Powell Sta. Maintenance

PROJECT TEAM

OWNER			ARCHITECT		CIVIL ENGINEER	STRUCTURAL ENGINEER	ELECTRICAL ENGINEER	MECHANICAL ENGINEER	LANDSCAPE ARCHITECT
PROJECT MANAGER	CONTRACTING OFFICER	FIELD REPRESENTATIVE	ARCHITECT OF RECORD	PROJECT MANAGER	PROJECT ENGINEER	PROJECT ENGINEER	PROJECT ENGINEER	PROJECT ENGINEER	PROJECT LANDSCAPE ARCHITECT
TONY PIRC Idaho Transportation Department 11331 W. Chinden Blvd., Bldg. 8 Boise, Idaho 83714 Email: tony.pirc@itd.idaho.gov Ph: (208) 334-8600	Travis Frei Idaho Transportation Department 11331 W. Chinden Blvd., Bldg. 8 Boise, Idaho 83714 Email: travis.frei@itd.idaho.gov Ph: (208) 334-8622	Bud Converse Idaho Transportation Department 2600 Frontage Rd. Lewiston, Idaho 83501 Email: bud.converse@itd.idaho.gov Ph: (208) 799-4276	MICHEAL WALKER Miller Stauffer Architects 601 E. Front Ave. Ste 201 Coeur d'Alene, Idaho 83814 Email: mike@millerstauffer.com Ph: (208) 664-1773	MARC NELSON Miller Stauffer Architects 601 E. Front Ave. Ste 201 Coeur d'Alene, Idaho 83814 Email: marcn@millerstauffer.com Ph: (208) 664-1773	MATT GIBB DCI Engineers 208 N. 4th St. Coeur d'Alene, Idaho 83814 Email: mgibb@dci-engineers.com Ph: (208) 820-1195	KELLY ANDERSON DCI Engineers 208 N. 4th St. Coeur d'Alene, Idaho 83814 Email: kandersen@dci-engineers.com Ph: (208) 820-1195	MATTHEW N. BRADLEY, P.E. MUSGROVE ENGINEERING, P.A. 645 W. 25th St. Idaho Falls, Idaho 83402 Email: mattb@musgrovepa.com Ph: (208) 523-2862	CHRIS DYKE, P.E. MUSGROVE ENGINEERING, P.A. 234 S. Whisperwood Way, Boise, Idaho 83709 toddn@musgrovepa.com Ph: (208) 384-0585	NOT APPLICABLE / NO LANDSCAPE SCOPE

PROJECT INFORMATION

Site Area:
640 Acres
27,878,400 Sq. Ft.

Proposed Building Area:
10,080 Sq. Ft.

Proposed Building Height:
+/- 35'-9"

Project Site Location:
Idaho County

Legal Description:
Parcel No.: 37N14E28
Lat / Longitude: 46.5213,-114.7015

BUILDING CODES

2018 International Building Code (IBC), with amendments
2018 International Energy Conservation Code (IECC)
2017 NEC with admendments
2018 International Mechanical Code (IMC)
2018 International Fuel Gas Code (IFGC)
2017 Idaho State Plumbing Code (ISPC)
2018 International Fire Code

PERMIT JURISDICTION

State of Idaho Division of Public Safety

PROJECT CODE INFORMATION

Minimum Design Criteria
Occupancy Risk Category: II
Wind Design:
- Wind Speed: Ultimate Design Wind Speed: 115
- Exposure Category: B
- Internal Pressure Coefficient: +/- 0.18
- Topographic Factor: 1.0

Seismic Design Category: C
Snow Load:
- Flat Roof Snow Load (PSF): 86
- Snow Drift Loading: Yes
- Snow Load Importance Factor: 1.0
- Ground Snow Load (PSF): 114
- Snow Exposure Factor: B
- Thermal Factor: 1.2

Design Soil Values:
- Allowable Foundation Bearing Pressure: 2500 psf
- Active Lateral Pressure (unrestrained): 30 psf / ft
- At-Rest Lateral Pressure (restrained): 35 psf / ft
- Coefficient of Sliding Friction: 0.45

Air Freezing Index: 1500
Weathering: Severe
Frost Depth: 30"

Code Analysis
Occupancy: S-2 (Low-Hazard Storage)
Mixed Occupancy: No
Sprinkler System: No
Construction Type: V-B (Combustible Non-Rated)
Allowable Height: 40'-0"
Allowable Stories: 2 Stories
Allowable Area:13,500 Sq. Ft.

Chapter 4 (Special Detailed Requirements)
- Section 402 - 405: No
- Section 406: Yes
- Section 407 - 428: No

Exterior Wall Seperation (X greater than 30'): 0 hrs
Occpuant Load:
- Warehouse (500 gross):
  - Refer to Egress Plan
- Parking Garage (200 Gross):
  - Refer to Egress Plan

Egress Path
- Spaces / Storeis with one Exit:
  - S: 29 Occupants
- Common Path: 100'-0" (OL≤30)

Exit Access Travel Distance: 300 ft.
Stairways:
- Minimum Width: 36" (OL≤50)
- Minimum Width: 44" (OL≥51)

Scope Narrative
The scope of the project is to construct a maintenance facility on the ITD Powell Campus. The land is owned by the US Forest Service, but is leased to the State of Idaho Transportation department. The structure is a single story facility that has 3 vehicle bays, an office area, and Vehicle wash. The scope includes site improvements imediately around the facility. Improvements to the site utilities is included in the project scope of work.

Copyright
Miller Stauffer Architects reserves all copyright rights to the ownership and use of these plans. The use of these plans is limited to the one time use by the owner for a specific project and for the construction of one building only. The use, re-use, or disclosure of said plans is strictly prohibited by copyright laws without the written consent of Miller Stauffer Architects.

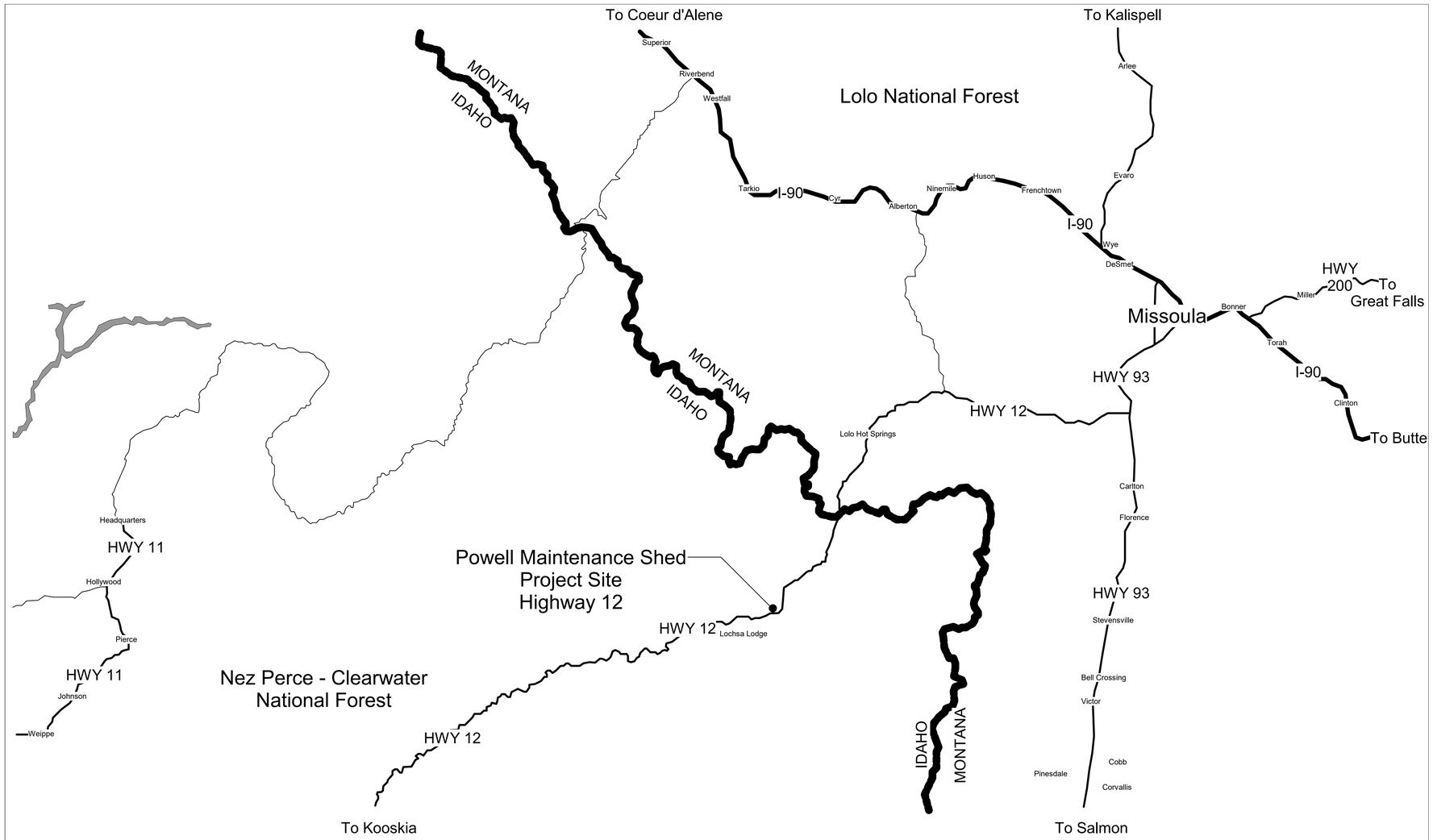

VICINITY MAP
12" = 1'-0"

ARCHITECTURAL SHEET INDEX

G1.0	Cover Sheet
G2.1	Egress Plan
G3.1	ADA Details
C0.0	General Civil
C0.1	General Notes
C1.0	Existing Site
C1.1	Erosion Control
C1.2	Grading Plan
C1.3	Storm Water Plan
C1.4	Utility Plan
C5.0	Details
C5.1	Details
C5.2	Details
A2.1	Floor Plan
A2.2	Reflected Ceiling Plan
A2.3	Roof Plan
A2.4	Enlarged Floor Plans
A2.5	Enlarged Floor Plan
A3.1	Exterior Elevations
A3.2	Exterior Elevations
A4.1	Building Sections
A4.2	Building Sections
A4.3	Building Sections
A5.1	Assemblies
A5.2	Storefront Elevations
A5.3	Door Schedule & Types
A5.4	Door Details
A5.5	Door & Window Details
A5.6	Exterior Details
A5.7	Exterior Details
A5.8	Interior Details
A6.1	Finish Plan
A7.1	Interior Elevations
A7.2	Interior Elevations
S1.1	General Notes
S1.2	General Notes
S1.3	General Notes
S1.4	Special Inspections
S2.1	Foundation Plan
S2.2	Roof Framing Plan
S3.1	Braced Framing Elevations
S4.1	Foundation Details
S4.2	Foundation Details
S4.3	Foundation Details
S4.4	Foundation Details
S5.1	Framing Details
S5.2	Framing Details
S5.3	Framing Details
S5.4	Framing Details
M0.0	Mechanical Cover Sheet
M1.0	Mechanical Floor Plan
~~M1.1~~	~~Mezzanine Mechanical Plan~~
M2.0	Mezzanine Mechanical Plan & Details
M2.1	Mechanical Details
M3.0	Mechanical Schedules
M3.1	Mechanical Schedules & Controls
P1.0	Plumbing Foundation Plan
P1.1	~~Mezzanine~~ Plumbing Plan
P2.0	Mezzanine Plumbing Plan & Details
P3.0	Plumbing Details & Schedules
E0.0	Electrical Cover Sheet
E0.1	Energy Code
E1.0	Lighting Plans
E2.0	Power Plans
E3.0	Mechanical Power Plan
E4.0	Special Systems Plan
E5.0	Electrical Details & Schedules
E5.1	Electrical Details
SD1.0	Schematic Data Plan

S5.5 - Framing Details
M0.1 - Mechanical Cover Sheet
M4.0 - Mechanical Controls
P2.1 - Plumbing Details
ES1.0 - Electrical Site Plan
E5.2 - Electrical Details

MILLER STAUFFER ARCHITECTS
601 E. FRONT AVE., STE 201
COEUR D' ALENE, IDAHO 83814
P 208.664.1773 F 208.667.3174
WWW.MILLERSTAUFFER.COM

Cover Sheet
Permit / Bid Set
2-17-2023

Powell Sta. Maintenance
Highway 12 @ Milepost 162.5
Powell Station, Idaho

LICENSED ARCHITECT
AR-984931
MICHEAL P. WALKER
STATE OF IDAHO

No.	Description	Date

PROJECT NUMBER 2206
PRINCIPAL MPW
PROJECT MANAGER MARC

G1.0

S:\ITD Powell Station\CD's\ITD Powell Station - Maintenance_Revision.rvt
3/24/2023 2:58:02 PM

CODE ANALYSIS

OCCUPANCY
STORAGES GROUP S (S-1)
BUSINESS GROUP (B)

PROPOSED AREA
STORAGES GROUP S (S-1) = 6059 SQ. FT.
BUSINESS GROUP (B) = 1711 SQ. FT.
TOTAL OCCUPIED AREA = 7770 SQ. FT.

CONSTRUCTION TYPE
COMBUSTIBLE - NON-RATED: TYPE V-B

ALLOWED AREA AREA
STORAGES GROUP S (S-1) = 9000 SQ. FT.
BUSINESS GROUP (B) = 9000 SQ. FT.

STORIES
MODERATE STORAGE (S-1) = 1 STORY
BUSINESS (B) = 2 STORY

HEIGHT
B = 40'-0"
S = 40'-0"

MIXED OCCUPANCY
B TO S-1: NO SEPERATION REQUIREMENT
6059 / 9000 = .6732
1711 / 9000 = .1901
TOTAL = 0.8633 LESS THAN 1

SPRINKLER SYSTEM
NO

FIRE RESISTANT RATING
PRIMARY STRUCTURAL FRAME = 0 HOURS
BEARING WALL
EXTERIOR = 0 HRS
INTERIOR = 0 HRS
NON-LOAD BEARING WALLS = 0HRS (GREATER THAN 30)
FLOOR = 0 HRS
ROOF = 0 HRS

EXTERIOR WALL OPENING
30 OR GREATER = NO LIMIT

Building Area Schedule (Gross)

001	B (Business) Occupancy	1711 SF
002	S-1 (Moderate Hazard Storage) Occupancy	6059 SF
003	Vehicle Mezzanine	461 SF
004	Mechanical Attic	202 SF
Square Footage Total		8433 SF

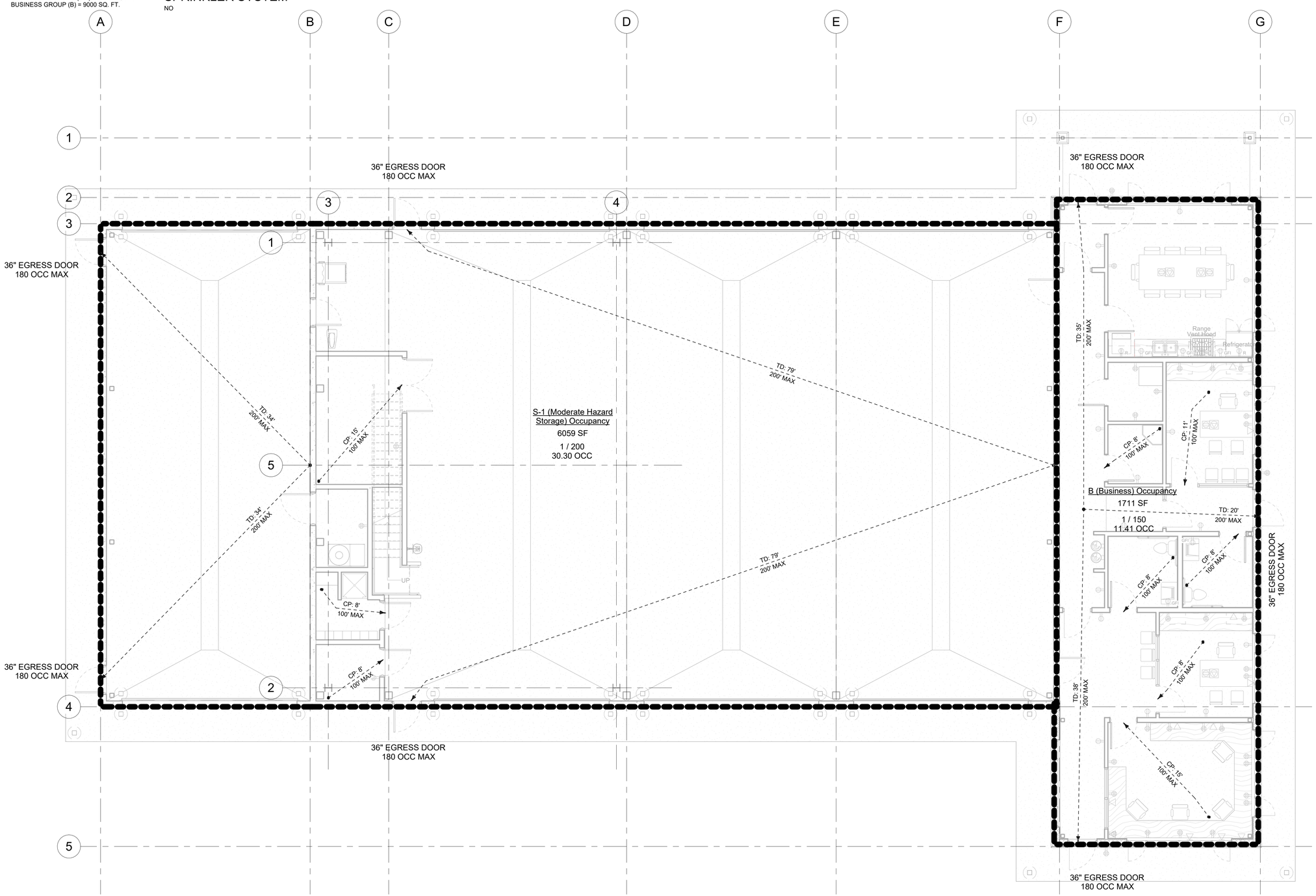

Egress Plan
3/16" = 1'-0"

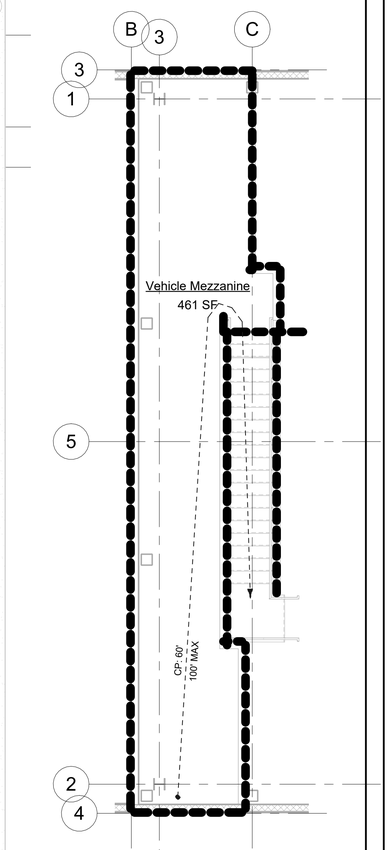

Vehicle Mezzanine Plan
3/16" = 1'-0"

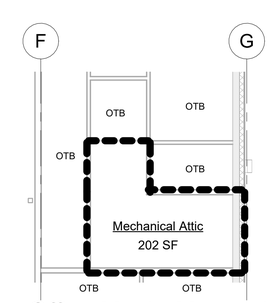

Office Mech. Mezzanine
1/8" = 1'-0"

MILLER STAUFFER ARCHITECTS
601 E. FRONT AVE. STE 201
COEUR D' ALENE, IDAHO 83814
P 208.664-1773 F 208.667.3174
WWW.MILLERSTAUFFER.COM

Egress Plan
Permit / Bid Set
2-17-2023

Powell Sta. Maintenance
Highway 12 @ Milepost 162.5
Powell Station, Idaho

LICENSED ARCHITECT
AR-984931
MICHEAL P. WALKER
STATE OF IDAHO

No.	Description	Date

PROJECT NUMBER 2206
PRINCIPAL Designer
PROJECT MANAGER Author

G2.1

S:\ITD Powell Station\CD's\ITD Powell Station - Maintenance.rvt
2/17/2023 11:39:29 AM

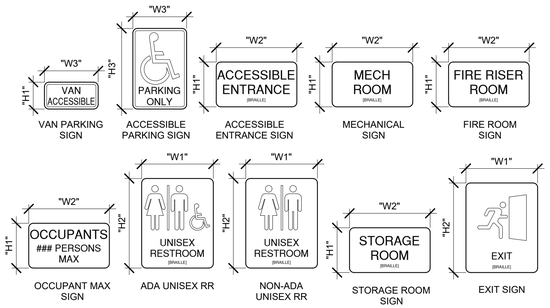

SIGN DIMENSIONS	
H1	6"
H2	8"
H3	9"
W1	6"
W2	8"
W3	9"

ADA Typical Signage
3/4" = 1'-0"

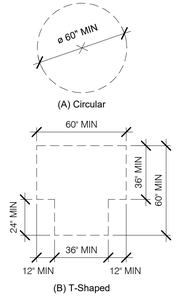

ADA_Turning Space
1/4" = 1'-0"

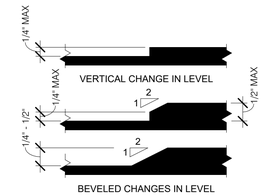

ADA_Level Changes
6" = 1'-0"

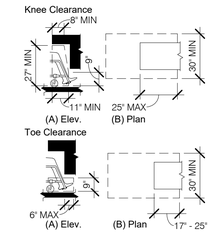

ADA_Knee/Toe Clearances
1/4" = 1'-0"

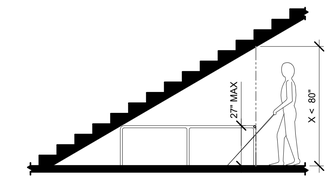

ADA_Reduced Vertical Clearance
1/4" = 1'-0"

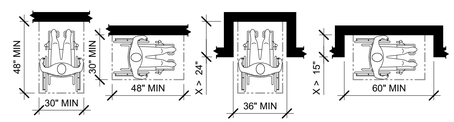

ADA_Clear Floor Space Position/Maneuvering
1/4" = 1'-0"

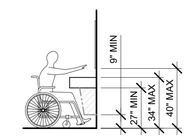

ADA_Lavatories
1/4" = 1'-0"

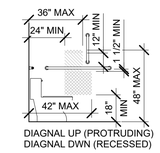

ADA_WC Dispensers
1/4" = 1'-0"

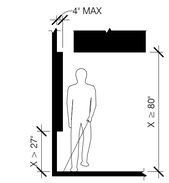

ADA_Protruding Objects
1/4" = 1'-0"

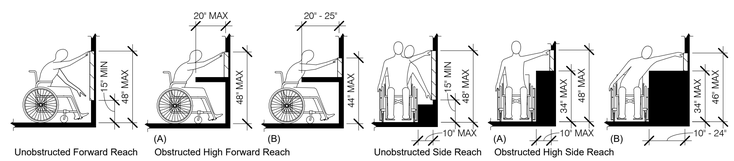

ADA_Reach Ranges
1/4" = 1'-0"

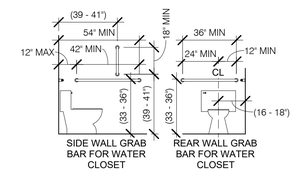

ADA_WC Grab Bars
1/4" = 1'-0"

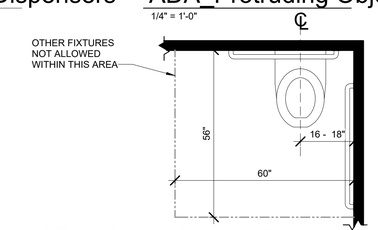

ADA_Water Closet Clearance
1/2" = 1'-0"

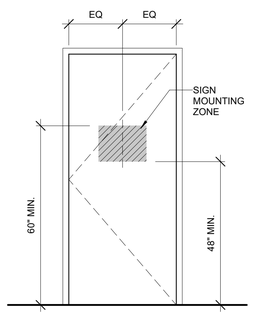

*CENTER SIGN IN 'SIGN MOUNTING ZONE', UNO.

ADA_Sign Door Mnt.
1/2" = 1'-0"

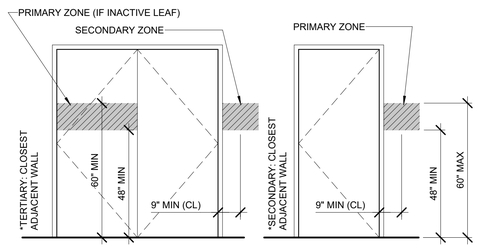

*NOTE: ZONES REPRESENT BASE OF RAISED CHARACTERS/BRAILLE ON SIGNAGE.

SIGN AT DBL. DOOR PLACEMENT

SIGN AT DOOR PLACEMENT

ADA Sign Locations
3/8" = 1'-0"

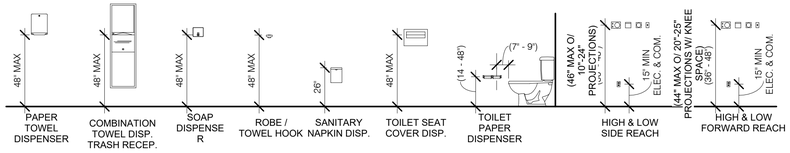

ADA_Mounting Heights
1/4" = 1'-0"

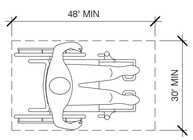

ADA_Clear Floor Space
1/2" = 1'-0"

ADA FIGURES
NOTE: SHOWN ONLY FOR REFERENCE
NOT ALL MAY BE USED.

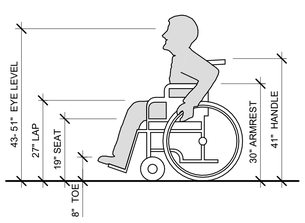

ADA_Adult Wheelchair Dimensions
1/2" = 1'-0"

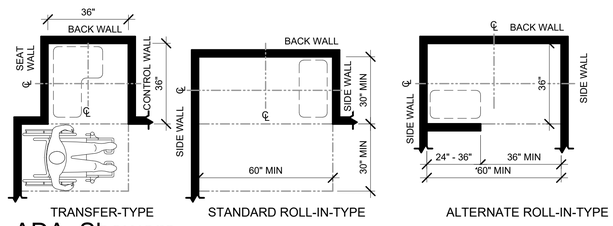

ADA_Showers
3/8" = 1'-0"

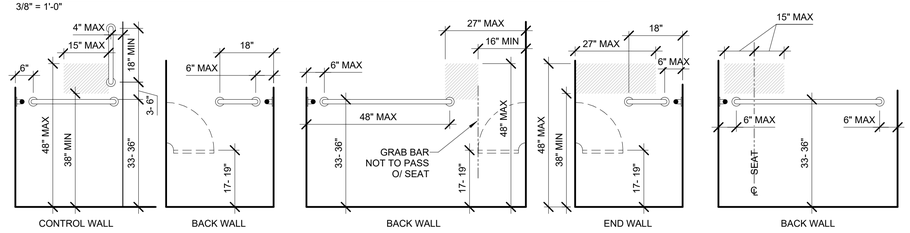

*NOTE: HATCHED ZONE DENOTES LOCATION FOR CONTROLS AND HANDSHOWER

ADA_Shower Grab Bars & Controls
1/2" = 1'-0"

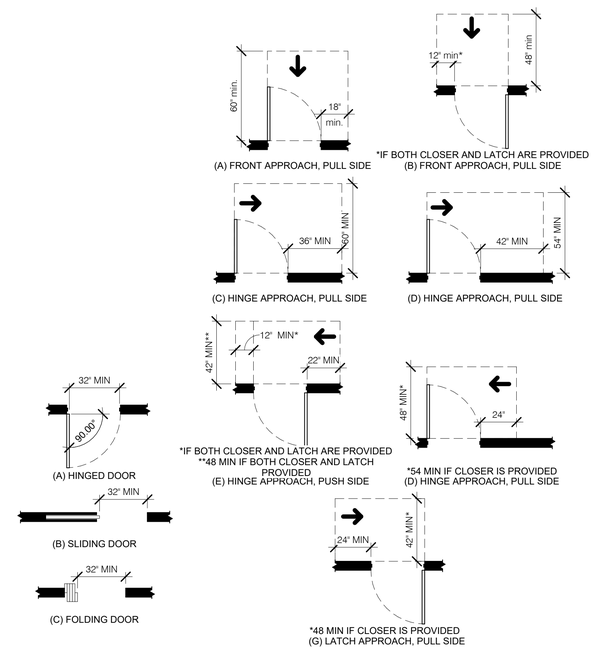

ADA_Doors
1/4" = 1'-0"

MILLER STAUFFER ARCHITECTS
601 E. FRONT AVE. STE 201
COEUR D' ALENE, IDAHO 83814
P 208.664-1773 F 208.667.3174
WWW.MILLERSTAUFFER.COM

ADA Details
Permit / Bid Set
2-17-2023

Powell Sta. Maintenance
Highway 12 @ Milepost 162.5
Powell Station, Idaho

LICENSED ARCHITECT AR-894931 MICHEAL P. WALKER STATE OF IDAHO

No.	Description	Date

PROJECT NUMBER 2206
PRINCIPAL Designer
PROJECT MANAGER Author

G3.1

S:\ITD Powell Station\CD's\ITD Powell Station - Maintenance.rvt
2/17/2023 11:39:31 AM

ITD POWELL STATION - PHASE 1
EQUIP. SHED WATER

112 LOCHSA ROAD
IDAHO COUNTY, IDAHO

ABBREVIATIONS

ACP	ASPHALT CONCRETE PAVEMENT
ADD'L	ADDITIONAL
AD	AREA DRAIN
ADJ	ADJACENT
ANSI	AMERICAN NATIONAL STANDARDS INSTITUTE
APPROX.	APPROXIMATE(LY)
ARCH	ARCHITECT(URAL)
ASSY	ASSEMBLY
BLDG	BUILDING
BM	BENCHMARK
BNDRY	BOUNDARY
BOW	BOTTOM OF WALL (AT FINISHED GRADE)
BVC	BEGINNING OF VERTICAL CURVE
CTV	CABLE TV
C&G	CURB AND GUTTER
CB	CATCH BASIN
CC	CURB CUT
CD	CONCRETE DRIVE
CF	CUBIC FEET (FOOT)
CI	CAST IRON
CJ	CONSTRUCTION JOINT
CL	CLASS
CL	CENTER LINE
CMP	CORRUGATED METAL PIPE
CONC.	CONCRETE
CONST.	CONSTRUCTION
CPEP	CORRUGATED POLYETHYLENE PIPE
CTR	CENTER(ED)
CY	CUBIC YARD
DCVA	DOUBLE CHECK VALVE ASSEMBLY
DDCV	DOUBLE DETECTOR CHECK VALVE
DEPT.	DEPARTMENT
DET	DETAIL
D.I.	DUCTILE IRON
DIA (ø)	DIAMETER
DIM	DIMENSION
DS	DOWN SPOUT
DWG	DRAWING
E	EAST(ING)
EC	ELECTRICAL CONDUIT
ECC	EXTRUDED CONCRETE CURB
EL.=	ELEVATION
EOP	EDGE OF PAVEMENT
EQUIV.	EQUIVALENT
EVC	END OF VERTICAL CURVE
EXIST.	EXISTING
FD	FLOOR DRAIN
FDC	FIRE DEPARTMENT CONNECTION
FDN	FOUNDATION
FFE	FINISH FLOOR ELEVATION
FH	FIRE HYDRANT
FL	FLANGED
FLR	FLOOR
FOC	FACE OF CURB
F.S.	FINISHED SURFACE

FT (')	FOOT (FEET)
FTG	FOOTING
G	GAS MAIN
GB	GRADE BREAK
GM	GAS METER
GRD	GRADE
GV	GATE VALVE
HB	HOSE BIB
HDPE	HIGH DENSITY POLYETHYLENE
HORIZ(H)	HORIZONTAL
HT	HEIGHT
HYD	HYDRANT
ID	INSIDE DIAMETER
I.E.	INVERT ELEVATION
IN (")	INCH(ES)
INV	INVERT
IRR	IRRIGATION WATER
LB	POUND(S)
LCPE	LINED CORRUGATED POLYETHYLENE PIPE
LF	LINEAR FEET
MAT'L	MATERIAL
MAX	MAXIMUM
MFR	MANUFACTURER
MH	MANHOLE
MJ	MECHANICAL JOINT
MIN.	MINIMUM
MISC.	MISCELLANEOUS
N	NORTH(ING)
NO (#)	NUMBER
OC	ON CENTER
O/W	OIL WATER
P	POWER
PC	POINT OF CURVATURE
PIV	POST INDICATOR VALVE
PP	POWER POLE
PL	PROPERTY LINE
PSF	POUNDS PER SQUARE FOOT
PSI	POUNDS PER SQUARE INCH
PT	POINT OF TANGENCY
PVC	POLYVINYL CHLORIDE
PVI	POINT OF VERTICAL INFLECTION
QTY.	QUANTITY
RAD (R)	RADIUS
RCP	REINFORCED CONCRETE PIPE
RD	ROAD
REF	REFERENCE
REQD.	REQUIRED
RET	RETAINING
ROW	RIGHT OF WAY
SD	STORM DRAIN
S.F.	SQUARE FEET
SHT	SHEET
SIM	SIMILAR
SPEC	SPECIFICATION(S)
SQ	SQUARE
SS	SANITARY SEWER
STA	STATION
STD	STANDARD
TOE	TOE OF WALL, OR SLOPE
T	TELEPHONE WIRE
TBM	TEMPORARY BENCH MARK
T.C.	TOP OF CURB
TG OR RIM	TOP OF GRATE
TEMP.	TEMPORARY
TOP	TOP OF SLOPE
TOW	TOP OF WALL
TV	TELEVISION WIRE
TYP.	TYPICAL
VC	VERTICAL CURVE
VERT (V)	VERTICAL
WM	WATER METER
W/	WITH
WT	WEIGHT
WWF	WELDED WIRE FABRIC
YD	YARD DRAIN

LEGEND

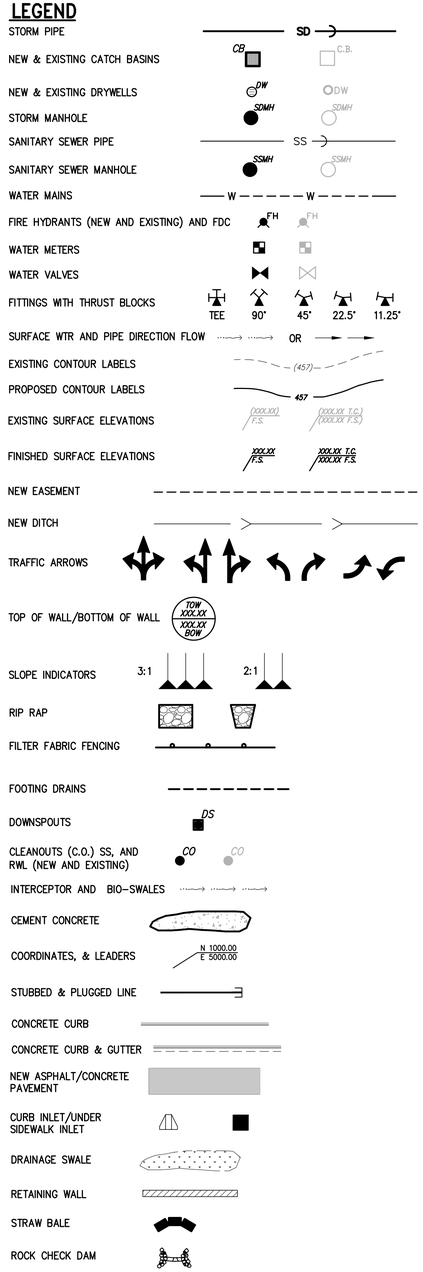

GENERAL CONSTRUCTION NOTES:

1. ALL WORK SHALL CONFORM TO THE STATE OF IDAHO DIVISION OF BUILDING SAFETY, AND THE IDAHO TRANSPORTATION DEPARTMENT (ITD) STANDARD DRAWINGS AND SPECIFICATIONS. IN THE CASE OF CONFLICT, THE MOST STRINGENT STANDARD SHALL APPLY.

2. NO REVISIONS SHALL BE MADE TO THESE DRAWINGS WITHOUT THE APPROVAL OF THE OWNER, ARCHITECT, AND CIVIL ENGINEER. ALL PROPOSED REVISIONS SHALL BE SUBMITTED TO ARCHITECT AND CIVIL ENGINEER.

3. NO REVISIONS SHALL BE MADE TO THE ITD STANDARD DRAWINGS OR NOTES WITHOUT WRITTEN APPROVAL OF THE ITD ENGINEER. REVISIONS OF ITD STANDARD DRAWINGS SHALL BE CLEARLY IDENTIFIED UPON THE APPROVED DRAWINGS; REVISIONS OR ADDITIONS TO STANDARD NOTES SHALL BE PROVIDED ONLY WITHIN THE SUPPLEMENTAL NOTES.

4. ALL SAFETY STANDARDS AND REQUIREMENTS SHALL BE THE RESPONSIBILITY OF THE CONTRACTOR AND COMPLIED WITH AS SET FORTH BY OSHA.

5. EXISTING UTILITIES SHALL BE LOCATED BY CONTACTING CALL BEFORE YOU DIG AT 811, AT LEAST 48 HOURS PRIOR TO STARTING ANY EXCAVATIONS. THE CONTRACTOR SHALL NOTIFY THE APPROPRIATE UTILITY COMPANIES PRIOR TO STARTING WORK NEAR ANY FACILITIES AND SHALL COORDINATE THEIR WORK WITH COMPANY REPRESENTATIVES.

6. THE CONTRACTOR SHALL NOTIFY THE ARCHITECT AT LEAST 48 HOURS PRIOR TO STARTING WORK OR PROCEEDING WITH NEW PHASES OF CONSTRUCTION. ALL INSPECTIONS SHALL BE SCHEDULED WITH A MINIMUM 24-HOUR NOTICE PRIOR TO TESTING.

7. AN APPROVED SET OF IMPROVEMENT PLANS SHALL BE KEPT ON THE JOB SITE AT ALL TIMES.

8. THE CONTRACTOR SHALL MAINTAIN THE STREETS, SIDEWALKS, AND ALL OTHER PUBLIC RIGHTS-OF-WAY IN A CLEAN, SAFE AND USEABLE CONDITION. ALL SOIL, ROCK, OR CONSTRUCTION DEBRIS SHALL BE PROMPTLY REMOVED FROM THE PUBLICLY OWNED PROPERTY DURING CONSTRUCTION, AND UPON COMPLETION OF THE PROJECT. ALL ADJACENT PROPERTY; PRIVATE OR PUBLIC, SHALL BE MAINTAINED IN A CLEAN, SAFE AND USEABLE CONDITION.

9. EXISTING PROPERTY CORNERS OR SURVEY MONUMENTS SHALL BE PROTECTED DURING THE COURSE OF CONSTRUCTION. ANY DAMAGED OR OBLITERATED CORNERS OR MONUMENTS SHALL BE RE-ESTABLISHED BY PROFESSIONAL SURVEYORS, LICENSED TO WORK IN THE STATE OF IDAHO, PRIOR TO FINAL ACCEPTANCE.

10. TREES NOT IDENTIFIED FOR REMOVAL SHALL BE PRESERVED OR PROTECTED IN AN APPROVED MANOR PRIOR TO COMMENCEMENT OF GRADING OPERATIONS.

11. THE ENGINEER OF RECORD SHALL VERIFY THE ADEQUACY OF EROSION AND SEDIMENTATION CONTROL MEASURES PRIOR TO THE START OF CONSTRUCTION, AND AS NECESSARY DURING THE COURSE OF THE PROJECT. EROSION AND SEDIMENTATION CONTROL MEASURES SHALL BE INSTALLED IN ACCORDANCE WITH THESE PLANS, AND THE "CATALOG OF STORM WATER BEST MANAGEMENT PRACTICES FOR IDAHO CITIES AND COUNTIES" AS PREPARED BY THE IDAHO DIVISION OF ENVIRONMENTAL QUALITY.

12. ALL PROJECTS HAVING THE POTENTIAL FOR RUNOFF DISCHARGE TO ANY SURFACE WATER BODY; SHALL FILE A NOTICE OF INTENT (NOI), WITH THE EPA. COPIES OF ANY REQUIRED STORM WATER POLLUTION PREVENTION PLANS (SWPPP) OR NOI SHALL BE PROVIDED TO THE ITD PRIOR TO START OF CONSTRUCTION.

13. ALL CONCRETE, UNLESS OTHERWISE SPECIFIED, SHALL BE COMMERCIAL GRADE PORTLAND CEMENT WITH AIR ENTRAINMENT (6.5% ±1.5%), AND A MINIMUM 28-DAY COMPRESSIVE STRENGTH OF 4500 PSI.

14. ALL UNDERGROUND UTILITY LATERALS SHALL BE INSTALLED AND APPROVED BEFORE CONSTRUCTION OF CURBS, CROSS GUTTERS, SIDEWALKS OR THE SURFACING OF STREETS.

15. ALL TRENCHES AND ROADWAY CUTS WITHIN PUBLIC EASEMENTS OR RIGHTS-OF-WAY SHALL BE COMPACTED IN ACCORDANCE WITH ISPWC. COMPACTION TEST RESULTS SHALL BE CERTIFIED BY THE ENGINEER OF RECORD AND SUBMITTED TO THE OWNER FOR APPROVAL PRIOR TO ANY PAVING AND FINAL ACCEPTANCE OF WORK.

16. ALL OPERATIONS CONDUCTED ON THE PREMISES SHALL BE RESTRICTED TO THE HOURS BETWEEN 6:00 A.M. AND 10:00 P.M., UNLESS OTHERWISE APPROVED BY ITD. THIS INCLUDES THE WARMING UP, REPAIR, ARRIVAL, DEPARTURE OR RUNNING OF TRUCKS, EARTHMOVING EQUIPMENT, CONSTRUCTION EQUIPMENT OR ANY OTHER ASSOCIATED EQUIPMENT.

17. ALL IMPROVEMENTS SHALL BE JOINED OR MATCHED IN A MANNER SATISFACTORY TO THE OWNER. THIS INCLUDES ALL UTILITY CONNECTIONS AND NECESSARY SAW CUTTING, REMOVAL, REPLACEMENT, EXTENSION, AND CAPPING ASSOCIATED WITH CURB AND GUTTER, SIDEWALKS, SWALES, ASPHALT, CONCRETE OR OTHER PAVING.

18. THE CONTRACTOR SHALL BE RESPONSIBLE FOR ALL TRAFFIC CONTROL, IN ACCORDANCE WITH THE M.U.T.C.D., CURRENT EDITION. AT LEAST 48 HOURS PRIOR TO DISRUPTION OF ANY TRAFFIC, TRAFFIC CONTROL PLANS SHALL BE PREPARED AND SUBMITTED TO THE OWNER FOR APPROVAL. NO WORK SHALL COMMENCE UNTIL A PERMIT IS ISSUED AND ALL APPROVED TRAFFIC CONTROL IS IN PLACE.

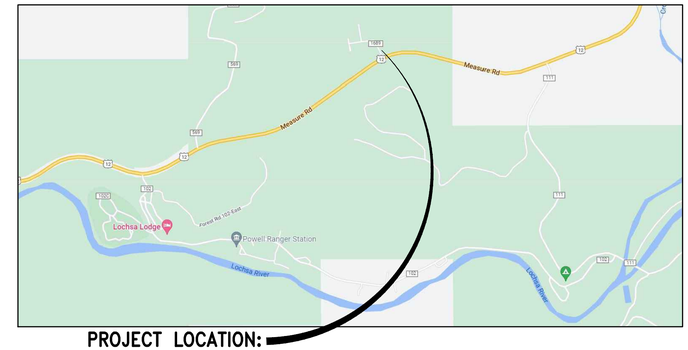

PROJECT LOCATION:
112 LOCHSA ROAD

VICINITY MAP

NOT TO SCALE

PROJECT TEAM:

OWNER:
IDAHO TRANSPORTATION DEPARTMENT
11331 W. CHINDEN BLVD.
BOISE, IDAHO 83714
CONTACT: TBD
PHONE: (208) 772-1200

ARCHITECT:
MILLER STAUFFER ARCHITECTS
601 E. FRONT AVENUE SUITE 201
COEUR D'ALENE, IDAHO 83814
CONTACT: MIKE WALKER
PHONE: (208) 664-1773

CONTRACTOR:
BENITON CONSTRUCTION COMPANY
389 SW. 5TH AVENUE
MERIDIAN, ID 83642
CONTACT: ALAN UHLORN
PHONE: (208) 884-0027

CIVIL ENGINEER:
DCI ENGINEERS
707 W. 2ND AVENUE
SPOKANE, WASHINGTON 99201
CONTACT: MATT GIBB P.E.
PHONE: (509) 227-5721

UTILITY PURVEYORS:

POWER:
MISSOULA ELECTRIC COOPERATIVE, INC.
1700 W BROADWAY STREET
MISSOULA, MT 59808
CONTACT: TBD
PHONE: (406) 541-4433

FIRE:
MISSOULA RURAL FIRE DISTRICT STATION #5
12221 US-93
LOLO, MONTANA 59847
CONTACT: TBD
PHONE: (408) 549-6172

SW 1/4 OF NE 1/4 OF SEC. 28., T. 37 N., R. 14 E., B.M.

SHEET INDEX

SHEET #	SHEET TITLE
C0.0	GENERAL CIVIL INFORMATION
C0.1	GENERAL NOTES
C1.0	EXISTING SITE CONDITIONS
C1.1	EROSION CONTROL PLAN
C1.2	GRADING PLAN
C1.3	STORM WATER PLAN
C1.4	UTILITY PLAN
C5.0	DETAILS
C5.1	DETAILS
C5.2	DETAILS

FOR PERMIT

THESE DRAWINGS ARE SUFFICIENTLY COMPLETE FOR SUBMISSION TO THE JURISDICTION HAVING AUTHORITY FOR PERMIT. THE CONTRACTOR SHALL NOT USE THESE DRAWINGS FOR CONSTRUCTION UNTIL THE CONTRACTOR RECEIVES WRITTEN APPROVAL FOR USE IN CONSTRUCTION BY THE JURISDICTION HAVING AUTHORITY AND DCI ENGINEERS.

CONTRACTOR NOTE

ALL EXISTING UTILITIES SHOWN ON PLANS ARE TO BE VERIFIED HORIZONTALLY AND VERTICALLY PRIOR TO ANY CONSTRUCTION. ALL EXISTING FEATURES INCLUDING BURIED UTILITIES ARE SHOWN AS INDICATED ON RECORD MAPS AND SURVEYS FURNISHED BY OTHERS. WE ASSUME NO LIABILITY FOR THE ACCURACY OF THOSE RECORDS AND SURVEYS. CONTACT THE UTILITY OWNER/AGENCY FOR THE FINAL LOCATION OF EXISTING UTILITIES IN AREAS CRITICAL TO CONSTRUCTION.

UNDERGROUND SERVICE ALERT
ONE-CALL NUMBER
811
CALL TWO BUSINESS DAYS BEFORE YOU DIG

MILLER STAUFFER ARCHITECTS
601 E. Front Ave., Suite 201
Coeur d'Alene, ID 83814
P 208.664.1773 F 208.667.3174
www.millerstauffer.com

GENERAL CIVIL INFORMATION
2-17-2023

PROFESSIONAL ENGINEER — LICENSED — 17233 — STATE OF IDAHO — MATTHEW R. GIBB — 2/17/2023

ITD Powell Station - Phase 1
Equip. Shed Water
112 Lochsa Road, Idaho County, Idaho

#	DATE	DESCRIPTION
1	2/16/2023	ITD SUBMITTAL

22042-0073
EAJ
JSS
C0.0

GENERAL EROSION AND SEDIMENT CONTROL NOTES:

1. AN EROSION AND SEDIMENTATION CONTROL (ESC) PLAN IS REQUIRED FOR THIS PROJECT. IMPLEMENTATION OF THE ESC PLAN, AND CONSTRUCTION, MAINTENANCE, AND UPGRADING OF THE ESC FACILITIES ARE THE RESPONSIBILITY OF THE CONTRACTOR UNTIL ALL CONSTRUCTION IS COMPLETED AND ACCEPTED BY ITD, OR UNTIL VEGETATION IS ESTABLISHED THROUGHOUT THE SITE, AND ACCEPTED BY THE ITD, WHICHEVER IS LATER.

2. APPROVAL OF THE ESC PLAN DOES NOT CONSTITUTE APPROVAL OF ANY OF THE PROPOSED ROAD, STORM WATER, GRADING OR UTILITY DESIGN ELEMENTS SHOWN ON THE ESC PLAN.

3. THE EROSION/SEDIMENTATION CONTROL MEASURES SHOWN ARE THE MINIMUM REQUIREMENTS OF THE ANTICIPATED SITE CONDITIONS. THE CONTRACTOR SHALL INSPECT AND MAINTAIN THESE ESC MEASURES DAILY, AND SHALL MAINTAIN AND UPGRADE THESE MEASURES AS NECESSARY TO PREVENT SEDIMENT-LADEN WATER FROM EITHER FLOWING OFF-SITE, OR INTO NEW/EXISTING STORM WATER FACILITIES, SUCH AS DRYWELLS, CULVERTS, OR GRAVEL GALLERIES.

4. CONTRACTOR IS RESPONSIBLE FOR INSTALLING A ROCK CONSTRUCTION ENTRANCE AT ANY AND ALL LOCATIONS USED TO ENTER OR EXIT THE PROJECT SITE TO PREVENT SEDIMENTS FROM BEING TRACKED OFF THE SITE BY CONSTRUCTION TRAFFIC.

5. ANY DISTURBED AREAS, EXCEPT FOR POND BOTTOMS AND SLOPES, THAT WILL BE LEFT BARE FOR MORE THAN 7 DAYS AND ARE NOT INTENDED TO BE REWORKED WITHIN 30-45 DAYS, SHALL BE SEEDED WITH A FAST STARTING NATIVE DRYLAND GRASS SUCH AS ANNUAL RYE, OR APPROVED EQUAL, AT A RATE OF 60 LBS./ACRE.

6. GRADED POND AREAS, THAT WILL BE LEFT BARE FOR MORE THAN 7 DAYS, SHALL HAVE A MULCH APPLIED AT A RATE OF TWO THOUSAND (2,000) POUNDS PER ACRE. MULCH SHALL BE A VIRGIN WOOD CELLULOSE FIBER SPECIALLY PROCESSED AS A HYDROSEEDING MULCH AND CONTAIN NO GROWTH OR GERMINATION INHIBITING FACTORS. IF POND CONSTRUCTION HAS BEEN COMPLETED, INCLUDING DRAINAGE STRUCTURES, AND HAVE RECEIVED FINAL INSPECTION APPROVAL, THEY SHALL BE GRASS SEEDED.

7. DUST CONTROL: AN APPROVED METHOD OF DUST CONTROL, MEETING THE REQUIREMENTS OF STATE AND LOCAL REGULATIONS, SHALL BE UTILIZED DURING CONSTRUCTION OF THIS PROJECT.

8. THE CONTRACTOR SHALL BE RESPONSIBLE FOR ANY MATERIALS THAT SPILL ONTO LOCAL STREETS DURING THE TRANSPORTATION OF EQUIPMENT. SHOULD A SPILL OCCUR, THE CONTRACTOR SHALL REMOVE THE MATERIAL BY THE END OF THE WORK DAY. NO MATERIAL SHALL BE ALLOWED TO SET, DRY, OR BE WASHED INTO ADJACENT STORM WATER FACILITIES.

9. GEOTEXTILE FABRIC SHALL BE PLACED ON THE RIMS OF ALL DRYWELLS, CATCH BASINS, AND INLETS UNTIL SUCH TIME AS THE VEGETATION ON THE SITE IS ESTABLISHED AND THE THREAT OF SEDIMENT DEPOSITION INTO THE DRAINAGE SYSTEM IS MITIGATED. DRAINAGE STRUCTURES LOCATED IN PAVEMENT CAN HAVE THE FILTER FABRIC REMOVED ONCE FINAL PAVEMENT HAS BEEN COMPLETED AND CLEANED.

10. THE CONTRACTOR SHALL PROTECT ALL CATCH BASINS, DRYWELLS, AND OTHER STORM WATER STRUCTURES FROM BEING CONTAMINATED WITH SILT BY INSTALLING FILTER FABRIC OVER THE METAL FRAME DURING CONSTRUCTION AND KEEPING IT IN PLACE UNTIL THE SITE/STREET HAS BEEN PAVED AND CLEANED.

11. ALL PONDS/SWALES SHALL BE GRASS SEEDED.

12. CONTRACTOR SHALL INSTALL FILTER FABRIC FENCE AS NEEDED ON-SITE TO PREVENT SEDIMENTS FROM LEAVING THE SITE.

EROSION CONTROL MAINTENANCE NOTES:

1. SEDIMENT BARRIERS SHALL BE INSPECTED IMMEDIATELY AFTER EACH RAINFALL PRODUCING RUNOFF AND AT LEAST DAILY DURING PROLONGED RAINFALL OF 24 CONTINUOUS HOURS OR 48 HOURS IN ANY ONE WEEK.

2. NECESSARY REPAIRS TO BARRIERS OR REPLACEMENT OF BARRIERS SHALL BE ACCOMPLISHED PROMPTLY.

3. SEDIMENT MUST BE REMOVED WHEN IT REACHES A HEIGHT OF 6 INCHES UP THE BASE OF THE FILTER FABRIC BARRIER, THE DEPTH OF THE CUTOFF DITCH, OR THE SEDIMENT POND. ALL EROSION CONTROL SHALL BE CHECKED AFTER ANY RAIN STORM.

4. ANY SEDIMENT DEPOSITS REMAINING IN PLACE AFTER THE ESC STRUCTURE IS NO LONGER REQUIRED SHALL BE DRESSED TO CONFORM TO THE EXISTING GRADE, PREPARED, AND HYDRO/HAND SEEDED OR SODDED.

5. ALL TEMPORARY AND PERMANENT ESC PRACTICES SHALL BE MAINTAINED AND PREPARED AS NEEDED TO ASSURE CONTINUED PERFORMANCE OF THEIR INTENDED FUNCTION.

6. ALL TEMPORARY ESC MEASURES SHALL BE REMOVED WITHIN 30 DAYS AFTER FINAL SITE STABILIZATION IS ACHIEVED OR AFTER THE TEMPORARY BMP'S ARE NO LONGER NEEDED. TRAPPED SEDIMENT SHALL BE REMOVED OR STABILIZED ON-SITE. DISTURBED SOIL AREAS RESULTING FROM REMOVAL WITHOUT PERMISSION OF THE ENGINEER OR INSPECTOR THAT RESULTS IN CONTAMINATION OF THE DRYWELLS SHALL BE THE CONTRACTOR'S SOLE RESPONSIBILITY TO REMEDY. REMEDY MAY ENTAIL DRYWELL CLEANING OR REMOVAL AND RECONSTRUCTION.

7. ROADWAYS ADJACENT TO THE CONSTRUCTION SITE SHALL BE INSPECTED DAILY. CLEANING IS REQUIRED IF SEDIMENT HAS BEEN TRACKED OFF-SITE AND/OR BEYOND THE ROADWAY APPROACH.

8. STREET WASHING IS REQUIRED TO CLEAN SEDIMENT TRACKED OFF-SITE. STREET WASH WASTEWATER SHALL BE CONTROLLED BY PUMPING BACK ON-SITE OR OTHERWISE PREVENTED FROM DISCHARGING INTO A STORM SYSTEM. IF NECESSARY, SEDIMENT SHALL BE REMOVED BY SHOVELING OR PICKUP SWEEPING PRIOR TO STREET WASHING.

9. CONSTRUCT STORM WATER CONTROL FACILITIES (STORAGE PONDS, SWALES, ETC.) BEFORE GRADING BEGINS. THESE FACILITIES SHALL BE OPERATIONAL BEFORE THE CONSTRUCTION OF IMPERVIOUS SITE IMPROVEMENTS.

10. STOCKPILE MATERIALS SUCH AS TOPSOIL ON SITE, KEEPING OFF OF ROADWAY AND SIDEWALKS.

11. COVER, CONTAIN, AND PROTECT ALL CHEMICALS, LIQUID PRODUCTS, PETROLEUM PRODUCTS, AND NON-INERT WASTES PRESENT ON-SITE FROM VANDALISM. USE SECONDARY CONTAINMENT FOR ONSITE FUELING TANKS.

12. CONDUCT MAINTENANCE AND REPAIR OF HEAVY EQUIPMENT AND VEHICLES INVOLVING OIL CHANGES, HYDRAULIC SYSTEM REPAIRS, SOLVENT AND DE-GREASING OPERATIONS, FUEL TANK DRAIN DOWN AND REMOVAL, AND OTHER ACTIVITIES THAT MAY RESULT IN DISCHARGE OR SPILLAGE OF POLLUTANTS TO THE GROUND OR INTO STORM WATER RUNOFF USING SPILL PREVENTION MEASURES, SUCH AS DRIP PANS. CLEAN ALL CONTAMINATED SURFACES IMMEDIATELY FOLLOWING ANY DISCHARGE OR SPILL INCIDENT. IF RAINING OVER EQUIPMENT OR VEHICLE, PERFORM EMERGENCY REPAIRS ON SITE USING TEMPORARY PLASTIC BENEATH THE VEHICLE.

13. THE CONTRACTOR IS REQUIRED TO KEEP AN UPDATED COPY OF THE TESC PLAN ON-SITE.

14. THE CONTRACTOR IS RESPONSIBLE FOR DESIGNATING A LOCATION WHERE CONCRETE TRUCK AND EQUIPMENT CAN BE WASHED OUT. THIS AREA SHALL NOT BE LOCATED NEAR OR DRAINING INTO A STORM DRAINAGE AREA, TREATMENT AREA, OR FACILITY.

PAVING NOTES:

1. ALL CONSTRUCTION SHALL BE DONE IN ACCORDANCE WITH THE ITD STANDARD DRAWINGS AND SPECIFICATIONS (LATEST EDITION) AND THE IDAHO STANDARDS FOR PUBLIC WORKS CONSTRUCTION (LATEST EDITION).

2. CONTRACTOR SHALL CONTACT ALL APPROPRIATE UTILITY COMPANIES AND THE ITD TO OBTAIN NECESSARY LOCATES 48 HOURS BEFORE CONSTRUCTION BEGINS.

3. NO VARIANCE FROM THE SPECIFICATIONS AND NOTES SHALL BE ACCEPTED WITHOUT PRIOR WRITTEN APPROVAL FROM THE ITD AND/OR THE ENGINEER.

4. ALL EXISTING PAVEMENT SHALL BE REMOVED IN THE SECTIONS REQUIRING REMOVAL AND REPLACEMENT. THE EXISTING BASE COURSE MATERIALS IN THESE SECTIONS SHALL BE COMPACTED TO A MINIMUM OF 95% OF MODIFIED PROCTOR DRY DENSITY @ +/-95% OF THE OPTIMUM MOISTURE CONTENT. ALL COMPACTION SHALL BE DONE IN ACCORDANCE WITH ASTM D-1557. THE NEW PAVEMENT SHALL BE REPLACED TO A DEPTH OF THE PAVEMENT DETAIL SHOWN ON THESE PLANS.

5. ASPHALT/CONCRETE PAVING SHALL CONFORM TO ITD STANDARD SPECIFICATIONS (CURRENT EDITION). ON-SITE ASPHALT PAVED AREAS SHALL BE A MINIMUM OF 4 INCHES OF ASPHALT/CONCRETE PAVEMENT PLACED OVER A MINIMUM OF 9 INCHES OF FREE-DRAINING, COMPACT, GRANULAR BASE MATERIAL.

6. ALL AREAS TO BE PAVED SHALL BE CLEARED OF ALL GRASS, ROOTS, TRASH, METAL AND ORGANIC MATERIALS DOWN TO FULL DEPTH BELOW THE PAVING MAT. THE EXPOSED SURFACE SHOULD THEN BE PROOF ROLLED TO 95% OF MAXIMUM COMPACTION AS DETERMINED BY ASTM D-1557 USING A MECHANICAL VIBRATORY COMPACTOR. ANY BACK FILL MATERIAL SHOULD BE SIMILARLY COMPACTED.

7. BEFORE PLACING THE BASE MATERIAL, THE SURFACE OF THE SUBGRADE SHALL BE COMPACTED TO 95% OF MAXIMUM DENSITY AS DETERMINED BY ASTM D-1557. THE GRANULAR BASE MATERIAL SHALL BE PLACED IN LAYERS NOT EXCEEDING 3 INCHES IN THICKNESS AND COMPACTED TO 95% OF MAXIMUM DENSITY AS DETERMINED BY ASTM D-1557.

8. BITUMINOUS TACK COAT SHALL BE APPLIED BETWEEN ASPHALT PAVING LIFTS AND SHALL BE USED PRIOR TO OVERLAY, (CSS-1H), 50:50 DILUTION, 0.05 GAL/SY TO 0.15 GAL/SY OR AS DIRECTED BY THE ENGINEER. ALL EDGES ABUTTING NEW PAVEMENT SHALL BE TACKED.

9. TESTS SHALL BE CONDUCTED AT 100 FOOT INTERVALS OR 1 PER 3000 SQUARE FEET FOR EACH LIFT OR AS DIRECTED BY THE ENGINEER. ALL TEST REPORTS SHALL BE SUBMITTED TO THE OWNER PRIOR TO PROOF ROLLS. SINGLE-AXLE 5-TON TRUCK PROOF ROLLS MONITORED BY THE OWNER'S INSPECTOR PRIOR TO PLACEMENT OF ROAD/PARKING LOT BASE AND ASPHALT ARE REQUIRED. CONCRETE AND ASPHALT TESTING SHALL BE AS DIRECTED BY THE OWNER'S INSPECTOR.

10. ALL VALVE AND MANHOLE COVERS SHALL BE ADJUSTED TO PAVEMENT GRADE DURING INITIAL CONSTRUCTION.

11. ALL CONCRETE EDGES MUST BE ROUNDED TO A 1/4 INCH RADIUS, EXCEPT WHERE SHOWN OTHERWISE ON DRAWINGS. ALL ASPHALT SHALL BE 1/4 INCH ABOVE CONCRETE EDGES, MANHOLES, AND VALVES.

12. HALF-INCH EXPANSION JOINTS SHALL BE INSTALLED AT PROPERTY LINES; HOWEVER, JOINTS SHALL NOT EXCEED 100 FEET APART. CONTROL JOINTS SHALL BE INSTALLED AT 10 FOOT INTERVALS, HALF STONES ARE NOT ALLOWED.

13. ALL TRAFFIC CONTROL, IF REQUIRED, SHALL CONFORM TO THE APPLICABLE REGULATIONS SET FORTH IN THE MANUAL ON UNIFORM TRAFFIC CONTROL DEVICES (MUTCD).

14. ALL THE OPERATIONS SHALL CONFORM TO THE APPLICABLE REGULATIONS SET FORTH BY ICC AND OSHA.

15. ALL ON-SITE CONCRETE PAVEMENT SHALL HAVE A MINIMUM COMPRESSIVE STRENGTH OF 4500 PSI.

GRADING NOTES:

1. EXCAVATION AND EMBANKMENT SHALL BE IN ACCORDANCE WITH APPLICABLE REQUIREMENTS OF THE ITD STANDARD SPECIFICATIONS (CURRENT EDITION). ALL COMPACTION OF SUBGRADES, ROCK, AND ASPHALT SHALL BE IN ACCORDANCE WITH THE ITD STANDARD SPECIFICATIONS (CURRENT EDITION).

2. ALL FINISHED GRADING ELEVATIONS SHALL MATCH EXISTING ELEVATIONS AT THE SITE'S BOUNDARY, EXCEPT AS SHOWN OTHERWISE ON THE GRADING PLAN. WHERE CONFLICTS EXIST, THE CONTRACTOR SHALL NOTIFY THE OWNER TO RESOLVE THE ISSUE PRIOR TO PROCEEDING.

3. NO QUANTITIES HAVE BEEN CALCULATED TO DETERMINE VOLUMES OF EXCAVATION AND EMBANKMENT ON THIS PROJECT. CONTRACTOR SHALL CALCULATE THEIR OWN EARTHWORK QUANTITIES.

4. GRADING: ALL GRADING SHALL BE LIMITED TO THE AREAS IDENTIFIED IN THE GRADING PLAN AND SHALL NOT INFRINGE ON ADJACENT OWNERSHIPS.

5. CUT SLOPES IN SOLID ROCK SHALL NOT EXCEED 1/2:1 (HORIZONTAL: VERTICAL), AND SOIL CUT SLOPES SHALL NOT EXCEED 2:1 (HORIZONTAL: VERTICAL), EXCEPT AS SHOWN OTHERWISE ON THE PLANS.

6. FILL SLOPES ACROSS THE PROPERTY SHOULD BE DESIGNED FOR A MAXIMUM SLOPE OF 2:1 (HORIZONTAL: VERTICAL), EXCEPT AS SHOWN OTHERWISE ON THE PLANS.

7. ALL CURB AND GUTTER, STREET GRADES, SIDEWALK GRADES, AND ANY OTHER VERTICAL AND OR HORIZONTAL ALIGNMENT SHALL BE STAKED BY AN ENGINEERING OR SURVEYING FIRM CAPABLE OF PERFORMING SUCH WORK.

8. FORM AND SUBGRADE INSPECTION BY THE INSPECTOR IS REQUIRED BEFORE POURING THE CONCRETE. TWENTY-FOUR HOURS NOTICE IS REQUIRED FOR FORM INSPECTION.

9. TOP OF CURB (T.C.) IS 0.5' ABOVE ACP OR CCP UNLESS OTHERWISE NOTED.

10. RIM ELEVATIONS OF UTILITY AND DRAINAGE STRUCTURES SHALL BE INSTALLED SO THAT RIM MAY BE ADJUSTED ±0.5 FEET TO MATCH FINISHED GRADE.

STORM WATER NOTES:

1. THE CONTRACTOR SHALL TAKE PRECAUTIONS TO PROTECT THE INFILTRATION CAPACITY OF STORMWATER FACILITIES (E.G. LINE THE FACILITY WITH FILTER FABRIC, OVER-EXCAVATE UPON COMPLETION OF THE INFRASTRUCTURE, ETC.).

2. STORM DRAINAGE PIPING SHALL BE (UNLESS OTHERWISE NOTED) PVC ASTM D 3034, SDR 35, OR ASTM F 789 WITH PUSH-ON JOINTS AND RUBBER GASKETS CONFORMING TO ASTM D 3212 AND ASTM F 477. PROVIDE TRENCHING AND BEDDING PER ITD STANDARDS.

UTILITY NOTES:

1. CONTRACTOR SHALL COORDINATE WITH MISSOULA ELECTRIC COOPERATIVE FOR POWER SERVICE.

2. CONTRACTOR SHALL PLACE MARKING TAPE IN THE EXCAVATION TRENCH AT MID-DEPTH LOCATION FOR ALL UNDERGROUND SIDE SERVICE INSTALLATIONS FOR THE PURPOSE OF ALERTING ANY FUTURE EXCAVATION IN THE SPECIFIC AREA.

FOR PERMIT

THESE DRAWINGS ARE SUFFICIENTLY COMPLETE FOR SUBMISSION TO THE JURISDICTION HAVING AUTHORITY FOR PERMIT. THE CONTRACTOR SHALL NOT USE THESE DRAWINGS FOR CONSTRUCTION UNTIL THE CONTRACTOR RECEIVES WRITTEN APPROVAL FOR USE IN CONSTRUCTION BY THE JURISDICTION HAVING AUTHORITY AND DCI ENGINEERS.

CONTRACTOR NOTE

ALL EXISTING UTILITIES SHOWN ON PLANS ARE TO BE VERIFIED HORIZONTALLY AND VERTICALLY PRIOR TO ANY CONSTRUCTION. ALL EXISTING FEATURES INCLUDING BURIED UTILITIES ARE SHOWN AS INDICATED ON RECORD MAPS AND SURVEYS FURNISHED BY OTHERS. WE ASSUME NO LIABILITY FOR THE ACCURACY OF THOSE RECORDS AND SURVEYS. CONTACT THE UTILITY OWNER/AGENCY FOR THE FINAL LOCATION OF EXISTING UTILITIES IN AREAS CRITICAL TO CONSTRUCTION.

UNDERGROUND SERVICE ALERT
ONE-CALL NUMBER
811
CALL TWO BUSINESS DAYS BEFORE YOU DIG

MILLER STAUFFER ARCHITECTS
601 E. Front Ave., Suite 201
Coeur d'Alene, ID 83814
P 208.664.1773 F 208.667.3174
www.millerstauffer.com

GENERAL NOTES

2-17-2023

PROFESSIONAL ENGINEER LICENSED MATTHEW R. DAVIS 17233 STATE OF IDAHO 2/17/2023

ITD Powell Station - Phase 1
Equip. Shed Water
112 Lochsa Road, Idaho County, Idaho

NO.	DATE

PROJECT NO. 22042-0073
DRAWN BY EAJ
CHECKED BY JRS
DATE 2-17-2023

C0.1

LEGEND:

- FOUND BRASS CAP, AS NOTED
- FOUND 5/8" REBAR, MARKED FOREST SERVICE
- SET 5/8" X 24" REBAR WITH YELLOW PLASTIC CAP, MARKED "KA 13257"
- SET 5/8" REBAR WITH ORANGE PLASTIC CAP, MARKED " KELLER CONTROL" AS NOTED
- SET MAG NAIL IN ASPHALT KELLER CONTROL, AS NOTED
- CALCULATED POINT, NOTHING FOUND OR SET
- ROW — ROAD RIGHT-OF-WAY
- BOUNDARY LINE
- EP — EDGE OF PAVEMENT
- EG — EDGE OF GRAVEL AREA
- SS — UNDERGROUND SEWER LINE
- W — UNDERGROUND WATER LINE
- NG — UNDERGROUND GAS LINE
- UT — UNDERGROUND TELEPHONE LINE
- UGP — UNDERGROUND POWER LINE
- UTILITIES LOCATED BY RADAR, UNKNOWN
- CULVERT
- RETAINING WALL CONCRETE
- RETAINING WALL JERSEY BARRIER
- BUILDING OVERHANG
- FIRE HYDRANT
- SPIGOT, YARD HYDRANT
- W — WELL
- PP — POWER POLE, ABANDONED NO WIRES
- ELECTRIC TRANSFORMER
- PM — ELECTRIC METER
- ELECTRIC MARKER
- TR — TELEPHONE RISER
- SIGN, AS NOTED
- BOLLARD
- SEWER CLEANOUT
- LIGHT POLE
- GM — GAS METER
- VERTICAL PIPE
- BOULDER
- ROOF SUPPORT COLUMN
- HAVAC
- SATELLITE DISH
- EDGE OF TREE LINE
- ASPHALT AREA
- CONCRETE AREA
- 93 EG — GRAVEL AREA
- BUILDING OUTLINE

REFERENCE NOTES:

1. DEMOLISH AND REMOVE EXISTING UNDERGROUND TANK.
2. PROTECT IN PLACE EXISTING BUILDING.
3. LOCATION OF PREVIOUSLY DEMOLISHED MAINTENANCE BUILDING.
4. RELOCATE EXISTING PROPANE TANKS PER ARCHITECTURAL PLANS.
5. PROTECT IN PLACE EXISTING WEATHER STATION.
6. PROTECT IN PLACE EXISTING GENERATOR BUILDING, POWER POLE, WELL AND TRANSFORMER.
7. PROTECT IN PLACE EXISTING PUMP HOUSE.
8. DEMOLISH AND REMOVE EXISTING ASPHALT.
9. DEMOLISH AND REMOVE EXISTING SEPTIC SYSTEM.
10. DEMOLISH AND REMOVE EXISTING RETAINING WALL.
11. PROTECT IN PLACE EXISTING FUEL ISLAND.
12. REMOVE EXISTING GRAVEL.

N

GRAPHIC SCALE

30 0 15 30

(IN FEET)
1 inch = 30 ft.

FOR PERMIT

THESE DRAWINGS ARE SUFFICIENTLY COMPLETE FOR SUBMISSION TO THE JURISDICTION HAVING AUTHORITY FOR PERMIT. THE CONTRACTOR SHALL NOT USE THESE DRAWINGS FOR CONSTRUCTION UNTIL THE CONTRACTOR RECEIVES WRITTEN APPROVAL FOR USE IN CONSTRUCTION BY THE JURISDICTION HAVING AUTHORITY AND DCI ENGINEERS.

CONTRACTOR NOTE

ALL EXISTING UTILITIES SHOWN ON PLANS ARE TO BE VERIFIED HORIZONTALLY AND VERTICALLY PRIOR TO ANY CONSTRUCTION. ALL EXISTING FEATURES INCLUDING BURIED UTILITIES ARE SHOWN AS INDICATED ON RECORD MAPS AND SURVEYS FURNISHED BY OTHERS. WE ASSUME NO LIABILITY FOR THE ACCURACY OF THOSE RECORDS AND SURVEYS. CONTACT THE UTILITY OWNER/AGENCY FOR THE FINAL LOCATION OF EXISTING UTILITIES IN AREAS CRITICAL TO CONSTRUCTION.

UNDERGROUND SERVICE ALERT
ONE-CALL NUMBER
811
CALL TWO BUSINESS DAYS BEFORE YOU DIG

MILLER STAUFFER ARCHITECTS
601 E Front Ave., Suite 201
Coeur d'Alene, ID 83814
P 208.664.1773 F 208.667.3174
www.millerstauffer.com

EXISTING SITE CONDITIONS 2-17-2023

PROFESSIONAL ENGINEER LICENSED 17233 STATE OF IDAHO MATTHEW R. DAVIS 2/17/2023

ITD Powell Station - Phase 1
Equip. Shed Water
112 Lochsa Road, Idaho County, Idaho

	DATE
1	2/16/2023 ITD COMMENTS

PROJECT NO. 22042-0073
DRAWN BY EAJ
REVIEWED BY JFS
DRAWING NO. C1.0

REFERENCE NOTES:

1. PROVIDE SILT FENCING PER DETAIL 2/C5.0.
2. PROVIDE INLET PROTECTION PER DETAIL 3/C5.0.

ENGINEER'S NOTES:

1. EROSION CONTROL MEASURES SHOWN ON THE PLAN ARE MINIMUM REQUIREMENTS. THE CONTRACTOR SHALL INSTALL ADDITIONAL MEASURES, AS NEEDED, TO PREVENT SEDIMENT-LADEN RUN-OFF FROM LEAVING THE SITE OR COMPROMISING THE PROPOSED/EXISTING STORM WATER SYSTEM.
2. SEE SHEET C0.1 FOR ADDITIONAL ESC NOTES.
3. CONTRACTOR SHALL CONSTRUCT EROSION CONTROL FACILITIES BEFORE GRADING BEGINS.
4. THE CONTRACTOR SHALL UTILIZE PROPOSED DUST CONTROL MEASURES OUTLINED IN THE PLANS AND SPECIFICATIONS.

FOR PERMIT

THESE DRAWINGS ARE SUFFICIENTLY COMPLETE FOR SUBMISSION TO THE JURISDICTION HAVING AUTHORITY FOR PERMIT. THE CONTRACTOR SHALL NOT USE THESE DRAWINGS FOR CONSTRUCTION UNTIL THE CONTRACTOR RECEIVES WRITTEN APPROVAL FOR USE IN CONSTRUCTION BY THE JURISDICTION HAVING AUTHORITY AND DCI ENGINEERS.

CONTRACTOR NOTE

ALL EXISTING UTILITIES SHOWN ON PLANS ARE TO BE VERIFIED HORIZONTALLY AND VERTICALLY PRIOR TO ANY CONSTRUCTION. ALL EXISTING FEATURES INCLUDING BURIED UTILITIES ARE SHOWN AS INDICATED ON RECORD MAPS AND SURVEYS FURNISHED BY OTHERS. WE ASSUME NO LIABILITY FOR THE ACCURACY OF THOSE RECORDS AND SURVEYS. CONTACT THE UTILITY OWNER/AGENCY FOR THE FINAL LOCATION OF EXISTING UTILITIES IN AREAS CRITICAL TO CONSTRUCTION.

N

GRAPHIC SCALE

30 0 15 30

(IN FEET)
1 inch = 30 ft.

UNDERGROUND SERVICE ALERT
ONE-CALL NUMBER
811
CALL TWO BUSINESS DAYS BEFORE YOU DIG

MILLER STAUFFER ARCHITECTS
601 E Front Ave., Ste 201
Coeur d'Alene, ID 83814
P 208.664.1773 F 208.667.3174
www.millerstauffer.com

EROSION CONTROL PLAN
2-17-2023

PROFESSIONAL ENGINEER LICENSED 17233 STATE OF IDAHO MATTHEW R. FRIEDRICH DATE 2/17/2023

ITD Powell Station - Phase 1
Equip. Shed Water
112 Lochsa Road, Idaho County, Idaho

△	DATE: 2/16/2023 ITD COMMENTS

PROJECT NO.	22042-0073
DESIGNED BY	EAJ
DRAWN BY	JFS
SHEET NUMBER	C1.1

REFERENCE NOTES:

1. PROVIDE NEW ASPHALT PAVEMENT PER DETAIL 4/C5.0.
2. PROVIDE NEW CONCRETE SIDEWALK PER DETAILS 7 & 8/C5.0.
3. PROVIDE NEW TYPE 2 CONCRETE CURB PER DETAIL 9/C5.0.
4. TRANSITION CURB FROM FLUSH TO 6" REVEAL PER GRADES PROVIDED.
5. MATCH GRAVEL ELEVATION AT EDGE OF ASPHALT.
6. PROVIDE NEW TYPE 1 CONCRETE CURB AND GUTTER PER DETAIL 9/C5.0.
7. CONTRACTOR SHALL TRANSITION FROM FLUSH CURB TO 4" REVEAL PER GRADES PROVIDED.
8. MATCH EXISTING ASPHALT GRADE.
9. PROVIDE NEW PEDESTRIAN RAMP PER GRADES PROVIDED.
10. PROVIDE NEW CONCRETE "V" GUTTER PER DETAIL 6/C5.0.
11. PROVIDE NEW ECOLOGY BLOCK IN FRONT OF EXISTING GENERATOR BUILDING PER GRADES PROVIDED.
12. GRADE NEW SEPTIC DRAINFIELD AREA PER GRADES PROVIDED.
13. PROVIDE PAVEMENT DIRECTIONAL ARROWS. COORDINATE WITH ARCHITECTURAL.
14. PROVIDE NEW ADA STALL SIGNAGE AND STRIPING PER DETAIL 4/C5.2.
15. CONTRACTOR SHALL TIE INTO EXISTING GRADE AT A 2:1 SLOPE PER GRADES PROVIDED.
16. PROVIDE WHEEL STOPS PER DETAIL 6/C5.2.
17. PROVIDE NEW FLUSH CURB PER DETAIL 1/C5.0.
18. CONTRACTOR SHALL PROVIDE 1' WIDTH BERM TO TIE INTO EXISTING GRADE AT A 2:1 SLOPE PER GRADES PROVIDED.

FOR PERMIT

THESE DRAWINGS ARE SUFFICIENTLY COMPLETE FOR SUBMISSION TO THE JURISDICTION HAVING AUTHORITY FOR PERMIT. THE CONTRACTOR SHALL NOT USE THESE DRAWINGS FOR CONSTRUCTION UNTIL THE CONTRACTOR RECEIVES WRITTEN APPROVAL FOR USE IN CONSTRUCTION BY THE JURISDICTION HAVING AUTHORITY AND DCI ENGINEERS.

CONTRACTOR NOTE

ALL EXISTING UTILITIES SHOWN ON PLANS ARE TO BE VERIFIED HORIZONTALLY AND VERTICALLY PRIOR TO ANY CONSTRUCTION. ALL EXISTING FEATURES INCLUDING BURIED UTILITIES ARE SHOWN AS INDICATED ON RECORD MAPS AND SURVEYS FURNISHED BY OTHERS. WE ASSUME NO LIABILITY FOR THE ACCURACY OF THOSE RECORDS AND SURVEYS. CONTACT THE UTILITY OWNER/AGENCY FOR THE FINAL LOCATION OF EXISTING UTILITIES IN AREAS CRITICAL TO CONSTRUCTION.

N

GRAPHIC SCALE

30 0 15 30

(IN FEET)
1 inch = 30 ft.

UNDERGROUND SERVICE ALERT
ONE-CALL NUMBER
811
CALL TWO BUSINESS DAYS BEFORE YOU DIG

MILLER STAUFFER ARCHITECTS
601 E. Front Ave., Suite 201
Coeur d'Alene, ID 83814
P 208.664.1773 F 208.667.3174
www.millerstauffer.com

GRADING PLAN

2-17-2023

PROFESSIONAL ENGINEER LICENSED 17233 STATE OF IDAHO MATTHEW R. DAVIS 2/17/2023

ITD Powell Station - Phase 1
Equip. Shed Water
112 Lochsa Road, Idaho County, Idaho

	DATE
1	2/16/2023
	ITD COMMENTS

PROJECT NO. 22042-0073
DESIGNED BY EAJ
DRAWN BY JFS
CHECKED BY

C1.2

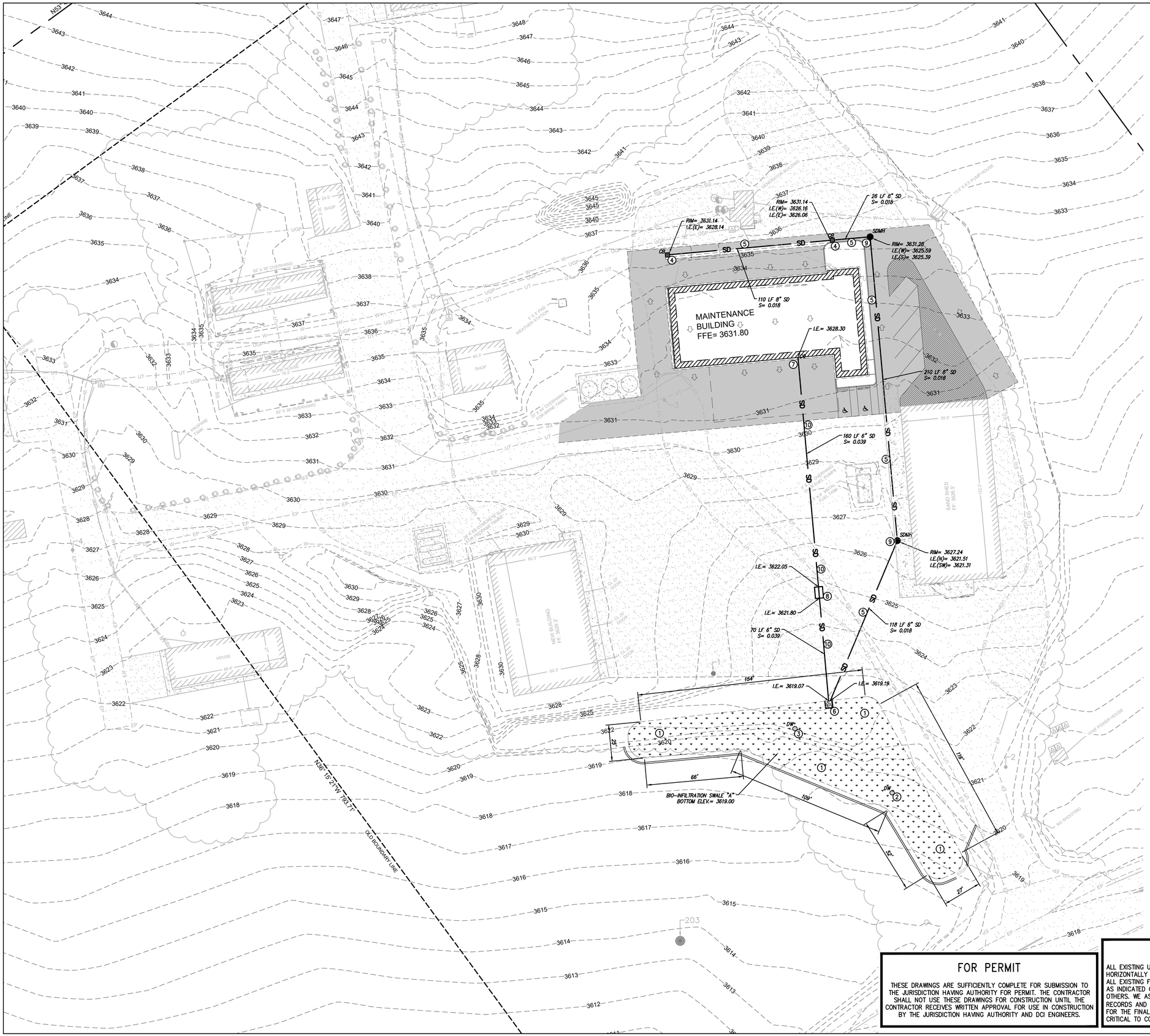

REFERENCE NOTES:

1. PROVIDE NEW BIO-INFILTRATION SWALE. SEE DETAIL 5/C5.2.
2. PROVIDE NEW SINGLE DEPTH DRYWELL. SEE DETAILS 7 & 8/C5.1.
3. PROVIDE NEW DOUBLE DEPTH DRYWELL. SEE DETAILS 7 & 8/C5.1.
4. PROVIDE NEW TYPE III CATCH BASIN WITH GRATED LID PER ITD STANDARDS. SEE DETAILS 4 & 5/C5.1.
5. PROVIDE NEW 8" SDR35 PVC STORM DRAINAGE PIPE. SLOPE AND LENGTH PER PLAN.
6. PROVIDE NEW RIP-RAP PAD AT PIPE DAYLIGHT LOCATION.
7. PROVIDE NEW CLEANOUT TO GRADE PER DETAIL 9/C5.1.
8. PROVIDE NEW OIL/WATER SEPARATOR. SEE DETAIL 3/C5.1.
9. PROVIDE NEW STORM DRAIN MANHOLE. SEE DETAILS 1 & 2/C5.1.
10. PROVIDE NEW 6" SDR35 PVC STORM DRAINAGE PIPE. SLOPE AND LENGTH PER PLAN.

ENGINEER'S NOTES:

1. ALL DRAINAGE AND UTILITY STRUCTURES SHALL BE INSTALLED SO THAT RIM ELEVATIONS CAN BE ADJUSTED ±0.5 FEET TO MATCH FINISHED GRADE.
2. SEE SHEET C0.1 FOR ADDITIONAL SITE NOTES.

BIO-INFILTRATION SWALE "A"
PGIS AREA = 107,702 SQ. FT.
TREATMENT VOLUME REQUIRED = 3,620 CU. FT.
TREATMENT VOLUME PROVIDED = 4,912 CU. FT.
BOTTOM AREA = 9,528 SQ. FT.
BOTTOM ELEVATION = 3619.00
RIM ELEVATION= 3619.50
BERM ELEVATION= 3620.00
SIDE SLOPE = 3:1 (MAXIMUM)

N

GRAPHIC SCALE

30 0 15 30

(IN FEET)
1 inch = 30 ft.

FOR PERMIT

THESE DRAWINGS ARE SUFFICIENTLY COMPLETE FOR SUBMISSION TO THE JURISDICTION HAVING AUTHORITY FOR PERMIT. THE CONTRACTOR SHALL NOT USE THESE DRAWINGS FOR CONSTRUCTION UNTIL THE CONTRACTOR RECEIVES WRITTEN APPROVAL FOR USE IN CONSTRUCTION BY THE JURISDICTION HAVING AUTHORITY AND DCI ENGINEERS.

CONTRACTOR NOTE

ALL EXISTING UTILITIES SHOWN ON PLANS ARE TO BE VERIFIED HORIZONTALLY AND VERTICALLY PRIOR TO ANY CONSTRUCTION. ALL EXISTING FEATURES INCLUDING BURIED UTILITIES ARE SHOWN AS INDICATED ON RECORD MAPS AND SURVEYS FURNISHED BY OTHERS. WE ASSUME NO LIABILITY FOR THE ACCURACY OF THOSE RECORDS AND SURVEYS. CONTACT THE UTILITY OWNER/AGENCY FOR THE FINAL LOCATION OF EXISTING UTILITIES IN AREAS CRITICAL TO CONSTRUCTION.

UNDERGROUND SERVICE ALERT
ONE-CALL NUMBER
811
CALL TWO BUSINESS DAYS BEFORE YOU DIG

MILLER STAUFFER ARCHITECTS
601 E. Front Ave., Suite 201
Coeur d'Alene, ID 83814
P 208.664.1773 F 208.667.3174
www.millerstauffer.com

PROFESSIONAL ENGINEER LICENSED 17233 STATE OF IDAHO MATTHEW R. EAJ 2/17/2023

STORM WATER PLAN
2-17-2023

ITD Powell Station - Phase 1
Equip. Shed Water
112 Lochsa Road, Idaho County, Idaho

	DATE
1	2/16/2023 ITD COMMENTS

22042-0073
EAJ
JFS

C1.3

REFERENCE NOTES:

1. PROVIDE NEW 1 1/2" HDPE DOMESTIC WATER SERVICE.
2. PROVIDE NEW CLEANOUT TO GRADE PER DETAIL 9/C5.1.
3. PROVIDE NEW 6" SDR35 PVC SEPTIC PIPE. SLOPE AND LENGTH PER PLAN.
4. PROVIDE NEW SEPTIC TANK PER DETAIL 6/C5.1.
5. PROPOSED NEW SEPTIC DRAINFIELD AREA SEE DETAILS 2/C5.2 AND 3/C5.2.
6. PROVIDE NEW DISTRIBUTION BOX PER DETAIL 1/C5.2.
7. PROPOSED POWER LINE. COORDINATE WITH ELECTRICAL.
8. PROVIDE NEW MONITORING PORT PER DETAIL 3/C5.2.
9. PROPOSED PROPANE RELOCATION. COORDINATE WITH ARCHITECTURAL PLANS.
10. CONTRACTOR SHALL ENSURE POSITIVE DRAINAGE AWAY FROM SEPTIC DRAINFIELD PER GRADES PROVIDED ON SHEET C1.2.
11. PROVIDE NEW SEPTIC DRAINFIELD RESERVE AREA.
12. PROVIDE NEW PROPANE SUPPLY LINE. COORDINATE WITH PLUMBING PLANS.

FOR PERMIT

THESE DRAWINGS ARE SUFFICIENTLY COMPLETE FOR SUBMISSION TO THE JURISDICTION HAVING AUTHORITY FOR PERMIT. THE CONTRACTOR SHALL NOT USE THESE DRAWINGS FOR CONSTRUCTION UNTIL THE CONTRACTOR RECEIVES WRITTEN APPROVAL FOR USE IN CONSTRUCTION BY THE JURISDICTION HAVING AUTHORITY AND DCI ENGINEERS.

CONTRACTOR NOTE

ALL EXISTING UTILITIES SHOWN ON PLANS ARE TO BE VERIFIED HORIZONTALLY AND VERTICALLY PRIOR TO ANY CONSTRUCTION. ALL EXISTING FEATURES INCLUDING BURIED UTILITIES ARE SHOWN AS INDICATED ON RECORD MAPS AND SURVEYS FURNISHED BY OTHERS. WE ASSUME NO LIABILITY FOR THE ACCURACY OF THOSE RECORDS AND SURVEYS. CONTACT THE UTILITY OWNER/AGENCY FOR THE FINAL LOCATION OF EXISTING UTILITIES IN AREAS CRITICAL TO CONSTRUCTION.

N

GRAPHIC SCALE

30 0 15 30

(IN FEET)
1 inch = 30 ft.

UNDERGROUND SERVICE ALERT
ONE-CALL NUMBER
811
CALL TWO BUSINESS DAYS BEFORE YOU DIG

MILLER STAUFFER ARCHITECTS
601 E. Front Ave., Ste.201
Coeur d'Alene, ID 83814
P 208.664.1773 F 208.667.3174
www.millerstauffer.com

UTILITY PLAN

2-17-2023

PROFESSIONAL ENGINEER LICENSED 17233 STATE OF IDAHO MATTHEW R. BOLTON 2/17/2023

ITD Powell Station - Phase 1
Equip. Shed Water
112 Lochsa Road, Idaho County, Idaho

	DATE
1	2/16/2023 ITD COMMENTS

22042-0073
EAJ
JFS

C1.4

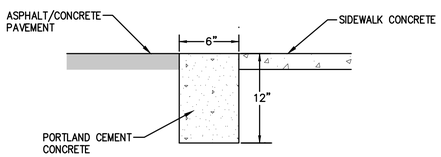

FLUSH CURB

SCALE : NTS (1)

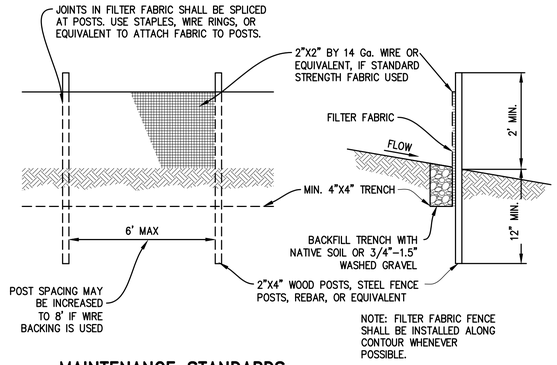

NOTE: FILTER FABRIC FENCE SHALL BE INSTALLED ALONG CONTOUR WHENEVER POSSIBLE.

MAINTENANCE STANDARDS:

1. ANY DAMAGE SHALL BE REPAIRED IMMEDIATELY.

2. IF CONCENTRATED FLOWS ARE EVIDENT UPHILL OF THE FENCE, THEY MUST BE INTERCEPTED AND CONVEYED TO A SEDIMENT TRAP OR POND.

3. IT IS IMPORTANT TO CHECK THE UPHILL SIDE OF THE FENCE FOR SIGN OF THE FENCE CLOGGING AND ACTING AS A BARRIER TO FLOW AND THEN CAUSING CHANNELIZATION OF FLOWS PARALLEL TO THE FENCE. IF THIS OCCURS, REPLACE THE FENCE AND/OR REMOVE THE TRAPPED SEDIMENT.

4. SEDIMENT MUST BE REMOVED WHEN THE SEDIMENT IS 6" HIGH.

5. IF THE FILTER FABRIC HAS DETERIORATED DUE TO ULTRAVIOLET BREAKDOWN, IT SHALL BE REPLACED.

FILTER FABRIC FENCE DETAIL

SCALE : NTS (2)

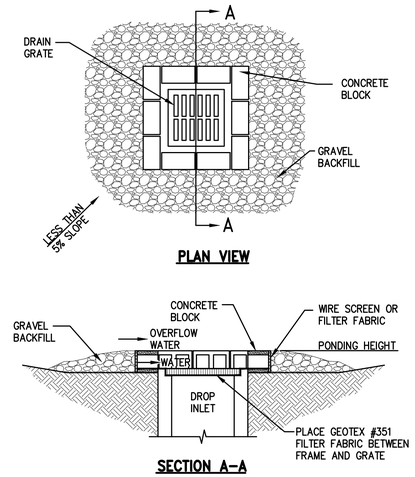

NOTES:

1. DROP INLET SEDIMENT BARRIERS ARE TO BE USED FOR SMALL, NEARLY LEVEL DRAINAGE AREAS. (LESS THAN 5%)

2. EXCAVATE A BASIN OF SUFFICIENT SIZE ADJACENT TO THE DROP INLET.

3. THE TOP OF THE STRUCTURE (PONDING HEIGHT) MUST BE WELL BELOW THE GROUND ELEVATION DOWNSLOPE TO PREVENT RUNOFF FROM BYPASSING THE INLET. A TEMPORARY DIKE MAY BE NECESSARY ON THE DOWNSLOPE SIDE OF THE STRUCTURE.

INLET PROTECTION DETAIL

SCALE : NTS (3)

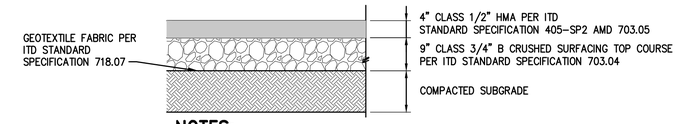

NOTES:

1. PAVEMENT SHALL BE IN ACCORDANCE WITH RECOMMENDATIONS OF THE GEOTECHNICAL EVALUATION.

ASPHALT PAVEMENT SECTION

SCALE : NTS (4)

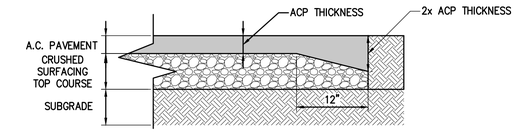

ACP THICKENED EDGE DETAIL

SCALE : NTS (5)

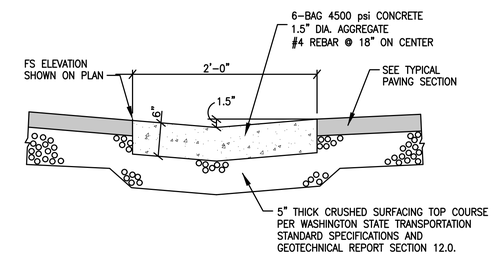

NOTE: CONTRACTOR SHALL ADHERE TO ALL RECOMMENDATIONS IN GEOTECHNICAL REPORT BY STRATA DATED JANUARY 19, 2023

2' CONCRETE WATERWAY

SCALE : NTS (6)

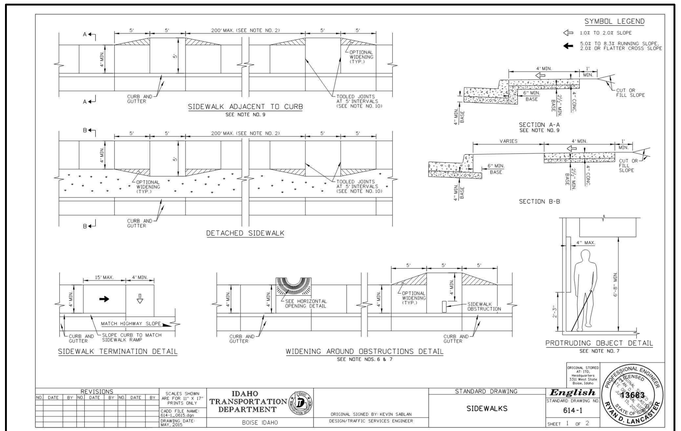

SIDEWALKS

SCALE : NTS (7)

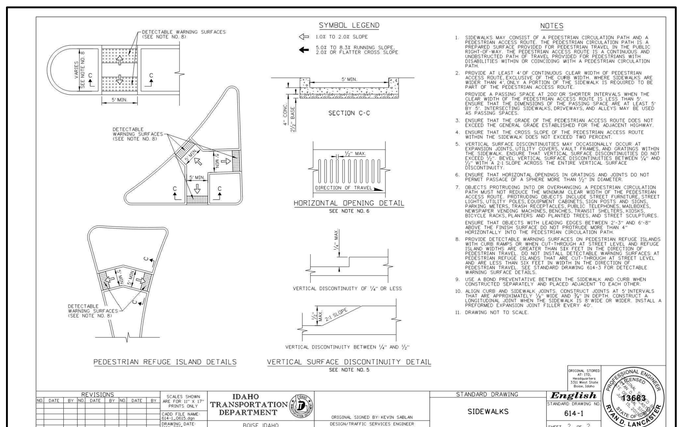

SIDEWALKS

SCALE : NTS (8)

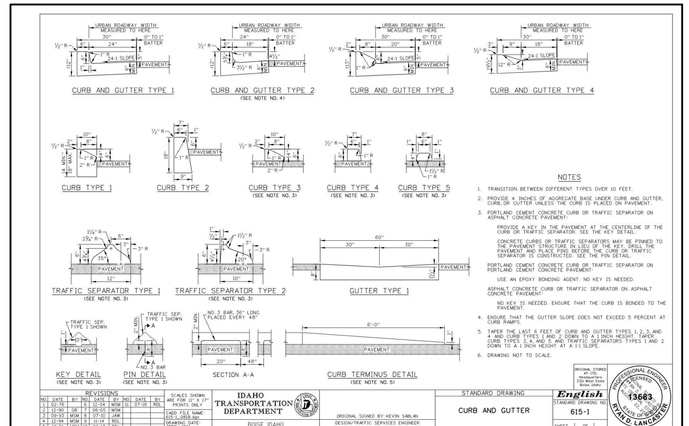

CURB AND GUTTER

SCALE : NTS (9)

FOR PERMIT

THESE DRAWINGS ARE SUFFICIENTLY COMPLETE FOR SUBMISSION TO THE JURISDICTION HAVING AUTHORITY FOR PERMIT. THE CONTRACTOR SHALL NOT USE THESE DRAWINGS FOR CONSTRUCTION UNTIL THE CONTRACTOR RECEIVES WRITTEN APPROVAL FOR USE IN CONSTRUCTION BY THE JURISDICTION HAVING AUTHORITY AND DCI ENGINEERS.

CONTRACTOR NOTE

ALL EXISTING UTILITIES SHOWN ON PLANS ARE TO BE VERIFIED HORIZONTALLY AND VERTICALLY PRIOR TO ANY CONSTRUCTION. ALL EXISTING FEATURES INCLUDING BURIED UTILITIES ARE SHOWN AS INDICATED ON RECORD MAPS AND SURVEYS FURNISHED BY OTHERS. WE ASSUME NO LIABILITY FOR THE ACCURACY OF THOSE RECORDS AND SURVEYS. CONTACT THE UTILITY OWNER/AGENCY FOR THE FINAL LOCATION OF EXISTING UTILITIES IN AREAS CRITICAL TO CONSTRUCTION.

UNDERGROUND SERVICE ALERT
ONE-CALL NUMBER
811
CALL TWO BUSINESS DAYS BEFORE YOU DIG

MILLER STAUFFER ARCHITECTS
601 E. Front Ave., Ste 201
Coeur d'Alene, ID 83814
P 208.664.1773 F 208.667.3174
www.millerstauffer.com

DETAILS

2-17-2023

PROFESSIONAL ENGINEER LICENSED 17233 STATE OF IDAHO MATTHEW R. DRIGGS 2/17/2023

ITD Powell Station - Phase 1
Equip. Shed Water
112 Lochsa Road, Idaho County, Idaho

	DATE	
1	2/17/2023	ITD COMMENTS

22042.0073
DESIGNED BY EAJ
DRAWN BY JRS

C5.0

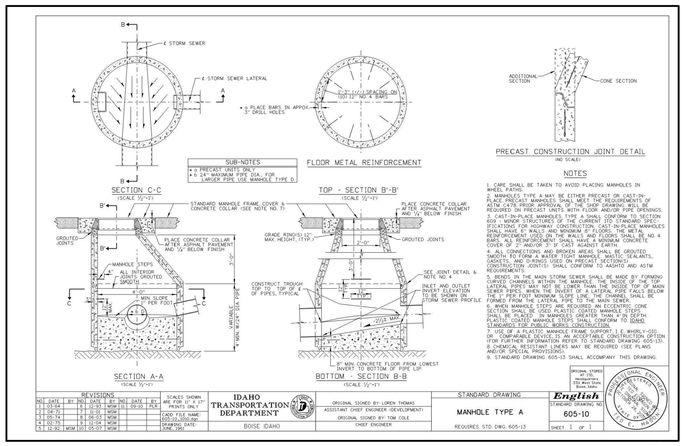

MANHOLE TYPE A

SCALE : NTS (1)

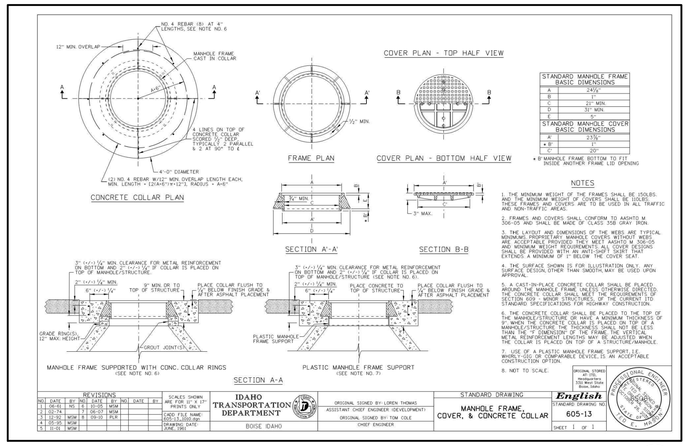

MANHOLE FRAME, COVER AND CONCRETE COLLAR

SCALE : NTS (2)

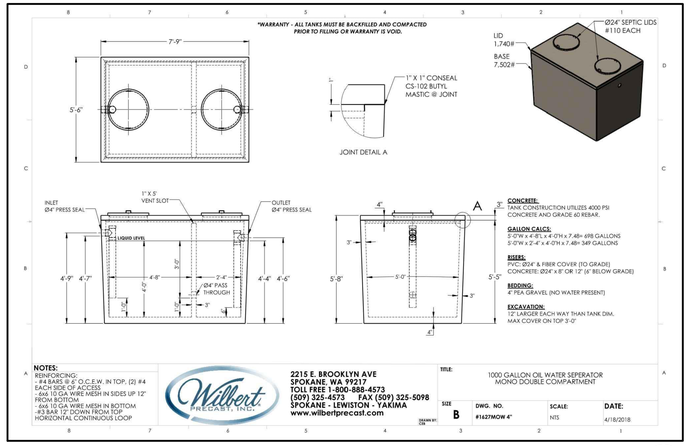

1000 GALLON OIL WATER SEPARATOR

SCALE : NTS (3)

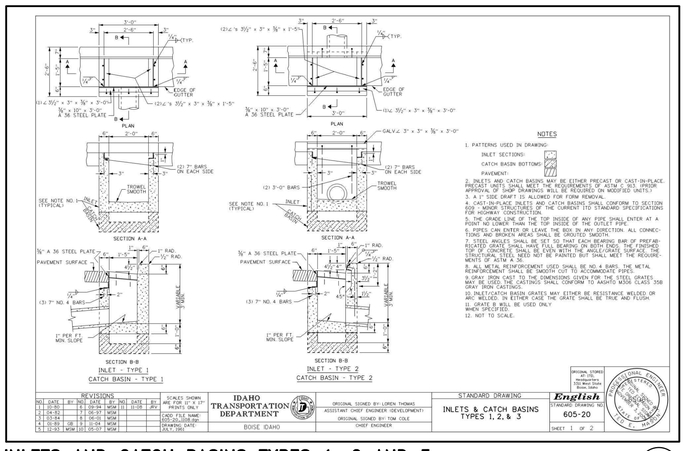

INLETS AND CATCH BASINS TYPES 1, 2 AND 3

SCALE : NTS (4)

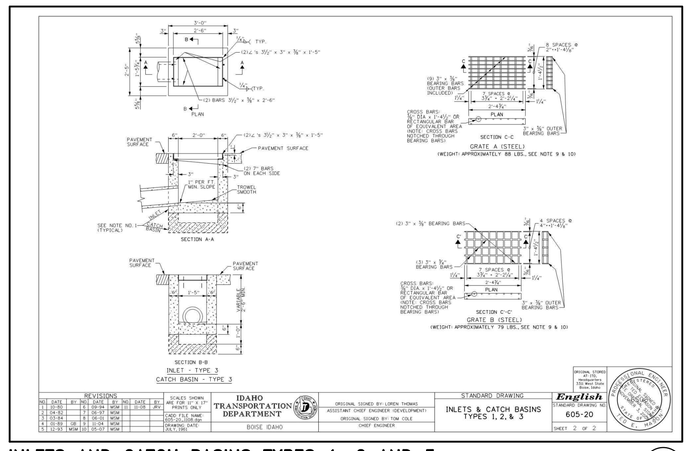

INLETS AND CATCH BASINS TYPES 1, 2 AND 3

SCALE : NTS (5)

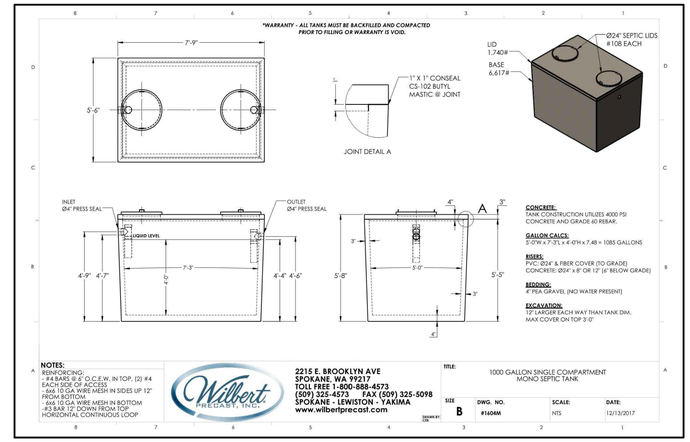

SEPTIC TANK

SCALE : NTS (6)

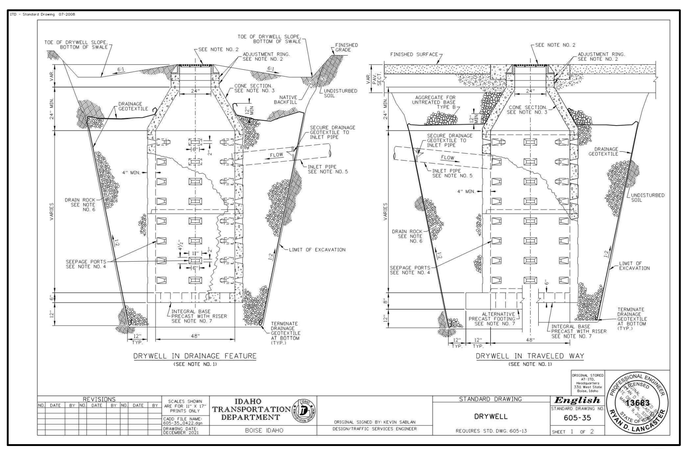

DRYWELL

SCALE : NTS (7)

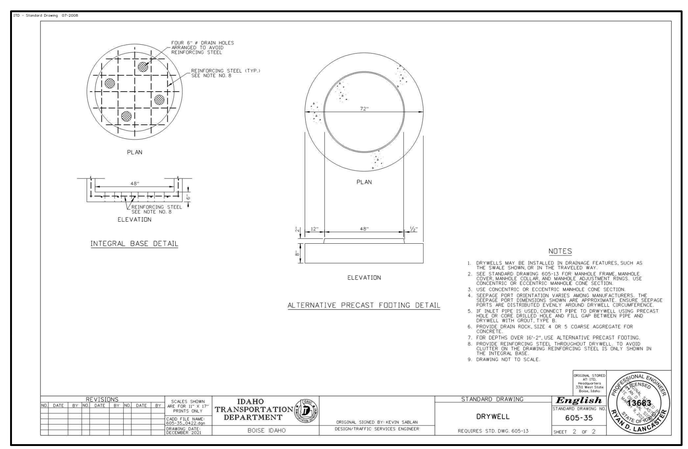

DRYWELL

SCALE : NTS (8)

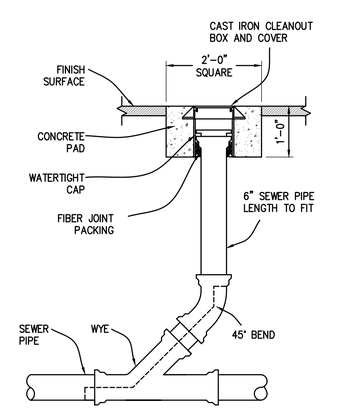

TYPICAL CLEANOUT

SCALE : NTS (9)

FOR PERMIT

THESE DRAWINGS ARE SUFFICIENTLY COMPLETE FOR SUBMISSION TO THE JURISDICTION HAVING AUTHORITY FOR PERMIT. THE CONTRACTOR SHALL NOT USE THESE DRAWINGS FOR CONSTRUCTION UNTIL THE CONTRACTOR RECEIVES WRITTEN APPROVAL FOR USE IN CONSTRUCTION BY THE JURISDICTION HAVING AUTHORITY AND DCI ENGINEERS.

CONTRACTOR NOTE

ALL EXISTING UTILITIES SHOWN ON PLANS ARE TO BE VERIFIED HORIZONTALLY AND VERTICALLY PRIOR TO ANY CONSTRUCTION. ALL EXISTING FEATURES INCLUDING BURIED UTILITIES ARE SHOWN AS INDICATED ON RECORD MAPS AND SURVEYS FURNISHED BY OTHERS. WE ASSUME NO LIABILITY FOR THE ACCURACY OF THOSE RECORDS AND SURVEYS. CONTACT THE UTILITY OWNER/AGENCY FOR THE FINAL LOCATION OF EXISTING UTILITIES IN AREAS CRITICAL TO CONSTRUCTION.

UNDERGROUND SERVICE ALERT
ONE-CALL NUMBER
811
CALL TWO BUSINESS DAYS BEFORE YOU DIG

MILLER STAUFFER ARCHITECTS
601 E. Front Ave., Suite 201
Coeur d'Alene, ID 83814
P: 208.664.1773 F: 208.667.3114
www.millerstauffer.com

DETAILS

2-17-2023

PROFESSIONAL ENGINEER — LICENSED — 17233 — STATE OF IDAHO — MAX HEW R. 2/17/2023

ITD Powell Station - Phase 1
Equip. Shed Water
112 Lochsa Road, Idaho County, Idaho

1	DATE: 2/16/2023 ITD COMMENTS

PROJECT NO. 22042-0073
DESIGNED BY EAJ
DRAWN BY JFS
CHECKED BY

C5.1

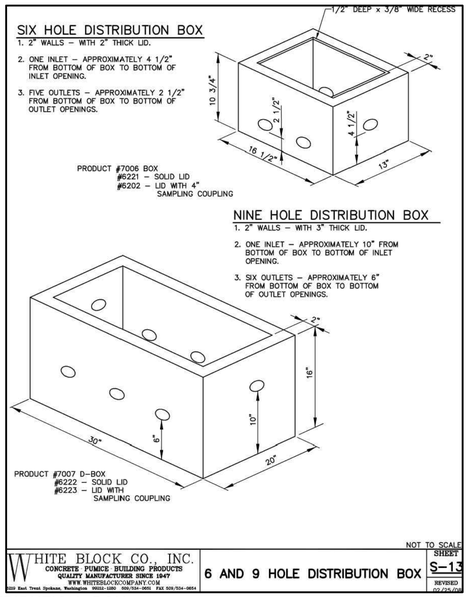

DISTRIBUTION BOX

SCALE : NTS (1)

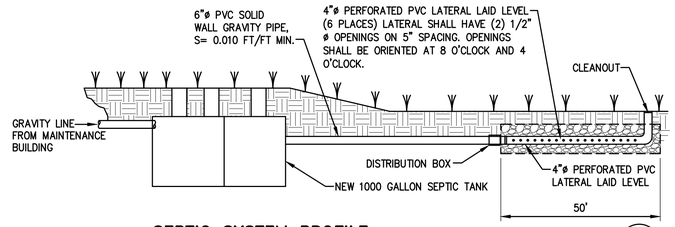

SEPTIC SYSTEM PROFILE

SCALE : NTS (2)

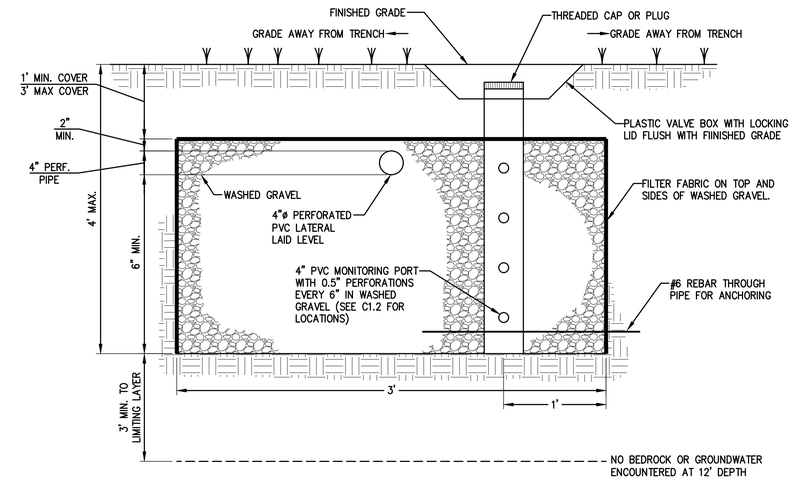

TRENCH SECTION DETAIL

SCALE : NTS (3)

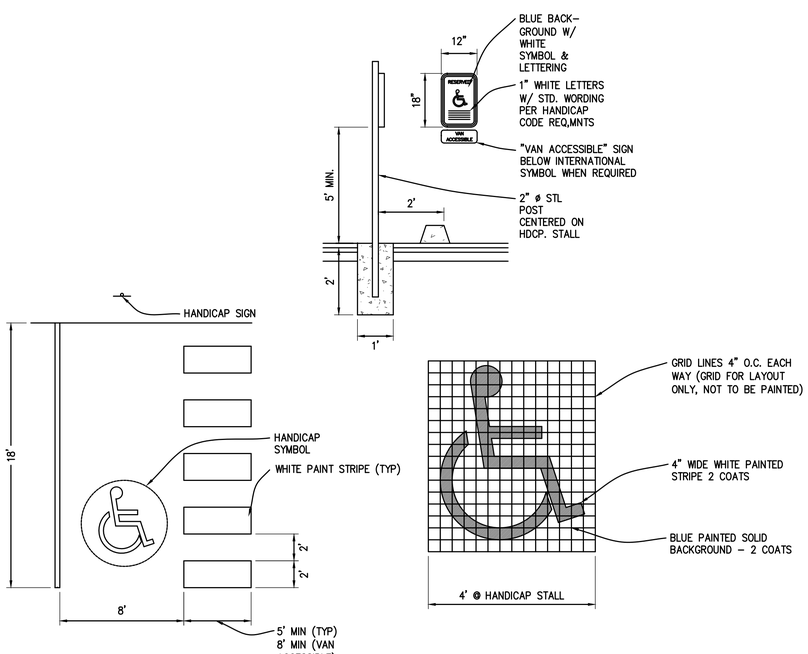

ADA PARKING STALL SIGNAGE AND STRIPING DETAIL

SCALE : NTS (4)

NOTES:

1. SEE LANDSCAPE PLANS FOR SWALE PLANTING DETAILS.

2. SOD SHALL BE PLACED IN ALL SWALE BOTTOMS AND SIDE SLOPES.

3. THE FOLLOWING REQUIREMENTS MUST BE MET FOR THE PROPOSED SWALES VOLUMES TO BE ALLOWED ON THIS PROJECT:

A. THE SUBGRADE SOILS HAVE LESS THAN 12% FINES.
B. THE SUBGRADE SOILS HAVE AN INFILTRATION RATE GREATER THAN 0.15 IN/HR.
C. THE TREATMENT ZONE (VEGETATED COVER AND TREATMENT LAYER) MUST BE 14" THICK AND HAVE AN INFILTRATION RATE BETWEEN 0.25 AND 0.50 IN/HR.
D. SUBGRADE INFILTRATION RATE MUST BE AT LEAST 0.15 IN/HR AND FACILITY MUST COMPLETELY DRAIN WITHIN 72 HOURS.
E. THE ORGANIC MATTER CONTENT MUST BE AT LEAST 2% BY WEIGHT.
F. THE AVERAGE CATION EXCHANGE CAPACITY (CEC) MUST BE AT LEAST 15 MILLIEQUIVALENTS/100 GRAMS.

4. CONTRACTOR SHALL NOT COMPACT ANY PROPOSED SWALE AREAS VIA CONSTRUCTION TRAFFIC. DO NOT DUMP ANY CONSTRUCTION WASTE MATERIALS, ESPECIALLY CONCRETE WASTE, INTO ANY PROPOSED SWALE AREA.

5. FOR SWALES AND PONDS, THE TOP 6" OF SOIL SHALL CONSIST OF A THOROUGHLY BLENDED MIX OF 50% COMPOST WITH 50% NATIVE SOILS. IF THIS SPECIFICATION IS MET, NOTES 3B–3F ARE NOT REQUIRED TO BE MET.

6. DRYLAND GRASS

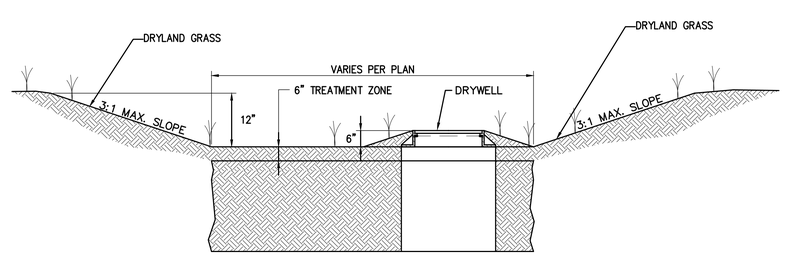

BIO–INFILTRATION SWALE

SCALE : NTS (5)

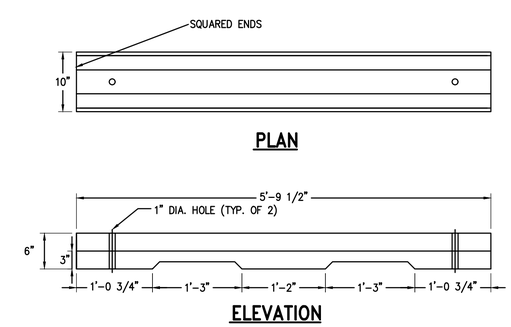

CONCRETE WHEEL STOP

SCALE : NTS (6)

FOR PERMIT

THESE DRAWINGS ARE SUFFICIENTLY COMPLETE FOR SUBMISSION TO THE JURISDICTION HAVING AUTHORITY FOR PERMIT. THE CONTRACTOR SHALL NOT USE THESE DRAWINGS FOR CONSTRUCTION UNTIL THE CONTRACTOR RECEIVES WRITTEN APPROVAL FOR USE IN CONSTRUCTION BY THE JURISDICTION HAVING AUTHORITY AND DCI ENGINEERS.

CONTRACTOR NOTE

ALL EXISTING UTILITIES SHOWN ON PLANS ARE TO BE VERIFIED HORIZONTALLY AND VERTICALLY PRIOR TO ANY CONSTRUCTION. ALL EXISTING FEATURES INCLUDING BURIED UTILITIES ARE SHOWN AS INDICATED ON RECORD MAPS AND SURVEYS FURNISHED BY OTHERS. WE ASSUME NO LIABILITY FOR THE ACCURACY OF THOSE RECORDS AND SURVEYS. CONTACT THE UTILITY OWNER/AGENCY FOR THE FINAL LOCATION OF EXISTING UTILITIES IN AREAS CRITICAL TO CONSTRUCTION.

UNDERGROUND SERVICE ALERT
ONE-CALL NUMBER
811
CALL TWO BUSINESS DAYS BEFORE YOU DIG

MILLER STAUFFER ARCHITECTS
601 E. Front Ave., Ste.201
Coeur d'Alene, ID 83814
P 208.664.1773 F 208.667.3174
www.millerstauffer.com

DETAILS

2-17-2023

PROFESSIONAL ENGINEER LICENSED 17233 STATE OF IDAHO MATTHEW R. DAVIS 2/17/2023

ITD Powell Station - Phase 1
Equip. Shed Water
112 Lochsa Road, Idaho County, Idaho

DATE	2/16/2023
ITD COMMENTS	

PROJECT NO.	22042-0073
DRAWN BY	EAJ
CHECKED BY	JFS
DRAWING NO.	C5.2

SHEET KEYNOTES

<varies>

1 1 1/2" PLASTIC-LAMINATE CLAD COUNTERTOP - MEDIUM GRADE - MEDIUM PRICE GROUP W/ 3/4" EASED EDGE WOOD BANDING
2 COMMERCIAL FLOOR MOUNTED TANKED WATER CLOSET - REFER TO PLUMBING FIXTURE SCHEDULE
3 WALL MOUNTED LAVATORY W/ ANSI COMPLIANT PIPE & DRAIN PROTECTION (+34" MAX. A.F.F.)
4 28"x28" COMMERCIAL FLOOR MOUNTED SERVICE SINK - REFER TO PLUMBING FIXTURE SCHEDULE
5 HIGH-LOW DRINKING FOUNTAIN - REFER TO PLUMBING FIXTURE SCHEDULE
6 FURNITURE BY OWNER - SHOWN ONLY FOR REFERENCE (NOT INCLUDED IN SCOPE OF WORK)
7 FREESTANDING COMMERCIAL ICE-MACHINE SUPPLIED BY OWNER & INSTALLED BY CONTRACTOR
8 RESIDENTIAL ELECTRIC RANGE - SUPPLIED & INSTALLED BY OWNER
9 RESIDENTIAL REFRIGERATOR / FREEZER - SUPPLIED & INSTALLED BY OWNER
10 EMERGENCY EYE/FACE WASH STATION - REFER TO PLUMBING FIXTURE SCHEDULE

SHEET KEYNOTES

11 BUILT-IN INDUSTRIAL PRESSURE WASHER - OWNER SUPPLIED & CONTRACTOR INSTALLED
12 DRILL PRESS - OWNER SUPPLIED & INSTALLED
13 WELDER - OWNER SUPPLIED & INSTALLED
14 PAINTED EXPOSED STRUCTURAL STEEL COLUMN - REFER TO STRUCTURAL
15 6"X6"X60" SQUARE CONCRETE FILLED BOLLARD W/ PAINTED FINISH & WHITE PAINT STRIPE
16 1 1/4" PIPE HANDRAIL W/ WALL RETURNS - PAINTED FINISH (ANSI COMPLIANT)
17 ALUMINUM FRAMED STOREFRONT - REFER TO WINDOW TYPES
18 OVERHEAD INSULATED SECTIONAL DOOR W/ AUTOMATIC DOOR OPENER - REFER TO DOOR SCHEDULE & TYPES
19 12" x 12" METAL STORAGE LOCKERS - SUPPLIED & INSTALLED BY OWNER - SHOWN ONLY FOR REFERENCE
20 CONCEALED STRUCTURAL STEEL COLUMN W/ SHOP PRIMER FINISH - REFER TO STRUCTURAL
21 CAST-IN-PLACE STANDARD GRAY CONCRETE PIER - REFER TO STRUCTURAL

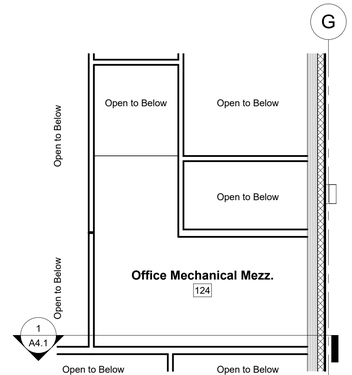

Office Mech. Mezzanine
3/16" = 1'-0"

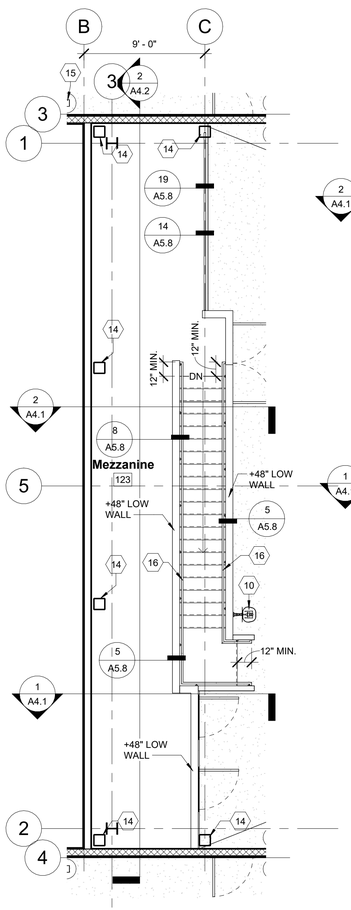

Mezzanine
3/16" = 1'-0"

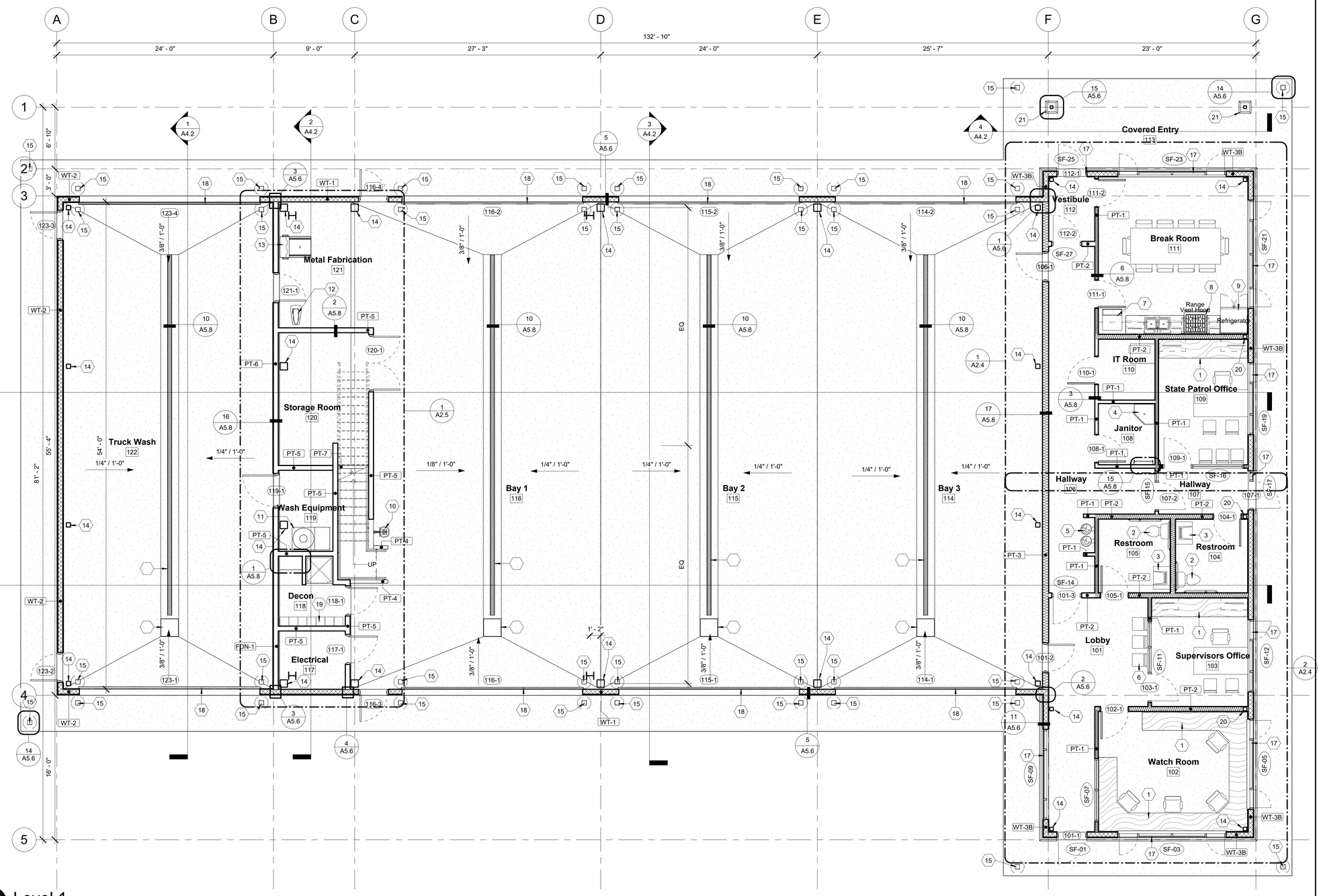

Level 1
3/16" = 1'-0"

MILLER STAUFFER ARCHITECTS
601 E. FRONT AVE. STE 201
COEUR D' ALENE, IDAHO 83814
P 208.664-1773 F 208.667.3174
WWW.MILLERSTAUFFER.COM

Floor Plan
Permit / Bid Set
2-17-2023

Powell Sta. Maintenance
Highway 12 @ Milepost 162.5
Powell Station, Idaho

LICENSED ARCHITECT
AR-984931
MICHEAL P. WALKER
STATE OF IDAHO

No.	Description	Date

PROJECT NUMBER 2206
PRINCIPAL Designer
PROJECT MANAGER Author

A2.1

2/17/2023 11:41:08 AM S:\ITD Powell Station\CD's\ITD Powell Station - Maintenance.rvt

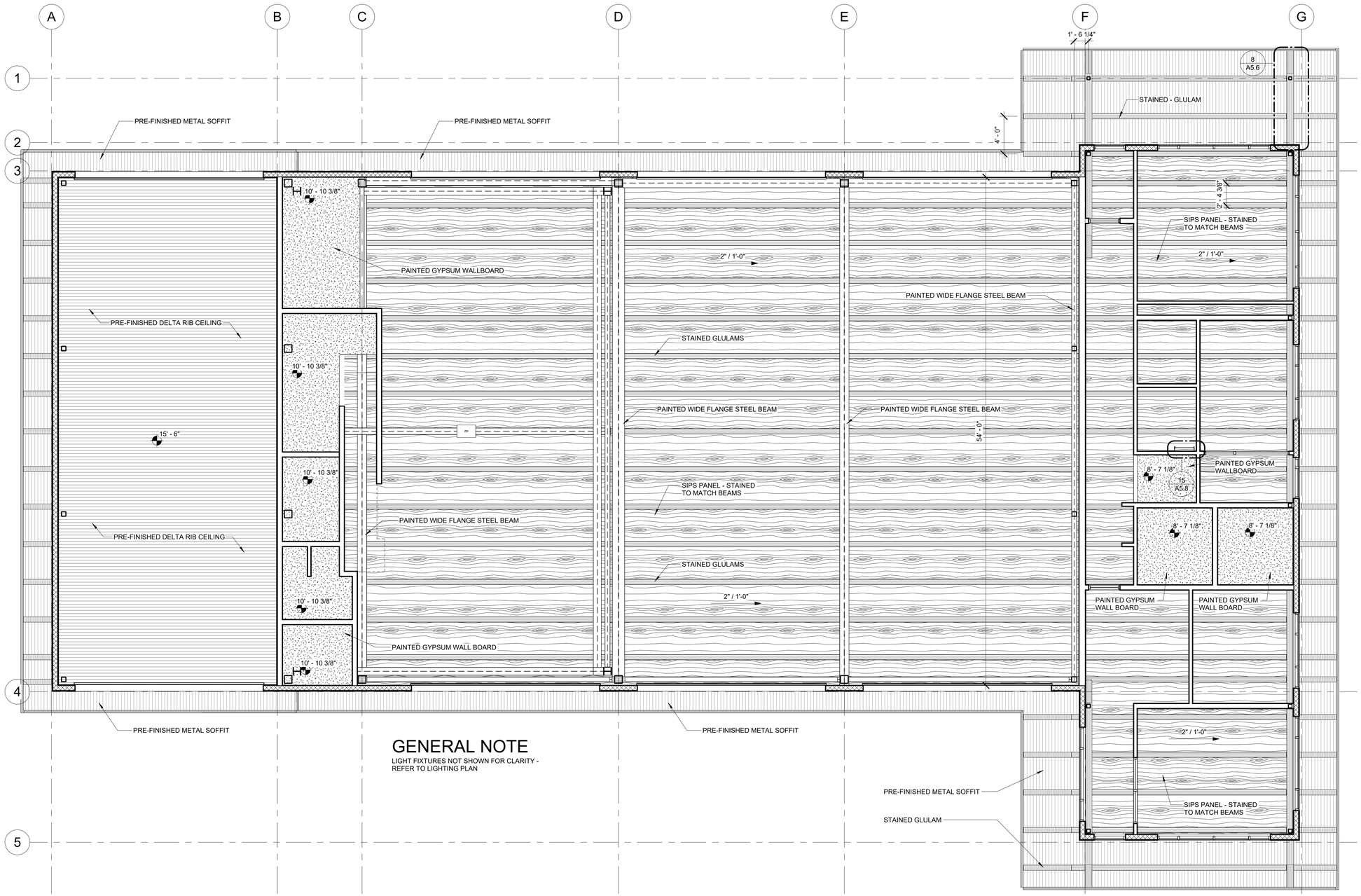

GENERAL NOTE

LIGHT FIXTURES NOT SHOWN FOR CLARITY - REFER TO LIGHTING PLAN

Level 1 Reflected Ceiling Plan

3/16" = 1'-0"

S:\ITD Powell Station\CD's\ITD Powell Station - Maintenance.rvt

2/17/2023 11:41:10 AM

MILLER STAUFFER ARCHITECTS
601 E. FRONT AVE. STE 201
COEUR D' ALENE, IDAHO 83814
P 208.664-1773 F 208.667.3174
WWW.MILLERSTAUFFER.COM

Reflected Ceiling Plan

Permit / Bid Set

2-17-2023

Powell Sta. Maintenance

Highway 12 @ Milepost 162.5
Powell Station, Idaho

LICENSED ARCHITECT
AR-984931
MICHEAL P. WALKER
STATE OF IDAHO

No.	Description	Date

PROJECT NUMBER 2206
PRINCIPAL Designer
PROJECT MANAGER Author

A2.2

SHEET KEYNOTES

1 BATTEN PRE-FINISHED STEEL ROOFING OVER SYTHETIC ROOFING UNDERLAYMENT

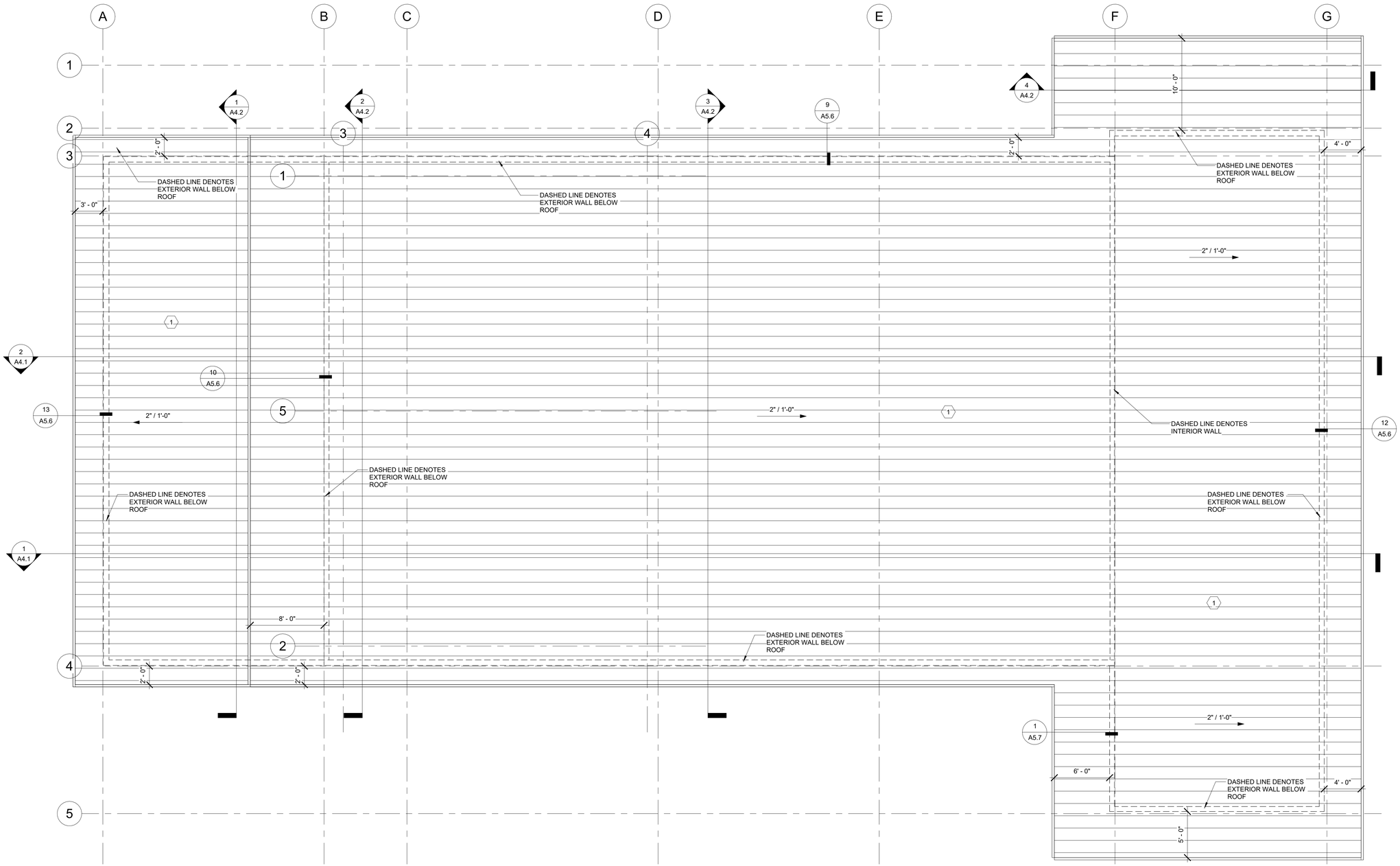

Roof Plan

3/16" = 1'-0"

MILLER STAUFFER ARCHITECTS
601 E. FRONT AVE. STE 201
COEUR D' ALENE, IDAHO 83814
P 208.664-1773 F 208.667.3174
WWW.MILLERSTAUFFER.COM

Roof Plan

Permit / Bid Set

2-17-2023

Powell Sta. Maintenance

Highway 12 @ Milepost 162.5

Powell Station, Idaho

LICENSED ARCHITECT AR-894931 MICHEAL P. WALKER STATE OF IDAHO

No.	Description	Date

PROJECT NUMBER 2206

PRINCIPAL Designer

PROJECT MANAGER Author

A2.3

2/17/2023 11:41:11 AM S:\ITD Powell Station\CD's\ITD Powell Station - Maintenance.rvt

SHEET KEYNOTES

1 FURNITURE BY OWNER - SHOWN ONLY FOR REFERENCE (NOT INCLUDED IN SCOPE OF WORK)
2 RESIDENTIAL REFRIGERATOR / FREEZER - SUPPLIED & INSTALLED BY OWNER
3 RESIDENTIAL ELECTRIC RANGE - SUPPLIED & INSTALLED BY OWNER
4 RESIDENTIAL OVER THE RANGE EXHAUST HOOD - REFER TO MECHANICAL SHEETS.
5 FREESTANDING COMMERCIAL ICE-MACHINE SUPPLIED BY OWNER & INSTALLED BY CONTRACTOR
6 28"x28" COMMERCIAL FLOOR MOUNTED SERVICE SINK - REFER TO PLUMBING FIXTURE SCHEDULE
7 36" DUAL BASIN STAINLESS STEEL SELF-RIMMING KITCHEN SINK - REFER TO PLUMBING FIXTURE SCHEDULE
8 SWING DOOR - REFER TO DOOR SCHEDULE & TYPES
9 1 1/2" PLASTIC-LAMINATE CLAD COUNTERTOP - MEDIUM GRADE - MEDIUM PRICE GROUP W/ 3/4" EASED EDGE WOOD BANDING
10 WALL MOUNTED LAVATORY W/ ANSI COMPLIANT PIPE & DRAIN PROTECTION (+34" MAX. A.F.F.)
11 COMMERCIAL FLOOR MOUNTED TANKED WATER CLOSET - REFER TO PLUMBING FIXTURE SCHEDULE
12 HIGH-LOW DRINKING FOUNTAIN - REFER TO PLUMBING FIXTURE SCHEDULE
13 WALL MOUNTED DATA COMMUNICATIONS RACK
14 ALUMINUM FRAMED STOREFRONT - REFER TO WINDOW TYPES
15 6"X6"X60" SQUARE CONCRETE FILLED BOLLARD W/ PAINTED FINISH & WHITE PAINT STRIPE
16 PAINTED EXPOSED STRUCTURAL STEEL COLUMN - REFER TO STRUCTURAL
17 CONCEALED STRUCTURAL STEEL COLUMN W/ SHOP PRIMER FINISH - REFER TO STRUCTURAL
18 OVERHEAD INSULATED SECTIONAL DOOR W/ AUTOMATIC DOOR OPENER - REFER TO DOOR SCHEDULE & TYPES
19 42" ANSI COMPLIANT GRAB BARS WITH PEENED FINISH & CONCEALED FASTENERS
20 18" ANSI COMPLIANT GRAB BARS WITH PEENED FINISH & CONCEALED FASTENERS
21 36" ANSI COMPLIANT GRAB BARS WITH PEENED FINISH & CONCEALED FASTENERS

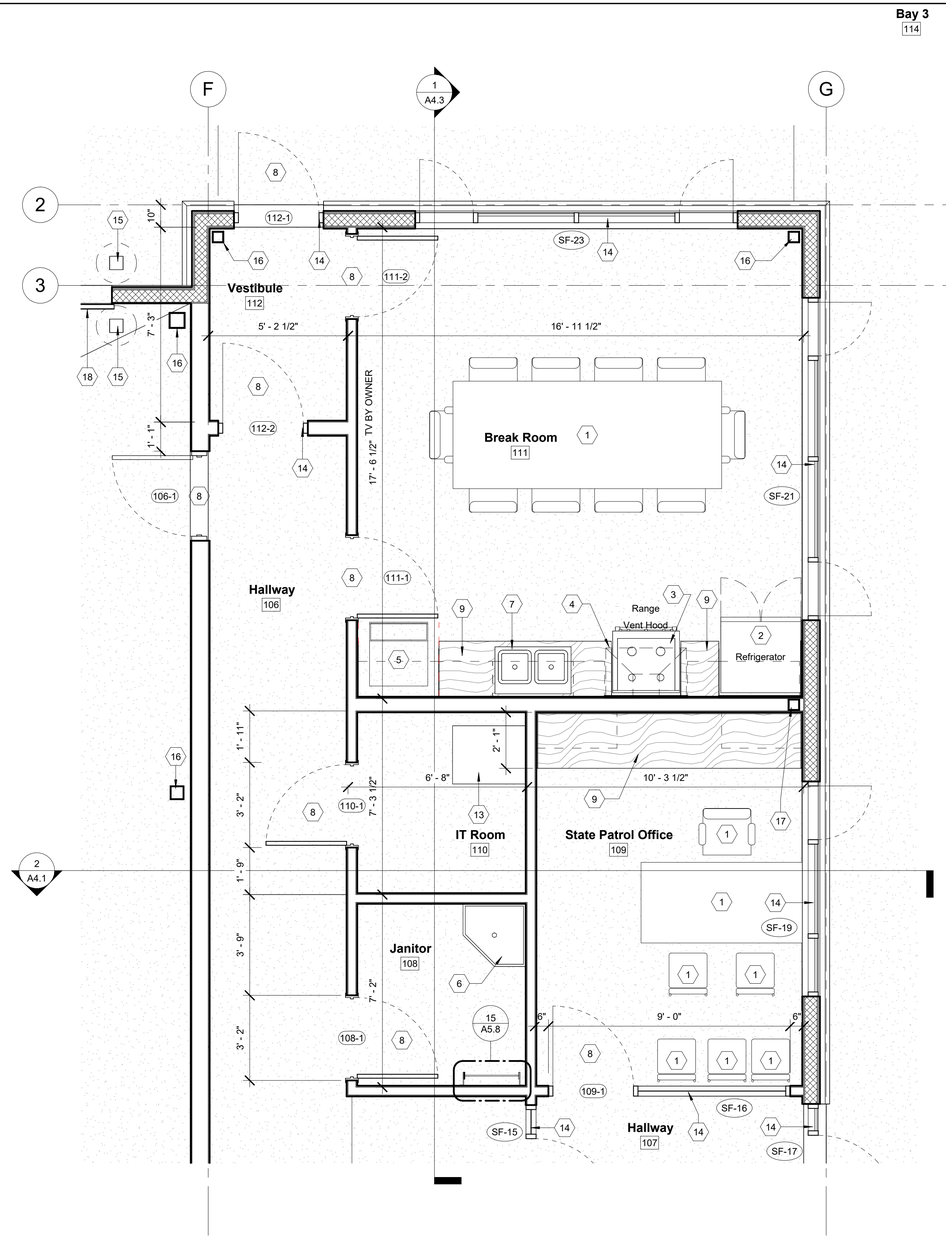

1 Lvl 1 Enlarged Plan - Office North
3/8" = 1'-0"

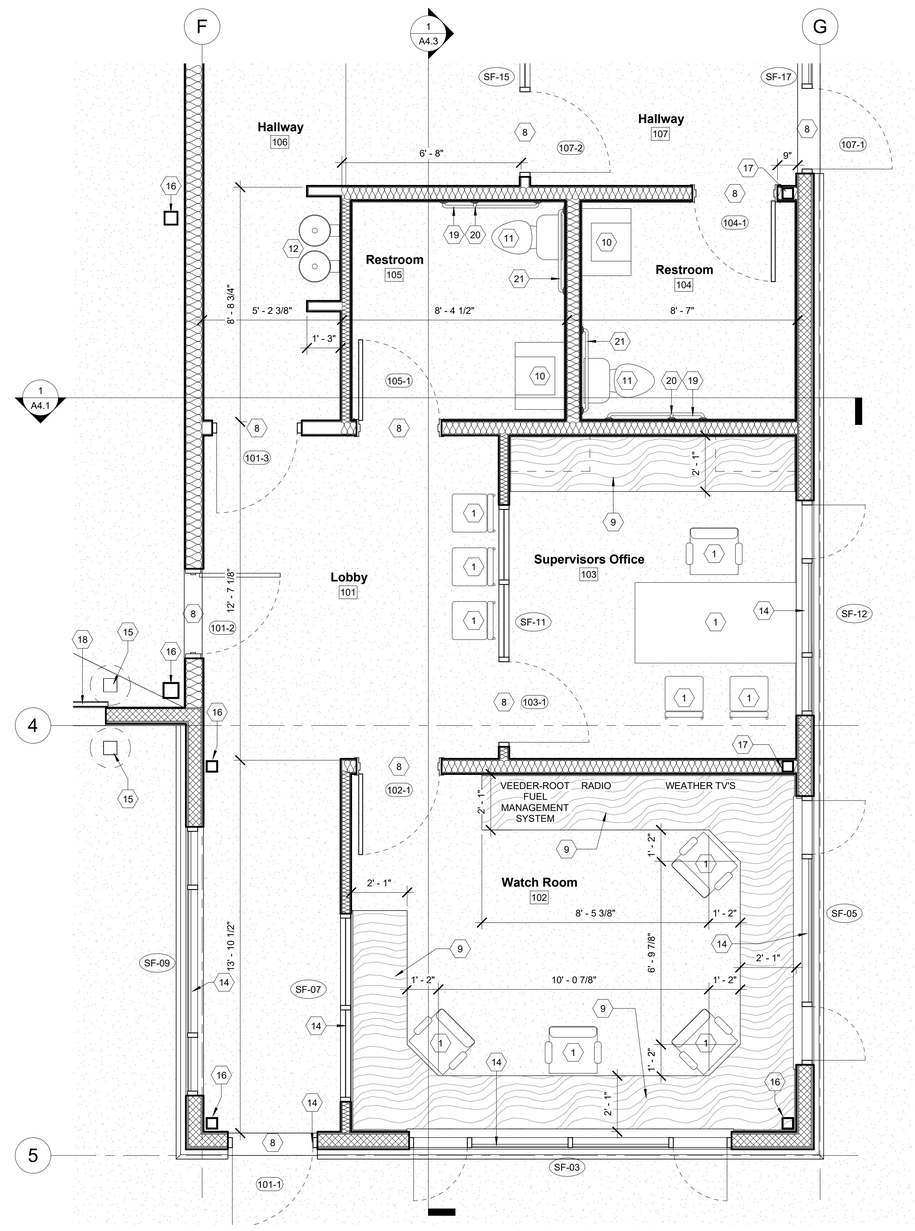

2 Lvl 1 Enlarged Plan - Office South
3/8" = 1'-0"

MILLER STAUFFER ARCHITECTS
601 E. FRONT AVE. STE 201
COEUR D' ALENE, IDAHO 83814
P 208.664-1773 F 208.667.3174
WWW.MILLERSTAUFFER.COM

Enlarged Floor Plans
Permit / Bid Set
2-17-2023

Powell Sta. Maintenance
Highway 12 @ Milepost 162.5
Powell Station, Idaho

LICENSED ARCHITECT AR-894931 MICHEAL P. WALKER STATE OF IDAHO

No.	Description	Date

PROJECT NUMBER 2206
PRINCIPAL Designer
PROJECT MANAGER Author

A2.4

S:\ITD Powell Station\CD's\ITD Powell Station - Maintenance.rvt
2/17/2023 11:41:13 AM

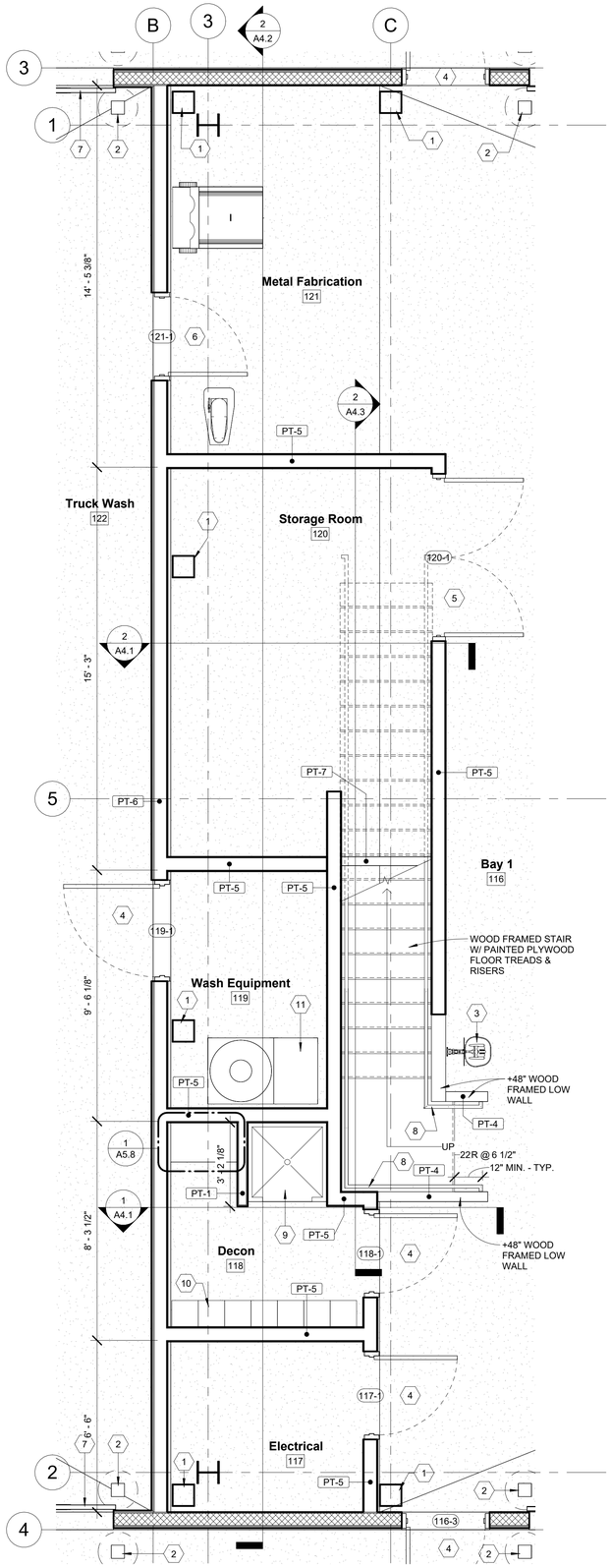

1 Lvl 1 Enlarged Plan - Vehicle Support Area

3/8" = 1'-0"

SHEET KEYNOTES

1 PAINTED EXPOSED STRUCTURAL STEEL COLUMN - REFER TO STRUCTURAL
2 6"X6"X60" SQUARE CONCRETE FILLED BOLLARD W/ PAINTED FINISH & WHITE PAINT STRIPE
3 EMERGENCY EYE/FACE WASH STATION - REFER TO PLUMBING FIXTURE SCHEDULE
4 INSULATED STEEL DOOR IN THERMALLY BROKEN HOLLOW METAL FRAME - REFER TO DOOR SCHEDULE & TYPES
5 HOLLOW METAL DOOR AND FRAME - REFER TO DOOR SCHEDULE & TYPES
6 SWING DOOR - REFER TO DOOR SCHEDULE & TYPES
7 OVERHEAD INSULATED SECTIONAL DOOR W/ AUTOMATIC DOOR OPENER - REFER TO DOOR SCHEDULE & TYPES
8 1 1/4" PIPE HANDRAIL W/ WALL RETURNS - PAINTED FINISH (ANSI COMPLIANT)
9 EMERGENCY SHOWER - REFER TO PLUMBING FIXTURE SCHEDULE
10 12" x 12" METAL STORAGE LOCKERS - SUPPLIED & INSTALLED BY OWNER - SHOWN ONLY FOR REFERENCE
11 BUILT-IN INDUSTRIAL PRESSURE WASHER - OWNER SUPPLIED & CONTRACTOR INSTALLED

MILLER STAUFFER ARCHITECTS
601 E. FRONT AVE. STE 201
COEUR D' ALENE, IDAHO 83814
P 208.664-1773 F 208.667.3174
WWW.MILLERSTAUFFER.COM

Enlarged Floor Plan

Permit / Bid Set

2-17-2023

Powell Sta. Maintenance

Highway 12 @ Milepost 162.5
Powell Station, Idaho

LICENSED ARCHITECT
AR-894931
MICHEAL P. WALKER
STATE OF IDAHO

No.	Description	Date

PROJECT NUMBER 2206
PRINCIPAL Designer
PROJECT MANAGER Author

A2.5

2/17/2023 11:41:14 AM S:\ITD Powell Station\CD's\ITD Powell Station - Maintenance.rvt

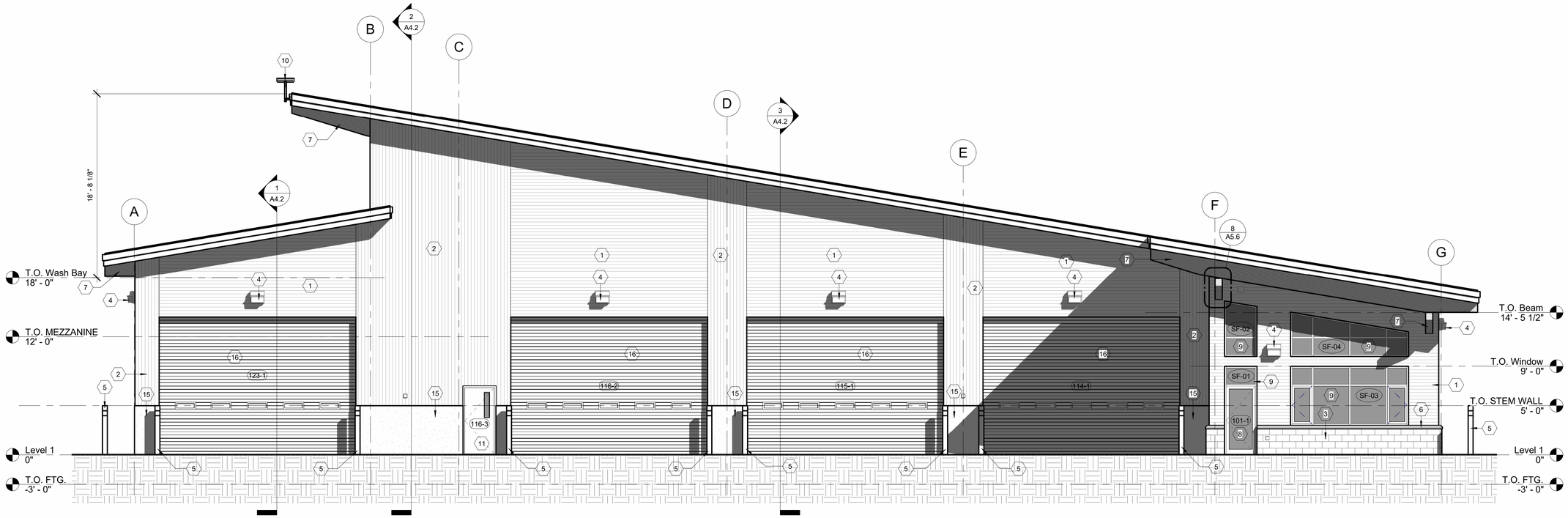

South Exterior Elevation

3/16" = 1'-0"

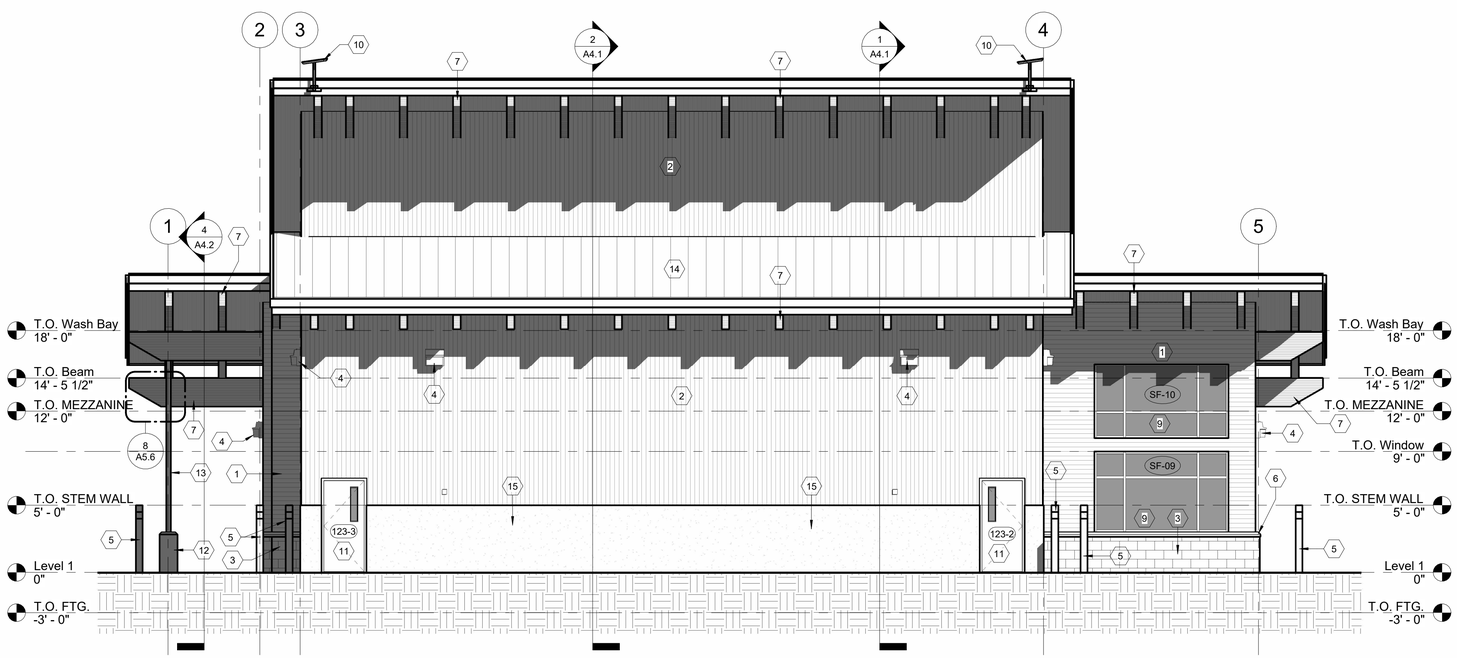

West Exterior Elevation

3/16" = 1'-0"

SHEET KEYNOTES

1. PRE-FINISHED EXPOSED FASTENER STEEL SIDING
2. EXPOSED FASTENER PRE-FINISHED STANDARD COLORED DELTA RIB STEEL SIDING - INSTALLED VERTICAL (COLOR TBD)
3. 4"X8"X16" STANDARD COLORED CONCRETE MASONRY UNIT
4. EXTERIOR WALL PACK LIGHTING - REFER TO LIGHTING PLAN & SCHEDULE
5. 6"X6"X60" SQUARE CONCRETE FILLED BOLLARD W/ PAINTED FINISH & WHITE PAINT STRIPE
6. PRECAST INTEGRAL COLORED ARCHITECTURAL CONCRETE WATERSILL
7. STAINED ROUGH SAWN GLULAM BEAM W/ CUT ENDS AS SHOWN - REFER TO STRUCTURAL
8. SWING DOOR - REFER TO DOOR SCHEDULE & TYPES
9. ALUMINUM FRAMED STOREFRONT - REFER TO WINDOW TYPES
10. STARLINK INTERNET ANTENNA - SUPPLIED BY OWNER & INSTALLED BY OWNER - CONTRACTOR TO INSTALL MOUNT (MOUNT TO BE GROUNDED)
11. INSULATED STEEL DOOR IN THERMALLY BROKEN HOLLOW METAL FRAME - REFER TO DOOR SCHEDULE & TYPES
12. CAST-IN-PLACE STANDARD GRAY CONCRETE PIER - REFER TO STRUCTURAL
13. PAINTED EXPOSED STRUCTURAL STEEL COLUMN - REFER TO STRUCTURAL
14. BATTEN PRE-FINISHED STEEL ROOFING OVER SYTHETIC ROOFING UNDERLAYMENT
15. EXPOSED STANDARD GRAY CONCRETE STEM WALL WITH PENETRATING SILCONE SEALER
16. OVERHEAD INSULATED SECTIONAL DOOR W/ AUTOMATIC DOOR OPENER - REFER TO DOOR SCHEDULE & TYPES

MILLER STAUFFER ARCHITECTS
801 E. FRONT AVE. STE 201
COEUR D' ALENE, IDAHO 83814
P 208.664-1773 F 208.667.3174
WWW.MILLERSTAUFFER.COM

Exterior Elevations
Permit / Bid Set
2-17-2023

Powell Sta. Maintenance
Highway 12 @ Milepost 162.5
Powell Station, Idaho

LICENSED ARCHITECT AR-984931 MICHEAL P. WALKER STATE OF IDAHO

No.	Description	Date

PROJECT NUMBER 2206
PRINCIPAL Designer
PROJECT MANAGER Author

A3.1

2/17/2023 11:41:21 AM S:\ITD Powell Station\CD's\ITD Powell Station - Maintenance.rvt

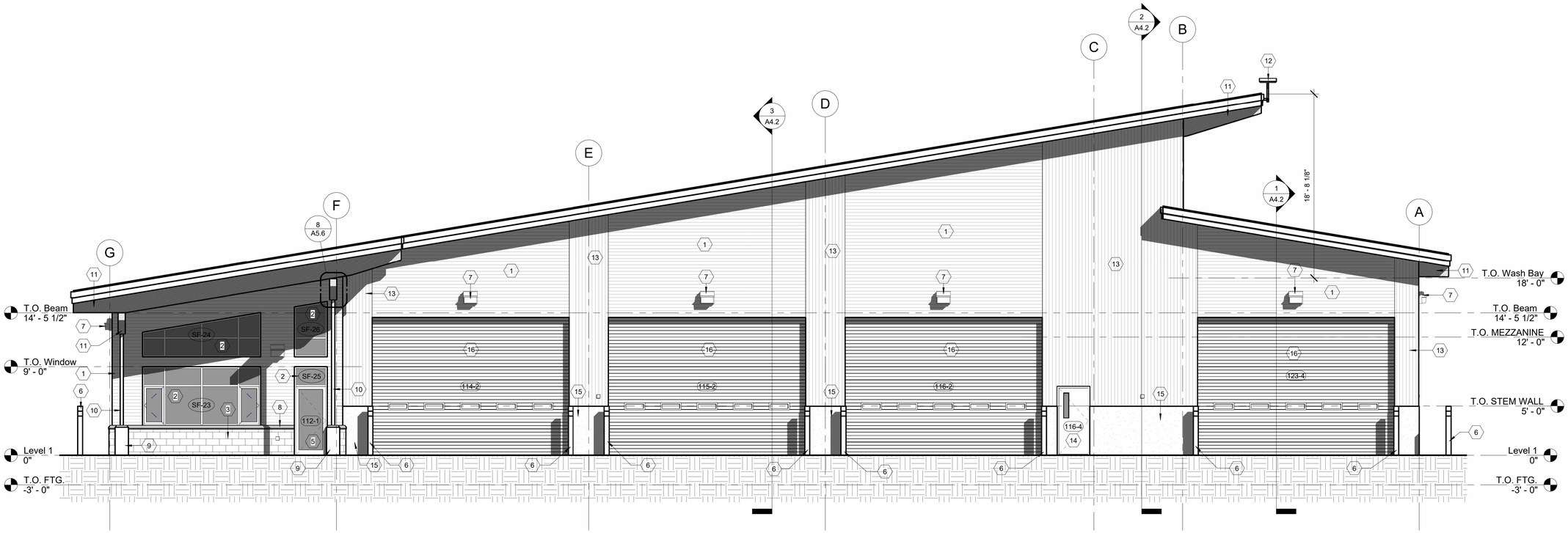

North Exterior Elevation

3/16" = 1'-0"

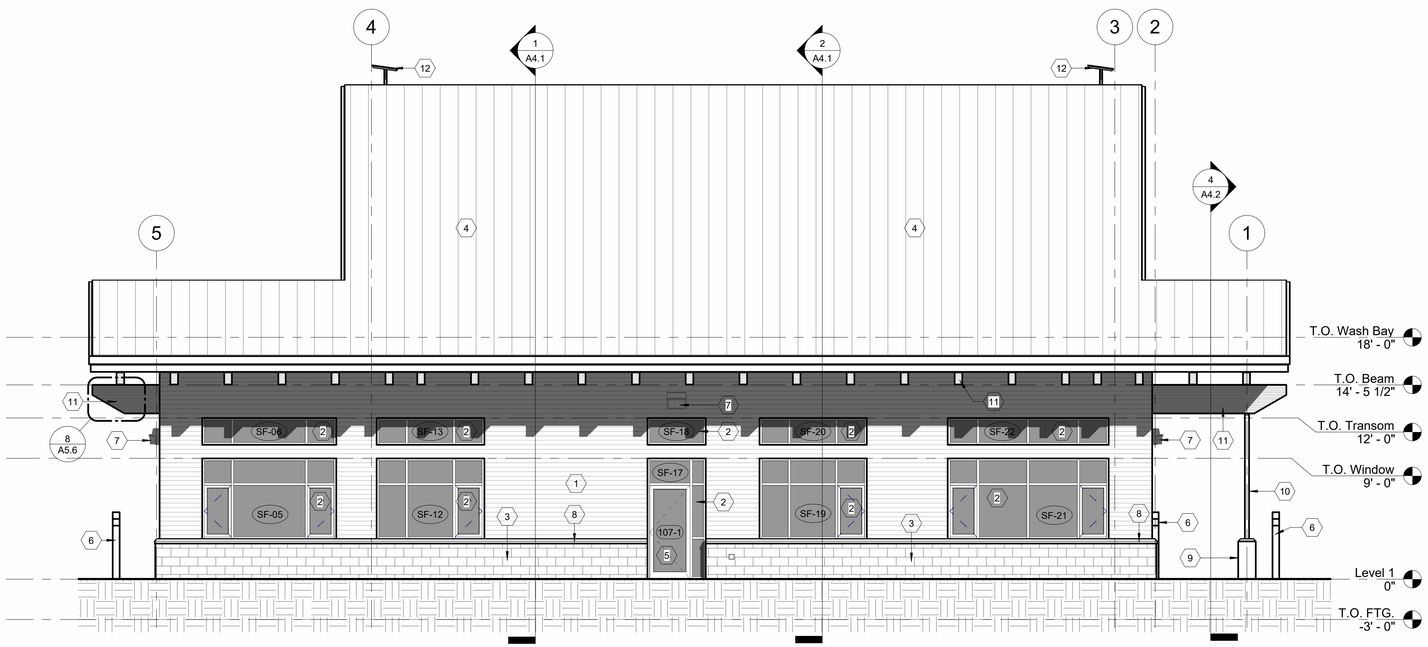

East Exterior Elevation

3/16" = 1'-0"

SHEET KEYNOTES

1. PRE-FINISHED EXPOSED FASTENER STEEL SIDING
2. ALUMINUM FRAMED STOREFRONT - REFER TO WINDOW TYPES
3. 4"X8"X16" STANDARD COLORED CONCRETE MASONRY UNIT
4. BATTEN PRE-FINISHED STEEL ROOFING OVER SYTHETIC ROOFING UNDERLAYMENT
5. SWING DOOR - REFER TO DOOR SCHEDULE & TYPES
6. 6"X6"X60" SQUARE CONCRETE FILLED BOLLARD W/ PAINTED FINISH & WHITE PAINT STRIPE
7. EXTERIOR WALL PACK LIGHTING - REFER TO LIGHTING PLAN & SCHEDULE
8. PRECAST INTEGRAL COLORED ARCHITECTURAL CONCRETE WATERSILL
9. CAST-IN-PLACE STANDARD GRAY CONCRETE PIER - REFER TO STRUCTURAL
10. PAINTED EXPOSED STRUCTURAL STEEL COLUMN - REFER TO STRUCTURAL
11. STAINED ROUGH SAWN GLULAM BEAM W/ CUT ENDS AS SHOWN - REFER TO STRUCTURAL
12. STARLINK INTERNET ANTENNA - SUPPLIED BY OWNER & INSTALLED BY OWNER - CONTRACTOR TO INSTALL MOUNT (MOUNT TO BE GROUNDED)
13. EXPOSED FASTENER PRE-FINISHED STANDARD COLORED DELTA RIB STEEL SIDING - INSTALLED VERTICAL (COLOR TBD)
14. INSULATED STEEL DOOR IN THERMALLY BROKEN HOLLOW METAL FRAME - REFER TO DOOR SCHEDULE & TYPES
15. EXPOSED STANDARD GRAY CONCRETE STEM WALL WITH PENETRATING SILCONE SEALER
16. OVERHEAD INSULATED SECTIONAL DOOR W/ AUTOMATIC DOOR OPENER - REFER TO DOOR SCHEDULE & TYPES

MILLER STAUFFER ARCHITECTS
601 E. FRONT AVE. STE 201
COEUR D' ALENE, IDAHO 83814
P 208.664-1773 F 208.667.3174
WWW.MILLERSTAUFFER.COM

Exterior Elevations

Permit / Bid Set

2-17-2023

Powell Sta. Maintenance

Highway 12 @ Milepost 162.5
Powell Station, Idaho

LICENSED ARCHITECT AR-984931 MICHEAL P. WALKER STATE OF IDAHO

No.	Description	Date

PROJECT NUMBER 2206
PRINCIPAL Designer
PROJECT MANAGER Author

A3.2

S:\ITD Powell Station\CD's\ITD Powell Station - Maintenance.rvt

2/17/2023 11:41:29 AM

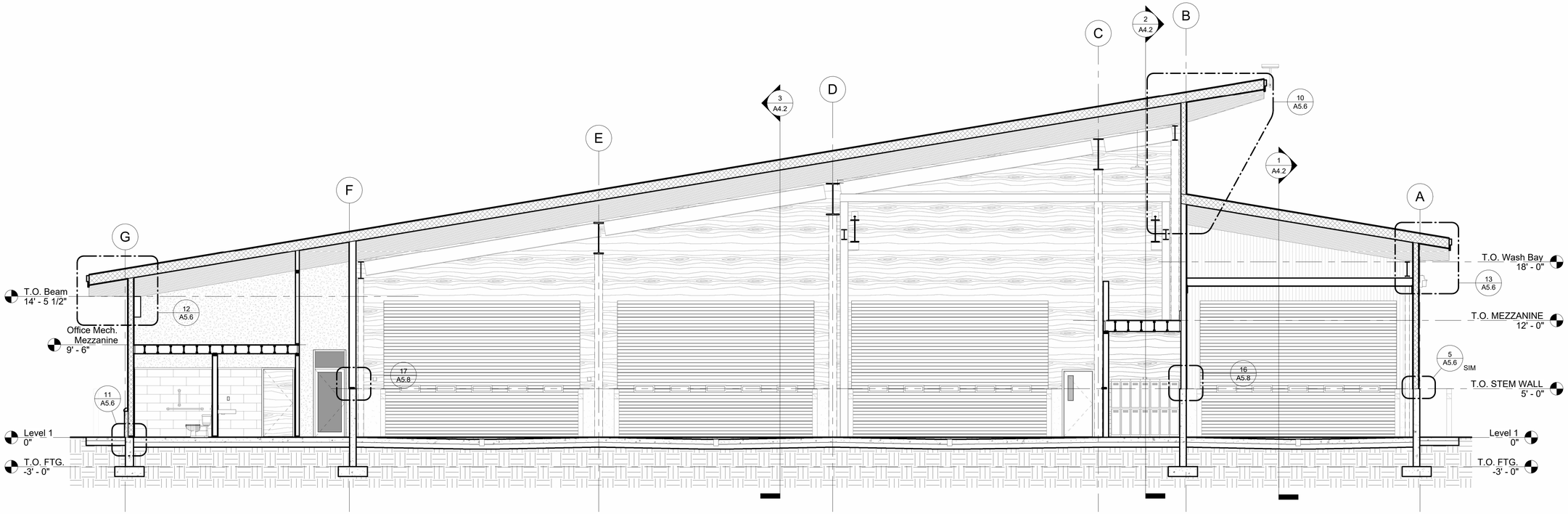

1 Building Section A

3/16" = 1'-0"

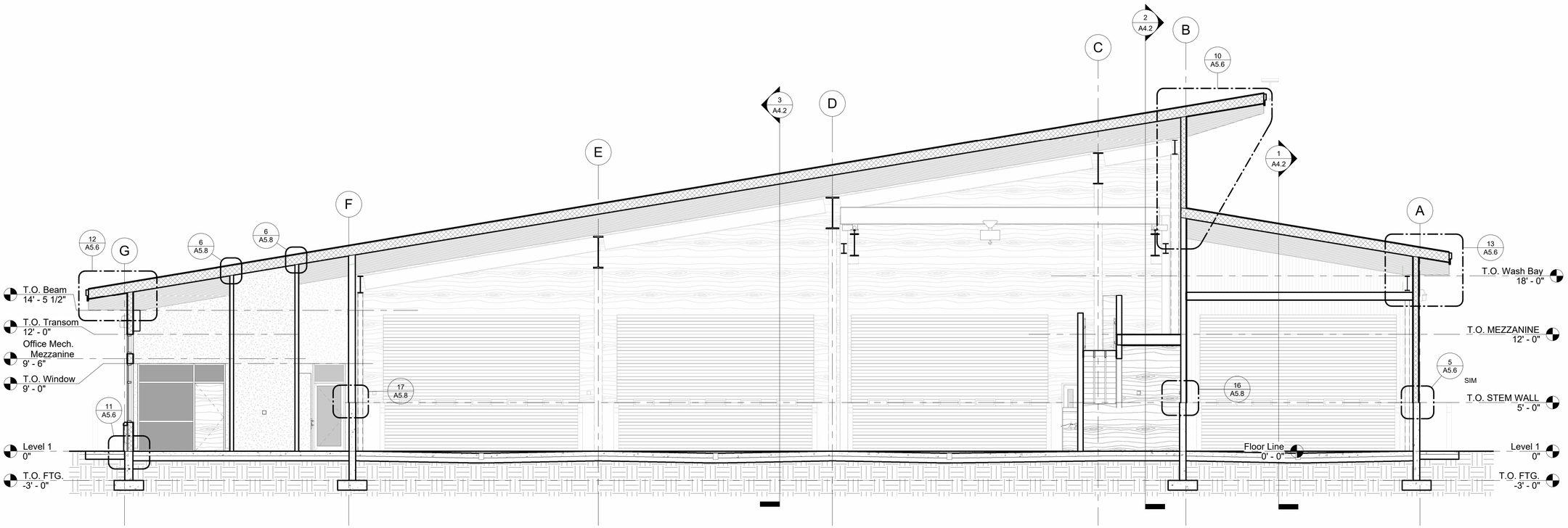

2 Building Section B

3/16" = 1'-0"

MILLER STAUFFER ARCHITECTS
601 E. FRONT AVE. STE 201
COEUR D' ALENE, IDAHO 83814
P 208.664-1773 F 208.667.3174
WWW.MILLERSTAUFFER.COM

Building Sections

Permit / Bid Set

2-17-2023

Powell Sta. Maintenance

Highway 12 @ Milepost 162.5

Powell Station, Idaho

LICENSED ARCHITECT AR-984931 MICHEAL P. WALKER STATE OF IDAHO

No.	Description	Date

PROJECT NUMBER 2206

PRINCIPAL Designer

PROJECT MANAGER Author

A4.1

2/17/2023 11:41:35 AM S:\ITD Powell Station\CD's\ITD Powell Station - Maintenance.rvt

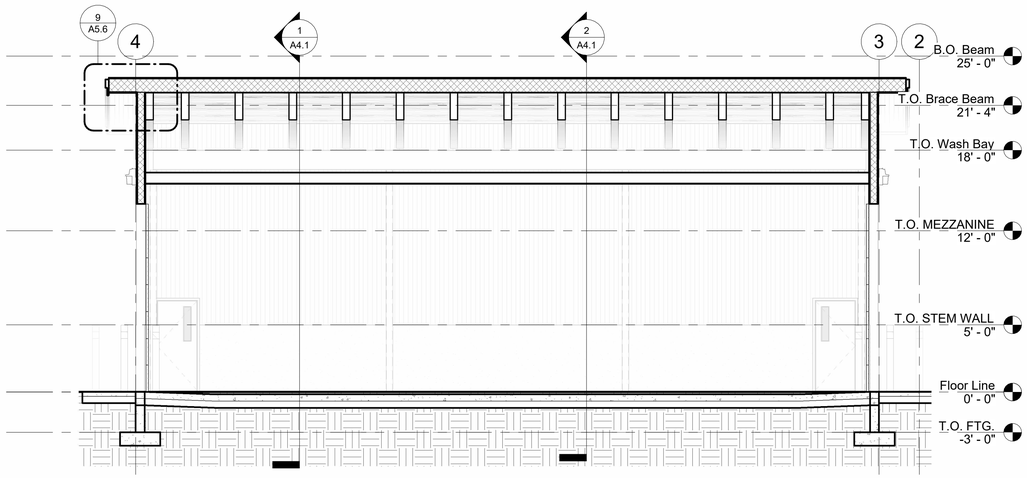

1 Building Section C
3/16" = 1'-0"

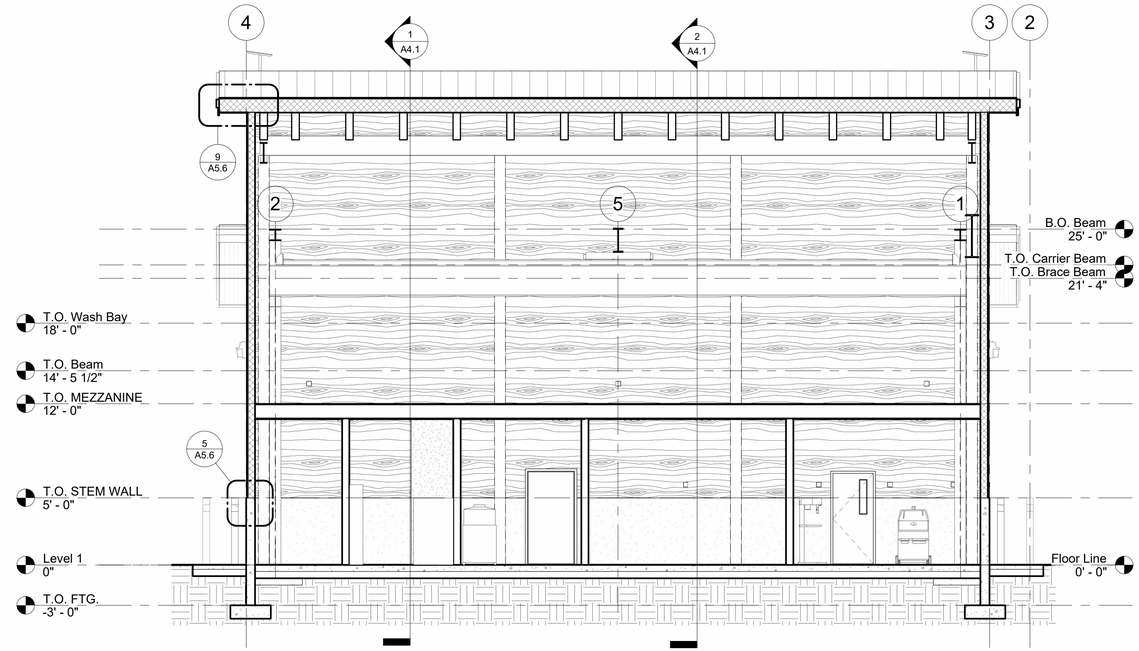

2 Building Section D
3/16" = 1'-0"

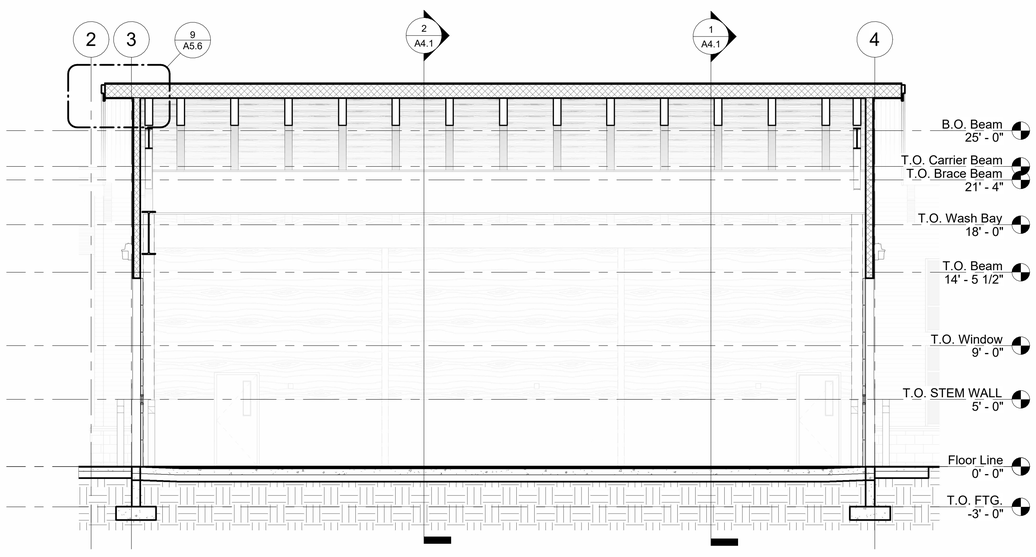

3 Building Section E
3/16" = 1'-0"

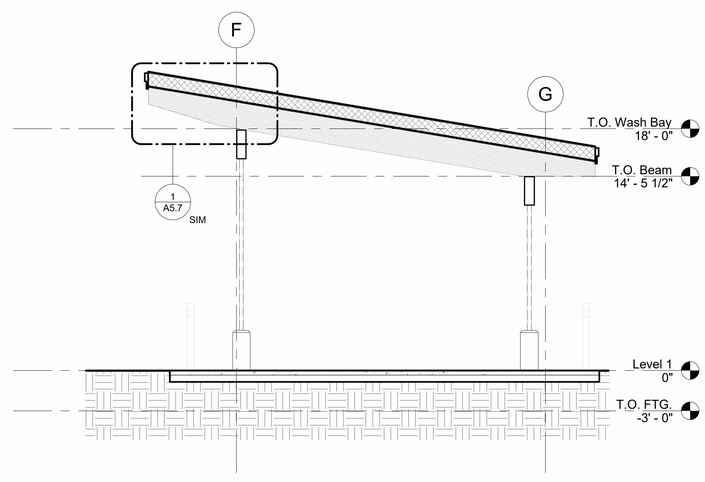

4 Building Section F
3/16" = 1'-0"

MILLER STAUFFER ARCHITECTS
601 E. FRONT AVE. STE 201
COEUR D' ALENE, IDAHO 83814
P 208.664-1773 F 208.667.3174
WWW.MILLERSTAUFFER.COM

Building Sections
Permit / Bid Set
2-17-2023

Powell Sta. Maintenance
Highway 12 @ Milepost 162.5
Powell Station, Idaho

LICENSED ARCHITECT
AR-984931
MICHEAL P. WALKER
(STATE OF IDAHO)

No.	Description	Date

PROJECT NUMBER 2206
PRINCIPAL Designer
PROJECT MANAGER Author

A4.2

2/17/2023 11:41:43 AM S:\ITD Powell Station\CD's\ITD Powell Station - Maintenance.rvt

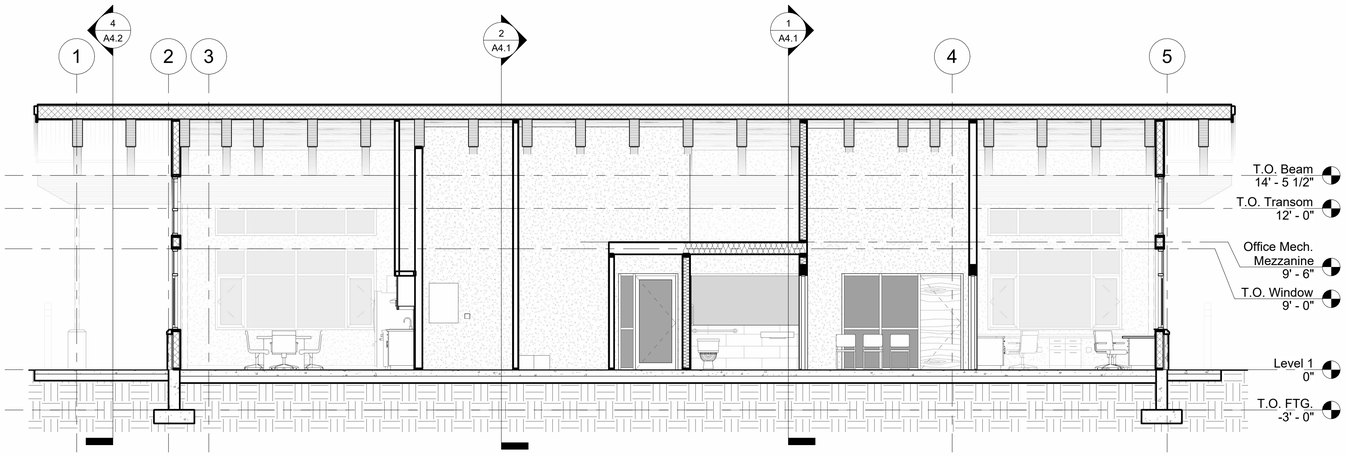

1 Building Section G
3/16" = 1'-0"

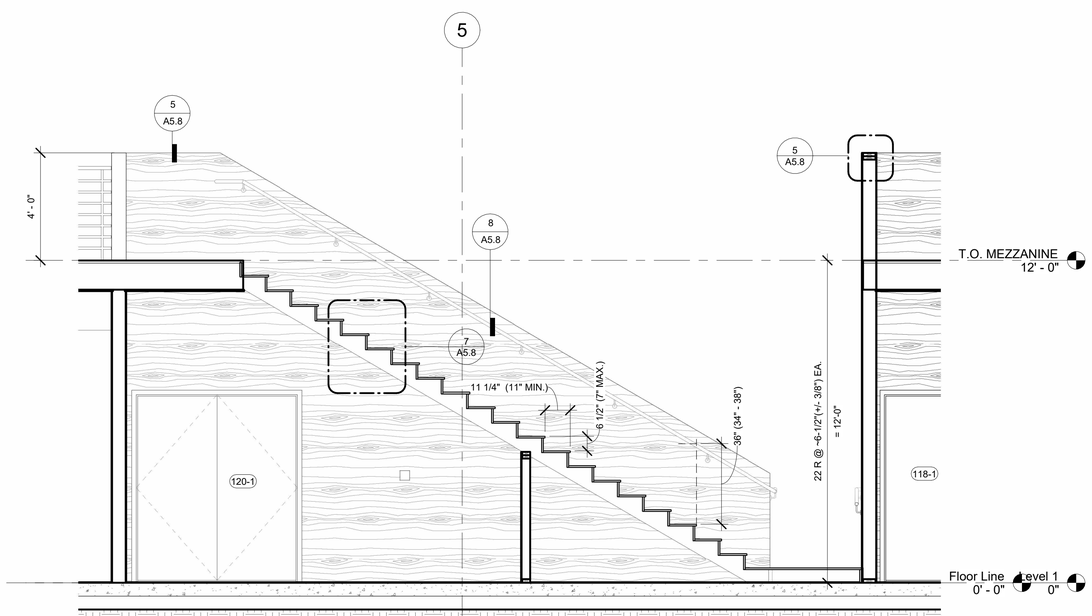

2 Stair Section
3/8" = 1'-0"

2/17/2023 11:41:48 AM S:\ITD Powell Station\CD's\ITD Powell Station - Maintenance.rvt

MILLER STAUFFER ARCHITECTS
601 E. FRONT AVE. STE 201
COEUR D' ALENE, IDAHO 83814
P 208.664-1773 F 208.667.3174
WWW.MILLERSTAUFFER.COM

Building Sections
Permit / Bid Set
2-17-2023

LICENSED ARCHITECT
AR-984931
MICHEAL P. WALKER
STATE OF IDAHO

Powell Sta. Maintenance
Highway 12 @ Milepost 162.5
Powell Station, Idaho

No.	Description	Date

PROJECT NUMBER 2206
PRINCIPAL Designer
PROJECT MANAGER Author

A4.3

ROOF TYPES

1 1/2" = 1'-0"

RF-1

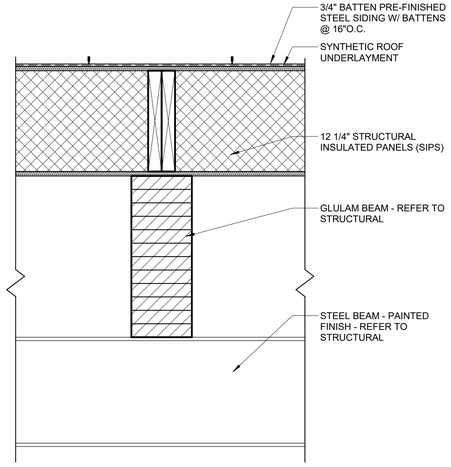

RF-2

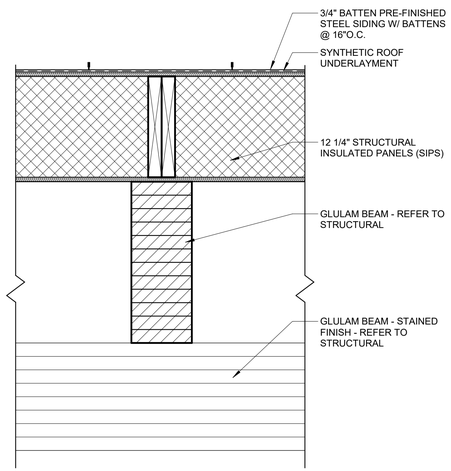

RF-3

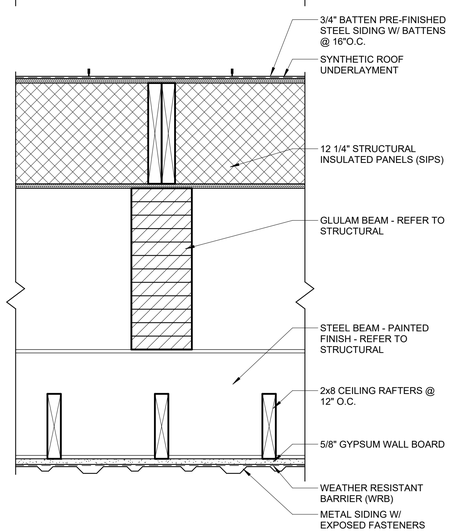

FLOOR TYPES

1 1/2" = 1'-0"

FLR-1

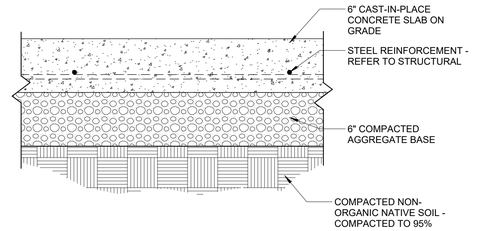

FLR-2

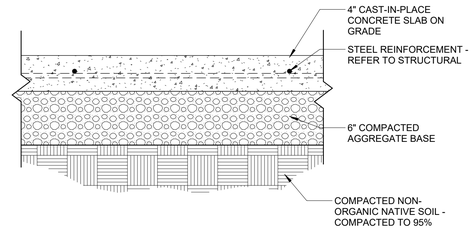

FLR-3

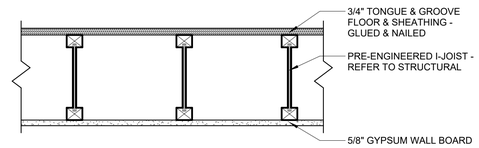

WALL TYPES

1 1/2" = 1'-0"

EXTERIOR WALLS

WT-1

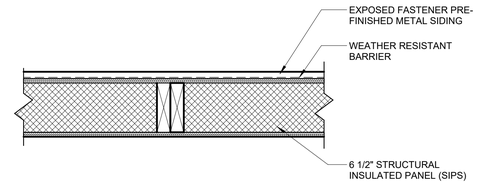

WT-2

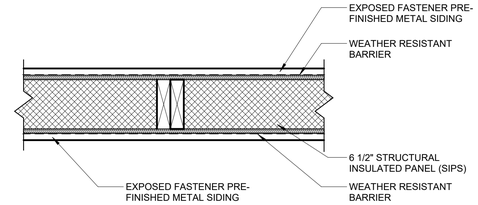

WT-3A

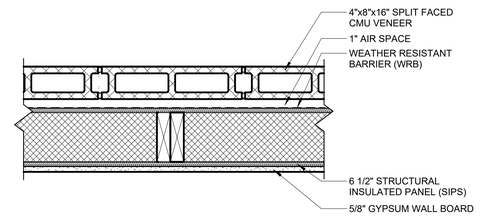

WT-3B

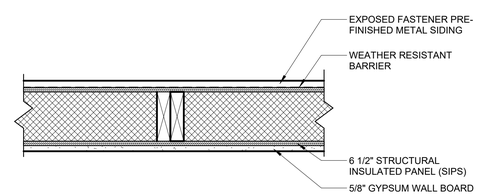

WT-4

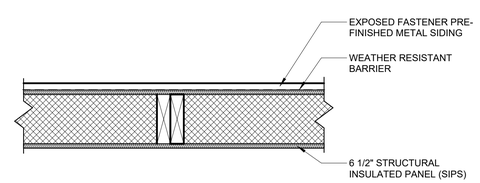

INTERIOR WALLS

PT-1

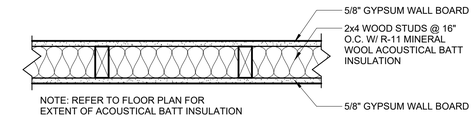

PT-2

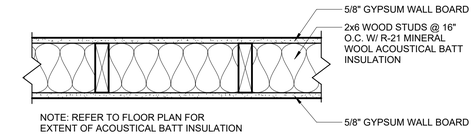

PT-3

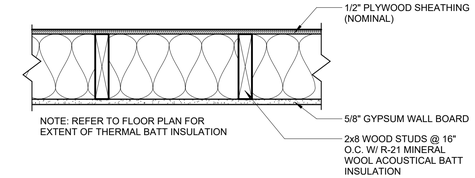

PT-4

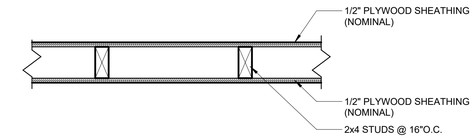

PT-5

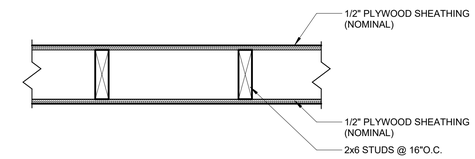

PT-6

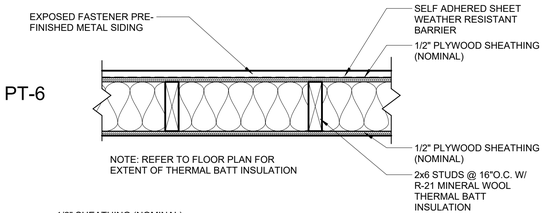

PT-7

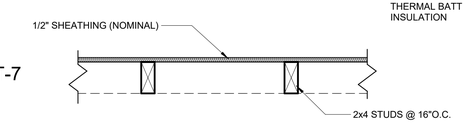

MILLER STAUFFER ARCHITECTS
601 E. FRONT AVE. STE 201
COEUR D' ALENE, IDAHO 83814
P 208.664-1773 F 208.667.3174
WWW.MILLERSTAUFFER.COM

Assembles

Permit / Bid Set

2-17-2023

Powell Sta. Maintenance

Highway 12 @ Milepost 162.5

Powell Station, Idaho

LICENSED ARCHITECT AR-984931 MICHEAL P. WALKER STATE OF IDAHO

No.	Description	Date

PROJECT NUMBER 2206

PRINCIPAL Designer

PROJECT MANAGER Author

A5.1

2/17/2023 11:41:50 AM S:\ITD Powell Station\CD's\ITD Powell Station - Maintenance.rvt

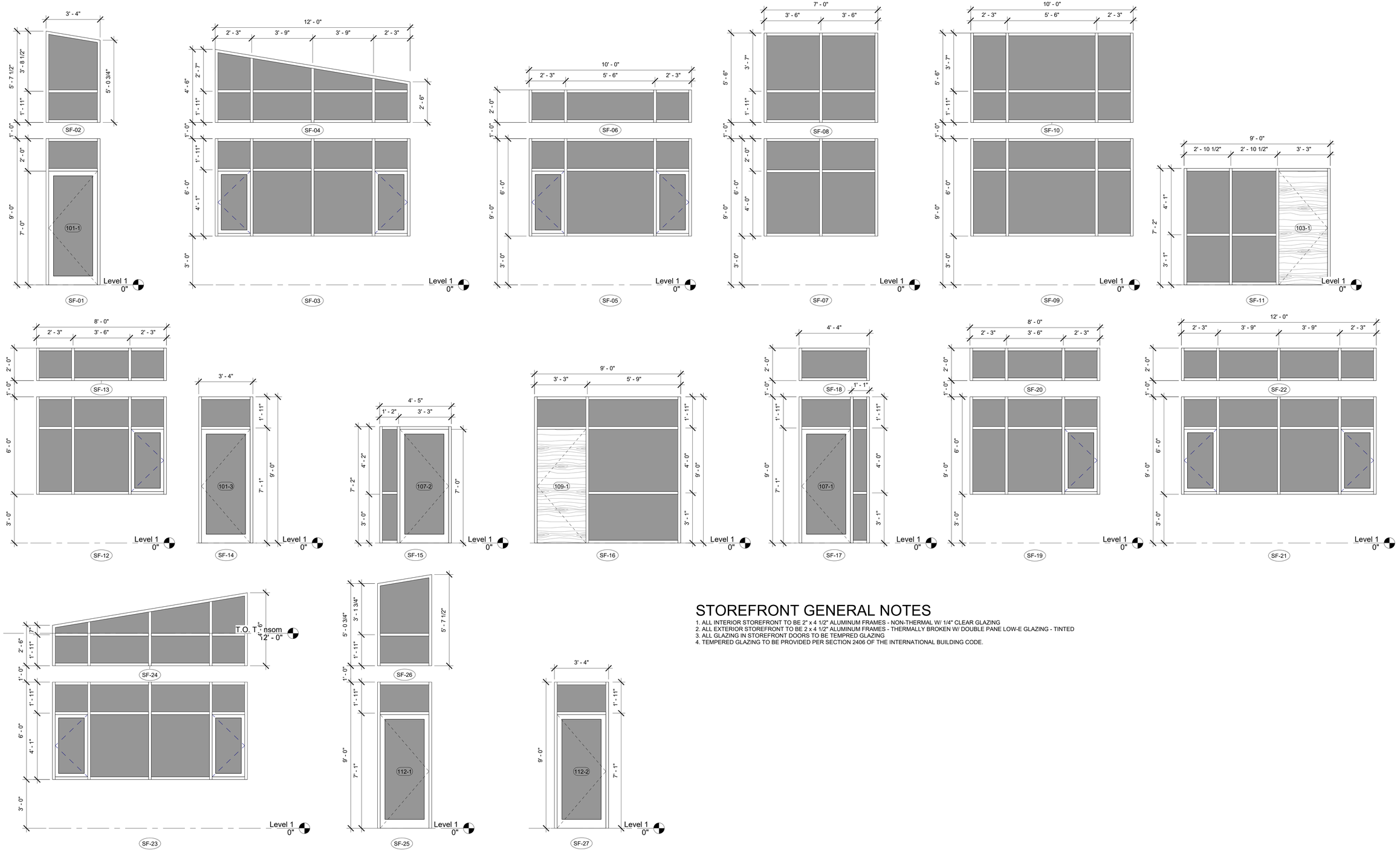

STOREFRONT GENERAL NOTES

1. ALL INTERIOR STOREFRONT TO BE 2" x 4 1/2" ALUMINUM FRAMES - NON-THERMAL W/ 1/4" CLEAR GLAZING
2. ALL EXTERIOR STOREFRONT TO BE 2 x 4 1/2" ALUMINUM FRAMES - THERMALLY BROKEN W/ DOUBLE PANE LOW-E GLAZING - TINTED
3. ALL GLAZING IN STOREFRONT DOORS TO BE TEMPRED GLAZING
4. TEMPERED GLAZING TO BE PROVIDED PER SECTION 2406 OF THE INTERNATIONAL BUILDING CODE.

1 WALL TYPES

3/8" = 1'-0"

MILLER STAUFFER ARCHITECTS
601 E. FRONT AVE. STE 201
COEUR D' ALENE, IDAHO 83814
P 208.664-1773 F 208.667.3174
WWW.MILLERSTAUFFER.COM

Storefront Elevations

Permit / Bid Set

2-17-2023

Powell Sta. Maintenance

Highway 12 @ Milepost 162.5
Powell Station, Idaho

LICENSED ARCHITECT
AR-894931
MICHEAL P. WALKER
STATE OF IDAHO

No.	Description	Date

PROJECT NUMBER 2206
PRINCIPAL Designer
PROJECT MANAGER Author

A5.2

S:\ITD Powell Station\CD's\ITD Powell Station - Maintenance.rvt

2/17/2023 11:41:52 AM

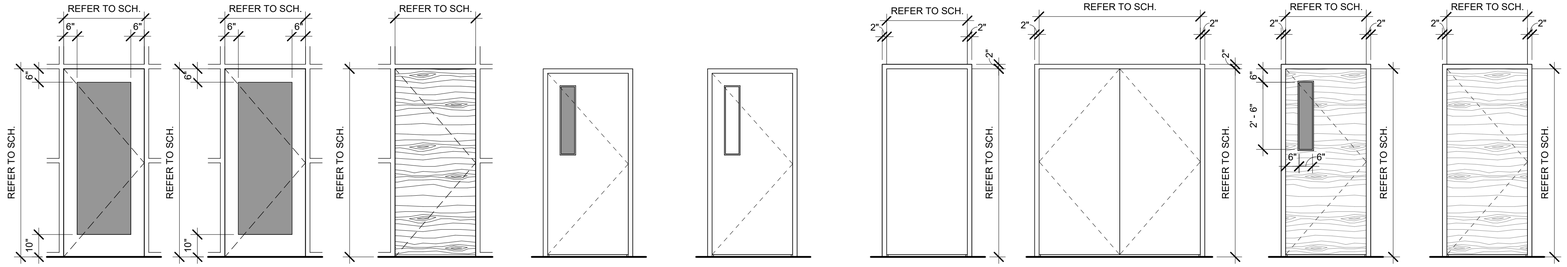

TYPE "I"
1 3/4" ALUM. STOREFRONT
EXTERIOR SWING ALUM. DOOR
THERMALLY BROKEN FRAME
GRAY TINTED LOW-E GLAZING

TYPE "II"
1 3/4" ALUM. STOREFRONT
INTERIOR SWING DOOR
CLEAR GLAZING

TYPE "III"
1 3/4" ALUM. STOREFRONT
INTERIOR FLUSH WOOD
SWING DOOR

TYPE "IV"
1 3/4" INSULATED
HOLLOW METAL DOOR
W/ VISION PANEL
THERMALLY BROKEN
HOLLOW METAL FRAME

TYPE "V"
1 3/4" HOLLOW METAL DOOR
W/ VISION PANEL
HOLLOW METAL FRAME

TYPE "VI"
1 3/4" HOLLOW METAL DOOR
HOLLOW METAL FRAME

TYPE "VII"
DBL1 3/4" HOLLOW METAL DOOR
HOLLOW METAL FRAME

TYPE "VIII"
1 3/4" SOLID CORE
WOOD DOOR
W/ VISION PANEL
HOLLOW METAL FRAME

TYPE "IX"
1 3/4" SOLID CORE
WOOD DOOR
HOLLOW METAL FRAME

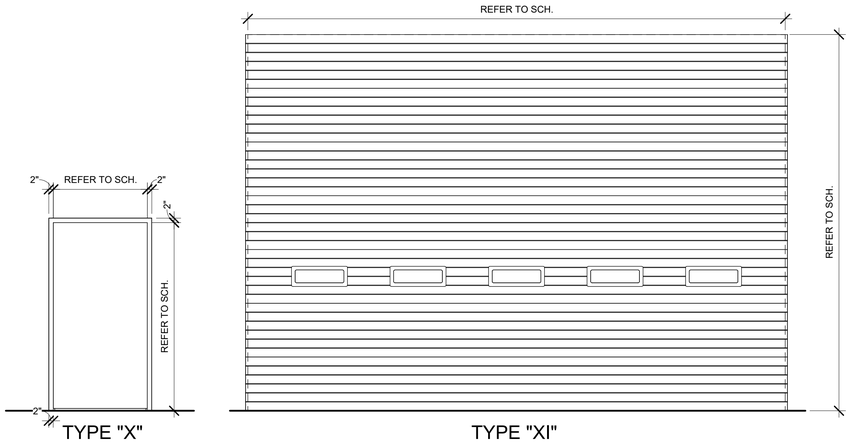

TYPE "X"
1 3/4" HOLLOW METAL DOOR
HOLLOW METAL FRAME

TYPE "XI"
OVERHEAD INSULATED
SECTION PANEL DOOR
W/ VISION WINDOWS

DOOR TYPES

3/8" = 1'-0"

DOOR SCHEDULE

TAG	TYPE	DOOR Door Size [WxH(T)]	DOOR MAT	DOOR FIN	FIRE RATING	HARDWARE	FRAME MAT	FRAME FIN	FRAME JAMB	FRAME HEAD	REMARKS
101-1	I	3' - 0" x 7' - 0" x 1 3/4"	ALUM.	CLEAR	0 HRS	A	ALUM.	CLEAR	8B-8C/A5.4	8A/A5.4	
101-2	V	3' - 0" x 7' - 0" x 1 3/4"	HM	PAINT	0 HRS	C	HM	PAINT	1B+1C/A5.4	1A/A5.4	
101-3	II	3' - 0" x 7' - 0" x 1 3/4"	ALUM.	CLEAR	0 HRS	J	ALUM.	CLEAR	9B/A5.4	9A/A5.4	
102-1	VIII	3' - 0" x 7' - 0" x 1 3/4"	WD	STAIN	0 HRS	D	HM	PAINT	2B/A5.4	2A/A5.4	
103-1	III	3' - 0" x 7' - 0" x 1 3/4"	ALUM.	CLEAR	0 HRS	D	ALUM.	CLEAR	9B/A5.4	9A/A5.4	
104-1	IX	3' - 0" x 7' - 0" x 1 3/4"	WD	STAIN	0 HRS	E	HM	PAINT	2B/A5.4	2A/A5.4	
105-1	IX	3' - 0" x 7' - 0" x 1 3/4"	WD	STAIN	0 HRS	E	HM	PAINT	2B/A5.4	2A/A5.4	
106-1	V	3' - 0" x 7' - 0" x 1 3/4"	HM	PAINT	0 HRS	G	HM	PAINT	1B+1C/A5.4	1A/A5.4	
107-1	I	3' - 0" x 7' - 0" x 1 3/4"	ALUM.	CLEAR	0 HRS	J	ALUM.	CLEAR	8B-8C/A5.4	8A/A5.4	
107-2	II	3' - 0" x 7' - 0" x 1 3/4"	ALUM.	CLEAR	0 HRS	B	ALUM.	CLEAR	9B/A5.4	9A/A5.4	
108-1	IX	3' - 0" x 7' - 0" x 1 3/4"	WD	STAIN	0 HRS	G	HM	PAINT	2B/A5.4	2A/A5.4	
109-1	III	3' - 0" x 7' - 0" x 1 3/4"	ALUM.	CLEAR	0 HRS	D	ALUM.	BLACK	9B/A5.4	9A/A5.4	
110-1	IX	3' - 0" x 7' - 0" x 1 3/4"	WD	STAIN	0 HRS	G	HM	PAINT	2B/A5.4	2A/A5.4	
111-1	VIII	3' - 0" x 7' - 0" x 1 3/4"	WD	STAIN	0 HRS	D	HM	PAINT	2B/A5.4	2A/A5.4	
111-2	VIII	3' - 0" x 7' - 0" x 1 3/4"	WD	STAIN	0 HRS	B	HM	PAINT	2B/A5.4	2A/A5.4	
112-1	I	3' - 0" x 7' - 0" x 1 3/4"	ALUM.	CLEAR	0 HRS	A	ALUM.	CLEAR	8B-8C/A5.4	8A/A5.4	
112-2	II	3' - 0" x 7' - 0" x 1 3/4"	ALUM.	CLEAR	0 HRS	J	ALUM.	CLEAR	9B/A5.4	9A/A5.4	
114-1	XI	20' - 0" x 14' - 0" x 3"	INSUL STL	PAINT	0 HRS	K	STL.	FF	1B+1C/A5.5	1A/A5.5	
114-2	XI	20' - 0" x 14' - 0" x 3"	INSUL STL	PAINT	0 HRS	K	STL.	FF	1B+1C/A5.5	1A/A5.5	
115-1	XI	20' - 0" x 14' - 0" x 3"	INSUL STL	PAINT	0 HRS	K	STL.	FF	1B+1C/A5.5	1A/A5.5	
115-2	XI	20' - 0" x 14' - 0" x 3"	INSUL STL	PAINT	0 HRS	K	STL.	FF	1B+1C/A5.5	1A/A5.5	
116-1	XI	20' - 0" x 14' - 0" x 3"	INSUL STL	PAINT	0 HRS	K	STL.	FF	1B+1C/A5.5	1A/A5.5	
116-2	XI	20' - 0" x 14' - 0" x 3"	INSUL STL	PAINT	0 HRS	K	STL.	FF	1B+1C/A5.5	1A/A5.5	
116-3	IV	3' - 0" x 7' - 0" x 1 3/4"	HM	PAINT	0 HRS	B	HM	PAINT	3B+3C/A5.4	3A/A5.4	
116-4	IV	3' - 0" x 7' - 0" x 1 3/4"	HM	PAINT	0 HRS	B	HM	PAINT	3B+3C/A5.4	3A/A5.4	
117-1	VI	3' - 0" x 7' - 0" x 1 3/4"	HM	PAINT	0 HRS	G	HM	PAINT	5B/A5.4	5A/A5.4	
118-1	VI	3' - 0" x 7' - 0" x 1 3/4"	HM	PAINT	0 HRS	G	HM	PAINT	5B/A5.4	5A/A5.4	
119-1	X	3' - 6" x 7' - 0" x 1 3/4"	HM	PAINT	0 HRS	H	HM	PAINT	4B+4C/A5.4	4A/A5.4	
120-1	VII	6' - 0" x 7' - 0" x 1 3/4"	HM	PAINT	0 HRS	L	HM	PAINT	5B/A5.4	5A/A5.4	
121-1	V	3' - 0" x 7' - 0" x 1 3/4"	HM	PAINT	0 HRS	I	HM	PAINT	4B+4C/A5.4	4A/A5.4	
123-1	XI	20' - 0" x 14' - 0" x 3"	INSUL STL	PAINT	0 HRS	K	STL.	FF	2B+1C/A5.5	2A/A5.5	
123-2	IV	3' - 0" x 7' - 0" x 1 3/4"	HM	PAINT	0 HRS	B	HM	PAINT	6B+3C/A5.4	6A/A5.4	
123-3	IV	3' - 0" x 7' - 0" x 1 3/4"	HM	PAINT	0 HRS	B	HM	PAINT	6B+3C/A5.4	6A/A5.4	
123-4	XI	20' - 0" x 14' - 0" x 3"	INSUL STL	PAINT	0 HRS	K	STL.	FF	2B+1C/A5.5	2A/A5.5	

DOOR HARDWARE

GROUP	DESCRIPTION	LOCKSET	DEADBOLT	ELECTRIC STRIKE	HINGES	CLOSER	FLOOR / HEAD BOLT	ASTRAGAL	REMOVABLE MULLION	PANIC	THRESHOLD	HOLD OPEN	DOOR STOP	WEATHERSTRIP	SMOKE SEAL	ACOUSTICAL SEAL	DOOR SWEEP	REMARKS
A	EXTERIOR EGRESS DOOR WITH ENTRY LOCKSET AND PADDLE PANIC HARDWARE	ENTRY	N/A	No	BALL BEARING	Yes	No	No	No	Yes	Yes	CLOSER	CLOSER	Yes	No	No	Yes	PADDLE PANIC HARDWARE
B	EXTERIOR EGRESS DOOR WITH ENTRY LOCKSET AND CRASH BAR PANIC HARDARE	ENTRY	N/A	No	BALL BEARING	Yes	No	No	No	Yes	Yes	CLOSER	CLOSER	Yes	No	No	Yes	CRASH BAR PANIC HARDWARE
C	INTERIOR EGRESS DOOR WITH ENTRY LOCKSET AND CRASH BAR PANIC HARDARE	ENTRY	N/A	No	BALL BEARING	Yes	No	No	No	Yes	Yes	CLOSER	CLOSER	Yes	No	No	Yes	CRASH BAR PANIC HARDWARE
D	INTERIOR DOOR WITH ENTRY LOCKSET & ACOUSTICAL SEALS	ENTRY	N/A	No	BALL BEARING	Yes	No	No	No	No	No	CLOSER	CLOSER	No	No	Yes	Yes	
E	RESTROOM DOOR	PASSAGE	OCCUPANCY	No	BALL BEARING	Yes	No	No	No	No	No	CLOSER	CLOSER	No	No	No	No	PROVIDE HM DOOR FRAME BUMPERS
G	INTERIOR STORAGE ROOM WITH STORAGE LOCKSET	STORAGE	N/A	No	BALL BEARING	Yes	No	No	<varies>	Yes	No	CLOSER	CLOSER	No	No	No	No	
H	INTERIOR STORAGE ROOM WITH STORAGE LOCKSET & WEATHER SEALS	STORAGE	N/A	No	BALL BEARING	Yes	No	No	No	No	Yes	CLOSER	CLOSER	Yes	No	No	Yes	
I	INTERIOR DOOR WITH PASSAGE LOCKSET & WEATHER SEALS	PASSAGE	N/A	No	BALL BEARING	Yes	No	No	No	No	Yes	CLOSER	CLOSER	Yes	No	No	Yes	
J	INTERIOR EGRESS DOOR WITH PASSAGE LOCKSET & ACCOUSTICAL SEALS	PASSAGE	N/A	No	BALL BEARING	Yes	No	No	No	Yes	No	CLOSER	CLOSER	No	No	Yes	Yes	PADDLE PANIC HARDWARE
K	OVERHEAD SECTIONAL DOOR W/ AUTOMATIC DOOR OPENER W/ FULL SAFETY CURTAIN	N/A	N/A	No	N/A	No	No	No	No	No	No	N/A	N/A	Yes	No	No	No	PROVIDE AUTOMATIC DOOR OPENER, FULL SAFETY CURTAIN, 3 BUTTON CONTROL
L	DOUBLE STORAGE DOOR	STORAGE	N/A	No	BALL BEARING	Yes	Yes	Yes	No	No	No	CLOSER	CLOSER	No	No	No	No	

MILLER STAUFFER ARCHITECTS
801 E. FRONT AVE. STE 201
COEUR D' ALENE, IDAHO 83814
P 208.664-1773 F 208.667.3174
WWW.MILLERSTAUFFER.COM

Door Schedule & Types

Permit / Bid Set

2-17-2023

Powell Sta. Maintenance

Highway 12 @ Milepost 162.5

Powell Station, Idaho

LICENSED ARCHITECT
AR-894931
MICHEAL P. WALKER
STATE OF IDAHO

No.	Description	Date

PROJECT NUMBER 2206
PRINCIPAL Designer
PROJECT MANAGER Author

A5.3

2/17/2023 11:41:53 AM S:\ITD Powell Station\CD's\ITD Powell Station - Maintenance.rvt

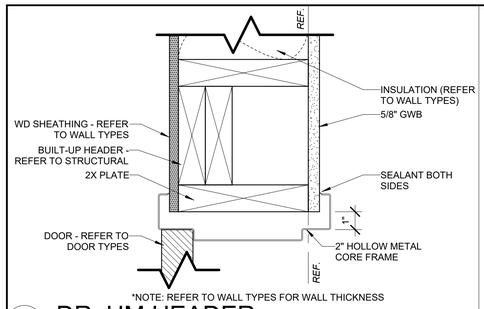

*NOTE: REFER TO WALL TYPES FOR WALL THICKNESS

1A DR_HM HEADER
3" = 1'-0"

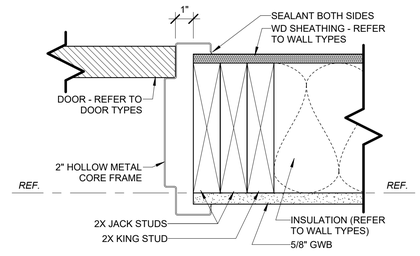

*NOTE: REFER TO WALL TYPES FOR WALL THICKNESS

1B HM HEADER (HI)
3" = 1'-0"

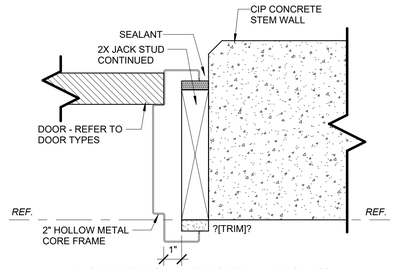

*NOTE: REFER TO WALL TYPES FOR WALL THICKNESS

1C DR_HM JAMB (LO)
3" = 1'-0"

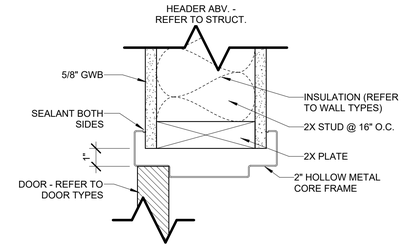

*NOTE: REFER TO WALL TYPES FOR WALL THICKNESS

2A HM HEADER
3" = 1'-0"

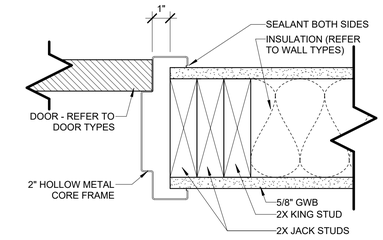

*NOTE: REFER TO WALL TYPES FOR WALL THICKNESS

2B HM JAMB
3" = 1'-0"

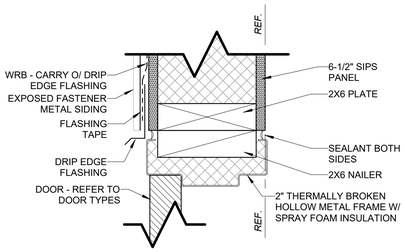

3A HM HEADER
3" = 1'-0"

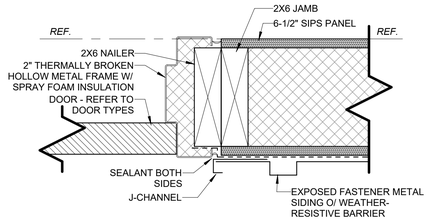

3B HM JAMB (HI)
3" = 1'-0"

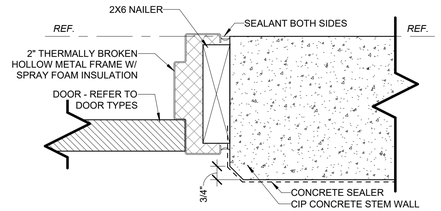

3C HM JAMB (LO)
3" = 1'-0"

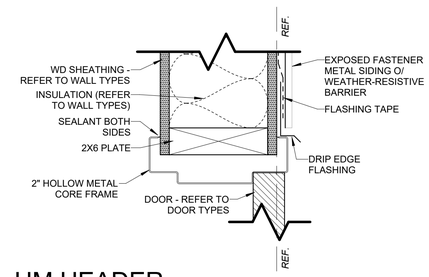

4A HM HEADER
3" = 1'-0"

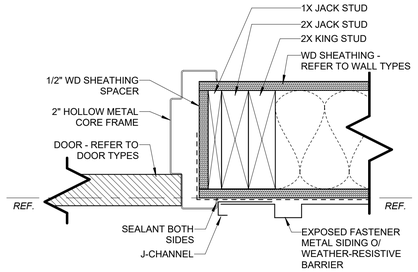

*NOTE: REFER TO WALL TYPES FOR WALL THICKNESS

4B HM JAMB (HI)
3" = 1'-0"

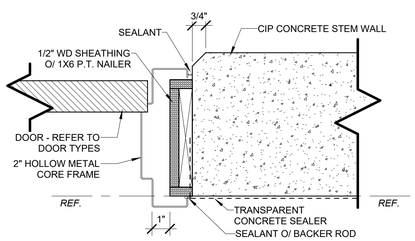

4C HM JAMB (LO)
3" = 1'-0"

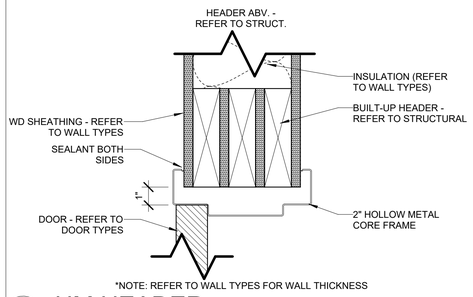

*NOTE: REFER TO WALL TYPES FOR WALL THICKNESS

5A HM HEADER
3" = 1'-0"

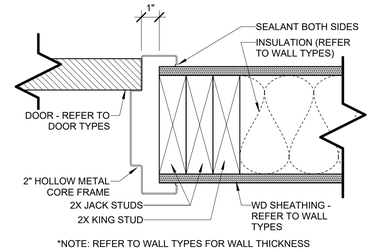

*NOTE: REFER TO WALL TYPES FOR WALL THICKNESS

5B HM JAMB
3" = 1'-0"

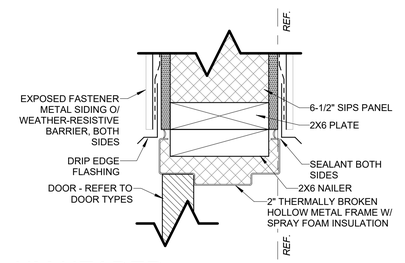

6A HM HEADER
3" = 1'-0"

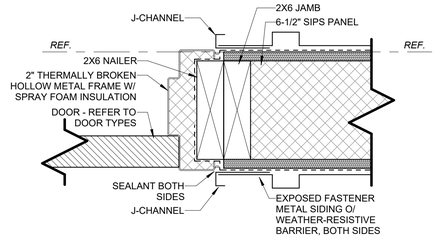

6B HM JAMB (HI)
3" = 1'-0"

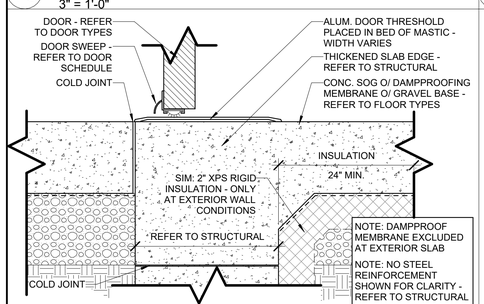

7 DR_HM THRESHOLD (1/HM1.4) 7
3" = 1'-0"

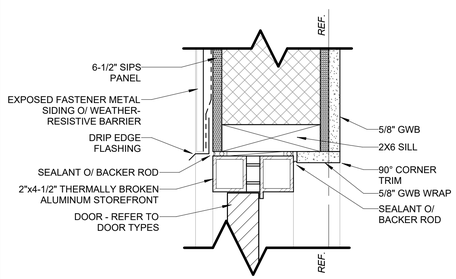

8A SF HEADER
3" = 1'-0"

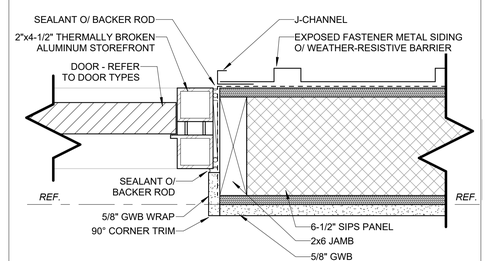

8B SF JAMB (HI)
3" = 1'-0"

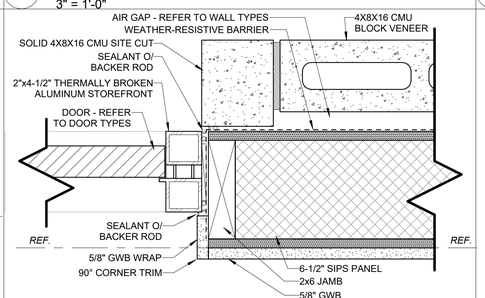

8C SF JAMB (LO)
3" = 1'-0"

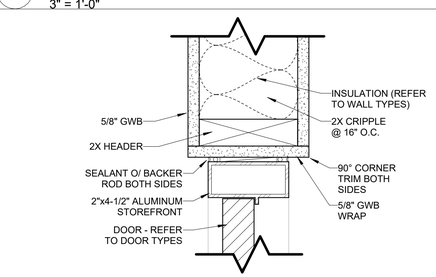

*NOTE: REFER TO WALL TYPES FOR WALL THICKNESS

9A SF HEADER
3" = 1'-0"

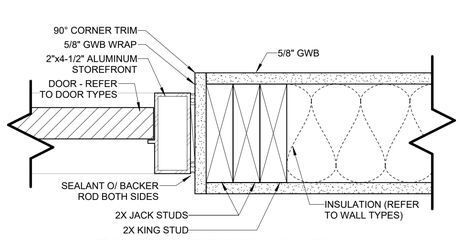

*NOTE: REFER TO WALL TYPES FOR WALL THICKNESS

9B SF JAMB
3" = 1'-0"

MILLER STAUFFER ARCHITECTS
601 E. FRONT AVE. STE 201
COEUR D' ALENE, IDAHO 83814
P 208.664-1773 F 208.667.3174
WWW.MILLERSTAUFFER.COM

Door Details
Permit / Bid Set
2-17-2023

Powell Sta. Maintenance
Highway 12 @ Milepost 162.5
Powell Station, Idaho

LICENSED ARCHITECT
AR-984931
MICHEAL P. WALKER
STATE OF IDAHO

No.	Description	Date

PROJECT NUMBER 2206
PRINCIPAL Designer
PROJECT MANAGER Author

A5.4

S:\ITD Powell Station\CD's\ITD Powell Station - Maintenance.rvt
2/17/2023 11:41:55 AM

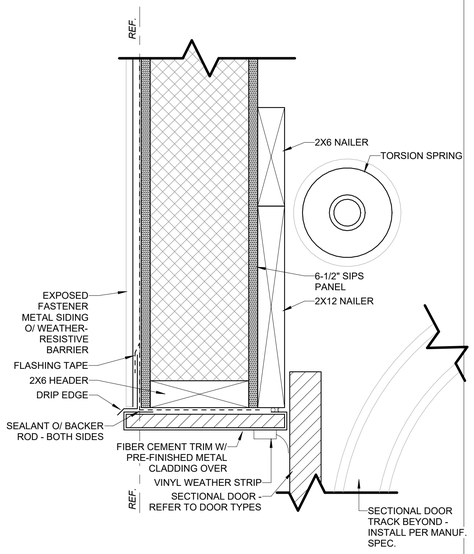

1A SECTIONAL HEAD
3" = 1'-0"

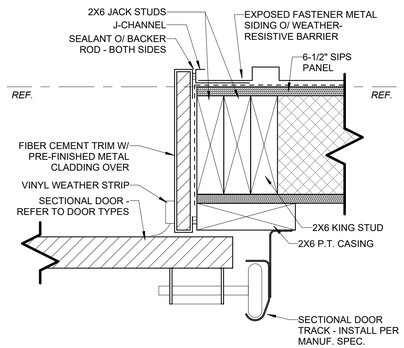

1B SECTIONAL JAMB (HI)
3" = 1'-0"

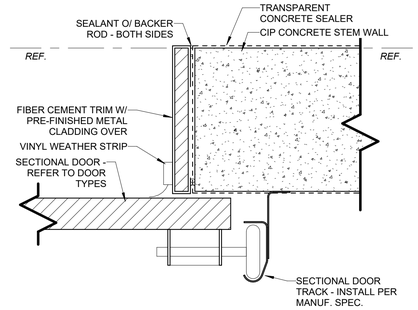

1C SECTIONAL JAMB (LO)
3" = 1'-0"

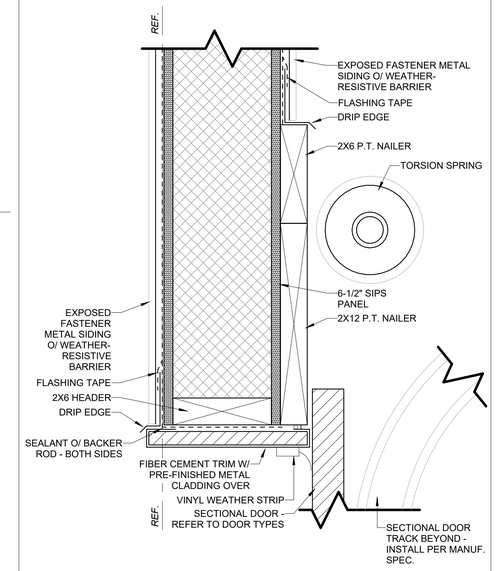

2A SECTIONAL HEAD @ WASH
3" = 1'-0"

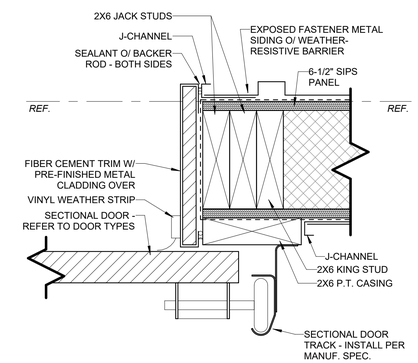

2B SECTIONAL JAMB @ WASH
3" = 1'-0"

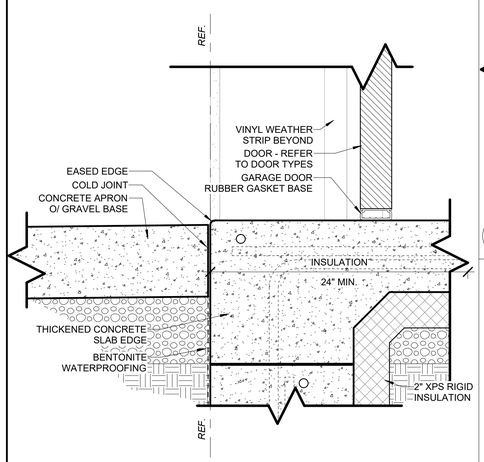

3 DR_SECTIONAL THRESHOLD
3" = 1'-0"

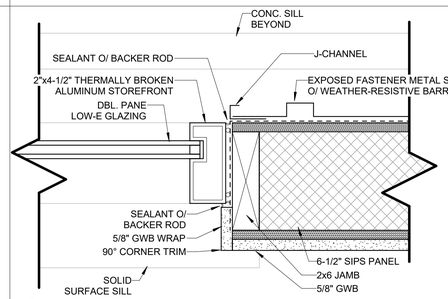

4 WIN_SF WINDOW JAMB 1/SF2.1
3" = 1'-0"

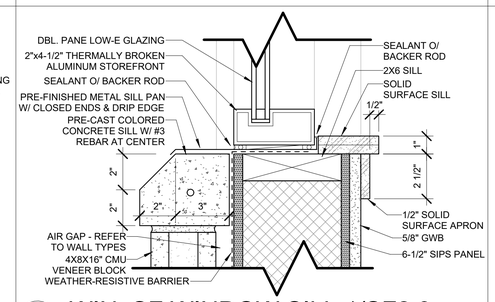

5 WIN_SF WINDOW SILL 1/SF2.3
3" = 1'-0"

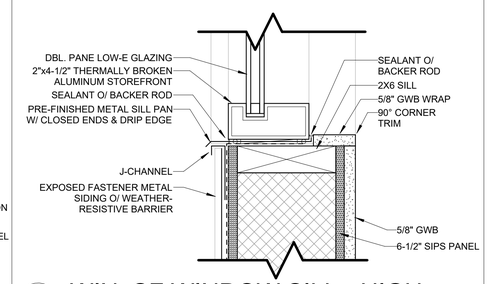

6 WIN_SF WINDOW SILL - HIGH
3" = 1'-0"

MILLER STAUFFER ARCHITECTS

601 E. FRONT AVE. STE 201
COEUR D' ALENE, IDAHO 83814
P 208.664-1773 F 208.667.3174
WWW.MILLERSTAUFFER.COM

Door & Window Details

Permit / Bid Set

2-17-2023

Powell Sta. Maintenance

Highway 12 @ Milepost 162.5
Powell Station, Idaho

LICENSED ARCHITECT
AR-894931
MICHEAL P. WALKER
STATE OF IDAHO

No.	Description	Date

PROJECT NUMBER 2206
PRINCIPAL Designer
PROJECT MANAGER Author

A5.5

2/17/2023 11:41:56 AM S:\ITD Powell Station\CD's\ITD Powell Station - Maintenance.rvt

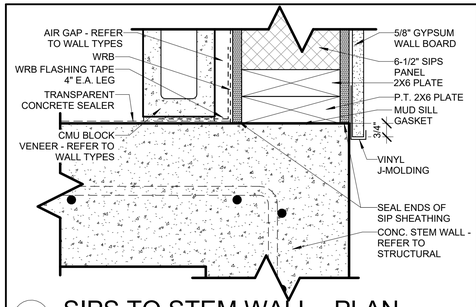

1 SIPS TO STEM WALL - PLAN
3" = 1'-0"

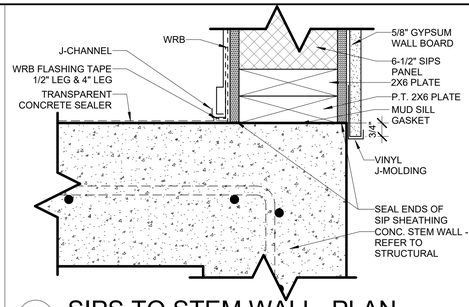

2 SIPS TO STEM WALL -PLAN
3" = 1'-0"

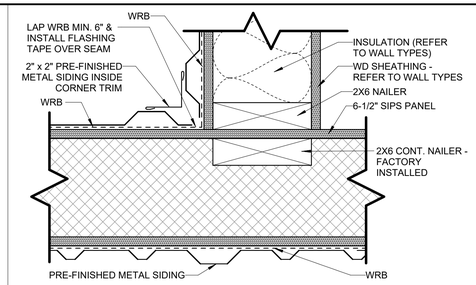

3 SIPS TO FRAMED WALL
3" = 1'-0"

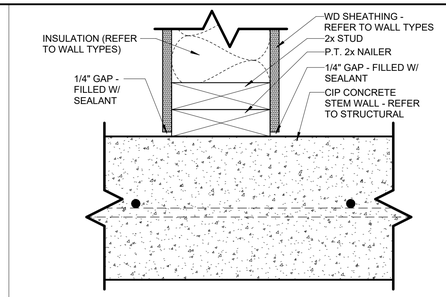

4 STEM WALL TO FRAME WALL
3" = 1'-0"

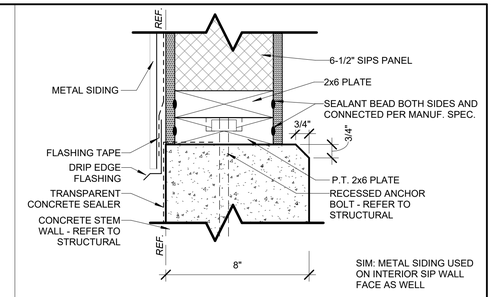

5 SIPS @ STEM WALL - TYP.
3" = 1'-0"

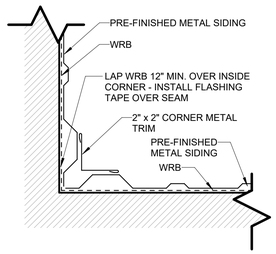

6 INSIDE CORNER DTL
3" = 1'-0"

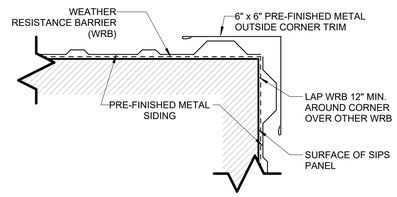

7 OUTSIDE CORNER DTL
3" = 1'-0"

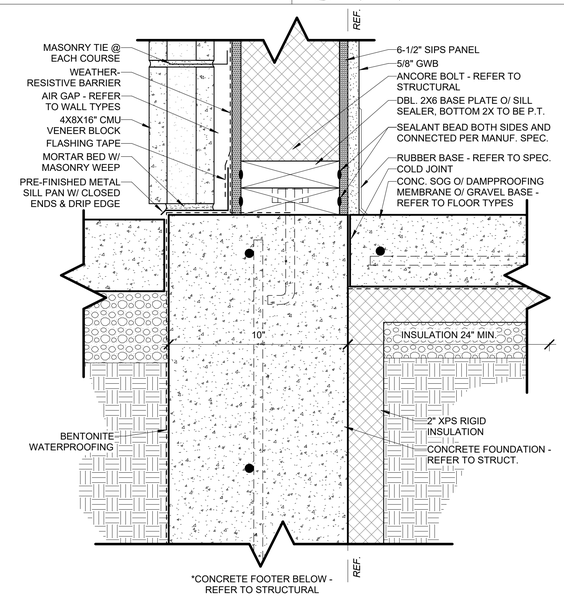

11 EXTERIOR WALL SILL AT OFFICE - TYPICAL
3" = 1'-0"

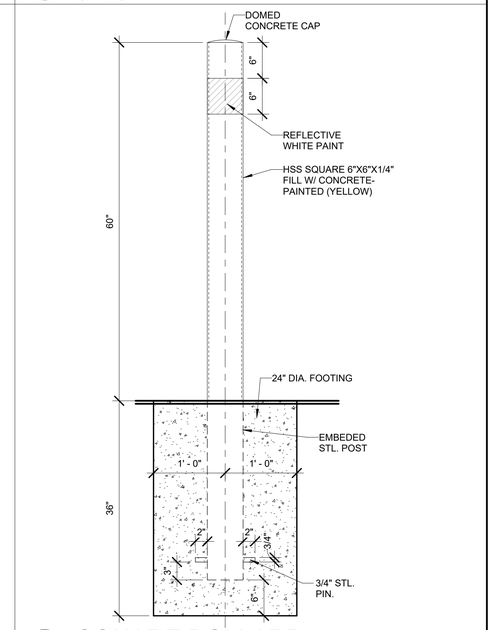

14 SQUARE BOLLARD
1" = 1'-0"

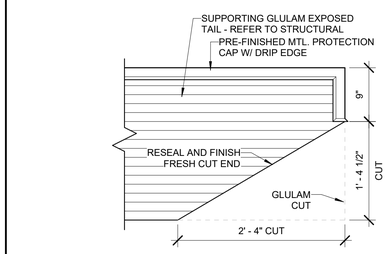

8 EXPOSED GLM TAIL
1" = 1'-0"

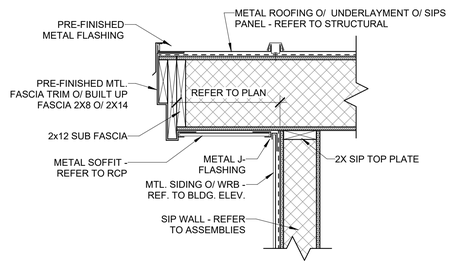

9 ROOF FASIA - TYP.
1" = 1'-0"

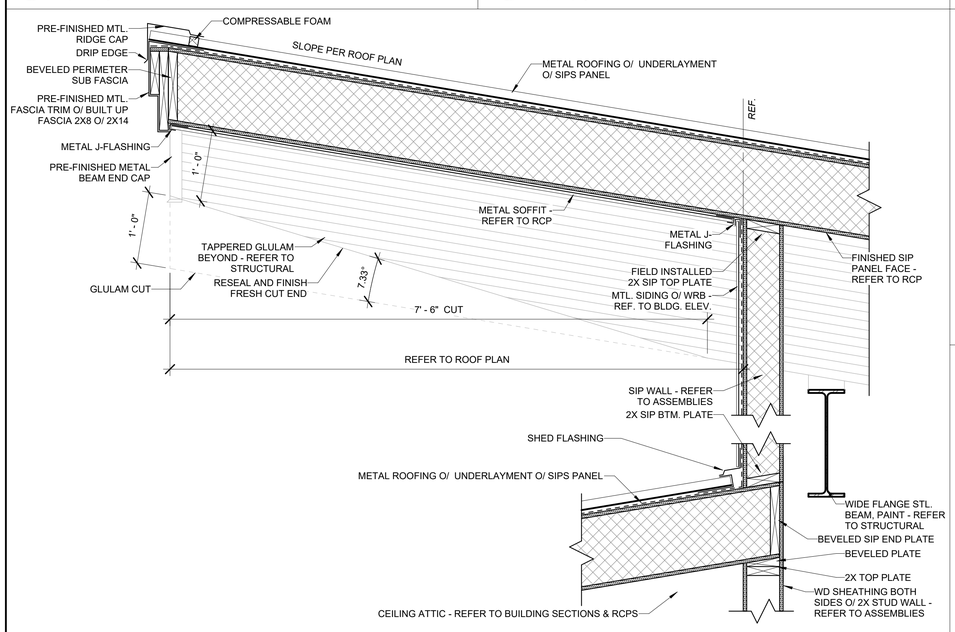

10 ROOF SHED TRANSITION
1" = 1'-0"

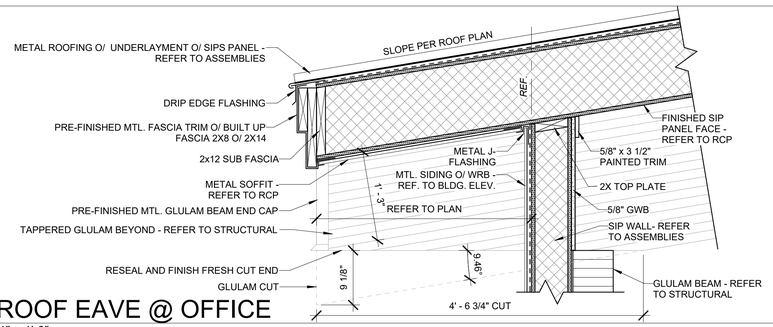

12 ROOF EAVE @ OFFICE
1" = 1'-0"

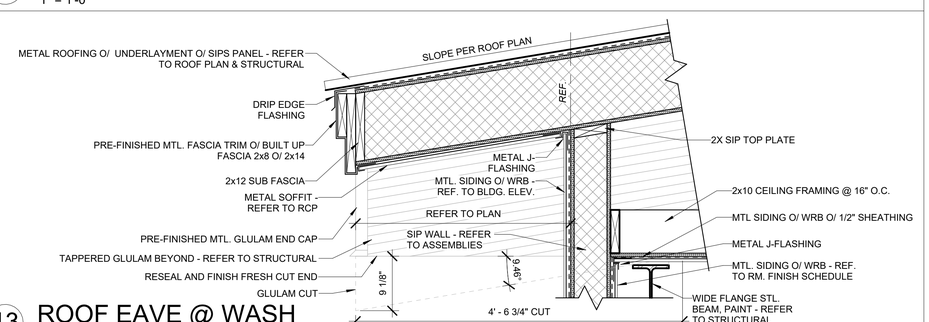

13 ROOF EAVE @ WASH
1" = 1'-0"

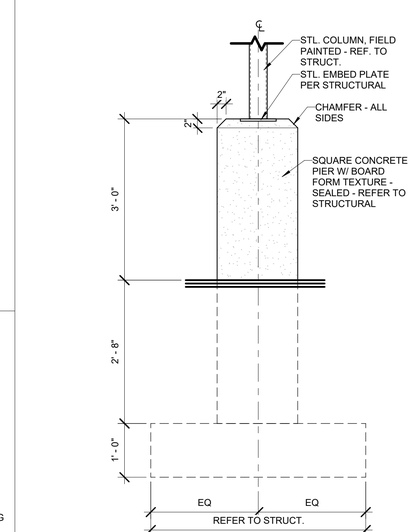

15 RAISED EXTERIOR PIER
3/4" = 1'-0"

MILLER STAUFFER ARCHITECTS
601 E. FRONT AVE. STE 201
COEUR D' ALENE, IDAHO 83814
P 208.664-1773 F 208.667.3174
WWW.MILLERSTAUFFER.COM

Exterior Details
Permit / Bid Set
2-17-2023

Powell Sta. Maintenance
Highway 12 @ Milepost 162.5
Powell Station, Idaho

LICENSED ARCHITECT AR-894931 MICHEAL P. WALKER STATE OF IDAHO

No.	Description	Date

PROJECT NUMBER 2206
PRINCIPAL Designer
PROJECT MANAGER Author

A5.6

2/17/2023 11:41:58 AM S:\ITD Powell Station\CD's\ITD Powell Station - Maintenance.rvt

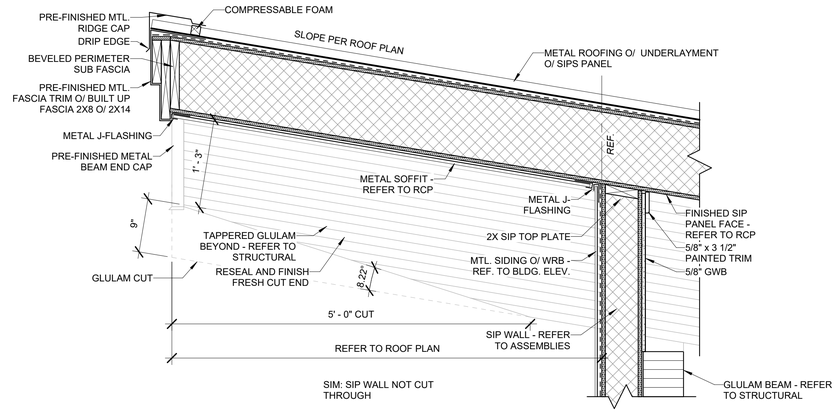

1 ROOF SHED

1" = 1'-0"

MILLER STAUFFER ARCHITECTS
601 E. FRONT AVE. STE 201
COEUR D' ALENE, IDAHO 83814
P 208.664-1773 F 208.667.3174
WWW.MILLERSTAUFFER.COM

Exterior Details

Permit / Bid Set

2-17-2023

Powell Sta. Maintenance

Highway 12 @ Milepost 162.5

Powell Station, Idaho

LICENSED ARCHITECT AR-984931 MICHEAL P. WALKER STATE OF IDAHO

No.	Description	Date

PROJECT NUMBER 2206
PRINCIPAL Designer
PROJECT MANAGER Author

A5.7

2/17/2023 11:41:58 AM S:\ITD Powell Station\CD's\ITD Powell Station - Maintenance.rvt

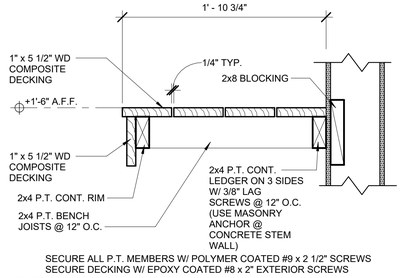

1 BENCH
1 1/2" = 1'-0"

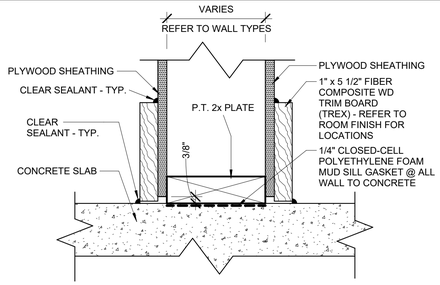

2 COMPOSITE DECKING BASE
3" = 1'-0"

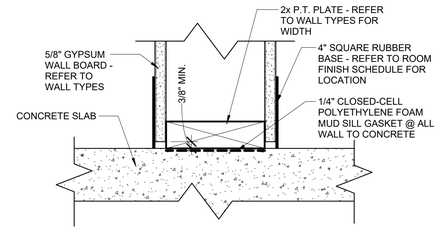

3 RUBBER BASE
3" = 1'-0"

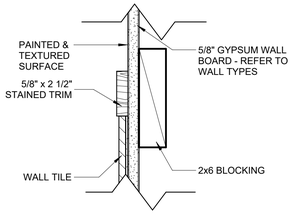

4 PICTURE RAIL @ TILE
3" = 1'-0"

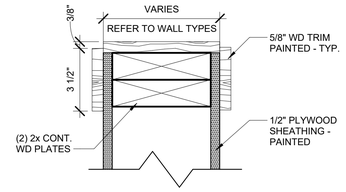

5 LOW WALL CAP - VEHICLE BAY
3" = 1'-0"

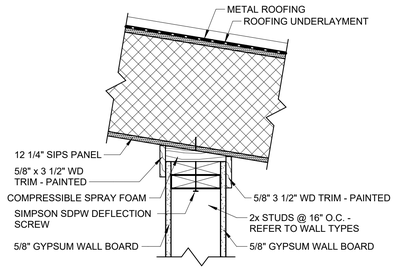

6 WALL TO SIPS
1 1/2" = 1'-0"

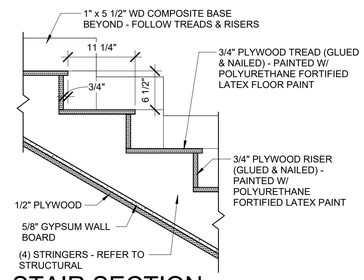

7 STAIR SECTION
1" = 1'-0"

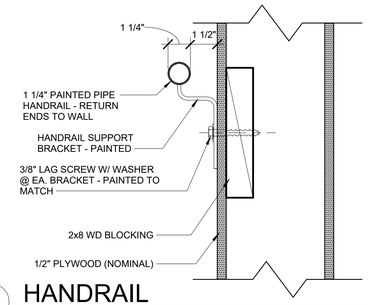

8 HANDRAIL
3" = 1'-0"

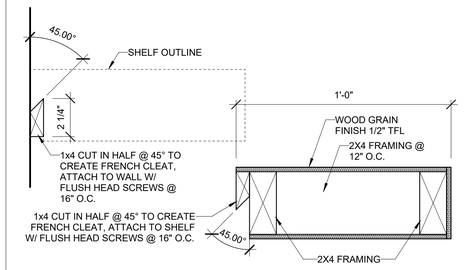

9 FLOATING SHELF
3" = 1'-0"

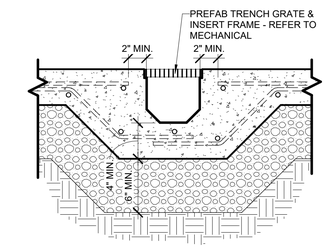

10 TRENCH DRAIN
1 1/2" = 1'-0"

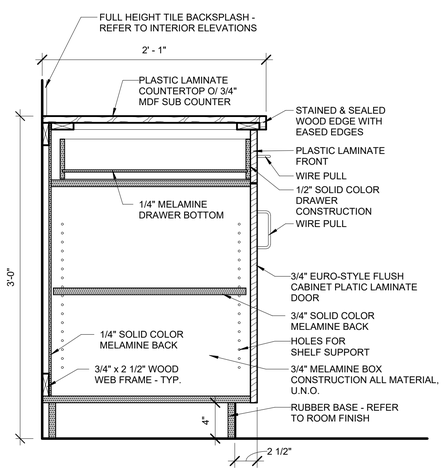

11 KITCHEN BASE W/ DRAWER
1 1/2" = 1'-0"

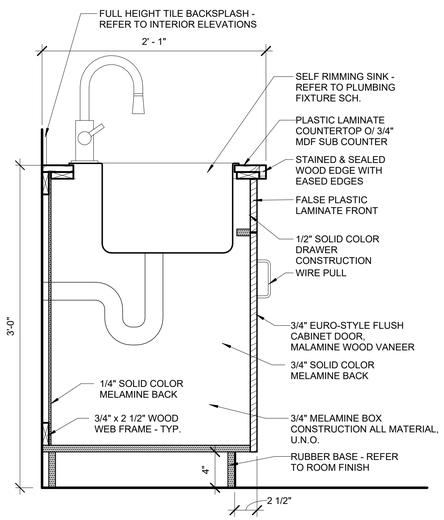

12 KITCHEN BASE @ SINK
1 1/2" = 1'-0"

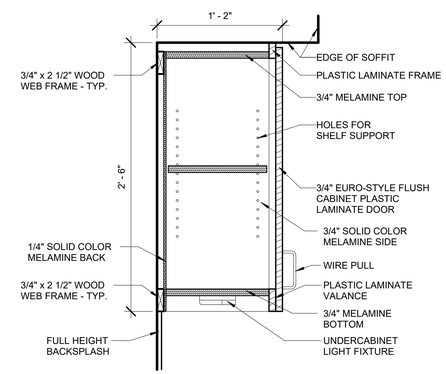

13 KITCHEN UPPER CABINET
1 1/2" = 1'-0"

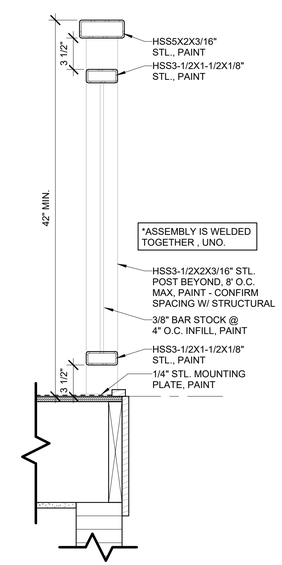

14 MEZZANINE RAILING
1 1/2" = 1'-0"

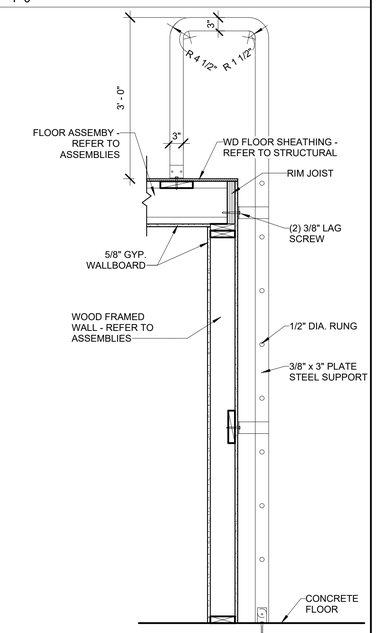

15 MAZZANINE LADDER
3/4" = 1'-0"

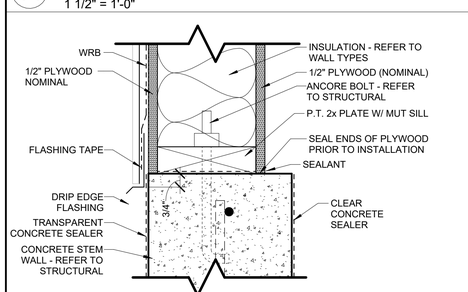

16 FRAMED WALL @ STEM - WASH
3" = 1'-0"

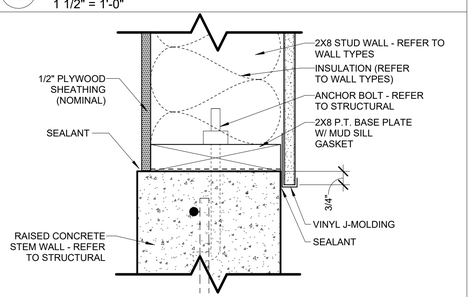

17 FRAMED WALL @ STEM WALL
3" = 1'-0"

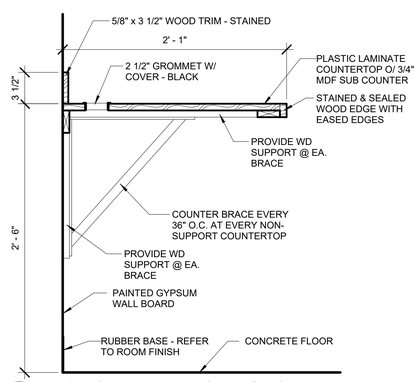

18 KITCHEN BASE @ SINK
1 1/2" = 1'-0"

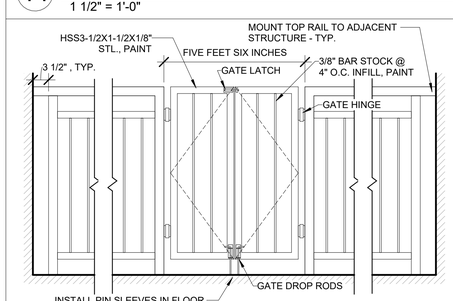

19 INT_RAILING ELEVATION
3/4" = 1'-0"

S:\ITD Powell Station\CD's\ITD Powell Station - Maintenance.rvt

2/17/2023 11:41:59 AM

MILLER STAUFFER ARCHITECTS
601 E. FRONT AVE. STE 201
COEUR D' ALENE, IDAHO 83814
P 208.664-1773 F 208.667.3174
WWW.MILLERSTAUFFER.COM

Interior Details
Permit / Bid Set
2-17-2023

Powell Sta. Maintenance
Highway 12 @ Milepost 162.5
Powell Station, Idaho

LICENSED ARCHITECT
AR-984931
MICHEAL P. WALKER
STATE OF IDAHO

No.	Description	Date

PROJECT NUMBER 2206
PRINCIPAL Designer
PROJECT MANAGER Author

A5.8

ROOM FINISH SCHEDULE

#	ROOM NAME	FLOOR MAT.	FLOOR FIN.	BASE MAT.	BASE FIN.	WALL NORTH MAT.	WALL NORTH FIN.	WALL EAST MAT.	WALL EAST FIN.	WALL WEST MAT.	WALL WEST FIN.	WALL SOUTH MAT.	WALL SOUTH FIN.	CEILING MAT.	CEILING FIN.	COUNTERTOP	REMARKS
101	Lobby	CONC-1	SEALER	RB-1	FF	GWB	PAINT	GWB	PAINT	GWB	PAINT	GWB	PAINT	SIPS	STAIN	N/A	
102	Watch Room	CONC-1	SEALER	RB-1	FF	GWB	PAINT	GWB	PAINT	GWB	PAINT	GWB	PAINT	SIPS	STAIN	PLAM	
103	Supervisors Office	CONC-1	SEALER	RB-1	FF	GWB	PAINT	GWB	PAINT	GWB	PAINT	GWB	PAINT	SIPS	STAIN	PLAM	
104	Restroom	CONC-1	SEALER	TILE	N/A	TILE	FF	TILE	FF	TILE	FF	TILE	FF	GWB	PAINT	N/A	
105	Restroom	CONC-1	SEALER	TILE	N/A	TILE	FF	TILE	FF	TILE	FF	TILE	FF	GWB	PAINT	N/A	
106	Hallway	CONC-1	SEALER	RB-1	FF	GWB	PAINT	GWB	PAINT	GWB	PAINT	GWB	PAINT	SIPS	STAIN	N/A	
107	Hallway	CONC-1	SEALER	RB-1	FF	GWB	PAINT	GWB	PAINT	GWB	PAINT	GWB	PAINT	SIPS	STAIN	N/A	
108	Janitor	CONC-1	SEALER	RB-1	FF	GWB	PAINT	GWB	PAINT	GWB	PAINT	GWB	PAINT	SIPS	STAIN	N/A	
109	State Patrol Office	CONC-1	SEALER	RB-1	FF	GWB	PAINT	GWB	PAINT	GWB	PAINT	GWB	PAINT	SIPS	STAIN	PLAM	
110	IT Room	CONC-1	SEALER	RB-1	FF	WD-1	PAINT	GWB	PAINT	GWB	PAINT	GWB	PAINT	SIPS	STAIN	N/A	
111	Break Room	CONC-1	SEALER	RB-1	FF	GWB	PAINT	GWB	PAINT	GWB	PAINT	GWB	PAINT	SIPS	STAIN	PLAM	
112	Vestibule	CONC-1	SEALER	RB-1	FF	GWB	PAINT	GWB	PAINT	GWB	PAINT	GWB	PAINT	SIPS	STAIN	N/A	
113	Covered Entry	CONC-2	SEALER	N/A	N/A	N/A	N/A	N/A	N/A	N/A	N/A	N/A	N/A	SIPS	STAIN	N/A	
114	Bay 3	CONC-2	SEALER	WDC-1	N/A	SIPS	PAINT	WD-1	PAINT	N/A	N/A	SIPS	PAINT	SIPS	STAIN	N/A	
115	Bay 2	CONC-2	SEALER	WDC-1	N/A	SIPS	PAINT	N/A	N/A	N/A	N/A	SIPS	PAINT	SIPS	STAIN	N/A	
116	Bay 1	CONC-2	SEALER	WDC-1	N/A	SIPS	PAINT	N/A	N/A	WD-1	PAINT	SIPS	PAINT	SIPS	STAIN	N/A	
117	Electrical	CONC-2	SEALER	WDC-1	FF	WD-1	PAINT	TILE	PAINT	WD-1	PAINT	WD-1	PAINT	GWB	PAINT	N/A	
118	Decon	CONC-2	SEALER	WDC-1	FF	WD-1	PAINT	WD-1	PAINT	WD-1	PAINT	WD-1	PAINT	GWB	PAINT	N/A	
119	Wash Equipment	CONC-2	SEALER	WDC-1	FF	WD-1	PAINT	WD-1	PAINT	WD-1	PAINT	WD-1	PAINT	GWB	FF	N/A	
120	Storage Room	CONC-2	SEALER	WDC-1	FF	WD-1	PAINT	WD-1	PAINT	WD-1	PAINT	WD-1	PAINT	GWB	PAINT	N/A	
121	Metal Fabrication	CONC-2	SEALER	WDC-1	FF	SIPS	PAINT	N/A	N/A	WD-1	PAINT	WD-1	PAINT	GWB	PAINT	N/A	
122	Truck Wash	CONC-2	SEALER	N/A	N/A	STL	FF	STL	FF	STL	FF	STL	FF	STL	PAINT	N/A	
123	Mezzanine	WD-1	PAINT	WDC-1	FF	SIPS	PAINT	WD-1	PAINT	WD-1	PAINT	WD-1	PAINT	SIPS	STAIN	N/A	
124	Office Mechanical Mezz.	WD-1	PAINT	RB-1	FF	GWB	PAINT	GWB	PAINT	GWB	PAINT	GWB	PAINT	SIPS	STAIN	N/A	

MATERIAL SCHEDULE

MARK	LOCATION	DESCRIPTION	COLOR
CONC-1	FLOOR	HARD TROWEL CONCRETE	STANDARD GRAY
CONC-2	FLOOR	LIGHT BROOM CONCRETE	STANDARD GRAY
RB-1	BASE	4" RESILIENT BASE	TBD
WD-1	WALL	1/2" PLYWOOD (NOMINAL)	TBD
SIPS	WALL	STRUCTURAL INSULATED PANEL	TBD
GWB	WALL	GYPSUM WALL BOARD	TBD
SIPS	CEILING	STRUCTURAL INSULATED PANEL	TBD
GWB	CEILING	GYPSUM WALL BOARD	TBD

SHEET KEYNOTES

1. 28"x28" COMMERCIAL FLOOR MOUNTED SERVICE SINK - REFER TO PLUMBING FIXTURE SCHEDULE
2. WALL MOUNTED DATA COMMUNICATIONS RACK
3. 36" DUAL BASIN STAINLESS STEEL SELF-RIMMING KITCHEN SINK - REFER TO PLUMBING FIXTURE SCHEDULE
4. RESIDENTIAL ELECTRIC RANGE - SUPPLIED & INSTALLED BY OWNER
5. RESIDENTIAL REFRIGERATOR / FREEZER - SUPPLIED & INSTALLED BY OWNER
6. FREESTANDING COMMERCIAL ICE-MACHINE SUPPLIED BY OWNER & INSTALLED BY CONTRACTOR
7. SWING DOOR - REFER TO DOOR SCHEDULE & TYPES
8. ALUMINUM FRAMED STOREFRONT - REFER TO WINDOW TYPES
9. 6"X6"X60" SQUARE CONCRETE FILLED BOLLARD W/ PAINTED FINISH & WHITE PAINT STRIPE
10. INSULATED STEEL DOOR IN THERMALLY BROKEN HOLLOW METAL FRAME - REFER TO DOOR SCHEDULE & TYPES
11. EMERGENCY SHOWER - REFER TO PLUMBING FIXTURE SCHEDULE
12. 12" x 12" METAL STORAGE LOCKERS - SUPPLIED & INSTALLED BY OWNER - SHOWN ONLY FOR REFERENCE
13. BUILT-IN INDUSTRIAL PRESSURE WASHER - OWNER SUPPLIED & CONTRACTOR INSTALLED
14. EMERGENCY EYE/FACE WASH STATION - REFER TO PLUMBING FIXTURE SCHEDULE
15. OVERHEAD INSULATED SECTIONAL DOOR W/ AUTOMATIC DOOR OPENER - REFER TO DOOR SCHEDULE & TYPES
16. COMMERCIAL FLOOR MOUNTED TANKED WATER CLOSET - REFER TO PLUMBING FIXTURE SCHEDULE
17. WALL MOUNTED LAVATORY W/ ANSI COMPLIANT PIPE & DRAIN PROTECTION (+34" MAX. A.F.F.)
18. 1 1/2" PLASTIC-LAMINATE CLAD COUNTERTOP - MEDIUM GRADE - MEDIUM PRICE GROUP W/ 3/4" EASED EDGE WOOD BANDING
19. CUSTOM PLASTIC LAMINATE CLAD ARCHITECTURAL UPPER CABINET W/ MELAMINE CABINET BOXES, 6" WIRE PULLS, & UNDERCABINET LIGHT VALANCES
20. FURNITURE BY OWNER - SHOWN ONLY FOR REFERENCE (NOT INCLUDED IN SCOPE OF WORK)
21. HOLLOW METAL DOOR AND FRAME - REFER TO DOOR SCHEDULE & TYPES

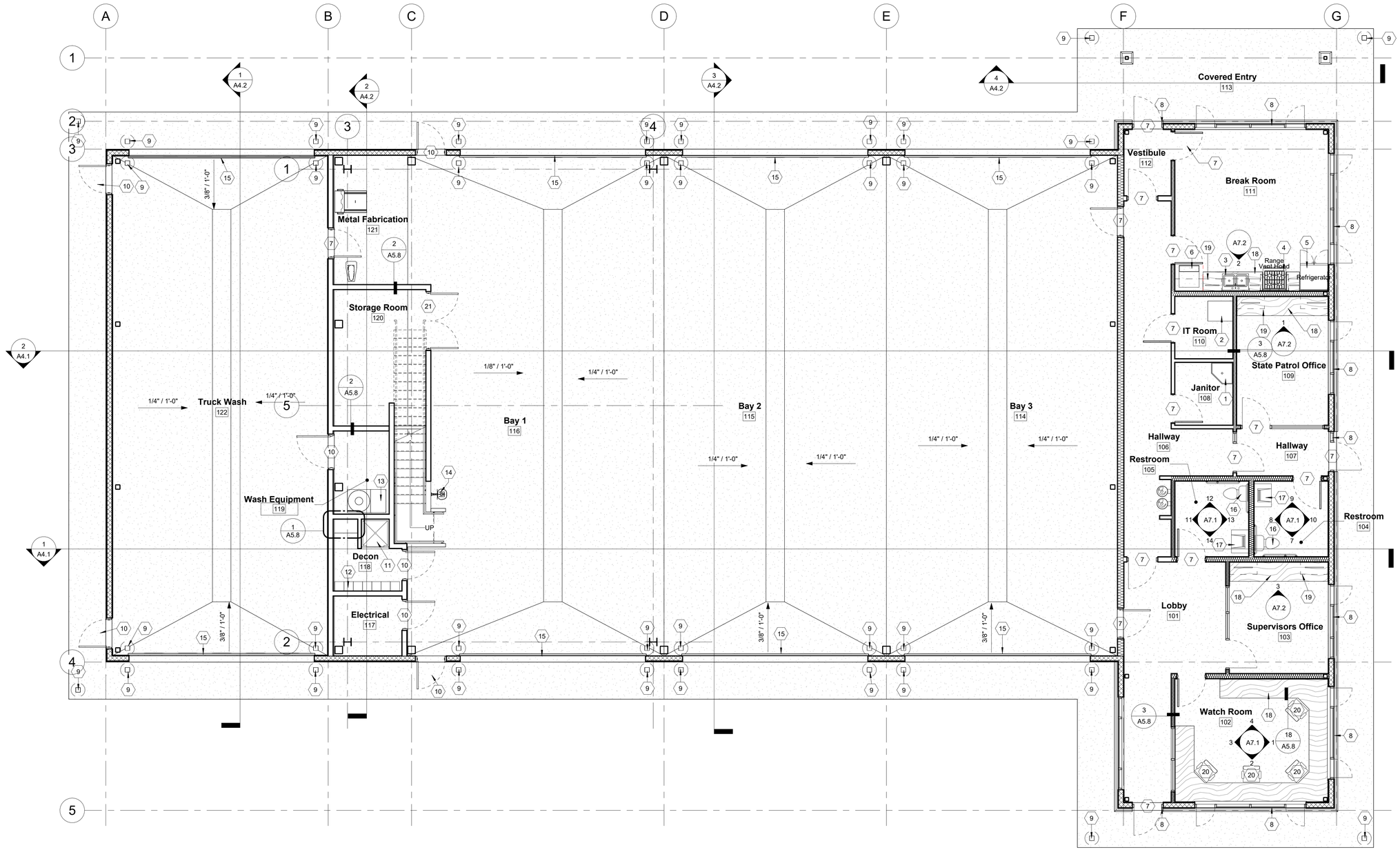

Level 1_Finished Plan

3/16" = 1'-0"

MILLER STAUFFER ARCHITECTS

801 E. FRONT AVE. STE 201
COEUR D' ALENE, IDAHO 83814
P 208.664-1773 F 208.667.3174
WWW.MILLERSTAUFFER.COM

Finish Plan

Permit / Bid Set

2-17-2023

Powell Sta. Maintenance

Highway 12 @ Milepost 162.5

Powell Station, Idaho

LICENSED ARCHITECT AR-984931 MICHEAL P. WALKER STATE OF IDAHO

No.	Description	Date

PROJECT NUMBER 2206

PRINCIPAL Designer

PROJECT MANAGER Author

A6.1

2/17/2023 11:42:03 AM S:\ITD Powell Station\CD's\ITD Powell Station - Maintenance.rvt

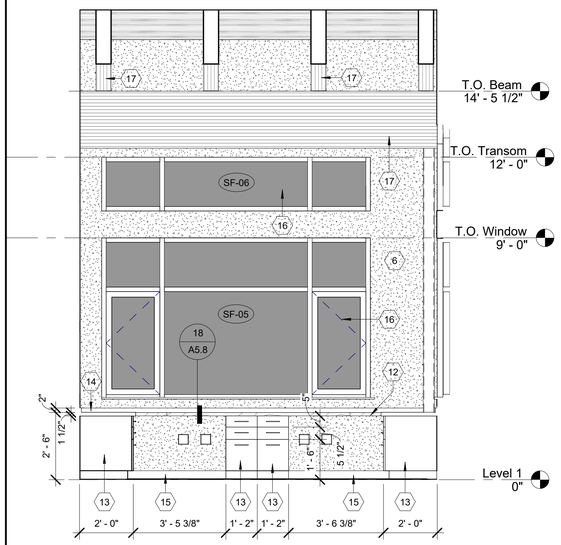

1 Watch Room Elevation
3/8" = 1'-0"

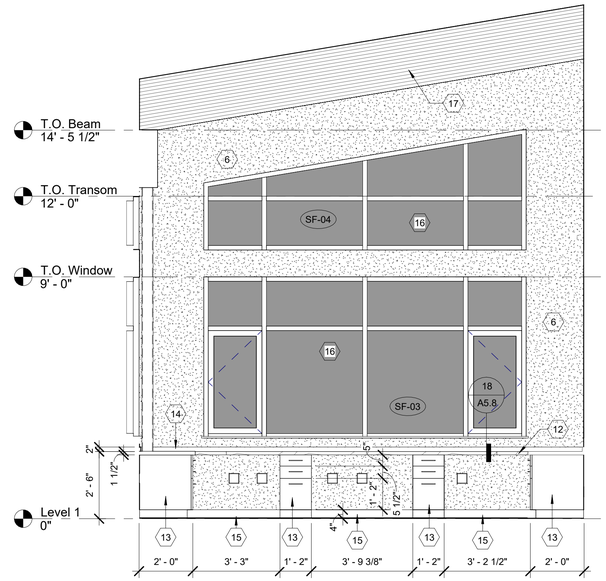

2 Watch Room Elevation
3/8" = 1'-0"

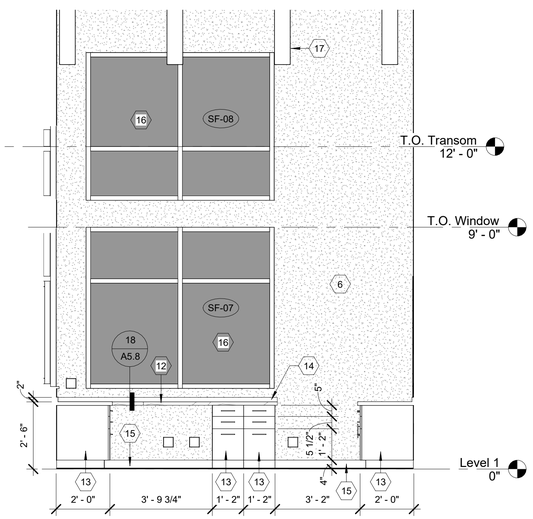

3 Watch Room Elevation
3/8" = 1'-0"

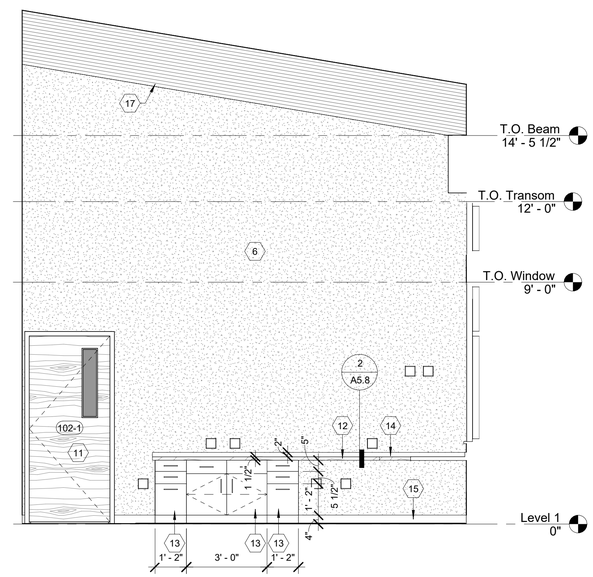

4 Watch Room Elevation
3/8" = 1'-0"

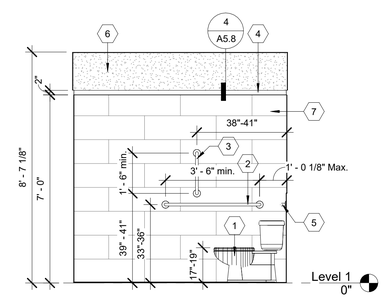

7 7_Restroom Elevation
3/8" = 1'-0"

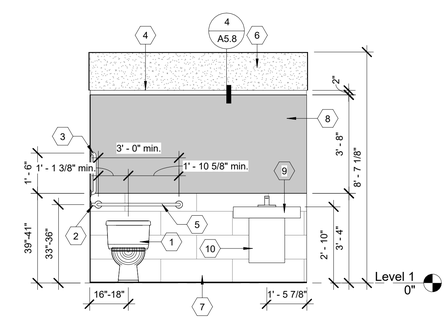

8 8_Restroom Elevation
3/8" = 1'-0"

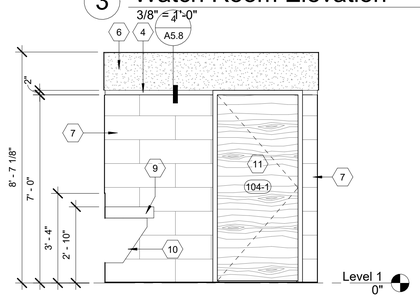

9 9_Restroom Elevation
3/8" = 1'-0"

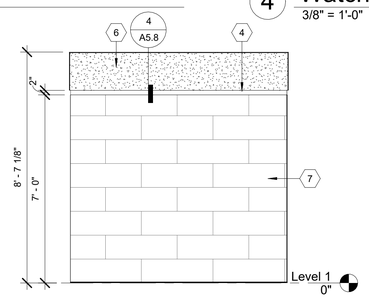

10 10_Restroom Elevation
3/8" = 1'-0"

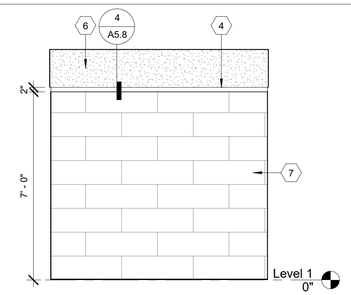

11 11_Restroom Elevation
3/8" = 1'-0"

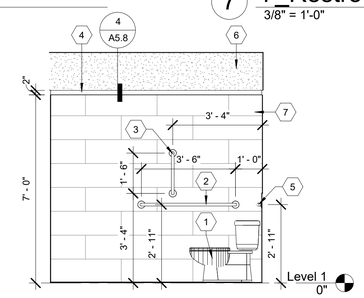

12 12_Restroom Elevation
3/8" = 1'-0"

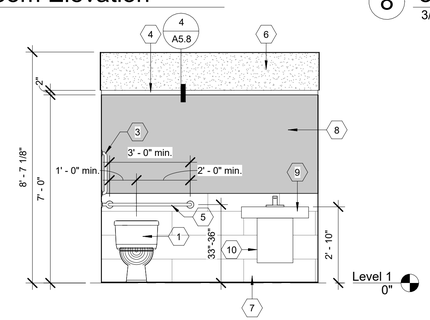

13 13_Restroom Elevation
3/8" = 1'-0"

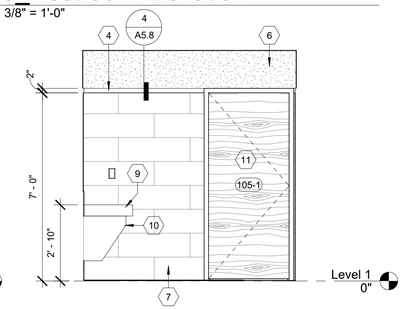

14 14_Restroom Elevation
3/8" = 1'-0"

SHEET KEYNOTES

1. COMMERCIAL FLOOR MOUNTED TANKED WATER CLOSET - REFER TO PLUMBING FIXTURE SCHEDULE
2. 42" ANSI COMPLIANT GRAB BARS WITH PEENED FINISH & CONCEALED FASTENERS
3. 18" ANSI COMPLIANT GRAB BARS WITH PEENED FINISH & CONCEALED FASTENERS
4. 5/8"x2" WOOD PICTURE RAIL - STAINED FINISH
5. 36" ANSI COMPLIANT GRAB BARS WITH PEENED FINISH & CONCEALED FASTENERS
6. PAINTED GYPSUM WALL BOARD W/ LIGHT ORANGE PEEL TEXTURE - COLOR TBD
7. PORCELAIN TILE - REFER TO SPECIFICATIONS
8. 1/4" PLATE GLASS MIRROR
9. WALL MOUNTED LAVATORY W/ ANSI COMPLIANT PIPE & DRAIN PROTECTION (+34" MAX. A.F.F.)
10. ANSI COMPLIANT UNDERSINK PROTECTION ON LAVATORY DRAIN & WATER LINES
11. SWING DOOR - REFER TO DOOR SCHEDULE & TYPES
12. 1 1/2" PLASTIC-LAMINATE CLAD COUNTERTOP - MEDIUM GRADE - MEDIUM PRICE GROUP W/ 3/4" EASED EDGE WOOD BANDING
13. CUSTOM PLASTIC LAMINATE CLAD ARCHITECTURAL BASE CABINETS W/ MELAMINE CABINET BOXES & 6" WIRE PULLS
14. 5/8"x2" WOOD BACKSPLASH - STAINED FINISH
15. 4" RESILIENT BASE - SQUARE (COLOR TBD)
16. ALUMINUM FRAMED STOREFRONT - REFER TO WINDOW TYPES
17. STAINED ROUGH SAWN GLULAM BEAM W/ CUT ENDS AS SHOWN - REFER TO STRUCTURAL

MILLER STAUFFER ARCHITECTS
601 E. FRONT AVE. STE 201
COEUR D' ALENE, IDAHO 83814
P 208.664-1773 F 208.667.3174
WWW.MILLERSTAUFFER.COM

Interior Elevations
Permit / Bid Set
2-17-2023

Powell Sta. Maintenance
Highway 12 @ Milepost 162.5
Powell Station, Idaho

LICENSED ARCHITECT
AR-984931
MICHEAL P. WALKER
STATE OF IDAHO

No.	Description	Date

PROJECT NUMBER 2206
PRINCIPAL Designer
PROJECT MANAGER Author

A7.1

S:\ITD Powell Station\CD's\ITD Powell Station - Maintenance.rvt
2/17/2023 11:42:07 AM

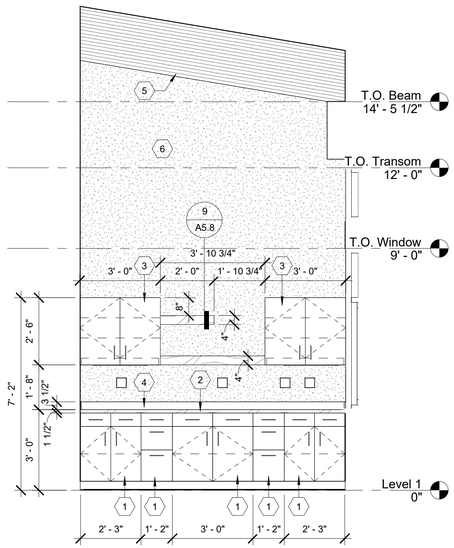

1 15_State Patrol Office Elevation
3/8" = 1'-0"

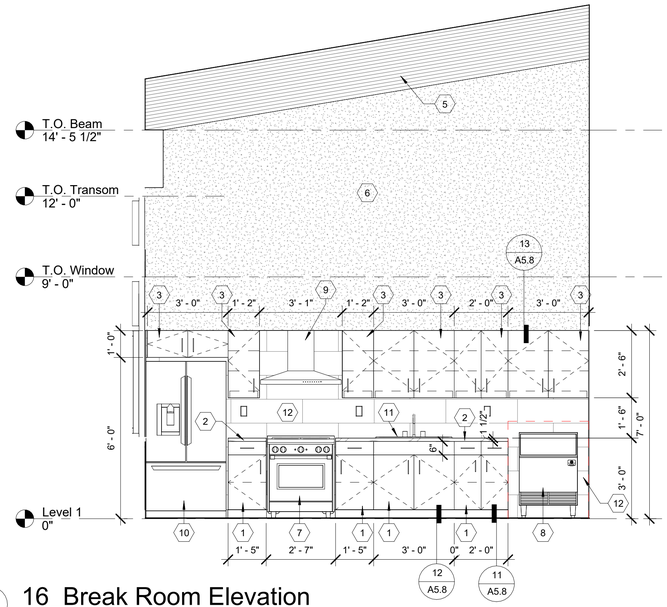

2 16_Break Room Elevation
3/8" = 1'-0"

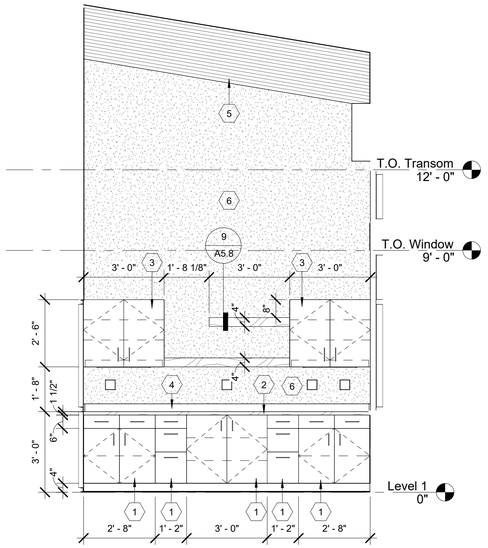

3 17_Supervisor Office Elevation
3/8" = 1'-0"

SHEET KEYNOTES

1. CUSTOM PLASTIC LAMINATE CLAD ARCHITECTURAL BASE CABINETS W/ MELAMINE CABINET BOXES & 6" WIRE PULLS
2. 1 1/2" PLASTIC-LAMINATE CLAD COUNTERTOP - MEDIUM GRADE - MEDIUM PRICE GROUP W/ 3/4" EASED EDGE WOOD BANDING
3. CUSTOM PLASTIC LAMINATE CLAD ARCHITECTURAL UPPER CABINET W/ MELAMINE CABINET BOXES, 6" WIRE PULLS, & UNDERCABINET LIGHT VALANCES
4. 5/8"x3 1/2" WOOD BACKSPLASH - STAINED FINISH
5. STAINED ROUGH SAWN GLULAM BEAM W/ CUT ENDS AS SHOWN - REFER TO STRUCTURAL
6. PAINTED GYPSUM WALL BOARD W/ LIGHT ORANGE PEEL TEXTURE - COLOR TBD
7. RESIDENTIAL ELECTRIC RANGE - SUPPLIED & INSTALLED BY OWNER
8. FREESTANDING COMMERCIAL ICE-MACHINE SUPPLIED BY OWNER & INSTALLED BY CONTRACTOR
9. RESIDENTIAL OVER THE RANGE EXHAUST HOOD - REFER TO MECHANICAL SHEETS.
10. RESIDENTIAL REFRIGERATOR / FREEZER - SUPPLIED & INSTALLED BY OWNER
11. 36" DUAL BASIN STAINLESS STEEL SELF-RIMMING KITCHEN SINK - REFER TO PLUMBING FIXTURE SCHEDULE
12. PORCELAIN TILE - REFER TO SPECIFICATIONS

MILLER STAUFFER ARCHITECTS
601 E. FRONT AVE. STE 201
COEUR D' ALENE, IDAHO 83814
P 208.664-1773 F 208.667.3174
WWW.MILLERSTAUFFER.COM

Interior Elevations
Permit / Bid Set
2-17-2023

LICENSED ARCHITECT AR-984931
MICHEAL P. WALKER
STATE OF IDAHO

Powell Sta. Maintenance
Highway 12 @ Milepost 162.5
Powell Station, Idaho

No.	Description	Date

PROJECT NUMBER 2206
PRINCIPAL Designer
PROJECT MANAGER Author

A7.2

2/17/2023 11:42:09 AM S:\ITD Powell Station\CD's\ITD Powell Station - Maintenance.rvt

STRUCTURAL - GENERAL NOTES

GENERAL REQUIREMENTS

GOVERNING CODE: The design and construction of this project is governed by the **"International Building Code (IBC)", 2018 Edition**, hereafter referred to as the IBC, as adopted and modified by the State of Idaho Division of Public Safety understood to be the Authority Having Jurisdiction (AHJ).

REFERENCE STANDARDS: Refer to Chapter 35 of 2018 IBC. Where other Standards are noted in the drawings, use the latest edition of the standard unless a specific date is indicated. Reference to a specific section in a code does not relieve the contractor from compliance with the entire standard.

DEFINITIONS: The following definitions cover the meanings of certain terms used in these notes:

"**Architect/Engineer**" – The Architect of Record and the Structural Engineer of Record.

- "**Structural Engineer of Record**" **(SER)** – The structural engineer who is licensed to stamp & sign the structural documents for the project. The SER is responsible for the design of the Primary Structural System.
- "**Submit for review**" - Submit to the Architect/SER for review prior to fabrication or construction.
- "**Per Plan**" – Indicates references to the structural plans, elevations and structural general notes.
- **"Specialty Structural Engineer" (SSE) –** A professional engineer (PE or SE), licensed in the State where the project is located, (typically not the SER), who performs specialty structural engineering services for selected specialty-engineered elements identified in the Contract Documents, and who has experience and training in the Specialty. Documents stamped and signed by the SSE shall be completed by or under the direct supervision of the SSE.
- **"Bidder-designed"** – Components of the structure that require the general contractor, subcontractor, or supplier who is responsible for the design, fabrication and installation of specialty-engineered elements identified in the Contract Documents to retain the services of an SSE. Submittals of "Bidder-designed" elements shall be stamped and signed by the SSE.

OTHER DRAWINGS: Refer to the architectural, mechanical, electrical, civil and plumbing drawings for additional information including but not limited to: dimensions, elevations, slopes, door and window openings, non-bearing walls, stairs, finishes, drains, waterproofing, railings, curbs, depressions, mechanical unit locations, and other non-structural items.

STRUCTURAL DETAILS: The structural drawings are intended to show the general character and extent of the project and are not intended to show all details of the work. Use entire detail sheets and specific details referenced in the plans as "typical" wherever they apply. Similarly, use details on entire sheets with "typical" in the name wherever they apply.

STRUCTURAL RESPONSIBILITIES: The structural engineer (SER) is responsible for the strength and stability of the primary structure in its completed form.

COORDINATION: The Contractor is responsible for coordinating details and accuracy of the work; for confirming and correlating all quantities and dimensions; for selecting fabrication processes; for techniques of assembly; and for performing work in a safe and secure manner.

MEANS, METHODS and SAFETY REQUIREMENTS: The contractor is responsible for the means and methods of construction and all job related safety standards such as OSHA and DOSH (Department of Occupational Safety and Health). Contractor is responsible to adhere to OSHA regulations regarding steel erection items specifically addressed in the latest OSHA regulations. Bolting and field welding at all member connections is to be completed prior to the release of the member from the hoisting mechanism unless reviewed and approved by the General Contractor's temporary bracing and shoring design engineer. The construction documents represent the completed structure. The contractor is responsible for means and methods of construction related to the intermediate structural conditions (i.e. movement of the structure due to moisture and thermal effects; construction sequence; temporary bracing, etc).

BRACING/SHORING DESIGN ENGINEER: The contractor shall at their discretion employ an SSE, a registered professional engineer for the design of any temporary bracing and shoring.

TEMPORARY SHORING, BRACING: The contractor is responsible for the strength and stability of the structure during construction and shall provide temporary shoring, bracing and other elements required to maintain stability until the structure is complete. It is the contractor's responsibility to be familiar with the work required in the construction documents and the requirements for executing it properly.

CONSTRUCTION LOADS: Loads on the structure during construction shall not exceed the design loads as noted in DESIGN CRITERIA & LOADS below or the capacity of partially completed construction as determined by the Contractor's SSE for Bracing/Shoring.

CHANGES IN LOADING: The contractor has the responsibility to notify the SER of any architectural, mechanical, electrical, or plumbing load imposed onto the structure that differs from, or that is not documented on the original Contract Documents (architectural / structural / mechanical / electrical or plumbing drawings). Provide documentation of location, load, size and anchorage of all undocumented loads in excess of **400** pounds. Provide marked-up structural plan indicating locations of any new equipment or loads. Submit plans to the Architect/Engineer for review prior to installation.

NOTE PRIORITIES: Plan and detail notes and specific loading data provided on individual plans and detail drawings supplements information in the Structural General Notes.

DISCREPANCIES: In case of discrepancies between the General Notes, Specifications, Plans/Details or Reference Standards, the Architect/Engineer shall determine which shall govern. Discrepancies shall be brought to the attention of the Architect/Engineer before proceeding with the work. Should any discrepancy be found in the Contract Documents, the Contractor will be deemed to have included in the price the most expensive way of completing the work, unless prior to the submission of the price, the Contractor asks for a decision from the Architect as to which shall govern. Accordingly, any conflict in or between the Contract Documents shall not be a basis for adjustment in the Contract Price.

SITE VERIFICATION: The contractor shall verify all dimensions and conditions at the site. Conflicts between the drawings and actual site conditions shall be brought to the attention of the Architect/Engineer before proceeding with the work.

ADJACENT UTILITIES: The contractor shall determine the location of all adjacent underground utilities prior to earthwork, foundations, shoring, and excavation. Any utility information shown on the drawings and details is approximate and not necessarily complete.

DESIGN CRITERIA AND LOADS

OCCUPANCY:	Risk Category of Building per 2018 IBC Table 1604.5 =	**II**

WIND DESIGN:	**MAIN WIND FORCE RESISTING SYSTEM**		
	Ultimate Design Wind Speed, V_{ULT} (MPH)		**115**
	Exposure Category		**B**
	Internal Pressure Coefficient	C_{pi} =	**+/- 0.18**
	Topographic Factor	K_{zt} =	**1.0**
	Wind Analysis procedure used:		**Directional**

WIND DESIGN: **COMPONENTS & CLADDING PRESSURES FOR DESIGN (PSF, ULTIMATE)**

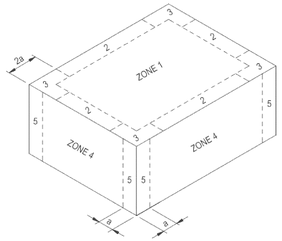

ISOMETRIC VIEW

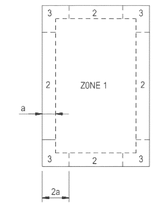

PLAN VIEW

EFFECTIVE WIND AREA (SQ. FT)

a = 5'-6"	10	20	50	100	500
ZONE 1	+16.0 PSF -38.9 PSF	+16.0 PSF -40.4 PSF	+16.0 PSF -25.2 PSF	+16.0 PSF -16.0 PSF	+16.0 PSF -16.0 PSF
ZONE 2	+16.0 PSF -56.6 PSF	+16.0 PSF -50.9 PSF	+16.0 PSF -41.5 PSF	+16.0 PSF -34.6 PSF	+16.0 PSF -34.9 PSF
ZONE 3	+16.0 PSF -67.3 PSF	+16.0 PSF -60.0 PSF	+16.0 PSF -47.9 PSF	+16.0 PSF -39.2 PSF	+16.0 PSF -39.4 PSF
ZONE 4	+21.0 PSF -22.8 PSF	+20.9 PSF -22.7 PSF	+20.1 PSF -22.0 PSF	+19.8 PSF -21.8 PSF	+19.8 PSF -21.8 PSF
ZONE 5	+21.0 PSF -28.2 PSF	+20.9 PSF -27.6 PSF	+20.1 PSF -25.4 PSF	+19.8 PSF -24.3 PSF	+19.8 PSF -24.3 PSF

1) Components and Cladding Wind Pressures are based on ASCE 7-16 Chapter 30 Part 3: Buildings with h > 60 ft.
2) Components and Cladding zone locations are based on ASCE 7-16 Table 30.5-1 for Flat Roofs Θ < 10 deg.
3) For parapets around the perimeter of the roof equal to or higher than 3 ft, Zone 3 shall be treated as Zone 2.
4) All Parapet Components and Cladding Wind Pressures shall be determined through ASCE 7-16 Figure 30.6 -2.

SEISMIC DESIGN:	**Seismic Design Category:**	**SDC =**	**B**
	Basic Structural System		**Post and beam**
	Seismic Force Resisting System		**North/South: Light Framed (wood) walls sheathed with wood structural panels rated for shear resistance East/West: Steel system not specifically detailed for seismic resistance**
	Response Modification Factor:	**R =**	**North/South: 6.5 East/West: 3.0**
	System Over Strength Factor	**Omega =**	**North/South: 2.5 East/West: 2.5**
	Deflection Amplification Factor	C_d **=**	**North/South: 4.0 East/West: 3.0**
	Site Classification per IBC 1613.3.2 & ASCE 7-16, Ch. 20 **Site Class =**		**D (Default)**
	Seismic Importance Factor per ASCE 7-16 Table 1.5-2	I_e **=**	**1.0**
	Spectral Response Acceleration (Short Period)	S_s **=**	**0.200 g**
	Spectral Response Acceleration (1-Second Period)	S_1 **=**	**0.070 g**
	Spectral Design Response Coefficient (Short Period)	S_{DS} **=**	**0.214 g**
	Spectral Design Response Coefficient (1-Second Period)	S_{D1} **=**	**0.112 g**
	Seismic response coefficient(s)	C_s **=**	**North/South: 0.033 East/West: 0.071**
	Redundancy Factor (North/South Direction)	**N/S rho=**	**1.0**
	Redundancy Factor (East/West Direction)	**E/W rho=**	**1.0**
	Design Base Shear (North/South Direction) (KIPS)		**19.4K (ASD, Wind)**
	Design Base Shear (East/West Direction) (KIPS)		**22.0K (ASD, Seismic)**
	Base shear governed by:		**North/South: Wind East/West: Seismic**
	Seismic Analysis procedure used:		**Equivalent Lateral Force (ELF)**

SNOW LOAD: (1)	Flat Roof Snow Load, (PSF)	p_f **=**	**140** (2)
	Snow Drift Loading required by Authority Having Jurisdiction?		**Yes**
	Snow Load Importance Factor	I_s **=**	**1.0** (3)
	Ground Snow Load, (PSF)	p_g **=**	**200**
	Snow Exposure Factor	C_e **=**	**B**
	Thermal Factor	C_t **=**	**1.0 (Warm) 1.2 (Cold)**
	See Roof Plan for Drift Loading		

1) Snow Load is un-reducible and includes 5 psf rain-on-snow surcharge where ground snow load is greater than zero and 20 psf or less per ASCE 7-16 Section 7.10.
2) Snow Load based on the **1986 Idaho Snow Load Map.**
3) Snow Load Importance Factor per ASCE 7-16 Table 1.5-2.

DESIGN LIVE LOADS	**AREA**	**LIVE LOADS (PSF) UNO**	**REMARKS & FOOTNOTES**
	See structural loading plans for area loads and line loads. Loads listed below are for miscellaneous items.		
	Handrails & Pedestrian Guardrails	50 PLF or 200 LB	(1)
	Stairs & Exits	100 PSF or 300 LB	Additional requirements per (2)
	Light Storage Area	125	
	Roofs	20 PSF or 300 LB	Area load is reducible. Point load per note (3), See above for Snow Load

(1) Top rail shall be designed to resist 50 PLF line load or 200 lb point load applied in any direction at any point. Intermediate rails (all those except the handrail), balusters and panel fillers shall be designed to withstand a horizontally applied normal load of 50 LB on an area not to exceed 1 ft square. These three loads are to be considered separately with worst case used for design.
(2) Need not apply concurrently with other handrail and guardrail loads; applied over not more than 1 square foot.
(3) Unless otherwise noted, point loads to be distributed over a 2.5ft x 2.5ft area and located to produce maximum load effects on structural members.

DESIGN DEAD LOADS	BIDDER DESIGN	DEAD LOADS (PSF) UNO	REMARKS & FOOTNOTES
	Roof Dead Load, Total	**10** PSF	For roof SIP design, includes self-weight of specified SIPs

SUBMITTALS

SUBMIT FOR REVIEW: SUBMITTALS of shop drawings, and product data and mill tests are required for items noted in the individual materials sections and for *bidder designed* elements.

SUBMITTAL REVIEW PERIOD: Submittals shall be made in time to provide a minimum of TWO WEEKS or 10 WORKING DAYS for review by the Architect/Engineer prior to the onset of fabrication.

GENERAL CONTRACTOR'S PRIOR REVIEW: Prior to submission to the Architect/Engineer, the Contractor shall review the submittal for completeness. Dimensions and quantities are not reviewed by the SER, and therefore, must be verified by the General Contractor. Contractor shall provide any necessary dimensional details requested by the Detailer and provide the Contractor's review stamp and signature before forwarding to the Architect/Engineer.

SHOP DRAWING REVIEW: Once the contractor has completed their review, the SER will review the submittal for general conformance with the design concept and the contract documents of the building and will stamp the submittal accordingly. Markings or comments shall not be construed as relieving the contractor from compliance with the project plans and specifications, nor departures there from. The SER will return submittals in the form they are submitted in (either hard copy or electronic). For hard copy submittals, the contractor is responsible for submitting the required number of copies to the SER for review.

SHOP DRAWING DEVIATIONS: When shop drawings (component design drawings) differ from or add to the requirements of the structural drawings they shall be designed and stamped by the responsible SSE.

DEFERRED SUBMITTALS

BIDDER-DESIGNED ELEMENTS
Submit "Bidder-Designed" deferred submittals to the Architect and SER for review. The deferred submittals shall also be submitted to the city for approval, if required by the AHJ.

Design of prefabricated, "bidder designed", manufactured, pre-engineered, or other fabricated products shall comply with the following requirements:

1) Design considers tributary dead, live, wind and earthquake loads in combinations required by IBC.
2) Design within the Deflection Limits noted herein and as specified or referenced in the IBC.
3) Design shall conform to the specifications and reference standards of the governing code.
4) Submittal shall include:
   a. Calculations prepared, stamped and signed by the SSE demonstrating code conformance.
   b. Engineered component design drawings are prepared, stamped and signed by the SSE.
   c. Product data, technical information and manufacturer's written requirements and Agency approvals as applicable.
   d. SSE may submit to the Architect/Engineer, a request to utilize relevant alternate design criteria of similar nature and generally equivalency which is recognized by the Code and acceptable to the Authority Having Jurisdiction. Submit adequate documentation of design.

DEFLECTION	**VERTICAL**	**LIMIT**
LIMITS FOR SSE / BIDDER DESIGNED	Roof Members, Dead + Live or Snow or Wind, Total Load (TL) Deflection	L / 240, where (L is span length,inches)
	Roof, Live or Snow or Wind Load (RLL)	L / 360
	Wood Floor Joist Total Load (TL)	L / 480
	Wood Floor Joists Live Load (LL)	L / 600
	SIP Panel Live Load Deflection	L / 360
	HORIZONTAL	**LIMIT and FOOTNOTE**
	Members Supporting Brittle Finishes	L / 240 (1)
	Members Supporting Flexible Finishes	L / 180 (1)

(1) Wind Load is reducible to 0.42 times the Component and Cladding Loads per Table 1604.3 footnote f.

GENERAL CONTRACTOR'S PRIOR REVIEW: Once the contractor has completed their review of the SSE component drawings, the SER will review the submittal for general conformance with the design of the building and will stamp the submittal accordingly. Review of the Specialty Structural Engineer's (SSE) shop drawings (component design drawings) is for compliance with design criteria and compatibility with the design of the primary structure and does not relieve the SSE of responsibility for that design. All necessary bracing, ties, anchorage, proprietary products shall be furnished and installed per manufacturer's instructions or the SSE's design drawings and calculations. These elements include but are not limited to:

- Handrails, Guardrails and Balcony Rail Anchorages
- Roof Mounted Components: Skylights, hatches
- Mechanical, Electrical, Plumbing & Sprinkler Hanger Plans
- Solid Web Wood Joists
- Engineered Wood Products, (PSL, LSL, LVL)
- Site Retaining Wall Panels
- Site Antenna & Foundation

INSPECTIONS, QUALITY ASSURANCE VERIFICATIONS AND TEST REQUIREMENTS

INSPECTIONS: Foundations, footings, under slab systems and framing are subject to inspection by the Building Official in accordance with IBC 110.3. Contractor shall coordinate all required inspections with the Building Official.

SPECIAL INSPECTIONS, VERIFICATIONS and TESTS: Special Inspections, Verifications and Testing shall be done in accordance with IBC Chapter 17, the STATEMENT AND SCHEDULES OF SPECIAL INSPECTIONS listed in these drawings, and the AHJ STATEMENT OF SPECIAL INSPECTION [and/or STATEMENT OF STRUCTURAL OBSERVATIONS.

STRUCTURAL OBSERVATION: per IBC Section 1704.6

Structural Observation for this project is not required per IBC Section 1704.6.

CONTRACTOR RESPONSIBILITY: Prior to issuance of the building permit, the Contractor is required to provide the Authority Having Jurisdiction a signed, written acknowledgement of the Contractor's responsibilities associated with the above Statement of Special Inspections addressing the requirements listed in IBC Section 1704.4. Contractor is referred to IBC Sections 1705.12.5 and 1705.12.6 for architectural and MEP building systems that may be subject to additional inspections (based on the building's designated Seismic Design Category listed in the CRI-

DRAWING LEGEND

MARK	DESCRIPTION	MARK	DESCRIPTION
F2.0	FOOTING SYMBOL (REFER TO SPREAD FOOTING SCHEDULE)		INDICATES WIDE FLANGE COLUMN
P1	PILE CAP SYMBOL (REFER TO PILE CAP SCHEDULE)		INDICATES HOLLOW STRUCTURAL SECTION (HSS) COLUMN OR TUBE STEEL (TS) COLUMN
1	TILT-UP/PRECAST CONCRETE WALL CONNECTION SYMBOL (REFER TO CONNECTION DETAIL)		INDICATES HOLLOW STRUCTURAL SECTION (HSS) COLUMN OR STEEL PIPE COLUMN
2W4	SHEAR WALL SYMBOL (REFER TO SHEAR WALL SCHEDULE)		INDICATES WOOD POST
0 RFI 00	REVISION TRIANGLE		INDICATES BUNDLED STUDS
1	TILT-UP/PRECAST CONCRETE WALL PANEL NUMBER (REFER TO TILT-UP/ PRECAST CONCRETE WALL ELEVATIONS)		INDICATES CONCRETE COLUMN
1	CMU WALL REINFORCING SYMBOL (REFER TO CMU WALL REINFORCING SCHEDULE)		INDICATES PRECAST CONCRETE COLUMN
8"	CONTINUITY PLATE LENGTH (REFER TO TYPICAL DETAIL)		INDICATES MOMENT FRAME CONNECTION
DS	INDICATES DOUBLE SHEAR CONNECTION (REFER TO THE DOUBLE SHEAR PLATE CONNECTIONS DETAIL)		INDICATES CANTILEVER CONNECTION
00TB	INDICATES REINFORCING TYPE (REFER TO THE REINFORCING SCHEDULE)		INDICATES DRAG CONNECTION
SR__	INDICATES NUMBER OF STUD RAIL REQUIRED AT COLUMN (REFER TO STUD RAIL DETAILS)		INDICATES A LEDGER
1	ROOF/FLOOR DIAPHRAGM NAILING SYMBOL (REFER TO DIAPHRAGM NAILING SCHEDULE)		INDICATES WOOD OR STEEL STUD BEARING WALL LINE PER KEY ON SHEET
C1 COLUMN SIZE	STEEL/CONCRETE COLUMN SYMBOL (REFER TO STEEL COLUMN SCHEDULE)	OR	INDICATES WOOD OR STEEL STUD SHEAR WALL LINE AND HOLD-DOWNS PER KEY ON SHEET
T/FTG = X'-X"	ELEVATION SYMBOL (T/ REFERS TO COMPONENT THAT THE ELEVATION REFERENCES)		INDICATES MASONRY/CMU WALL
3	STUD BUBBLE (INDICATES NUMBER OF STUDS REQUIRED IF EXCEEDS NUMBER SPECIFIED IN PLAN NOTE)		INDICATES CONCRETE/TILT-UP CONCRETE WALL
	INDICATES STEP IN FOOTING (REFER TO TYPICAL STEP IN FOOTING DETAIL)		INDICATES BEARING WALL BELOW
X SX.X	DETAILS OR SECTION CUT (DETAIL NUMBER/SHEET NUMBER)		INDICATES EXISTING WALL
00 S0.0	DETAILS OR SECTION CUT IN PLAN VIEW (DETAIL NUMBER/SHEET NUMBER)		POST-TENSION DEAD END (PLAN)
XX/SXX.XX	INDICATES LOCATION OF CONCRETE WALLS, SHEAR WALLS OR BRACED FRAME ELEVATIONS		POST-TENSION STRESSING END (PLAN)
	STRUCTURAL EXTENT SYMBOL SINGLE ARROW - END OF EXTENT DOUBLE ARROW - CONTINUOUS EXTENT ALONG THE ELEMENT LINE UNTIL THE ELEMENT IS INTERRUPTED	3	POST-TENSION PROFILE (PLAN) (IN INCHES)
			INTERMEDIATE STRESSING (PLAN)
	INDICATES DIRECTION OF DECK SPAN		

ABBREVIATIONS

L	Angle	FB	Factory-Built	PJP	Partial Joint Penetration
AB	Anchor Bolt	FD	Floor Drain	PREFAB	Prefabricated
ADDL	Additional	FDN	Foundation	PSF	Pounds per Square Foot
ADH	Adhesive	FIN	Finish	PSI	Pounds Per Square Inch
ALT	Alternate	FLR	Floor	PSL	Parallel Strand Lumber
ARCH	Architectural	FRP	Fiberglass Reinforced Plastic	P-T	Post-Tensioned
B or BOT	Bottom	FRT	Fire Retardant Treated	PT	Pressure Treated
B/	Bottom Of	FTG	Footing	R	Radius
BLDG	Building	F/	Face of	RD	Roof Drain
BLKG	Blocking	GA	Gage	REF	Refer/Reference
BMU	Brick Masonry Unit	GALV	Galvanized	REINF	Reinforcing
BP	Baseplate	GEOTECH	Geotechnical	REQD	Required
BRBF	Buckling Restrained Braced Frame	GL	Glue Laminated Timber	RET	Retaining
		GWB	Gypsum Wall Board	SB	Site-Built
BRG	Bearing	HDR	Header	SCBF	Special Concentric Braced Frame
BTWN	Between	HF	Hem-Fir		
C	Camber	HGR	Hanger	SCHED	Schedule
CB	Castellated Beam	HD	Hold-down	SER	Structural Engineer of Record
C`BORE	Counterbore	HORIZ	Horizontal		
CL or ℄	Centerline	HP	High Point	SFRS	Seismic Force-Resisting System
CLT	Cross-Laminated Timber	HSS = TS	(Hollow Structural Section)		
CIP	Cast in Place	IBC	International Building Code	SHTHG	Sheathing
CJ	Construction or Control Joint	ID	Inside Diameter	SIM	Similar
		IE	Invert Elevation	SIP	Structural Insulated Panel
CJP	Complete Joint Penetration	IF	Inside Face	SLBB	Short Leg Back-to-Back
		INT	Interior	SMF	Special Moment Frame
CLR	Clear	k	Kips	SOG	Slab on Grade
CLG	Ceiling	KSF	Kips Per Square Foot	SP	Southern Pine
CMU	Concrete Masonry Unit	LF	Lineal Foot	SPEC	Specification
COL	Column	LL	Live Load	SQ	Square
CONC	Concrete	LLBB	Long Leg Back-to-Back	SR	Studrail
CONN	Connection	LLH	Long Leg Horizontal	SF	Square Foot
CONST	Construction	LLV	Long Leg Vertical	SST	Stainless Steel
CONT	Continuous	LP	Low Point	STAGG	Stagger/Staggered
C`SINK	Countersink	LONGIT	Longitudinal	STD	Standard
CTRD	Centered	LSL	Laminated Strand Lumber	STIFF	Stiffener
DIA	Diameter	LVL	Laminated Veneer Lumber	STL	Steel
DB	Drop Beam	MAS	Masonry	STRUCT	Structural
DBA	Deformed Bar Anchor	MAX	Maximum	SWWJ	Solid Web Wood Joist
DBL	Double	MECH	Mechanical	SYM	Symmetrical
DEMO	Demolish	MEP	Mechanical, Electrical, Plumbing	T	Top
DEV	Development			T/	Top Of
DF	Douglas Fir	MEZZ	Mezzanine	T&B	Top & Bottom
DIAG	Diagonal	MFR	Manufacturer	TC AX LD	Top Chord Axial Load
DIST	Distributed	MIN	Minimum	TCX	Top Chord Extension
DL	Dead Load	MISC	Miscellaneous	TDS	Tie Down System
DN	Down	NIC	Not In Contract	T&G	Tongue & Groove
DO	Ditto	NLT	Nail-Laminated Timber	THKND	Thickened
DP	Depth/Deep	NTS	Not To Scale	THRD	Threaded
DWG	Drawing	OC	On Center	THRU	Through
(E)	Existing	OCBF	Ordinary Concentric Braced Frame	TRANSV	Transverse
EA	Each			TYP	Typical
EF	Each Face	OD	Outside Diameter	UNO	Unless Noted Otherwise
EL	Elevation	OF	Outside Face	URM	Unreinforced Masonry
ELEC	Electrical	OPNG	Opening		Unit
ELEV	Elevator	OPP	Opposite	VERT	Vertical
EMBED	Embedment	OWSJ	Open Web Steel Joist	W	Wide
EQ	Equal	OWWJ	Open Web Wood Joist	W/	With
EQUIP	Equipment	PL	Plate	W/O	Without
EW	Each Way	PAF	Powder Actuated Fastener	WHS	Welded Headed Stud
EXP	Expansion	PC	Precast	WP	Working Point
EXP JT	Expansion Joint	PERP	Perpendicular	WWF	Welded Wire Fabric
EXT	Exterior	PLWD	Plywood	±	Plus or Minus

DCI ENGINEERS®
707 W 2nd Avenue
Spokane, Washington 99201
P: (509) 455-4448 www.dci-engineers.com
CIVIL / STRUCTURAL

© Copyright 03.2023 DiVirgilio Conversano Inc. All Rights Reserved
These drawings and specifications are the property and copyright of DiVirgilio Conversano Inc. and shall not be reused on other projects without written authorization from DiVirgilio Conversano Inc.

FOR PERMIT
The Contractor shall not use these drawings for construction until Contractor receives written approval for use in construction by the authority having jurisdiction and DCI Engineers.

MILLER STAUFFER ARCHITECTS
601 E. FRONT AVE., STE 201
COEUR D' ALENE, IDAHO 83814
P 208.664.1773 F 208.667.3174
WWW.MILLERSTAUFFER.COM

GENERAL NOTES
Permit Set
02-17-2023

Powell Sta. Maintenance
Highway 12
Powell Station, Idaho

No.	Description	Date
1	DBS PERMIT REVISION	03/17/23

PROJECT # 22041-0174
PRINCIPAL JBC
PROJECT MANAGER VAV

S1.1

C:_localrevit\STRUCT-22041-0174-R2023_kevansFul7P.rvt
3/15/2023 3:32:48 PM

TERIA), including anchorage of HVAC ductwork containing hazardous materials, piping systems and mechanical units containing flammable, combustible or highly toxic materials, electrical equipment used for emergency or standby power, exterior wall panels and suspended ceiling systems.

SOILS AND FOUNDATIONS

REFERENCE STANDARDS: Conform to IBC Chapter 18 "Soils and Foundations."

GEOTECHNICAL REPORT: Recommendations contained in **Geotechnical Engineering Evaluation Powell Mainteancne Building, CD22068A** by **STRATA** dated January 19, 2023 were used for design.

CONTRACTOR'S RESPONSIBILITIES: Contractor shall be responsible to review the Geotechnical Report and shall follow the recommendations specified therein including, but not limited to, subgrade preparations, pile installation procedures, ground water management and steep slope Best Management Practices."

GEOTECHNICAL SUBGRADE INSPECTION: The Geotechnical Engineer shall inspect all sub-grades and prepared soil bearing surfaces, prior to placement of foundation reinforcing steel and concrete. Geotechnical Engineers shall provide a letter to the owner stating that soils are adequate to support the "Allowable Foundation Bearing Pressure(s)" shown below.

DESIGN SOIL VALUES:

Allowable Foundation Bearing Pressure	2500	PSF – Structural Fill
Passive Lateral Pressure	455	PSF/FT
Active Lateral Pressure (unrestrained)	36	PSF/FT
At-Rest Lateral Pressure (restrained)	57	PSF/FT
Coefficient of Sliding Friction	0.40	

FOUNDATIONS and FOOTINGS: Foundations shall bear on compacted structural fill as per the geotechnical report. Exterior perimeter footings shall bear not less than **30** inches below finish grade, unless otherwise specified by the geotechnical engineer and/or the building official.

FOOTING DEPTH: Tops of footings shall be as shown on plans with vertical changes as indicated with steps in the footings; locations of steps shown as approximate and shall be coordinated with the civil grading plans.

SLABS-ON-GRADE: All slabs-on-grade shall bear on compacted structural fill per the geotechnical report. All moisture sensitive slabs-on-grade or those subject to receive moisture sensitive coatings/covering shall be provided with an appropriate capillary break and vapor barrier/retardant over the subgrade prepared and installed as noted in the geotechnical report, barrier manufacturer's written recommendations and coordinated with the finishes specified by the Architect.

CAST-IN-PLACE CONCRETE

REFERENCE STANDARDS: Conform to:
(1) ACI 301-16 "Specifications for Structural Concrete"
(2) IBC Chapter 19 "Concrete"
(3) ACI 318-14 "Building Code Requirements for Structural Concrete"
(4) ACI 117-10 "Specifications for Tolerances for Concrete Construction and Materials"

FIELD REFERENCE: The contractor shall keep a copy of ACI Field Reference manual, SP-15, "Standard Specifications for Structural Concrete (ACI 301) with Selected ACI and ASTM References."

CONCRETE MIXTURES: Conform to ACI 301 Section 4 "Concrete Mixtures" and IBC Section 1904.1.

MATERIALS: Conform to ACI 301 Section 4.2.1 "Materials" for requirements for cementitious materials, aggregates, mixing water and admixtures.

SUBMITTALS: Provide all submittals required by ACI 301 Section 4.1.2. Submit mix designs for each mix in the table below. Substantiating strength results from past tests shall not be older than 24 months per ACI 318 Section 26.4.3.1 (b).

TABLE OF MIX DESIGN REQUIREMENTS

Member Type/Location	Strength f'c (psi)	Test Age (days)	Nominal Maximum Aggregate	Exposure Class	Max W/C Ratio	Air Content	Notes (1 to 8 Typical UNO)
Footings	3000	28	1"	-	-	-	-
Exterior Slabs on Grade & Sidewalks	4500	28	1"	F2	0.45	6%	9
Interior Slabs on Grade	3000	28	1"	-	0.45	-	9
Stem Walls & Curbs (Not Exposed)	3000	28	1"	-	-	-	9
Architectural / Exposed Stem Walls & Curbs	4500	28	½"	F1	0.45	6%	9
Braced Frame Footings and Piers	4500	28	1"	-	-	-	-

Table of Mix Design Requirements Notes:

(1) W/C Ratio: Water--cementitious material ratios shall be based on the total weight of cementitious materials. Maximum ratios are controlled by strength noted in the Table of Mix Design Requirements and durability requirements given in ACI 318 Section 19.3.

(2) Cementitious Materials:
a. DCI encourages the reduction of cement content and/or the use of blended hydraulic cements. Where requirements of this section prohibit inclusion of any of these mixes, contact DCI for further coordination.
b. The use of fly ash, other pozzolans, silica fume, or slag shall conform to ACI 318 Sections 19.3.2 and 26.4.2.2.
c. For concrete used in elevated floors, minimum cementitious-materials content shall conform to ACI 301 Table 4.1.2.9. Acceptance of lower cement content is contingent on providing supporting data to the SER for review and acceptance.
d. Cementitious materials shall conform to the relevant ASTM standards listed in ACI 318 Section 26.4.1.1.1(a).

(3) Air Content: Conform to ACI 318 Section 19.3.3.1. Minimum standards for exposure class are noted in the table. If freezing and thawing class is not noted, air content given is that required by the SER. Tolerance is ±1-½%. Air content shall be measured at point of placement.

(4) Aggregates shall conform to ASTM C33.

(5) Slump: Conform to ACI 301 Section 4.2.2.2. Slump shall be determined at point of placement.

(6) Chloride Content: Conform to ACI 318 Table 19.3.2.1.

(7) Non- chloride accelerator: Non-chloride accelerating admixture may be used in concrete placed at ambient temperatures below 50°F at the contractor's option.

(8) ACI 318, Section 19.3.1.1 exposure classes shall be assumed to be F0, S0, W0, and C0 unless different exposure classes are listed in the Table of Mix Design Requirements that modify these base requirements.

(9) Structural design is based on strength of 2500 psi and therefore does not require special inspection. The greater compressive strength is specified for serviceability.

FORMWORK & RESHORING: Conform to ACI 301 Section 2 "Formwork and Form Accessories." Removal of Forms shall conform to Section 2.3.2 except strength indicated in Section 2.3.2.5 shall be 0.75 f' c.

MEASURING, MIXING, AND DELIVERY: Conform to ACI 301 Section 4.3.

HANDLING, PLACING, CONSTRUCTING AND CURING: Conform to ACI 301 Section 5. In addition, hot weather concreting shall conform to ACI 305R-10 and cold weather concreting shall conform to ACI 306R-10.

CONSTRUCTION JOINTS: Conform to ACI 301 Sections. 2.2.2.5 and 5.3.2.6. Construction joints shall be located and detailed as on the construction drawings. Submit alternate locations per ACI 301 Section 5.1.2.4(a) for review and approval by the SER two weeks minimum prior to forming. Use of an acceptable adhesive, surface retardant, portland cement grout or roughening the surface is not required unless specifically noted on the drawings.

EMBEDDED ITEMS: Position and secure in place expansion joint material, anchors and other structural and non-structural embedded items before placing concrete. Contractor shall refer to mechanical, electrical, plumbing and architectural drawings and coordinate other embedded items.

GROUT: Use 7000 psi non-shrink grout under column base plates.

POST-INSTALLED ANCHORS to CONCRETE: Anchor location, type, diameter and embedment shall be as indicated on drawings. Reference the POST INSTALLED ANCHORS section for applicable Post-Installed Anchor Adhesives. Anchors shall be installed and inspected in strict accordance with the applicable ICC-Evaluation Service Report (ESR). Special inspection shall be per the TESTS and INSPECTIONS section.

SHRINKAGE: Conventional concrete slabs will continue to shrink after initial placement of concrete. Contractor and subcontractor shall coordinate jointing and interior material finishes to provide adequate tolerance for expected shrinkage.

STRENGTH TESTING AND ACCEPTANCE:

Testing: Obtain samples and conduct tests in accordance with ACI 301 Section 1.6.3.2. Additional samples may be required to obtain concrete strengths at alternate intervals than shown below.

- Cure 4 cylinders for 28-day test age test 1 cylinder at 7 days, test 2 cylinders at 28 days, and hold 1 cylinder in reserve for use as the Engineer directs. After 56 days, unless notified by the Engineer to the contrary, the reserve cylinder may be discarded without being tested for specimens meeting 28-day strength requirements.
- The number of cylinders indicated above reference 6 by 12 in cylinders. If 4 by 8 in cylinders are to be used, additional cylinders must be cured for testing of 3 cylinders at test age per the table of mix design requirements.

Acceptance. Strength is satisfactory when:

(1) The averages of all sets of 3 consecutive tests equal or exceed the specified strength.

(2) No individual test falls below the specified strength by more than 500 psi.

A "test" for acceptance is the average strength of two 6 by 12 in. cylinders or three 4 by 8 in. cylinders tested at the specified test age.

CONCRETE REINFORCEMENT

REFERENCE STANDARDS: Conform to:
(1) ACI 301-16 "Standard Specifications for Structural Concrete", Section 3 "Reinforcement and Reinforcement Supports."
(2) ACI SP-66(04) "ACI Detailing Manual"
(3) CRSI MSP-09, 28th Edition, "Manual of Standard Practice."
(4) ANSI/AWS D1.4: 2005, "Structural Welding Code - Reinforcing Steel."
(5) IBC Chapter 19-Concrete.
(6) ACI 318-14 "Building Code Requirements for Structural Concrete."
(7) ACI 117-10 "Specifications for Tolerances for Concrete Construction and Materials"

SUBMITTALS: Conform to ACI 301 Section 3.1.2 "Submittals." Submit placing drawings showing fabrication dimensions and placement locations of reinforcement and reinforcement supports.

MATERIALS:

Reinforcing Bars.....ASTM A615, Grade 60, deformed bars.
Bar Supports .....CRSI MSP-09, Chapter 3 "Bar Supports."
Tie Wire .....16 gage or heavier, black annealed.

FABRICATION: Conform to ACI 301, Section 3.2.2. "Fabrication", and ACI SP-66 "ACI Detailing Manual."

WELDING: Bars shall not be welded unless authorized. When authorized, conform to ACI 301, Section 3.2.2.2. "Welding", AWS D1.4, and provide ASTM A706, grade 60 reinforcement.

PLACING: Conform to ACI 301, Section 3.3.2 "Placing." Placing tolerances shall conform to ACI 117.

CONCRETE COVER: Conform to the following cover requirements unless noted otherwise in the drawings.
Concrete cast against earth .....3"
Concrete exposed to earth or weather.....2"

SPLICES: Conform to ACI 301, Section 3.3.2.7, "Splices". Refer to "Typical Lap Splice and Development Length Schedule" for typical reinforcement splices. Splices indicated on individual sheets shall control over the schedule. Mechanical connections may be used when approved by the SER.

FIELD BENDING: Conform to ACI 301 Section 3.3.2.8. "Field Bending or Straightening." Bar sizes #3 through #5 may be field bent cold the first time. Subsequent bends and other bar sizes require preheating. Do not twist bars. Bars shall not be bent past 45 degrees.

BRICK VENEER

REFERENCE STANDARDS: Conform to:

1) IBC Chapter 14 "Exterior Walls."
2) TMS 402-16 "Building Code Requirements for Masonry Structures."
3) TMS 602-16 "Specification for Masonry Structures."

SUBMITTALS: Submit product specific information on anchor size, type and capacities with corresponding ICC-ESR reports regarding wire ties, sheet metal connector pieces, screws, and expansion anchors to the Architect/ Engineer for review.

MATERIALS:
1) BRICK VENEER: Conform to ASTM C216 "Standard Specification for Facing Brick (Solid Masonry Units Made from Clay or Shale)", Grade MW.

2) Mortar: Conform to ASTM C270, Type S, and IBC Section 2103.2 "Mortar."

3) JOINT REINFORCING: Conforms to ASTM A951 "Standard Specification for Steel Wire for Masonry Joint Reinforcement". All joint reinforcing shall be hot dip galvanized.

4) ANCHORS: Anchor ties shall be the Hohmann & Barnard seismic anchors. Anchor ties shall be adjustable two-piece anchors made of 14 gage or 12 gage galvanized metal and/or W2.8 (3/16" diameter) galvanized wire that shall be engineered to attach:
- to the face of Masonry or concrete with a ¼" expansion bolt or screw anchor for concrete or masonry embedded 2" minimum into the concrete or masonry.
- to wood stud with two #9 (0.177" diameter) screws per anchor embedded at least 1 ¼" into the wood stud.

All parts of the veneer anchorage system shall be fabricated of similar metals with similar coatings to reduce the possibility of galvanic corrosion occurring.

Brick veneer in Seismic Design Category A, B, and C and all brick veneer not laid in a running bond pattern shall have continuous joint reinforcing of W1.7 (0.148" diameter) wires at a maximum vertical spacing of 20"oc. Lap wires 10" at splices.

Pintle anchors shall have at least two pintle legs of wire size W2.8 (3/16" diameter) each and shall have an offset not exceeding ½" from the horizontal plane of the plate anchored to the structure.

Both wire and sheet-metal anchors shall extend into the veneer a minimum of 1½" and shall have a minimum of 5/8" mortar cover on the outside face.

All anchors shall adjust 1-¼" up or down to allow for different course heights and shall allow at least ½" horizontal in-plane and ¼" vertical in-plane movement to accommodate expansion, contraction, shrinkage and other movement.

Coordinate expansion joint locations with the architect prior to erection. Typically expansion joints should be installed at 24" from corners on one side of the corner, at intersecting walls, at changes in wall height, at changes in wall thickness and at 20' maximum on center.

CONSTRUCTION OVER STUDS: When applied over wood or metal stud construction, the studs shall be spaced a maximum of 16 inches on centers and approved paper shall first be applied over the sheathing or wires between studs except as otherwise provided in IBC Sections 1402-1405. An air space of at least 1 inch should be maintained between the backing and the veneer. The air space must be kept free and clear of debris and mortar droppings.

POST-INSTALLED ANCHORS (INTO CONCRETE AND MASONRY)

REFERENCE STANDARDS: Conform to:
1) IBC Chapter 19 "Concrete"
2) ACI 318-19 "Building Code Requirements for Structural Concrete"
3) IBC Chapter 21 "Masonry"
4) TMS 402-16 "Building Code Requirements for Masonry Structures"

POST-INSTALLED ANCHORS: Install only where specifically shown in the details or allowed by SER. All post-Installed anchors types and locations shall be approved by the SER and shall have a current ICC-Evaluation Service Report that provides relevant design values necessary to validate the available strength exceeds the required strength. Submit current manufacturer's data and ICC ESR report to SER for approval regardless of whether or not it is a pre-approved anchor. Anchors shall be installed in strict accordance to ICC-ESR and the manufacturer's printed installation instructions (MPII) in conjunction with edge distance, spacing and embedment depth as indicated on the drawings. The contractor shall arrange for a manufacturer's field representative to provide installation training for all products to be used, prior to the commencement of work. Only trained installer shall perform post installed anchor installation. A record of training shall be kept on site and be made available to the SER as requested. Adhesive anchors installed in horizontally or upwardly inclined orientation shall be performed by a certified adhesive anchor installer (AAI) as certified through ACI/CRSI or approved equivalent. Proof of current certification shall be submitted to the engineer for approval prior to commencement of installation. No reinforcing bars shall be damaged during installation of post-installed anchors. Special inspection shall be per the TESTS and INSPECTIONS section. Anchor type, diameter and embedment shall be as indicated on drawings.

1. ADHESIVE ANCHORS: The following Adhesive-type anchoring systems have been used in the design and shall be used for anchorage to CONCRETE, as applicable and in accordance with corresponding current ICC ESR report. Reference the corresponding ICC ESR report for required minimum age of concrete, concrete temperature range, moisture condition, light weight concrete, and hole drilling and preparation requirements. Drilled-in anchor embedment lengths shall be as shown on drawings, or not less than 7 times the anchor nominal diameter (7D). Adhesive anchors are to be installed in concrete aged a minimum of 21 days, unless otherwise specified in the ICC ESR report.
   a. SIMPSON "SET-3G" – ICC ESR 4057 for anchorage to CONCRETE only
2. EXPANSION ANCHORS: The following Expansion type anchors are pre-approved for anchorage to CONCRETE or MASONRY in accordance with corresponding current ICC ESR report:
   a. SIMPSON "STRONG-BOLT 2" – ICC ESR-3037 for anchorage to CONCRETE
3. SCREW ANCHORS: The following Screw type anchor is pre-approved for anchorage to CONCRETE or MASONRY in accordance with corresponding current ICC ESR report:
   a. SIMPSON "TITEN HD" – ICC ESR-2713 for CARBON STEEL to CONCRETE

STRUCTURAL STEEL

REFERENCE STANDARDS:
Conform to:
1) IBC Chapter 22 – "Steel"
2) ANSI/AISC 303-16 – "Code of Standard Practice for Steel Buildings & Bridges"
3) AISC – "Manual of Steel Construction", Fifteenth Edition (2016)
4) ANSI/AISC 360-16 – "Specification for Structural Steel Buildings"
5) AWS D1.1:2015 – "Structural Welding Code – Steel"
6) 2014 RCSC – "Specification for Structural Joints using High-Strength Bolts"

SUBMITTALS: Submit the following documents to the SER for review:

(1) SHOP DRAWINGS complying with AISC 360 Sections M1and N3 and AISC 303 Section 4.
(2) ERECTION DRAWINGS complying AISC 360 Sections M1and N3 and AISC 303 Section 4.
(3) Weld Procedure Specifications (WPS's) for shop and field welding.

Make copies of the following documents "Available upon Request" to the SER or Owner's Inspection Agency in electronic or printed form prior to fabrication per AISC 360 Section N3.2 requirements:

(1) Fabricator's written Quality Control Manual that includes, as a minimum:
   a. Material Control Procedures
   b. Inspection Procedures
   c. Non-conformance Procedures
(2) Steel & Anchor Rod suppliers' Material Test Reports (MTR's) indicating the compliance with specifications.
(3) Fastener manufacturer's Certification documenting conformance with the specification.
(4) Filler metal manufacturer's product data for SMAW, FCAW and GMAW indicating:
   a. Product specification compliance
   b. Recommended welding parameters
   c. Recommended storage and exposure requirements including baking
   d. Limitations of use
(5) Welded Headed (Shear) Stud Anchors Manufacturer's certification indicating the meet specifications.
(6) Weld Procedure Specifications (WPS's) for shop and field welding.
(7) Manufacturer's Certificates of Conformance for electrodes, fluxes and gases (welding consumables).
(8) Procedure Qualification Records (PQR's) for WPS's that are not prequalified in accordance with AWS.
(9) Welding personnel Performance Qualification Records (WPQR) and continuity records conforming to AWS standards.

MATERIALS:
Structural steel materials shall conform to materials and requirements listed in AISC 360 section A3 including, but not limited to:

Wide Flange (W), Tee (WT) Shapes	ASTM A992,	Fy = 50 ksi
Channel (C) & Angle (L) Shapes	ASTM A36,	Fy = 36 ksi
Structural Plate (PL)	ASTM A36,	Fy = 36 ksi
Hollow Structural Section – Square/Rect (HSS)	ASTM A500, Grade C	Fy = 50 ksi
High Strength, Heavy Hex Structural Bolts	ASTM F3125 Gr. A325/F1852, Type 1 or 3, Plain	
Heavy Hex Nuts	ASTM A563, Grade and Finish per RCSC Table 2.1	
Washers (Hardened Flat or Beveled)	ASTM F436, Grade and Finish per RCSC Table 2.1	
Anchor Rods (Anchor Bolts, typical)	ASTM F1554, Gr. 36	
Mild Threaded Rods	ASTM A36,	Fy = 36 ksi
Welded Headed Stud Anchors	ASTM A108 – Nelson/TRW S3L	

STRUCTURAL JOINTS USING HIGH-STRENGTH BOLTS:

1) ASTM F3125 Gr. A325-N bolts – "threads NOT excluded in the shear plane".
2) High-strength bolted joints have been designed as "BEARING" connections.
3) Provide ASTM Bolt Grade and Type as specified in the Materials section above.
4) Provide Washers over outer ply of slotted holes and oversize holes per RCSC Table 6.1.
5) Provide Nut and Washer grades, types and finishes conforming to RCSC specification Table 2.1.
6) Provide *fastener assemblies* from a single supplier.
7) Joint Types shall be:
   a. ST - "Snug Tight", for typical beam end "shear" connections, unless noted otherwise.
   b. SC - "Slip Critical", where specifically indicated. Provide with Class A Faying surface.
8) Install bolts in joints in accordance with the RCSC Specification Section 8 and Table 4.1.
9) Inspection is per RCSC Section 9.

ANCHORAGE to CONCRETE:

1) EMBEDDED STEEL PLATES for Anchorage to Concrete: Plates (PL) embedded in concrete with studs (WHS) or dowel bar anchors (DBA) shall be of the sizes and lengths as indicated on the plans with minimum 1/2" dia. WHS x 6" long but provide not less than ¾" interior cover or 1 ½" exterior cover to the opposite face of concrete, unless noted otherwise.

2) COLUMN ANCHOR RODS and BASE PLATES: All columns (vertical member assemblies weighing over 300 pounds) shall be provided with a **minimum of four ¾" diameter anchor rods**. Column base plates shall be at least ¾" thick, unless noted otherwise. Cast-in-place anchor rods shall be provided unless otherwise approved by the Engineer. Unless noted otherwise, embedment of cast-in-place anchor rods shall be 12 times the anchor diameter (12D).

FABRICATION:

1) Conform to AISC 360 Section M2 "Fabrication" and AISC 303 Section 6 "Shop Fabrication".

2) Quality Control (QC) shall conform to:
   a. AISC 360 Chapter N "Quality Control and Quality Assurance" and
   b. AISC 303 Section 8 "Quality Control".
   c. Fabricator and Erector shall establish and maintain written Quality Control (QC) procedures per AISC 360 section N3.
   d. Fabricator shall perform self-inspections per AISC 360 section N5 to ensure that their work is performed in accordance with Code of Standard Practice, the AISC Specification, Contract Documents and the Applicable Building Code.
   e. QC inspections may be coordinated with Quality Assurance inspections per Section N5.3 where fabricators QA procedures provide the necessary basis for material control, inspection, and control of the workmanship expected by the Special Inspector.

WELDING:
1) Welding shall conform to AWS D1.1 with Prequalified Welding Processes except as modified by AISC 360 section J2. Welders shall be qualified in accordance with AWS requirements.
2) Use 70ksi strength, low-hydrogen type electrodes (E7018) or E71T as appropriate for the process selected.
3) Welding of high strength anchor rods is prohibited unless approved by Engineer.
4) Welding of headed stud anchors shall be in accordance with AWS D1.1 Chapter 7 "Stud Welding".

ERECTION:

1) Conform to AISC 360 Section M4 "Erection" and AISC 303 Section 7 "Erection".
2) Conform to AISC 360 Chapter N "Quality Control and Quality Assurance" and AISC 303 Section 8.
   a. The Erector shall maintain detailed erection quality control procedures that ensure that the work is performed in accordance with these requirements and the Contract Documents.
3) Steel work shall be carried up true and plumb within the limits defined in AISC 303 Section 7.13.
4) High strength bolting shall comply with the RCSC requirements including RCSC Section 7.2 "Required Testing", as applicable and AISC 360 Chapter J, Section M2.5 and Section N5.6.
5) Welding of HEADED STUD ANCHORS shall be in accordance with AWS D1.1 Chapter 7 "Stud Welding.
6) Provide Headed (Shear) Stud Anchors welded through the metal deck to tops of beams denoted in plans.
7) The contractor shall provide temporary bracing and safety protection required by AISC 360 Section M4.2 and AISC 303 Section 7.10 and 7.11.

PROTECTIVE COATING REQUIREMENTS:

1) SHOP PAINTING: Conform to AISC 360 Section M3 and AISC 303 Section 6.5 unless otherwise specified by the project specifications.

2) INTERIOR STEEL:
   a. Unless noted otherwise, ***do not paint*** any of the steel surfaces meeting the following conditions:
      - Concealed by the interior building finishes,
      - Fireproofed,
      - Embedded in concrete,
      - Welded; if area requires painting, do not paint until after weld inspections and non-destructive testing requirement, if any, are satisfied.
   b. Interior steel, exposed to view, shall be painted with one coat of shop primer unless otherwise indicated in the project specifications. Field touch-ups to match the finish coat or as otherwise indicated in the project specifications.

3) EXTERIOR STEEL: Exposed exterior steel shall be protected by either:
   a. Paint with an exterior multi-coat system as per the architect. Field touch-up painting shall be to match top coat.

WOOD FRAMING

REFERENCE STANDARDS: Conform to:
(1) IBC Chapter 23 "WOOD"
(2) NDS - "2018 National Design Specification (NDS) for Wood Construction"
(3) ANSI/AWC – SDPWS-15; Special Design Provisions for Wind and Seismic
(4) APA D510C-12 Plywood Design Specification
(5) ANSI/TPI 1-2014 "National Design Standard for Metal-Plate-Connected Wood Truss Construction"
(6) BCSI B1 "Guide to Good Practice for Handling, Installing, Restraining & Bracing of Trusses"
(7) TPI DSB "Recommended Design Specification for Temporary Bracing of Metal Plate Connected Wood Trusses"
(8) APA Report TT-045B "Minimum Nail Penetration for Wood Structural Panel Connections Subject to Lateral Loads"
(9) APA Report TT-061 "1-5/16 Inch-Thick I-Joist Flanges and Diaphragm Nail Penetration

SUBMITTALS: Submit shop drawings to the Architect/Engineer for review. Shop drawings shall include member size, spacing, camber, material type, grade, shop and field assembly details and connections, types and location of bolts and other fasteners. Supply shop drawings for the following:
(1) Glued laminated members
(2) LVL members
(3) LSL members
(4) Tapered & Parallel Wood I Joists (Solid web-wood joists)

DEFERRED SUBMITTALS: Submit product data and proof of ICC approval for framing members and fasteners that have been designed by others. Submit calculations prepared by the SSE in the state of Idaho for all members and connections designed by others along with shop drawings. All necessary bridging, blocking, blocking panels and web stiffeners shall be detailed and furnished by the supplier. Temporary and permanent bridging shall be installed in conformance with the manufacturer's specifications. Deflection limits shall be as noted under DEFFERRED SUBMITTLALS section specific details. Products included are:

- Solid web wood joists (I-joists)
- Structural Insulated Panels-SIP (Deferred Submittal): The project design was based on **Premier Industries** R-Control SIP per ICC Evaluation Service Report ESR-4524. Product shall be submitted as a Deferred Submittal and shall be designed for the loads specified. Submittals shall demonstrate conformance to the vertical and horizontal loading requirements noted on the drawing. Alternate products by other manufacturers may be substituted provided they have current ICC approval for equivalent or greater load and stiffness properties and are reviewed and approved by the Structural Engineer of Record.

IDENTIFICATION: All sawn lumber and pre-manufactured wood products shall be identified by the grade mark or a certificate of inspection issued by the certifying agency.

MATERIALS:

- Sawn Lumber: Conform to grading rules of WWPA, WCLIB or NLGA and Table below. Finger jointed studs acceptable at interior walls only.

TABLE of SOLID SAWN LUMBER

Member Use	Size	Species	Grade
Wall Stud/ Top & Bottom Plates	2x4, 3x4, 2x6, 3x6	Doug Fir Larch	No. 2
Sill Plate (at concrete)	2x4, 3x4, 2x6, 3x6	PT Doug Fir Larch	No. 2

- Glued Laminated Timber: Conform to ANSI 117-**2015** "Standard Specifications for Structural Glue-laminated Timber of Softwood Species, Manufacturing and Design" and ANSI A190.1 "Structural Glued Laminated Timber." Camber all glued laminated beams, except cantilevered and continuous beams, to 3000' radius, unless shown otherwise on the plans. Fabricate cantilevered and continuous beams flat, unless shown otherwise on plans.

TABLE of GLULAM and GRADE

Member	Sizes	Species	Comb. Symbol	Uses
Beams	All	DF/DF	24F–V4	Simple Spans
Beams	All	DF/DF	24F–V8	Continuous or with Cantilever Spans

- Wood Structural Sheathing (Plywood): Wood APA-rated structural sheathing includes: all veneer plywood, oriented strand board, waferboard, particleboard, T1-11 siding, and composites of veneer and wood based material with T&G joint. **Architect** may disallow OSB. Confirm with **Architect**. Conform to "Construction and Industrial Plywood" based on Product Standard PS 1-09 by the U.S. Dept. of Commerce, and "Performance Standard for Wood-Based Structural-Use Panels" based on Product Standard PS 2-10 by the U.S. Dept. of Commerce and "Plywood Design Specification" based on APA D510C-12 by the American Plywood Association. Unless noted otherwise, sheathing shall comply with the following table:

TABLE of SHEATHING - Use, Minimum Thickness and Minimum APA Rating

Location	Thickness	Span Rating	Plywood Grade	Exposure
Floor	3/4" T&G	24 OC	STURD-I-FLOOR	1
Walls	15/32"	32/16	C-D	1

Unless noted otherwise on drawings, install roof and floor panels with long dimension across supports and with panel continuous over two or more spans. End joints shall occur over supports.

- Timber Connectors: Shall be "Strong Tie" by Simpson Company as specified in their latest catalog. Alternate connectors by other manufacturers may be substituted provided they have current ICC approval for equivalent or greater load capacities and are reviewed and approved by the SER prior to ordering. Connectors shall be installed per the manufacturer's instructions. Where connector straps connect two members, place one-half of the nails or bolts in each member. Where straps are used as hold-downs, nail straps to wood framing just prior to drywall application, as late as possible in the framing process to allow the wood to shrink and the building to settle. Premature nailing of the strap may lead to strap buckling and potential finish damage.

  Where connectors are in exposed exterior applications in contact with preservative treated wood (PT) other than CCA, connectors shall be either batch hot-dipped galvanized (HDG), mechanically galvanized (ASTM B695, Class 55 minimum) stainless steel, or provided with 1.85 oz/sf of zinc galvanizing equal to or better than Simpson ZMAX finish.

  Nail straps to wood framing as late as possible in the framing process to allow the wood to shrink and the building to settle. Premature nailing of the strap may lead to strap buckling and potential finish damage.

- Fasteners (nails, bolts, screws, etc) attaching timber connectors (joist hangers, post caps and bases, etc) to PT wood shall have similar corrosion resistance properties (matching protective treatments) as the protected connector. Fasteners (nails, bolts, screws, etc) attaching sawn timber members or sheathing (shear walls) to PT wood shall be corrosion resistant; nails and lag bolts shall be either HDG (ASTM A153) or stainless steel. Verify the suitability of the fastener protection/coating with the wood treatment chemical manufacturer/ supplier.

  Provide washers under the heads and nuts of all bolts and lag screws bearing on wood.

- Lag Bolts/Bolts: Conform to ASTM A307 and IBC Section 2304.10.

- Nails and Staples: Conform to ASTM F1667 and IBC Sections 2303.6 and 2304.10.

- Engineered Wood Products (TrusJoist): The following materials are based on lumber manufactured by TrusJoist and were used for the design as shown on the plans. Alternate products by other manufacturers may be substituted provided they have current ICC approval for equivalent or greater load and stiffness properties and are reviewed and approved by the Structural Engineer prior to ordering.

DCI ENGINEERS®
707 W 2nd Avenue
Spokane, Washington 99201
P: (509) 455-4448 www.dci-engineers.com
CIVIL / STRUCTURAL

© Copyright 03.2023 DiNardo Conversano Inc. All Rights Reserved
This document is instrument of service and shall remain the property of DiNardo Conversano Inc. It may not be reproduced or used in part, without written permission from DiNardo Conversano Inc.

FOR PERMIT
The Contractor shall not use these drawings for construction until Contractor receives written approval for use in construction by the authority having jurisdiction and DCI Engineers.

MILLER STAUFFER ARCHITECTS
601 E. FRONT AVE., STE 201
COEUR D' ALENE, IDAHO 83814
P 208.664.1773 F 208.667.3174
WWW.MILLERSTAUFFER.COM

GENERAL NOTES

Permit Set
02-17-2023

Powell Sta. Maintenance
Highway 12
Powell Station, Idaho

PROFESSIONAL ENGINEER 13697 STATE OF IDAHO 02/17/23

No.	Description	Date
1	DBS PERMIT REVISION	03/17/23

PROJECT # 22041-0174
PRINCIPAL JBC
PROJECT MANAGER VAV

S1.2

C:_localtevit\STRUCT-22041-0174-R2023_kevanFul47P.rvt
3/15/2023 3:32:53 PM

a. Laminated Strand Lumber (LSL): Conform to **ICC ES Report No. ESR-1387** or CCMC Report No. 12627–R.

TABLE of ENGINEERED WOOD Requirements

Type	Use	Widths	E(10^6)	Fb	Fv	Fc//
			PSI	PSI	PSI	PSI
LSL Rimboard	Rimboard or Stair Stringer	1 ½"	1.3E	1,700	425	1,835

- Engineered Wood Products (RedBuilt): The following materials are based on lumber manufactured by RedBuilt and were used for the design as shown on the plans. Alternate products by other manufacturers may be substituted provided they have current ICC approval for equivalent or greater load and stiffness properties and are reviewed and approved by the Structural Engineer prior to ordering.

a. Laminated Veneer Lumber (RedLam LVL): Conform to **ICC ES Report No. ESR-2993** or CCMC Report No. 12627–R.

b. Parallel Chord I-JOISTS (Deferred Submittal): Conform to **ICC Report No. ESR-2994**. The manufacturer shall design the joists for the spans and conditions shown on the plans. Joists shall have LVL chords and solid wood webs. Joists shall be tapered or parallel as shown on the plans.

TABLE of ENGINEERED WOOD Requirements

Type	Use	Widths	E(10^6)	Fb	Fv	Fc//
			PSI	PSI	PSI	PSI
RedLam LVL	Header, Beam or Column	1 ¾", 3 ½", 5 ¼", 7"	2.0E	2,900	285	2,635

NAILING REQUIREMENTS: Conform to IBC Section 2304.10 "Connections and fasteners." Unless noted on plans, nail per Table 2304.10.1. Nailing for roof/floor diaphragms/shear walls shall be per drawings. Nails shall be driven flush and shall not fracture the surface of sheathing. Alternate nails may be used but are subject to review and approval by the Structural Engineer. Substitution of staples for the nailing of rated sheathing is subject to review by the structural engineer prior to construction.

STANDARD LIGHT-FRAME CONSTRUCTION: Unless noted on the plans, construction shall conform to IBC Section 2308 "Conventional Light-Frame Construction."

NAILERS ON STEEL COLUMNS and BEAMS: Wood 3x nailers are generally required on all HSS columns and steel beams abutting or embedded within wood framing. Unless noted otherwise, attach with 5/8" diameter bolts or welded studs at 16" on centers. Unless noted otherwise, wood nailers on beams supporting joist hangers shall not overhang the beam flange by more than ¼".

WOOD SHRINKAGE AND EXPANSION: Wood materials will expand or contract based on relative changes in moisture. The contractor is responsible for means and methods of construction related to mitigating and managing the effects of changes in moisture.

MOISTURE CONTENT: The contractor shall make provisions during handling and construction to prevent the structural wood members from exceeding the appropriate moisture content limits. The moisture content for solid sawn wood material used for this project shall not exceed 19%. The moisture content for engineered wood products, laminated lumber and sheathing shall not exceed the limits required by the manufacturer or 12%, whichever is less. The moisture content limits may be more stringent for particular product requirements (eg. finishes, cladding, insulation systems, etc.). The contractor shall refer to the Architect's drawings, project specifications, or installer/product requirements for additional requirements.

SHRINKAGE COMPENSATION FOR MECHANICAL, ELECTRICAL, AND PLUMBING SYSTEMS: MEP systems, including ductwork, pipes, and other elements that run continuously between levels shall be installed/designed in such a manner to accommodate shrinkage in the wood framing. Wood shrinkage amounts will vary depending on the construction process and materials used. The anticipated shrinkage under typical conditions is expected to range between 1/8" and 1/4" per floor.

CLADDING COMPATIBILITY: The Architect/Owner and contractor shall review the cladding, finishes, insulation systems, other non-structural components and construction procedures proposed for the project with respect to their performance over wood framing. EIFS systems should be avoided on wood-framed projects due to problems with moisture proofing. Note that DCI is not responsible for the attachment of the cladding to the wood studs which needs to be verified and provided by the cladding supplier.

PRESERVATIVE TREATMENT (PT): Wood materials that are required to be "treated wood" in accordance with IBC Section 2304.12. "Protection Against Decay and Termite Protection" shall conform to the appropriate standards of the American Wood-Preservers Association (AWPA) for sawn lumber, glued laminated timber, round poles, wood piles and marine piles. Follow American Lumber Standards Committee (ALSC) quality assurance procedures. Products shall bear the appropriate mark. Fasteners or anchors in treated wood shall be of stainless steel or hot-dipped galvanized or as per IBC 2304.10.5.
Mud sill plates in normally dry interior applications may be treated with Sodium Borate (DOT - Disodium Octaborate Tetrahydrate) as recent studies have noted less connector corrosion potential than other available wood treatments or the original CCA treated sill plates. Wood treated with Sodium Borate shall be protected during shipment, storage and installation to minimize leaching of the water-soluble preservative from the lumber. Sodium borate pressure treated plates do not require hot-dipped galvanized connectors.

If using preservative treatments other than CCA or sodium borate, fasteners must be hot dipped galvanized or stainless steel. Wood treated with Alkaline Copper Quaternary (ACQ) requires steel components in contact with the wood to be stainless (nails, bolts, screws, washers & lag screws). Fasteners (nails, bolts, screws, washers & lag screws) attaching timber connectors (joist hangers, post caps and bases, etc) to PT wood shall have similar corrosion resistance properties (matching protective treatments) as the protected connector; that is, use hot dipped galvanized or stainless-steel fasteners. Fasteners (nails, bolts, screws, washers & lag screws) attaching sawn timber members or sheathing (shear walls) to Pressure Treated wood shall be corrosion resistant (hot dipped galvanized or stainless steel).

Always verify the suitability of the fastener protection/coating with the wood treatment chemical manufacturer/supplier.

DCI ENGINEERS®
707 W 2nd Avenue
Spokane, Washington 99201
P: (509) 455-4448 www.dci-engineers.com
CIVIL / STRUCTURAL
© Copyright 02.2023 DiNardo Conversano Inc. All Rights Reserved
This drawing and specification, as an instrument of service, is the property of the Architect and may not be used in part, without written permission from DiNardo Conversano Inc.
Electronic media is for convenience only. Only the signed and sealed hard copy is the authorized use.

FOR PERMIT
The Contractor shall not use these drawings for construction until Contractor receives written approval for use in construction by the authority having jurisdiction and DCI Engineers.

MILLER STAUFFER ARCHITECTS
601 E. FRONT AVE., STE 201
COEUR D' ALENE, IDAHO 83814
P 208.664.1773 F 208.667.3174
WWW.MILLERSTAUFFER.COM

GENERAL NOTES

Permit Set

02-17-2023

Powell Sta. Maintenance

Highway 12
Powell Station, Idaho

PROFESSIONAL ENGINEER 13697 STATE OF IDAHO 02/17/23 JOSHUA B. COVINGTON

No.	Description	Date

PROJECT # 22041-0174
PRINCIPAL JBC
PROJECT MANAGER VAV

S1.3

2/17/2023 12:35:46 PM \\dci-li-share\Revit_Users\hancock_local\revit\STRUCT-22041-0174-R2023_Justin.Hancock.rvt

SPECIAL INSPECTIONS

The following Statement and Schedules of Inspections are those Special Inspections and Tests that shall be performed for this project. Special Inspectors shall reference these plans and IBC Chapter 17 for all special inspection requirements.
The owner shall retain an accredited Special Inspections agency to provide special inspections for this project. Special Inspectors shall be qualified persons per IBC 1704.2.1.
Special inspection reports shall be provided on a weekly basis. Submit copies of all inspection reports to the Architect/Engineer and the Authority Having Jurisdiction for review. In addition to special inspection reports and tests, submit reports and certificates noted in IBC 1704.5 to the Authority Having Jurisdiction. Final special inspection reports will be required by each special inspection firm per IBC 1704.2.4.

STATEMENT OF SPECIAL INSPECTIONS:
This statement of Special Inspections has been written with the understanding that the Building Official will:
- **Review and approve the qualifications of the Special Inspectors**
- **Monitor the special inspection activity on the project site to assure that Special Inspectors are qualified and performing their duty as state within this statement.**
- **Review all Special Inspection Reports submitted to them by the Special Inspector**
- **Perform inspections as required by IBC Section 110.3.**

The following Special Inspections are applicable to this project:

- **Special Inspections for Standard Buildings**	**(per IBC 1705.1)**	**REQUIRED**
- **Special Inspections for Seismic Resistance**	**(per IBC 1705.12)**	**NOT REQUIRED**
- **Testing for Seismic Resistance**	**(per IBC 1705.13)**	**NOT REQUIRED**
- **Special Inspections for Wind Resistance**	**(per IBC 1705.11)**	**REQUIRED**

SPECIAL INSPECTION OF SHOP FABRICATED GRAVITY LOAD-BEARING MEMBERS AND ASSEMBLIES:
Special Inspection of shop fabricated Gravity Load Bearing Members & Assemblies shall be verified by the Special Inspector as stated in Section 1704.2.5 which includes the following:

- **Prior to the start of fabrication:** Special Inspector(s), representing the Owner, shall visit the Fabricator's shop(s) where the work is to be performed, and verifies that the Fabricator maintains detailed Fabrication and Quality Control procedures that provide a basis for inspection, control of workmanship, material control, and fabricator's ability to conform to approved Construction Documents and referenced Standards.
- Fabricator shall have available for Inspector's review, detailed procedures for material control that demonstrates the fabricator's ability to maintain suitable records and procedures such that, at any time during the fabrication process, the material specification, grade and applicable test reports for primary load-carrying members, are capable of being determined.

STRUCTURAL STEEL per IBC 1705.2.1

A qualified Special Inspector of an "approved agency" providing Quality Assurance (QA) Special Inspections for the project shall review and confirm the Fabricator and Erector's Quality Control (QC) procedures for completeness and adequacy relative to AISC 360-16 Chapter N, AISC 303-16 Code of Standard Practice, AWS D1.1-2015 Structural Welding Code, and 2018 IBC code requirements for the fabricator's scope of work.

- QA Agency providing Special Inspections shall provide personnel meeting the minimum qualification requirements for Inspection and Nondestructive Testing NDT per AISC 360 Section N4.
- Verify Fabricator and Erector QC Program per AISC 360 Section N2.
- Inspection of welds and bolts by both QC and QA personnel shall be per the Schedule of Special Inspections below. All provisions of AWS D1.1 Structural Welding Code for statically loaded structures shall apply.
- Nondestructive Testing (NDT) of welds:
  - Non-Destructive Testing (NDT) of welded joints per AISC 360 N5.5.
  - Risk Category for determination of extent of NDT per AISC 360 N5.5b is noted in the Design Criteria and Loads section of these General Requirements.
  - NDT performed shall be documented and reports shall identify the tested weld by piece mark and location of the piece.
  - For field work, the NDT report shall identify the tested weld by location in the structure, piece mark and location of the piece.
- Additional Inspection tasks per AISC 360 Section N5.8.
- Inspection for Composite Construction shall be done per AISC 360 Section N6.

POST-INSTALLED ANCHORS TO CONCRETE AND MASONRY: shall comply with IBC Section 1703. Inspections shall be in accordance with the requirements set forth in the approved ICC Evaluation Report and as indicated by the design requirements specified on the drawings. Refer to the POST INSTALLED ANCHORS section of these notes for anchors that are the basis of the design. Special inspector shall verify anchors are as specified in the POST INSTALLED ANCHORS section of these notes or as otherwise specified on the drawings. Substitutions require approval by the SER and require substantiating calculations and current 2018 IBC recognized ICC Evaluation Services (ES) Report. Special Inspector shall document in their Special Inspection Report compliance with each of the elements required within the applicable ICC Evaluation Services (ES) Report.

PREFABRICATED CONSTRUCTION: All prefabricated construction shall conform to IBC Section 1703.

SCHEDULES OF SPECIAL INSPECTIONS:

TABLE 1705.6
REQUIRED SPECIAL INSPECTIONS AND TESTS OF SOILS

TYPE	CONTINUOUS SPECIAL INSPECTION	PERIODIC SPECIAL INSPECTION
1. Verify materials below shallow foundations are adequate to achieve the design bearing capacity	-	X
2. Verify excavations are extended to proper depth and have reach proper material	-	X
3. Perform classification and testing of compacted fill materials	-	X
4. Verify use of proper materials, densities and list thickness during placement and compaction of compacted fill	X	-
5. Prior to placement of compacted fill, inspect subgrade and verify that site has been prepared properly	-	X

TABLE 1705.3
REQUIRED SPECIAL INSPECTIONS AND TESTS OF CONCRETE CONSTRUCTION

TYPE	CONTINUOUS SPECIAL INSPECTION	PERIODIC SPECIAL INSPECTION	REFERENCED STANDARD	IBC REFERENCE
1. Inspection, reinforcement, and verify placement.	-	X	ACI 318 Ch. 20, 25.2, 25.3, 26.6.1-26.6.3	1908.4
2. Inspect anchors cast in concrete	-	X	ACI 318: 17.8.2	-
3. Verify use of required design mix	-	X	ACI 318: Ch. 19, 26.4.3, 26.4.4	1904.1, 1904.2, 1908.2, 1908.3
4. Prior to concrete placement, fabricate specimens, for strength tests, perform slump and air content tests, and determine the temperature of the concrete	X	-	ASTM C172 ASTM C31 ACI 318: 26.5, 26.12	1908.10
5. Inspect concrete and shotcrete placement for proper application techniques	X	-	ACI 318: 26.5	1908.6, 1908.7, 1908.8
6. Verify maintenance of specified curing temperature and techniques	-	X	ACI 318 :26.5.3 – 26.5.5	1908.9
7. Inspect formwork for shape, location and dimensions of the concrete member being formed	-	X	ACI 318: 26.11.1.2 (b)	-

REQUIRED SPECIAL INSPECTIONS OF WOOD CONSTRUCTION

TYPE	CONTINUOUS SPECIAL INSPECTION	PERIODIC SPECIAL INSPECTION	REFERENCED STANDARD
1. Moisture Content of wood studs, plates, beams, decking, and joists	-		As directed by the Contractor to meet moisture content requirements
2. Inspections as required by SIP manufacturer	-	X	

MINIMUM REQUIREMENTS FOR INSPECTIONS OF STRUCTURAL STEEL CONSTRUCTION

INSPECTION TASKS	QC	QA	REFERENCED STANDARD
INSPECTION TASKS PRIOR TO WELDING			
1. Welder qualification records and continuity records	P	O	AISC 360 TABLE N5.4-1
2. Welding procedure specifications (WPSs) available	P	P	AISC 360 TABLE N5.4-1
3. Manufacturing certifications for welding consumables available	P	P	AISC 360 TABLE N5.4-1
4. Material identification (type/grade)	O	O	AISC 360 TABLE N5.4-1
5. Welder Identification system	O	O	AISC 360 TABLE N5.4-1
6. Fit-up of groove welds (including joint geometry) • Joint preparation • Dimensions (alignment, root opening, root face, bevel) • Cleanliness (condition of steel surfaces) • Tacking (tack welding quality and location) • Backing type and fit (if applicable)	O	O	AISC 360 TABLE N5.4-1
7. Fit-up of CJP groove welds of HSS T-, Y-, and K-joints without backing (including joint geometry) • Joint preparation • Dimensions (alignment, root opening, root face, bevel) • Cleanliness (condition of steel surfaces) • Tacking (tack welding quality and location)	P	O	AISC 360 TABLE N5.4-1
8. Configuration and finish of access holes	O	O	AISC 360 TABLE N5.4-1
9. Fit-up of fillet welds • Dimensions (alignment, gaps at root) • Cleanliness (condition of steel surfaces) • Tacking (tack weld quality and location)	O	O	AISC 360 TABLE N5.4-1
10. Check welding equipment	O	-	AISC 360 TABLE N5.4-1
INSPECTION TASKS DURING WELDING			
1. Use of qualified welders	O	O	AISC 360 TABLE N5.4-2
2. Control and handling of welding consumables • Packaging • Exposure control	O	O	AISC 360 TABLE N5.4-2
3. No welding over cracked tack welds	O	O	AISC 360 TABLE N5.4-2
4. Environmental conditions • Wind speed within limits • Precipitation and temperature	O	O	AISC 360 TABLE N5.4-2
5. WPS followed • Settings on welding equipment • Travel speed • Selected welding materials • Shielding gas type/flowrate • Preheat applied • Interpass temperature maintained (min/max) • Proper position (F, V, H, OH)	O	O	AISC 360 TABLE N5.4-2
6. Welding techniques • Interpass and final cleaning • Each pass within profile limitations • Each pass meets quality requirements	O	O	AISC 360 TABLE N5.4-2
INSPECTION TASKS AFTER WELDING			
1. Welds cleaned	O	O	AISC 360 TABLE N5.4-3
2. Size, length, and locations of welds	P	P	AISC 360 TABLE N5.4-3
3. Welds meet visual acceptance criteria • Crack prohibition • Weld/base-metal fusion • Crater cross section • Weld profiles • Weld size • Undercut • Porosity	P	P	AISC 360 TABLE N5.4-3
4. Arc strikes	P	P	AISC 360 TABLE N5.4-3
5. k-area	P	P	AISC 360 TABLE N5.4-3
6. Weld access holes in rolled heavy shapes and built-up heavy shapes	P	P	AISC 360 TABLE N5.4-3
7. Backing removed and weld tabs removed (if required)	P	P	AISC 360 TABLE N5.4-3
8. Repair activities	P	P	AISC 360 TABLE N5.4-3
9. Document acceptance or rejection of welded joint or member	P	P	AISC 360 TABLE N5.4-3
10. No prohibited welds have been added without the approval of the EOR	P	P	AISC 360 TABLE N5.4-3

INSPECTION TASKS PRIOR TO BOLTING			
1. Manufacturer's certifications available for fastener materials	O	P	AISC 360 TABLE N5.6-1
2. Fasteners marked in accordance with ASTM requirements	O	O	AISC 360 TABLE N5.6-1
3. Correct fasteners selected for the joint detail (grade, type, bolt length if threads are to be excluded from shear plane)	O	O	AISC 360 TABLE N5.6-1
4. Correct bolting procedure selected for joint detail	O	O	AISC 360 TABLE N5.6-1
5. Connecting elements, including the appropriate faying surface condition and hole preparation, if specified, meet applicable requirements	O	O	AISC 360 TABLE N5.6-1
6. Pre-installation verification testing by installation personnel observed and documented for fastener assemblies and methods used.	P	O	AISC 360 TABLE N5.6-1
7. Proper storage provided for bolts, nuts, washers and other fasteners components	O	O	AISC 360 TABLE N5.6-1
INSPECTION TASKS DURING BOLTING			
1. Fastener assemblies, of suitable condition, placed in all holes and washers are positioned as required	O	O	AISC 360 TABLE N5.6-2
2. Joint brought to the snug-tight condition prior to the pre-tensioning operation	O	O	AISC 360 TABLE N5.6-2
3. Fastener component not turned by the wrench prevented from rotating	O	O	AISC 360 TABLE N5.6-2
4. Fasteners are pre-tensioned in accordance with the RCSC Specification, progressing systematically from the most rigid point toward the free edges	O	O	AISC 360-10 TABLE N5.6-2
INSPECTION TASKS AFTER BOLTING			
1. Document acceptance or rejection of bolted connections	P	P	AISC 360 TABLE N5.6-3

O - Observe these items on a random basis. Operations need not be delayed pending these inspections
P - Perform these tasks for each welded joint or member, each bolted connection, or each steel element

DCI ENGINEERS®
707 W 2nd Avenue
Spokane, Washington 99201
P: (509) 455-4448 www.dci-engineers.com
CIVIL / STRUCTURAL

© Copyright 02.2023 D'Amato Conversano Inc. All Rights Reserved
This document is instruments of service and shall remain the property of D'Amato Conversano Inc. Reproduction or publication of this document, or any portion thereof, without written permission from D'Amato Conversano Inc. is prohibited. Any use of this document on other projects is prohibited without written permission from D'Amato Conversano Inc.

FOR PERMIT
The Contractor shall not use these drawings for construction until Contractor receives written approval for use in construction by the authority having jurisdiction and DCI Engineers.

MILLER STAUFFER ARCHITECTS
601 E. FRONT AVE., STE 201
COEUR D' ALENE, IDAHO 83814
P: 208.664.1773 F: 208.667.3174
WWW.MILLERSTAUFFER.COM

SPECIAL INSPECTIONAL INSPECTIONS

Permit Set
02-17-2023

Powell Sta. Maintenance
Highway 12
Powell Station, Idaho

PROFESSIONAL ENGINEER LICENSED 36977 STATE OF IDAHO JUSTIN B. HANCOCK

No.	Description	Date

PROJECT #	22041-0174
PRINCIPAL	JBC
PROJECT MANAGER	VAV

S1.4

2/17/2023 12:35:58 PM \\dci-fl-share\Revit_Users\jhancock_local\rvt\STRUCT-22041-0174-R2023_Justin.Hancock.rvt

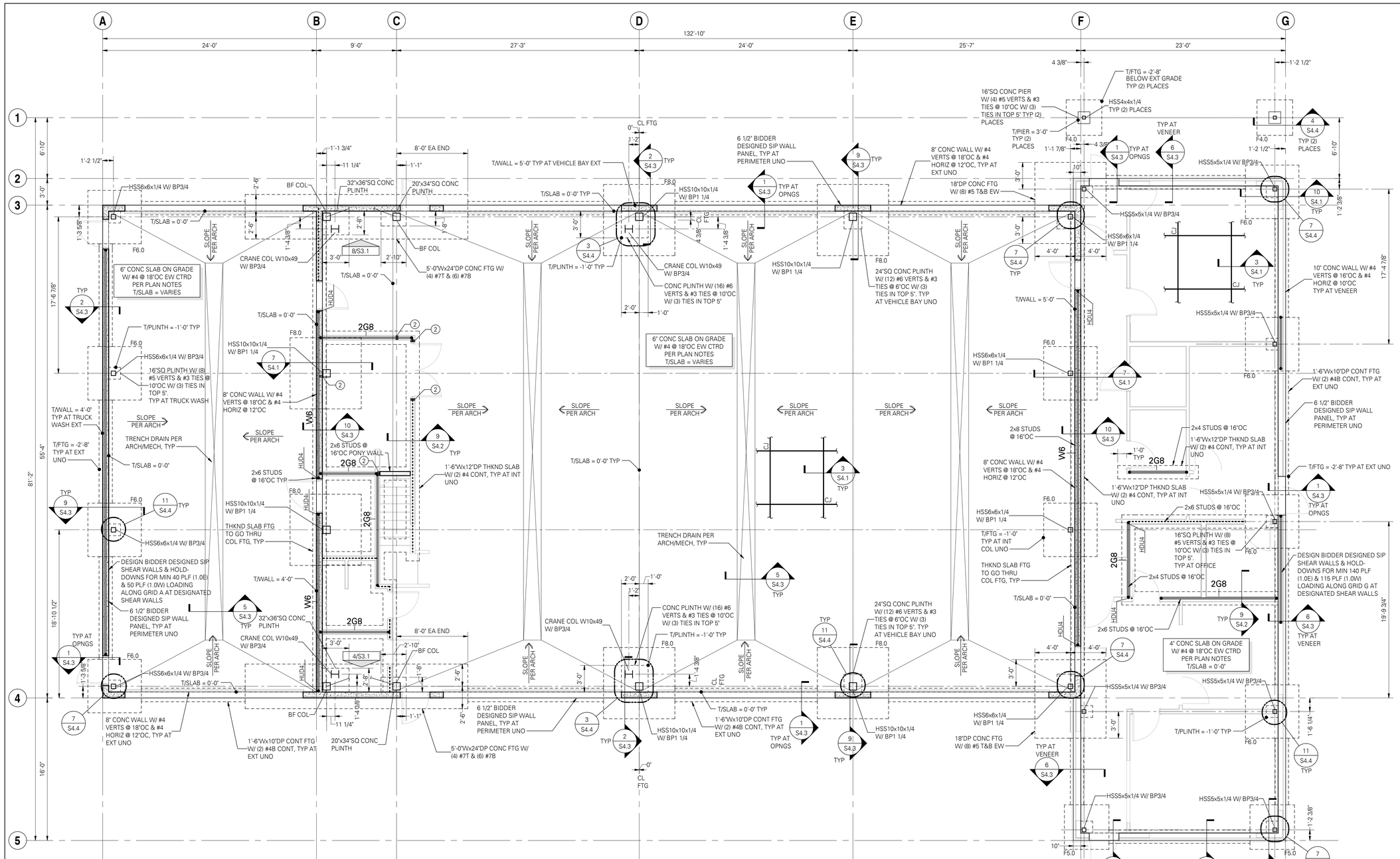

FOUNDATION PLAN NOTES:

FOUNDATION NOTES:

1. STRUCTURAL GENERAL NOTES, DESIGN CRITERIA, ABBREVIATIONS AND LEGEND PER S1.1 THROUGH S1.4.
2. VERIFY ALL DIMENSIONS AND ELEVATIONS WITH THE ARCHITECTURAL DRAWINGS.
3. CONTRACTOR SHALL LOCATE AND VERIFY THE FOLLOWING WITH OTHERS PRIOR TO POURING CONCRETE: ALL DOOR OPENINGS IN FOUNDATION WALLS; DRAINS AND SLOPES; BLOCKOUTS FOR PLUMBING, SPRINKLERS AND HVAC. ALL DUCTS, CHASES AND PIPES PER MECHANICAL, PLUMBING, ELECTRICAL AND SPRINKLER DRAWINGS. STAIR DETAILS AND GUARDRAILS PER ARCHITECTURAL DRAWINGS.
4. TOP OF SLAB (T/SLAB) ELEVATION ASSUMED 0'-0". FOR ACTUAL T/SLAB ELEVATION REFER TO CIVIL AND ARCHITECTURAL DRAWINGS. PROVIDE 15 MIL VAPOR BARRIER BELOW SLAB AT INTERIOR SPACES. PROVIDE FREE-DRAINING GRANULAR FILL PER GEOTECH REPORT.
5. TYPICAL TOP OF INTERIOR (T/INTERIOR) FOOTING ELEVATION = -1'-0", UNO. TYPICAL TOP OF EXTERIOR T/EXTERIOR) FOOTING ELEVATIONS = -2'-8", UNO.
6. ALL FOOTINGS AND SLABS TO BEAR ON STRUCTURAL FILL. SUBGRADE PREPARATION, STRUCTURAL FILL, FOOTING DRAINS, AND OTHER REQUIREMENTS PER GEOTECH REPORT AS NOTED IN THE STRUCTURAL GENERAL NOTES.
7. CJ INDICATES CONTROL JOINT PER PLAN.
8. ALL WOOD EXPOSED TO CONCRETE, WEATHER, OR WITHIN 8" OF FINISHED GRADE SHALL BE PRESSURE-TREATED.
9. MOISTURE PROOF ALL CONCRETE STEMWALLS PER ARCHITECT.
10. TYPICAL DETAILS PER:
    - 1/S4.1 PIPE OR CONDUIT EMBEDDED IN SLAB ON GRADE
    - 2/S4.1 PLAN - TYPICAL CORNER REINFORCING AT CONCRETE FOOTINGS
    - 3/S4.1 TYPICAL SLAB ON GRADE JOINT DETAILS WITH REINFORCING
    - 4/S4.1 STANDARD HOOKS AND BENDS
    - 5/S4.1 TYPICAL DEPRESSED SLAB DETAIL
    - 6/S4.1 PLAN - TYPICAL CORNER REINFORCING AT CONCRETE WALLS
    - 8/S4.1 LAP SPLICE AND DEVELOPMENT LENGTH SCHEDULE
    - 9/S4.1 CONCRETE PAD ON SLAB ON GRADE
    - 11/S4.1 TYPICAL PIPE AND TRENCH LOCATIONS AT CONCRETE STEMWALL/FOOTING
    - 1/S4.2 TYPICAL ANCHOR BOLT SCHEDULE
    - 3/S4.2 PLAN - TYPICAL CONTROL JOINT AT HSS
    - 7/S4.2 PLAN - TYPICAL CONTROL JOINT AT EXTERIOR STEEL COLUMN
    - 8/S4.2 TYPICAL BASEPALTE TO FOUNDATION CONNECTION - HSS COLUMN

STUD AND SHEAR WALL NOTES:

1. LUMBER GRADE PER STRUCTURAL GENERAL NOTES.
2. ALL INTERIOR NON-BEARING, NON-STRUCTURAL WALL STUD REQUIREMENTS PER STRUCTURAL GENERAL NOTES.
3. HEADERS SHOWN ON FRAMING PLAN SHALL BE SUPPORTED BY (1) TRIMMER AND (1) KING STUD MINIMUM, UNO. WHERE MORE THAN (1) TRIMMER IS REQUIRED, THE NUMBER OF TRIMMER STUDS SHALL BE NOTED THUS: ■ (2). TRIMMERS TO BE CONTINUOUS TO THE FOUNDATION. BLOCK SOLID AT FLOOR FRAMING.
4. BEAMS SHOWN ON FRAMING PLAN SHALL BE SUPPORTED BY (2) BUNDLED STUDS MINIMUM, UNO. WHERE MORE THAN (2) BUNDLED STUDS ARE REQUIRED, THE NUMBER OF BUNDLED STUDS SHALL BE NOTED THUS: ■ (3). BUNDLED STUDS TO BE CONTINUOUS TO THE FOUNDATION. BLOCK SOLID AT FLOOR FRAMING.
5. SHEAR WALL AND NAILING REQUIREMENTS PER SHEAR WALL SCHEDULE.
6. AT STAGGERED STUD WALLS, BUNDLED STUDS, TRIMMER STUDS, KING STUDS, AND SHEAR WALL COMPRESSION STUDS ARE TO MATCH THE WIDTH OF THE WALL PLATES.
7. HD (2) 2x (1) INDICATES HOLD-DOWN TYPE PER HOLD-DOWN SCHEDULE 11/S4.3.
8. TYPICAL HOLD-DOWN ELEVATION PER 11/S4.2 & 12/S4.2.
9. ANCHOR BOLTS TO BE 5/8" DIA x 7" MINIMUM EMBEDMENT PER 2/S4.2. PROVIDE HOT-DIPPED GALVANIZED ANCHOR BOLTS AT PRESSURE-TREATED SILL PLATES.
10. TYPICAL DETAILS PER:
    - 5/S4.2 TYIPCAL SHEAR WALL INTERSECTION
    - 6/S4.2 PLAN - TYPICAL SILL PLATE ANCHORAGE TO CONCRETE
    - 10/S4.2 PLAN - INTERSECTING SHEAR WALLS
    - 11/S4.2 TYPICAL HOLD-DOWN AT THICKENED SLAB FOOTING
    - 12/S4.2 TYPICAL HOLD-DOWN AT FOUNDATION - CONCRETE STEMWALL
    - 7/S4.3 SHEAR WALL SCHEDULE - DOUG-FIR LARCH
    - 11/S4.3 HOLD-DOWN/STRAP SCHEDULE - DOUG-FIR STUDS
    - 2/S5.2 TYPICAL INTERIOR 2x WALL TO SIP PANEL
    - 7/S5.2 NON-STRUCTURAL PARTITION WALL CONNECTION
    - 8/S5.2 TYPICAL BUILT-UP 2x HEADER OR BEAM
    - 9/S5.2 SIP WALL PANEL AT SIP WALL PANEL
    - 11/S5.2 TYPICAL PLATE SPLICE DETAIL
    - 12/S5.2 TYPICAL HEADER
    - 11/S5.4 NON-STRUCTURAL PARTITION WALL CONNECTION

SPREAD FOOTING SCHEDULE

MARK	SIZE LENGTH	SIZE WIDTH	SIZE DEPTH	REINFORCING	COMMENTS
F4.0	4'-0"	4'-0"	1'-0"	(4) #5B EW	---
F5.0	5'-0"	5'-0"	1'-0"	(5) #5B EW	---
F6.0	6'-0"	6'-0"	1'-2"	(6) #5B EW	---
F8.0	8'-0"	8'-0"	1'-6"	(6) #7B EW	---

BEARING/SHEAR WALL LINE KEY

SHEAR WALL LINE

INDICATES SIDE WHERE SHEATHING IS LOCATED AND NAILING PATTERN PER SHEAR WALL SCHEDULE

INDICATES STUD WALL LOCATION PER ARCH

HOLD-DOWN TYPE PER HOLD-DOWN SCHEDULE

S/HDU2 6x6 — 2W4 — S/HDU2 6x6

SIZE OF STUD PER TYPICAL STUD BEARING WALL SCHEDULE UNLESS NOTED OTHERWISE HERE

INDICATES SHEAR WALL LINE

BEARING WALL LINE

INDICATES BEARING WALL LINE STUD SIZE AND SPACING PER TYPICAL STUD BEARING WALL SCHEDULE

INDICATES STUD WALL LOCATION PER ARCH

FOUNDATION PLAN

SCALE: 3/16"=1'-0"

N

DCI ENGINEERS®
707 W 2nd Avenue
Spokane, Washington 99201
P: (509) 455-4448
www.dci-engineers.com
CIVIL / STRUCTURAL

© Copyright 02.2023 DCI Engineers Inc. All Rights Reserved
This document is the property of DCI Engineers Inc. and may not be reproduced or used in part, without written permission from DCI Engineers Inc.

FOR PERMIT

The Contractor shall not use these drawings for construction until Contractor receives written approval for use in construction by the authority having jurisdiction and DCI Engineers.

MILLER STAUFFER ARCHITECTS
601 E. FRONT AVE., STE 201
COEUR D' ALENE, IDAHO 83814
P 208.664.1773 F 208.667.3174
WWW.MILLERSTAUFFER.COM

FOUNDATION PLAN

Permit Set

02-17-2023

Powell Sta. Maintenance

Highway 12
Powell Station, Idaho

PROFESSIONAL ENGINEER LICENSED JUSTIN A. HANCOCK 13697 STATE OF IDAHO

No.	Description	Date

PROJECT #	22041-0174
PRINCIPAL	JBC
PROJECT MANAGER	VAV

S2.1

2/17/2023 12:36:11 PM \\dci-fl-share\Revit_Users\jhancock_local\revit\STRUCT-22041-0174-R2023_Justin.hancock.rvt

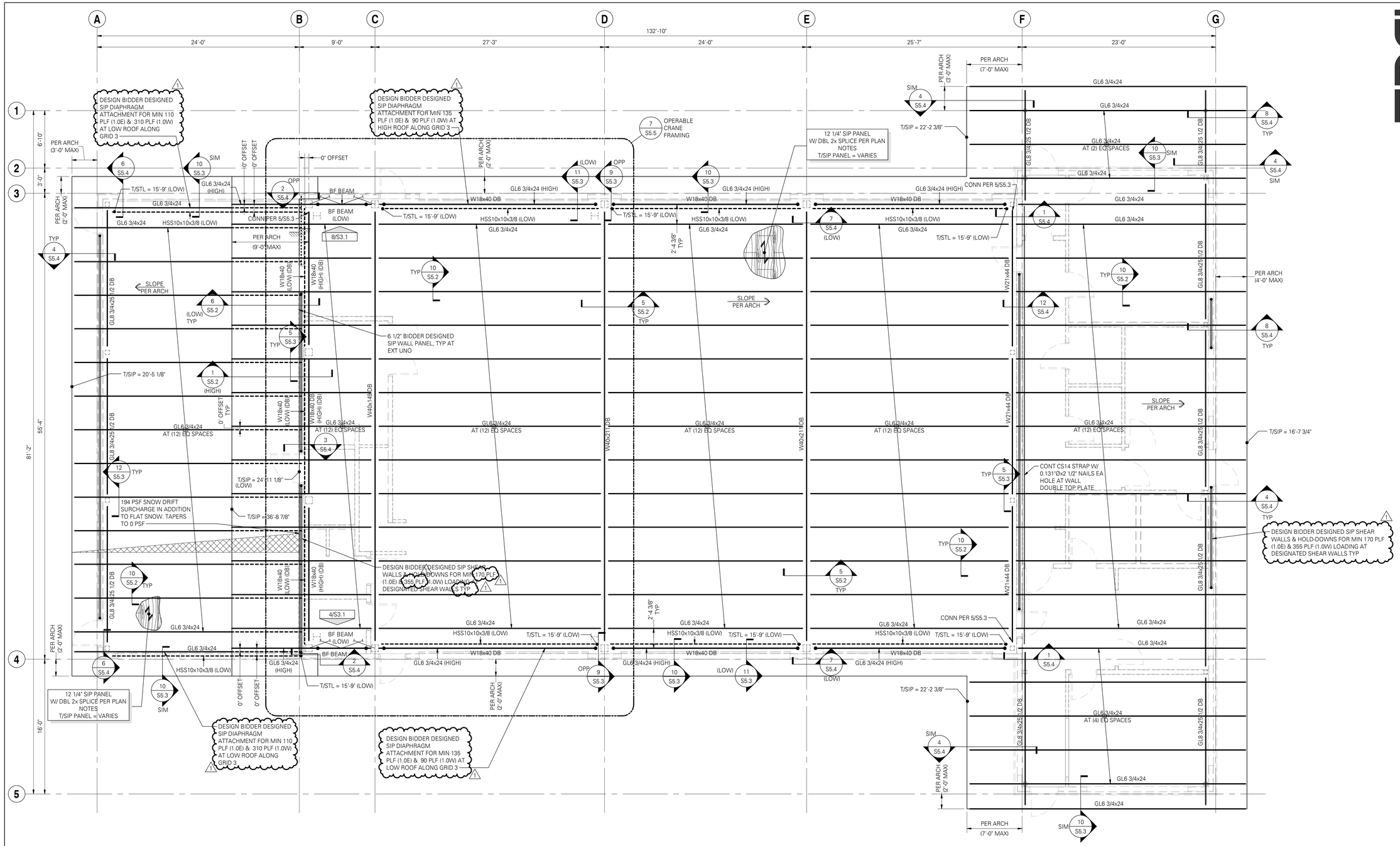

ROOF FRAMING PLAN NOTES:

1. STRUCTURAL GENERAL NOTES, DESIGN CRITERIA, ABBREVIATIONS AND LEGEND PER S1.1 THROUGH S1.4.
2. VERIFY ALL DIMENSIONS AND ELEVATIONS WITH THE ARCHITECTURAL DRAWINGS.
3. ALL DUCTS, CHASES AND PIPES SHALL BE PER MECHANICAL, PLUMBING, ELECTRICAL AND SPRINKLER DRAWINGS. STAIR DETAILS AND GUARDRAILS PER ARCHITECTURAL DRAWINGS.
4. GLULAM, PARALLAM AND MICROLLAM HANGERS ARE AS SPECIFIED ON PLAN.
5. HEADERS SHOWN BUT NOT SPECIFIED ARE TO BE (2) 2x8 MINIMUM. HEADER SUPPORTS PER STUD AND SHEAR WALL PLAN ON FLOOR BELOW.
6. HEADERS AND HEADER SUPPORTS PER SIP MANUFACTURER.
7. ROOF SIPS SHALL BE DESIGNED FOR THE FOLLOWING CRITERIA:
   - ROOF SYSTEM TO BE BIDDER DESIGNED. ROOF PLAN SHOWN IS A SUGGESTED LAYOUT. CHANGES MUST BE SUBMITTED TO THE ENGINEER-OF-RECORD THRU THE ARCHITECT WITH BEARING POINTS AND REACTIONS TO STRUCTURE.
   - SIP LAYOUT SHOWN IS APPROXIMATE. SIP SUPPLIER IS RESPONSIBLE FOR FINAL SIP LAYOUT AND CONFIGURATION. NOTIFY ENGINEER OF REVISIONS TO PLAN.
   - STANDARD DEAD AND LIVE LOADS AND SUBMITTAL INFORMATION PER STRUCTURAL GENERAL NOTES.
   - SIP SHALL BE DESIGNED FOR ADDITIONAL LOADS FROM MECHANICAL UNITS AND PIPING. CONTRACTOR TO PROVIDE THE SIP SUPPLIER WITH LOCATIONS AND SUPPORT CONDITIONS OF ALL MECHANICAL, ELECTRICAL, PLUMBING, AND SPRINKLER LOADS.
8. BEARING STUD, SHEAR WALL, HOLD-DOWN, POST SIZE, AND POST CAP AND BASE REQUIREMENTS BELOW PER FOUNDATION PLAN.

FLOOR FRAMING PLAN NOTES:

1. STRUCTURAL GENERAL NOTES, DESIGN CRITERIA, ABBREVIATIONS AND LEGEND PER S1.1 THROUGH S1.4.
2. VERIFY ALL DIMENSIONS AND ELEVATIONS WITH THE ARCHITECTURAL DRAWINGS.
3. FLOOR SHEATHING PER PLAN AND STRUCTURAL GENERAL NOTES. SHEATHING TO BE GLUED AND NAILED TO FRAMING WITH 0.131" DIAx2 1/2" NAILS @ 6"OC AT SUPPORTED PANEL EDGES AND @ 12"OC FIELD, UNO. LAY SHEATHING WITH FACE GRAIN (LONG DIRECTION) PERPENDICULAR TO SUPPORTS AND STAGGER PANEL END JOINTS. ALLOW 1/8" SPACE BETWEEN PANEL ENDS AND EDGES.
4. ALL DUCTS, CHASES AND PIPES SHALL BE PER MECHANICAL, PLUMBING, ELECTRICAL AND SPRINKLER DRAWINGS. STAIR DETAILS AND GUARDRAILS PER ARCHITECTURAL DRAWINGS.
5. ALL WOOD EXPOSED TO CONCRETE, WEATHER, OR WITHIN 8" OF FINISHED GRADE SHALL BE PRESSURE-TREATED.
6. GLULAM, PARALLAM AND MICROLLAM HANGERS ARE AS SPECIFIED ON PLAN. "I" JOIST HANGERS TO BE TOP FLANGE BEARING SIMPSON MIT OR ITS TYPE, UNO.
7. HEADERS SHOWN BUT NOT SPECIFIED ARE TO BE (2) 2x8 MINIMUM. HEADER SUPPORTS PER FOUNDATION PLAN.
8. BEAMS ARE FLUSH FRAMED WITH JOISTS UNLESS NOTED OTHERWISE ON DETAILS, OR ON PLANS AS "DB" INDICATING THAT DROPPED BEAM FRAMING IS REQUIRED. BEAM SUPPORTS PER FOUNDATION PLAN ON FLOOR BELOW. PROVIDE A35 CLIP EACH SIDE OF FLUSH BEAMS THAT BEAR ON DOUBLE TOP PLATES.
9. WOOD "I" JOISTS TO BE DESIGNED BY OTHERS. SUBMITTAL INFORMATION, DESIGN CRITERIA, RIM JOIST AND BLOCKING REQUIREMENTS PER STRUCTURAL GENERAL NOTES.
10. PROVIDE FULL HEIGHT SOLID BLOCKING OR DOUBLE JOISTS UNDER ALL SHEAR WALLS AND BEARING WALLS. AT SHEAR WALLS PARALLEL TO FRAMING, ALIGN (1) JOIST OVER SHEAR WALL (ADDITIONAL JOISTS MAY BE REQUIRED).
11. ALL RIM JOISTS AND BLOCKING TO BE 1 1/2" LSL MINIMUM UNO.
12. PROVIDE DOUBLE JOISTS AROUND ALL FLOOR AND ROOF OPENINGS GREATER THAN 24" ON ONE SIDE.
13. BEARING STUD, SHEAR WALL, HOLD-DOWN, POST SIZE, AND POST CAP AND BASE REQUIREMENTS BELOW PER STUD AND SHEAR WALL PLAN ON FLOOR BELOW.

ROOF FRAMING PLAN

SCALE: 3/16"=1'-0"

DCI ENGINEERS®
707 W 2nd Avenue
Spokane, Washington 99201
P: (509) 455-4448
www.dci-engineers.com
CIVIL / STRUCTURAL

© Copyright 03.2023 DiNisio Consultants Inc. All Rights Reserved
These drawings and specifications are the property and copyright of DiNisio Consultants Inc. Unauthorized use is a violation of federal copyright laws and may be subject to criminal prosecution.
Do not scale drawings. Use only dimensions shown. Report any errors or omissions to the Engineer immediately. Do not proceed with work until errors or omissions are resolved.
Do not use these drawings for any purpose other than those specified herein.
Do not copy, reproduce, publish or distribute these drawings in part, without written permission from DiNisio Consultants Inc.

FOR PERMIT
The Contractor shall not use these drawings for construction until Contractor receives written approval for use in construction by the authority having jurisdiction and DCI Engineers.

MILLER STAUFFER ARCHITECTS
601 E. FRONT AVE., STE 201
COEUR D' ALENE, IDAHO 83814
P 208.664.1773 F 208.667.3174
WWW.MILLERSTAUFFER.COM

ROOF FRAMING PLAN
Permit Set
02-17-2023

Powell Sta. Maintenance
Highway 12
Powell Station, Idaho

PROFESSIONAL ENGINEER
JUSTIN B. COOK
STATE OF IDAHO
13697

No.	Description	Date
1	DBS PERMIT REVISION	03/17/23

PROJECT #	22041-0174
PRINCIPAL	JBC
PROJECT MANAGER	VAV

S2.2

C:_localnvi\STRUCT-22041-0174-R2023_kevansFU47P.rvt
3/15/2023 3:33:18 PM

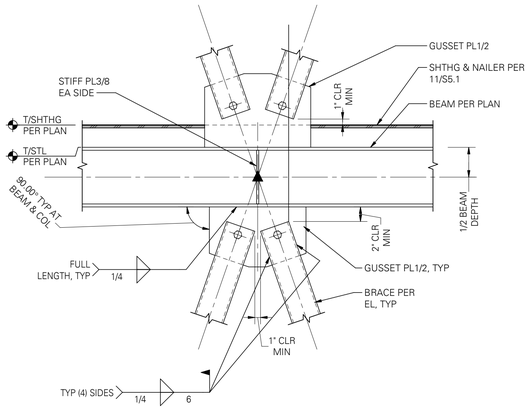

1 BRACED FRAME DETAIL - STEEL

SCALE: 1" = 1'-0"

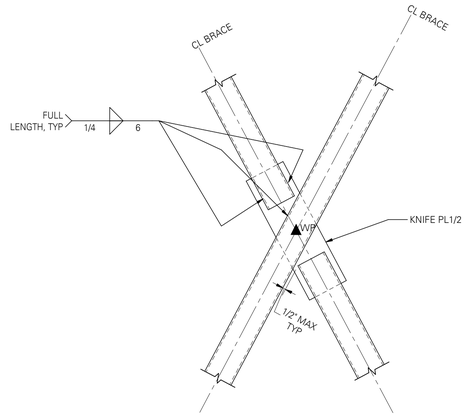

2 TYPICAL BRACE INTERSECTION

SCALE: 1" = 1'-0"

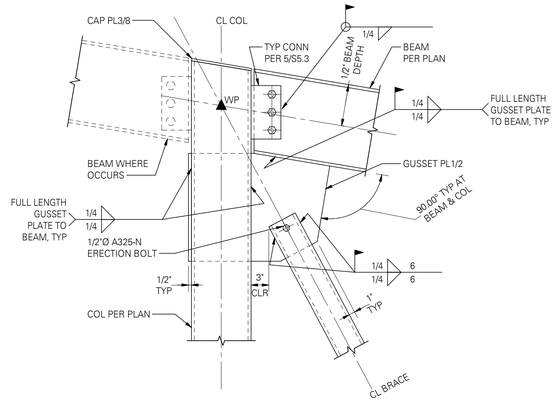

3 BRACED FRAME DETAIL

SCALE: 1" = 1'-0"

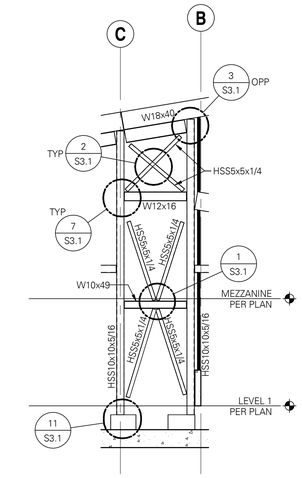

4 SOUTH BRACED FRAME

SCALE: 1/8" = 1'-0"

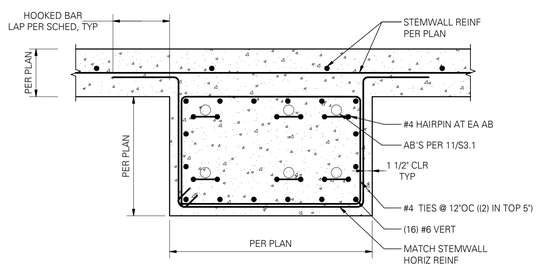

PLAN - PLINTH AT PARALLEL TO STEMWALLS

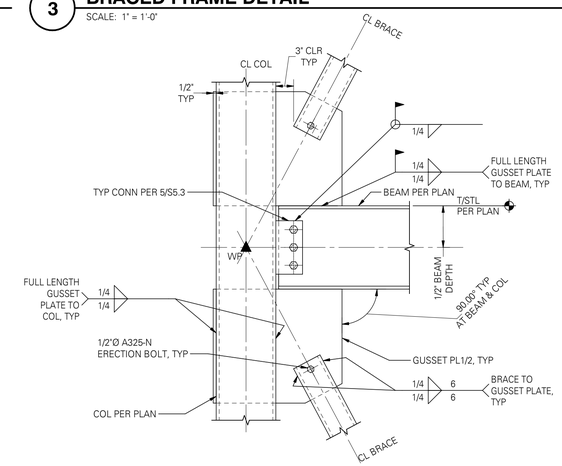

7 BRACED FRAME DETAIL

SCALE: 1" = 1'-0"

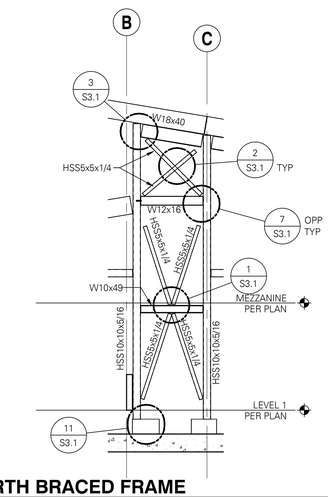

8 NORTH BRACED FRAME

SCALE: 1/8" = 1'-0"

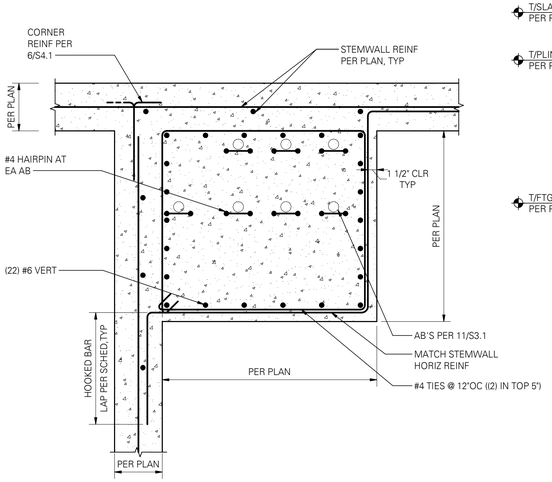

PLAN - PLINTH AT CORNER OF STEMWALLS

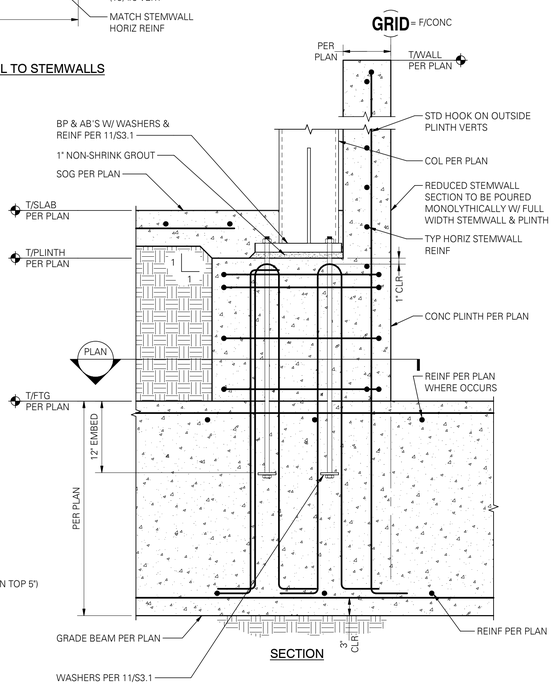

SECTION

9 BRACED FRAME AT CONCRETE PLINTH

SCALE: 1" = 1'-0"

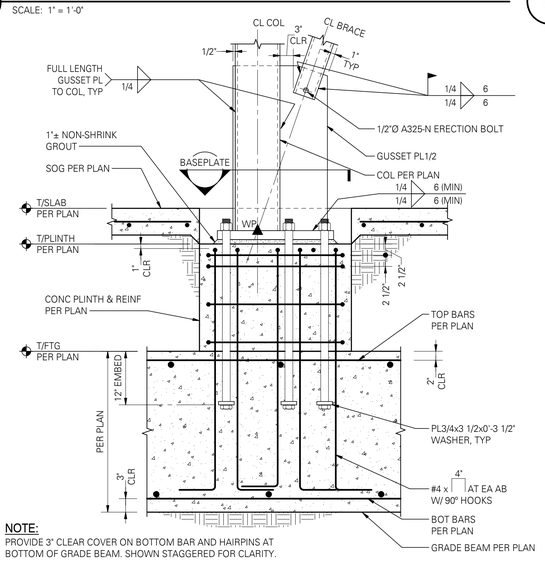

NOTE:
PROVIDE 3" CLEAR COVER ON BOTTOM BAR AND HAIRPINS AT BOTTOM OF GRADE BEAM. SHOWN STAGGERED FOR CLARITY.

11 BRACED FRAME CONNECTION AT CONCRETE PLINTH

SCALE: 3/4" = 1'-0"

(7) 1 3/4"Ø FI554 GR 55 AB HEADED OR W/ NUT PER 1/S4.2, PROVIDE PL1/2x3x0'-3" WELD WASHERS AT OVERSIZED HOLES IN BP WELD TO BP W/ 1/4" FULL LENGTH FILLET ON ALL SIDES, TYP UNO

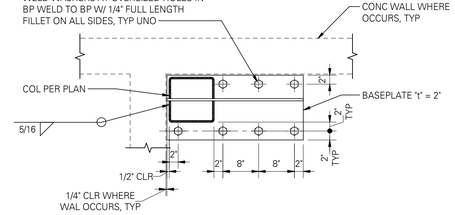

BASEPLATE - CORNER COLUMN

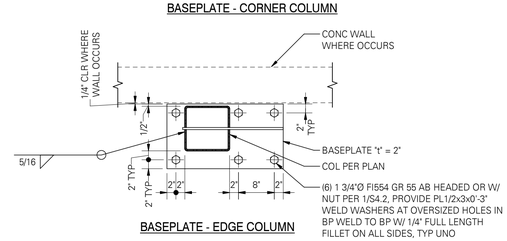

BASEPLATE - EDGE COLUMN

DCI ENGINEERS®
707 W 2nd Avenue
Spokane, Washington 99201
P: (509) 455-4448 www.dci-engineers.com
CIVIL / STRUCTURAL

© Copyright 02.2023 DiNardo Consultants Inc. All Rights Reserved
These drawings and specifications are the property of DiNardo Consultants Inc. Reproduction or publication in whole or in part, without written permission from DiNardo Consultants Inc. is prohibited. Unauthorized use of these drawings and specifications is prohibited.

FOR PERMIT
The Contractor shall not use these drawings for construction until Contractor receives written approval for use in construction by the authority having jurisdiction and DCI Engineers.

MILLER STAUFFER ARCHITECTS

601 E. FRONT AVE., STE 201
COEUR D' ALENE, IDAHO 83814
P 208.664.1773 F 208.667.3174
WWW.MILLERSTAUFFER.COM

BRACED FRAMING ELEVATIONS
Permit Set
02-17-2023

Powell Sta. Maintenance
Highway 12
Powell Station, Idaho

PROFESSIONAL ENGINEER
LICENSED
13697
STATE OF IDAHO
JUSTIN B. CO

No.	Description	Date

PROJECT # 22041-0174
PRINCIPAL JBC
PROJECT MANAGER VAV

S3.1

2/17/2023 12:36:33 PM \\dci-ll-share\Revit_Users\jhancock_local\revit\STRUCT-22041-0174-R2023_Justin.Hancock.rvt

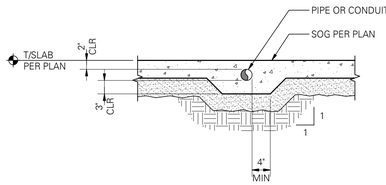

NOTE:
ALUMINUM MATERIALS SHALL NOT BE EMBEDDED IN CONCRETE.

1 PIPE OR CONDUIT EMBEDDED IN SLAB ON GRADE

SCALE: 3/4" = 1'-0" (03204)

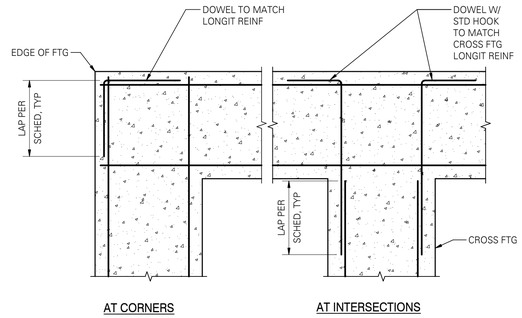

NOTE:
1. SPLICE LENGTHS PER LAP SPLICE AND DEVELOPMENT LENGTH SCHEDULE.
2. FOOTING REINFORCING PER PLAN OR ELEVATIONS, SECTIONS AND DETAILS.

2 PLAN - TYPICAL CORNER REINFORCING AT CONCRETE FOOTINGS

SCALE: 3/4" = 1'-0" (03132)

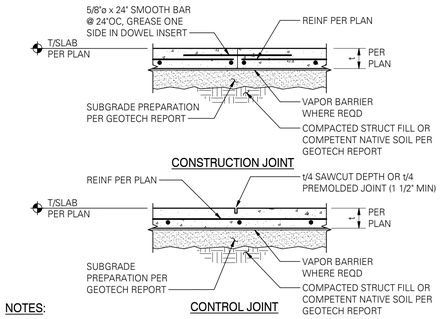

NOTES:
1. CONSTRUCTION JOINT IS A JOINT BETWEEN DIFFERENT POURS. CONTROL JOINT IS A CRACK CONTROL JOINT WITHIN THE SAME POUR.
2. USE "EARLY ENTRY DRY-CUT SAW" AS SOON AS POSSIBLE WITHOUT CAUSING RAVELING OF CONCRETE EDGES. SAWCUT ALONG SHORT DIRECTION OF POUR FIRST.
3. ALIGN A CONSTRUCTION OR CONTROL JOINT WITH RE-ENTRANT SLAB CORNERS, EACH WAY, TYPICAL.
4. CONSTRUCTION/CONTROL JOINT TO ENCLOSE APPROXIMATE SQUARE AREAS 144 SQUARE FEET MAXIMUM AT 4" SLAB AND 216 SQUARE FEET MAXIMUM AT 6" SLAB, WITH MAXIMUM PANEL ASPECT RATIO OF 1.3 TO 1.0.
5. CONTRACTOR TO SUBMIT CONSTRUCTION/CONTROL JOINT PLAN TO STRUCTURAL ENGINEER OF RECORD FOR REVIEW/APPROVAL.

3 TYPICAL SLAB ON GRADE JOINT DETAILS WITH REINFORCING

SCALE: 3/4" = 1'-0" (03201)

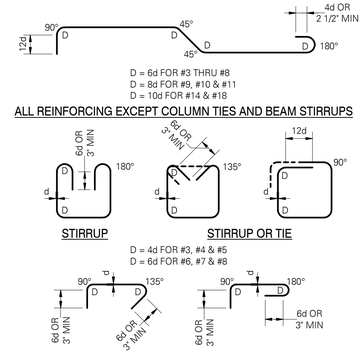

NOTE:
TIES AND CROSSTIES FOR SHEAR WALL BOUNDARY ELEMENTS SHALL BE DETAILED AS COLUMN TIES/CROSSTIES.

4 STANDARD HOOKS AND BENDS

SCALE: 3/4" = 1'-0" (03400)

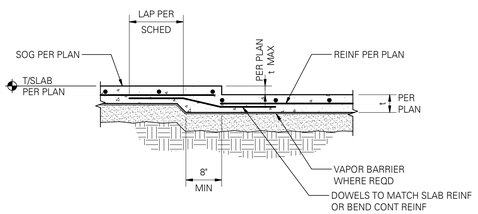

5 TYPICAL DEPRESSED SLAB DETAIL

SCALE: 3/4" = 1'-0" (03202)

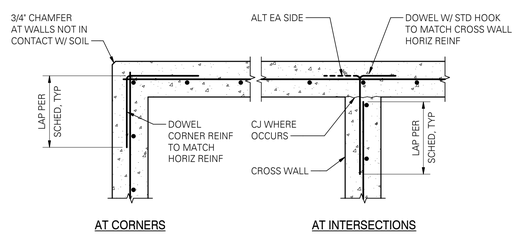

NOTES:
1. SPLICE LENGTHS PER LAP SPLICE AND DEVELOPMENT LENGTH SCHEDULE.
2. WALL REINFORCING PER PLAN OR ELEVATIONS, SECTIONS AND DETAILS.
3. AT FOOTINGS AND STEMWALLS, CORNER REINFORCING TO MATCH FOOTING AND STEMWALL HORIZONTAL REINFORCING.

6 PLAN - TYPICAL CORNER REINFORCING AT CONCRETE WALLS

SCALE: 3/4" = 1'-0" (03402)

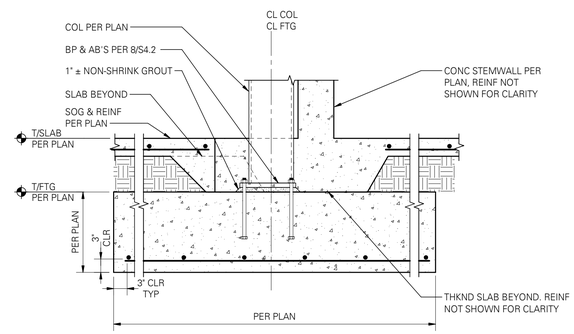

NOTE:
COMPLETELY COAT ALL STEEL BELOW SLAB AND 3" ABOVE SLAB WITH ASPHALTIC EMULSION.

7 INTERIOR SPREAD FOOTING AT STEEL COLUMN

SCALE: 3/4" = 1'-0"

01403A	GRADE 60 REINFORCING				
BAR SIZE	MISCELLANEOUS BARS		TOP BARS (see note #3)		HOOKED BARS
	Ld	Splice	Ld	Splice	Ldh
f'c = 3000psi					
#3	17	22	22	28	9
#4	22	29	29	38	11
#5	28	36	36	47	14
#6	33	43	43	56	17
#7	48	63	63	81	20
#8	55	72	72	93	22
#9	62	81	81	105	25
#10	70	91	91	118	28
#11	78	101	101	131	31
#14	93	N/A	121	N/A	38
#18	124	N/A	161	N/A	50

NOTES:
1. ALL TABULATED VALUES ARE IN INCHES.
2. VALUES FOR UNCOATED REINFORCING AND NORMAL WEIGHT CONCRETE WITH CLEAR SPACING > db, CLEAR COVER > db AND MINIMUM STIRRUPS OR TIES THROUGHOUT Ld OR CLEAR SPACING > 2db AND CLEAR COVER > db.
3. TOP REINFORCING = HORIZONTAL REINFORCING WITH MORE THAN 12" OF FRESH CONCRETE BELOW OR AS NOTED ON DOCUMENTS AS "TOP BAR".

8 LAP SPLICE AND DEVELOPMENT LENGTH SCHEDULE

SCALE: 3/4" = 1'-0" (01403A)

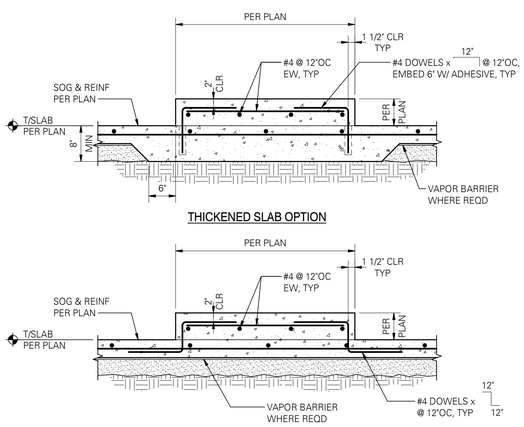

9 CONCRETE PAD ON SLAB ON GRADE

SCALE: 3/4" = 1'-0" (03205)

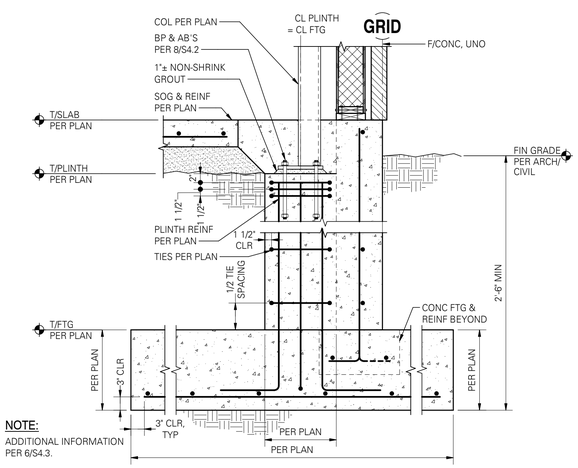

NOTE:
ADDITIONAL INFORMATION PER 6/S4.3.

10 COLUMN AT PLINTH AT EXTERIOR

SCALE: 3/4" = 1'-0"

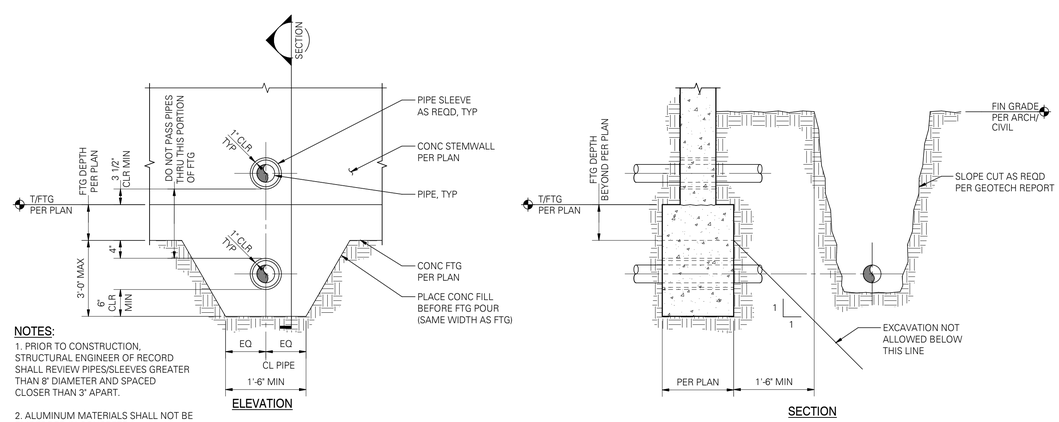

NOTES:
1. PRIOR TO CONSTRUCTION, STRUCTURAL ENGINEER OF RECORD SHALL REVIEW PIPES/SLEEVES GREATER THAN 8" DIAMETER AND SPACED CLOSER THAN 3" APART.
2. ALUMINUM MATERIALS SHALL NOT BE EMBEDDED IN CONCRETE.

11 TYPICAL PIPE AND TRENCH LOCATIONS AT CONCRETE STEMWALL/FOOTING

SCALE: 3/4" = 1'-0" (03190)

DCI ENGINEERS®
707 W 2nd Avenue
Spokane, Washington 99201
P: (509) 455-4448 www.dci-engineers.com
CIVIL / STRUCTURAL

© Copyright 02.2023 DiNardo Conversano Inc. All Rights Reserved
This drawing and specification, as an instrument of service, is the property of DiNardo Conversano Inc. It is not to be used for any other purpose or project without written permission from DiNardo Conversano Inc.

FOR PERMIT
The Contractor shall not use these drawings for construction until Contractor receives written approval for use in construction by the authority having jurisdiction and DCI Engineers.

MILLER STAUFFER ARCHITECTS
601 E. FRONT AVE., STE 201
COEUR D' ALENE, IDAHO 83814
P 208.664.1773 F 208.667.3174
WWW.MILLERSTAUFFER.COM

FOUNDATION DETAILS

Permit Set
02-17-2023

Powell Sta. Maintenance
Highway 12
Powell Station, Idaho

No.	Description	Date

PROJECT #	22041-0174
PRINCIPAL	JBC
PROJECT MANAGER	VAV

S4.1

2/17/2023 12:36:44 PM \\dci-fl-share\Revit_Users\jhancock_local\revit\STRUCT-22041-0174-R2023_Justin.Hancock.rvt

01901	TYPICAL ANCHOR BOLT SCHEDULE				
INSTALLATION TYPE	CAST-IN-PLACE (PRE-AUTHORIZED) [2]				DRILL-IN OPTIONS (SUBMITTAL REQUIRED) [3]
BOLT TYPE	STANDARD J-BOLT	HEADED ANCHOR	THREADED ROD ANCHOR	SIMPSON "SSTB" ANCHOR BOLT	ADHESIVE ANCHOR / EXPANSION ANCHOR
EMBEDMENT REQUIREMENTS	7 1/2"	12x DIA; 1/4" MIN; TACK		PER MFR	NOTE [4]; NOT ALLOWED AT P-T SLAB
LIMITS	5/8"Ø MAX	5/8"Ø THRU 2 1/2"Ø		FOR WOOD FRAME ONLY	5/8"Ø THRU 1"Ø
DIA = ANCHOR BOLT DIAMETER (NOMINAL)					

PROJECTION NOTE [1]

MIN EMBED UNO PER PLAN

NOTES:

[1] CONTRACTOR SHALL DETERMINE THE REQUIRED THREAD PROJECTION SUITABLE FOR THE THICKNESS OF MATERIAL BEING FASTENED PLUS GROUT ALLOWANCE, IF ANY, AND CONSTRUCTION TOLERANCES, UNO.

[2] CONTRACTOR MAY SELECT APPROPRIATE CAST-IN-PLACE ANCHOR BOLT OPTION WITHOUT SUBMITTAL.

[3] DRILL-IN OPTIONS ARE NOT APPROPRIATE AT ALL CONDITIONS. IF DRILL-IN METHOD IS PREFERRED, SUBMIT MANUFACTURER'S INFORMATION, ALLOWABLE LOAD VS EMBEDMENT DATA AND LOCATIONS OF WHERE SUBSTITUTIONS ARE REQUESTED. ENGINEER WILL DETERMINE IF SUBSTITUTION IS APPROPRIATE FOR LOCATION AND LOADING.

[4] EMBEDMENT OF DRILL-IN ANCHORS SHALL BE PER ENGINEERS'S SUBMITTAL REVIEW COMMENTS. EMBEDMENT SHALL BE (9) NINE TIMES THE NOMINAL ANCHOR DIAMETER, UNO.

[5] AT PRESSURE TREATED SILLS, PROVIDE HOT-DIPPED GALVANIZED OR STAINLESS STEEL ANCHORS.

1 TYPICAL ANCHOR BOLT SCHEDULE

SCALE: 1" = 1'-0" (01901)

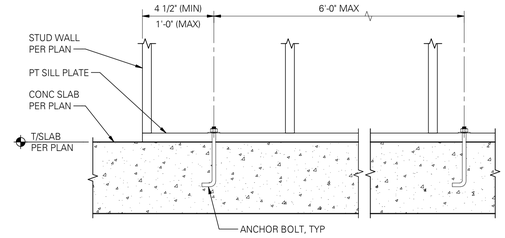

NOTES:

1. USE 5/8"Ø ANCHOR BOLTS WITH 7" MINIMUM EMBEDMENT INTO CONCRETE SLAB.

2. EACH SILL PLATE PIECE SHALL HAVE (2) BOLTS MINIMUM. HOLD-DOWN ANCHORS ARE NOT TO BE CONSIDERED AN ANCHOR BOLT.

3. LOCATE BOLTS WITHIN 1'-0" OF SILL PLATE PIECE ENDS AND AT 6'-0"OC MAXIMUM.

4. USE PLATE WASHER PER SHEAR WALL SCHEDULE AT EACH BOLT. STANDARD CUT WASHERS ARE ACCEPTABLE AT NON-SHEAR WALLS.

5. DO NOT DRILL OVERSIZE HOLES THRU SILL PLATE. USE 11/16"Ø DRILL BIT.

6. SILL PLATE THICKNESS AND FASTENING AT SHEAR WALLS PER SHEAR WALL SCHEDULE.

7. CONTACT THE ENGINEER-OF-RECORD FOR POST INSTALLED ANCHOR OPTIONS.

2 TYPICAL SILL PLATE ANCHORAGE TO CONCRETE

SCALE: 1" = 1'-0" (06910)

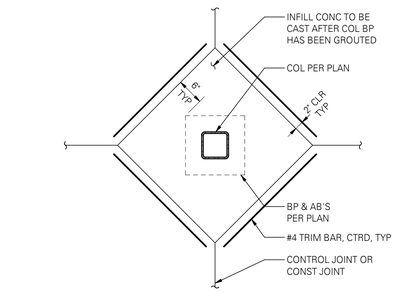

3 PLAN - TYPICAL CONTROL JOINT AT HSS COLUMN

SCALE: 3/4" = 1'-0" (03212)

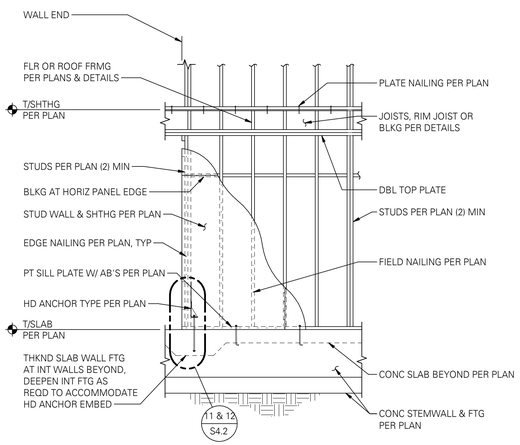

5 TYPICAL SHEAR WALL ELEVATION

SCALE: 1" = 1'-0" (06090M)

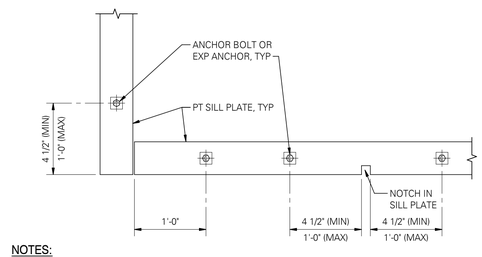

NOTES:

1. USE 5/8"Ø ANCHOR BOLT PER 2/S4.2.

2. EACH SILL PLATE PIECE SHALL HAVE (2) BOLTS MINIMUM. HOLD-DOWN ANCHORS ARE NOT TO BE CONSIDERED AN ANCHOR BOLT.

3. LOCATE BOLTS WITHIN 1'-0" OF SILL PLATE PIECE ENDS AND AT 6'-0"OC MAXIMUM.

4. USE PLATE WASHER PER SHEAR WALL SCHEDULE AT EACH BOLT. STANDARD CUT WASHERS ARE ACCEPTABLE AT NON-SHEAR WALLS.

5. DO NOT DRILL OVERSIZE HOLES THRU SILL PLATE. USE 11/16"Ø DRILL BIT.

6. SILL PLATE THICKNESS AND FASTENING AT SHEAR WALLS PER SHEAR WALL SCHEDULE.

7. CONTACT THE ENGINEER-OF-RECORD FOR POST INSTALLED ANCHOR OPTIONS.

6 PLAN - TYPICAL SILL PLATE ANCHORAGE TO CONCRETE

SCALE: 1" = 1'-0" (06911)

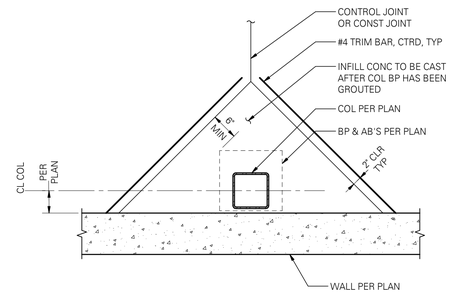

NOTE:

CONTROL JOINT AND INFILL CONCRETE REQUIRED AT ALL COLUMNS NOT LOCATED IN CLOSURE POUR.

7 PLAN - TYPICAL CONTROL JOINT AT EXTERIOR STEEL COLUMN

SCALE: 3/4" = 1'-0" (03213)

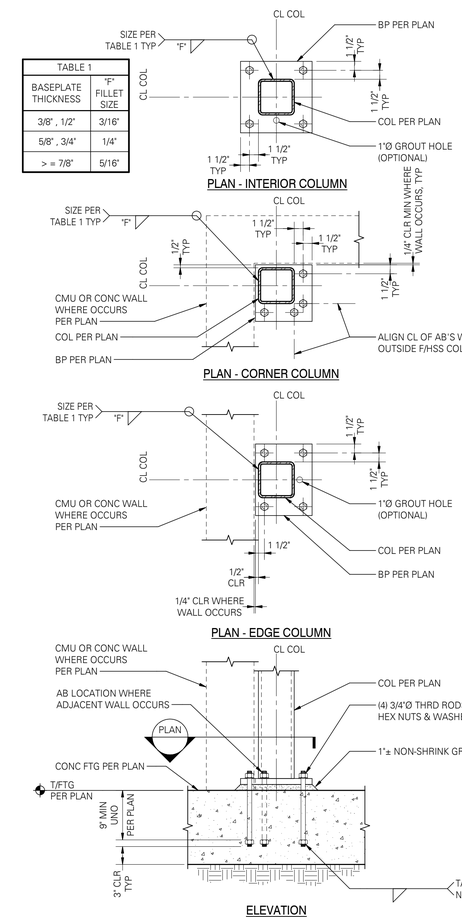

8 TYPICAL BASEPLATE TO FOUNDATION CONNECTION - HSS COLUMN

SCALE: 1" = 1'-0" (05030)

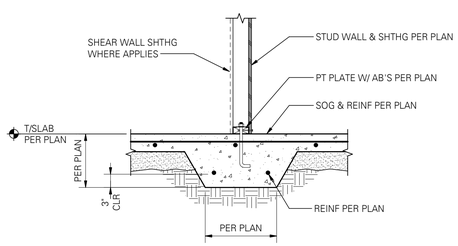

NOTE:

HORIZONTAL COLD JOINT BETWEEN FOOTING AND SLAB NOT PERMITTED.

9 INTERIOR THICKENED SLAB FOOTING AT STUD WALL

SCALE: 3/4" = 1'-0" (03020)

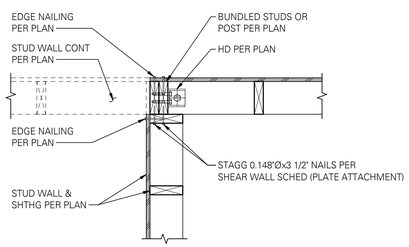

HDU HOLD-DOWNS

10 PLAN - INTERSECTING SHEAR WALLS

SCALE: 1" = 1'-0" (06110)

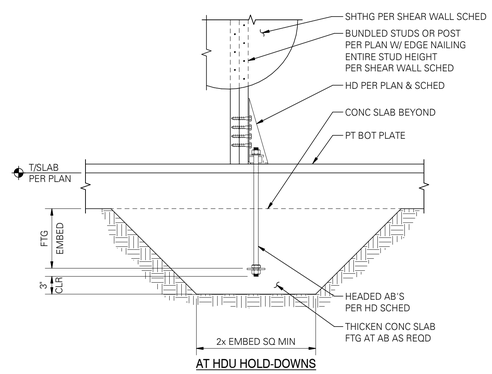

AT HDU HOLD-DOWNS

11 TYPICAL HOLD-DOWN AT THICKENED SLAB FOOTING

SCALE: 1" = 1'-0" (06093)

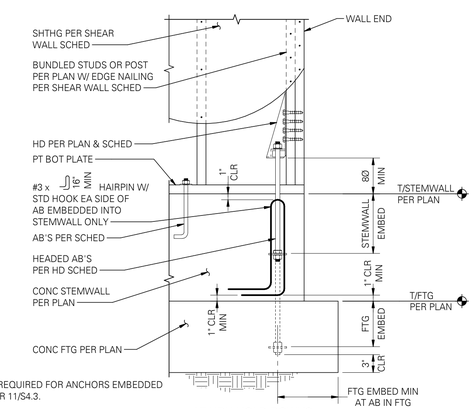

NOTES:

1. HAIRPINS NOT REQUIRED FOR ANCHORS EMBEDDED INTO FOOTING PER 11/S4.3.

2. MINIMUM FOOTING SIZE FOR ANCHORS EMBEDDED INTO FOOTING IS 2x EMBED SQUARE WITH DEPTH AS INDICATED.

AT HDU HOLD-DOWNS

12 TYPICAL HOLD-DOWN AT FOUNDATION - CONCRETE STEMWALL

SCALE: 1" = 1'-0" (06091)

DCI ENGINEERS®
707 W 2nd Avenue
Spokane, Washington 99201
P:(509) 455-4448
www.dci-engineers.com
CIVIL / STRUCTURAL

© Copyright 02.2023 DiNardo Conversano Inc. All Rights Reserved
This drawing and specification, as an instrument of service, is the property of the Architect and shall not be reproduced in part or whole, without written permission from DiNardo Conversano Inc.
It is unlawful to alter this document in any way without the Architect's written permission.

FOR PERMIT

The Contractor shall not use these drawings for construction until Contractor receives written approval for use in construction by the authority having jurisdiction and DCI Engineers.

MILLER STAUFFER ARCHITECTS
601 E. FRONT AVE., STE 201
COEUR D' ALENE, IDAHO 83814
P 208.664.1773 F 208.667.3174
WWW.MILLERSTAUFFER.COM

FOUNDATION DETAILS

Permit Set

02-17-2023

Powell Sta. Maintenance

Highway 12
Powell Station, Idaho

No.	Description	Date

PROJECT #	22041-0174
PRINCIPAL	JBC
PROJECT MANAGER	VAV

S4.2

\\dci-fl-share\Revit_Users\jhancock_local\revit\STRUCT-22041-0174-R2023_Justin.Hancock.rvt
2/17/2023 12:36:52 PM

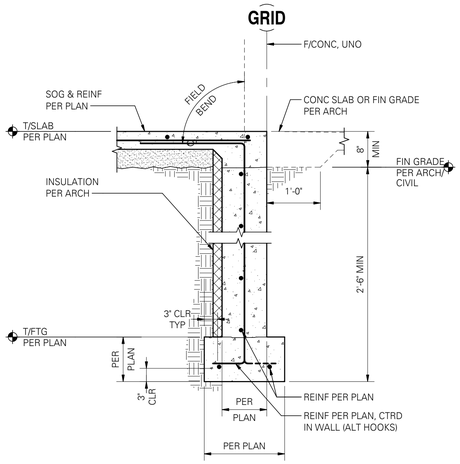

1 CONCRETE SLAB AND STEMWALL AT OPENINGS

SCALE: 3/4" = 1'-0" (03033MI)

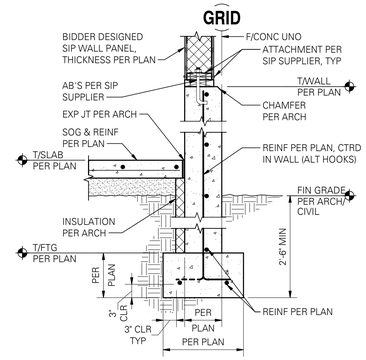

2 EXTERIOR FOOTING AND STEMWALL AT SIP WALL

SCALE: 3/4" = 1'-0"

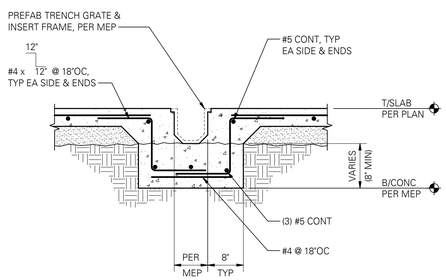

5 PREFABRICATED TRENCH DRAIN

SCALE: 3/4" = 1'-0" (03243A)

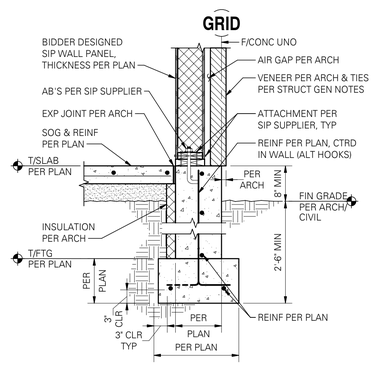

EXTERIOR FOOTING AND STEMWALL AT SIP WALL WITH VENEER

SCALE: 3/4" = 1'-0"

01430

SHEAR WALL SCHEDULE W6 FOR 0.131"Øx 2 1/2" NAILS IN DOUG-FIR LARCH (2018 IBC) [17]

SOME SHEAR WALL TYPES NOTED MAY NOT BE USED ON THIS PROJECT.

WALL TYPE	WALL SHEATHING APA-RATED [1, 2, 12, 13]	NAIL SIZE & SPACING AT ALL PANEL EDGES [4, 5]	BLOCKING & STUD SIZE AT ADJOINING PANEL EDGES [3, 6, 14]	RIM JOIST OR BLOCKING CONN TO TOP PLATE BELOW [7, 9]	2x PLATE ATTACHMENT	SILL PLATE ATTACHMENT		SHEAR CAPACITY LBS/FT
					NAILING TO WOOD RIM JOIST OR BLOCKING BELOW	ANCHOR BOLT TO CONCRETE BELOW [10]	SILL PLATE AT FOUNDATION [11]	
W6	15/32"	0.131"Øx2 1/2" @ 6"OC	2x	CLIP @ 16"OC	0.148"Øx3 1/4" @ 8"OC	5/8"Ø @ 48"OC	2x	260
2G8	5/8" GYP BOARD BOTH SIDES	NO. 6 TYPE S OR W DRYWALL SCREWS 1 1/4" LONG @ 8"OC STAGGERED	2x	CLIP @ 16"OC	0.148"Øx3 1/4" @ 12"OC	5/8"Ø @ 48"OC	2x	140

NOTES:

[1] INSTALL PANELS EITHER HORIZONTALLY OR VERTICALLY.

[2] WHERE SHEATHING IS APPLIED ON BOTH SIDES OF WALL, PANEL EDGE JOINTS ON 2x FRAMING SHALL BE STAGGERED SO THAT JOINTS ON THE OPPOSITE SIDES ARE NOT LOCATED ON THE SAME STUD.

[3] BLOCKING IS REQUIRED AT ALL PANEL EDGES.

[4] PROVIDE SHEAR WALL SHEATHING AND NAILING FOR THE ENTIRE LENGTH OF THE WALLS INDICATED ON THE PLANS. ENDS OF FULL HEIGHT WALLS ARE DESIGNATED BY WINDOWS OR DOORWAYS OR AS DESIGNATED ON PLANS. HOLD-DOWN REQUIREMENTS PER PLANS. (ALTERNATE NOTE: WALLS SHOWN WITH HORIZONTAL STRAPS BELOW AND/OR ABOVE OPENINGS REQUIRE SHEATHING, SHEAR WALL NAILING, ETC ABOVE AND BELOW ALL OPENINGS).

[5] SHEATHING EDGE NAILING IS REQUIRED AT ALL HOLD-DOWN POSTS. EDGE NAILING MAY ALSO BE REQUIRED TO EACH STUD USED IN BUILT-UP HOLD-DOWN POSTS. ADDITIONAL INFORMATION PER HOLD-DOWN DETAILS.

[6] INTERMEDIATE FRAMING TO BE 2x MINIMUM MEMBERS. ATTACH SHEATHING TO INTERMEDIATE FRAMING WITH 0.131"Øx2 1/2" NAILS AT 12"OC WHERE STUDS ARE SPACED AT 16"OC AND 0.131"Øx2 1/2" NAILS AT 6"OC WHERE STUDS ARE SPACED AT 24"OC.

[7] BASED ON 0.131"Øx1 1/2" NAILS USED TO ATTACH FRAMING CLIPS DIRECTLY TO FRAMING. USE 0.131"Øx2 1/2" NAILS WHERE INSTALLED OVER SHEATHING.

[8] FRAMING CLIPS: A35 OR LTP5 OR APPROVED EQUIVALENT.

[9] WHERE BOTTOM PLATE ATTACHMENT SPECIFIES (2) ROWS OF NAILS OR SCREWS, PROVIDE DOUBLE JOIST, RIM JOIST OR EQUAL BELOW. STAGGER NAILS/SCREWS IN ROWS 1 1/2" APART MINIMUM.

[10] ANCHOR BOLTS SHALL BE PROVIDED WITH HOT-DIPPED GALVANIZED STEEL PLATE WASHERS 0.229"x3"x3" MINIMUM. THE HOLE IN THE PLATE WASHER MAY BE DIAGONALLY SLOTTED 13/16"x1 3/4" PROVIDED A STANDARD CUT WASHER IS PLACED BETWEEN THE PLATE WASHER AND NUT. PLATE WASHER TO EXTEND TO WITHIN 1/2" OF THE EDGE OF THE SILL PLATE ON THE SIDE(S) WITH SHEATHING. AT 2x6 WALLS WITH SHEATHING ON BOTH SIDES USE PLATE WASHER 0.229"x4 1/2"x4 1/2" MINIMUM. EMBED ANCHOR BOLTS 7" MINIMUM INTO THE CONCRETE.

[11] PRESSURE TREATED MATERIAL CAN CAUSE EXCESSIVE CORROSION IN THE FASTENERS. PROVIDE HOT-DIPPED GALVANIZED (ELECTRO-PLATING IS NOT ACCEPTABLE) NAILS AND CONNECTOR PLATES (FRAMING ANGLES, ETC) FOR ALL CONNECTORS IN CONTACT WITH PRESSURE TREATED FRAMING MEMBERS. ADDITIONAL INFORMATION PER STRUCTURAL GENERAL NOTES.

[12] 7/16" APA-RATED SHEATHING (OSB) MAY BE USED IN PLACE OF 15/32" SHEATHING PROVIDED THAT ALL STUDS ARE SPACED AT 16"OC MAXIMUM.

[13] WHERE WOOD SHEATHING (W) IS APPLIED OVER GYPSUM SHEATHING (G), CONTACT THE ENGINEER OF RECORD FOR ALTERNATE NAILING REQUIREMENTS.

[14] AT ADJOINING PANEL EDGES, (2) 2x STUDS NAILED TOGETHER MAY BE USED IN PLACE OF SINGLE 3x STUD. DOUBLE 2x STUDS SHALL BE CONNECTED TOGETHER BY NAILING THE STUDS TOGETHER WITH 3" LONG NAILS OF THE SAME SPACING AND DIAMETER AS THE PLATE NAILING, PER SECTION.

[15] CONTACT THE STRUCTURAL ENGINEER OF RECORD FOR ADHESIVE OR EXPANSION BOLT ALTERNATIVES TO CAST-IN-PLACE ANCHOR BOLTS. SPECIAL INSPECTION MAY BE REQUIRED.

[16] NAIL STUDS TO 3x SILL PLATES WITH EITHER (2) 0.148"Øx4" END NAILS OR (4) 0.131"Øx2 1/2" TOENAILS.

[17] WX WHERE "W" INDICATES WOOD SHEATHING AND "X" INDICATES EDGE NAIL SPACING. GX WHERE "G" INDICATES GYP BOARD SHEATHING AND "X" INDICATES SCREW SPACING.

[18] EDGE NAILS SHALL BE LOCATED 3/8" FROM PANEL EDGES.

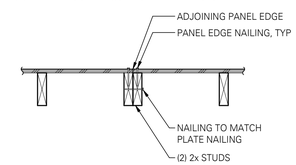

PLAN

7 SHEAR WALL SCHEDULE - DOUG-FIR LARCH

SCALE: 1" = 1'-0" (01430)

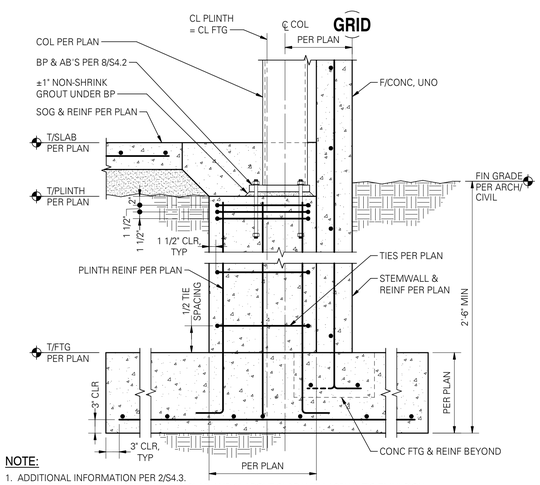

NOTE:

1. ADDITIONAL INFORMATION PER 2/S4.3.
2. COMPLETELY COAT ALL STEEL BELOW SLAB AND 3" ABOVE SLAB WITH ASPHALTIC EMULSION.

9 COLUMN AT PIER AT EXTERIOR

SCALE: 3/4" = 1'-0"

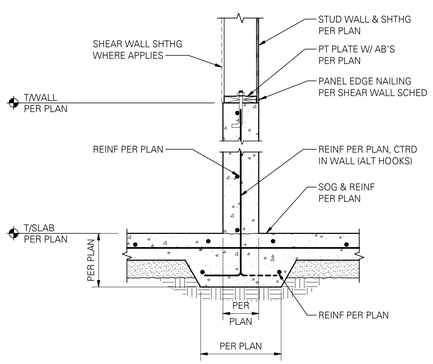

NOTE:

HORIZONTAL COLD JOINT BETWEEN FOOTING AND SLAB NOT PERMITTED.

10 THICKENED SLAB AND STEMWALL AT STUD WALL

SCALE: 3/4" = 1'-0"

01420

HOLD-DOWN/STRAP SCHEDULE - DOUG-FIR STUDS

[1, 2, 7, 9] ← INDICATES FOOTNOTES

	TYPE	NUMBER OF STUDS/POST [3, 10]	NAILS, SCREWS OR BOLTS	ANCHOR [4]					NOTES
				DIAMETER [8]	CONCRETE EMBEDMENT/CAPACITY				
					STEMWALL [5]		FOOTING		
					EMBED CIP [6, 11]	CAPACITY	EMBED CIP [6]	CAPACITY	
WOOD TO CONCRETE	HDU4	(2) 2x	(10) SDS1/4x2 1/2	5/8"Ø	10"	4.6k	8"	4.6k	– – – –

NOTES:

[1] SOME HOLD-DOWN TYPES MAY NOT BE USED ON THIS PROJECT.

[2] TYPICAL HOLD-DOWN DETAILS PER 11/S4.2 AND 12/S4.2. ANCHOR REINFORCEMENT REQUIRED AT STEMWALLS.

[3] PROVIDE PANEL EDGE NAILING PER SHEAR WALL SCHEDULE AT HOLD-DOWN STUDS/POSTS.

[4] BASED ON MINIMUM f'c = 3000 PSI CONCRETE.

[5] STEMWALLS SHALL BE 8" WIDE x 18" TALL MINIMUM.

[6] CAST-IN-PLACE (CIP) TYPE THREADED RODS AT HOLD-DOWNS SHALL HAVE TWO HEX HEAD NUTS WITH OVERSIZED WASHERS.

[7] INCLUDES 1.6 LOAD DURATION INCREASE FOR WOOD.

[8] AT PRESSURE TREATED SILLS, USE HOT DIPPED GALVANIZED BOLTS.

[9] POST INSTALLED HOLD-DOWN OPTIONS MAY BE AVAILABLE AT SOME CONDITIONS. CONTACT ENGINEER OF RECORD PRIOR TO CONSTRUCTION.

[10] NAIL LAMINATE MULTIPLE 2x STUDS WITH PLATE NAILING PER SHEAR WALL SCHEDULE.

[11] STUD WALLS SHALL BE 2x6, CENTER HOLD-DOWN IN STUD WALL.

11 HOLD-DOWN/STRAP SCHEDULE - DOUG-FIR STUDS

SCALE: 1" = 1'-0" (01420MI)

DCI ENGINEERS®
707 W 2nd Avenue
Spokane, Washington 99201
P: (509) 455-4448 www.dci-engineers.com
CIVIL / STRUCTURAL

© Copyright 02.2023 DiNardo Conversano Inc. All Rights Reserved
Reproduction or distribution of this document or any part thereof without written permission from DiNardo Conversano Inc. is prohibited. It is protected under the copyright laws of the United States of America.

FOR PERMIT
The Contractor shall not use these drawings for construction until Contractor receives written approval for use in construction by the authority having jurisdiction and DCI Engineers.

MILLER STAUFFER ARCHITECTS
601 E. FRONT AVE., STE 201
COEUR D' ALENE, IDAHO 83814
P 208.664.1773 F 208.667.3174
WWW.MILLERSTAUFFER.COM

FOUNDATION DETAILS

Permit Set

02-17-2023

Powell Sta. Maintenance
Highway 12
Powell Station, Idaho

PROFESSIONAL ENGINEER 3697 STATE OF IDAHO JUSTIN B. CONVERSANO

No.	Description	Date

PROJECT # 22041-0174
PRINCIPAL JBC
PROJECT MANAGER VAV

S4.3

\\dci-fl-share\Revit_Users\hancock_local\revit\STRUCT-22041-0174-R2023_Justin.Hancock.rvt
2/17/2023 12:37:00 PM

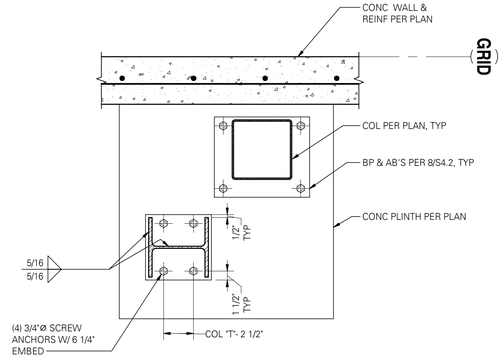

NOTE:
DO NOT WELD IN COLUMN "K" REGION

3 CRANE COLUMN BASEPLATE - PLAN

SCALE: 1" = 1'-0"

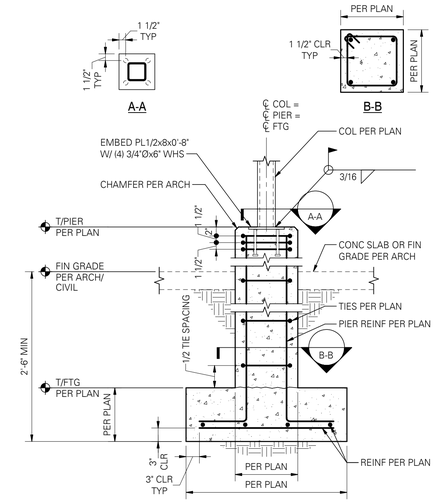

4 EXTERIOR CANOPY COLUMN FOUNDATION

SCALE: 3/4" = 1'-0"

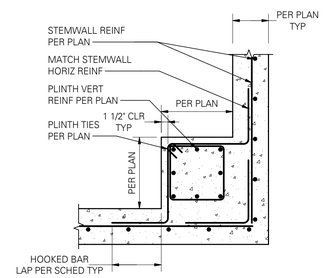

16"SQ PLINTH

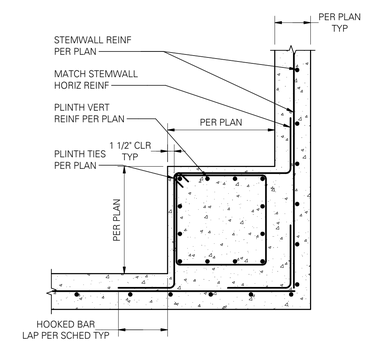

24"SQ PLINTH

7 CORNER PLINTH AT STEMWALL

SCALE: 3/4" = 1'-0"

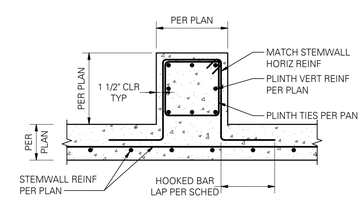

16"SQ PLINTH

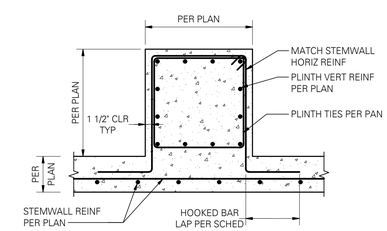

24"SQ PLINTH

11 PLINTH AT STEMWALL

SCALE: 3/4" = 1'-0"

FOR PERMIT
The Contractor shall not use these drawings for construction until Contractor receives written approval for use in construction by the authority having jurisdiction and DCI Engineers.

DCI ENGINEERS®
707 W 2nd Avenue
Spokane, Washington 99201
P: (509) 455-4448 www.dci-engineers.com
CIVIL / STRUCTURAL
© Copyright 02.2023 DiNardo Conversano Inc. All Rights Reserved
This drawing and design is the property of DiNardo Conversano Inc. It is not to be altered in part or whole, without written permission from DiNardo Conversano Inc.
It is not to be used for any purpose not specifically agreed to in writing by DiNardo Conversano Inc.

MILLER STAUFFER ARCHITECTS
601 E. FRONT AVE. STE 201
COEUR D' ALENE, IDAHO 83814
P 208.664.1773 F 208.667.3174
WWW.MILLERSTAUFFER.COM

FOUNDATION DETAILS

Permit Set
02-17-2023

Powell Sta. Maintenance
Highway 12
Powell Station, Idaho

PROFESSIONAL ENGINEER 13697 STATE OF IDAHO JUSTIN B. CONVERSANO

No.	Description	Date

PROJECT #	22041-0174
PRINCIPAL	JBC
PROJECT MANAGER	VAV

S4.4

2/17/2023 12:37:15 PM \\dci-li-share\Revit_Users\jhancock_local\rvt\STRUCT-22041-0174-R2023_Justin.Hancock.rvt

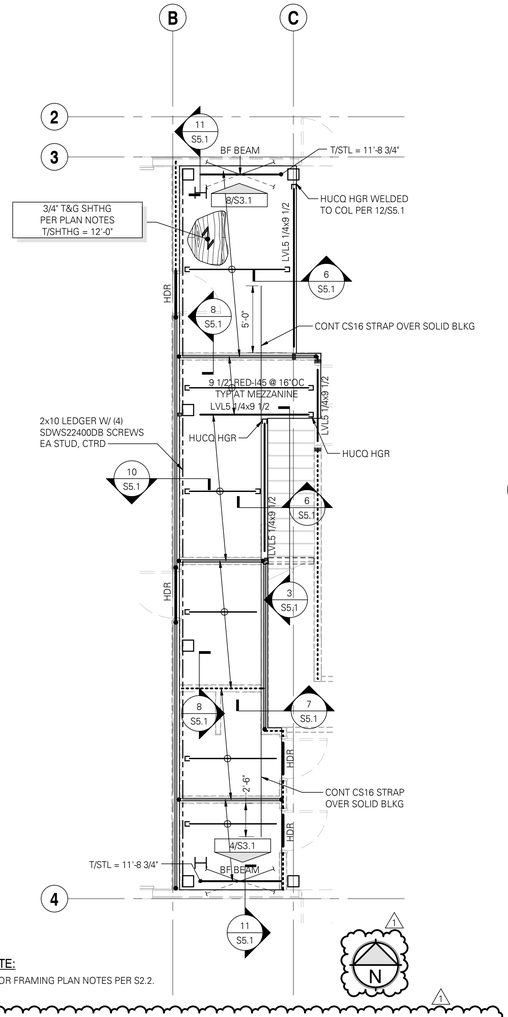

NOTE:
FLOOR FRAMING PLAN NOTES PER S2.2.

5 MEZZANINE FRAMING PLAN
SCALE: 3/16" = 1'-0"

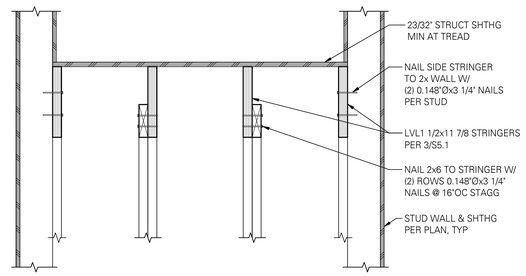

2 TYPICAL INTERIOR STAIRWAY SECTION AT SLOPED STRINGERS
SCALE: 1" = 1'-0" (06301M)

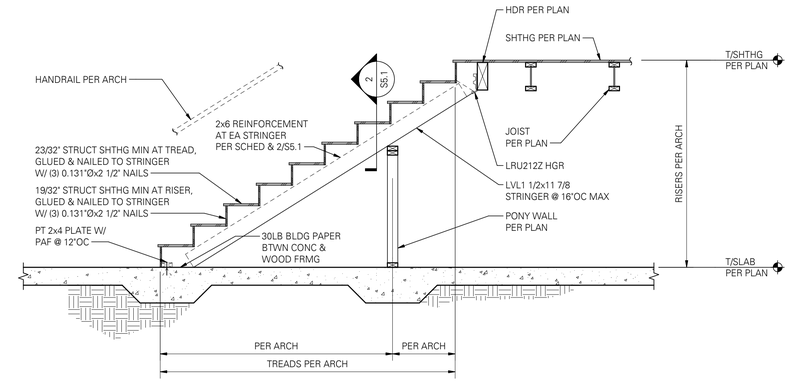

3 TYPICAL INTERIOR STAIRWAY ELEVATION
SCALE: 1" = 1'-0" (06300M)

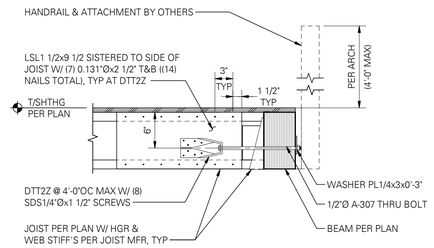

6 TYPICAL JOIST TO BEAM CONNECTION
SCALE: 1" = 1'-0" (06204M)

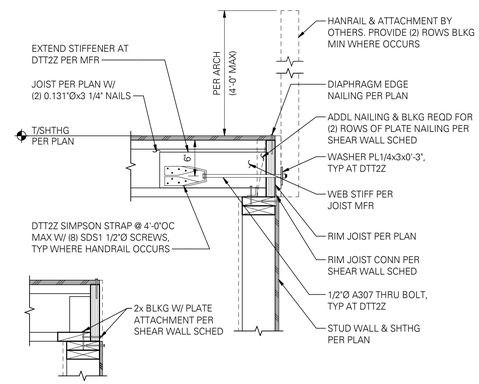

ALTERNATE RIM JOIST CONNECTION DETAIL- FOR SINGLE ROW OF PLATE NAILING/BLOCKING ONLY

7 EXTERIOR WALL PERPENDICULAR TO FLOOR JOISTS
SCALE: 1" = 1'-0" (06002M)

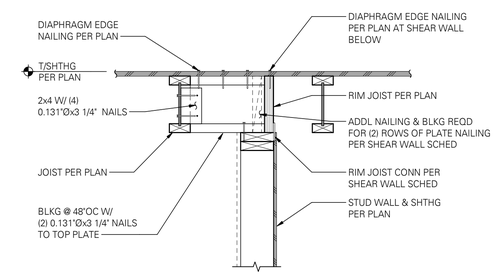

NOTE:
ALTERNATE RIM JOIST CONNECTION DETAIL PER 7/S5.1 MAY BE USED AT WALLS WITH (1) ROW OF PLATE NAILING.

8 INTERIOR WALL PARALLEL TO FLOOR JOISTS
SCALE: 1" = 1'-0" (06020M)

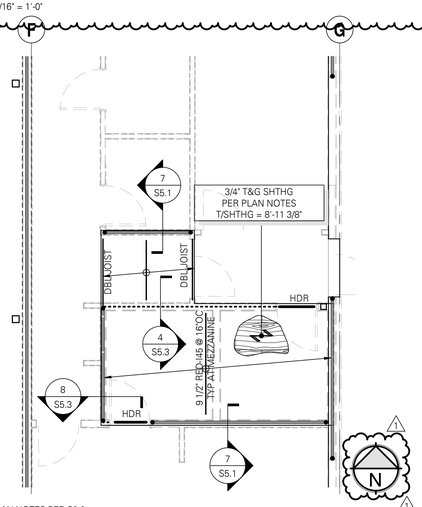

NOTE:
FLOOR FRAMING PLAN NOTES PER S2.2.

9 OFFICE MEZZANINE FRAMING PLAN
SCALE: 3/16" = 1'-0"

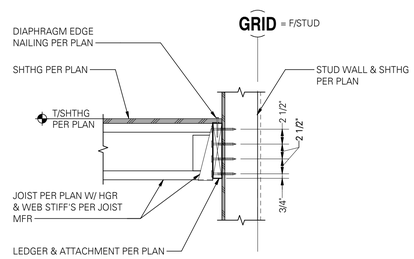

10 JOISTS PERPENDICULAR TO STUD WITH LEDGER
SCALE: 1" = 1'-0"

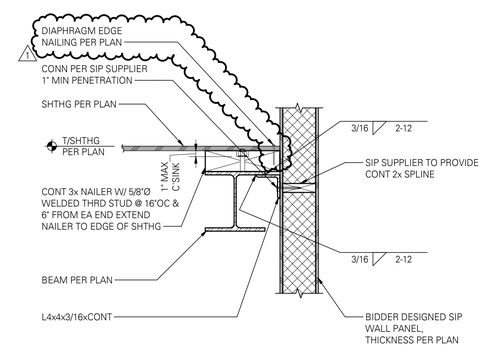

11 SIP CONNECTION AT MEZZANINE
SCALE: 1" = 1'-0"

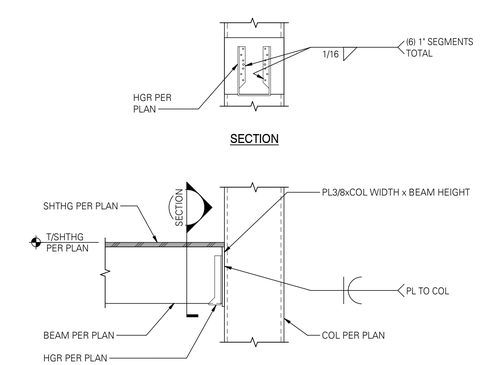

12 BEAM HANGER WELDED TO STEEL COLUMN
SCALE: 1" = 1'-0"

DCI ENGINEERS®
707 W 2nd Avenue
Spokane, Washington 99201
P: (509) 455-4448 www.dci-engineers.com
CIVIL / STRUCTURAL

© Copyright 03.2023 DiNardo Conversano Inc. All Rights Reserved
These drawings and specifications are the property of DiNardo Conversano Inc. and shall not be reproduced or used in other projects without written permission from DiNardo Conversano Inc.

FOR PERMIT
The Contractor shall not use these drawings for construction until Contractor receives written approval for use in construction by the authority having jurisdiction and DCI Engineers.

MILLER STAUFFER ARCHITECTS
601 E. FRONT AVE., STE 201
COEUR D' ALENE, IDAHO 83814
P 208.664.1773 F 208.667.3174
WWW.MILLERSTAUFFER.COM

FRAMING DETAILS

Permit Set
02-17-2023

Powell Sta. Maintenance
Highway 12
Powell Station, Idaho

No.	Description	Date
1	DBS PERMIT REVISION	03/17/23

PROJECT # 22041-0174
PRINCIPAL JBC
PROJECT MANAGER VAV

S5.1

C:_localtevit\STRUCT-22041-0174-R2023_kevanaFU47P.rvt
3/15/2023 3:33:43 PM

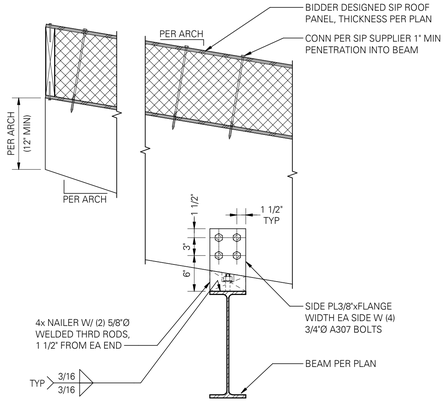

1 BEAM BEARING AT BEAM AT OVERHANG

SCALE: 1" = 1'-0"

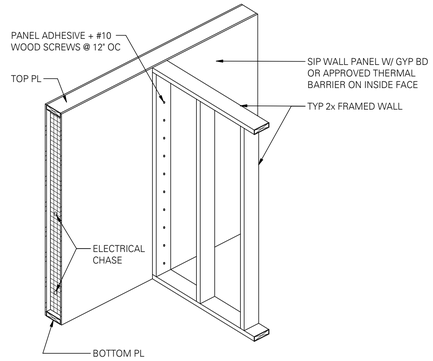

2 TYPICAL INTERIOR 2x WALL TO SIP PANEL

SCALE: 3/4" = 1'-0"

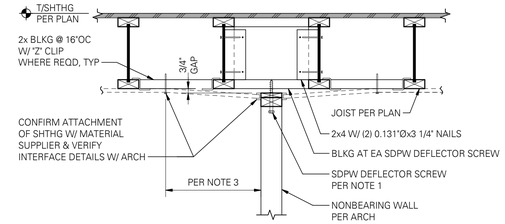

WALL PARALLEL TO FLOOR/ROOF FRAMING

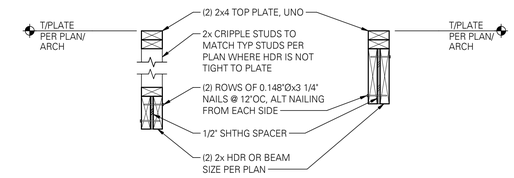

AT 2x4 WALLS

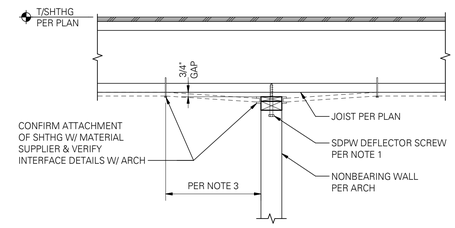

WALL PERPENDICULAR TO FLOOR/ROOF FRAMING

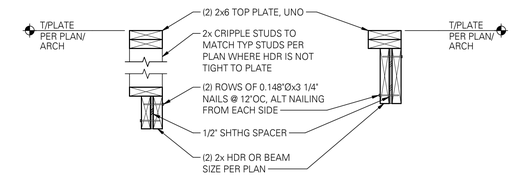

AT (2) 2x HEADER OR BEAM

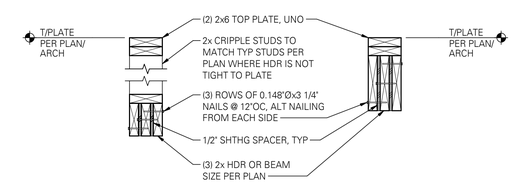

AT (3) 2x HEADER OR BEAM

AT 2x6 WALLS

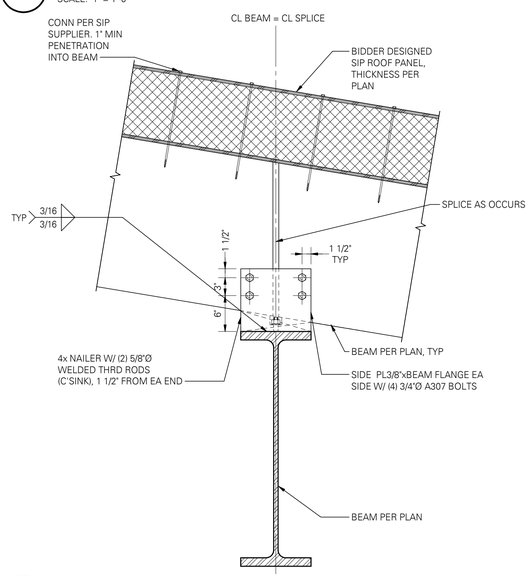

5 BEAM BEARING AT BEAM

SCALE: 1" = 1'-0"

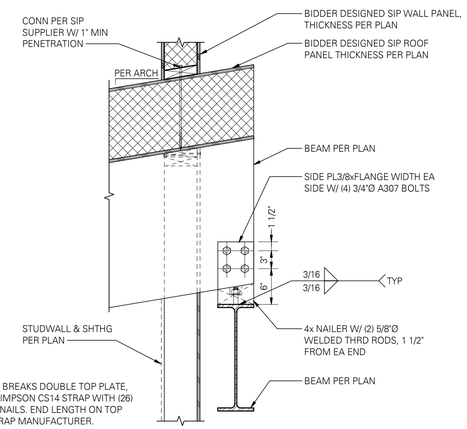

NOTE:
WHERE BEAM BREAKS DOUBLE TOP PLATE, STRAP WITH SIMPSON CS14 STRAP WITH (26) 0.148"Ø x 2 1/2" NAILS. END LENGTH ON TOP PLATE PER STRAP MANUFACTURER.

6 SIP ROOF PANEL TO WALL CONNECTION

SCALE: 1" = 1'-0"

NOTES:

1. CONTRACTOR TO REFERENCE SDPW DEFLECTOR SCREW SPECIFICATIONS IN REGARDS TO PRODUCT TYPE AT 1x AND 2x TOP PLATES OR (2) 2x TOP PLATES. FOR 1x AND 2x TOP PLATES A MAXIMUM SPACING EQUALS 42"OC AND FOR (2) 2x TOP PLATES A MAXIMUM SPACING EQUALS 48"OC. SDPW DEFLECTOR SCREWS MUST BE PLACED AT MINIMUM 6" FROM EACH END OF WALL. INSTALL WITH 3/4" OFFSET BELOW BOTTOM OF PLATE AND HEAD OF SDPW DEFLECTOR SCREW.

2. DCI ENGINEERS IS ONLY RESPONSIBLE FOR THE POSITIVE CONNECTION (SDPW DEFLECTOR SCREW) FROM THE NONBEARING WALL TO THE PRIMARY STRUCTURE. THE CONTRACTOR IS TO CONFIRM THE ATTACHMENT OF THE CEILING SHEATHING TO THE NONBEARING WALL WITH THE SUB-CONTRACTOR PERFORMING THE FRAMING, THE ARCHITECT, THE MATERIAL SUPPLIER, AND THE ACOUSTICAL CONSULTANT AS THERE ARE VARIOUS CONSIDERATIONS INCLUDING MATERIAL ATTACHMENT SPECIFICATIONS, PREFERENTIAL FRAMING TECHNIQUES BY THE SUB-CONTRACTOR, FIRE RATING AND ACOUSTICAL CAULKING REQUIREMENTS, AND NONBEARING WALL FINISH INTERFACE REQUIREMENTS. ALL OF WHICH ARE OUTSIDE OF DCI ENGINEERS EXPERTISE.

3. 16" MINIMUM, 24" MAXIMUM. CONFIRM SPACING OF CONNECTION WITH MATERIAL SUPPLIER, MATERIAL SUPPLIER TO ACCOUNT FOR MOVEMENT OF STRUCTURE.

4. 1x TOP PLATE CAN BE REMOVED GIVEN THE GAP IS 1/2" MAXIMUM.

7 NON-STRUCTURAL PARTITION WALL CONNECTION

SCALE: 1" = 1'-0" (06905)

8 TYPICAL BUILT-UP 2x HEADER OR BEAM

SCALE: 1" = 1'-0" (06212)

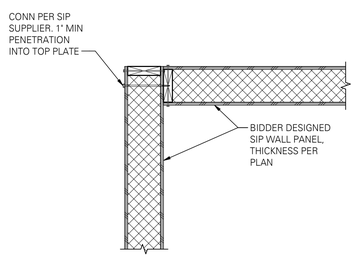

9 SIP WALL PANEL AT SIP WALL PANEL

SCALE: 1" = 1'-0"

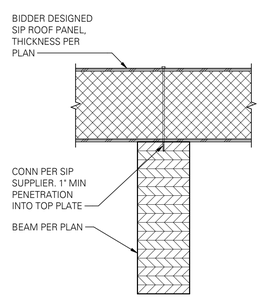

10 TYPICAL SIP PANEL TO BEAM CONNECTION

SCALE: 1" = 1'-0"

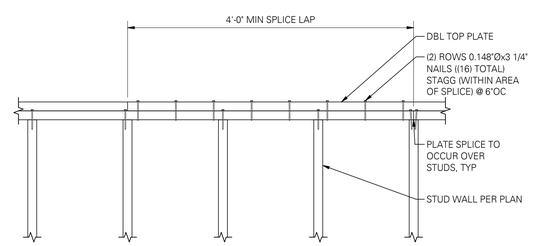

NOTE:
FLOOR/ROOF JOISTS NOT SHOWN FOR CLARITY.

11 TYPICAL PLATE SPLICE DETAIL

SCALE: 1" = 1'-0" (06904)

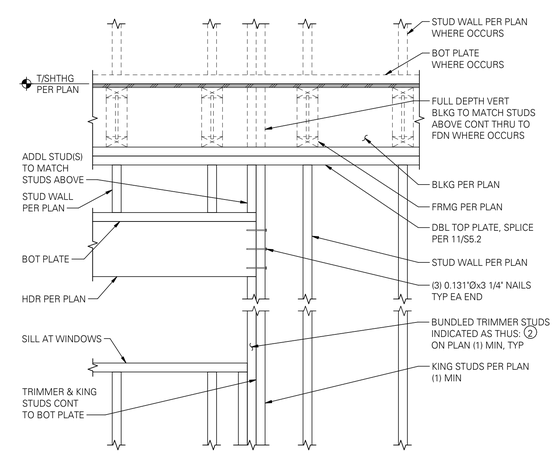

12 TYPICAL HEADER

SCALE: 1" = 1'-0" (06211)

DCI ENGINEERS®
707 W 2nd Avenue
Spokane, Washington 99201
P: (509) 455-4448
www.dci-engineers.com
CIVIL / STRUCTURAL

© Copyright 02.2023 DCI Engineers Inc. All Rights Reserved
This document is the property of DCI Engineers Inc. Reproduction or distribution of this document without written permission from DCI Engineers Inc. is prohibited.

FOR PERMIT
The Contractor shall not use these drawings for construction until Contractor receives written approval for use in construction by the authority having jurisdiction and DCI Engineers.

MILLER STAUFFER ARCHITECTS
601 E. FRONT AVE., STE 201
COEUR D' ALENE, IDAHO 83814
P 208.664.1773 F 208.667.3174
WWW.MILLERSTAUFFER.COM

FRAMING DETAILS
Permit Set
02-17-2023

Powell Sta. Maintenance
Highway 12
Powell Station, Idaho

No.	Description	Date

PROJECT # 22041-0174
PRINCIPAL JBC
PROJECT MANAGER VAV

S5.2

2/17/2023 12:37:32 PM \\dci-li-share\Revit_Users\jhancock_local\revit\STRUCT-22041-0174-R2023_Justin.Hancock.rvt

BOLTED SINGLE SHEAR PLATE CONNECTION - SCHEDULE "A"									
3/4"Ø - A325-N	SINGLE ROW			BEAM Fy=50KSI - CONNECTION PLATE Fy=36KSI					
BEAM SIZE	"N" BOLTS REQUIRED (1)	SHEAR PLATE OR WT STEM THICKNESS	MIN HSS COLUMN WALL THICKNESS (8)	WELD SIZE t	MAX SINGLE COPE DEPTH (7)	MAX DOUBLE COPE DEPTH (7)	CONNECTION CAPACITY-LRFD [ASD] (3) (KIPS)		
							UNCOPED	COPED	
								SINGLE	DOUBLE
C8,C9,C10	2	5/16"	1/4"	1/4"	1 1/4"	*NR (9)*	21.5 [14.3]	21.5 [14.3]	*NR (9)*
W8	2	5/16"	1/4"	1/4"	1 1/4"	*NR (9)*	21.5 [14.3]	14.7 [9.8]	*NR (9)*
W10	2	5/16"	1/4"	1/4"	2 1/2"	1 1/4"	21.5 [14.3]	19.2 [12.8]	16.6 [11.0]
C12,C15	3	5/16"	1/4"	1/4"	2"	1 1/4"	42.0 [28.0]	42.0 [28.0]	40.9 [27.2]
W12	3	5/16"	1/4"	1/4"	2"	1 1/4"	41.7 [27.8]	30.8 [20.5]	25.1 [16.7]
W14	3	5/16"	1/4"	1/4"	2 1/2"	1 1/2"	42.0 [28.0]	*EQUAL TO UNCOPED CAPACITY*	*EQUAL TO UNCOPED CAPACITY*
W16	4	5/16"	1/4"	1/4"	2 1/2"	1 1/2"	61.3 [40.9]		
W18	5	5/16"	1/4"	1/4"	2 1/2"	1 1/2"	80.2 [53.5]		
W21	6	5/16"	1/4"	1/4"	2 1/2"	1 1/2"	84.5 [56.4]		
W24	7	5/16"	1/4"	1/4"	2 1/2"	1 1/2"	104.0 [69.3]		
W27	8	5/16"	1/4"	1/4"	2 1/2"	*NR (9)*	123.1 [82.1]		*NR (9)*
W30	8	5/16"	1/4"	1/4"	2 1/2"	*NR (9)*	123.1 [82.1]		*NR (9)*
W33	9	5/16"	1/4"	1/4"	2 1/2"	*NR (9)*	142.2 [94.8]		*NR (9)*
W36	10	5/16"	1/4"	1/4"	2 1/2"	*NR (9)*	158.3 [105.5]		*NR (9)*

BOLTED SINGLE ROW SHEAR PLATE CONNECTION NOTES:

1. PROVIDE EITHER STANDARD OR HORIZONTAL SHORT SLOTTED HOLES AS PERMITTED BY AISC J3.2 IN THE BEAM WEB AND/OR THE SHEAR PLATE.

2. WHERE SHORT-SLOTTED HOLES ARE USED, PROVIDE HARDENED WASHERS PER AISC J3.2.

3. CAPACITIES BASED ON AISC 15TH EDITION WITH ASTM A325-N BOLTS.

4. HORIZONTAL DISTANCE FROM SUPPORT FACE TO CENTERLINE OF BOLT GROUP SHALL BE AS SHOWN IN DETAIL, BUT SHALL NOT EXCEED 3 1/2" IN THE AS-BUILT CONDITION. SUPPORT FACE FOR TEE IS THE INSIDE FACE OF FLANGE.

5. GAP BETWEEN BEAM END AND SUPPORT FACE SHALL BE 1/2" EXCEPT FOR "WT" CONNECTORS USED WITH HSS COLUMNS. WHERE "WT" ARE USED AS SHEAR TAB ELEMENTS, THE GAP BETWEEN FACE OF COLUMN AND END OF BEAM SHALL NOT EXCEED THE LESSER OF 1 1/2" OR THE "k" DISTANCE OF THE "WT" PLUS 1/4".

6. FIELD FILLET WELDS SHALL BE SIZED TO BE AT LEAST 1/8" LARGER THAN THE WELD SIZE SHOWN IN SCHEDULE "A", UNLESS PROPER FIT-UP IS VERIFIED BY A SPECIAL INSPECTOR PRIOR TO WELDING.

7. COPE DEPTHS (SINGLE AND DOUBLE) SHALL NOT EXCEED THE LESSER OF THOSE SHOWN IN SCHEDULE "A", NOR AS ALLOWED BY BOLT HOLE SPACING AND MINIMUM EDGE DISTANCE REQUIREMENTS. COPE LENGTHS (SINGLE AND DOUBLE) SHALL NOT EXCEED 6 1/2".

8. UNCOPED CAPACITIES OF WT CONNECTIONS ARE VALID WITH MINIMUM NOMINAL HSS COLUMN WALL TABULATED THICKNESS. THE EFFECTIVE THROAT OF FLARE BEVEL GROOVE WELDS IS BASED ON OUTSIDE RADIUS OF HSS, AND IS TAKEN AS 5/8 TIMES THE HSS WALL THICKNESS BASED ON AWS D1.1, TABLE 2.1. WHEN 3/4" DIAMETER A325-N BOLTS ARE USED, A 3/16" HSS COLUMN WALL THICKNESS IS PERMITTED WITH A 20% REDUCTION OF THE WT CONNECTION CAPACITY.

9. NR = NOT RECOMMENDED. DOUBLE COPES FOR THESE BEAMS ARE RESTRICTED BY CONNECTION GEOMETRY AND/OR LARGE REDUCTIONS IN SHEAR CAPACITY. DOUBLE COPES ARE POSSIBLE, BUT CAPACITIES MUST BE CALCULATED FOR SPECIFIC BEAM AND GIRDER GEOMETRIES AND MUST BE DETAILED SEPARATELY.

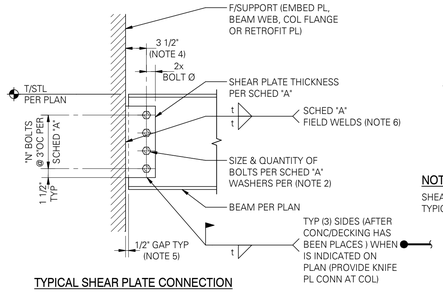

TYPICAL SHEAR PLATE CONNECTION

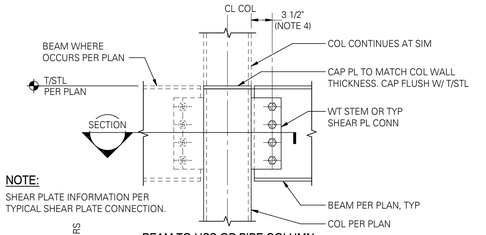

NOTE:
SHEAR PLATE INFORMATION PER TYPICAL SHEAR PLATE CONNECTION.

BEAM TO HSS OR PIPE COLUMN

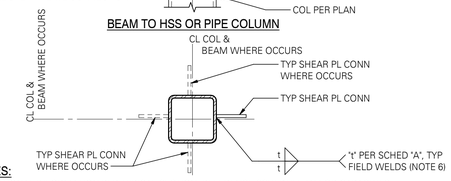

NOTES:
1. ADDITIONAL INFORMATION PER TYPICAL SECTION, REFERENCE SCHEDULE "A" FOR CAPACITIES.

2. SINGLE PLATE SHEAR TAB CONNECTIONS ARE VALID FOR ALL SQUARE AND RECTANGLE HSS COLUMNS WITH MINIMUM WALL THICKNESS NOTED IN SCHEDULE "A" EXCEPT:
- HSS9x__x1/4
- HSS10x__x1/4
- HSS12x__x1/4
- HSS12x__x5/16
- ALL HSS LARGER THAN 14x

3. FOR COLUMNS THAT DO NOT MEET THE SIZE REQUIREMENTS OF NOTE 2, USE ALTERNATE SECTION DETAIL BELOW.

TYPICAL SECTION AT HSS COLUMN

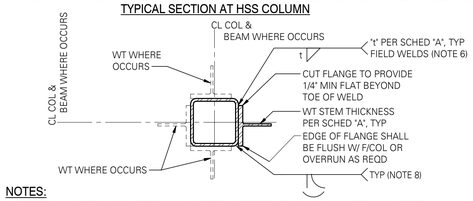

NOTES:
1. ADDITIONAL INFORMATION PER TYPICAL SECTION, REFERENCE SCHEDULE "A" FOR CAPACITIES.

2. WT SHEAR TAB CONNECTIONS ARE VALID FOR ALL SQUARE AND RECTANGLE HSS COLUMNS. USE TYPICAL SECTION DETAIL WHERE POSSIBLE.

ALTERNATE SECTION AT HSS COLUMN

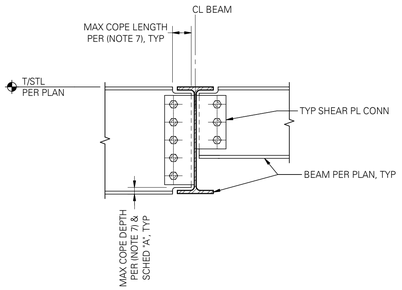

BEAM TO BEAM CONNECTION
SHEAR PLATE INFORMATION PER TYPICAL SHEAR PLATE CONNECTION.

5 SINGLE SHEAR PLATE (SINGLE ROW) CONNECTIONS
SCALE: 1" = 1'-0" (05201M)

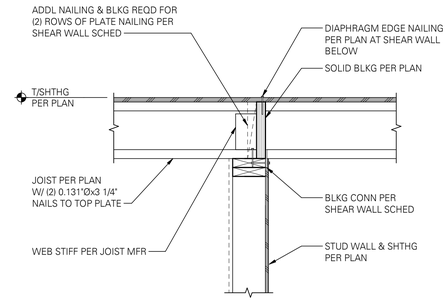

NOTE:
ALTERNATE RIM JOIST CONNECTION DETAIL PER 7/S5.1 MAY BE USED AT WALLS WITH (1) ROW OF PLATE NAILING.

4 INTERIOR WALL PERPENDICULAR TO FLOOR JOISTS
SCALE: 1" = 1'-0" (06021M)

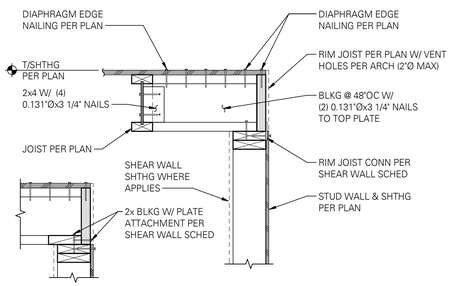

ALTERNATE RIM JOIST CONNECTION DETAIL- FOR SINGLE ROW OF PLATE NAILING/BLOCKING ONLY

8 EXTERIOR WALL PARALLEL TO FLOOR JOISTS
SCALE: 1" = 1'-0" (06060M)

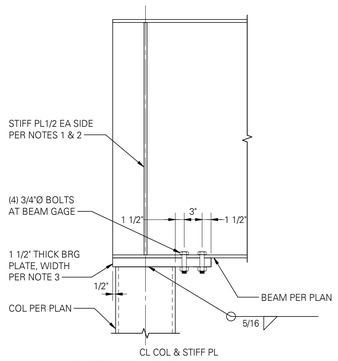

WHERE BEAM ENDS

NOTES: BEAM OVER COLUMN

1. CHAMFER CORNERS AS REQUIRED AT BEAM 'K' REGION.

2. AT INTERSECTING BEAMS USE FULL DEPTH SHEAR TAB PER 5/S5.3.

3. BEARING PLATE WIDTH = BEAM WIDTH OR IF COLUMN IS WIDER THAN BEAM, COLUMN WIDTH +1" MINIMUM.

9 BEAM TO HSS COLUMN CONNECTIONS
SCALE: 1" = 1'-0" (05050M)

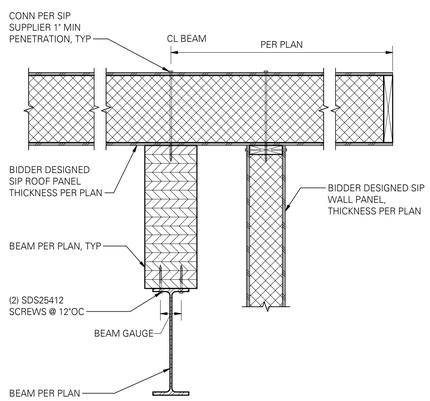

NOTE:
AT SIMILAR CONDITION, NO STEEL BEAM.

10 SIP ROOF PANEL TO BEAM CONNECTION
SCALE: 1" = 1'-0"

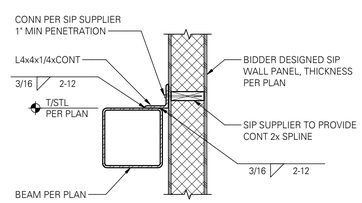

11 SIP CONNECTION AT GARAGE DOOR
SCALE: 1" = 1'-0"

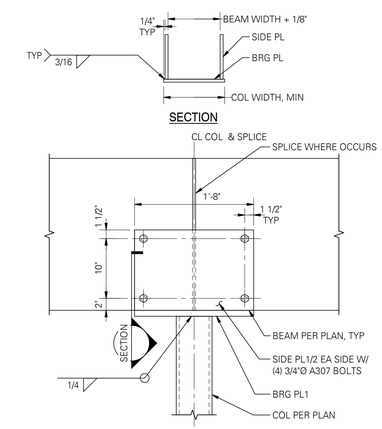

12 TYPICAL BEAM SADDLE AT STEEL COLUMN
SCALE: 1" = 1'-0" (06200M)

DCI ENGINEERS®
707 W 2nd Avenue
Spokane, Washington 99201
P: (509) 455-4448 www.dci-engineers.com
CIVIL / STRUCTURAL

© Copyright 02.2023 DiNardo Conversano Inc. All Rights Reserved
Reproduction or distribution of these drawings or specifications without the written consent of DiNardo Conversano Inc. is prohibited. Unauthorized use of such, without written permission from DiNardo Conversano Inc. is a violation of applicable state and federal laws and is subject to prosecution.

FOR PERMIT
The Contractor shall not use these drawings for construction until Contractor receives written approval for use in construction by the authority having jurisdiction and DCI Engineers.

MILLER STAUFFER ARCHITECTS
601 E. FRONT AVE., STE 201
COEUR D' ALENE, IDAHO 83814
P 208.664.1773 F 208.667.3174
WWW.MILLERSTAUFFER.COM

FRAMING DETAILS

Permit Set
02-17-2023

Powell Sta. Maintenance
Highway 12
Powell Station, Idaho

No.	Description	Date

PROJECT # 22041-0174
PRINCIPAL JBC
PROJECT MANAGER VAV

S5.3

2/17/2023 12:37:43 PM \\dci-fs-share\Revit_Users\hancock_localrevit\STRUCT-22041-0174-R2023_Justin.Hancock.rvt

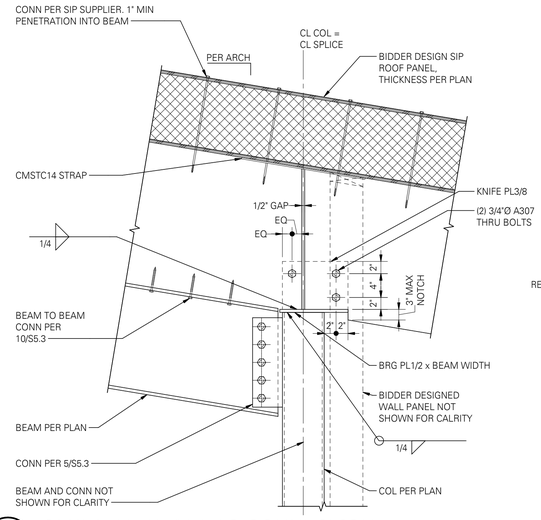

1 GLULAM BEAM DRAG CONNECTION

SCALE: 1" = 1'-0"

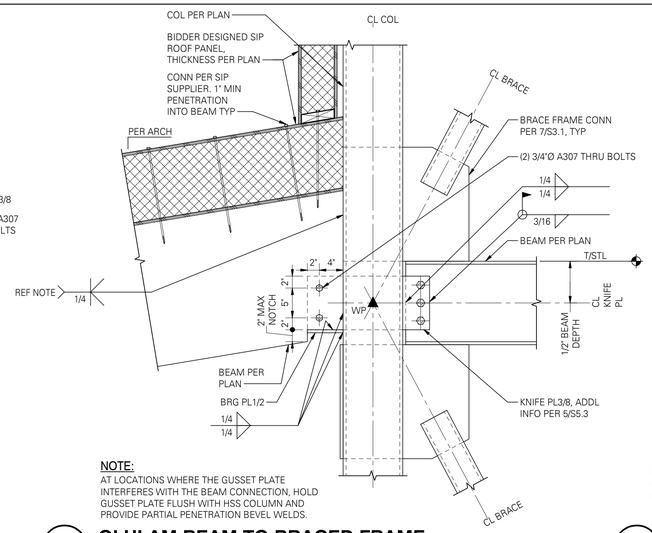

NOTE:
AT LOCATIONS WHERE THE GUSSET PLATE INTERFERES WITH THE BEAM CONNECTION, HOLD GUSSET PLATE FLUSH WITH HSS COLUMN AND PROVIDE PARTIAL PENETRATION BEVEL WELDS.

2 GLULAM BEAM TO BRACED FRAME

SCALE: 1" = 1'-0"

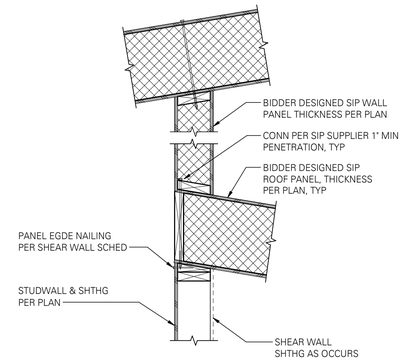

NOTE:
WHERE BEAM BREAKS SIP TOP PLATE, STRAP AS REQUIRED PER SIP SUPPLIER

3 SIP ROOF PANEL AT SHEAR WALL

SCALE: 1" = 1'-0"

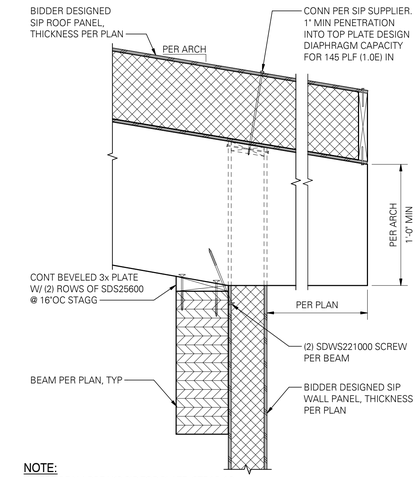

NOTE:
WHERE BEAM BREAKS SIP TOP PLATE, STRAP AS REQUIRED PER SIP SUPPLIER

4 BEAM AT SIP ROOF PANEL

SCALE: 1" = 1'-0"

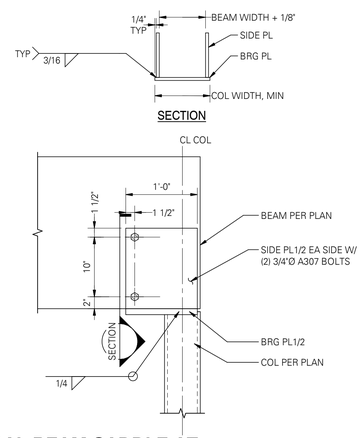

6 TYPICAL BEAM SADDLE AT BEAM END - STEEL COLUMN

SCALE: 1" = 1'-0" (06201M)

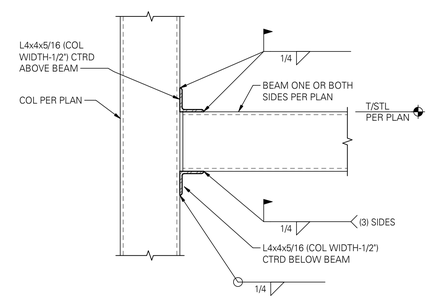

7 HSS BEAM TO COLUMN CONNECTION

SCALE: 1" = 1'-0"

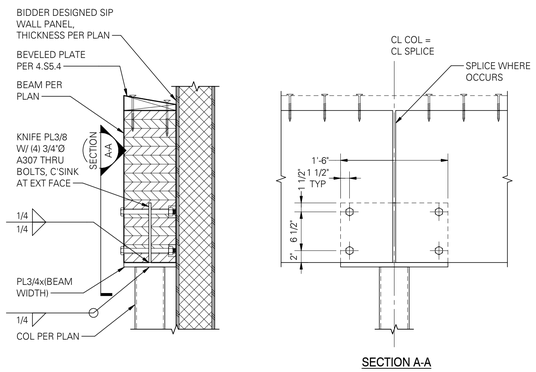

NOTE:
BEAM ABOVE NOT SHOWN FOR CLARITY.
ADDITIONAL INFORMATION PER 4/S5.4.

8 BEAM KNIFE PLATE AT STEEL COLUMN

SCALE: 1" = 1'-0"

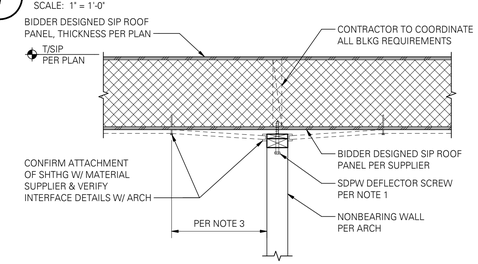

WALL PERPENDICULAR AT ROOF FRAMING

NOTES:
1. CONTRACTOR TO REFERENCE SDPW DEFLECTOR SCREW SPECIFICATIONS IN REGARDS TO PRODUCT TYPE AT 1x AND 2x TOP PLATES OR (2) 2x TOP PLATES. FOR 1x AND 2x TOP PLATES A MAXIMUM SPACING EQUALS 42"OC AND FOR (2) 2x TOP PLATES A MAXIMUM SPACING EQUALS 48"OC. SDPW DEFLECTOR SCREWS MUST BE PLACED AT MINIMUM 6" FROM EACH END OF WALL. INSTALL WITH 3/4" OFFSET BELOW BOTTOM OF PLATE AND HEAD OF SDPW DEFLECTOR SCREW.

2. DCI ENGINEERS IS ONLY RESPONSIBLE FOR THE POSITIVE CONNECTION (SDPW DEFLECTOR SCREW) FROM THE NONBEARING WALL TO THE PRIMARY STRUCTURE. THE CONTRACTOR IS TO CONFIRM THE ATTACHMENT OF THE CEILING SHEATHING TO THE NONBEARING WALL WITH THE SUB-CONTRACTOR PERFORMING THE FRAMING, THE ARCHITECT, THE MATERIAL SUPPLIER, AND THE ACOUSTICAL CONSULTANT AS THERE ARE VARIOUS CONSIDERATIONS INCLUDING MATERIAL ATTACHMENT SPECIFICATIONS, PREFERENTIAL FRAMING TECHNIQUES BY THE SUB-CONTRACTOR, FIRE RATING AND ACOUSTICAL CAULKING REQUIREMENTS, AND NONBEARING WALL FINISH INTERFACE REQUIREMENTS. ALL OF WHICH ARE OUTSIDE OF DCI ENGINEERS EXPERTISE.

3. 16" MINIMUM, 24" MAXIMUM. CONFIRM SPACING OF CONNECTION WITH MATERIAL SUPPLIER, MATERIAL SUPPLIER TO ACCOUNT FOR MOVEMENT OF STRUCTURE.

4. 1x TOP PLATE CAN BE REMOVED GIVEN THE GAP IS 1/2" MAXIMUM.

11 NON-STRUCTURAL PARTITION WALL CONNECTION

SCALE: 1" = 1'-0" (06905M)

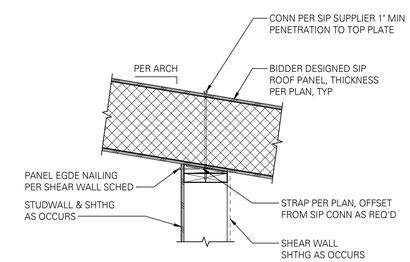

12 SIP ROOF PANEL AT SHEAR WALL

SCALE: 1" = 1'-0"

DCI ENGINEERS®
707 W 2nd Avenue
Spokane, Washington 99201
P: (509) 455-4448 www.dci-engineers.com
CIVIL / STRUCTURAL
© Copyright 02.2023 DiNardo Connerstro Inc. All Rights Reserved
These drawings and specifications are the property of DCI Engineers and shall not be reproduced in part, without written permission from DiNardo Connerstro Inc.
Reproduction of these drawings and specifications without written permission is prohibited and will be prosecuted to the fullest extent of the law.

FOR PERMIT
The Contractor shall not use these drawings for construction until Contractor receives written approval for use in construction by the authority having jurisdiction and DCI Engineers.

MILLER STAUFFER ARCHITECTS
601 E. FRONT AVE., STE 201
COEUR D' ALENE, IDAHO 83814
P 208.664.1773 F 208.667.3174
WWW.MILLERSTAUFFER.COM

FRAMING DETAILS

Permit Set

02-17-2023

Powell Sta. Maintenance
Highway 12
Powell Station, Idaho

No.	Description	Date

PROJECT # 22041-0174
PRINCIPAL JBC
PROJECT MANAGER VAV

S5.4

2/17/2023 12:37:52 PM \\dci-sl-share\Revit_Users\jhancock_localrevit\STRUCT-22041-0174-R2023_Justin.Hancock.rvt

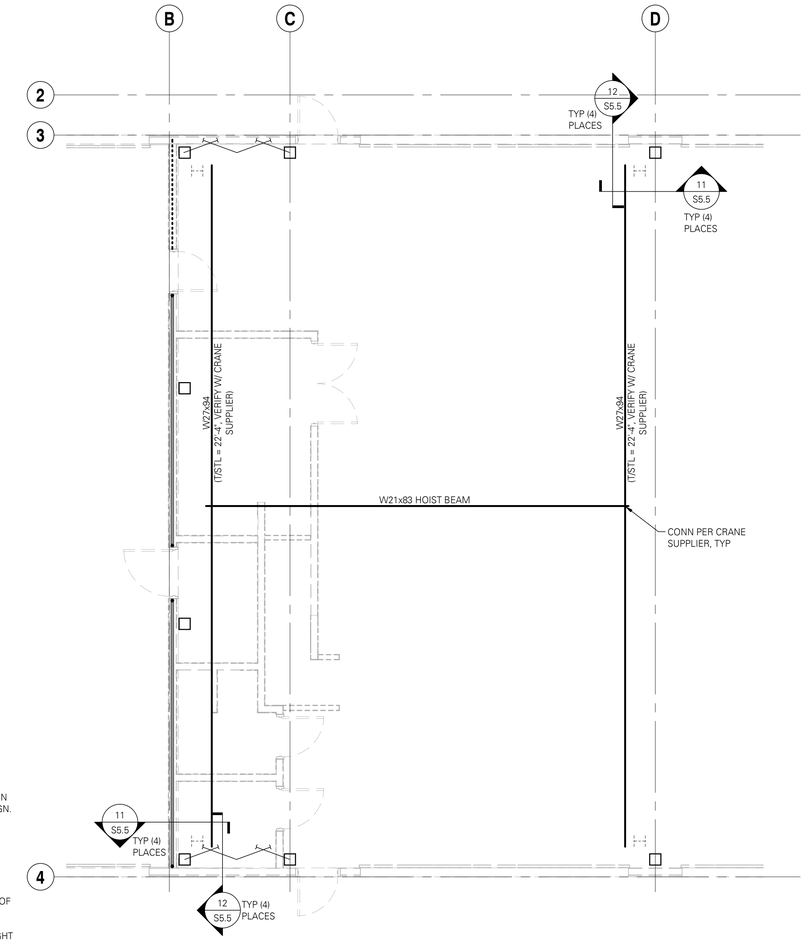

NOTES:

1. CRANE STRUCTURE DESIGN USES L.K. GOODWIN CO. CRANE OR EQUIVALENT AS BASIS OF DESIGN.
2. STRUCTURE DESIGNED FOR MAXIMUM 5-TON CRANE LOAD.
3. DESIGN ASSUMES 4'-6" WHEEL-TO-WHEEL DEISTANCE FOR MOTORIZED END TRUCK.
4. DESIGN ASSUMES BRIDGE MAXIMUM WEIGHT OF 10,000 LBS.
5. DESIGN ASSUMES END TRUCK MAXIMUM WEIGHT OF 1,500 LBS.
6. DESIGN USES HOIST BEAM SIZE DESIGN PER L.K. GOODWIN CO.

7 OPERABLE CRANE FRAMING PLAN

SCALE: 3/16" = 1'-0"

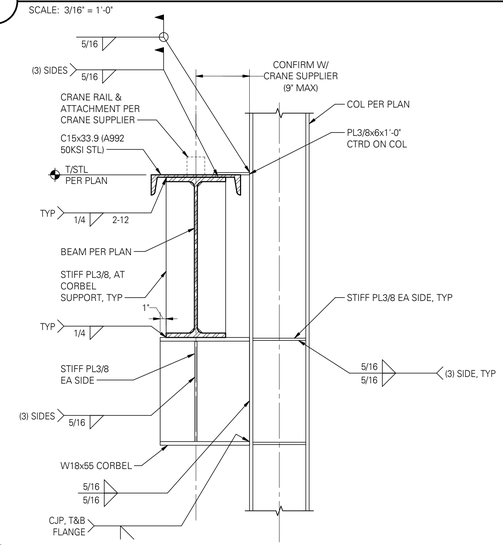

11 CRANE CORBEL DETAIL

SCALE: 1" = 1'-0"

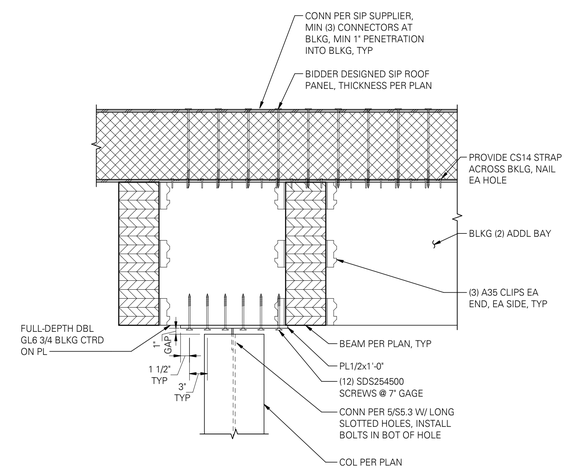

12 CRANE COLUNM AT ROOF

SCALE: 1" = 1'-0"

DCI ENGINEERS®
707 W 2nd Avenue
Spokane, Washington 99201
P: (509) 455-4448
www.dci-engineers.com
CIVIL / STRUCTURAL

© Copyright 02.2023 DiNardo Conversano Inc. All Rights Reserved
Reproduction or use of this drawing or any part thereof without written consent of DiNardo Conversano Inc. is prohibited.

FOR PERMIT
The Contractor shall not use these drawings for construction until Contractor receives written approval for use in construction by the authority having jurisdiction and DCI Engineers.

MILLER STAUFFER ARCHITECTS

601 E. FRONT AVE. STE 201
COEUR D' ALENE, IDAHO 83814
P 208.664.1773 F 208.667.3174
WWW.MILLERSTAUFFER.COM

FRAMING DETAILS

Permit Set

02-17-2023

Powell Sta. Maintenance

Highway 12
Powell Station, Idaho

No.	Description	Date

PROJECT # 22041-0174
PRINCIPAL JBC
PROJECT MANAGER VAV

S5.5

2/17/2023 12:37:59 PM \\dci-it-share\Revit_Users\hancock_local\revit\STRUCT-22041-0174-R2023_Justin.Hancock.rvt

MECHANICAL ABBREVIATIONS

A/C or AC	AIR CONDITIONING	KW	KILOWATT
AFF	ABOVE FINISHED FLOOR	KWH	KILOWATT HOUR
AHU	AIR HANDLING UNIT		
ASHRAE	AMERICAN SOCIETY OF HEATING, REFRIGERATION, AND AIR CONDITIONING ENGINEERS	LAT	LEAVING AIR TEMPERATURE
		LAV	LAVATORY
BTU	BRITISH THERMAL UNITS	LEED	LEADERSHIP IN ENERGY AND ENVIRONMENTAL DESIGN
BTUH	BTUS PER HOUR	LWT	LEAVING WATER TEMPERATURE
CA	COMBUSTION AIR	MAX	MAXIMUM
CC	COOLING COIL	MCA	MINIMUM CIRCUIT AMPS
CFM	AIR FLOW RATE (CUBIC FEET PER MINUTE)	MOCP	MAXIMUM OVERCURRENT PROTECTION
CHWR	CHILLED WATER RETURN	MIN	MINIMUM
CHWS	CHILLED WATER SUPPLY		
CLG	CEILING	NC	NOISE CRITERIA
CW	COLD WATER	NFPA	NATIONAL FIRE PROTECTION ASSOCIATION
		NTS	NOT TO SCALE
DEG or °	DEGREE		
DIA or Ø	DIAMETER	OSA	OUTSIDE AIR
DB	DRY BULB		
		PD	PRESSURE DROP
EA	EXHAUST AIR	PH or Ø	PHASE
EAT	ENTERING AIR TEMPERATURE	PRV	PRESSURE REDUCING VALVE
EER	ENERGY EFFICIENCY RATIO		
ESP	EXTERNAL STATIC PRESSURE	RA	RETURN AIR
EWT	ENTERING WATER TEMPERATURE	RPM	REVOLUTIONS PER MINUTE
		RTU	ROOFTOP UNIT
FCO	FLOOR CLEANOUT		
FD	FIRE DAMPER	SA	SUPPLY AIR
FLA	FULL LOAD AMPS	SEER	SEASONAL ENERGY EFFICIENCY RATIO
FLR	FLOOR	SFD	COMBINATION SMOKE/FIRE DAMPER
FPM	FEET PER MINUTE	SP	STATIC PRESSURE
FT	FEET	SYM	SYMBOL
GA	GAUGE	T & P	TEMPERATURE AND PRESSURE
GCO	GRADE CLEANOUT	TEMP	TEMPERATURE
GPM	WATER FLOW RATE (GALLONS PER MINUTE)	TYP	TYPICAL
HC	HEATING COIL	UMC	UNIFORM MECHANICAL CODE
HP	HORSE POWER	UPC	UNIFORM PLUMBING CODE
HVAC	HEATING, VENTILATING, AIR CONDITIONING	URL	URINAL
HW	HOT WATER		
HWR	HOT WATER RETURN	VTR	VENT THROUGH ROOF
HWS	HOT WATER SUPPLY	V	VOLTS
IBC	INTERNATIONAL BUILDING CODE	W/	WITH
IEEC	INTERNATIONAL ENERGY CONSERVATION CODE	WB	WET-BULB
IFC	INTERNATIONAL FIRE CODE	WC	WATER CLOSET
IFGC	INTERNATIONAL FUEL GAS CODE	WCO	WALL CLEANOUT
IMC	INTERNATIONAL MECHANICAL CODE	WH	WATER HEATER
IPC	INTERNATIONAL PLUMBING CODE		
NOTE:	THIS IS A STANDARD LIST OF COMMONLY USED MECHANICAL ABBREVIATIONS. SOME OF THE ABBREVIATIONS SHOWN ABOVE MAY NOT BE USED IN THIS DRAWING PACKAGE.		

MECHANICAL GENERAL NOTES

1. ALL MECHANICAL EQUIPMENT AND SYSTEMS SHALL BE INSTALLED IN ACCORDANCE WITH THE INTERNATIONAL MECHANICAL CODE (IMC) LATEST EDITION, AND ALL APPLICABLE LOCAL AND STATE CODES.
2. ALL PLUMBING EQUIPMENT AND SYSTEMS SHALL BE INSTALLED IN ACCORDANCE WITH THE LATEST ADOPTED PLUMBING CODE, AND ALL LOCAL AND STATE CODES.
3. ALL MECHANICAL AND PLUMBING EQUIPMENT SHALL BE INSTALLED PER THE MANUFACTURER'S RECOMMENDATIONS.
4. MECHANICAL CONTRACTORS SHALL RECEIVE PRIOR APPROVAL FROM THE STRUCTURAL ENGINEER BEFORE MAKING CUTS THROUGH ANY STRUCTURAL MEMBER.
5. MECHANICAL CONTRACTORS SHALL COORDINATE INSTALLATION WITH CONSTRUCTION SUPERVISOR AND WITH ALL OTHER TRADES TO AVOID CONFLICTS.
6. THE MECHANICAL CONTRACTORS SHALL VERIFY MOTOR VOLTAGES WITH THE ELECTRICAL DRAWINGS PRIOR TO ORDERING MOTORIZED EQUIPMENT AND CONTROLS.
7. SEE MECHANICAL SCHEDULE SHEET FOR SCHEDULED CAPACITIES OF ALL MECHANICAL EQUIPMENT AND MATERIALS SPECIFIED.
8. DOMESTIC WATER SERVICE IS PROVIDED WITH A DOUBLE-CHECK BACKFLOW PREVENTER ASSEMBLY.
9. THE PLUMBING CONTRACTOR IS RESPONSIBLE FOR ALL BACKFLOW DEVICES TO INSPECTED BY A CERTIFIED BACKFLOW TECHNICIAN BEFORE THE USE OF THE BUILDING POTABLE WATER SYSTEM.
10. ALL MECHANICAL EQUIPMENT TO BE PROPOSED MUST BE ON THE APPROVED LIST PRIOR TO SUBMITTALS. ALL APPROVED MANUFACTURERS MUST BE CAPABLE OF MEETING THE REQUIREMENTS OF THE SPECIFIED EQUIPMENT.
11. RUNOUT AND HOOKUP SIZES TO INDIVIDUAL PLUMBING FIXTURES CAN BE FOUND ON THE PLUMBING FIXTURE SCHEDULE.
12. PROVIDE REMOTE CEILING ACCESS BALANCE DAMPERS WITH CONCEALED CHROME PLATE COVERS FOR BALANCE DAMPERS LOCATED ABOVE HARD CEILINGS.
13. PAINT VTR'S, FLUES, EXHAUST CAPS, AND OTHER MECHANICAL ITEMS ON THE ROOF TO MATCH THE ROOF COLOR.
14. INSULATED FLEXIBLE DUCTWORK--IN LENGTHS OF 6'-0" OR LESS--MAY BE USED FOR RUNOUTS TO AIR TERMINALS.
15. MAINTAIN MINIMUM 10'-0" DISTANCE BETWEEN ALL FRESH AIR INTAKES AND EXHAUST OR GAS FLUE DISCHARGES.
16. LOCATE ACCESS HATCHES SO AS TO PROVIDE OPTIMUM SERVICEABILITY TO EQUIPMENT AND/OR VALVING. SEE ARCHITECTURAL SPECIFICATION FOR TYPE AND COLOR. COORDINATE LOCATION WITH ARCHITECTURAL, STRUCTURAL, AND LIGHTING.
17. WHENEVER THERE IS A DISCREPANCY BETWEEN THE RUNOUT DUCT SIZE SHOWN ON THE PLANS AND THAT SHOWN IN THE SCHEDULE, ALWAYS USE THE LARGER OF THE TWO DUCT SIZES.

MECHANICAL AND PLUMBING DRAWINGS LEGEND

	FLEXIBLE DUCTWORK		THREE WAY CONTROL VALVE
	DUCTWORK		TWO WAY CONTROL VALVE
	DUCTWORK BREAK		PRESSURE REDUCING VALVE
	DUCTWORK OR PIPING RISE		GATE VALVE
	CONCENTRIC SQUARE TO ROUND TRANSITION		REDUCER
M	MOTORIZED DAMPER		GLOBE VALVE
	MANUAL VOLUME DAMPER		BALL VALVE
AIRFLOW	SPIN-IN FITTING W/ AIR EXTRACTOR AND HAND DAMPER		BUTTERFLY VALVE
AIRFLOW	HIGH EFFICIENCY FITTING W/ HAND DAMPER		BALANCE VALVE
$	SWITCH		CHECK VALVE
T	THERMOSTAT	FCO	FLOOR CLEANOUT
H	HUMIDISTAT	WCO	WALL CLEANOUT
S	TEMPERATURE SENSOR	GCO	GRADE CLEANOUT
CO2	CARBON DIOXIDE SENSOR		WATER HAMMER ARRESTOR
CO	CARBON MONOXIDE SENSOR		FLOOR DRAIN
NO	NITROUS OXIDE SENSOR		FLOOR SINK
SD	DUCT SMOKE DETECTOR		GAS PRESSURE REGULATOR W/ GAS COCK
	COMBINATION SMOKE/FIRE DAMPER		PRESSURE RELIEF VALVE
	FIRE DAMPER		VENT-THROUGH-ROOF
	SMOKE DAMPER		VENT
#	EQUIPMENT CALLOUT		SOIL, WASTE, OR SANITARY SEWER
	TURNING VANES	AW	ACID WASTE LINE
	INTAKE OR EXHAUST	AV	ACID VENT LINE
	DIRECTION OF AIRFLOW	SD	STORM DRAIN
R-X X"Ø	SUPPLY DIFFUSER	RD	ROOF DRAIN LINE
R-X X"Ø	RETURN GRILLE	OD	OVERFLOW DRAIN LINE
R-X CFM X"Ø	EXHAUST GRILLE	CD	CONDENSATE DRAIN LINE
R-X CFM X"Ø	FLOOR GRILLE		DOMESTIC COLD WATER (CW)
	CEILING EXHAUST FAN		DOMESTIC HOT WATER (HW)
	TEMPERATURE GAUGE		DOMESTIC HOT WATER RETURN (HWR)
	PRESSURE GAUGE (LIQUID FILLED W/ ISOLATION VALVE)	TW	TEMPERED WATER (TW)
TS	TEMPERATURE SENSOR (DUCT OR PIPING)	MPG	MEDIUM PRESSURE NATURAL GAS
FS	FLOW SWITCH	G	LOW PRESSURE NATURAL GAS
	STAINLESS STEEL BRAIDED FLEX CONNECTION	F	FIRE SPRINKLER LINE
	ELASTOMETRIC FLEX CONNECTOR	GWS	GEOTHERMAL WATER SUPPLY
	SUCTION DIFFUSER	GWR	GEOTHERMAL WATER RETURN
	Y TYPE STRAINER (1-1/2" OR LARGER PROVIDED W/ BLOW DOWN VALVE)	CWS	CHILLED WATER SUPPLY
	FLOW DIRECTION	CWR	CHILLED WATER RETURN
	DEMOLITION / EQUIPMENT TO BE REMOVED	CS	CONDENSER WATER SUPPLY
	NEW TO EXISTING CONNECTION POINT	CR	CONDENSER WATER RETURN
(E)	EXISTING	HWS	HEATING WATER SUPPLY
(F)	FUTURE	HWR	HEATING WATER RETURN
(N)	NEW	L	LIQUID REFRIGERANT LINE
	REDUCED PRESSURE BACKFLOW PREVENTER	S	SUCTION REFRIGERANT LINE
	DOUBLE CHECK BACKFLOW PREVENTER		SLOPE PIPE IN DIRECTION OF ARROW
	UNION		PIPE ANCHOR
	AIR VENT		PIPE GUIDE
	TRIPLE DUTY VALVE		CAP
NOTE:	THIS IS A LIST OF COMMONLY USED MECHANICAL AND PLUMBING SYMBOLS. SOME OF THE SYMBOLS SHOWN ABOVE MAY NOT BE USED IN THIS DRAWING PACKAGE.		

ENERGY CODE COMPLIANCE

A. COMPLIANCE WITH THE LATEST ADOPTED EDITION OF THE INTERNATIONAL ENERGY CONSERVATION CODE IS REQUIRED FOR THIS PROJECT. THESE NOTES COVER MANDATORY REQUIREMENTS OF THE CODE. ADDITIONAL REQUIREMENTS ARE NOTED ON THE DRAWINGS AND IN THE SPECIFICATIONS.

B. MINIMUM REQUIREMENTS FOR SUPPLY AND RETURN DUCTWORK INSULATION:

1. R-6: DUCTS LOCATED IN UNCONDITIONED SPACES (SPACE NEITHER HEATED NOR COOLED SUCH AS ABOVE CEILING SPACES, WALL SPACES, DUCT CHASES, SOFFITS, ATTICS, CRAWL SPACES, UNHEATED BASEMENTS, AND UNHEATED GARAGES).
2. R-12: DUCTS LOCATED OUTSIDE OF THE BUILDING'S INSULATION ENVELOPE (SUCH AS ABOVE THE ATTIC INSULATION).

TYPICAL INSULATION THICKNESS REQUIRED TO MEET THESE REQUIREMENTS:

1. FIBERGLASS DUCT WRAP: R-6, R-12.
2. FIBERGLASS DUCT LINER: R-6, R-12.

C. CONTRACTOR SHALL VERIFY THE R-VALUES OF THE ACTUAL INSULATION USED WITH THE MANUFACTURER. R-VALUES SHALL BE INSTALLED VALUES.

D. WHERE DUCTS USED FOR COOLING ARE EXTERNALLY INSULATED, THE INSULATION SHALL BE COVERED WITH A VAPOR RETARDER HAVING A MAXIMUM PERMEANCE OF 0.05 PERM OR ALUMINUM FOIL HAVING A MINIMUM THICKNESS OF 2 MILS. INSULATION HAVING A PERMEANCE OF 0.05 PERMS OR LESS SHALL NOT BE REQUIRED TO BE COVERED. ALL JOINTS AND SEAMS SHALL BE SEALED TO MAINTAIN THE CONTINUITY OF THE VAPOR RETARDER.

E. ALL DUCT JOINTS, SEAMS, AND CONNECTIONS SHALL BE FASTENED AND SEALED WITH WELDS, GASKETS, ADHESIVES, MASTIC-PLUS-EMBEDDED-FABRIC SYSTEMS, OR TAPES. TAPES AND MASTICS SHALL BE LISTED AND LABELED PER UL181A OR UL181B. DUCT TAPE IS NOT PERMITTED AS A SEALANT ON ANY METAL DUCTS. DUCT CONNECTIONS TO FLANGES OR EQUIPMENT SHALL BE SEALED AND MECHANICALLY FASTENED.

F. MINIMUM REQUIREMENTS (THICKNESS) FOR PIPING INSULATION SHALL BE AS FOLLOWS:

FLUID	NOMINAL PIPE DIAMETER 1/2" TO < 1-1/2"	1-1/2" TO < 4"	4" AND ABOVE
1. REFRIGERANT	SEE SPECIFICATIONS		

THE ABOVE INSULATION IS BASED ON HAVING A CONDUCTIVITY NOT EXCEEDING 0.27 BTU-INCH/HOUR-FT2-°F.

G. DOMESTIC HOT WATER PIPING SYSTEMS SHALL BE INSULATED WITH 1" INSULATION HAVING A CONDUCTIVITY NOT EXCEEDING 0.27 BTU-INCH/HOUR-FT2-°F.

H. DOMESTIC WATER HEATERS WHICH ARE NOT PROVIDED WITH INTEGRAL HEAT TRAPS AND SERVE NONCIRCULATING SYSTEMS SHALL BE PROVIDED WITH HEAT TRAPS ON THE SUPPLY AND DISCHARGE PIPING AT THE WATER HEATER.

I. DOMESTIC HOT WATER SYSTEMS WITH RECIRCULATION PUMPS OR ELECTRIC HEAT TRACE SHALL BE CONTROLLED WITH 7-DAY TIME CLOCKS.

J. AN OPERATING AND MAINTENANCE MANUAL SHALL BE PROVIDED PRIOR TO ISSUANCE OF A CERTIFICATE OF OCCUPANCY. THE O&M MANUAL SHALL CONTAIN THE FOLLOWING INFORMATION AS A MINIMUM:

1. EQUIPMENT CAPACITY (INPUT & OUTPUT).
2. EQUIPMENT OPERATING AND MAINTENANCE INSTRUCTIONS.
3. CONTROL SYSTEM MAINTENANCE AND CALIBRATION INFORMATION, INCLUDING WIRING DIAGRAMS, SCHEMATICS, AND CONTROL SEQUENCES.
4. CONTROL SYSTEM SETPOINTS SHALL BE SHOWN ON CONTROL DRAWINGS, AT CONTROL DEVICES, OR IN PROGRAMMING COMMENT ON DDC SYSTEMS.
5. A COMPLETE WRITTEN NARRATIVE ON HOW EACH MECHANICAL SYSTEM IS INTENDED TO OPERATE.

MECHANICAL COMCHECK

COM*check* Software Version COMcheckWeb

Mechanical Compliance Certificate

Project Information

Energy Code: 2018 IECC
Project Title: ITD Powell Maintenance Facility
Location: Pierce, Idaho
Climate Zone: 5b
Project Type: New Construction

Construction Site: Owner/Agent: Designer/Contractor:

Additional Efficiency Package(s)

Credits: 1.0 Required 0.0 Proposed

Mechanical Systems List

Quantity System Type & Description

1 HP-1 (Unknown):
VRF Condensing Unit, Air Cooled Heat Pump
Heating Mode: Capacity = 19 kBtu/h,
No minimum efficiency requirement applies
Cooling Mode: Capacity = 24 kBtu/h,
No minimum efficiency requirement applies
Fan System: None

1 HP-2 (Unknown):
VRF Condensing Unit, Air Cooled Heat Pump
Heating Mode: Capacity = 38 kBtu/h,
No minimum efficiency requirement applies
Cooling Mode: Capacity = 39 kBtu/h,
No minimum efficiency requirement applies
Fan System: None

1 FC-1.1 (Single Zone):
Heating: 1 each - Other, Electric, Capacity = 13 kBtu/h
No minimum efficiency requirement applies
Cooling: 1 each - VRF Zone Fan Unit, Capacity = 17 kBtu/h, Unknown Economizer
No minimum efficiency requirement applies

1 FC-1.2 (Single Zone):
Heating: 1 each - Other, Electric, Capacity = 5 kBtu/h
No minimum efficiency requirement applies
Cooling: 1 each - VRF Zone Fan Unit, Capacity = 6 kBtu/h, Unknown Economizer
No minimum efficiency requirement applies

1 FC-2.1 (Single Zone):
Heating: 1 each - Other, Electric, Capacity = 6 kBtu/h
No minimum efficiency requirement applies
Cooling: 1 each - VRF Zone Fan Unit, Capacity = 7 kBtu/h, Unknown Economizer
No minimum efficiency requirement applies

1 FC-2.2 (Single Zone):
Heating: 1 each - Other, Electric, Capacity = 17 kBtu/h
No minimum efficiency requirement applies
Cooling: 1 each - VRF Zone Fan Unit, Capacity = 15 kBtu/h, Unknown Economizer
No minimum efficiency requirement applies

1 FC-2.3 (Single Zone):
Heating: 1 each - Other, Electric, Capacity = 13 kBtu/h
No minimum efficiency requirement applies

Quantity System Type & Description

Cooling: 1 each - VRF Zone Fan Unit, Capacity = 12 kBtu/h, Unknown Economizer
No minimum efficiency requirement applies

1 FC-3 / HP-3 (Single Zone):
Split System Heat Pump
Heating Mode: Capacity = 10 kBtu/h,
Proposed Efficiency = 10.00 HSPF, Required Efficiency = 8.20 HSPF
Cooling Mode: Capacity = 13 kBtu/h,
Proposed Efficiency = 22.00 SEER, Required Efficiency = 14.00 SEER
Proposed Part Load Efficiency = 0.00 , Required Part Load Efficiency = 0.00

Mechanical Compliance Statement

Compliance Statement: The proposed mechanical design represented in this document is consistent with the building plans, specifications, and other calculations submitted with this permit application. The proposed mechanical systems have been designed to meet the 2018 IECC requirements in COMcheck Version COMcheckWeb and to comply with any applicable mandatory requirements listed in the Inspection Checklist.

Chris Dyke, PE — Name - Title
Christopher Dyke — Signature
2/7/2023 — Date

PROFESSIONAL ENGINEER LICENSED 16683 2/10/2023 STATE OF IDAHO CHRISTOPHER DYKE

MUSGROVE ENGINEERING, P.A.
234 S. Whisperwood Way
Boise, ID 83709
208.384.0585
645 West 25th Street
Idaho Falls, ID 83402
208.523.2862
www.musgrovepa.com
PROJECT NO. 22-455

MILLER STAUFFER ARCHITECTS
601 E. FRONT AVE., STE 201
COEUR D' ALENE, IDAHO 83814
P 208.664.1773 F 208.667.3174
WWW.MILLERSTAUFFER.COM

MECHANICAL COVER SHEET
Preliminary
10-6-2022

Powell Station Maintenance Facility
Highway 12
Powell Station, Idaho

LICENSED ARCHITECT AR-1050 MONTE J. MILLER STATE OF IDAHO

No.	Description	Date

PROJECT NUMBER 2206
PRINCIPAL Designer
PROJECT MANAGER Author

M0.0

2/10/2023 5:00:17 PM Autodesk Docs://ITD Powell Maintenance Facility/22-455 ITD POWELL STATION MAINTENANCE MEP r23.rvt

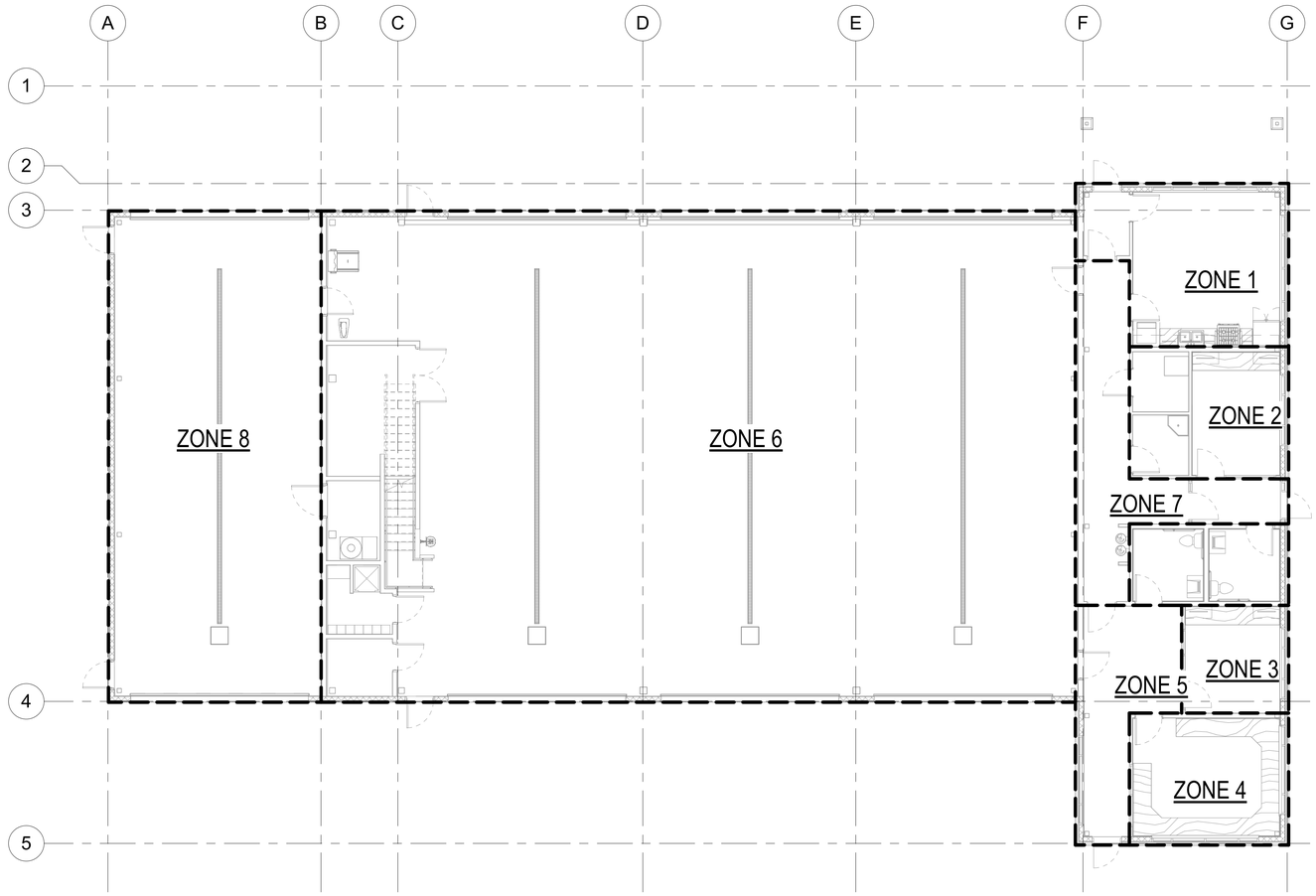

Mechanical Zone Plan

1/8" = 1'-0"

MECHANICAL ZONE LOAD CALCULATIONS

MUSGROVE ENGINEERING, PA

234 S. WHISPERWOOD WAY BOISE, IDAHO 83709

Zone Summary

PROJECT:	*ITD Powell Maintenance Building*			Design Conditions		Winter	-10	Summer	93.1			
COMPUTED BY:	*CD*				DATE:	7-Feb-23	CHK BY:	TN				
			Heating Load		Sensible Cooling Load	Total Cooling Load						Unit Selection Size
	Zone Reference	FLOOR SQ. FT.	BTUH	kW	BTUH	BTUH	NOMINAL TON (12000-BTUH/TON)	SQ. FT PER NOMINAL TON	NUMBER OF PEOPLE	OSA	EXHAUST	TONS
1	Break Room 111	289	12,251	4	14,555	17,360	1.4	199.8	10	84	0	FC-1 highwall ductless
2	State Patrol Office 109	138	4,766	1	5,980	6,822	0.6	242.7	3	29	0	FC-2 highwall ductless
3	Supervisors Office 103	131	4,524	1	5,901	6,742	0.6	233.2	3	29	0	FC-3 highwall ductless
4	Watch Room 102	222	10,568	3	14,030	15,152	1.3	175.8	4	42	0	FC-4 highwall ductless
5	Lobby 101	206	9,283	3	11,303	12,144	1.0	203.6	3	34	0	FC-5 ducted
6	Bay 1-2-3	4138.5	200,504	59	46,098	46,098	3.8	1077.3	0	259	207	-
7	Hallway 106	226	3,049	1	1,010	1,010	0.1	2685.2	0	17	0	FC-5 ducted
8	Truck Wash 123	1260	52,292	15	9,706	9,706	0.8	1557.7	0	79	63	-
	Total Loads =	**6610.5**	**297,237**	**87**	**108,582**	**115,033**	**9.6**	**690**	**23**	**572**	**270**	

Energy Compliance Calculations *(Not Equipment Schedule)*

Equipment is selected based on next available size

MUSGROVE ENGINEERING, P.A.
234 S. Whisperwood Way
Boise, ID 83709
208.384.0585
645 West 25th Street
Idaho Falls, ID 83402
208.523.2862
www.musgrovepa.com

PROJECT NO. 22-455

MILLER STAUFFER ARCHITECTS
601 E. FRONT AVE., STE 201
COEUR D' ALENE, IDAHO 83814
P 208.664.1773 F 208.667.3174
WWW.MILLERSTAUFFER.COM

MECHANICAL ZONE PLAN

Preliminary

10-6-2022

Powell Station Maintenance Facility

Highway 12
Powell Station, Idaho

LICENSED ARCHITECT AR-1050
MONTE J. MILLER
STATE OF IDAHO

PROFESSIONAL ENGINEER
LICENSED
16683
2/10/2023
STATE OF IDAHO
CHRISTOPHER DYKE

No.	Description	Date

PROJECT NUMBER 2206
PRINCIPAL Designer
PROJECT MANAGER Author

MO.1

2/10/2023 5:00:19 PM Autodesk Docs://ITD Powell Maintenance Facility/22-455 ITD POWELL STATION MAINTENANCE MEP r23.rvt

MUSGROVE ENGINEERING, P.A.
234 S. Whisperwood Way
Boise, ID 83709
208.384.0585
645 West 25th Street
Idaho Falls, ID 83402
208.523.2862
www.musgrovepa.com
PROJECT NO. 22-455

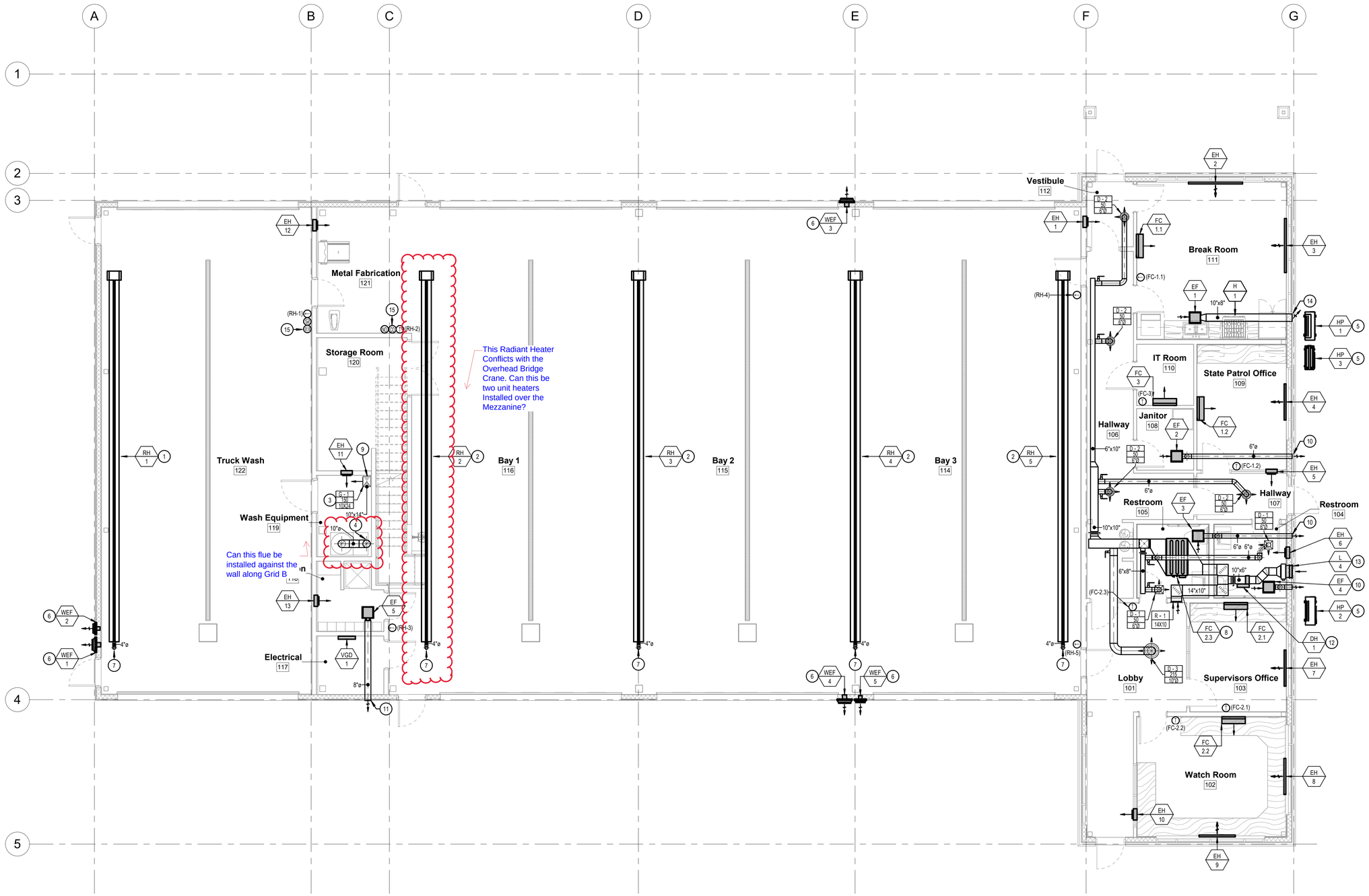

HVAC Plan

3/16" = 1'-0"

KEYED NOTES:

(#) SYMBOL USED FOR CALLOUT

1. INSTALL RADIANT HEATER 13' A.F.F. COORDINATE FINAL INSTALLATION WITH ALL OTHER TRADES. MAINTAIN ALL MANUFACTURER CLEARANCE REQUIREMENTS.
2. INSTALL RADIANT HEATER 16' A.F.F. COORDINATE FINAL INSTALLATION WITH ALL OTHER TRADES. MAINTAIN ALL MANUFACTURER CLEARANCE REQUIREMENTS.
3. INSTALL SUPPLY GRILLE 6" A.F.F.
4. ROUTE 10" FLUE UP THROUGH CEILING. SEE SHEET M2.0 FOR CONTINUATION.
5. INSTALL OUTDOOR HEAT PUMP WITH MIRO STAND ON TOP OF 4" CONCRETE HOUSEKEEPING PAD. SEE DETAIL #2 ON SHEET M2.0 FOR INSTALLATION REQUIREMENTS.
6. INSTALL WALL PROPELLER EXHAUST FAN 12' A.F.F. COORDINATE FINAL INSTALLATION WITH ALL OTHER TRADES.
7. ROUTE 4" FLUE UP TO ROOF. PROVIDE WITH ROOF TERMINATION KIT AND SEAL PENETRATION.
8. INSTALL FAN COIL UNIT IN MEZZANINE ABOVE MAINTAIN ALL MANUFACTURER CLEARANCE REQUIREMENTS.
9. ROUTE 14"X10" SUPPLY DUCT UP THROUGH CEILING. SEE SHEET M2.0 FOR CONTINUATION.
10. PROVIDE WITH WALL TERMINATION CAP AT 14'-0" A.F.F. SEAL WALL PENETRATION.
11. PROVIDE WITH WALL TERMINATION CAP AT 11'-6" A.F.F. SEAL WALL PENETRATION.
12. INSTALL INLINE DUCT HEATER IN MEZZANINE ABOVE. MAINTAIN ALL MANUFACTURER CLEARANCE REQUIREMENTS.
13. INSTALL LOUVER 10'-6" A.F.F. SEAL WALL PENETRATION
14. PROVIDE WITH WALL TERMINATION CAP AT 12'-6". SEAL WALL PENETRATION.
15. WALL MOUNTED CARBON MONOXIDE AND NITROGEN DIOXIDE SENSOR (ONE SENSOR WITH CO & NO2 CAPABILITY).

MILLER STAUFFER ARCHITECTS
601 E. FRONT AVE., STE 201
COEUR D' ALENE, IDAHO 83814
P 208.664.1773 F 208.667.3174
WWW.MILLERSTAUFFER.COM

MECHANICAL FLOOR PLAN

Preliminary
10-6-2022

Powell Station Maintenance Facility
Highway 12
Powell Station, Idaho

LICENSED ARCHITECT AR-1050 MONTE J. MILLER STATE OF IDAHO

PROFESSIONAL ENGINEER LICENSED 16683 2/10/2023 STATE OF IDAHO CHRISTOPHER DYKE

No.	Description	Date

PROJECT NUMBER 2206
PRINCIPAL Designer
PROJECT MANAGER Author

M1.0

2/10/2023 5:00:22 PM Autodesk Docs://ITD Powell Maintenance Facility/22-455 ITD POWELL STATION MAINTENANCE MEP r23.rvt

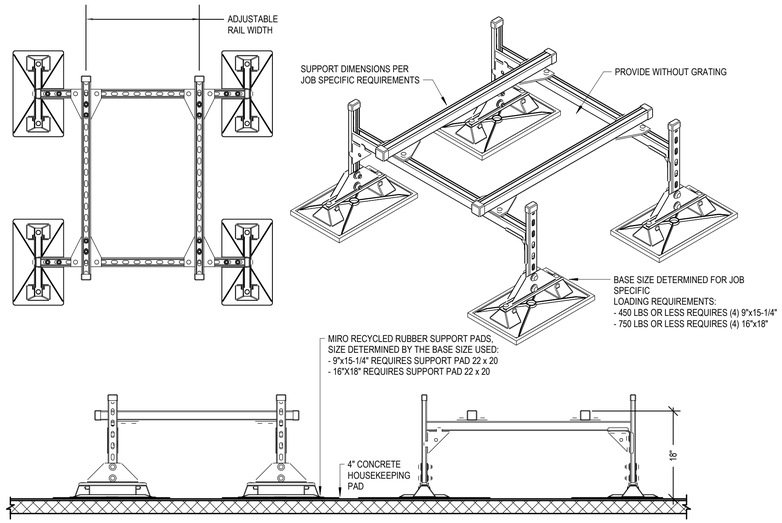

NOTES:

1. PROVIDE WITH MIRO INDUSTRIES MODEL HD, HEAVY DUTY MECHANICAL GALVANIZED SUPPORT WITH ADJUSTABLE SUPPORT LEGS AND RAIL WIDTH
2. BOLT EQUIPMENT TO MECHANICAL SUPPORT, A MINIMUM OF (4) LOCATIONS
3. APPROVED ALTERNATE MANUFACTURERS: UNISTRUT AND ROOF-PRO

1 ROOFTOP HEAT PUMP PLATFORM DETAIL
NTS

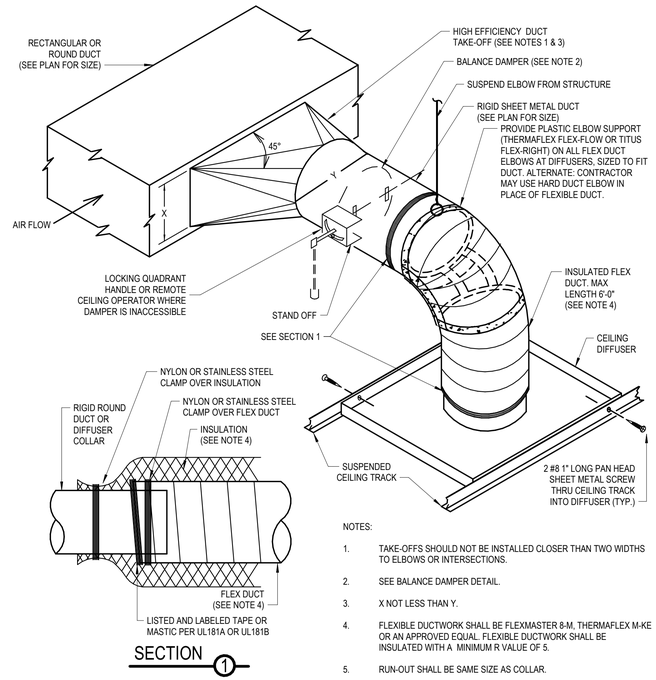

NOTES:

1. TAKE-OFFS SHOULD NOT BE INSTALLED CLOSER THAN TWO WIDTHS TO ELBOWS OR INTERSECTIONS.
2. SEE BALANCE DAMPER DETAIL.
3. X NOT LESS THAN Y.
4. FLEXIBLE DUCTWORK SHALL BE FLEXMASTER 8-M, THERMAFLEX M-KE OR AN APPROVED EQUAL. FLEXIBLE DUCTWORK SHALL BE INSULATED WITH A MINIMUM R VALUE OF 5.
5. RUN-OUT SHALL BE SAME SIZE AS COLLAR.

2 DUCT TAKEOFF DETAIL - HIGH EFFICIENT
NTS

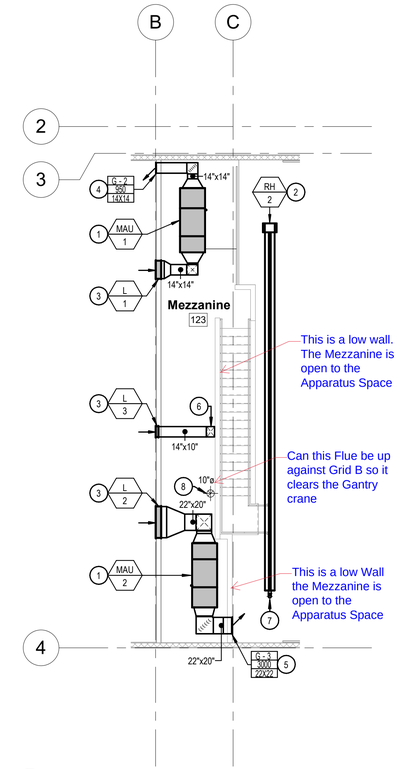

Mezzanine HVAC Plan
1/8" = 1'-0"

KEYED NOTES:

(#) SYMBOL USED FOR CALLOUT

1. INSTALL MAKEUP AIR UNIT ON 4" CONCRETE PAD. MAINTAIN ALL MANUFACTURER CLEARANCE REQUIREMENTS.
2. INSTALL RADIANT HEATER 16' A.F.F. COORDINATE FINAL INSTALLATION WITH ALL OTHER TRADES. MAINTAIN ALL MANUFACTURER CLEARANCE REQUIREMENTS.
3. INSTALL LOUVER 28' A.F.F. SEAL WALL PENETRATION.
4. INSTALL SUPPLY GRILLE 12' A.F.F. PROVIDE WITH 45DEG ANGLED LOUVERS.
5. INSTALL SUPPLY GRILLE 13'-6" A.F.F. PROVIDE WITH 45DEG ANGLED LOUVERS.
6. ROUTE 14"X10" SUPPYL DUCT DOWN TO FLOOR BELOW. SEE SHEET M1.0 FOR CONTINUATION.
7. ROUTE 4" FLUE UP TO ROOF. PROVIDE WITH ROOF TERMINATION KIT AND SEAL PENETRATION.
8. ROUTE 10" FLUE UP TO ROOF FROM FLOOR BELOW. PROVIDE WITH ROOF TERMINATION KIT AND SEAL PENETRATION. SEE SHEET M1.0 FOR CONTINUATION.

PROFESSIONAL ENGINEER
LICENSED
Christopher Dyke
16683
2/10/2023
STATE OF IDAHO
CHRISTOPHER DYKE

MUSGROVE ENGINEERING, P.A.
234 S. Whisperwood Way
Boise, ID 83709
208.384.0585
645 West 25th Street
Idaho Falls, ID 83402
208.523.2862
www.musgrovepa.com
PROJECT NO. 22-455

MILLER STAUFFER ARCHITECTS
601 E. FRONT AVE., STE 201
COEUR D' ALENE, IDAHO 83814
P 208.664.1773 F 208.667.3174
WWW.MILLERSTAUFFER.COM

LICENSED ARCHITECT
AR-1050
MONTE J. MILLER
STATE OF IDAHO

Powell Station Maintenance Facility
Highway 12
Powell Station, Idaho

MEZZANINE MECHANICAL PLAN & DETAILS
Preliminary
10-6-2022

No.	Description	Date

PROJECT NUMBER 2206
PRINCIPAL Designer
PROJECT MANAGER Author

M2.0

2/10/2023 5:00:23 PM Autodesk Docs://ITD Powell Maintenance Facility/22-455 ITD POWELL STATION MAINTENANCE MEP /23.rvt

MUSGROVE
ENGINEERING, P.A.
234 S. Whisperwood Way
Boise, ID 83709
208.384.0585
645 West 25th Street
Idaho Falls, ID 83402
208.523.2862
www.musgrovepa.com
PROJECT NO. 22-455

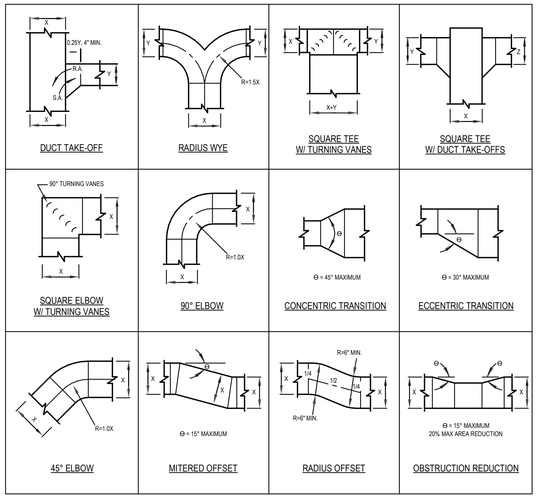

NOTE:
ALL DUCTWORK TRANSITIONS SHALL BE CONSTRUCTED AND INSTALLED TO SMACNA, SPECIFICATIONS AND THE ABOVE NOTED STANDARDS. ANY DEVIATIONS SHALL BE COORDINATED WITH THE ENGINEER.

1 RECTANGULAR DUCT FITTING DETAILS
NTS

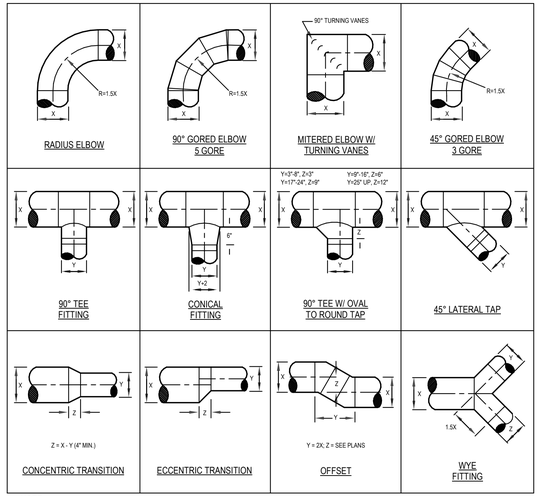

NOTE:
ALL DUCTWORK TRANSITIONS SHALL BE CONSTRUCTED AND INSTALLED TO SMACNA, SPECIFICATIONS, AND THE ABOVE NOTED STANDARDS. ANY DEVIATIONS SHALL BE COORDINATED WITH THE ENGINEER.

2 ROUND DUCT FITTING DETAILS
NTS

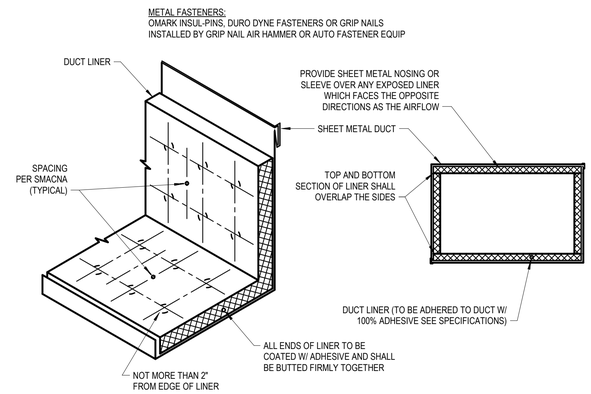

3 DUCT LINER DETAIL
NTS

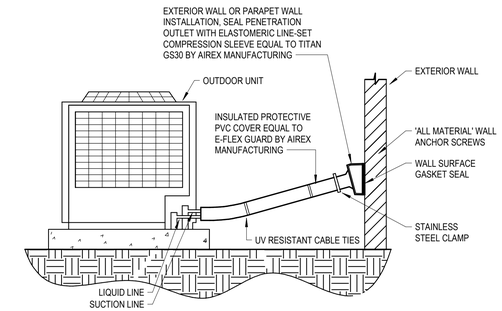

4 REFRIGERANT PIPING DETAIL
NTS

NOTES:

1. FOR TAKE-OFFS LARGER THAN 12" DIAMETER, USE A FACTORY MANUFACTURED DAMPER. LOUVERS & DAMPERS, INC. MODEL CD-600 WITH A LOCKING HAND QUADRANT OR EQUAL.
2. ROD CONTINUOUS ON 2" W.G. CLASS AND ON ALL DAMPERS OVER 12" DIAMETER.
3. BLADE 22 GAGE MIN., BUT NOT LESS THAN TWO GAGES MORE THAN THE DUCT GAGE.
4. PROVIDE REMOTE CEILING OPERATOR WHERE DAMPER IS INACCESSIBLE.
5. FOR DUCTS OVER 12" HIGH USE MULTIPLE BLADE DAMPERS (SEE FIG. C).
6. ALTERNATE MANUFACTURERS INCLUDE: AMERICAN WARMING, SAFE-AIR/DOWCO, J&J, LOUVERS & DAMPERS, RUSKIN, NAILOR, ARROW UNITED, POTTORFF, & CESCO.

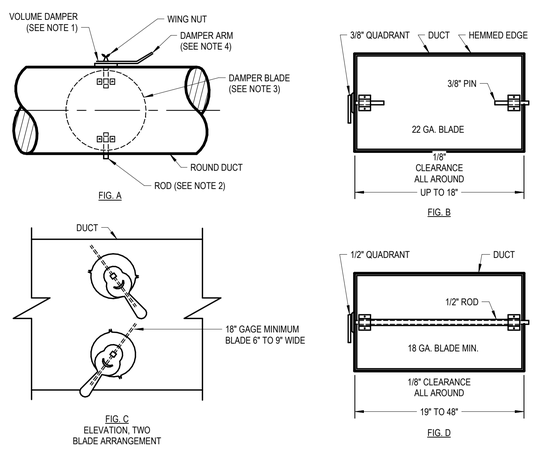

5 BALANCE DAMPER DETAIL
NTS

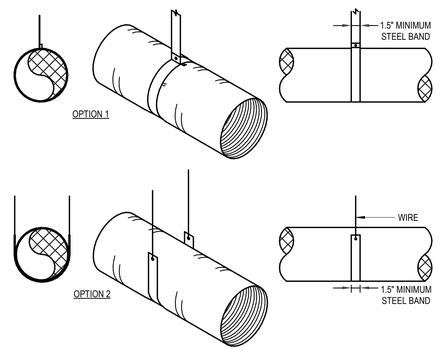

NOTES:

1. SUPPORT SYSTEM SHALL NOT DAMAGE, CRIMP, OR INHIBIT DUCT FREE AREA IN ANY WAY.
2. FLEXIBLE DUCT MUST NOT EXCEED 6'-0" FROM CONNECTION TO TERMINATION.
3. MAXIMUM LENGTH BETWEEN SUPPORTS MUST NOT EXCEED 3'-0" ON CENTER.
4. ATTACH BANDS OR WIRES TO SUPPORT STRUCTURE ABOVE.
5. FLEXIBLE DUCTWORK SHALL BE FLEXMASTER 1-M OR APPROVED EQUAL.
6. FLEXIBLE DUCTWORK SHALL BE INSULATED WITH A MINIMUM R-VALUE OF 5.0.
7. FLEXIBLE DUCTWORK IS FOR INDOOR USE ONLY. DO NOT INSTALL OR STORE PRODUCT WHERE EXPOSURE TO DIRECT SUNLIGHT CAN OCCUR. PROLONGED EXPOSURE TO SUNLIGHT MAY CAUSE DETERIORATION OF VAPOR BARRIER.
8. TERMINAL DEVICES SHALL BE SUPPORTED INDEPENDENTLY OF THE FLEXIBLE DUCTWORK.
9. REPAIR TURN OR DAMAGED VAPOR BARRIER/JACKET WITH DUCT TAPE LISTED AND LABELED TO UL 181B. IF INTERNAL CORE IS PENETRATED, REPLACE FLEXIBLE DUCTWORK.
10. AVOID BENDING DUCT ACROSS SHARP CORNERS OR INCIDENTAL CONTACT WITH METAL FIXTURES, PIPES, OR CONDUITS.
11. FLEXIBLE DUCTWORK SHALL NOT BE INSTALLED WITHIN 4 INCHES OF HOT EQUIPMENT (FURNACES, BOILERS, STEAM PIPES, ETC.) THAT IS ABOVE 250°F.
12. FLEXIBLE DUCTWORK SHALL NOT BE INSTALLED IN CONCRETE, BURIED BELOW GRADE, OR IN CONTACT WITH THE GROUND.
13. DO NOT INSTALL FLEXIBLE DUCTWORK IN EXPOSED CEILING AREA.

6 FLEXIBLE DUCT SUPPORT DETAIL
NTS

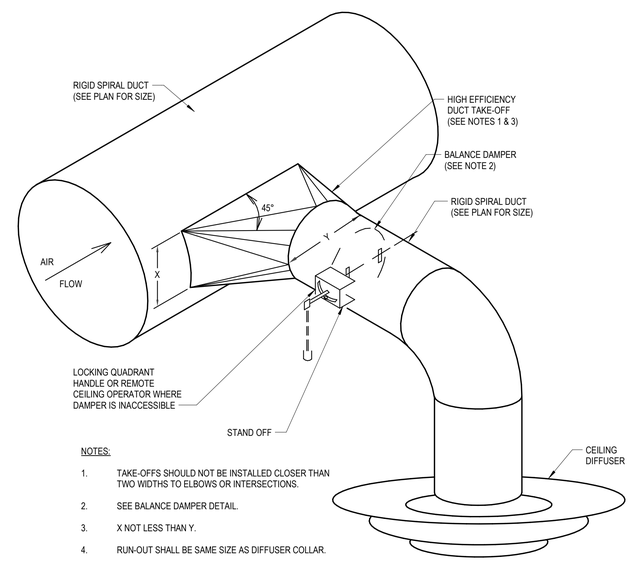

NOTES:

1. TAKE-OFFS SHOULD NOT BE INSTALLED CLOSER THAN TWO WIDTHS TO ELBOWS OR INTERSECTIONS.
2. SEE BALANCE DAMPER DETAIL.
3. X NOT LESS THAN Y.
4. RUN-OUT SHALL BE SAME SIZE AS DIFFUSER COLLAR.

7 DUCT TAKEOFF DETAIL - SPIRAL DUCT
NTS

PROFESSIONAL ENGINEER
LICENSED
Christopher Dykes
16683
2/10/2023
STATE OF IDAHO
CHRISTOPHER DYKES

MILLER STAUFFER ARCHITECTS
601 E. FRONT AVE., STE 201
COEUR D' ALENE, IDAHO 83814
P 208.664.1773 F 208.667.3174
WWW.MILLERSTAUFFER.COM

MECHANICAL DETAILS
Preliminary
10-6-2022

Powell Station Maintenance Facility
Highway 12
Powell Station, Idaho

LICENSED ARCHITECT
AR-1050
MONTE J. MILLER
STATE OF IDAHO

No.	Description	Date

PROJECT NUMBER 2206
PRINCIPAL Designer
PROJECT MANAGER Author

M2.1

2/10/2023 5:00:24 PM Autodesk Docs://ITD Powell Maintenance Facility/22-455 ITD POWELL STATION MAINTENANCE MEP /23.rvt

RADIANT HEATER SCHEDULE

SYMBOL	AREA SERVED	TYPE	TUBE LENGTH (FT)	MOUNTING HEIGHT (FT)	CLEARANCE TO COMBUSTIBLES			ELECTRICAL		NATURAL GAS	OPERATING WEIGHT (LBS)	MANUFACTURER AND MODEL	REMARKS
					TOP (in)	BELOW (in)	SIDE (in)	AMPS	V/Ø	INPUT MBH			
RH-1	TRUCK WASH 123	SINGLE STAGE LOW INTENSITY INFRARED	41'-0"	17'-0"	6"	60"	29"	1.1	120/1	75.0	250	RE-VERBER-RAY MODEL DX2-SS-40-75	1 , 2 , 4 , 5
RH-2	BAY 1	SINGLE STAGE LOW INTENSITY INFRARED	41'-0"	17'-0"	6"	60"	29"	1.1	120/1	75.0	200	RE-VERBER-RAY MODEL DES3-40-75	1 , 3 , 4 , 6
RH-3	BAY 2	SINGLE STAGE LOW INTENSITY INFRARED	41'-0"	17'-0"	6"	60"	9"	1.1	120/1	75.0	200	RE-VERBER-RAY MODEL DES3-40-75	1 , 3 , 4 , 6
RH-4	BAY 2	SINGLE STAGE LOW INTENSITY INFRARED	41'-0"	17'-0"	6"	60"	9"	1.1	120/1	75.0	200	RE-VERBER-RAY MODEL DES3-40-75	1 , 3 , 4 , 6
RH-5	BAY 3	SINGLE STAGE LOW INTENSITY INFRARED	41'-0"	17'-0"	6"	60"	29"	1.1	120/1	75.0	200	RE-VERBER-RAY MODEL DES3-40-75	1 , 3 , 4 , 5

REMARKS:

1. APPROVED ALTERNATE MANUFACTURERS: CO-RAY-VAC, SPACE-RAY, CALCANA, AND MODINE.
2. PROVIDE WALL MOUNTED THERMOSTAT WITH RAIN-TIGHT ENCLOSURE (MODEL #TH-115).
3. PROVIDE WALL MOUNTED PROGRAMMABLE THERMOSTAT (MODEL #TH-P721).
4. PROVIDE WITH ROOF VENT PACKAGE, LP CONVERSION KIT, STAINLESS STEEL BURNER BOX, COMBUSTION TUBES AND RADIANT TUBES, HANGING SUPPORTS, AND WATER RESISTANT CIRCUITRY.
5. 0° MOUNTING ANGLE WITH 1 SIDE SHIELD
6. 0° MOUNTING ANGLE.

DUCTLESS MULTI-SPLIT SYSTEM HEAT PUMP UNIT SCHEDULE

OUTDOOR HEAT PUMP UNITS

SYMBOL	AREA SERVED	NOMINAL TONS	UNIT TYPE	COOLING REQUIRED AT 93.1°F OAT, 75°F RAT		HEATING REQUIRED AT -10°F OAT, 70°F RAT	ELECTRICAL			MINIMUM EER (CLG / HTG)	OPERATING WEIGHT (LBS)	MANUFACTURER AND MODEL	REMARKS
				TOTAL MBH	SENSIBLE MBH	TOTAL MBH	MCA	MOCP	V/Ø				
HP-1	FC-1.1 & FC-1.2	2.0	HEAT PUMP	24.3	24.3	19.2	19.6	30.0	240/1	16.3 / 8.7	160	LG ARUN024GSS4	1 , 2 , 4 , 6 , 7
HP-2	FC-2.1, FC-2.2, & FC-2.3	4.0	HEAT PUMP	39.1	39.1	38.1	24.0	40.0	240/1	14.4 / 10.0	265	LG MODEL ARUM048GSS5	1 , 2 , 4 , 6 , 7

INDOOR FAN COIL UNITS

HEAT PUMP SYMBOL	FAN COIL SYMBOL	AREA SERVED	NOMINAL TONS	UNIT TYPE	SUPPLY FAN	COOLING	HEATING	ELECTRICAL			OSA (CFM)	SOUND (dB)	OPERATING WEIGHT (LBS)	MANUFACTURER AND MODEL	REMARKS
					CFM	MBH	MBH	MCA	MOCP	V/Ø					
HP-1	FC-1.1	BREAK ROOM 111	1.5	HIGH WALL	495	17.4	13.8	THROUGH OUTDOOR UNIT			85	---	27	LG ARNU183SKA4	1 , 3 , 5 , 6 , 7
	FC-1.2	STATE PATROL OFFICE 109	0.5	HIGH WALL	255	6.8	5.4	THROUGH OUTDOOR UNIT			30	---	20	LG ARNU073SJA4	1 , 3 , 5 , 6 , 7
HP-2	FC-2.1	SUPERVISORS OFFICE 103	0.5	HIGH WALL	255	7.0	6.8	THROUGH OUTDOOR UNIT			30	---	20	LG ARNU073SJA4	1 , 3 , 5 , 6 , 7
	FC-2.2	WATCH ROOM 102	1.5	HIGH WALL	495	15.4	17.1	THROUGH OUTDOOR UNIT			45	---	30	LG ARNU183SKA4	1 , 3 , 5 , 6 , 7
	FC-2.3	LOBBY 101	1.25	DUCTED	515	12.3	13.6	THROUGH OUTDOOR UNIT			35	---	85	LG ARNU153M2A4	1 , 3 , 5 , 6 , 7

REMARKS:

1. APPROVED ALTERNATE MANUFACTURERS: LENNOX, MITSUBISHI, SAMSUNG, DAIKIN, & CARRIER.
2. PROVIDE MANUFACTURER'S CRANKCASE HEATER, LOW AMBIENT CONTROLS (TO -10°F), WIND BAFFLES, REFRIGERATION LINE SET AND TEES, SIZED BY MANUFACTURER, AND TAMPER PROOF PORT CAPS.
3. CONTROL UNIT WITH MANUFACTURER'S HARD-WIRED WALL MOUNTED 7 DAY PROGRAMMABLE THERMOSTAT, 5 DEGREE DEADBAND WITH AUTO CHANGEOVER. THERMOSTAT SHALL ALSO INCLUDE CONTROL OF AUXILIARY HEAT RELAY. SEE CONTROL SCHEMATIC FOR SEQUENCE OF OPERATION.
4. INSTALL OUTDOOR UNIT ON 4" CONCRETE PLATFORM WITH MIRO STAND MODEL HD (SEE DETAIL FOR REQUIREMENTS). ELECTRICAL TO PROVIDE HEAT TAPE UNDERNEATH UNIT.
5. PROVIDE WITH LITTLE GIANT MINI CONDENSATE PUMP. CONCEAL PUMP BEHIND UNIT WITHIN MOUNTING BRACKET ASSEMBLY.
6. ELECTRICAL TO PROVIDE DISCONNECT.
7. SEE CONTROL DRAWINGS FOR SEQUENCE OF OPERATION.

LOUVER SCHEDULE

SYMBOL	SERVICE	TYPE	NOMINAL SIZE	MINIMUM FREE AREA (SQ.FT.)	FINISH	MANUFACTURER AND MODEL	REMARKS
L-1	OUTSIDE AIR INTAKE	FIXED DRAINABLE	24" X 24"	1.94	AAMA 2604	RUSKIN ELF375DX	1 , 2 , 3
L-2	OUTSIDE AIR INTAKE	FIXED DRAINABLE	42" X 38"	5.79	AAMA2604	RUSKIN ELF375DX	1 , 2 , 4
L-3	COMBUSTION AIR FOR HOTSY	FIXED DRAINABLE	14" X 14"	1.36	AAMA2604	RUSKIN ELF375DX	1 , 2 , 5
L-4	OUTSIDE AIR INTAKE	FIXED DRAINABLE	16" X 14"	1.60	AAMA2604	RUSKIN ELF375DX	1 , 2 , 6

REMARKS:

1. APPROVED ALTERNATE MANUFACTURERS: GREENHECK, ARROW UNITED, NCA MANUFACTURING, NAILOR, AND UNITED ENERTECH.
2. COLOR TO BE SELECTED BY ARCHITECT.
3. PROVIDE WITH FLANGED FRAME AND BIRD SCREEN AND 120V/Ø LOW LEAKAGE MOTORIZED DAMPER. INTERLOCK WITH WEF-1 & MAU-1.
4. PROVIDE WITH FLANGED FRAME AND BIRD SCREEN AND 120V/Ø LOW LEAKAGE MOTORIZED DAMPER. INTERLOCK WITH WEF-3, WEF-4 , & MAU-2.
5. PROVIDE WITH FLANGED FRAME AND BIRD SCREEN.
6. PROVIDE WITH FLANGED FRAME AND BIRD SCREEN AND 120V/Ø LOW LEAKAGE MOTORIZED DAMPER. INTERLOCK WITH DUCT HEATER DH-1.

ELECTRIC DUCT HEATER SCHEDULE

SYMBOL	AREA SERVED	UNIT TYPE	DUCT SIZE		TEMPERATURE (°F)		CFM RANGE			AIRFLOW (CFM)	MANUFACTURER AND MODEL	REMARKS
			WIDTH	HEIGHT	INLET	OUTLET	KW	V/Ø	STEPS			
DH-1	FAN COIL UNIT INTAKE (FC-2.3)	DUCT-FLANGED OPEN COIL	10"	6"	-10	70.0	5.0	240/1	1.0	200	HEATREX PUB	1 , 2 , 3

REMARKS:

1. APPROVED ALTERNATE MANUFACTURERS: MARKEL, INDEECO, AND BRASCH.
2. PROVIDE WITH MAGNETIC DE-ENERGIZING CONTACTORS, AUTOMATIC LIMIT THERMOSTAT, FUSED DISCONNECT, AIR PRESSURE SENSOR SWITCH, CONTROL TRANSFORMER, SCR CONTROLS AND INSULATED CONTROL BOX.
3. INTERLOCK WITH FC-2.3 SUPPLY FAN USING AUXILIARY RELAY. SEE CONTROL DRAWINGS FOR SEQUENCE OF OPERATION.

EXHAUST FAN SCHEDULE

SYMBOL	AREA SERVED	UNIT TYPE	BLOWER				ELECTRICAL		MAXIMUM SONES	OPERATING WEIGHT (LBS)	MANUFACTURER AND MODEL	REMARKS
			CFM	ESP	MAXIMUM RPM	DRIVE	HP/W	V/Ø				
EF-1	BREAK ROOM 111	CEILING CABINET	150	.375	1160	DIRECT	57.7 W	115/1	3.5	15	COOK MODEL GC-186	1 , 2 , 3
EF-2	JANITOR 108	CEILING CABINET	100	.375	1,075	DIRECT	46.5 W	115/1	2.5	15.0	COOK MODEL GC-148	1 , 2 , 4
EF-3	RESTROOM 105	CEILING CABINET	100	.375	1,075	DIRECT	46.5 W	115/1	2.5	15.0	COOK MODEL GC-148	1 , 2 , 4
EF-4	RESTROOM 104	CEILING CABINET	100	.375	1,075	DIRECT	46.5 W	115/1	2.5	15.0	COOK MODEL GC-148	1 , 2 , 4
EF-5	DECON 118	CEILING CABINET	150	.375	1160	DIRECT	57.7 W	115/1	3.5	15	COOK MODEL GC-186	1 , 2 , 4

REMARKS:

1. APPROVED ALTERNATE MANUFACTURERS: ACME, GREENHECK, PENNBARRY, TWIN CITY FAN COMPANY, AND S&P.
2. PROVIDE UNIT WITH MANUFACTURER'S WALL CAP EQUAL TO COOK MODEL WCG (W/ INTEGRAL BIRDSCREEN), BACKDRAFT DAMPER, OUTLET FLEX DUCT CONNECTION, STANDARD PLUG DISCONNECT, PRE-WIRED FAN SPEED CONTROLLER, THERMAL OVERLOAD PROTECTION, HANGING VIBRATION ISOLATORS, AND WHITE ALUMINUM GRILLE
3. CONTROL WITH WALL SWITCH.
4. CONTROL FAN WITH PUSH BUTTON DIGITAL COUNTDOWN TIMER S WITCH WITH 5-15-30 MINUTE AND 1-2-4 HOUR PRESETS.

GARAGE WALL EXHAUST FAN SCHEDULE

SYMBOL	AREA SERVED	UNIT TYPE	BLOWER				ELECTRICAL		MAXIMUM SONES	OPERATING WEIGHT (LBS)	MANUFACTURER AND MODEL	REMARKS
			CFM	ESP	MAXIMUM RPM	DRIVE	HP/W	V/Ø				
WEF-1	TRUCK WASH	WALL PROPELLER	950	0.25	1,550	DIRECT	1/4 HP	115/1	17.2	80	COOK MODEL 14XW20D152	1 , 2 , 3 , 4
WEF-2	TRUCK WASH	WALL PROPELLER	125	0.25	1,725	DIRECT	1/8 HP	115/1	4.7	65	COOK MODEL 10XW28D17	1 , 2 , 6
WEF-3	BAY 1, BAY 2, & BAY 3	WALL PROPELLER	1,550	0.25	1,550	DIRECT	3/4 HP	115/1	12.9	85.0	COOK MODEL 16XW36D152	1 , 2 , 3 , 5
WEF-4	BAY 1, BAY 2, & BAY 3	WALL PROPELLER	1,550	0.25	1,550	DIRECT	3/4 HP	115/1	12.9	85.0	COOK MODEL 16XW36D152	1 , 2 , 3 , 5
WEF-5	BAY 1, BAY 2, & BAY 3	WALL PROPELLER	230	0.25	1,140	DIRECT	16 HP	115/1	7.5	95	COOK MODEL 12XWH26D11	1 , 2 , 6

REMARKS:

1. APPROVED ALTERNATE MANUFACTURERS: ACME, GREENHECK, PENNBARRY, TWIN CITY FAN COMPANY, AND S&P.
2. PROVIDE UNIT WITH MANUFACTURER'S WIREGUARD - MOTORSIDE, WIREGUARD PROP SIDE, WEATHER HOOD MOTORIZED DAMPER, THERMAL OVERLOAD PROTECTION, PRE-WIRED NEMA 3R ELECTRICAL DISCONNECT SWITCH, AND AN INTEGRAL BIRD SCREEN.
3. FAN SHALL BE CONTROLLED THROUGH GARAGE EXHAUST SENSORS. SEE FLOOR PLAN FOR LOCATION AND QUANTITY.
4. FAN SHALL BE INTERLOCKED WITH INTAKE LOUVER L-1 & MAKEUP AIR UNIT MAU-1.
5. FAN SHALL BE INTERLOCKED WITH INTAKE LOUVER L-2 & MAKEUP AIR UNIT MAU-2.
6. FAN SHALL RUN CONTINUOUSLY.

VEHICLE EXHAUST GAS DETECTION SYSTEM SCHEDULE

SYMBOL	AREA SERVED	EXHAUST FAN INTERLOCK	PRODUCT TYPE	GAS DETECTION RANGE		ELECTRICAL		MANUFACTURER AND MODEL	REMARKS
				CO (PPM)	NO2 (PPM)	SENSORS	CONTROL PANEL		
				LOW / HIGH	LOW / HIGH	VOLTS	V / □		
VGD-1	TRUCK WASH & BAYS	ZONE 1: WEF-1 ZONE 2: WEF-3 & WEF-4	MACURCO GAS VENTILATION CONTROL SYSTEM	0-200	0-20	24V	120 / 1	MACURCO CONTROL PANEL MODEL: DVP-120 MACURCO SENSOR MODEL: CX-6	1 , 2 , 3 , 4

REMARKS:

1. APPROVED ALTERNATE MANUFACTURERS: SUBMIT FOR PRIOR APPROVAL.
2. PROVIDE WITH MANUFACTURER'S CONTROL PANEL, (3) 10-AMP RELAYS, (2) HORNS, (2) STROBE DRIVERS, (12) ANALOG (DVP-120). PANEL INCLUDES TIMED DAY SELECTIONS, ALARMS, WARNINGS, AND TROUBLE INDICATIONS.
3. INSTALL MANUFACTURER SENSORS TO COVER ENTIRE SPACE. MANUFACTURER TO SUBMIT SENSOR LAYOUT FOR FINAL APPROVAL.
4. PANEL SHALL CONTROL TWO SEPARATE ZONES. SEE CONTROL SCHEMATIC FOR SEQUENCE OF OPERATION.

PROFESSIONAL ENGINEER
LICENSED
Christopher A. Dyke
16683
2/10/2023
STATE OF IDAHO
CHRISTOPHER DYKE

MUSGROVE ENGINEERING, P.A.
234 S. Whisperwood Way
Boise, ID 83709
208.384.0585
645 West 25th Street
Idaho Falls, ID 83402
208.523.2862
www.musgrovepa.com
PROJECT NO. 22-455

MILLER STAUFFER ARCHITECTS
601 E. FRONT AVE., STE 201
COEUR D' ALENE, IDAHO 83814
P 208.664.1773 F 208.667.3174
WWW.MILLERSTAUFFER.COM

MECHANICAL SCHEDULES

Preliminary
10-6-2022

Powell Station Maintenance Facility
Highway 12
Powell Station, Idaho

LICENSED ARCHITECT AR-1050 MONTE J. MILLER STATE OF IDAHO

No.	Description	Date

PROJECT NUMBER 2206
PRINCIPAL: Designer
PROJECT MANAGER Author

M3.0

2/10/2023 5:00:24 PM Autodesk Docs://ITD Powell Maintenance Facility/22-455 ITD POWELL STATION MAINTENANCE MEP r23.rvt

DUCTLESS SPLIT HIGH WALL COOLING & HEATING UNIT SCHEDULE

SYMBOL	AREA SERVED	NOMINAL TONS	UNIT TYPE	SUPPLY FAN			COOLING REQUIRED AT 93.1°F OAT, 75°F EDB, 62°F EWB		HEATING REQUIRED AT -10°F OAT, 70°F EDB.	ELECTRICAL OUTDOOR UNIT			MINIMUM SEER / HSPF	INDOOR/ OUTDOOR OPERATING WEIGHT (LBS)	MANUFACTURER AND MODEL	REMARKS
				CFM	HP	V/Ø	TOTAL MBH	SENSIBLE MBH	TOTAL MBH	MCA	MOCP	V/Ø				
FC-3 , HP-3	IT ROOM 110	1.0	HIGH WALL COOL/HEAT UNIT	195-459	.027	THROUGH OUTDOOR UNIT	13.8	9.0	10.4	10.0	15.0	230/1	22.0 / 10.0	20 / 75	LG INDOOR UNIT MODEL LSN120HSV5 LG OUTDOOR UNIT MODEL LSU120HSV5	1 , 2 , 3 , 4 , 5 , 6 , 7

REMARKS:

1. APPROVED ALTERNATE MANUFACTURERS: LENNOX, MITSUBISHI, PANASONIC, SAMSUNG, CARRIER, & DAIKIN.
2. CONTROL UNIT WITH MANUFACTURER'S HARD-WIRED WALL MOUNTED 7 DAY PROGRAMMABLE THERMOSTAT WITH AUTO CHANGE OVER.
3. PROVIDE MANUFACTURERS CRANKCASE HEATER, LOW AMBIENT CONTROLS & (TO -10°F COOLING) WIND BAFFLES, REFRIGERATION LINE SET SIZED BY MANUFACTURER, AND TAMPER PROOF PORT CAPS.
4. PROVIDE WITH 4" CONCRETE CURB WITH MIRO STAND MODEL HD.
5. PROVIDE WITH MANUFACTURER'S CONDENSATE PUMP, OR LITTLE GIANT MINI CONDENSATE PUMP. CONCEAL PUMP BEHIND UNIT WITHIN MOUNTING BRACKET ASSEMBLY. ELECTRICAL CIRCUIT FOR PUMP SHALL BE INTEGRATED TO FAN COIL.
6. ELECTRICAL TO PROVIDE DISCONNECT AND HEAT TRACE BENEATH UNIT.
7. SEE CONTROL DRAWINGS FOR SEQUENCE OF OPERATION.

ELECTRIC HEATER SCHEDULE

SYMBOL	AREA SERVED	UNIT TYPE	ELECTRICAL				HEATER LENGTH (IN.)	WEIGHT (LBS.)	MANUFACTURER AND MODEL	REMARKS
			KW	STEPS	V/Ø	AMPS				
EH-1	VESTIBULE 112	RECESSED	1.0	1	120/1	8.3	-	10	MARKEL 3320	1 , 3 , 4
EH-2	BREAK ROOM 111	BASEBOARD	1.5	1	240/1	6.3	72	41	MARKEL 3700 ARCHITECTURAL STYLE	1 , 2
EH-3	BREAK ROOM 111	BASEBOARD	1.5	1	240/1	6.3	72	41	MARKEL 3700 ARCHITECTURAL STYLE	1 , 2
EH-4	STATE PATROL OFFICE 109	BASEBOARD	1.0	1	240/1	4.2	48	31	MARKEL 3700 ARCHITECTURAL STYLE	1 , 2
EH-5	HALLWAY 107	RECESSED	1.0	1	120/1	8.3	-	10	MARKEL 3320	1 , 3 , 4
EH-6	RESTROOM 104	RECESSED	1.0	1	120/1	8.3	-	10	MARKEL 3320	1 , 3 , 4
EH-7	SUPERVISORS OFFICE 103	BASEBOARD	1.0	1	240/1	4.2	48	31	MARKEL 3700 ARCHITECTURAL STYLE	1 , 2
EH-8	WATCH ROOM 102	BASEBOARD	1.0	1	240/1	4.2	48	31	MARKEL 3700 ARCHITECTURAL STYLE	1 , 2
EH-9	WATCH ROOM 102	BASEBOARD	1.0	1	240/1	4.2	48	31	MARKEL 3700 ARCHITECTURAL STYLE	1 , 2
EH-10	LOBBY 101	RECESSED	1.0	1	120/1	8.3	-	10	MARKEL 3320	1 , 3 , 4
EH-11	WASH EQUIPMENT 119	RECESSED	1.5	1	120/1	12.5	-	10	MARKEL 3320	1 , 3 , 4
EH-12	METAL FABRICATION 121	RECESSED	1.5	1	120/1	12.5	-	10	MARKEL 3320	1 , 3 , 4
EH-13	DECON 118	RECESSED	1.5	1	120/1	12.5	-	10	MARKEL 3320	1 , 3 , 4

REMARKS:

1. APPROVED ALTERNATE MANUFACTURERS: BRASCH, QMARK, INDEECO, OUELLET, AND CHROMALOX.
2. CONTROL UNIT WITH MULTIPORT DUCTLESS SPLIT SYSTEM THERMOSTAT. SEE CONTROL DRAWING FOR SEQUENCE OF OPERATION.
3. MOUNT BOTTOM OF HEATER 12" ABOVE FINISH FLOOR.
4. PROVIDE UNIT WITH AN INTEGRAL THERMOSTAT WITH A TAMPER-PROOF ACCESS COVER.

GAS FIRED MAKE-UP AIR UNIT SCHEDULE

SYMBOL	AREA SERVED	TYPE	SUPPLY FAN					ELECTRICAL			GAS HEATING (-10°F OAT, 60°F SAT)			WEIGHT (LBS)	MANUFACTURER AND MODEL	REMARKS
			MIN CFM	MAX CFM	ESP	HP	RPM	V/Ø	MCA	MOCP	INPUT MBH	OUTPUT MBH	TEMP RISE (°F)			
MAU-1	TRUCK WASH 122	INDOORS / DIRECT FIRED	800	950	0.65"	3/4	2,634	230/1	9.3	15.0	70.3	64.7	70	800	GREENHECK DGX-P109-H12-MF	1 , 2 , 3
MAU-2	BAY 1, 2, & 3	INDOORS / DIRECT FIRED	1,275	3,000	0.65"	2.0	1,934	230/1	15.6	25.0	221.9	204.2	70	800	GREENHECK DGX-P115-H12-MF	1 , 2 , 3

REMARKS:

1. APPROVED ALTERNATE MANUFACTURERS: STERLING, HASTINGS, TRANE, AND REZNOR.
2. PROVIDE UNIT WITH E-3 (409) STAINLESS STEEL HEAT EXCHANGER, LP CONVERSION KIT, FILTER RACK AND FILTERS, INSULATED DOWNTURN PLENUM CABINET, 2-POSITION DISCHARGE DAMPER, 100% OSA SCREENED INLET AIR HOOD, INDOOR CURB, TOTALLY ENCLOSED PREMIUM EFFICIENCY MOTORS AND MOTOR STARTER, ELECTRONIC MODULATION WITH DUCTSTAT, FREEZE PROTECTION, AND VFD FOR 2-SPEED OPERATION.
3. SEE EXHAUST CONTROL SCHEMATIC FOR SEQUENCE OF OPERATION.

RESIDENTIAL HOOD SCHEDULE

SYMBOL	AREA SERVED	UNIT TYPE	HOOD DIMENSIONS			EXHAUST AIR			ELECTRICAL		MAXIMUM SONES	MANUFACTURER AND MODEL	REMARKS
			LENGTH	HEIGHT	DEPTH	CFM	MAX S.P.	CONNECTION	V/ø	AMPS			
H-1	BREAK ROOM 111	WALL MOUNTED / DUCTED	36"	6"	19-5/8"	110	0.25	7"□	120/1	0.65	5.0	BROAN HOOD MODEL BWP2364SS	1 , 2 , 3 , 4

REMARKS:

1. APPROVED ALTERNATES: ACCUREX, AND DENLAR.
2. PROVIDE UL 300A COMPLIANT INTEGRAL RANGE LIGHT, BACKDRAFT DAMPER, AND MANUFACTURER'S STEEL ROOF JACK (SLOPED ROOF) EQUAL TO COOK MODEL RJ (W/ FLASHING FLANGE AND BLACK EPOXY FINISH).
3. UNIT TO BE PROVIDED WITH STANDARD LED LIGHTING, OPEN MESH FILTERS.
4. PROVIDE WITH HOOD MOUNTED CONTROLS FOR CONTROL OF LIGHTS AND FAN.

DIFFUSER SCHEDULE

SYMBOL	NOMINAL SIZE	NECK / RUNOUT SIZE	CFM RANGE	REMARKS
D-1 CFM 6"Ø	6X6	6"Ø	0 - 90	1 , 2 , 3 , 4 , 5 , 6 , 7
D-2 CFM 6"Ø	6"Ø	6"Ø	0 - 90	1 , 3 , 5 , 6 , 7 , 8
D-3 CFM 10"Ø	10"Ø	10"Ø	200 - 350	1 , 3 , 5 , 6 , 7 , 8

REMARKS:

1. ALTERNATE MANUFACTURERS: ANEMOSTAT, NAILOR, METAL-AIRE, KRUEGER, PRICE, AND UNITED ENERTECH.
2. SIZES BASED ON TITUS MODEL TDCA SERIES WITH ADJUSTABLE THROW.
3. SIZES BASED ON A MAXIMUM NC LEVEL OF 25.
4. ALL DIFFUSERS LOCATED IN LAY-IN CEILING AREAS SHALL BE BORDER TYPE 3 AND BE MOUNTED IN MANUFACTURER PROVIDED 24"x24" PANELS. ALL DIFFUSERS LOCATED IN HARD CEILING AREAS SHALL BE BORDER TYPE 6 (BEVELED) SURFACE MOUNTED. SEE ARCHITECTURAL PLANS FOR LOCATIONS OF VARIOUS CEILING TYPES.
5. SEE HVAC FLOOR PLANS FOR DIRECTIONAL THROW REQUIREMENTS FOR EACH DIFFUSER.
6. WHENEVER THERE IS A DISCREPANCY BETWEEN THE RUNOUT DUCT SIZE SHOWN ON THE PLANS AND THAT SHOWN IN THE SCHEDULE, ALWAYS USE THE LARGER OF THE TWO DUCT SIZES.
7. COLOR TO BE SELECTED BY ARCHITECT.
8. SIZES BASED ON TITUS MODEL TMRA, TYPE 3, ROUND CEILING DIFFUSER, STEEL CONSTRUCTION.

SUPPLY GRILLE SCHEDULE

SYMBOL	NOMINAL SIZE	NECK / RUNOUT SIZE	CFM RANGE	REMARKS
C-1 CFM SIZE	24X10	24X10	0-150	1 , 2 , 3 , 5
C-2 CFM SIZE	14X14	14X14	0-950	1 , 2 , 4 , 5
C-3 CFM SIZE	22X22	22X22	0-3,000	1 , 2 , 3 , 5

REMARKS:

1. APPROVED MANUFACTURERS: ANEMOSTAT, J&J REGISTER, TUTTLE & BAILEY, NAILOR, METAL-AIRE, KRUEGER, PRICE, AND UNITED ENERTECH.
2. COLOR SELECTED BY ARCHITECT.
3. WALL GRILLE SIZES BASED ON TITUS MODEL 300FL, DOUBLE DEFLECTION ADJUSTABLE BLADES, 3/4" SPACING, WHITE FINISH.
4. WALL GRILLE SIZES BASED ON TITUS MODEL 300RL-SS, DOUBLE DEFLECTION ADJUSTABLE BLADES, 3/4" SPACING, 316 ALLOY STAINLESS STEEL, WHITE FINISH.
5. SIZES BASED ON A MAXIMUM NC LEVEL OF 30.

RETURN & EXHAUST GRILLE SCHEDULE

SYMBOL	NOMINAL SIZE	NECK / RUNOUT SIZE	CFM RANGE	REMARKS
R-1 14X10	14X10	14X10	0-600	1 , 2 , 3 , 4

REMARKS:

1. ALTNERNATE MANUFACTURERS: ANEMOSTAT, CARNES, PRICE, NAILOR, METAL-AIRE, TUTTLE & BAILEY, KRUEGER, J&J REGISTER, AND UNITED ENERTECH.
2. SIZES BASED ON A MAXIMUM NC LEVEL OF 25.
3. COLOR TO BE SELECTED BY ARCHITECT.
4. HIGH WALL GRILLE SIZES BASED ON TITUS MODEL 355 RL, STEEL BAR GRILLE, FIXED BLADES, 1/2" SPACING, 35° DEFLECTION, ADJUSTABLE OPPOSED BLADE DAMPER.

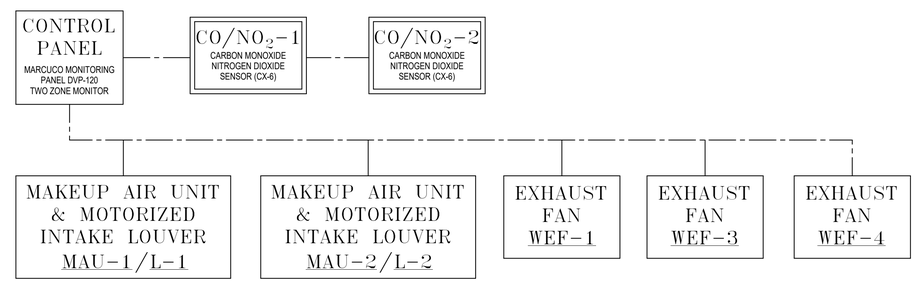

GENERAL
THE VEHICLE EXHAUST SYSTEM SHALL CONSIST OF (2) ZONES WITH (2) MOTORIZED INTAKE LOUVERS, (2) GAS-FIRED MAKEUP AIR UNITS, (2) ZONE CO/NO2 SENSORS, AND A VEHICLE EXHAUST CONTROL PANEL. THE CONTRACTOR SHALL PROVIDE A FULLY OPERABLE EXHAUST SYSTEM CONTROLLING BOTH ZONES INDEPENDENTLY.

ZONE 1 (TRUCK WASH 122)

WHEN CARBON MONOXIDE (CO) LEVELS EXCEED 25 PPM (ADJUSTABLE) OR NITROGEN DIOXIDE (NO) LEVELS EXCEED 1 PPM (ADJUSTABLE), THE VEHICLE GAS DETECTION SYSTEM CONTROL PANEL (VGD-1) SHALL SEQUENCE THE FOLLOWING:

1. SEND AN ENABLE COMMAND TO THE EXHAUST FANS (WEF-1).
2. SEND AN ENABLE COMMAND TO THE INTAKE LOUVER DAMPER (L-1).
3. SEND AN ENABLE COMMAND TO THE MAKEUP AIR UNIT (MAU-1).
   a. THE MAKEUP AIR UNIT CONTROLLER SHALL MODULATE THE SUPPLY FAN TO MAINTAIN A NEGATIVE SPACE PRESSURE OF -0.01" W.C. (ADJUSTABLE).
   b. THE MAKEUP AIR UNIT CONTROLLER SHALL ALSO MODULATE THE GAS VALVE TO MAINTAIN A DISCHARGE AIR TEMPERATURE OF 60°F (ADJUSTABLE).

WHEN CARBON MONOXIDE (CO) LEVELS FALL BELOW 25 PPM AND NITROGEN DIOXIDE (NO) LEVELS FALL BELOW 1 PPM, THE VEHICLE GAS DETECTION SYSTEM CONTROL PANEL (VGD-1) SHALL SEQUENCE THE FOLLOWING:

1. SEND A DISABLE COMMAND TO THE EXHAUST FANS (WEF-1).
2. SEND AN ENABLE COMMAND TO THE MAKEUP AIR UNIT (MAU-1).
3. SEND A DISABLE COMMAND TO THE INTAKE LOUVER DAMPER (L-1).

ZONE 2 (BAY 1, BAY 2, & BAY 3)

WHEN CARBON MONOXIDE (CO) LEVELS EXCEED 25 PPM (ADJUSTABLE) OR NITROGEN DIOXIDE (NO) LEVELS EXCEED 1 PPM (ADJUSTABLE), THE VEHICLE GAS DETECTION SYSTEM CONTROL PANEL (VGD-1) SHALL SEQUENCE THE FOLLOWING:

1. SEND AN ENABLE COMMAND TO THE EXHAUST FANS (WEF-3 & WEF-4).
2. SEND AN ENABLE COMMAND TO THE INTAKE LOUVER DAMPER (L-2).
3. SEND AN ENABLE COMMAND TO THE MAKEUP AIR UNIT (MAU-2).
   a. THE MAKEUP AIR UNIT CONTROLLER SHALL MODULATE THE SUPPLY FAN TO MAINTAIN A NEGATIVE SPACE PRESSURE OF -0.01" W.C. (ADJUSTABLE).
   b. THE MAKEUP AIR UNIT CONTROLLER SHALL ALSO MODULATE THE GAS VALVE TO MAINTAIN A DISCHARGE AIR TEMPERATURE OF 60°F (ADJUSTABLE).

WHEN CARBON MONOXIDE (CO) LEVELS FALL BELOW 25 PPM AND NITROGEN DIOXIDE (NO) LEVELS FALL BELOW 1 PPM, THE VEHICLE GAS DETECTION SYSTEM CONTROL PANEL (VGD-1) SHALL SEQUENCE THE FOLLOWING:

1. SEND A DISABLE COMMAND TO THE EXHAUST FANS (WEF-3 & WEF-4).
2. SEND AN ENABLE COMMAND TO THE MAKEUP AIR UNIT (MAU-2).
3. SEND A DISABLE COMMAND TO THE INTAKE LOUVER DAMPER (L-2).

CO/NO2 SENSOR REQUIREMENTS :
1. CERTIFIED BY THE MANUFACTURER TO BE ACCURATE WITHIN PLUS OR MINUS 5 PERCENT OF MEASUREMENT.
2. FACTORY CALIBRATED.
3. CERTIFIED BY THE MANUFACTURER TO DRIFT NO MORE THAN 5 PERCENT PER YEAR.
4. CERTIFIED BY THE MANUFACTURER TO REQUIRE CALIBRATION NO MORE FREQUENTLY THAN ONCE A YEAR.

VEHICLE EXHAUST SYSTEM SCHEMATIC AND SEQUENCE OF OPERATION

PROFESSIONAL ENGINEER LICENSED 16683 2/10/2023 STATE OF IDAHO CHRISTOPHER DYKE

MUSGROVE ENGINEERING, P.A.
234 S. Whisperwood Way
Boise, ID 83709
208.384.0585
645 West 25th Street
Idaho Falls, ID 83402
208.523.2862
www.musgrovepa.com
PROJECT NO. 22-455

MILLER STAUFFER ARCHITECTS
601 E. FRONT AVE., STE 201
COEUR D' ALENE, IDAHO 83814
P 208.664.1773 F 208.667.3174
WWW.MILLERSTAUFFER.COM

LICENSED ARCHITECT AR-1050 MONTE J. MILLER STATE OF IDAHO

MECHANICAL SCHEDULES & CONTROLS
Preliminary
10-6-2022

Powell Station Maintenance Facility
Highway 12
Powell Station, Idaho

No.	Description	Date

PROJECT NUMBER 2206
PRINCIPAL Designer
PROJECT MANAGER Author

M3.1

2/10/2023 5:00:25 PM Autodesk Docs://ITD Powell Maintenance Facility/22-455 ITD POWELL STATION MAINTENANCE MEP r23.rvt

GENERAL :
THE DUCTED SPLIT SYSTEM SHALL CONSIST OF A DUCTED INDOOR FAN COIL UNIT, AN OUTDOOR HEAT PUMP UNIT, AN ELECTRIC DUCT HEATER, A LOUVER WITH A MOTORIZED OUTSIDE AIR DAMPER, AND A MANUFACTURER PROVIDED WIRED CONTROLLER.

THE DUCTED FAN COIL UNIT IS PART OF THE MULTIPORT SYSTEM ASSOCIATED WITH FC-2.1, FC-2.2, & HP-2.

OPERATION :
THE WIRED CONTROLLER SHALL CONTROL THE OPERATION OF THE DUCTED SPLIT SYSTEM, THE LOUVER WITH MOTORIZED DAMPER, AND THE ELECTRIC DUCT HEATER.

THE MOTORIZED OUTSIDE AIR DAMPER AND DUCT HEATER SHALL BE INTERLOCKED WITH THE FC-5 SUPPLY FAN. WHENEVER THE SUPPLY FAN IS ENABLED THE DAMPER SHALL OPEN AND THE DUCT HEATER SHALL BE ENABLED.

THE THERMOSTAT SHALL BE PROGRAMMED FOR OCCUPIED FROM 7AM TO 5PM MONDAY THROUGH FRIDAY (ADJUSTABLE).

COOLING MODE OF OPERATION :
IF COOLING IS REQUIRED, THE WIRED CONTROLLER SHALL ENABLE THE COMPRESSORIZED COOLING SYSTEM TO MAINTAIN THE USER ADJUSTABLE COOLING SPACE SET POINT. IF THE SPACE IS BELOW THE COOLING SET POINT, THE DUCTLESS SPLIT SYSTEM SHALL BE DISABLED.

STAGE 1 HEATING MODE OF OPERATION (HEAT PUMP) :
IF HEATING IS REQUIRED, THE WIRED CONTROLLER SHALL ENABLE THE COMPRESSORIZED HEATING SYSTEM TO MAINTAIN THE USER ADJUSTABLE HEATING SPACE SET POINT. IF THE SPACE IS ABOVE THE HEATING SET POINT, THE DUCTLESS SPLIT SYSTEM SHALL BE DISABLED.

DUCT HEATER MODE OF OPERATION :
THE DUCT HEATER SHALL BE INTERLOCKED WITH THE FC-5 SUPPLY FAN. THE DUCT HEATER SHALL STAGE THE HEATING ELEMENTS TO MAINTAIN THE DISCHARGE AIR TEMPERATURE SET POINT.

THE OCCUPIED SPACE TEMPERATURE COOLING SET POINT SHALL BE SET AT 75°F (ADJUSTABLE).
THE OCCUPIED SPACE TEMPERATURE HEATING SET POINT SHALL BE SET AT 70°F (ADJUSTABLE).
THE DISCHARGE AIR TEMPERATURE SET POINT SHALL BE SET AT 70°F (ADJUSTABLE).

THE UNOCCUPIED SPACE TEMPERATURE COOLING SET POINT SHALL BE SET AT 85°F (ADJUSTABLE).
THE UNOCCUPIED SPACE TEMPERATURE HEATING SET POINT SHALL BE SET AT 55°F (ADJUSTABLE).

SAFETIES :
1. THE SYSTEM SHALL BE DISABLED WHENEVER THE WATER LEVEL OVERFLOW SWITCH INDICATES A HIGH CONDENSATE LEVEL
2. A LOW LIMIT STAT SHALL DISABLE THE FAN COIL UNIT, CLOSE THE MOTORIZED OUTSIDE AIR DAMPER, AND DISABLE THE DUCT HEATER.

DUCTED SPLIT SYSTEM WITH ELECTRIC DUCT HEATER AND MOTORIZED OUTSIDE AIR DAMPER SYSTEM SEQUENCE OF OPERATION

(FC-2.3/HP-2/DH-1/L-4)

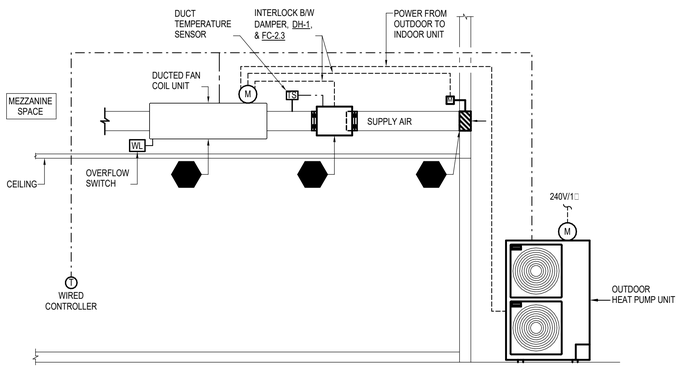

DUCTED SPLIT SYSTEM WITH ELECTRIC DUCT HEATER AND MOTORIZED OUTSIDE AIR DAMPER SYSTEM CONTROL SCHEMATIC

(FC-2.3/HP-2/DH-1/L-4)

GENERAL :
THE DUCTLESS SPLIT SYSTEM SHALL CONSIST OF AN INDOOR FAN COIL UNIT, AN OUTDOOR HEAT PUMP UNIT, AND A MANUFACTURER PROVIDED WIRED CONTROLLER. THE WIRED CONTROLLER SHALL ALSO INCLUDE CONTROL OF AN ELECTRIC HEATER WITH AN AUXILIARY HEAT RELAY.

OPERATION :
THE WIRED CONTROLLER SHALL CONTROL THE OPERATION OF THE DUCTLESS SPLIT SYSTEM AND THE ELECTRIC HEATER(S).

THE THERMOSTAT SHALL BE PROGRAMMED FOR OCCUPIED FROM 7AM TO 5PM MONDAY THROUGH FRIDAY (ADJUSTABLE).

COOLING MODE OF OPERATION :
IF COOLING IS REQUIRED, THE WIRED CONTROLLER SHALL ENABLE THE COMPRESSORIZED COOLING SYSTEM TO MAINTAIN THE USER ADJUSTABLE COOLING SPACE SET POINT. IF THE SPACE IS BELOW THE COOLING SET POINT, THE DUCTLESS SPLIT SYSTEM SHALL BE DISABLED.

STAGE 1 HEATING MODE OF OPERATION (HEAT PUMP) :
IF HEATING IS REQUIRED, THE WIRED CONTROLLER SHALL ENABLE THE COMPRESSORIZED HEATING SYSTEM TO MAINTAIN THE USER ADJUSTABLE HEATING SPACE SET POINT. IF THE SPACE IS ABOVE THE HEATING SET POINT, THE DUCTLESS SPLIT SYSTEM SHALL BE DISABLED.

STAGE 2 HEATING MODE OF OPERATION (ELECTRIC HEATER) :
IF ADDITIONAL HEATING IS REQUIRED, THE WIRED CONTROLLER SHALL ENABLE THE ELECTRIC WALL HEATER(S) TO MAINTAIN THE USER ADJUSTABLE HEATING SPACE SET POINT. IF THE SPACE IS ABOVE THE HEATING SET POINT, THE ELECTRIC HEATER(S) SHALL BE DISABLED.

THE OCCUPIED SPACE TEMPERATURE COOLING SET POINT SHALL BE SET AT 75°F (ADJUSTABLE).
THE OCCUPIED SPACE TEMPERATURE HEATING SET POINT SHALL BE SET AT 70°F (ADJUSTABLE).

THE UNOCCUPIED SPACE TEMPERATURE COOLING SET POINT SHALL BE SET AT 85°F (ADJUSTABLE).
THE UNOCCUPIED SPACE TEMPERATURE HEATING SET POINT SHALL BE SET AT 55°F (ADJUSTABLE).

SAFETIES :
1. THE SYSTEM SHALL BE DISABLED WHENEVER THE WATER LEVEL OVERFLOW SWITCH INDICATES A HIGH CONDENSATE LEVEL.

DUCTLESS SPLIT & ELECTRIC HEATER SYSTEM SEQUENCE OF OPERATION

(FC-1.1/HP-1/EH-2/EH-3, FC-1.2/HP-1/EH-4 , FC-2.1/HP-2/EH-7, FC-2.2/HP-2/EH-8/EH-9)

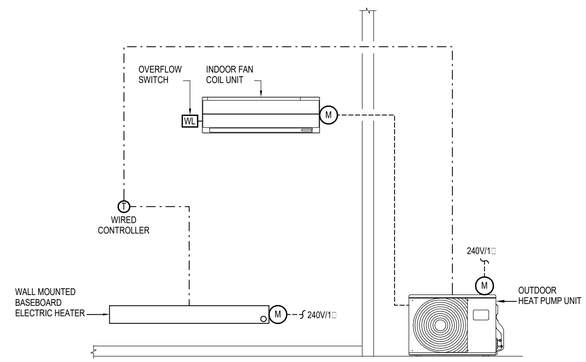

DUCTLESS SPLIT & ELECTRIC HEATER SYSTEM CONTROL SCHEMATIC

(FC-1.1/HP-1/EH-2/EH-3, FC-1.2/HP-1/EH-4 , FC-2.1/HP-2/EH-7, FC-2.2/HP-2/EH-8/EH-9)

GENERAL :
THE DUCTLESS SPLIT SYSTEM SHALL CONSIST OF AN INDOOR FAN COIL UNIT, AN OUTDOOR HEAT PUMP UNIT, AND A MANUFACTURER PROVIDED WIRELESS CONTROLLER.

OPERATION :
THE WIRELESS CONTROLLER SHALL CONTROL THE OPERATION OF THE DUCTLESS SPLIT SYSTEM.

COOLING MODE OF OPERATION :
IF COOLING IS REQUIRED, THE WIRED CONTROLLER SHALL ENABLE THE COMPRESSORIZED COOLING SYSTEM TO MAINTAIN THE USER ADJUSTABLE COOLING SPACE SET POINT. IF THE SPACE IS BELOW THE COOLING SET POINT, THE DUCTLESS SPLIT SYSTEM SHALL BE DISABLED.

THE SPACE TEMPERATURE COOLING SET POINT SHALL BE SET AT 75°F (ADJUSTABLE).

THIS SYSTEM SHALL BE LOCKED OUT OF THE HEATING MODE.

SAFETIES :
1. THE SYSTEM SHALL BE DISABLED WHENEVER THE WATER LEVEL OVERFLOW SWITCH INDICATES A HIGH CONDENSATE LEVEL.

DUCTLESS SPLIT SYSTEM SEQUENCE OF OPERATION

(FC-3/HP-3)

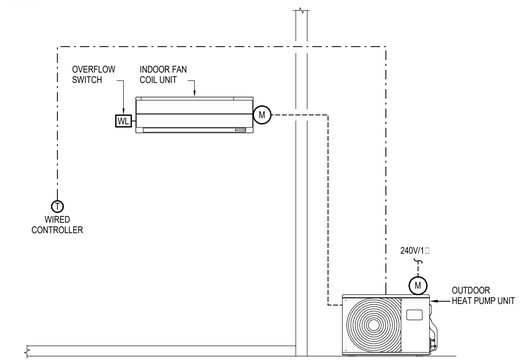

DUCTLESS SPLIT SYSTEM CONTROL SCHEMATIC

(FC-3/HP-3)

MUSGROVE ENGINEERING, P.A.
234 S. Whisperwood Way
Boise, ID 83709
208.384.0585
645 West 25th Street
Idaho Falls, ID 83402
208.523.2862
www.musgrovepa.com
PROJECT NO. 22-455

MILLER STAUFFER ARCHITECTS
601 E. FRONT AVE., STE 201
COEUR D' ALENE, IDAHO 83814
P 208.664.1773 F 208.667.3174
WWW.MILLERSTAUFFER.COM

MECHANICAL CONTROLS

Preliminary

10-6-2022

Powell Station Maintenance Facility

Highway 12
Powell Station, Idaho

LICENSED ARCHITECT AR-1050 MONTE J. MILLER STATE OF IDAHO

PROFESSIONAL ENGINEER LICENSED 16683 2/10/2023 STATE OF IDAHO CHRISTOPHER DYKE

No.	Description	Date

PROJECT NUMBER 2206
PRINCIPAL Designer
PROJECT MANAGER Author

M4.0

2/10/2023 5:00:25 PM Autodesk Docs://ITD Powell Maintenance Facility/22-455 ITD POWELL STATION MAINTENANCE MEP r23.rvt

MUSGROVE ENGINEERING, P.A.
234 S. Whisperwood Way
Boise, ID 83709
208.384.0585
645 West 25th Street
Idaho Falls, ID 83402
208.523.2862
www.musgrovepa.com
PROJECT NO. 22-455

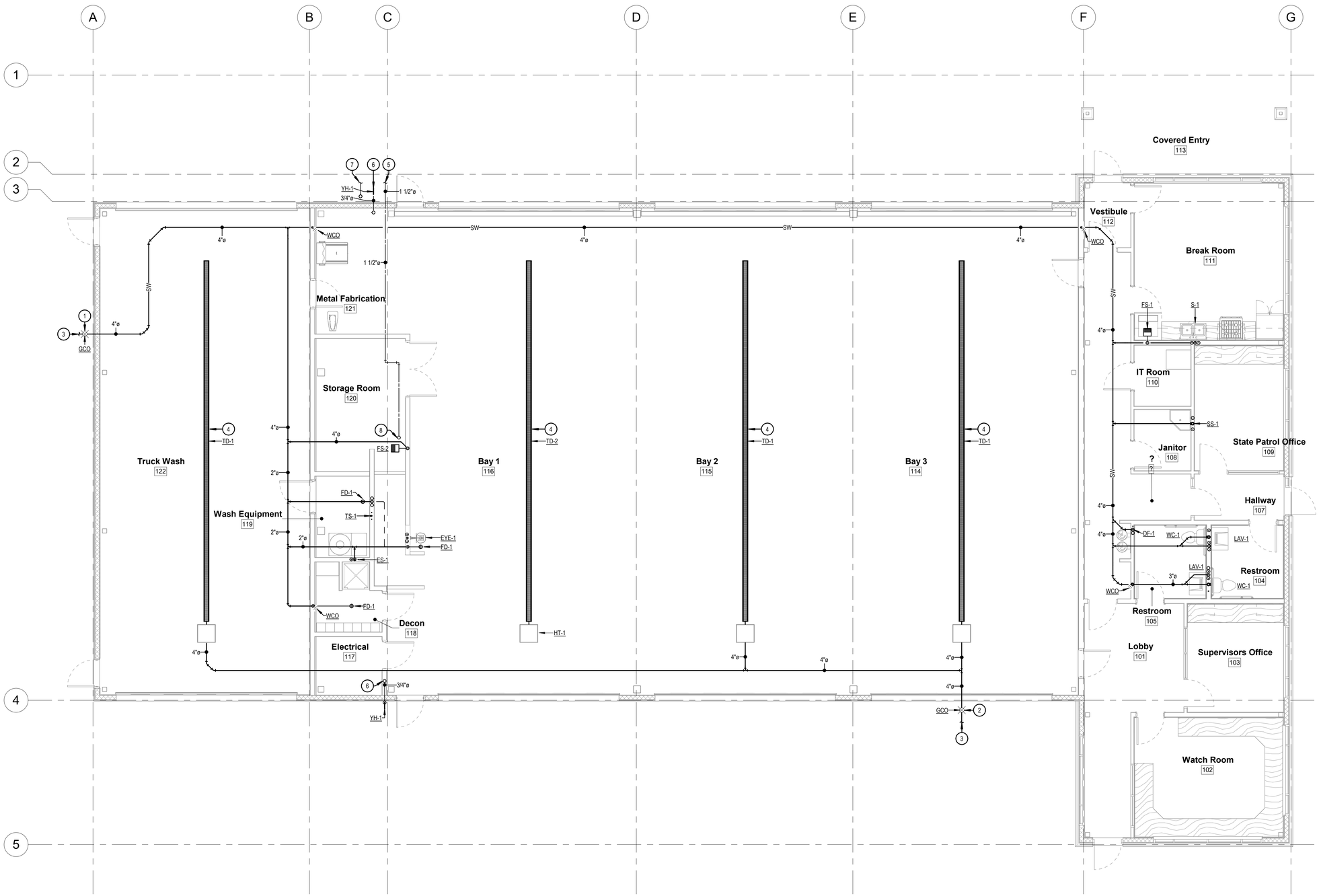

KEYED NOTES:

(#) SYMBOL USED FOR CALLOUT

1. INVERT AT THIS LOCATION IS 42" B.F.F. AT A SLOPE OF 1/8" PER FOOT. SEE CIVIL DRAWINGS FOR CONTINUATION.
2. INVERT AT THIS LOCATION IS 36" B.F.F. AT A SLOPE OF 1/8" PER FOOT.
3. SEE CIVIL DRAWINGS FOR CONTINUATION.
4. TRENCH DRAIN ASSEMBLED WITH 1/16" SLOPE PER FOOT.
5. ROUTE 1-1/2" CW FROM EXISTING PUMP STATION. SEE CIVIL DRAWINGS FOR CONTINUATION.
6. 3/4" CW FROM ABOVE TO YARD HYDRANT (YH-1).
7. SEE CIVIL DRAWINGS FOR CONTINATION AND SIZING OF PROPANE GAS LINE. GAS LOAD OF 667.2-MBH AT 2-PSI ENTERING BUILDING.
8. ROUTE 1-1/2" CW UP THROUGH FLOOR. SEE SHEET P1.1 FOR CONTINUATION.

Foundation Plumbing Plan

3/16" = 1'-0"

PROFESSIONAL ENGINEER LICENSED 16683 2/10/2023 STATE OF IDAHO CHRISTOPHER DYER

MILLER STAUFFER ARCHITECTS
601 E. FRONT AVE., STE 201
COEUR D' ALENE, IDAHO 83814
P 208.664.1773 F 208.667.3174
WWW.MILLERSTAUFFER.COM

PLUMBING FOUNDATION PLAN
Preliminary
10-6-2022

Powell Station Maintenance Facility
Highway 12
Powell Station, Idaho

LICENSED ARCHITECT AR-1050 MONTE J. MILLER STATE OF IDAHO

No.	Description	Date

PROJECT NUMBER 2206
PRINCIPAL Designer
PROJECT MANAGER Author

P1.0

2/10/2023 5:00:28 PM Autodesk Docs://ITD Powell Maintenance Facility/22-455 ITD POWELL STATION MAINTENANCE MEP r23.rvt

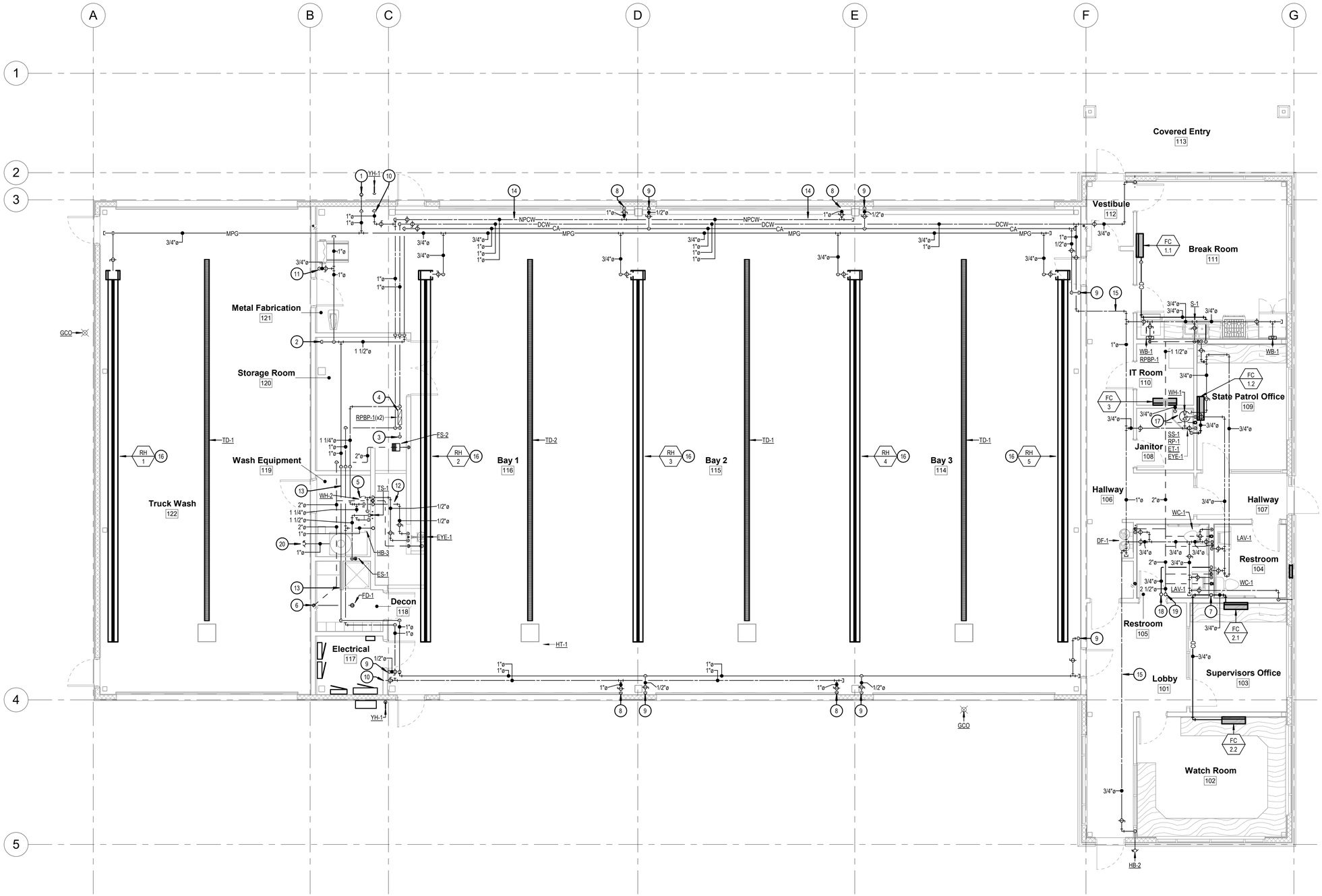

Plumbing Plan

3/16" = 1'-0"

MUSGROVE ENGINEERING, P.A.
234 S. Whisperwood Way
Boise, ID 83709
208.384.0585
645 West 25th Street
Idaho Falls, ID 83402
208.523.2862
www.musgrovepa.com

PROJECT NO. 22-455

KEYED NOTES:

(#) SYMBOL USED FOR CALLOUT

1. ROUTE NEW 1" MPG INTO BUILDING WITH 2-PSI REGULATOR ON EXTERIOR OF BUILDING. SEE GAS REGULATOR DETAIL #2 ON SHEET P2.1 FOR INSTALLATION REQUIREMENTS.
2. ROUTE 1-1/2" CA LINE DOWN TO AIR COMPRESSOR. CONNECT PER MANUFACTURER'S RECOMMENDATIONS.
3. ROUTE 1-1/2" CW UP FROM FLOOR BELOW.
4. PROVIDE 1-1/2" POTABLE CW AND 1" NON-POTABLE CW BACKFLOW DEVICE. SEE DETAIL #8 & #9 ON SHEET P2.1 FOR INSTALLATION REQUIREMENTS.
5. SEE WATER HEATER PIPING DETAIL #4 ON SHEET P2.1 FOR INSTALLATION REQUIREMENTS.
6. COMBINE TO SINGLE 2" VENT AND ROUTE UP TO ROOF.
7. ROUTE COMBINED 3/4" CD TO SINK TAILPIECE. SEE DETAIL #11 ON SHEET P1.3 ON SHEET P2.1 FOR INSTALLATION REQUIREMENTS.
8. ROUTE 1" NPCW DOWN WALL TO HOSE BIBB (HB-1). SEE DETAIL #3 ON SHEET P2.0 FOR INSTALLATION REQUIREMENTS.
9. ROUTE 1/2" CA DOWN WALL TO HOSE REEL PROVIDED BY OTHERS. SEE DETAIL #7 ON SHEET P2.1 FOR INSTALLATION REQUIREMENTS.
10. ROUTE 3/4" NPCW DOWN INSIDE WALL. SEE SHEET P1.0 FOR CONTINUATION.
11. ROUTE 3/4" CA DOWN WALL TO HOSE REEL PROVIDED BY OTHERS. SEE DETAIL #7 ON SHEET P2.1 FOR INSTALLATION REQUIREMENTS.
12. ROUTE 1/2" CW & HW BELOW STAIRS TO EMERGENCY EYEWASH (EYE-1).
13. ROUTE PIPES ABOVE CEILING.
14. ROUTE PIPES ABOVE ROLLUP DOORS. AVOID ALL EQUIPMENT AND RAILING. COORDINATE WITH OTHER TRADES PRIOR TO INSTALLATION.
15. ROUTE CW PIPING UP TIGHT TO CEILING. COORDINATE WITH OTHER TRADES PRIOR TO INSTALLATION.
16. SEE GAS CONNECTION DETAILS #1 & #2 ON SHEET P2.1 FOR INSTALLATION REQUIREMENTS.
17. SEE WATER HEATER PIPING DETAIL #2 ON SHEET P2.0 FOR INSTALLATION REQUIREMENTS.
18. ROUTE 3/4" CD FROM FAN COIL IN MEZZANINE ABOVE TO SINK TAILPIECE. SEE DETAIL #11 ON SHEET P2.1 FOR INSTALLATION REQUIREMENTS.
19. ROUTE COMBINED 2-1/2" VENT TO ROOF.
20. ROUTE 1" CW TO QUICK CONNECT CONNECTION FOR HOTSY SPRAY HOSE. COORDINATE WITH OWNER AND EQUIPMENT PRIOR TO INSTALLATION.

PROFESSIONAL ENGINEER
LICENSED
16683
2/10/2023
STATE OF IDAHO
CHRISTOPHER DYKES

MILLER STAUFFER ARCHITECTS
601 E. FRONT AVE., STE 201
COEUR D' ALENE, IDAHO 83814
P 208.664.1773 F 208.667.3174
WWW.MILLERSTAUFFER.COM

PLUMBING PLAN

Preliminary
10-6-2022

Powell Station Maintenance Facility

Highway 12
Powell Station, Idaho

LICENSED ARCHITECT
AR-1050
MONTE J. MILLER
STATE OF IDAHO

No.	Description	Date

PROJECT NUMBER 2206
PRINCIPAL Designer
PROJECT MANAGER Author

P1.1

2/10/2023 5:00:32 PM Autodesk Docs://ITD Powell Maintenance Facility/22-455 ITD POWELL STATION MAINTENANCE MEP r23.rvt

MUSGROVE ENGINEERING, P.A.
234 S. Whisperwood Way
Boise, ID 83709
208.384.0585
645 West 25th Street
Idaho Falls, ID 83402
208.523.2862
www.musgrovepa.com
PROJECT NO. 22-455

KEYED NOTES:

(#) SYMBOL USED FOR CALLOUT

1. ROUTE 3/4" MPG UP FROM FLOOR BELOW. SEE SHEET P1.1 FOR CONTINUATION.
2. SEE GAS CONNECTION DETAILS #1 & #2 ON SHEET P2.1 FOR INSTALLATION REQUIREMENTS.

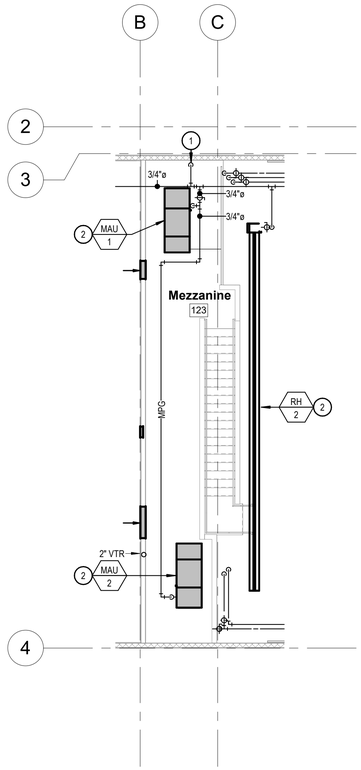

Mezzanine Plumbing Plan
1/8" = 1'-0"

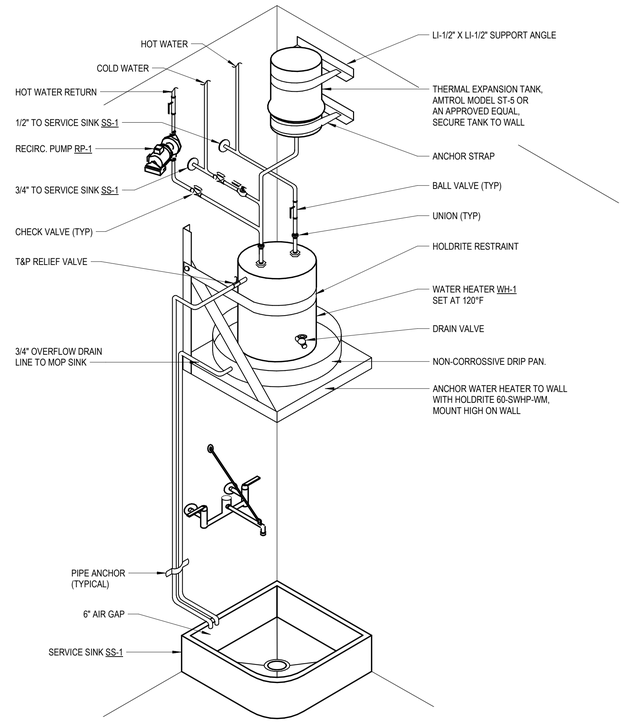

2 SERVICE SINK & WATER HEATER DETAIL
NTS

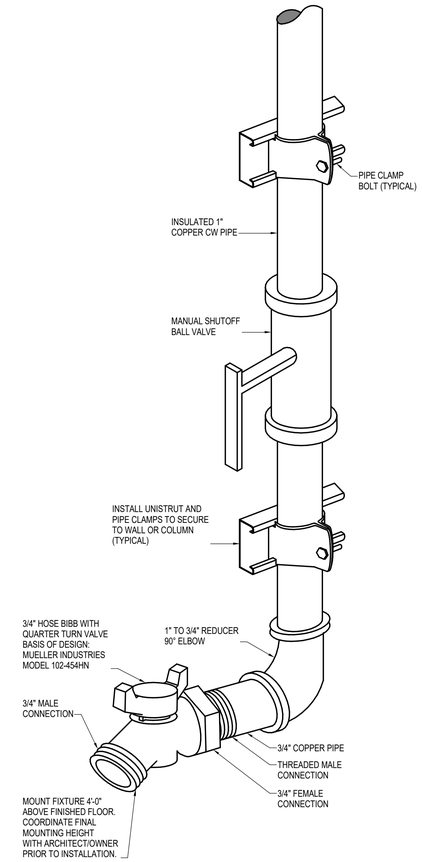

3 BAY HOSE BIBB PIPING DETAIL (HB-1)
NTS

PRESSSURE ACTIVATED TRAP PRIMER NOTES:

1. THE PRIMING VALVE MUST BE INSTALLED ON A FRESH COLD WATER LINE OF 1/2" TO 1-1/2" DIAMETER.
2. DISTRIBUTION UNIT MUST BE INSTALLED LEVEL WITH AN ACCESS DOOR FOR PERIODIC INSPECTION.
3. DO NOT SUBJECT TRAP PRIMER VALVE TO ROUGH-IN PRESSURE TEST.
4. DISTANCE FROM DISTRIBUTION UNIT TO FLOOR MUST BE 12" FOR EVERY 20' HORIZONTALLY.
5. TRAP PRIMER SHALL BE PRECISION PLUMBING PRODUCTS MODEL CPO-500 WITH DU DISTRIBUTION UNIT IF REQUIRED. APPROVED ALTERNATES: MIFAB, SIOUX CHIEF, AND ZURN.

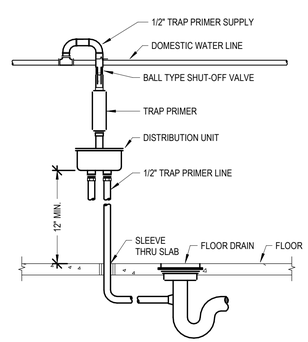

4 TRAP PRIMER CONNECTION DETAIL
NTS

NOTES:

1. MAINTAIN ONE-FOURTH (1/4) INCH PER FOOT SLOPE.
2. THE DEVELOPED LENGTH BETWEEN THE TRAP OF A WATER CLOSET OR SIMILAR FIXTURE (MEASURED FROM THE TOP OF THE CLOSET FLANGE TO THE INNER EDGE OF THE VENT) AND IT'S VENT SHALL NOT EXCEED SIX (6) FEET.
3. ALL PLUMBING EQUIPMENT AND SYSTEMS SHALL BE INSTALLED IN ACCORDANCE WITH THE LATEST ADOPTED PLUMBING CODE, AND ALL LOCAL AND STATE CODES.

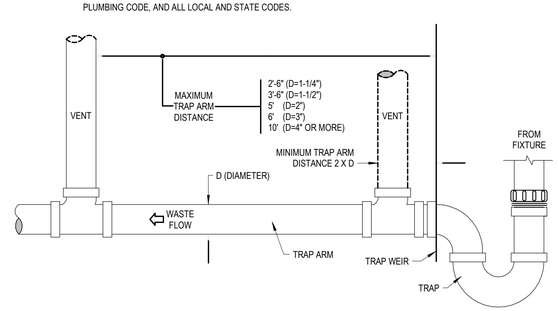

5 TRAP ARM DETAIL
NTS

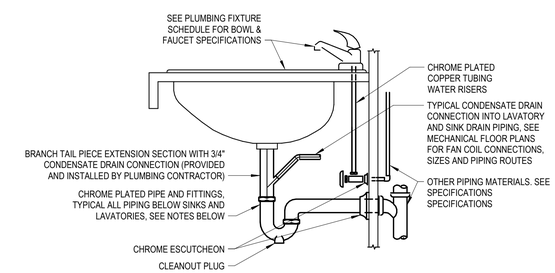

NOTES:

1. INTERIOR EXPOSED PIPE, VALVES AND FIXTURE TRIM, INCLUDING TRIM BEHIND CASEWORK DOORS, SHALL BE CHROME PLATED.
2. ALL PIPING PENETRATIONS THROUGH FINISHED WALLS SHALL BE PROVIDED WITH CHROME ESCUTCHEONS.
3. ALL SINK AND LAVATORY TRAPS SHALL BE PROVIDED WITH A CLEANOUT PLUG IN THE BOTTOM OF THE TRAP.
4. ALL PLUMBING FIXTURES SHALL BE CAULKED AND SEALED TO SURROUNDING SURFACES.
5. PLUMBING CONTRACTOR SHALL VERIFY THE LOCATION OF ALL LAVATORIES AND SINKS THAT NEED TO BE INSTALLED WITH THE BRANCH TAIL PIECE SECTION WITH 3/4" DRAIN CONNECTION. THE PLUMBING CONTRACTOR WILL BE RESPONSIBLE TO VERIFY THE PLUMBING ROUGH-IN DIMENSIONS AND SHALL TAKE INTO ACCOUNT THE TAIL PIECE EXTENSION DIMENSIONS.

6 SINK/LAVATORY TAILPIECE & TRAP DETAIL (W/ CONDENSATE)
NTS

PROFESSIONAL ENGINEER LICENSED 16683 2/10/2023 STATE OF IDAHO CHRISTOPHER DYKE

MILLER STAUFFER ARCHITECTS
601 E. FRONT AVE., STE 201
COEUR D' ALENE, IDAHO 83814
P 208.664.1773 F 208.667.3174
WWW.MILLERSTAUFFER.COM

MEZZANINE PLUMBING PLAN & DETAILS
Preliminary
10-6-2022

Powell Station Maintenance Facility
Highway 12
Powell Station, Idaho

LICENSED ARCHITECT AR-1050 MONTE J. MILLER STATE OF IDAHO

No.	Description	Date

PROJECT NUMBER 2206
PRINCIPAL Designer
PROJECT MANAGER Author

P2.0

2/10/2023 5:00:33 PM Autodesk Docs://ITD Powell Maintenance Facility/22-455 ITD POWELL STATION MAINTENANCE MEP -23.rvt

MUSGROVE ENGINEERING, P.A.
234 S. Whisperwood Way
Boise, ID 83709
208.384.0585
645 West 25th Street
Idaho Falls, ID 83402
208.523.2862
www.musgrovepa.com
PROJECT NO. 22-455

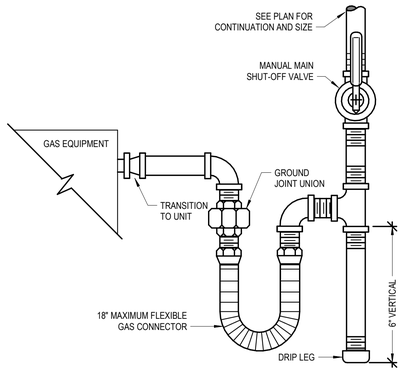

1 GAS EQUIPMENT CONNECTION DETAIL
NTS

VENTING NOTES:

1. VENT REGULATORS PER MANUFACTURER'S AND LOCAL GAS COMPANY'S REQUIREMENTS.
2. DO NOT REDUCE THE VENT PIPE SIZE FROM THE REGULATOR.
3. TO LIMIT THE CONSEQUENCES OF RAIN, SNOW OR DEBRIS GETTING INTO THE VENT, ALWAYS TURN THE OUTLET OF THE VENT DOWN AND ABOVE POTENTIAL WATER OR SNOW LINES.
4. PROVIDE A BUG SCREEN ON THE VENT OUTLET TO DETER INSECTS FROM NESTING IN THE LINE. NEVER PAINT OVER THE BUG SCREEN.
5. A VENT LINE PROTECTOR MAY BE USED IN OUTDOOR APPLICATIONS TO PREVENT ENTRY OF WATER, INSECTS OR OTHER FOREIGN MATERIALS THAT COULD CAUSE BLOCKAGE.
6. VENT MUST BE PIPED A MINIMUM 3 FEET ABOVE OR 10 FEET AWAY FROM ALL FRESH AIR INTAKES.
7. VENTS SHALL RUN INDEPENDENTLY TO THE OUTDOORS AND SHALL SERVE ONLY A SINGLE DEVICE VENT.
8. REGULATOR VENT PIPING SHALL NOT EXCEED THE LENGTH SPECIFIED IN THE REGULATOR MANUFACTURER'S INSTRUCTIONS.

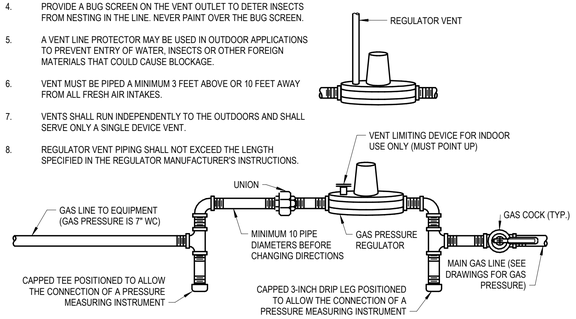

2 GAS PRESSURE REGULATOR DETAIL
NTS

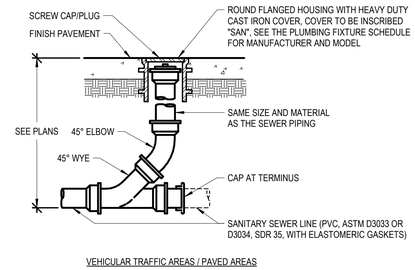

3 GRADE CLEANOUT (GCO) DETAIL
NTS

NOTE:
1. PIPING SHALL BE INSTALLED SUCH THAT WATER HEATER CAN BE REPLACED WITHOUT ANY OBSTRUCTIONS FROM INSTALLED PIPING.

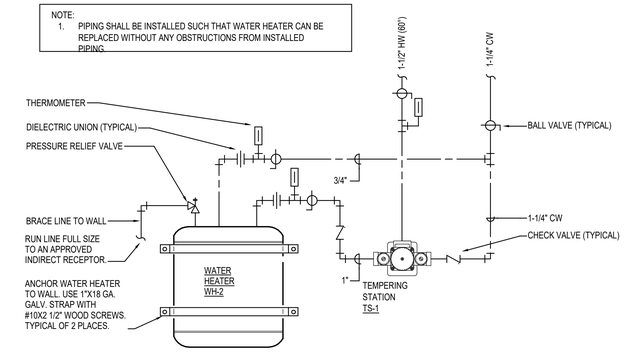

4 WATER HEATER WITH TEMPERING STATION DETAIL
NTS

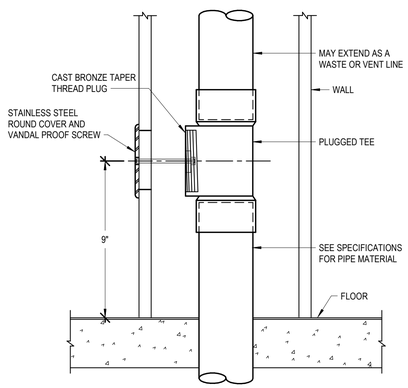

5 WALL CLEANOUT (WCO) DETAIL
NTS

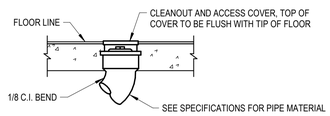

NOTE:
CLEANOUTS SHALL BE PROVIDED AT EACH HORIZONTAL DRAINAGE PIPE AT ITS UPPER TERMINAL, AND EACH RUN OF PIPING WHICH IS MORE THAN 100 FEET, AND SHALL BE PROVIDED FOR EACH 100 FEET DEVELOPED LENGTH, OR FRACTION THEREOF OF SUCH PIPING. AN ADDITIONAL CLEANOUT SHALL BE PROVIDED FOR EACH AGGREGATE HORIZONTAL CHANGE OF DIRECTION EXCEEDING ONE HUNDRED THIRTY-FIVE DEGREES, PER APPLICABLE PLUMBING CODE. THIS SHALL BE PROVIDED REGARDLESS OF WHAT IS SHOWN ON THE DRAWINGS.

6 FLOOR CLEANOUT (FCO) DETAIL
NTS

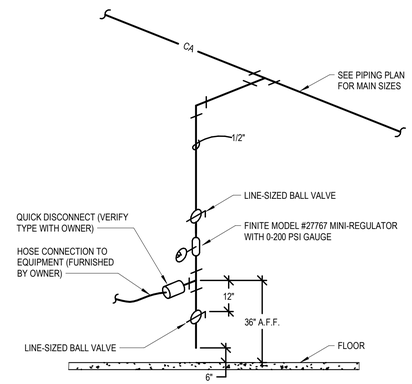

7 COMPRESSED AIR DETAIL
NTS

NOTE:

1. THE PLUMBING CONTRACTOR IS RESPONSIBLE FOR ALL BACKFLOW DEVICES TO BE INSPECTED BY A CERTIFIED BACKFLOW TECHNICIAN BEFORE THE USE OF THE BUILDING POTABLE WATER SYSTEM.
2. THIS SYSTEM IS FOR INDOOR INSTALLATIONS ONLY. THIS VALVE SHALL BE EASILY ACCESSIBLE TO FACILITATE TESTING AND SERVICING. DO NOT INSTALL IN A CONCEALED LOCATION.

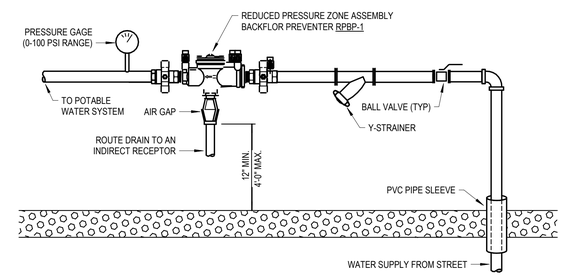

8 BUILDING WATER SERVICE DETAIL
NTS

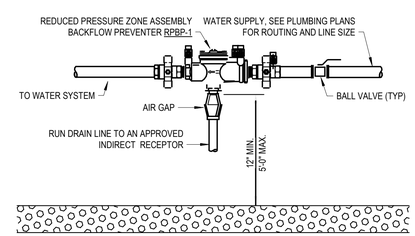

9 REDUCED PRESSURE BACKFLOW PREVENTER DETAIL
NTS

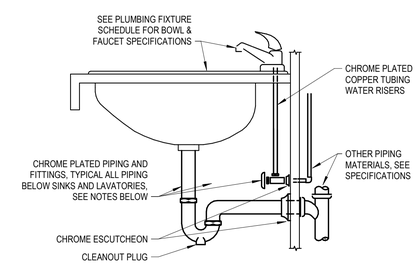

NOTES:
A. INTERIOR EXPOSED PIPE, VALVES AND FIXTURE TRIM, INCLUDING TRIM BEHIND CASEWORK DOORS SHALL BE CHROME PLATED.
B. ALL PIPING PENETRATIONS THROUGH FINISHED WALLS SHALL BE PROVIDED WITH CHROME ESCUTCHEONS.
C. ALL SINK TRAPS SHALL BE PROVIDED WITH A CLEANOUT PLUG IN THE BOTTOM OF THE TRAP.
D. ALL PLUMBING FIXTURES SHALL BE CAULKED AND SEALED TO SURROUNDING SURFACES.

10 SINK/LAVATORY TAILPIECE & TRAP DETAIL
NTS

PROFESSIONAL ENGINEER LICENSED 16683 2/10/2023 STATE OF IDAHO CHRISTOPHER DYKE

MILLER STAUFFER ARCHITECTS
601 E. FRONT AVE., STE 201
COEUR D' ALENE, IDAHO 83814
P 208.664.1773 F 208.667.3174
WWW.MILLERSTAUFFER.COM

PLUMBING DETAILS
Preliminary
10-6-2022

Powell Station Maintenance Facility
Highway 12
Powell Station, Idaho

LICENSED ARCHITECT AR-1050 MONTE J. MILLER STATE OF IDAHO

No.	Description	Date

PROJECT NUMBER 2206
PRINCIPAL Designer
PROJECT MANAGER Author

P2.1

2/10/2023 5:00:34 PM Autodesk Docs://ITD Powell Maintenance Facility/22-455 ITD POWELL STATION MAINTENANCE MEP r23.rvt

PLUMBING FIXTURE SCHEDULE

SYMBOL	FIXTURE DESCRIPTION	CONNECTION SIZE						MANUFACTURER / MODEL NUMBER / DESCRIPTION / ADDITIONAL COMMENTS
		WASTE	VENT	TRAP	CW	HW	TW	
CP-1	CONDENSATE PUMP (5 TONS OR LESS - SINGLE UNIT) (ABOVE CEILING APPLICATION)	1/2 TUBE	--	--	--	--	--	LITTLE GIANT MODEL EC-400, 2 GPH @ 2' HEAD, 3 FT. SUCTION LIFT, SELF PRIMING AND FLOAT CONTROL, 0.24 AMPS, 115/1, 60 HZ.
DF-1	DRINKING FOUNTAIN WITH BOTTLE FILLING STATION (INTERIOR DUAL BUBBLERS) (ELECTRIC WATER COOLER) (ADA COMPLIANT) (HIGH/LOW)	1 1/2	1 1/2	1 1/2	1/2	--	--	MODEL EZSTL8WSVRSK (NON-FILTERED) BI-LEVEL ADA COOLER WITH BOTTLE FILLING STATION FURNISHED WITH FLEXI-GUARD SAFETY BUBBLER. BUBBLER ACTIVATED BY PUSHBAR. BOTTLE FILLER ACTIVATED BY ELECTRONIC SENSOR WITH AUTOMATIC 30-SECOND SHUT-OFF TIMER. 115 VOLT, 5.0 AMPS, 60 HERTZ. PROVIDE WITH JAY R. SMITH 0834 FLOOR MOUNTED SUPPORT CARRIER. CANE APRON TO BE INSTALLED ON HIGH COOLER.
ET-1	EXPANSION TANK	--	--	--	3/4	--	--	AMTROL THERM-X-TROL ST-12, OR APPROVED EQUAL, NON-ASME SERIES THERMAL EXPANSION ABSORBER, ANTI-MICROBIAL LINER, AND 5 YEAR WARRANTY.
ES-1	EMERGENCY EYE WASH/ SHOWER COMBINATION (CUBICLE SAFETY SHOWER) (ADA COMPLIANT)	1 1/2	1 1/2	1 1/4	--	--	1	HUGHES MODEL SD32K45G CUBICLE SAFETY SHOWER WITH ABS CLOSED BOWL EYE WASH. TEMPERED WATER CONNECTION FROM TEMPERING STATION.
EYE-1	EMERGENCY EYE WASH (WALL MOUNTED w/ RECOIL HOSE)	--	--	--	1/2	1/2	--	ACORN SAFETY MODEL S0406-CH12-BFP, WALL MOUNTED WITH DUAL 45" ANGLED HEADS AND RECOIL HOSE, PROVIDE WITH FLIP TOP DUST COVERS, UNIVERSAL EMERGENCY SIGN, DOUBLE CHECK VALVE, STAINLESS STEEL 90° WITH SHEET NIPPLE, AND ACORN MODEL ET71-1-BVS-OTG LEAD-FREE EMERGENCY THERMOSTATIC MIXING VALVE WITH 1/2" NPT INLETS & OUTLET, 4 GPM @ 5 PSID. PROVIDE WITH LOCKABLE INLET BALL VALVES, STANDARD OUTLET TEMPERATURE GAUGE, AND SELECTABLE TEMPERATURE RANGE FROM 60°F TO 95°F.
FCO	FLOOR CLEANOUT	SEE PLANS	--	--	--	--	--	JAY R. SMITH 4020 SERIES WITH ADJUSTABLE, ROUND NICKEL BRONZE TOP AND ABS PLUG.
FD-1	FLOOR DRAIN (DUCTILE IRON BODY) (CONCRETE FLOOR)	2	2	2	--	--	--	SIOUX CHIEF SERIES NUMBER 832-25DNR, POST-CONSTRUCTION LEVELING FLOOR DRAIN, NO-HUB OUTLET, 5-1/2" ROUND, ADJUSTABLE NICKEL BRONZE STRAINER AND TRAP PRIMER PORT. INSTALL TOP OF DRAIN 1/8" BELOW FINISH FLOOR AND CAULK EDGE.
FS-1	FLOOR SINK (6" DEEP) (HALF GRATE, FOOT TRAFFIC RATED)	2	2	2	--	--	--	JAY R. SMITH FIGURE NUMBER 3100Y-12, CAST IRON RECEPTOR, ALUMINUM DOME STRAINER, NICKEL BRONZE GRATE, AND TRAP PRIMER. INSTALL TOP OF SINK 1/8" BELOW FINISH FLOOR AND CAULK EDGE.
FS-2	FLOOR SINK (10" DEEP) (HALF GRATE, FOOT TRAFFIC RATED)	4	2	4	--	--	--	JAY R. SMITH FIGURE NUMBER 3160Y-12, CAST IRON RECEPTOR, ALUMINUM DOME STRAINER, NICKEL BRONZE GRATE, AND TRAP PRIMER. INSTALL TOP OF SINK 1/8" BELOW FINISH FLOOR AND CAULK EDGE.
GCO	GRADE CLEANOUT (PAVED AREAS) (VEHICULAR TRAFFIC)	SEE PLANS	--	--	--	--	--	JAY R. SMITH 4250 SERIES, ROUND FLANGED HOUSING WITH HEAVY DUTY CAST IRON COVER. FURNISH WITH ABS PLUG. COVER TO BE INSCRIBED "SAN".
HB-1	HOSE BIBB (INTERIOR)	--	--	--	3/4	--	--	MUELLER INDUSTRIES 102-454HN HOSE BIBB, 3/4" FEMALE INLET, 3/4" MALE OUTLET.
HB-2	HOSE BIBB (EXTERIOR) (NON-FREEZE)	--	--	--	3/4	--	--	WOODFORD MODEL 67 - EXPOSED STYLE WITH MODEL 50HA BACKFLOW PREVENTER, 3/4" INLET , AND CHROME PLATED. PROVIDE WITH TEE KEY AND INSTALL AT 18" ABOVE FINISH GRADE.
HB-3	HOSE BIBB (INTERIOR)	--	--	--	3/4	--	--	WOODFORD MODEL 26 - EXPOSED STYLE WITH 3/4" INLET, AND CHROME PLATED. PROVIDE WITH METAL WHEEL HANDLE AND WOODFORD MODEL 50HF BACKFLOW PREVENTER.
HT-1	HOLDING TANK	--	--	--	--	--	--	280 GALLON SUB-GRADE HOLDING TANK WITH GAS TIGHT MANHOLE COVER.
LAV-1	LAVATORY (WALL MOUNTED) (ADA COMPLIANT)	1 1/2	1 1/2	1 1/4	1/2	1/2	--	KOHLER KINGSTON MODEL K-2005: VITREOUS CHINA, WALL MOUNTED, HOLES ON 4" CENTERS, AND GRID STRAINER. KOHLER CORALAIS MODEL K-15198: 4-1/2" LONG, SINGLE LEVER FAUCET WITH 0.5 GPM AERATOR. PROVIDE WITH JAY R. SMITH FIGURE NUMBER 0700-Z SUPPORT WITH CONCEALED ARMS AND WATTS SERIES LFUSG-B LEAD-FREE, THERMOSTATIC MIXING VALVE, ASSE STANDARD 1070 LISTED, BRONZE BODY, INTEGRAL CHECK VALVES, AND SELECTABLE TEMPERATURE RANGE FROM 80°F TO 120°F. PROVIDE WITH LS-1 LAV SHIELD.
LS-1	LAVATORY SHIELD (WALL MOUNTED SHIELD FOR CONCEALING PIPING, VALVES, AND INSTANTANEOUS WATER HEATERS)	--	--	--	--	--	--	TRUEBRO "LAV SHIELD" ADA COMPLIANT, TOTAL ENCLOSURE. SINGLE-PIECE CONSTRUCTION, SLOAN OPTISHIELD ETF-529, OR APPROVED EQUAL.
RP-1	RECIRCULATION PUMP (HOT WATER RETURN SYSTEM) (MEDIUM SIZED SYSTEM)	--	--	--	--	3/4	--	BELL AND GOSSETT BRONZE MODEL NBF-22, 115 VOLT, 0.8 AMPS, 92 WATTS, AND SHALL PROVIDE 7 GPM AT 10 FEET HEAD. INCLUDE 7-DAY PROGRAMMABLE ELECTRONIC TIME CLOCK WITH BATTERY BACKUP, INTERMATIC MODEL GM40AVE-RD89. APPROVED ALTERNATE: ARMSTRONG, TACO, GRUNDFOS.
RPBP-1	REDUCED PRESSURE BACKFLOW PREVENTER	INDIRECT			--	--	--	WATTS SERIES LF009 LEAD-FREE REDUCED PRESSURE ZONE ASSEMBLY WITH QUARTER-TURN BALL VALVES, STRAINER, AND AIR GAP. CAST COPPER BODY CONSTRUCTION - 1/2" THRU 2". PROVIDE SERIES 957 FOR SIZES 2 1/2" THRU 10".
S-1	SINK - DOUBLE COMPARTMENT (14" X 14" X 6 DEEP - EACH) (ADA COMPLIANT)	2	1 1/2	1 1/2	1/2	1/2	--	ELKAY LUSTERTONE MODEL LRAD331965: 6-1/2" DEEP, STAINLESS STEEL SINK. PROVIDE AND INSTALL ELKAY MODEL LK3001CR SINGLE LEVER CHROME FAUCET WITH SWING SPOUT AND HOSE SPRAY, ELKAY MODEL LK35 STAINLESS STEEL STRAINER BASKET AND TAILPIECE, AND WATTS SERIES LFUSG-B LEAD-FREE, THERMOSTATIC MIXING VALVE, ASSE STANDARD 1070 LISTED, BRONZE BODY, INTEGRAL CHECK VALVES, AND SELECTABLE TEMPERATURE RANGE FROM 80°F TO 120°F.
SS-1	SERVICE SINK (28" RADIUS CORNER X 12") (FLOOR MOUNTED)	3	2	3	1/2	1/2	--	ACORN TERRAZZO-WARE MODEL TCR-28: PROVIDE AND INSTALL WITH MODEL KFC CHROME UTILITY FAUCET, STAINLESS STEEL BUMPER GUARD, DRAIN GASKET, 36" HOSE AND WALL HANGER, MOP HANGER, AND (2) STAINLESS STEEL WALL GUARDS. MOUNT FAUCET 36" AFF.
TD-1	TRENCH DRAIN (HEAVY TRAFFIC RATED)	4	--	--	--	--	--	SLOT DRAIN MODEL 9000 SERIES STAINLESS STEEL SLOTTED TRENCH DRAIN SYSTEM WITH 1" GAP. PROVIDE WITH END CAPS, OUTLETS, CATCH BASIN AND 3/8" SLOTTED, HEAVY DUTY GRATE. SLOT DRAIN STAINLESS STEEL CATCH BASIN COMMERCIAL SERIES, TRENCH DRAIN INSTALLATION SYSTEM.
TD-2	TRENCH DRAIN (HEAVY TRAFFIC RATED)	4	--	--	--	--	--	SLOT DRAIN MODEL 9000 SERIES STAINLESS STEEL SLOTTED TRENCH DRAIN SYSTEM WITH 1" GAP. PROVIDE WITH END CAPS, OUTLETS, AND NO CATCH BASIN. DRAIN TO HOLDING TANK (HT-1).
TP-1	TRAP PRIMER (PRESSURE ACTIVATED) (1 TO 4 TRAPS)	--	--	--	1/2"	--	--	PRECISION PLUMBING PRODUCTS MODEL CPO-500 WITH DU DISTRIBUTION UNIT IF REQUIRED FOR SERVING MORE THAN ONE TRAP.
TS-1	TEMPERING STATION	--	--	--	1 1/4"	1"	1 1/4"	GUARDIAN G3807LF EYEWASH STATION SAFETY SHOWER WATER TEMPERING VALVE. PROVIDE WITH WALL MOUNTED STAINLESS STEEL CABINET.
WB-1	WALL BOX (WATER SUPPLY TO ICE MAKER)	--	--	--	1/2	--	--	OATEY FIREMASTER MODEL 39121 WITH FACEPLATE AND ADJUSTABLE METAL SUPPORT BRACKETS. FIRE-RATED, LOW LEAD, OR APPROVED EQUAL.
WC-1	WATER CLOSET (17-1/2" SEAT HEIGHT) (FLUSH TANK) (FLOOR MOUNTED) (COMFORT HEIGHT / ADA)	4	2	INT.	1/2	--	--	KOHLER CIMARRON MODEL K-5310 (LEFT LEVER) / K-5310-RA (RIGHT LEVER), FLOOR MOUNTED, GRAVITY FLUSH TANK WITH ELONGATED BOWL, 1.28 GPF. KOHLER LUSTRA MODEL K-4650 ELONGATED, OPEN FRONT SEAT WITH CHECK HINGE AND NO COVER.
WCO	WALL CLEANOUT	SEE PLANS	--	--	--	--	--	JAY R. SMITH 4472T SERIES WITH CAST BRONZE TAPER THREAD PLUG, STAINLESS STEEL ROUND COVER, AND A STAINLESS STEEL VANDAL PROOF SCREW.
WH-1	WATER HEATER (NOMINAL 48 GALLON) (ELECTRIC - 240V / 1□)	--	--	--	SEE PLANS	SEE PLANS	--	BRADFORD WHITE MODEL RE240L6, NON-SIMULTANEOUS DUAL ELEMENTS, 49 GAL. FIRST HOUR RATING, (2) 5.0 KW, 240V/1Ø, 34" TALL, WITH TOP CONNECTIONS. PROVIDE WITH SEISMIC STRAP. PROVIDE WATER HEATER WITH HEAT TRAP.
WH-2	WATER HEATER (NOMINAL 48 GALLON) (ELECTRIC - 240V / 1□)	--	--	--	SEE PLANS	SEE PLANS	--	BRADFORD WHITE MODEL RE240L6, NON-SIMULTANEOUS DUAL ELEMENTS, 49 GAL. FIRST HOUR RATING, (2) 5.0 KW, 240V/1Ø, 34" TALL, WITH TOP CONNECTIONS. PROVIDE WITH SEISMIC STRAP. PROVIDE WATER HEATER WITH HEAT TRAP.
YH-1	YARD HYDRANT (POST STYLE) (NON-FREEZE)	--	--	--	3/4	--	--	WOODFORD MODEL Y30, PROVIDE WITH ANTI-SIPHON VACUUM BREAKER, 3/4" INLET, AND BRASS HEAD CASTING. PROVIDE WITH TEE KEY AND 1 YARD GRAVEL DRAIN BED.

NOTES:

1. ALL ADA COMPLIANT FIXTURES MUST COMPLY WITH ICC/ANSI A117.1. SEE ARCHITECTURAL PLANS FOR HANDICAPPED FIXTURE DESIGNATIONS, LOCATIONS, CLEARANCES, AND MOUNTING HEIGHTS.
2. ALL EXPOSED HW PIPING, CW PIPING, AND DRAIN LINES BENEATH ALL LAVATORIES AND ALL ADA COMPLIANT SINKS MUST BE INSULATED TO PREVENT INJURY. REFER TO ARCHITECTURAL PLANS. INSULATE WITH MOLDED CLOSED CELL VINYL INSULATION - TRUEBRO, PLUMBEREX, OR EQUAL.
3. PROVIDE P-TRAP PRIMERS FOR ALL FLOOR DRAINS AND FLOOR SINKS (NOT ALL TRAP PRIMERS ARE INDICATED ON PLANS - REFERENCE DETAILS FOR ADDITIONAL INFORMATION). PROVIDE A BALL TYPE SHUT-OFF VALVE UPSTREAM OF PRIMER VALVE. SEE SPECIFICATIONS.
4. SEE SPECIFICATIONS FOR ALTERNATE APPROVED MANUFACTURERS.
5. BACKFLOW PREVENTION: THIS BUILDING IS PROVIDED WITH A BACKFLOW PREVENTION DEVICE ON THE MAIN WATER SERVICE AND REDUCED PRESSURE BACKFLOW PREVENTION ON THE FOLLOWING PIECES OF EQUIPMENT:
   - ICE MACHINE
   - NON-POTABLE COLD WATER LINE FOR HOSE BIBBS IN BAY AREAS

GAS SIZING CHART

SYMBOL	INPUT (MBH)	RUNOUT SIZE (2-PSI) (INCHES)	EQUIPMENT CONNECTION SIZES (7" WC) (INCHES)
RH-1	75.0	3/4"	1/2"
RH-2	75.0	3/4"	1/2"
RH-3	75.0	3/4"	1/2"
RH-4	75.0	3/4"	1/2"
RH-5	75.0	3/4"	1/2"
MAU-1	70.3	3/4"	1/2"
MAU-2	221.9	3/4"	3/4"
TOTAL	667.2	EQUIVALENT LENGTH = 100 FT PRESSURE = 2 PSI MAIN SIZE = 1"Ø	

NOTE: GAS SIZES TO EQUIPMENT ARE AS NOTED IN SCHEDULE ABOVE. ROUTE NOTED (2-PSI) GAS LINE TO GAS EQUIPMENT. PROVIDE GAS COCK AND PRESSURE REGULATOR (2 PSI-7" WC) SIZED FOR GAS LOAD AT EACH PIECE OF EQUIPMENT. VENT TO ATMOSPHERE PER MANUFACTURERS RECOMMENDATIONS. ROUTE NOTED (7" WC) GAS LINE TO GAS FIRED EQUIPMENT WITH GAS COCK AND FLEX CONNECTOR AT UNIT. SEE GAS CONNECTION DETAILS.

MUSGROVE ENGINEERING, P.A.
234 S. Whisperwood Way
Boise, ID 83709
208.384.0585
645 West 25th Street
Idaho Falls, ID 83402
208.523.2862
www.musgrovepa.com
PROJECT NO. 22-455

MILLER STAUFFER ARCHITECTS
601 E. FRONT AVE., STE 201
COEUR D' ALENE, IDAHO 83814
P 208.664.1773 F 208.667.3174
WWW.MILLERSTAUFFER.COM

LICENSED ARCHITECT AR-1050
MONTE J. MILLER
STATE OF IDAHO

PROFESSIONAL ENGINEER LICENSED 16683 2/10/2023 STATE OF IDAHO CHRISTOPHER DYKE

PLUMBING SCHEDULES

Preliminary
10-6-2022

Powell Station Maintenance Facility
Highway 12
Powell Station, Idaho

No.	Description	Date

PROJECT NUMBER 2206
PRINCIPAL Designer
PROJECT MANAGER Author

P3.0

2/10/2023 5:00:34 PM Autodesk Docs://ITD Powell Maintenance Facility/22-455 ITD POWELL STATION MAINTENANCE MEP 123.rvt

ELECTRICAL LEGEND - LIGHTING

REFERENCE FIXTURE SCHEDULE FOR MOUNTING TYPE, MOUNTING HEIGHT, AND FIXTURE TYPE.

- DOUBLE FACE EXIT SIGN, CEILING MOUNTED, PROVIDE UNSWITCHED CONDUCTOR.
- WALL MOUNTED DOUBLE FACE EXIT SIGN PROVIDE UNSWITCHED CONDUCTOR. MOUNT AT +8'-0" UNO.
- SINGLE FACE EXIT SIGN, CEILING MOUNTED PROVIDE UNSWITCHED CONDUCTOR.
- WALL MOUNTED SINGLE FACE EXIT SIGN PROVIDE UNSWITCHED CONDUCTOR. MOUNT AT +8'-0" UNO.
- ARROW INDICATES DIRECTION TO BE SHOWN ON SIGN.
- 1'X1' LIGHT FIXTURE.
- 1'X1' LIGHT FIXTURE, PROVIDE EMERGENCY BATTERY BACKUP CONNECTED TO AN UNSWITCHED CONDUCTOR.
- TRACK LIGHT
- 1'X4' LIGHT FIXTURE.
- 1'X4' LIGHT FIXTURE, PROVIDE EMERGENCY BATTERY BACKUP CONNECTED TO AN UNSWITCHED CONDUCTOR.
- 2'X4' LIGHT FIXTURE.
- 2'X4' LIGHT FIXTURE, PROVIDE EMERGENCY BATTERY BACKUP CONNECTED TO AN UNSWITCHED CONDUCTOR.
- 2'X2' LIGHT FIXTURE.
- 2'X2' LIGHT FIXTURE, PROVIDE EMERGENCY BATTERY BACKUP CONNECTED TO AN UNSWITCHED CONDUCTOR.
- DIRECT/INDIRECT LIGHT FIXTURE. SEE SCHEDULE FOR LENGTH.
- DIRECT/INDIRECT LIGHT FIXTURE. SEE SCHEDULE FOR LENGTH. PROVIDE EMERGENCY BATTERY BACKUP CONNECTED TO AN UNSWITCHED CONDUCTOR
- STRIP LIGHT FIXTURE. SEE SCHEDULE FOR LENGTH.
- STRIP LIGHT FIXTURE. SEE SCHEDULE FOR LENGTH. PROVIDE EMERGENCY BATTERY BACKUP CONNECTED TO AN UNSWITCHED CONDUCTOR
- WALL MOUNTED LIGHT FIXTURE.
- WALL MOUNTED LIGHT FIXTURE, PROVIDE EMERGENCY BATTERY BACKUP CONNECTED TO AN UNSWITCHED CONDUCTOR.
- RECESSED LIGHT FIXTURE
- RECESSED LIGHT FIXTURE. PROVIDE EMERGENCY BATTERY BACKUP CONNECTED TO AN UNSWITCHED CONDUCTOR.
- ROUND LIGHT FIXTURE
- ROUND EMERGENCY LIGHT FIXTURE. PROVIDE EMERGENCY BATTERY BACKUP CONNECTED TO AN UNSWITCHED CONDUCTOR.
- WALL MOUNTED LIGHT FIXTURE.
- WALL MOUNTED EMERGENCY LIGHT FIXTURE. PROVIDE EMERGENCY BATTERY BACKUP CONNECTED TO AN UNSWITCHED CONDUCTOR.
- POLE LIGHT 1 HEAD WITH POLE
- TIME CLOCK
- PHOTO CONTROL CELL LOCATED 12" ABOVE ROOF FACING NORTH.
- OCCUPANCY SENSOR. PROVIDE RELAYS AND POWER PACKS AS REQUIRED.
- LED DRIVER
- EMERGENCY EGRESS LIGHTING WITH OUT FIXTURE HEADS. CONNECT TO AN UNSWITCHED CONDUCTOR.
- EMERGENCY EGRESS LIGHTING. CONNECT TO AN UNSWITCHED CONDUCTOR.
- WALL MOUNTED SINGLE FACE EXIT SIGN WITH EMERGENCY EGRESS LIGHTING. PROVIDE UNSWITCHED CONDUCTOR. MOUNT AT +8'-0" UNO.
- CEILING MOUNTED. SINGLE FACE EXIT SIGN WITH EMERGENCY EGRESS LIGHTING. PROVIDE UNSWITCHED CONDUCTOR.
- CEILING MOUNTED. DOUBLE FACE EXIT SIGN WITH EMERGENCY EGRESS LIGHTING. PROVIDE UNSWITCHED CONDUCTOR.
- XXX — INDICATES FIXTURE TYPE. REFER TO FIXTURE SCHEDULE.
- EXTERIOR WALL PACK
- EMERGENCY EXTERIOR WALL PACK. PROVIDE EMERGENCY BATTERY BACKUP CONNECTED TO AN UNSWITCHED CONDUCTOR

DEVICES

- S — SWITCH, TYPE AS INDICATED. +46"AFF
  - 2 DOUBLE POLE
  - 3 3-WAY
  - 4 4-WAY
  - K KEYED
  - P PILOT LIGHT
  - D DIMMER
  - HP HORSEPOWER RATED
  - TO THERMAL OVERLOAD
  - LV LOW VOLTAGE
  - OS OCCUPANCY SENSOR
  - OR LOW VOLTAGE, MOMENTARY OVERRIDE
  - VS VACANCY SENSOR
  - a SUPERSCRIPT INDICATES LIGHTS TO BE SWITCHED TOGETHER
- DUAL LEVEL SWITCHING, INSIDE AND OUTSIDE LAMPS OF FIXTURE TO BE SWITCHED SEPARATELY.
- DUAL LEVEL SWITCHING WITH OCCUPANCY SENSOR, INSIDE AND OUTSIDE LAMPS OF FIXTURE TO BE SWITCHED SEPARATELY.
- OCCUPANCY SENSOR WITH MANUAL DIMMING, SET FOR 50% AUTOMATIC ON, AUTOMATIC OFF, WITH MANUAL DIMMING.
- SINGLE CONVENIENCE OUTLET, +18" AFF UNO
- FLOOR MOUNT SINGLE CONVENIENCE OUTLET
- DUPLEX CONVENIENCE OUTLET, +18" AFF UNO
- FLOOR MOUNT DUPLEX CONVENIENCE OUTLET
- EMERGENCY DUPLEX CONVENIENCE OUTLET, +18" AFF UNO
- SWITCHED DUPLEX CONVENIENCE OUTLET, +18" AFF UNO
- FLOOR MOUNTED SWITCHED DUPLEX CONVENIENCE OUTLET
- USB DUPLEX CONVENIENCE OUTLET, +18" AFF UNO
- USB FOURPLEX CONVENIENCE OUTLET, +18" AFF UNO
- FOURPLEX CONVENIENCE OUTLET. +18"AFF UNO
- FLOOR MOUNT FOURPLEX CONVENIENCE OUTLET
- CONNECTION POINT TO EQUIPMENT SPECIFIED, ELECTRICAL CONTRACTOR TO SUPPLY RACEWAY AND CONDUCTORS AND MAKE FINAL CONNECTION TO EQUIPMENT UNDER THIS SECTION. UNO
- FLOOR MOUNTED CONNECTION POINT, SEE NOTE ABOVE FOR REQUIREMENTS
- FLOOR MOUNTED JUNCTION BOX
- JUNCTION BOX
- WALL MOUNTED PUSH BUTTON, MOUNT AT SWITCH HEIGHT UNO
- HC — WALL MOUNTED PUSH BUTTON, HANDICAPPED MOUNT AT SWITCH HEIGHT UNO
- WALL MOUNTED PUSH BUTTON, MOUNT AT SWITCH HEIGHT UNO
- MOTOR STARTER/CONTACTOR, SIZE/POLES NEMA 1 UNO AS INDICATED
- COMBINATION STARTER AND DISCONNECT, SIZE/POLES, STARTER SIZE AS INDICATED, NEMA 1 UNO
- F — FUSED DISCONNECT SWITCH, SIZE/POLES, FUSE SIZES AS INDICATED, NEMA 1 UNO
- NON-FUSED DISCONNECT SIZE/ POLES AS INDICATED, NEMA 1 UNO
- T [unit#] — THERMOSTAT, +46" AFF PROVIDE CONDUIT, J-BOX, CONDUCTORS AS REQUIRED TO CONTROL ASSOCIATED UNITS. UNO COORDINATE WITH DIVISION 15.
- H [unit#] — HUMIDISTAT, +46" AFF PROVIDE CONDUIT, J-BOX, CONDUCTORS AS REQUIRED TO CONTROL ASSOCIATED UNITS.
- POWER POLE - DUAL CHANNEL
- REB — RECESSED ENTERTAINMENT BOX
- T — TRANSFORMER
- PANELBOARD. SEE SCHEDULE FOR TYPE.
- EQUIPMENT CABINET, SURFACE MOUNTED
- EQUIPMENT CABINET FLUSH MOUNTED
- SURFACE MULTI-OUTLET RACEWAY
- # / # — MECHANICAL EQUIPMENT CALL OUT
- # — KITCHEN EQUIPMENT CALLOUT

ONE LINE

- DELTA WYE TRANSFORMER UNO
- # PANEL NAME VOLTAGE PHASE — PANEL BOARD, SEE SCHEDULE FOR TYPE AND SIZE
- ##A #P — CIRCUIT BREAKER, SIZE AND POLES INDICATED
- ##A — FUSE, SIZE AND TYPE INDICATED, PROVIDE FUSE FOR EACH POLE
- ##A #P — INTERRUPTER SWITCH, SIZE AND POLES INDICATED
- ##A #P — FUSED SWITCH, SIZE/POLES AND FUSE SIZE INDICATED
- ##A #P — DRAW OUT CIRCUIT BREAKER, SIZE AND POLES INDICATED
- INDIVIDUAL BREAKER WITH SHUNT TRIP, SIZE AND POLES INDICATED. NEMA 1 UNO
- INDIVIDUAL BREAKER, SIZE AND POLES INDICATED. NEMA 1 UNO
- GFP — GROUND FAULT PROTECTION
- TVSS — TRANSIENT VOLTAGE SURGE SUPPRESSION
- LSIGR — ADJUSTABLE BREAKER SETTINGS (PER SPECIFICATIONS):
  - 'L'-LONG TIME
  - 'S'-SHORT TIME
  - 'I'-INSTANTANEOUS
  - 'G'-GROUND FAULT
  - 'R'-ENERGY REDUCING MAINTENANCE SWITCH W/STATUS INDICATOR
- GROUND
- ST — SHUNT TRIP COIL
- M — MOTOR
- 100A 3P — DISCONNECT SWITCH, SIZE AND POLES INDICATED. NEMA 1 UNO
- OVERHEAD SERVICE DROP
- G E — GENERATOR SET, MAIN BREAKER SIZE INDICATED
- AUTOMATIC TRANSFER SWITCH (ATS)
- METER AND BASE
- N — NEUTRAL
- T — DRY TYPE TRANSFORMER
- PAD MOUNT TRANSFORMER

COMMUNICATIONS

- JUNCTION BOX FOR FUTURE TELEPHONE/DATA OUTLET. MOUNT AT 18" A.F.F. UNO. PROVIDE SINGLE-GANG MUD RING WITH BLANK COVER PLATE. PROVIDE 1" CONDUIT TO NEAREST ACCESSIBLE CEILING SPACE.
- #D,#T — TELEPHONE/DATA OUTLET. MOUNT AT 18" A.F.F. UNO. PROVIDE 1" CONDUIT TO NEAREST ACCESSIBLE CEILING. INSTALL QUANTITY OF DATA (#D) AND TELEPHONE (#T) CABLES INDICATED TO THE NEAREST DATA RACK. PROVIDE (2) DATA CABLES IF A CABLE QUANTITY IS NOT INDICATED.
- FLOOR MOUNTED BOX FOR FUTURE TELEPHONE/DATA OUTLET. JUNCTION BOX WITH SINGLE-GANG MUD RING. PROVIDE 1" CONDUIT TO NEAREST ACCESSIBLE CEILING SPACE. PROVIDE BLANK COVER PLATE.
- #D,#T — FLOOR MOUNTED TELEPHONE/DATA OUTLET. PROVIDE 1" CONDUIT TO NEAREST ACCESSIBLE CEILING. INSTALL QUANTITY OF DATA (#D) AND TELEPHONE (#T) CABLES INDICATED TO THE NEAREST DATA RACK. PROVIDE (2) DATA CABLES IF A CABLE QUANTITY IS NOT INDICATED.
- IC — INTERCOM SYSTEM CALL BUTTON. +46" UNO.
- SP — CEILING MOUNTED SPEAKER WITH BACKBOX
- SP — WALL MOUNTED SPEAKER, WITH BACKBOX +80" UNO
- V — VOLUME CONTROL, +46" UNO
- TV — TELEVISION OUTLET, +18" AFF UNO. PROVIDE 1-1/4" CONDUIT TO NEAREST ACCESSIBLE CEILING SPACE
- TV — CEILING MOUNTED TELEVISION OUTLET
- TTB — TELEPHONE TERMINAL BOARD
- CT-XX — CABLE TRAY, 4" DEEP, WIRE BASKET STYLE, 'XX' INDICATES WIDTH PROVIDE ALL FITTINGS AND SUPPORT HARDWARE REQUIRED

NOTE: THIS IS A STANDARD LIST OF COMMONLY USED ELECTRICAL SYMBOLS. SOME OF THE SYMBOLS SHOWN MAY NOT HAVE BEEN USED IN THIS DRAWING PACKAGE.

ELECTRICAL ABBREVIATIONS

A	AMPERES
AC	6" ABOVE BACKSPLASH
AFF	ABOVE FINISHED FLOOR
AFG	ABOVE FINISHED GRADE
AF	AMP FRAME
AIC	AMPS INTERRUPTING CAPACITY
AT	AMP TRIP
ATS	AUTOMATIC TRANSFER SWITCH
AWG	AMERICAN WIRE GAUGE
BD	BOTTOM OF DECK
BS	BOTTOM OF STRUCTURE
C	CEILING MOUNTED
C	CONDUIT
CB	CIRCUIT BREAKER
CF	COMPACT FLUORESCENT
CKT	CIRCUIT
CO	CONDUIT ONLY. PROVIDE PULL-LINE
CT	CURRENT TRANSFORMER
CTL	CONTROL
DC	DIRECT CURRENT
(D)	DEMOLITION
DEMO	DEMOLITION
DET	DETAIL
DTT	DOUBLE TWIN TUBE
E	EMERGENCY
(E)	EXISTING
EC	ELECTRICAL CONTRACTOR
EL	EMERGENCY LIGHT
F	FUSE
(F)	FUTURE
FACP	FIRE ALARM CONTROL PANEL
G/GND	GROUND
GFCI	GROUND FAULT CIRCUIT INTERRUPTER
GFI	GROUND FAULT INTERRUPTER
HH	HAND HOLE
HID	HIGH INTENSITY DISCHARGE
HOA	HAND-OFF-AUTO
HPS	HIGH PRESSURE SODIUM
HVAC	HEATING, VENTILATION, & AIR CONDITIONING
IG	ISOLATED GROUND
IPCO	IDAHO POWER COMPANY
J-BOX	JUNCTION BOX
KA	KILOAMP
KVA	KILO VOLT-AMP
KW	KILOWATT
KWH	KILOWATT HOUR
LCP	LIGHTING CONTROL PANEL
MB	MAIN BREAKER
MBR	MAIN CIRCUIT BREAKER
MCC	MOTOR CONTROL CENTER
MDP	MAIN DISTRIBUTION PANEL
MLO	MAIN LUGS ONLY
MMC	MODULAR METERING CENTER
MH	METAL HALIDE
MSB	MAIN SWITCH BOARD
MTG	MOUNTING
N	NEUTRAL
(N)	NEW
NC	NORMALLY CLOSED
NEC	NATIONAL ELECTRICAL CODE
NIC	NOT IN CONTRACT
NL	NIGHT LIGHT
NO	NORMALLY OPEN
NTS	NOT TO SCALE
OH	OVERHEAD
OS	OCCUPANCY SENSOR
P	POLES
PC	PHOTO-CONTROL
PVC	POLYVINYL CHLORIDE
PWR	POWER
RE:	REFERENCE
REC	RECEPTACLE
(R)	RELOCATED
SF	SQUARE FEET
TBD	TO BE DETERMINED
TDR	TIME DELAY RELAY
TK	TOE KICK
TSP	TWISTED SHIELDED PAIR
TRT	TRIPLE TUBE
TTB	TELEPHONE TERMINAL BOARD
(TYP.)	TYPICAL
UC	UNDERCABINET
UG	UNDERGROUND
U.N.O.	UNLESS NOTED OTHERWISE
V	VOLT
VA	VOLT-AMPERE
W	WATT
WG	WIRE GUARD
WP	WEATHER PROOF/NEMA 3R
PROVIDED/ PROVIDE BY INSTALLED/ INSTALL	PROVIDE AND INSTALL / PROVIDED AND INSTALLED BY / PROVIDE AND INSTALL
NOTE:	THIS IS A STANDARD LIST OF COMMONLY USED ELECTRICAL ABBREVIATIONS. SOME OF THE ABBREVIATIONS SHOWN ABOVE MAY NOT BE USED IN THIS DRAWING PACKAGE.

CIRCUITING SYMBOLS

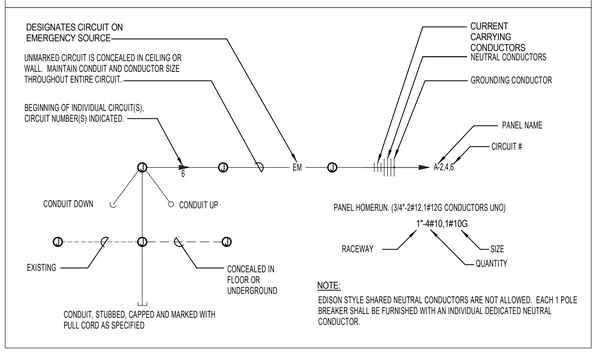

NOTE:
EDISON STYLE SHARED NEUTRAL CONDUCTORS ARE NOT ALLOWED. EACH 1 POLE BREAKER SHALL BE FURNISHED WITH AN INDIVIDUAL DEDICATED NEUTRAL CONDUCTOR.

SECURITY

- CCTV CAMERA POWER SUPPLY
- CCTV SYSTEM POWER SUPPLY
- ADJUSTABLE CAMERA (PAN/TILT/ZOOM)
- FIXED CAMERA
- CAMERA IN OUTDOOR HOUSING
- ADJUSTABLE CAMERA (PAN/TILT/ZOOM) IN OUTDOOR HOUSING
- C — CCTV OUTLET, +18" UNO
- C — CEILING MOUNTED CCTV OUTLET
- K — SECURITY SYSTEM KEYPAD CONTROLLER COORDINATE BOX SIZE AND MUDRING WITH VENDOR
- CR — CARD READER
- M — CEILING MOUNTED MOTION SENSOR
- M +80" — WALL MOUNTED MOTION SENSOR, MOUNTING HEIGHT INDICATED
- PANIC BUTTON - MOUNTED UNDER COUNTER

PROFESSIONAL ENGINEER REGISTERED 13299 02/10/2023 STATE OF IDAHO MATTHEW N. BRADLEY

MUSGROVE ENGINEERING, P.A.
234 S. Whisperwood Way
Boise, ID 83709
208.384.0585
645 West 25th Street
Idaho Falls, ID 83402
208.523.2862
www.musgrovepa.com

PROJECT NO. 22-455

ELECTRICAL GENERAL NOTES

A. THESE ELECTRICAL DRAWINGS ARE DIAGRAMMATIC IN NATURE; THEREFORE, THE ELECTRICAL CONTRACTOR SHALL COORDINATE ALL ELECTRICAL EQUIPMENT AND DEVICE LOCATIONS WITH ARCHITECTURAL, MECHANICAL, AND PLUMBING DIVISIONS PRIOR TO ROUGH-IN. REFER TO AND COORDINATE WITH ARCHITECTURAL, MECHANICAL, AND PLUMBING DRAWINGS FOR ADDITIONAL WORK THAT IS REQUIRED BY THE ELECTRICAL CONTRACTOR.

B. ALL CONDUIT AND JUNCTION BOXES ARE TO BE CONCEALED UNLESS LOCATED WITHIN DEDICATED ELECTRICAL OR MECHANICAL ROOMS. USE OF SURFACE MOUNTED RACEWAYS IN ALL OTHER SPACES MUST BE APPROVED BY THE ARCHITECT FOR EACH LOCATION. WHERE SURFACE RACEWAYS ARE APPROVED, UTILIZE WIREMOLD, OR APPROVED EQUAL. SURFACE MOUNTED RACEWAYS PAINTED TO MATCH SURROUNDING WALLS.

C. REFER TO ARCHITECTURAL ELEVATIONS FOR OUTLET HEIGHTS WHERE THE SPECIFIC OUTLET HEIGHT IS NOT INDICATED. REFER TO THE ELECTRICAL LEGEND FOR THE DEFAULT OUTLET HEIGHT WHEN NOT INDICATED ON ELEVATIONS OR ON AT THE DEVICES.

D. PROVIDE PULL-LINE IN ALL EMPTY CONDUITS.

E. TERMINATE ALL LOW-VOLTAGE CONDUITS WITH INSULATED THROAT BUSHING.

F. MECHANICAL EQUIPMENT INDICATED IS SHOWN IN AN APPROXIMATE LOCATION. COORDINATE EXACT LOCATION WITH MECHANICAL CONTRACTOR PRIOR TO ROUGH-IN.

SITE:

G. CONTRACTOR SHALL COORDINATE WITH AN UNDERGROUND LOCATING SERVICE PRIOR TO COMMENCING WORK. SEE CIVIL DRAWINGS FOR ADDITIONAL SITE INFORMATION. COORDINATE WITH OTHER SITE DISCIPLINES.

H. SITE LIGHTING AND UTILITY EQUIPMENT SHOWN IN APPROXIMATE LOCATION. COORDINATE EXACT LOCATION WITH CIVIL DRAWINGS, PROPERTY LINES, AND UTILITY COMPANIES PRIOR TO ROUGH-IN.

I. REFER TO POLE BASE DETAIL FOR SITE LIGHTING POLE BASE REQUIREMENTS.

J. ROUTE CONDUITS IN COMMON TRENCH WHERE POSSIBLE REFER TO TRENCHING DETAIL.

MILLER STAUFFER ARCHITECTS
601 E. FRONT AVE., STE 201
COEUR D' ALENE, IDAHO 83814
P 208.664.1773 F 208.667.3174
WWW.MILLERSTAUFFER.COM

ELECTRICAL COVER SHEET

Powell Station Maintenance Facility

Highway 12
Powell Station, Idaho

Permit / Bid Set
2-10-2023

LICENSED ARCHITECT AR-1050 MONTE J. MILLER STATE OF IDAHO

No.	Description	Date

PROJECT NUMBER 2206
PRINCIPAL Designer
PROJECT MANAGER Author

E0.0

2/10/2023 6:15:16 PM Autodesk Docs://ITD Powell Maintenance Facility/22-455 ITD POWELL STATION MAINTENANCE MEP /23.rvt

COMcheck Software Version 4.1.5.5

Interior Lighting Compliance Certificate

Project Information

Energy Code: 2018 IECC
Project Title: POWELL MAINTENANCE BUILDING
Project Type: New Construction

Construction Site:
Owner/Agent:
Designer/Contractor:
MATTHEW N. BRADLEY
MUSGROVE ENGINEERING
645 W 25TH ST
IDAHO FALLS, ID 83402
208-523-2862
mattb@musgrovepa.com

Additional Efficiency Package(s)

Credits: 1.0 Required 1.0 Proposed
High Performance SWH, 1.0 credit

Allowed Interior Lighting Power

A Area Category	B Floor Area (ft2)	C Allowed Watts / ft2	D Allowed Watts (B X C)
1-MAINTENANCE BUILDING (Workshop)	7654	0.90	6889
		Total Allowed Watts =	6889

Proposed Interior Lighting Power

A Fixture ID : Description / Lamp / Wattage Per Lamp / Ballast	B Lamps/ Fixture	C # of Fixtures	D Fixture Watt.	E (C X D)
1-MAINTENANCE BUILDING (Workshop)				
LED 1: A/A1: 4FT LED DIRECT/INDIRECT: Other:	1	8	80	640
LED 2: B: LED WRAP: Other:	1	11	32	352
LED 3: C: LED HIGH BAY: Other:	1	16	221	3536
LED 4: D: LED HIGH PRESSURE HOSE DOWN: Other:	1	8	115	920
LED 5: F: LED STRIP LIGHT: Other:	1	6	35	210
LED 6: G: 8FT LED DIRECT/INDIRECT: Other:	1	8	104	832
			Total Proposed Watts =	6490

Interior Lighting PASSES: Design 6% better than code

Interior Lighting Compliance Statement

Compliance Statement: The proposed interior lighting design represented in this document is consistent with the building plans, specifications, and other calculations submitted with this permit application. The proposed interior lighting systems have been designed to meet the 2018 IECC requirements in COMcheck Version 4.1.5.5 and to comply with any applicable mandatory requirements listed in the Inspection Checklist.

MATTHEW N. BRADLEY — Name - Title
Signature
02/10/23 — Date

Project Title: POWELL MAINTENANCE BUILDING
Data filename: P:\Files\2022\22455\CALCS\ELEC\22455 Electrical_Compliance.cck
Report date: 02/10/23
Page 1 of 8

COMcheck Software Version 4.1.5.5

Exterior Lighting Compliance Certificate

Project Information

Energy Code: 2018 IECC
Project Title: POWELL MAINTENANCE BUILDING
Project Type: New Construction
Exterior Lighting Zone: 2 (Light industrial area with limited nighttime use (LZ2))

Construction Site:
Owner/Agent:
Designer/Contractor:
MATTHEW N. BRADLEY
MUSGROVE ENGINEERING
645 W 25TH ST
IDAHO FALLS, ID 83402
208-523-2862
mattb@musgrovepa.com

Allowed Exterior Lighting Power

A Area/Surface Category	B Quantity	C Allowed Watts / Unit	D Tradable Wattage	E Allowed Watts (B X C)
bay doors & man doors (Pedestrian and vehicular entrances and exits)	142 ft of	14	Yes	1988
			Total Tradable Watts (a) =	1988
			Total Allowed Watts =	1988
			Total Allowed Supplemental Watts (b) =	400

(a) Wattage tradeoffs are only allowed between tradable areas/surfaces.
(b) A supplemental allowance equal to 400 watts may be applied toward compliance of both non-tradable and tradable areas/surfaces.

Proposed Exterior Lighting Power

A Fixture ID : Description / Lamp / Wattage Per Lamp / Ballast	B Lamps/ Fixture	C # of Fixtures	D Fixture Watt.	E (C X D)
bay doors & man doors (Pedestrian and vehicular entrances and exits 142 ft of door width): Tradable Wattage				
LED 1: X1: LED WALL PACK: Other:	1	8	47	376
LED 2: X2: LED WALL PACK: Other:	1	7	24	168
			Total Tradable Proposed Watts =	544

Exterior Lighting PASSES: Design 77% better than code

Exterior Lighting Compliance Statement

Compliance Statement: The proposed exterior lighting design represented in this document is consistent with the building plans, specifications, and other calculations submitted with this permit application. The proposed exterior lighting systems have been designed to meet the 2018 IECC requirements in COMcheck Version 4.1.5.5 and to comply with any applicable mandatory requirements listed in the Inspection Checklist.

MATTHEW N. BRADLEY — Name - Title
Signature
02/10/23 — Date

Project Title: POWELL MAINTENANCE BUILDING
Data filename: P:\Files\2022\22455\CALCS\ELEC\22455 Electrical_Compliance.cck
Report date: 02/09/23
Page 2 of 8

ENERGY CODE COMMISSIONING COMPLIANCE NOTES

SECTION 408 SYSTEM COMMISSIONING

IT SHALL BE THE ELECTRICAL CONTRACTOR'S RESPONSIBILITY TO PROVIDE ALL BELOW NOTED DOCUMENTS WITHIN 90 DAYS OF CERTIFICATE OF OCCUPANCY:

A. AS-BUILT DRAWINGS - DRAWINGS SHALL INCLUDE THE LOCATION AND PERFORMANCE DATA OF ALL PIECES OF MECHANICAL EQUIPMENT.

B. OPERATING AND MAINTENANCE MANUALS - MANUALS SHALL INCLUDE THE FOLLOWING:

1. SUBMITTAL DATA ON ALL PIECES OF EQUIPMENT REQUIRING MAINTENANCE.
2. MANUFACTURER'S OPERATIONS AND MAINTENANCE DATA ON ALL PIECES OF EQUIPMENT. ROUTINE MAINTENANCE ACTIONS SHALL BE CLEARLY IDENTIFIED.
3. NAME AND ADDRESS AND PHONE NUMBER OF OF AT LEAST ONE (1) SERVICE PROVIDED.
4. LIGHTING CONTROL SYSTEMS MAINTENANCE AND CALIBRATION INFORMATION INCLUDING WIRING DIAGRAMS, EQUIPMENT AND SYSTEM SCHEMATICS, AND CONTROL SEQUENCES OF OPERATIONS. DESIRED OR FIELD DETERMINED SETPOINTS SHALL BE PERMANENTLY RECORDED ON CONTROL DRAWINGS AT ALL CONTROL DEVICES, OR FOR DIGITAL CONTROL SYSTEMS, IN THE SYSTEM PROGRAMMING INSTRUCTIONS.
5. A NARRATIVE ON HOW EACH LIGHTING SYSTEM IN INTENDED TO OPERATE, INCLUDING RECOMMENDED SETPOINTS.

C. LIGHTING SYSTEM FUNCTIONAL TESTING REQUIREMENTS

FUNCTIONAL TESTING - ALL AUTOMATIC LIGHTING CONTROL SYSTEM SHALL BE FULLY TESTED TO ENSURE THE CONTROL HARDWARE AND SOFTWARE ARE CALIBRATED, ADJUSTED, P[ROGRAMMED, AND IN PROPER WORKING CONDITION IN ACCORDANCE WITH THE CONSTRUCTION DOCUMENTS AND MANUFACTURER'S INSTALLATION INSTRUCTIONS.

WHERE OCCUPANT SENSORS, TIME SWITCHES, PROGRAMMABLE CONTROLS, PHOTOSENSORS OR DAYLIGHTING CONTROLS ARE INSTALLED, THE FOLLOWING PROCEDURES SHALL BE PREFORMED:

1. CONFIRM THAT THE PLACEMENT, SENSITIVITY AND TIME-OUT ADJUSTMENTS FOR OCCUPANT SENSORS YIELD ACCEPTABLE PERFORMANCE.
2. CONFIRM THAT THE TIME SWITCHES AND PROGRAMMABLE SCHEDULE CONTROLS ARE PROGRAMMED TO TURN THE LIGHTS OFF.
3. CONFIRM THAT THE PLACEMENT AND SENSITIVITY ADJUSTMENTS FOR PHOTOSENSOR CONTROLS REDUCE ELECTRIC LIGHT BASED ON THE AMOUNT OF USABLE DAYLIGHT IN THE SPACE AS SPECIFIED.

D. FINAL LIGHTING SYSTEM FUNCTIONAL REPORT - A REPORT OF TEST PROCEDURES AND RESULTS IDENTIFIED AS THE "FINAL LIGHTING CONTROL REPORT" SHALL BE DELIVERED TO THE BUILDING OWNER. THE REPORT SHALL INCLUDE THE FOLLOWING:

1. LIST OF FUNCTIONAL TESTS USED DURING THE COMMISSIONING PROCESS ON EACH PIECE OF EQUIPMENT.
2. RESULTS OF ALL FUNCTIONAL TESTS ON ALL PIECES OF EQUIPMENT.
3. LIST OF DEFICIENCIES FOUND AND CORRESPONDING CORRECTIVE MEASURES EITHER IMPLEMENTED OR PROPOSED ON EACH PIECE OF EQUIPMENT.
4. LIST OF EQUIPMENT NOT ABLE TO BE FUNCTIONALLY TESTED DUE TO CURRENT CLIMATE CONDITIONS. THESE PIECES OF EQUIPMENT WILL FUNCTIONALLY TESTED ONCE CLIMATE CHANGES ALLOW.

PROFESSIONAL ENGINEER REGISTERED 13299 02/10/2023 STATE OF IDAHO MATTHEW N. BRADLEY

MUSGROVE ENGINEERING, P.A.
234 S. Whisperwood Way
Boise, ID 83709
208.384.0585
645 West 25th Street
Idaho Falls, ID 83402
208.523.2862
www.musgrovepa.com
PROJECT NO. 22-455

LIGHTING FIXTURE SCHEDULE (22-455)

TYPE	DESCRIPTION	MTG.	LAMPS	WATTS	MFG. & CATALOG NUMBER	OR EQUAL BY	NOTES
A	120V, 4FT LED DIRECT/INDIRECT 80CRI	SUSPENDED +114	LED 4000K	80.7	PEERLESS NO. 10CRM4L-LLP-4FT-MSL4-80CRI-SSH-40K-1300LMF/1000LMF-DARK-ZT-120-SCT-F2/48A-C210	LIGHTOLIER METALUX H.E. WILLIAMS	1
A1	120V, LED DIRECT/INDIRECT 80CRI 10W BATTERY BACKUP	SUSPENDED +114	LED 4000K	80.7	PEERLESS NO. 10CRM4L-LLP-4FT-MSL4-80CRI-SSH-40K-1300LMF/1000LMF-DARK-ZT-120-SCT--E10WLCP-F2/48A-C210	LIGHTOLIER METALUX H.E. WILLIAMS	1
B	120-277V, LED CURVED BASKET WRAPAROUND 4,253 LUMENS, 82CRI	SURFACE	LED 4000K	32	LITHONIA NO. LBL4-LP840	LIGHTOLIER METALUX H.E. WILLIAMS	1
B1	120-277V, LED CURVED BASKET WRAPAROUND 4,253 LUMENS, 82CRI EMERGENCY SELF-DIAGNOSTIC BATTERY PACK	SURFACE	LED 4000K	32	LITHONIA NO. LBL4-4000LM-80CRI-40K-MIN10--MVOLT-E10WLCP	LIGHTOLIER METALUX H.E. WILLIAMS	1
C	MVOLT, LED HIGH BAY 25,257 LUMENS, 80CRI	SUSPENDED +16FT	LED 4000K	221	LITHONIA NO. IBHST-24000LM-SD080-MD-MVOLT-DZ10-40K-80CRI-WH	LIGHTOLIER METALUX H.E. WILLIAMS	1
D	MVOLT, LED HIGH PRESSURE HOSE DOWN 20,048 LUMENS, 80CRI	SURFACE	LED 4000K	115	LITHONIA NO. FHE-L48-18000LM-ACL-MD-MVOLT-GZ10-40K-80CRI	LIGHTOLIER METALUX H.E. WILLIAMS	1
EX1	120-277V, LED EXIT/EMERGENCY COMBO GREEN FACE	WALL +96	LED 4000K	3	LITHONIA NO. LHQM-LED-G	LIGHTOLIER METALUX H.E. WILLIAMS	1
EX2	120-277V, LED EXIT/EMERGENCY LIGHT COMBO GREEN FACE	WALL +96	LED 4000K	3	LITHONIA NO. LHQM-LED-G-HO	LIGHTOLIER METALUX H.E. WILLIAMS	1
EX3	120-277V, LED EXIT/EMERGENCY LIGHT COMBO GREEN FACE WET LOCATION RATED	WALL +96	LED 4000K	5.7	LITHONIA NO. WLTC-1-G-CW	LIGHTOLIER METALUX H.E. WILLIAMS	1
F	MVOLT, LED STRIP LIGHT 80CRI	WALL +108	LED 4000K	35.3	LITHONIA NO. CSS-L48-4000LM-MVOLT-40K-80CRI	LIGHTOLIER METALUX H.E. WILLIAMS	1
G	120V, 8FT LED DIRECT/INDIRECT 80CRI	SUSPENDED +114	LED 4000K	161.4	PEERLESS NO. 10CRM4L-LLP-8FT-MSL4-80CRI-SSH-40K-1300LMF/1000LMF-DARK-ZT-120-SCT-F2/48A-C210	LIGHTOLIER METALUX H.E. WILLIAMS	1
H	120V, 24 INCH LED UNDER CABINET FIXTURE 90CRI	UNDER CABINET	LED 3000K	18.3	LITHONIA NO. RAZ-24IN-30K-90CRI	LIGHTOLIER METALUX H.E. WILLIAMS	1
H1	120V, 18 INCH LED UNDER CABINET FIXTURE 90CRI	UNDER CABINET	LED 3000K	13.1	LITHONIA NO. RAZ-18IN-30K-90CRI	LIGHTOLIER METALUX H.E. WILLIAMS	1
H2	120V, 12 INCH LED UNDER CABINET FIXTURE 90CRI	UNDER CABINET	LED 3000K	10	LITHONIA NO. RAZ-12IN-30K-90CRI	LIGHTOLIER METALUX H.E. WILLIAMS	1
J	120V, LED SWITCHABLE FLUSH MOUNT 695 LUMENS SHOWER LIGHT	RECESSED	LED 30K/40K/50K	12.2	LITHONIA NO. FMMLS-7-SWW2-M6	LIGHTOLIER METALUX H.E. WILLIAMS	1
X1	120/277V, LED WALL PACK 6,000 LUMENS DARK BRONZE	WALL	LED 4000K	47	LITHONIA NO. WPX2-LED-40K-MVOLT-DDBXD-M2	LIGHTOLIER METALUX H.E. WILLIAMS	1
X2	120/277V, LED WALL PACK 2,900 LUMENS DARK BRONZE	WALL	LED 4000K	24	LITHONIA NO. WPX1-LED-P2-40K-MVOLT-DDBXD-M4	LIGHTOLIER METALUX H.E. WILLIAMS	1

LIGHTING FIXTURE SCHEDULE NOTES:
1 SUBSTITUTIONS WILL BE ALLOWED IF SUBMITTED PRIOR TO BID DATE BY THE GREATER OF: 7 BUSINESS DAYS OR THE TIME PERIOD SPECIFIED BY DIVISION 1 SPECIFICATIONS, AND IF DEEMED EQUAL BY THE ENGINEER. THE CONTRACTOR IS RESPONSIBLE FOR ENSURING SUBSTITUTED FIXTURES MEET OR EXCEED THE SPECIFICATIONS OF THE FIXTURES SPECIFIED.

SWITCH AND OCCUPANCY SENSOR SCHEDULE

S_{OS1} OCCUPANCY SENSOR - WALL MOUNT, DUAL TECHNOLOGY, LINE VOLTAGE, SINGLE POLE, WHITE
SENSOR SWITCH WSX-WA-WH

S_{OD1} OCCUPANCY SENSOR - DIMMER SWITCH WALL MOUNT, DUAL TECHNOLOGY, 120/277V, LED, ON/OFF DIMMER SWITCH
SENSOR SWITCH WSX-PDT-D-WH

(OS) OCCUPANCY SENSOR - CEILING MOUNT, DUAL TECHNOLOGY, LOW VOLTAGE, STANDARD RANGE
SENSOR SWITCH CM-PDT-9

(PP) POWER PACK - 120 VOLT, OUTPUT CURRENT: 150mA @ 15 VDC
SENSOR SWITCH PP20

S_D DIMMING SWITCH - WALL MOUNT, 120/277V INPUT, 120/277V OUTPUT, LED, ON/OFF/SLIDE DIMMER SWITCH
SYNERGY ISD-BC-120/277-IV

NOTE: APPROVED EQUAL FROM WATT STOPPER, GREENGATE, LUTRON OR HUBBELL.
PRIOR APPROVAL SUBMITTALS REQUIRED.

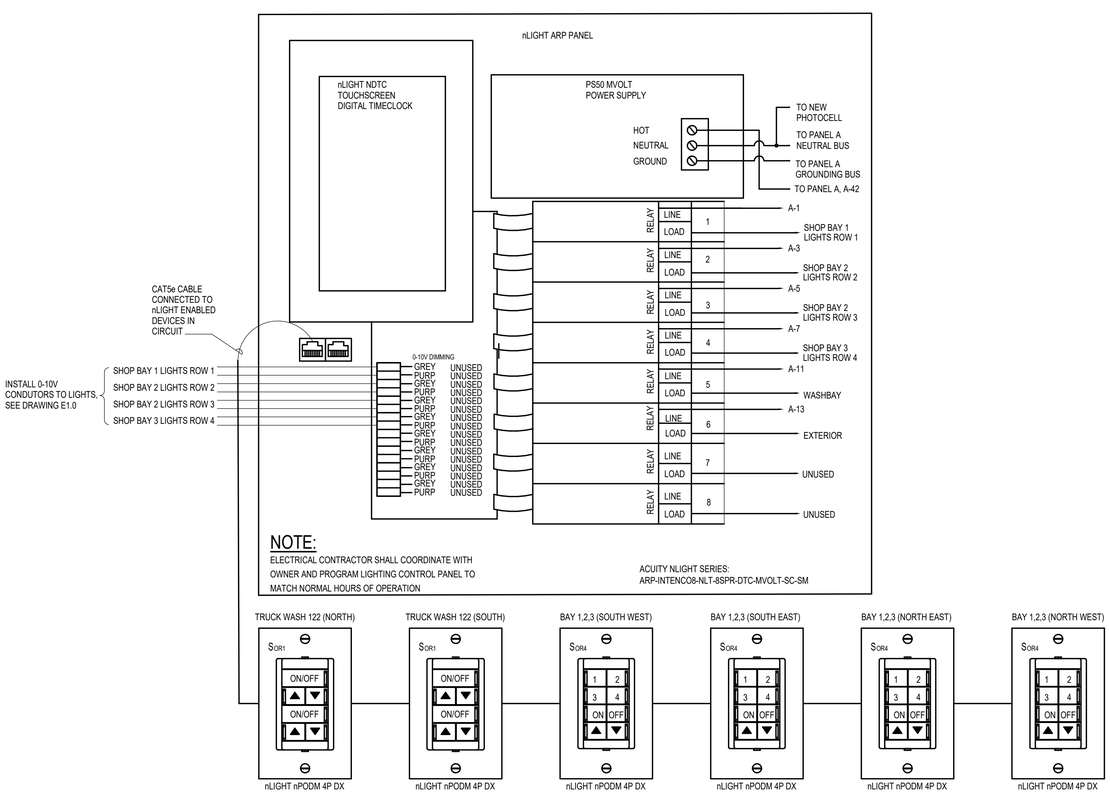

NOTE:
ELECTRICAL CONTRACTOR SHALL COORDINATE WITH OWNER AND PROGRAM LIGHTING CONTROL PANEL TO MATCH NORMAL HOURS OF OPERATION

LIGHTING CONTROL PANEL

1" = 1'-0"

MILLER STAUFFER ARCHITECTS
601 E. FRONT AVE., STE 201
COEUR D' ALENE, IDAHO 83814
P 208.664.1773 F 208.667.3174
WWW.MILLERSTAUFFER.COM

ENERGY CODE
Permit / Bid Set
2-10-2023

Powell Station Maintenance Facility
Highway 12
Powell Station, Idaho

LICENSED ARCHITECT AR-1050 MONTE J. MILLER STATE OF IDAHO

No.	Description	Date

PROJECT NUMBER 2206
PRINCIPAL Designer
PROJECT MANAGER Author

E0.1

2/10/2023 6:15:16 PM Autodesk Docs://ITD Powell Maintenance Facility/22-455 ITD POWELL STATION MAINTENANCE MEP r23.rvt

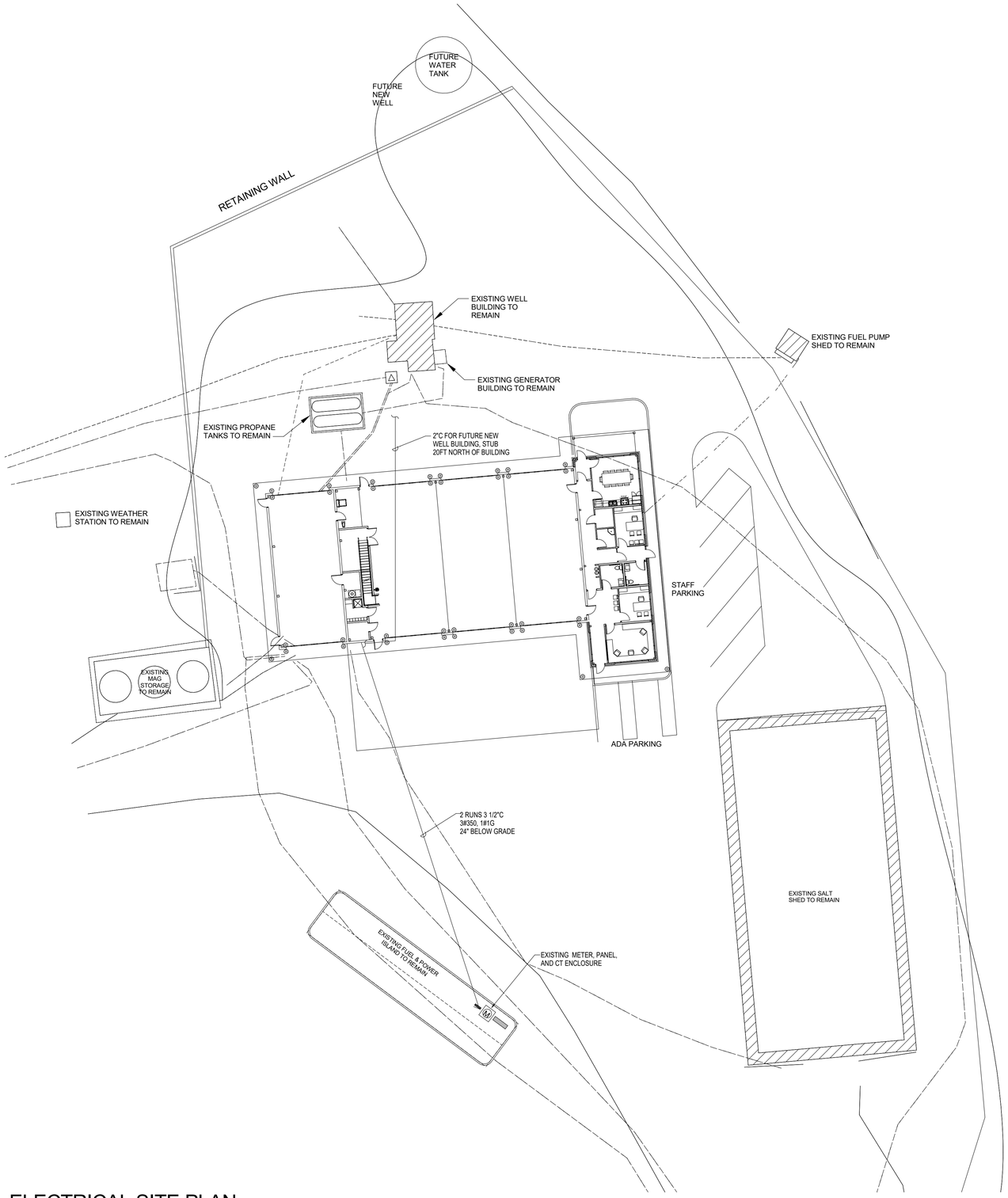

ELECTRICAL SITE PLAN

1" = 20'-0"

PROFESSIONAL ENGINEER REGISTERED 13299 02/10/2023 STATE OF IDAHO MATTHEW N. BRADLEY

MUSGROVE ENGINEERING, P.A.
234 S. Whisperwood Way
Boise, ID 83709
208.384.0585
645 West 25th Street
Idaho Falls, ID 83402
208.523.2862
www.musgrovepa.com

PROJECT NO. 22-455

MILLER STAUFFER ARCHITECTS
601 E. FRONT AVE., STE 201
COEUR D' ALENE, IDAHO 83814
P 208.664.1773 F 208.667.3174
WWW.MILLERSTAUFFER.COM

ELECTRICAL SITE PLAN

Permit / Bid Set

2-10-2023

Powell Station Maintenance Facility

Highway 12
Powell Station, Idaho

LICENSED ARCHITECT AR-1050 MONTE J. MILLER STATE OF IDAHO

No.	Description	Date

PROJECT NUMBER 2206
PRINCIPAL Designer
PROJECT MANAGER Author

ES1.0

2/10/2023 6:15:22 PM Autodesk Docs://ITD Powell Maintenance Facility/22-455 ITD POWELL STATION MAINTENANCE MEP r23.rvt

KEYED NOTES:

(#) SYMBOL USED FOR CALLOUT

1. UP TO MEZZANINE LIGHTING FIXTURES.
2. DOWN TO LIGHT SWITCH AT BOTTOM OF THE STAIRS.
4. TO EXHAUST FAN SWITCH, SEE MECHANICAL POWER PLAN E3.0.
5. INSTALL WEATHERPROOF COVER.
6. INSTALL 0-10V DIMMING CONDUCTORS BACK TO LIGHTING CONTROL PANEL.
7. INSTALL 0-10V DIMMING CONDUCTORS TO ALL LIGHTING CONTROLLED BY THIS SWITCH.
8. CAT5E DAISY CHAIN, SEE LIGHTING CONTROL PANEL DETAIL ON E0.1.

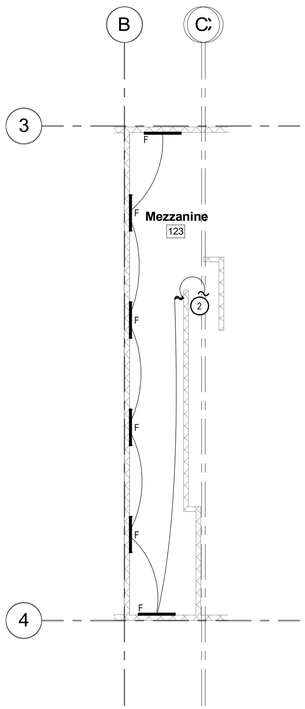

MEZZANINE LIGHTING PLAN
1/8" = 1'-0"

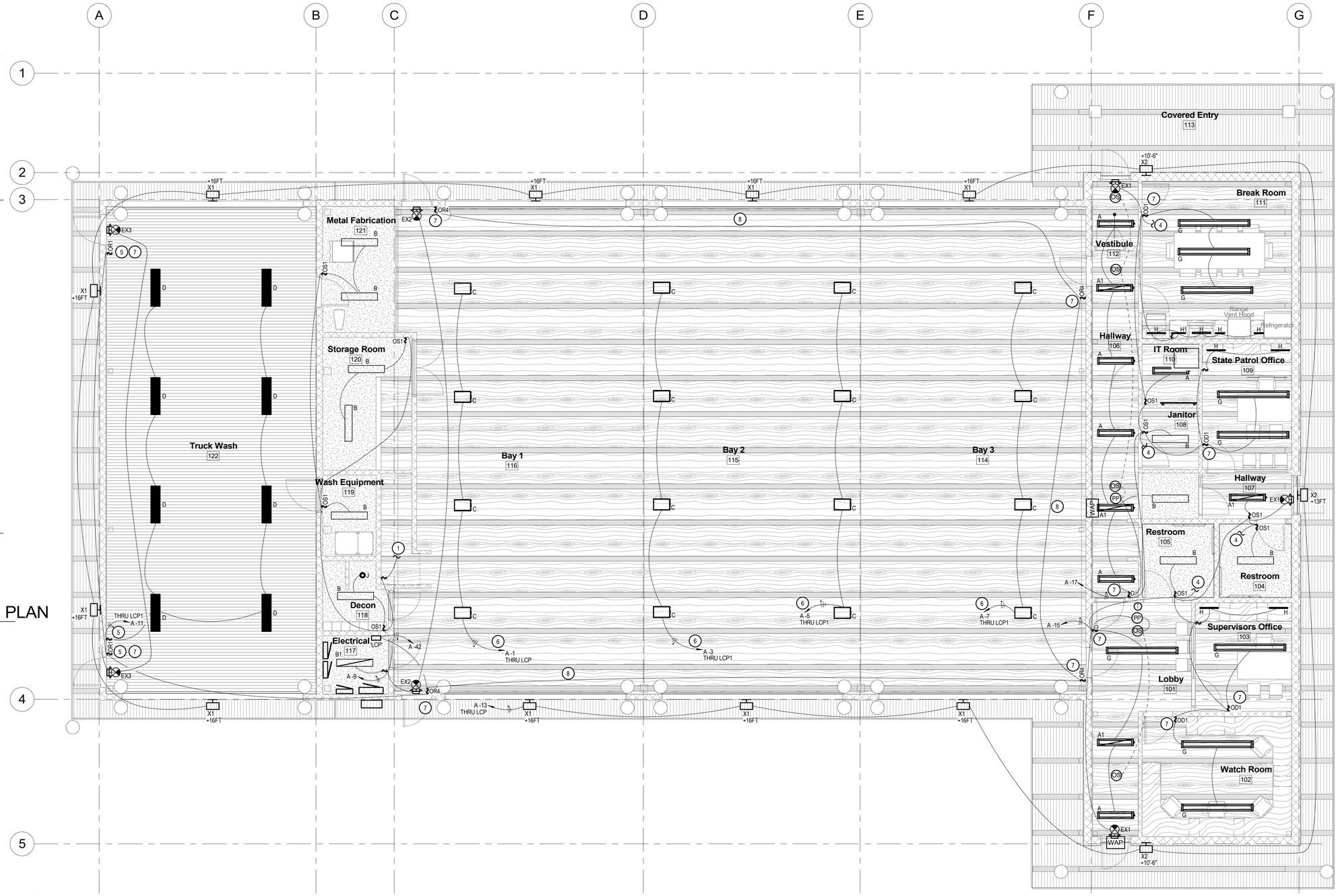

LIGHTING PLAN
3/16" = 1'-0"

PROFESSIONAL ENGINEER REGISTERED 13299 02/10/2023 STATE OF IDAHO MATTHEW N. BRADLEY

MUSGROVE ENGINEERING, P.A.
234 S. Whisperwood Way
Boise, ID 83709
208.384.0585
645 West 25th Street
Idaho Falls, ID 83402
208.523.2862
www.musgrovepa.com

PROJECT NO. 22-455

MILLER STAUFFER ARCHITECTS
601 E. FRONT AVE., STE 201
COEUR D' ALENE, IDAHO 83814
P 208.664.1773 F 208.667.3174
WWW.MILLERSTAUFFER.COM

LIGHTING PLANS

Permit / Bid Set

2-10-2023

Powell Station Maintenance Facility

Highway 12
Powell Station, Idaho

LICENSED ARCHITECT AR-1050 MONTE J. MILLER STATE OF IDAHO

No.	Description	Date

PROJECT NUMBER 2206
PRINCIPAL Designer
PROJECT MANAGER Author

E1.0

2/10/2023 6:15:18 PM Autodesk Docs://ITD Powell Maintenance Facility/22-455 ITD POWELL STATION MAINTENANCE MEP r23.rvt

KEYED NOTES:

(#) SYMBOL USED FOR CALLOUT

1. SEE RECESSED ENTERTAINMENT BOX DETAIL 4 ON DRAWING E5.1
2. SEE FLOOR BOX DETAIL 1 ON DRAWING E5.2.
3. TELEPHONE BACKBOARD.
4. COORDINATE LOCATION OF EQUIPMENT WITH OWNER PRIOR TO INSTALLATION.
5. COORDINATE INSTALLATION WITH OWNER AND CRANE INSTALLATION CONTRACTOR PRIOR TO INSTALLATION.
6. ELECTRICAL CONTRACTOR SHALL MAKE ALL LOW VOLTAGE AND LINE VOLTAGE TO MAKE DOOR OPERATIONAL.

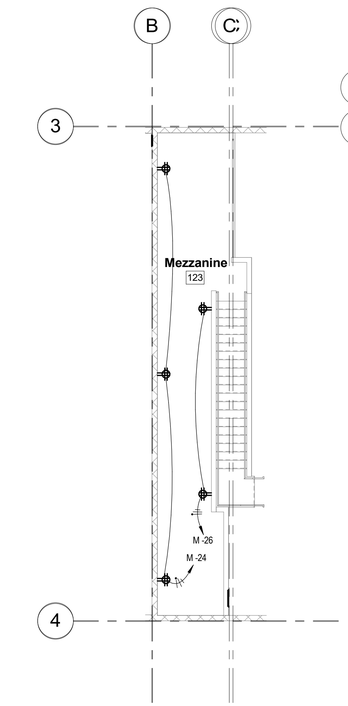

MEZZANINE POWER PLAN
1/8" = 1'-0"

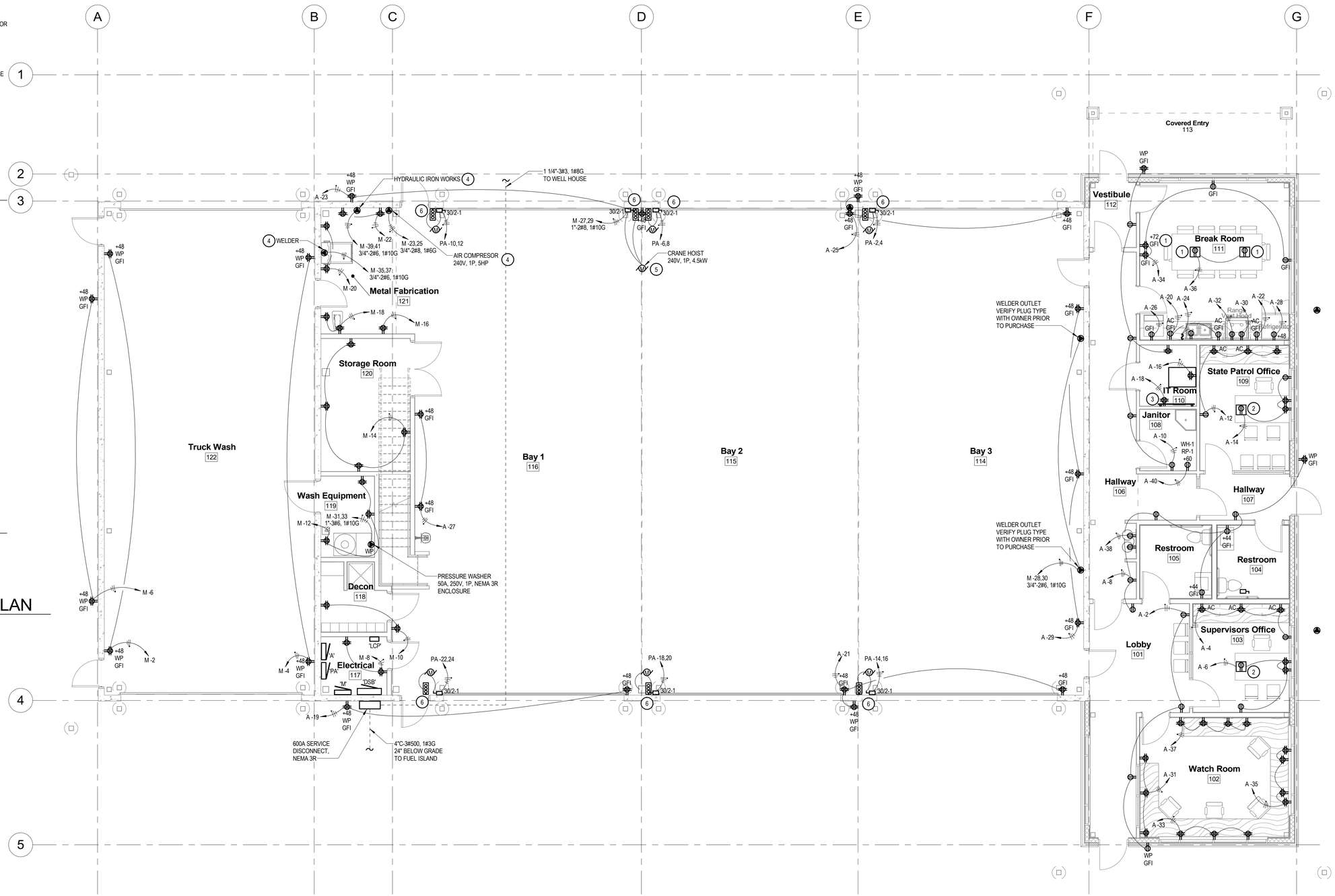

POWER PLAN
3/16" = 1'-0"

PROFESSIONAL ENGINEER REGISTERED 13299 02/10/2023 STATE OF IDAHO MATTHEW N. BRADLEY

MUSGROVE ENGINEERING, P.A.
234 S. Whisperwood Way
Boise, ID 83709
208.384.0585
645 West 25th Street
Idaho Falls, ID 83402
208.523.2862
www.musgrovepa.com
PROJECT NO. 22-455

MILLER STAUFFER ARCHITECTS
601 E. FRONT AVE., STE 201
COEUR D' ALENE, IDAHO 83814
P 208.664.1773 F 208.667.3174
WWW.MILLERSTAUFFER.COM

POWER PLANS
Permit / Bid Set
2-10-2023

Powell Station Maintenance Facility
Highway 12
Powell Station, Idaho

LICENSED ARCHITECT AR-1050 MONTE J. MILLER STATE OF IDAHO

No.	Description	Date

PROJECT NUMBER 2206
PRINCIPAL Designer
PROJECT MANAGER Author

E2.0

2/10/2023 6:15:19 PM Autodesk Docs://ITD Powell Maintenance Facility/22-455 ITD POWELL STATION MAINTENANCE MEP /23.rvt

KEYED NOTES:

(#) SYMBOL USED FOR CALLOUT

1. 1/2" CONDUIT TO CORRESPONDING MECHANICAL UNIT.
2. CONNECT TO LOCAL LIGHTING CIRCUIT.
3. SEE DRAWING M3.0/M3.1 MECHANICAL SCHEDULES FOR SWITCH TYPE.
4. SEE DRAWING M3.0/M3.1 MECHANICAL SCHEDULES FOR MAU CONNECTION INFORMATION.
5. CONTINUOSLY RUNNING FAN, SEE DRAWING M3.0/M3.1 MECHANICAL SCHEDULES FOR FAN INFORMATION.
6. VGD-1 CO/NO2 CONTROL PANEL. SEE MECHANICAL DRAWINGS FOR CONTROL DIAGRAM AND BASIC DESIGN.
7. 1/2" CONDUIT TO CORRESPONDING CO/NO2 SENSOR. BOX, CONDUIT, AND CONDUCTORS TO BE PROVIDED BY ELECTRICAL CONTRACTOR. LEAVE 12" SLACK BOX AND CO/NO2 SENSOR. MECHANICAL CONTRACTOR TO MAKE FINAL CONNECTIONS. COORDINATE BOX SIZE AND QUANTITY OF CONDUCTOR(S) WITH MECHANICAL CONTRACTOR. COORDINATE EXACT LOCATION WITH MECHANICAL CONTRACTOR.
8. INSTALL INTERLOCK RELAY FUNCTIONAL DEVICES RIB2401B OR EQUAL. INTERLOCK EXHAUST FAN AND LOUVERS TO MAKE-UP AIR UNIT RELAY CONTACT SEE VEHICLE EXHAUST SYSTEM INTERLOCK CONNECTION DIAGRAM ON DRAWING E5.2.
9. PROVIDE AMBIENT IN LINE THERMOSTAT NVENT AMC-IA OR EQUAL.
10. INSTALL HEATED WALKWAY MAT, HEATTRAK CAT NO. HTM24-10 OR EQUAL.
11. INSTALL NEMA 6-15 RECEPTACLE FOR HEAT MAT.
12. INSTALL HEATED WALKWAY MAT, HEATTRAK CAT NO. HTM24-5 OR EQUAL.
13. PROVIDE INTERLOCKING TO OPEN LOUVER L-4 FROM DUCT HEATER RUN CONTACT.
14. SEE VEHICLE EXHAUST INTERLOCK RELAY CONNECTION DIAGRAM ON DRAWING E5.2.

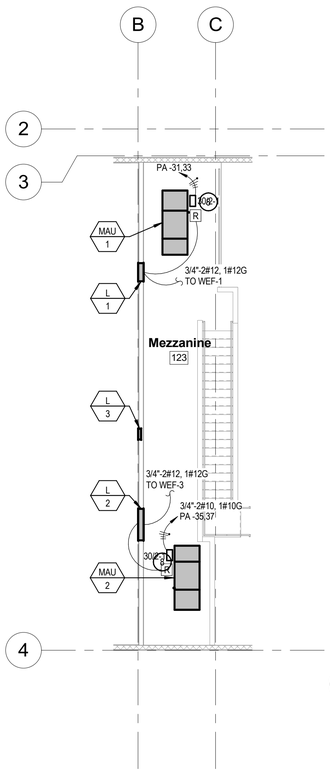

MEZZANINE MECHANICAL POWER PLAN

1/8" = 1'-0"

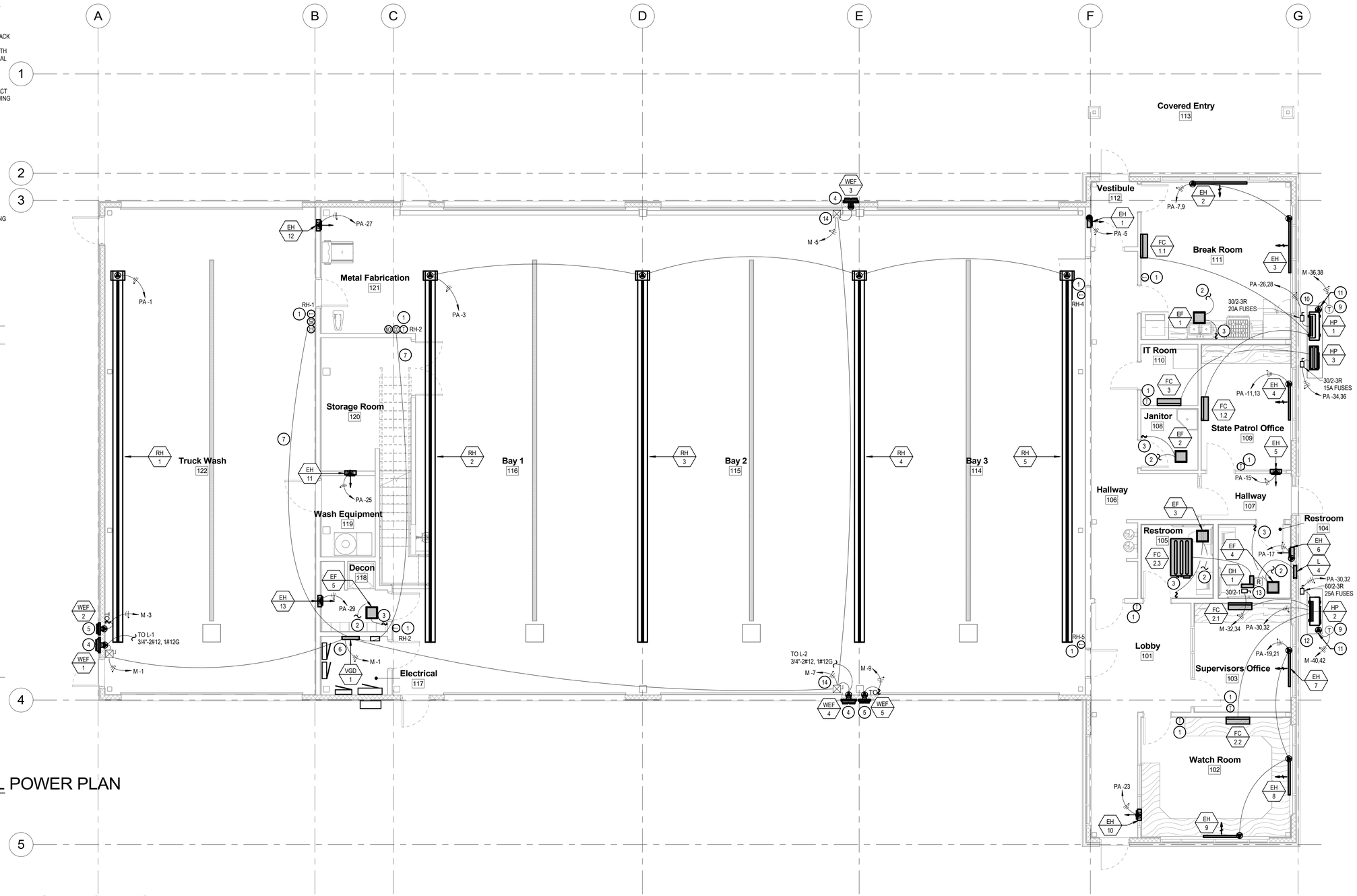

MECHANICAL POWER PLAN

3/16" = 1'-0"

PROFESSIONAL ENGINEER REGISTERED 13299 02/10/2023 STATE OF IDAHO MATTHEW N. BRADLEY

MUSGROVE ENGINEERING, P.A.
234 S. Whisperwood Way
Boise, ID 83709
208.384.0585
645 West 25th Street
Idaho Falls, ID 83402
208.523.2862
www.musgrovepa.com

PROJECT NO. 22-455

MILLER STAUFFER ARCHITECTS
601 E. FRONT AVE., STE 201
COEUR D' ALENE, IDAHO 83814
P 208.664.1773 F 208.667.3174
WWW.MILLERSTAUFFER.COM

MECHANICAL POWER PLAN

Permit / Bid Set

2-10-2023

Powell Station Maintenance Facility

Highway 12
Powell Station, Idaho

LICENSED ARCHITECT AR-1050 MONTE J. MILLER STATE OF IDAHO

No.	Description	Date

PROJECT NUMBER 2206
PRINCIPAL Designer
PROJECT MANAGER Author

E3.0

2/10/2023 6:15:20 PM Autodesk Docs://ITD Powell Maintenance Facility/22-455 ITD POWELL STATION MAINTENANCE MEP r23.rvt

MUSGROVE ENGINEERING, P.A.
234 S. Whisperwood Way
Boise, ID 83709
208.384.0585
645 West 25th Street
Idaho Falls, ID 83402
208.523.2862
www.musgrovepa.com
PROJECT NO. 22-455

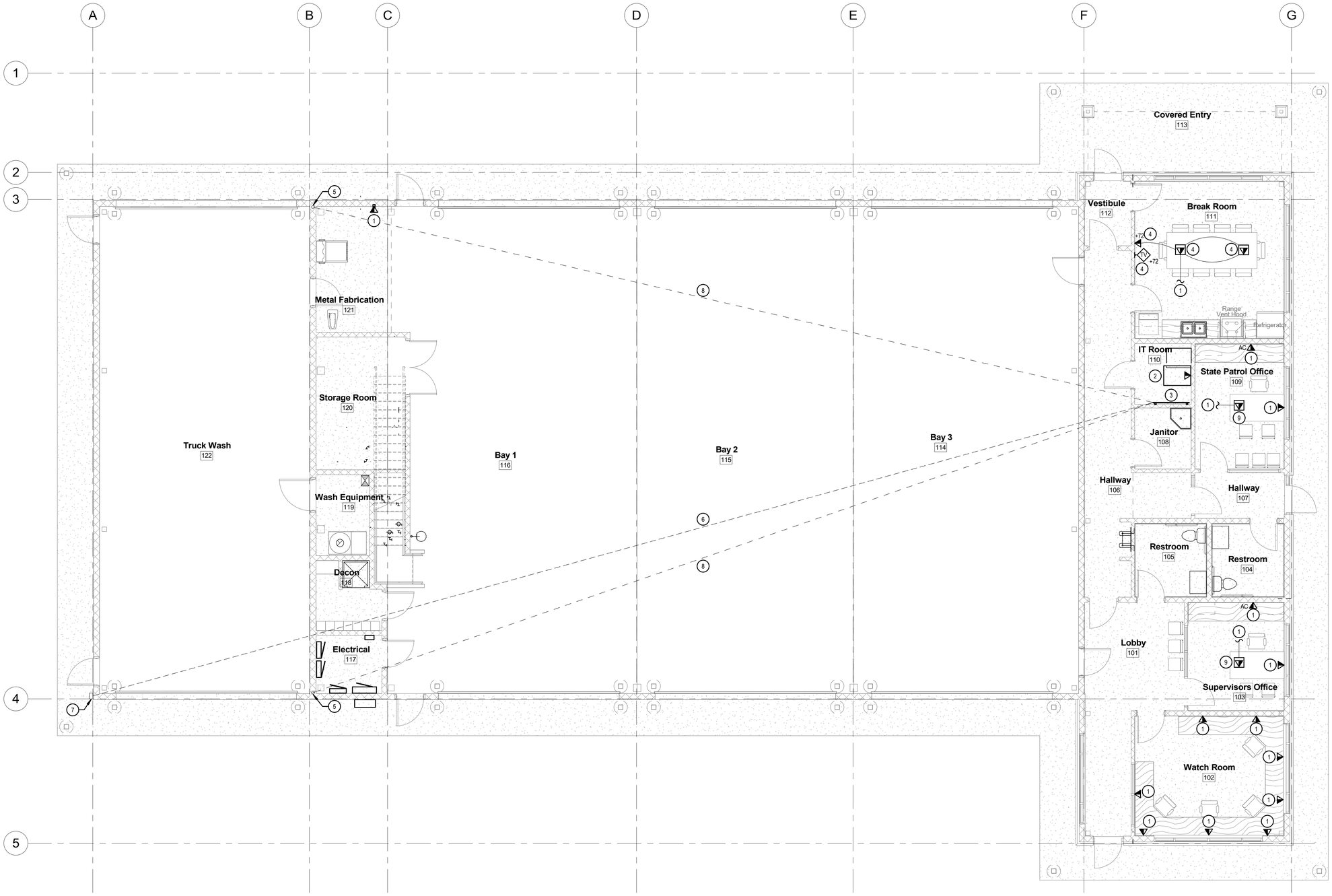

KEYED NOTES:

(#) SYMBOL USED FOR CALLOUT

1. 1"C UNDER SLAB BACK TO DATA/COMM, SEE DETAIL 2 ON DRAWING E5.1.
2. NETWORK RACK PROVIDED BY OWNER AND INSTALLED BY OWNER. SEE DRSPECIFICATIONS SECTION 271500.
3. SEE TELEPHONE BACKBOARD DETAIL 3 ON DRAWING E5.1.
4. SEE RECESSED ENTERTAINMENT BOX 4 DETAIL ON DRAWING E5.1
5. WIRELESS/SATELITE COMMUNICATIONS RECEIVER LOCATED ON ROOF SOFFIT. SEE ARCHITECTURAL DRAWINGS FOR LOCATION.
6. 2"C UNDERSLAB TO TELEPHONE BACKBOARD.
7. INTERCEPT EXISTING TELEPHONE SERVICE NEAR THIS LOCATION.
8. 2"C UNDERSLAB TO WIRELESS/SATELITE COMMUNICATIONS RECEIVER.
9. SEE FLOOR BOX DETAIL 1 ON DRAWING E5.2.

SPECIAL SYSTEMS PLAN

16" = 1'-0"

MILLER STAUFFER ARCHITECTS
601 E. FRONT AVE. STE 201
COEUR D' ALENE, IDAHO 83814
P 208.664.1773 F 208.667.3174
WWW.MILLERSTAUFFER.COM

SPECIAL SYSTEMS PLAN
Permit / Bid Set
2-10-2023

Powell Station Maintenance Facility
Highway 12
Powell Station, Idaho

LICENSED ARCHITECT AR-1050
MONTE J. MILLER STATE OF IDAHO

No.	Description	Date

PROJECT NUMBER 2206
PRINCIPAL Designer
PROJECT MANAGER Author

E4.0

2/10/2023 6:15:21 PM Autodesk Docs://ITD Powell Maintenance Facility/22-455 ITD POWELL STATION MAINTENANCE MEP /23.rvt

Branch Panel: M

Location: ELECTRICAL 117 **Volts:** 120/240 Single **A.I.C. Rating:** 22,000
Supply From: DSB **Phases:** 1 **Mains Type:** MLO
Mounting: Surface **Wires:** 3 **Mains Rating:** 400 A
Enclosure: Type 1

Notes:

CKT	Circuit Description	CKT Note	Trip	Poles	A		B		Poles	Trip	CKT Note	Circuit Description	CKT
1	GARAGE WALL EXHAUST FAN...		20 A	1	667 VA	720 VA			1	20 A		REC - TRUCK WASH 122	2
3	GARAGE WALL EXHAUST FAN...		20 A	1			506 VA	720 VA	1	20 A		REC - TRUCK WASH 122	4
5	GARAGE WALL EXHAUST FAN...		20 A	1	1587 VA	720 VA			1	20 A		REC - EXT TRUCK WASH 122	6
7	GARAGE WALL EXHAUST FAN...		20 A	1			506 VA	720 VA	1	20 A		REC - ELECTRICAL ROOM 117	8
9	GARAGE WALL EXHAUST FAN...		20 A	1	1587 VA	720 VA			1	20 A		REC - DECON 118	10
11	Spare		20 A	1			0 VA	1080 VA	1	20 A		REC - WASH EQUIPMENT 119	12
13	Spare		20 A	1	0 VA	1440 VA			1	20 A		REC - STORAGE 120	14
15	Spare		20 A	1			0 VA	360 VA	1	20 A		REC - METAL FABRICATION 121	16
17	Spare		20 A	1	0 VA	720 VA			1	20 A		REC - METAL FABRICATION 121	18
19	Spare		20 A	1			0 VA	720 VA	1	20 A		REC - METAL FABRICATION 121	20
21	Spare		20 A	1	0 VA	720 VA			1	20 A		REC - METAL FABRICATION 121	22
23	AIR COMPRESSOR		60 A	2			1824 VA	1080 VA	1	20 A		REC - MEZZANINE 123	24
25	--	--	--	--	1824 VA	720 VA			1	20 A		REC - MEZZANINE 123	26
27	CRANE HOIST		30 A	2			2250 VA	5040 VA	2	60 A		WELDER	28
29	--	--	--	--	2250 VA	5040 VA			--	--	--	--	30
31	PRESSURE WASHER		50 A	2			4000 VA	2500 VA	2	20 A		DUCT HEATER	32
33	--	--	--	--	4000 VA	2500 VA			--	--	--	--	34
35	WELDER		60 A	2			5760 VA	162 VA	2	15 A		HEAT MAT FOR HP-1, HP-3	36
37	--	--	--	--	5760 VA	162 VA			--	--	--	--	38
39	HYDRUALIC IRON WORKER		60 A	2			5760 VA	162 VA	2	15 A		HEAT MAT FOR HP-2	40
41	--	--	--	--	5760 VA	162 VA			--	--	--	--	42
				Total Load:	37059 VA		33150 VA						
				Total Amps:	309 A		276 A						

Legend:

Branch Panel: A

Location: ELECTRICAL 117 **Volts:** 120/240 Single **A.I.C. Rating:** 22,000
Supply From: DSB **Phases:** 1 **Mains Type:** MLO
Mounting: Surface **Wires:** 3 **Mains Rating:** 225 A
Enclosure: Type 1

Notes: 1) GFCI CIRCUIT BREAKER.

CKT	Circuit Description	CKT Note	Trip	Poles	A		B		Poles	Trip	CKT Note	Circuit Description	CKT
1	LTS BAY 1 ROW 1		20 A	1	560 VA	900 VA			1	20 A		REC - LOBBY 101	2
3	LTS BAY 2 ROW 2		20 A	1			560 VA	1440 VA	1	20 A		REC - SUPERVISORS OFFICE 103	4
5	LTS BAY 2 ROW 3		20 A	1	560 VA	1080 VA			1	20 A		REC - SUPERVISORS OFFICE 103	6
7	LTS BAY 3 ROW 4		20 A	1			560 VA	1440 VA	1	20 A		REC - RR 104, 105/HALLWAY 106, 107	8
9	LTS - 117,118,119,120,121, MEZZ 123		20 A	1	257 VA	1440 VA			1	20 A	1	REC - HALL 106, JAN 108, IT 110, 112	10
11	LTS - TRUCK WASH		20 A	1			0 VA	1620 VA	1	20 A		REC - STATE PATROL OFFICE 109	12
13	LTS EXTERIOR		20 A	1	325 VA	1080 VA			1	20 A		REC - STATE PATROL OFFICE 109	14
15	LTS - 101,102,103,104,105,107		20 A	1			921 VA	360 VA	1	20 A		REC - IT ROOM 110 NETWORK RACK	16
17	LTS - 106,108,109,110,111,112		20 A	1	1405 VA	360 VA			1	20 A		REC - IT 110 TELEPHONE...	18
19	REC - MAINT BAY 1 & 2 SOUTH WALL		20 A	1			720 VA	360 VA	1	20 A		REC - BREAK RM 111 COUNTER	20
21	REC - MAINT BAY 2 & 3 SOUTH WALL		20 A	1	1080 VA	180 VA			1	20 A		REC - BREAK RM 111 COUNTER	22
23	REC - MAINT BAY 1 & 2 NORTH WALL		20 A	1			720 VA	500 VA	1	20 A	1	REC - BREAK RM 111 DISPOSAL	24
25	REC - MAINT BAY 2 & 3 NORTH WALL		20 A	1	1080 VA	720 VA			1	20 A	1	REC - BREAK RM 111 ICE MACHINE	26
27	REC - MAINT BAY WEST WALL		20 A	1			720 VA	720 VA	1	20 A	1	REC - BREAK RM 111...	28
29	REC - MAINT BAY EAST WALL		20 A	1	1080 VA	180 VA			1	20 A	1	REC - BREAK RM 111 GAS RANGE	30
31	REC - WATCH ROOM 102		20 A	1			1080 VA	180 VA	1	20 A		REC - BREAK RM 111 RANGE HOOD	32
33	REC - WATCH ROOM 102		20 A	1	1080 VA	1080 VA			1	20 A		REC - BREAK RM 111	34
35	REC - WATCH ROOM 102		20 A	1			1440 VA	360 VA	1	20 A		REC - BREAK RM 111 FLOOR BOXES	36
37	REC - WATCH ROOM 102		20 A	1	1440 VA	700 VA			1	20 A	1	REC - DRINKING FOUNTAIN	38
39								180 VA	1	20 A		REC - WATER HEATER/RECIRC...	40
41						180 VA			1	20 A		LIGHTING CONTROL PANEL (LCP)	42
				Total Load:	16709 VA		13844 VA						
				Total Amps:	139 A		115 A						

Legend:

Branch Panel: PA

Location: ELECTRICAL 117 **Volts:** 120/240 Single **A.I.C. Rating:** 22,000
Supply From: DSB **Phases:** 1 **Mains Type:** MLO
Mounting: Surface **Wires:** 3 **Mains Rating:** 225 A
Enclosure: Type 1

Notes:

CKT	Circuit Description	CKT Note	Trip	Poles	A		B		Poles	Trip	CKT Note	Circuit Description	CKT
1	RADIANT HEATERS - RH-1		20 A	1	132 VA	960 VA			2	20 A		OVERHEAD DOOR OP BAY 3 NE	2
3	RADIANT HEATERS - RH-2,3,4,5		20 A	1			528 VA	960 VA	--	--	--	--	4
5	ELECTRIC HEAT UNIT EH-1		20 A	1	1000 VA	960 VA			2	20 A		OVERHEAD DOOR OP BAY 2 N	6
7	ELECTRIC HEAT UNITS EH-2,EH-3		20 A	2			1500 VA	960 VA	--	--	--	--	8
9	--	--	--	--	1500 VA	960 VA			2	20 A		OVERHEAD DOOR OP BAY 1 NW	10
11	ELECTRIC HEAT UNIT EH-4		20 A	2			750 VA	960 VA	--	--	--	--	12
13	--	--	--	--	750 VA	960 VA			2	20 A		OVERHEAD DOOR OP BAY 3 SE	14
15	ELECTRIC HEAT UNIT EH-5		20 A	1			1000 VA	960 VA	--	--	--	--	16
17	ELECTRIC HEAT UNIT EH-6		20 A	1	1000 VA	960 VA			2	20 A		OVERHEAD DOOR OP BAY 2 S	18
19	ELECTRIC HEAT UNIT EH-7,8,9		20 A	2			1500 VA	960 VA	--	--	--	--	20
21	--	--	--	--	1500 VA	960 VA			2	20 A		OVERHEAD DOOR OP BAY 1 SW	22
23	ELECTRIC HEAT UNIT EH-10		20 A	1			1000 VA	960 VA	--	--	--	--	24
25	ELECTRIC HEAT UNIT EH-11		20 A	1	1000 VA	2352 VA			2	30 A		HEAT PUMP HP-1, FAN COIL FC-1.1,2	26
27	ELECTRIC HEAT UNIT EH-12		20 A	1			1000 VA	2352 VA	--	--	--	--	28
29	ELECTRIC HEAT UNIT EH-13		20 A	1	1000 VA	2880 VA			2	40 A		HEAT PUMP HP-2, FAN COIL...	30
31	MAKE-UP AIR UNIT MAU-1		20 A	2			1070 VA	2880 VA	--	--	--	--	32
33	--	--	--	--	1070 VA	1040 VA			2	15 A		HEAT PUMP HP-3, FAN COIL FC-3	34
35	MAKE-UP AIR UNIT MAU-2		25 A	2			1794 VA	1040 VA	--	--	--	--	36
37	--	--	--	--	1794 VA	0 VA			1	20 A		Spare	38
39	Spare		20 A	1			0 VA	0 VA	1	20 A		Spare	40
41	Spare		20 A	1	0 VA	0 VA			1	20 A		Spare	42
				Total Load:	22778 VA		22174 VA						
				Total Amps:	190 A		185 A						

Legend:

Branch Panel: DSB

Location: ELECTRICAL 117 **Volts:** 120/240 Single **A.I.C. Rating:** 22,000
Supply From: UTILITY **Phases:** 1 **Mains Type:** MLO
Mounting: Surface **Wires:** 3 **Mains Rating:** 800 A
Enclosure: Type 1

Notes:

CKT	Circuit Description	CKT Note	Trip	Poles	A		B		Poles	Trip	CKT Note	Circuit Description	CKT
1	PANEL 'M'		400 A	2	37059 VA	22778 VA			2	200 A		PANEL 'PA'	2
3	--	--	--	--			33150 VA	22174 VA	--	--	--	--	4
5	PANEL 'A'		200 A	2	16709 VA	0 VA			2	100 A		WELL HOUSE	6
7	--	--	--	--			13844 VA	0 VA	--	--	--	--	8
9	Space		--	1	--	--			1	--		Space	10
11	Space		--	1			--	--	1	--		Space	12
				Total Load:	76541 VA		69166 VA						
				Total Amps:	638 A		576 A						

Legend:

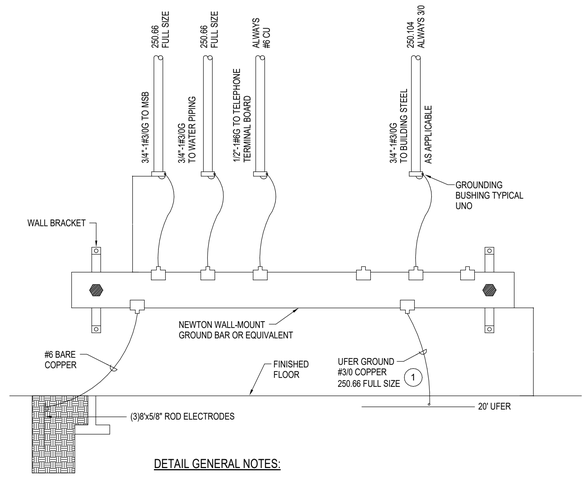

DETAIL GENERAL NOTES:

A. ALL CONDUCTORS SHALL BE IN EMT CONDUIT UNLESS NOTED OTHERWISE. ALL CONDUIT SHALL HAVE A GROUNDING BUSHING AT EACH END.
B. ALL CONNECTIONS SHALL BE EXOTHERMIC WELD, LISTED PRESSURE CONNECTORS, LISTED CLAMPS OR OTHER LISTED MEANS.
C. PROVIDE BONDING OF GAS PIPING PER NEC 250.104(B)(1).

DETAIL KEYED NOTES:

(#) SYMBOL USED FOR NOTE CALLOUT.

1. UFER GROUND TO BE 20' OF #4 AWG COPPER OR 1/2" MINIMUM DIAMETER STEEL REINFORCING BAR PER 250.52.

GROUNDING DETAIL

NTS

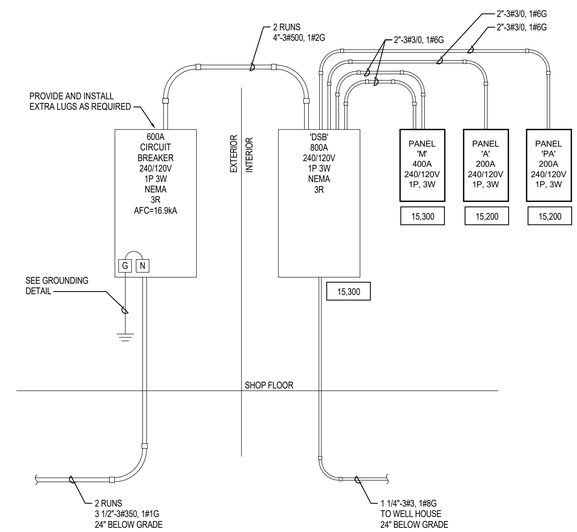

ONE-LINE DIAGRAM

NTS

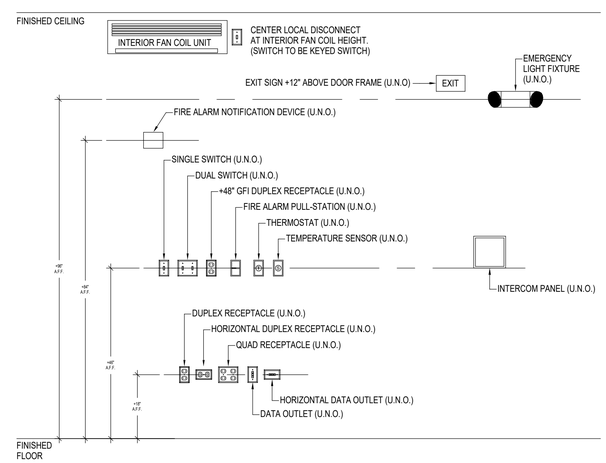

DETAIL GENERAL NOTES:

1. PROVIDE FRAMING AS REQUIRED.

STANDARD MOUNTING HEIGHTS

NTS

PROFESSIONAL ENGINEER REGISTERED 13299 02/10/2023 STATE OF IDAHO MATTHEW N. BRADLEY

MUSGROVE ENGINEERING, P.A.
234 S. Whisperwood Way
Boise, ID 83709
208.384.0585
645 West 25th Street
Idaho Falls, ID 83402
208.523.2862
www.musgrovepa.com
PROJECT NO. 22-455

MILLER STAUFFER ARCHITECTS
601 E. FRONT AVE., STE 201
COEUR D' ALENE, IDAHO 83814
P 208.664.1773 F 208.667.3174
WWW.MILLERSTAUFFER.COM

LICENSED ARCHITECT AR-1050 MONTE J. MILLER STATE OF IDAHO

ELECTRICAL DETAILS & SCHEDULES
Permit / Bid Set
2-10-2023

Powell Station Maintenance Facility
Highway 12
Powell Station, Idaho

No.	Description	Date

PROJECT NUMBER 2206
PRINCIPAL Designer
PROJECT MANAGER Author

E5.0

2/10/2023 6:15:21 PM Autodesk Docs://ITD Powell Maintenance Facility/22-455 ITD POWELL STATION MAINTENANCE MEP r23.rvt

MUSGROVE ENGINEERING, P.A.
234 S. Whisperwood Way
Boise, ID 83709
208.384.0585
645 West 25th Street
Idaho Falls, ID 83402
208.523.2862
www.musgrovepa.com
PROJECT NO. 22-455

PROFESSIONAL ENGINEER REGISTERED 13299 02/10/2023 STATE OF IDAHO MATTHEW N. BRADLEY

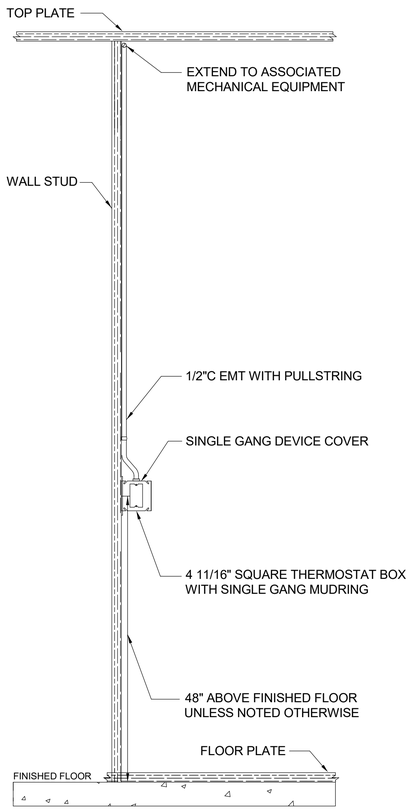

ELECTRICAL CONTRACTOR RESPONSIBLE FOR INSTALLATION OF THERMOSTAT BOX ROUGH-IN
TYPICAL DETAIL - ACTUAL INSTALLATION MAY VARY

1 THERMOSTAT ROUGH-IN DETAIL
1" = 1'-0"

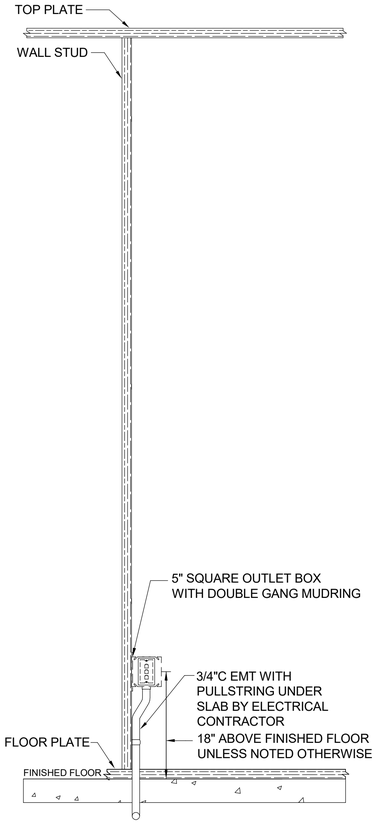

ELECTRICAL CONTRACTOR RESPONSIBLE FOR INSTALLATION OF DATA/TELEPHONE ROUGH-IN
TYPICAL DETAIL - ACTUAL INSTALLATION MAY VARY

2 DATA/TELEPHONE ROUGH-IN ELEVATION
1" = 1'-0"

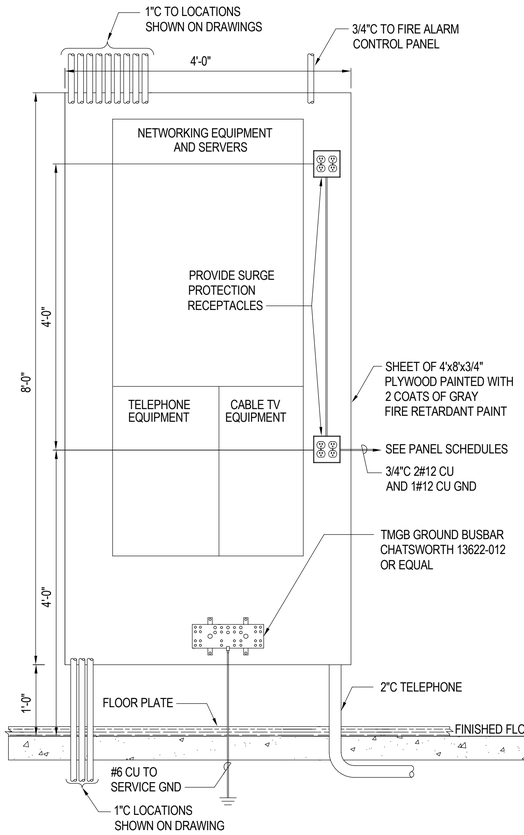

3 TELEPHONE BACKBOARD ELEVATION
1" = 1'-0"

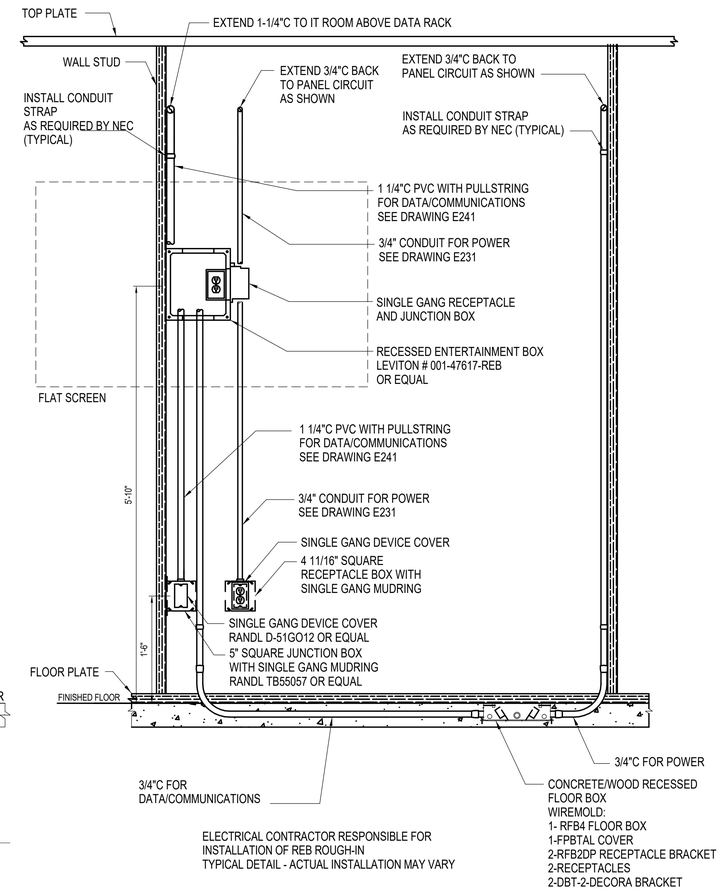

ELECTRICAL CONTRACTOR RESPONSIBLE FOR INSTALLATION OF REB ROUGH-IN
TYPICAL DETAIL - ACTUAL INSTALLATION MAY VARY

4 RECESSED ENTERTAINMENT BOX ROUGH-IN ELEVATION
1" = 1'-0"

MILLER STAUFFER ARCHITECTS
601 E. FRONT AVE., STE 201
COEUR D' ALENE, IDAHO 83814
P 208.664.1773 F 208.667.3174
WWW.MILLERSTAUFFER.COM

ELECTRICAL DETAILS
Permit / Bid Set
2-10-2023

Powell Station Maintenance Facility
Highway 12
Powell Station, Idaho

LICENSED ARCHITECT AR-1050 MONTE J. MILLER STATE OF IDAHO

No.	Description	Date

PROJECT NUMBER 2206
PRINCIPAL Designer
PROJECT MANAGER Author

E5.1

2/10/2023 6:15:22 PM Autodesk Docs://ITD Powell Maintenance Facility/22-455 ITD POWELL STATION MAINTENANCE MEP r23.rvt

MUSGROVE
ENGINEERING, P.A.
234 S. Whisperwood Way
Boise, ID 83709
208.384.0585
645 West 25th Street
Idaho Falls, ID 83402
208.523.2862
www.musgrovepa.com
PROJECT NO. 22-455

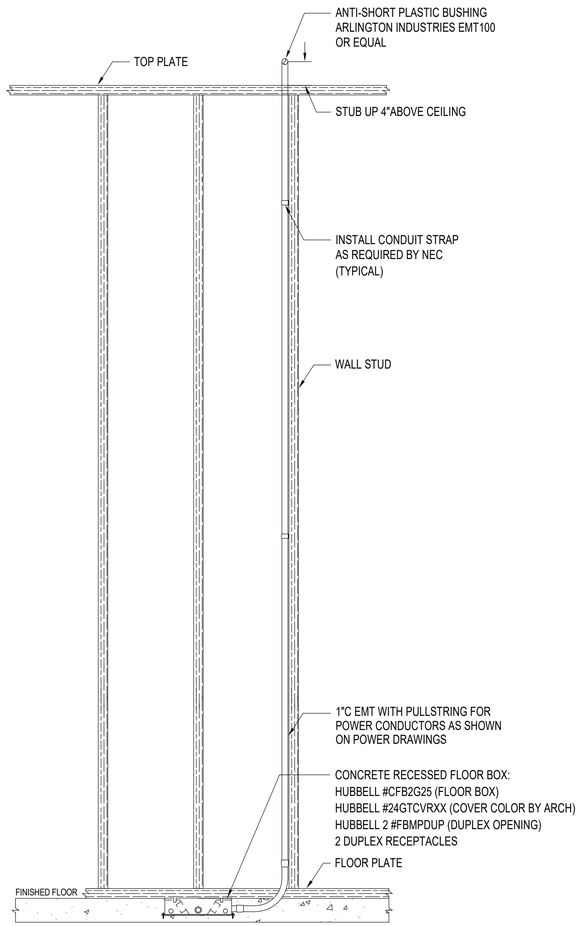

ELECTRICAL CONTRACTOR RESPONSIBLE FOR
INSTALLATION OF FLOOR BOX ROUGH-IN
TYPICAL DETAIL - ACTUAL INSTALLATION MAY VARY

1 FLOOR BOX ELEVATION
1" = 1'-0"

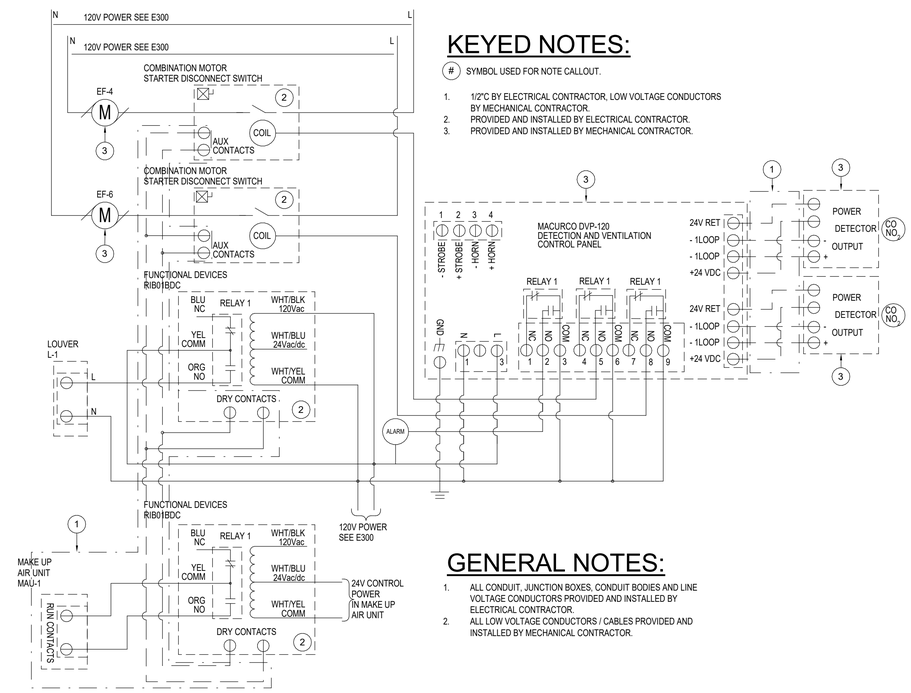

KEYED NOTES:

(#) SYMBOL USED FOR NOTE CALLOUT.

1. 1/2"C BY ELECTRICAL CONTRACTOR, LOW VOLTAGE CONDUCTORS BY MECHANICAL CONTRACTOR.
2. PROVIDED AND INSTALLED BY ELECTRICAL CONTRACTOR.
3. PROVIDED AND INSTALLED BY MECHANICAL CONTRACTOR.

GENERAL NOTES:

1. ALL CONDUIT, JUNCTION BOXES, CONDUIT BODIES AND LINE VOLTAGE CONDUCTORS PROVIDED AND INSTALLED BY ELECTRICAL CONTRACTOR.
2. ALL LOW VOLTAGE CONDUCTORS / CABLES PROVIDED AND INSTALLED BY MECHANICAL CONTRACTOR.

2 VEHICLE EXHAUST SYSTEM INTERLOCK CONNECTION DIAGRAM
12" = 1'-0"

MILLER STAUFFER ARCHITECTS
601 E. FRONT AVE., STE 201
COEUR D' ALENE, IDAHO 83814
P 208.664.1773 F 208.667.3174
WWW.MILLERSTAUFFER.COM

ELECTRICAL DETAILS
Permit / Bid Set
2-10-2023

Powell Station Maintenance Facility
Highway 12
Powell Station, Idaho

LICENSED ARCHITECT AR-1050
MONTE J. MILLER
STATE OF IDAHO

No.	Description	Date

PROJECT NUMBER 2206
PRINCIPAL Designer
PROJECT MANAGER Author

E5.2

2/10/2023 6:15:22 PM Autodesk Docs://ITD Powell Maintenance Facility/22-455 ITD POWELL STATION MAINTENANCE MEP /23.rvt

DATA PLAN SYMBOL LEGEND

STARLINK	STARLINK ANTENNA - SUPPLIED BY OWNER & INSTALLED BY OWNER - SHOWN FOR REFERENCE
MAST	24'-0" FIBERGLASS COMMUNICATION MAST - WALL MOUNTED WITH TWO CONNECTION POINTS - CONTRACTOR TO INSTALL OWNER SUPPLIED MAST - OWNER WILL INSTALL ANTENNAS & CABLES
WAP	WIRELESS ACCESS POINT LOCATION - SUPPLIED & INSTALLED BY OWNER (CONTRACTOR TO PROVIDE CABLING TO LOCATION)
	FLOOR DATA BOX W/ (4) DATA CIRCUITS - METAL LID (SELECT TYPE BASED ON FLOOR CONSTRUCTION)
OUTLET HEIGHT (CENTER OF OUTLET TO FINISHED FLOOR) +48	WALL DATA JACK W/ (2) DATA CIRCUITS

DATA PLAN GENERAL NOTES

1. CONTRACTOR IS RESPONSIBLE FOR CONDUITS, WALL BOXES, PLATES, & DATA CABLES AS SHOWN - CABLES TO BE PUNCHED DOWN TO JACK & PATCH PANEL IN RACK.
2. OWNER WILL BE RESPONSIBLE FOR ALL SWITCHES, ROUTERS, COMM ANTENNAS, STARLINK ANTENNA & POWER SUPPLY
3. CONTRACTOR TO HOME RUN SHIELDED CAT6a DATA CABLE FROM ALL DATA JACKS BACK TO DATA RACK (MDF).
4. ALL DATA CONDUIT TO BE SCHEDULE 40 PVC
5. MOST OF THE CEILINGS ARE EXPOSED TO THE OCCUPANTS. CONTRACTOR TO TAKE CARE IN BUNDLING CABLES TOGETHER.
6. CONTRACTOR TO PROVIDE SCHEDULE 40 PVC CONDUIT WITH (3) PULL STRING FROM MAST TO RADIO LOCATIONS AS SHOWN - OWNER WILL SUPPLY CABLES AT LATER DATE
7. CONTRACTOR TO PROVIDE SCHEDULE 40 PVC CONDUIT WITH (3) PULL STRINGS FROM STARLINK LOCATION TO RACK (MDF) LOCATION
8. CONTRACTOR TO SUPPLY MIDDLE ATLANTIC 18U 30" WALL MOUNTED RACK - LOCKABLE -INSTALL 48 PORT PATCH PANEL
9. OWNER TO SUPPLY BACK-UP POWER SUPPLY & POWER STRIPS FOR DATA RACK. CONTRACTOR TO SUPPLY TWO DEDICATED 20 AMP POWER FOR IT RACK
10. PROVIDE (7) 2 1/2" COUNTER GROMENTS FOR COMPUTER CABLES - LOCATION TO BE DETERMINED BY OWNER AFTER COUNTERTOP INSTALLATION
11. ALL NOTED TV LOCATIONS TO RECIEVE 2x WALL BACKING FOR MOUNT. COORDINATE LOCATION WITH OWNER.
12. OWNER WILL INSTALL ALL TVS & MOUNTS - CONTRACTOR TO PROVIDE POWER & DATA TO EACH LOCATION SHOWN ON PLAN.
13. CABLE TRAY TO BE A STEEL FORMED WIRE CABLE TRAY TO THE LENGTH SHOWN.
14. SIPS MANUFACTURE TO SUPPLY SEPERATE DATA CABLE CHASES FOR DATA CABLES. - SHOW CHASES IN SHOP DRAWINGS FOR COORDINATION.
15. CONTRACTOR TO PROVIDE GROUNDING BAR AT ANTENNA & STARLINK LOCATIONS (CONNECTED TO EARTH GROUND)
16. CONTRACTOR TO STUB OUT 2" PVC CONDUIT 20'-0" FROM BUILDING FOR FUEL ISLAND SHUT OFF.
17. CONTRACTOR TO STUB OUT 2" PVC CONDUIT 20'-0" FROM BUILDING TOWARDS FUEL ISLAND FOR VEEDER-ROOT FUEL MANAGEMENT SYSTEM.

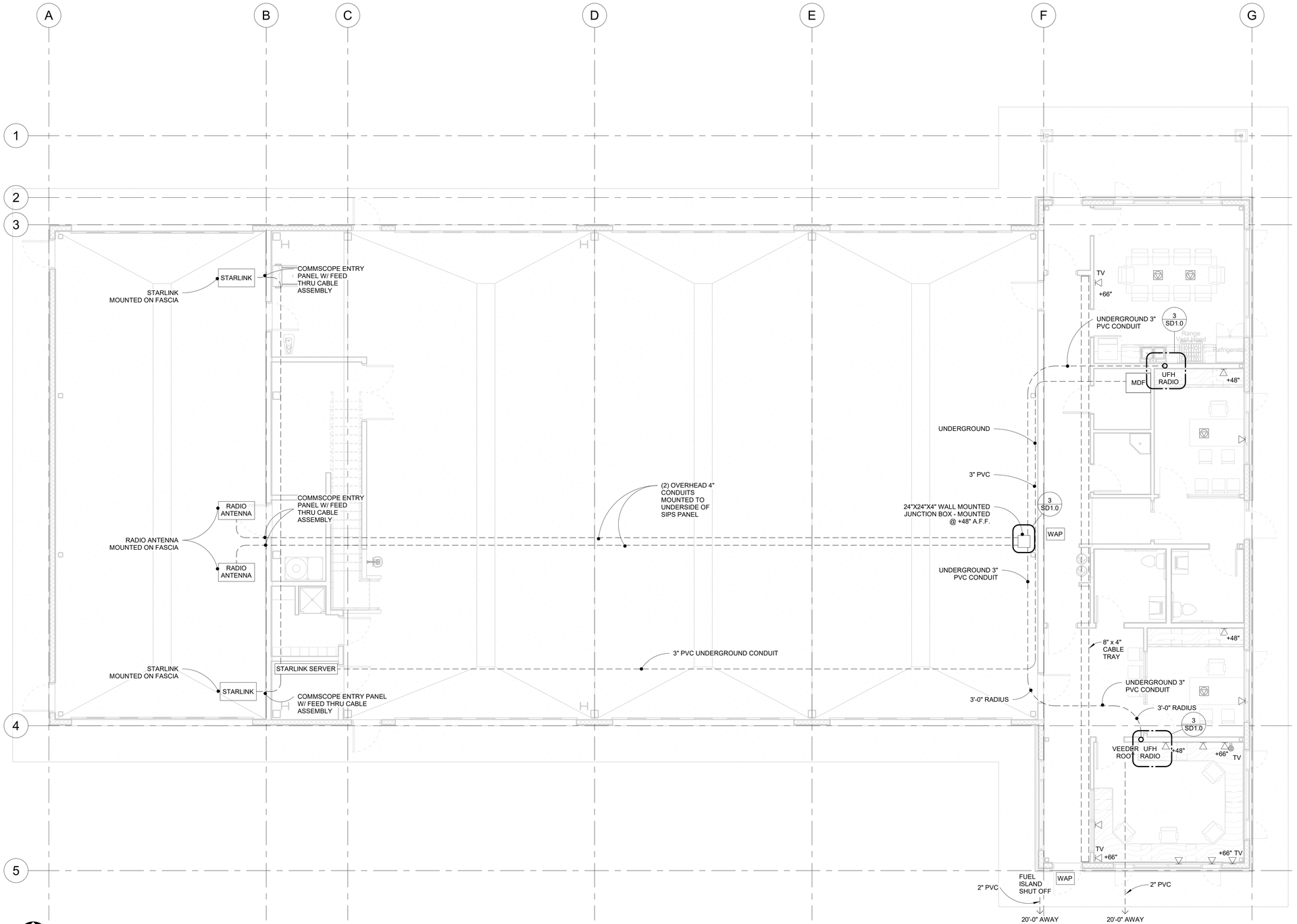

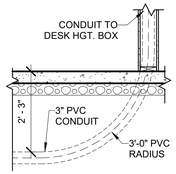

3 PVC CONDUIT INT.
1/2" = 1'-0"

Level 1 Data Plan
3/16" = 1'-0"

S:\ITD Powell Station\CD's\ITD Powell Station - Maintenance_Revision.rvt

3/23/2023 8:57:02 AM

MILLER STAUFFER ARCHITECTS
601 E. FRONT AVE., STE 201
COEUR D' ALENE, IDAHO 83814
P 208.664.1773 F 208.667.3174
WWW.MILLERSTAUFFER.COM

Schematic Data Plan

Permit / Bid Set

2-17-2023

Powell Sta. Maintenance
Highway 12 @ Milepost 162.5
Powell Station, Idaho

LICENSED ARCHITECT
AR-984031
MICHEAL P. WALKER
STATE OF IDAHO

No.	Description	Date

PROJECT NUMBER 2206
PRINCIPAL Designer
PROJECT MANAGER Author

SD1.0