textiles

program guide

09.23.2024

tekniON

update summary

Please be advised that information has been updated within the Textiles Program Guide. To highlight these updates, a summary has been created for your reference.

new

New colorways have been added:

- Median (Panel Gr. 5, Architectural Gr. 3, Upholstery Gr. 4)
- Datastorm (Upholstery Gr. 9)
- Trichroma (Upholstery Gr. 4)
- Lithoprint (Upholstery Gr. 4)

Please note, first orders for new products will be accepted on September 23, 2024. All software will also be updated by September 23, 2024. If you have any questions regarding the information enclosed, please contact your Teknion Customer Service Representative.

table of contents

PANEL FABRICS 5

UPHOLSTERY FABRICS 28

GENERAL INFORMATION 96

Textiles are vital to an interior's finish palette, balancing the visual aesthetics of color, pattern and weave with tactile qualities and technical performance to reinforce a space's overall feel and function.

panel fabric

PANEL FABRICS

SYSTEMS 6

CASEGOODS & CUSTOM WOOD 8

ARCHITECTURAL INTERIORS 10

LISTING MATRICES

PANEL 12

XPRESS 16

ENVIRONMENTAL DATA 17

ARCHITECTURAL FABRICS

ARCHITECTURAL INTERIORS 20

LISTING MATRICES 22

ENVIRONMENTAL DATA 25

panel fabrics

SYSTEMS

Available
Not Available

	PANEL		SCREENS							FREESTANDING				
	DISTRICT FASCIAS	LEVERAGE ELEMENTS	FRAMED	EXPANSION DESKING FRAMED	EXPANSION LEARNING FRAMED	HAB	INFINITY	QUILTED INFINITY	SLIDING FABRIC	BOOKCASE FABRIC TILE & DIVIDERS	FRAMED ADD-ON BOARDS	KIOSK & ROUTES ADD-ON BOARDS	ZONES BUFFERS - FLAT	ZONES EASELS
SAMPLE CARDS														
GRADE A														
Beeline	■	■	■	□	□	■	■	■	■	■	■	□	■	■
Bitstream	■	■	■	■	■	■	■	■	■	■	□	□	■	■
Egypt	■	■	■	■	■	■	■	■	■	■	■	□	■	■
Nitty Gritty	■	■	■	■	■	■	■	■	■	■	■	□	■	■
Tangle	■	■	■	■	■	■	■	■	■	■	■	□	■	■
Wales	■	■	■	■	■	■	■	■	■	■	■	□	■	■
Wired Up	■	■	■	■	■	■	■	■	■	■	■	□	■	■
GRADE 1														
Bandeau	■	■	■	■	■	■	■	■	■	■	■	□	■	■
Emit	■	■	■	■	■	■	■	■	■	■	■	□	■	■
Essentials	■	■	■	■	■	■	■	■	■	■	■	□	■	■
Flicker	■	■	■	■	■	■	■	■	■	■	■	□	■	■
Heather Tech	■	■	■	■	■	■	■	■	■	■	■	□	■	■
India	■	■	■	■	■	■	■	■	■	■	■	■	■	■
Linen Weave	■	■	■	■	■	■	■	■	■	■	■	□	■	■
Lustrado	■	■	■	■	■	■	■	■	■	■	■	□	■	■
Makah	■	■	■	■	■	■	■	■	■	■	■	□	■	■
Peru	■	■	■	■	■	■	■	■	■	■	■	□	■	■
Presse	■	■	■	■	■	■	■	■	■	■	■	□	■	■
Rationale	■	■	■	■	■	■	■	■	■	■	■	□	■	■
Topology	■	■	■	■	■	■	■	■	■	■	■	□	■	■
Warp Speed	■	■	■	■	■	■	■	■	■	■	■	□	■	■

Continued on the following page.

panel fabrics (continued)

SYSTEMS (continued)

Available
Not Available

	PANEL		SCREENS							FREESTANDING				
	DISTRICT FASCIAS	LEVERAGE ELEMENTS	FRAMED	EXPANSION DESKING FRAMED	EXPANSION LEARNING FRAMED	HAB	INFINITY	QUILTED INFINITY	SLIDING FABRIC	BOOKCASE FABRIC TILE & DIVIDERS	FRAMED ADD-ON BOARDS	KIOSK & ROUTES ADD-ON BOARDS	ZONES BUFFERS - FLAT	ZONES EASELS
SAMPLE CARDS														
GRADE 2														
Actuate	■	■	■	■	■	■	■	■	■	■	□	□	■	■
Boucle Grid	■	■	■	■	■	■	■	□	■	■	■	□	■	■
Complect	■	■	■	■	■	■	■	□	■	■	□	□	■	■
Complement	■	■	■	■	■	■	■	■	■	■	□	□	■	■
Crossgrain	■	■	■	■	■	■	■	□	■	■	□	□	■	■
Digi Tweed	■	■	■	■	■	■	■	■	■	■	□	□	■	■
Graviton	■	■	■	■	■	■	■	■	■	■	□	□	■	■
Megacheck	■	■	■	■	■	■	■	■	■	■	□	□	■	■
Percept	■	■	■	■	■	■	■	■	■	■	□	□	■	■
Stratiform	■	■	■	■	■	■	■	■	■	■	■	□	■	■
Twining	■	■	■	□	■	■	■	□	■	■	■	□	■	■
GRADE 3														
Artopia	■	■	■	■	■	■	■	■	□	■	■	□	■	□
Cross Dye	■	■	■	■	■	■	■	□	□	■	□	□	■	■
GRADE 4														
Intone	■	■	□	■	■	■	□	□	□	□	□	□	■	■
Intraweb	■	■	■	■	■	■	■	■	■	■	□	□	■	■
Milieu	■	■	■	■	■	■	■	■	■	■	□	□	■	■
Texture Map	■	■	■	■	■	■	■	■	■	■	□	□	■	■
Twisted Tweed	■	■	■	■	■	■	■	□	■	■	□	□	■	■
GRADE 5														
Ecotone	■	■	■	■	■	■	■	□	■	■	□	□	■	■
High Frequency	■	■	■	■	■	■	■	□	■	■	□	□	■	■
Marl Cloth	■	■	■	■	■	□	■	□	■	■	□	□	■	□
Median	■	■	□	■	□	■	■	■	■	■	■	□	■	■
GRADE 6														
Demi Boucle	□	□	■	□	□	□	□	□	□	□	□	□	□	□

panel fabrics (continued)

CASEGOODS & CUSTOM WOOD

Available
Not Available

	CASEGOODS						CUSTOM WOOD		
	CHRONICLE TACKABLE WALL PANELS	DOSSIER TACKABLE WALL PANELS	EMOTE TACKABLE WALL PANELS	JOURNAL TACKABLE WALL PANELS	EXPANSION CASEGOODS	LITE WOOD OFFICE	C+D CONFERENCE TABLE	COMMUNITY TABLE	TEKNION RECEPTION
SAMPLE CARDS									
GRADE A									
Beeline	■	■	■	■					
Bitstream	■		■	■	■				
Egypt	■	■	■	■	■				
Nitty Gritty	■	■	■	■	■				
Tangle	■	■	■	■	■				
Wales	■		■		■				
Wired Up	■	■	■	■	■				
GRADE 1									
Bandeau	■	■	■	■	■				
Emit	■	■	■	■	■				
Essentials	■	■	■	■	■				
Flicker	■	■	■	■	■				
Heather Tech	■	■	■	■	■				
India	■	■	■	■	■				
Linen Weave	■	■	■	■	■				
Lustrado	■	■	■	■	■				
Makah	■	■	■	■	■				
Peru	■	■	■	■	■				
Presse	■	■	■	■	■				
Rationale	■	■	■	■	■				
Topology	■	■	■	■	■				
Warp Speed	■	■	■	■	■				

Continued on the following page.

panel fabrics (continued)

CASEGOODS & CUSTOM WOOD (continued)

Available
Not Available

	CASEGOODS						CUSTOM WOOD		
	CHRONICLE TACKABLE WALL PANELS	DOSSIER TACKABLE WALL PANELS	EMOTE TACKABLE WALL PANELS	JOURNAL TACKABLE WALL PANELS	EXPANSION CASEGOODS	LITE WOOD OFFICE	C+D CONFERENCE TABLE	COMMUNITY TABLE	TEKNION RECEPTION
SAMPLE CARDS									
GRADE 2									
Actuate	■	■	■	■	■				
Boucle Grid	■	■	■	■	■				
Complect	■	■	■	■	■				
Complement	■	■	■	■	■				
Crossgrain	■	■	■	■	■				
Digi Tweed	■	■	■	■	■				
Graviton	■	■	■	■	■				
Megacheck	■	■	■	■	■				
Percept	■	■	■	■	■				
Stratiform	■		■		■				
Twining	■	■	■	■					
GRADE 3									
Artopia	■	■	■	■	■				
Cross Dye	■		■	■	■				
GRADE 4									
Intone		■		■	■				
Intraweb		■		■	■				
Milieu		■		■	■				
Texture Map		■		■	■				
Twisted Tweed		■		■	■				
GRADE 5									
Ecotone		■		■	■				
High Frequency		■		■	■				
Marl Cloth					■				
Median	■	■	■	■	■				
GRADE 6									
Demi Boucle									

panel fabrics

ARCHITECTURAL INTERIORS

Available
Not Available

	ARCHITECTURAL INTERIORS								ARCHITECTURAL COMPLEMENTS			
	AI HEALTHCARE	ALTOS	FOCUS	OPTOS	POD	TEK VUE	TELESCOPE	WITHIN	ARTICULATE	CLARIFY	MARKERBOARDS	MULLIONS
SAMPLE CARDS												
GRADE A												
Beeline												
Bitstream												
Egypt												
Nitty Gritty												
Tangle												
Wales												
Wired Up												
GRADE 1												
Bandeau												
Emit												
Essentials												
Flicker												
Heather Tech												
India												
Linen Weave												
Lustrado												
Makah												
Peru												
Presse												
Rationale												
Topology												
Warp Speed												

Continued on the following page.

panel fabrics

ARCHITECTURAL INTERIORS (continued)

Available
Not Available

	ARCHITECTURAL INTERIORS								ARCHITECTURAL COMPLEMENTS			
	AI HEALTHCARE	ALTOS	FOCUS	OPTOS	POD	TEK VUE	TELESCOPE	WITHIN	ARTICULATE	CLARIFY	MARKERBOARDS	MULLIONS
SAMPLE CARDS												
GRADE 2												
Actuate								Available	Available	Available	Available	Available
Boucle Grid								Available	Available	Available	Available	Available
Complect								Available	Available	Available	Available	Available
Complement								Available	Available	Available	Available	Available
Crossgrain								Available	Available	Available	Available	Available
Digi Tweed								Available	Available	Available	Available	Available
Graviton								Available	Available	Available	Available	Available
Megacheck								Available	Available	Available	Available	Available
Percept								Available	Available	Available	Available	Available
Stratiform								Available		Available	Available	Available
Twining								Available		Available	Available	Available
GRADE 3												
Artopia								Available	Available	Available	Available	Available
Cross Dye									Available		Available	Available
GRADE 4												
Intone								Available	Available	Available	Available	Available
Intraweb									Available	Available	Available	Available
Milieu									Available	Available	Available	Available
Texture Map									Available	Available	Available	Available
Twisted Tweed								Available		Available	Available	Available
GRADE 5												
Ecotone								Available		Available	Available	Available
High Frequency												
Marl Cloth												
Median									Available		Available	Available
GRADE 6												
Demi Boucle									Available	Available	Available	Available

listing matrices

PANEL FABRICS

GRADE A

Beeline
- Plumb B631
- String. B632
- Strand B633
- Thread B634

Bitstream
- Tablet R582
- Hardware. R583
- Trackback R584
- Lithium R585
- Grey Code R586
- Silicone R587
- White Noise R588
- Xenon R589
- Wavelet R590
- Blue Team R591
- Firewire R592
- Flash Drive R593

Egypt
- Cairo E301
- Giza. E302
- Port Said E304
- Suez. E305
- Mallawi E352
- Jirja E354
- Idku. E355
- Edfu E356

Nitty Gritty
- Block N122
- Detail N123
- Think. N130
- Gist N133
- Factor N134
- Specific N135

Tangle
- Snarl T531
- Knot T532
- Interweave T533
- Ravel T534
- Kinks. T535
- Spangle T536
- Tousle T537
- Crook T538
- Muddle T539
- Entwine. T540

Wales
- Swansea W402
- Teifi. W403
- Newport W404
- Wrexham. W414
- Corwen W416
- Bangor. W417
- Newbridge. W418
- Pembroke W419
- Kidwelly W420
- Goodwick W421

GRADE A (Continued)

Wired Up
- Caged W731
- Intermingle W739
- Mesh W740
- Linkage W741
- Drawplate W742
- Nichrome W743
- Circuit. W744

GRADE 1

Bandeau
- Washi B124
- Grosgrain. B126
- Palla. B127
- Farran B128

Emit
- Watt T727
- Hertz. T728
- Joule T729
- Dazzle T730
- Surge T731
- Particle T732

Essentials
- Gris E380
- Dove E382
- Brier E383
- Light Grey. E384
- Slate. E385
- Banner. E391
- Snowdrift. E409
- Mist. E410
- Basil. E412
- Atlantic E413
- Pebble E415
- Tropic E416

Flicker
- Glitter F531
- Beam F532
- Sparkle. F533
- Flash F534
- Glint F535
- Sheen. F536
- Gleam F537
- Glow F538
- Luster F539
- Twinkle. F540

GRADE 1 (Continued)

Heather Tech
- Dust Tech R240
- Topaz Tech R241
- Oat Tech. R242
- Flax Tech. R243
- Silt Tech R244
- Loam Tech R245
- Crag Tech R246
- Basalt Tech R247
- Loden Tech R248
- Sagebrush Tech R249
- Meadow Tech R250
- Sundew Tech. R251
- Rose Tech R252
- Raspite Tech R253
- Madder Tech. R254
- Beetroot Tech R255
- Thistle Tech. R256
- Lav Tech R257
- Clear Tech. R258
- Loch Tech R259
- Ocean Tech. R260
- North Sea Tech R261
- Onyx Tech R262
- Obsidian Tech. R263

India
- Bombay. D402
- Agra. D404
- Gwalior D405
- Varanasi. D407
- Haora D408
- Surat D409
- Manali. D425
- Kashmir. D417
- Pushkar D418
- Kerala D419
- Chennai. D422
- Mumbai. D424
- Pune D423
- Munnar. D420
- Nanital D421

Linen Weave
- Gate. L308
- Sesame. L309
- Coir. L327
- Bast L328
- Dusty Grey L329
- Mineral L330
- Linseed L331

listing matrices (continued)

PANEL FABRICS (continued)

GRADE 1 (Continued)

Lustrado
- Glassine L363
- Acetate L364
- Brilliance L365
- Gallium L367
- Sterling L370

Makah
- Shaker M415
- Luminous M416
- Arundo M417
- Solano M418
- Flitch M419
- Splint M420

Peru
- Nazca P402
- Lima P403
- Casma P404
- Puno P405
- Cuzco P406
- Tingo Maria P407
- Callao P409
- Tumbes P411

Presse
- Halo Effect P100
- Overlay P101
- Masked P102
- Relief P103
- Plaited P104
- Gravure P105

Rationale
- Classical R380
- Drift R381
- Firma R382
- Lucid R383
- Abstract R384
- Mind's Eye R385
- Infinite R386
- Transcend R387

Topology
- Ceramic T100
- Open Space T101
- Natural T102
- Cooling T103
- Shadow T104

Warp Speed
- Headwind W110
- White Space W111
- Strobe W112
- Reed Arrow W113
- Jet W114
- Steel Racer W115
- Earth Orbit W116

GRADE 2

Actuate
- Aqueous T740
- Spectral T741
- Aether T742
- Facet T743
- Syntax T744
- Vanish T745
- Suffuse T746
- Mordant T747
- Lambent T748
- Conscious T749
- Fortify T750
- Favrile T751
- Prelude T752
- Meridian T753
- Thermal T754
- Induction T755

Boucle Grid
- Craie B119
- Bis B120
- Ardoise B121
- Fauve B122
- Nuage B123

Complect
- Melanite P800
- Quarry P801
- Silverleaf P802
- Jute P803
- Cumulus P804
- Yolk P805
- Apricot P806
- Highlighter Pink P807
- Deep Crimson P808
- Autumn P809
- Opaline P810
- Reservoir P811
- Gentian P812
- Blue Ice P813
- Winter P814
- Boreal P815
- Turquoise P816
- Okra P817
- Agave **P818**

Complement
- Nightfall C279
- Dusk C280
- Grey Wolf C281
- Sea Salt C282
- Roan C283
- Amarillo C284
- Arancia C285
- Carnelian C286
- Garnet C287
- Fresh Air C289
- Peacock C290

GRADE 2 (Continued)

Crossgrain
- Underbrush G157
- Dado G158
- Blackwood G159
- Cove G160
- Xylem G161
- Tenon G162
- Amaranth G163
- Red Oak G164
- Tuliptree G165
- Iroko G166
- Ginkgo G167
- Burl G168
- Cypress G169
- Springwood G170
- Driftwood G171

Digi Tweed
- Dust Tweed B130
- Topaz Tweed B131
- Oat Tweed B132
- Flax Tweed B133
- Silt Tweed B134
- Loam Tweed B135
- Crag Tweed B136
- Basalt Tweed B137
- Loden Tweed B138
- Sagebrush Tweed B139
- Meadow Tweed B140
- Sundew Tweed B141
- Rose Tweed B142
- Raspite Tweed B143
- Madder Tweed B144
- Beetroot Tweed B145
- Thistle Tweed B146
- Lav Tweed B147
- Clear Tweed B148
- Loch Tweed B149
- Ocean Tweed B150
- North Sea Tweed B151
- Onyx Tweed B152
- Obsidian Tweed B153

Graviton
- Dark Matter R351
- Chain Reaction R352
- Echo R353
- Cloud Chamber R354
- Albedo R355
- Half Life R356
- Luminous Flux R357
- Fission R358
- Kelvin R359
- Boiling Point R360
- Quantum R361
- Condensation R362
- Centigrade R363
- Ampere R364
- Cold Fusion R365
- Hydrostatic R366

listing matrices (continued)

PANEL FABRICS (continued)

GRADE 2 (Continued)

Megacheck

- Liminal R654
- Convex R655
- Concave R656
- Drop Shadow R657
- Litmus R658
- Gradient R659
- Distort R660
- Resolution R661
- Glitch R662
- Flashbulb R663
- Visage R664
- Magnitude R665

Percept

- Schema C813
- Pristine C814
- Intrinsic C815
- Sublime C817
- Context C818
- Essence C819
- Tenet C820
- Epiphany C821
- Verve C822
- Amplitude C823
- Reason C824
- Cardinality C825
- Nebula C826
- Jubilant C827
- Ignite C828
- Harmonic C829
- Peak C830
- Devotion C831
- Transmit C832
- Render C833
- Pulse C834
- Constant C835
- Radiant C836
- Propogate C837
- Placid C838
- Singular C839
- Fringe C840

Stratiform

- Calcify R600
- Limestone R601
- Sandhill R602
- Moraine R603
- Glacial R604
- Bedrock R605
- Flint R606

Twining

- Ivory Vine W117
- Pale Straw W118
- Abaca W119
- Sisal W120
- Quill W121
- Silvery Strand W122
- Bulrush W123

GRADE 3

Artopia

- Primer R176
- Kinetic R177
- Stencil R178
- Magenta R179
- Amerlith R180
- Cadmium R181
- Aquatint R182
- Vivid Blue R183

Cross Dye

- Earl Grey R150
- Linen R151
- Light Birch R152
- Almond R153
- Soft Shadow R154
- Ace Grey R155
- Cool Ash R156
- Carotene R157
- Crimson R158
- Carmine R159
- Tea Tree R160
- Artichoke R161
- Plum R162
- Watercolor R163
- Azure R164
- Logwood R165

GRADE 4

Intone

- Ash LP11
- Creme LP12
- Harbor LP13
- Quicksilver LP14
- Caraway LP15
- Oxide LP16
- Cinder LP17
- Lute LP18
- Pome LP19
- Eclipse LP20

Intraweb

- Raster W235
- Dual Trace W236
- Polytope W237
- Superposition W238
- Coaxial W239
- Origin W240
- Slope W241
- Polarity W242
- Isosurface W243

GRADE 4 (Continued)

Milieu

- Kettle L165
- Thunder L166
- Memory L167
- Steam L168
- Wing L169
- Nest L170
- Leap L171
- Troupe L172
- Peregrine L173
- Hedge L174
- Prickle L175
- Spring L176
- Muster L177
- Herd L178
- Parcel L179
- Bloom L180
- Fling L181
- Flamboyance L182
- Bazaar L183
- Rabble L184
- Zeal L185
- Bevy L186
- Loft L187
- Float L188
- Paddling L189
- Shoal L190
- Fleet L191

Texture Map

- Mineralize R523
- Henge R524
- Rockfall R525
- Trace Fossil R526
- Windblown Silt R527
- Holocene R528
- Coralline R529
- Latent Heat R530
- Water Table R531
- Elm Pollen R532
- Miocene R533
- Linden R534
- Green Algae R535
- Thaw R536
- Continental Drift R537
- Ocean Basin R538

listing matrices (continued)

PANEL FABRICS (continued)

GRADE 4 (Continued)

Twisted Tweed

- Wrought Iron R325
- Rock Garden R326
- Shady Patch R327
- Moongate R328
- Plaster R329
- Stucco R330
- Thatch R331
- Arbor R332
- Daylight R333
- Sundial R334
- Koi Pond R335
- Brickwork R336
- Annual R337
- Perennial R338
- Rain Chain R339
- Open Air R340
- Water Feature R341
- Terrace R342
- Veranda R343

GRADE 5

Ecotone

- Abyss R285
- Ravine R286
- Rocky Shore R287
- Permafrost R288
- Tundra R289
- Arid R290
- Savanna R291
- Desert Bloom R292
- Badlands R293
- Caldera R294
- Freshwater R295
- Intertidal R296
- Rain Shadow R297
- Lichen R298
- Mangrove R299
- Treeline R300

High Frequency

- Eclipse Shadow R264
- Flash Lag R265
- Motion Blur R266
- Moon Illusion R267
- Solar Halo R268
- Laser Speckle R269
- Photon Shot R270
- Sea Fret R271
- Fata Morgana R272
- Hyperbolic Green R273
- Iceblink R274
- Plane Wave R275
- Liquid Crystal R276
- Aftereffect R277
- Gaussian R278
- Occlusion R279

GRADE 5 (Continued)

Marl Cloth

- Yurt R166
- Dry Stone R170
- Blacksmith R173
- Sea Nomad R174
- Wild Fruit R175
- Dreamscape R195
- Landmark R196
- Tree Bark R197

Median

- Bracken R607
- Cinquefoil R608
- Metallic Salt R609
- Downy Phlox R610
- Condensata R611
- Calcofluor R612
- Alder Cone R613
- Birch Leaf R614
- Leblanc R615
- Jaune R616
- Grana R617
- Comandra R618
- Mignonette R619
- Rubia R620
- Murex R621
- Phoenician R622
- Isatia R623
- Tinctoria R624
- Prairie Bluet R625
- Popinjay R626
- Herbal R627
- Verdulet R628

GRADE 6

Demi Boucle

- Caviar R425
- Chia R426
- Wishbone R427
- Epsom R428
- Talc R429
- Igneous R430
- Cloudberry R431
- Downpour R432
- Crocus R433
- Keemun R434
- Desert Peach R435
- Moss-Rose R436
- Spun Sugar R437
- Sanddollar R438
- Chamomile R439
- Sea Glass R440
- Scarab R441
- Nori R442

listing matrices (continued)

XPRESS PANEL FABRICS

GRADE A

Beeline
- String B632
- Strand B633

Egypt
- Jirja E354

Nitty Gritty
- Gist N133

Tangle
- Snarl T531
- Knot T532
- Interweave T533
- Ravel T534
- Muddle T539
- Entwine T540

Wales
- Swansea W402
- Wrexham W414
- Corwen W416
- Bangor W417

Wired Up
- Intermingle W739
- Linkage W741
- Nichrome W743

GRADE 1

Bandeau
- Grosgrain B126
- Palla B127
- Farran B128

Emit
- Hertz T728
- Joule T729
- Dazzle T730

Flicker
- Glitter F531
- Beam F532
- Sparkle F533
- Glint F535
- Sheen F536
- Gleam F537
- Glow F538
- Twinkle F540

India
- Bombay D402
- Gwalior D405
- Manali D425

Linen Weave
- Bast L328
- Dusty Grey L329
- Mineral L330
- Linseed L331

Lustrado
- Glassine L363

Makah
- Solano M418
- Splint M420

Peru
- Nazca P402

Presse
- Overlay P101

Rationale
- Classical R380
- Lucid R383
- Abstract R384
- Mind's Eye R385
- Infinite R386

Warp Speed
- Reed Arrow W113

GRADE 2

Twining
- Ivory Vine W117
- Pale Straw W118
- Quill W121
- Silvery Strand W122

environmental data

PANEL FABRICS

PATTERN	COMPOSITION	RECYCLED POLYESTER	
		POST CONSUMER	PRE CONSUMER
GRADE A			
Beeline	100% Recycled Polyester	39%	61%
Bitstream	100% Recycled Polyester	58%	42%
Egypt	100% Recycled Polyester		100%
Nitty Gritty	100% Recycled Polyester		100%
Tangle	80% Recycled Polyester, 20% Polyester		80%
Wales	93% Recycled Polyester, 7% Polyester		93%
Wired Up	100% Recycled Polyester	45%	55%
GRADE 1			
Bandeau	100% Recycled Polyester		100%
Emit	44% Recycled Polyester, 56% Polyester	29%	15%
Essentials	100% Recycled Polyester	35%	65%
Flicker	100% Recycled Polyester	46%	54%
Heather Tech	67% Recycled Polyester, 33% Polyester	100%	
India	78% Recycled Polyester, 22% Polyester	78%	
Linen Weave	100% Recycled Polyester		100%
Lustrado	75% Recycled Polyester, 25% Polypropylene		75%
Makah	100% Recycled Polyester	54%	46%
Peru	100% Recycled Polyester	34%	66%
Presse	100% Recycled Polyester		100%
Rationale	80% Recycled Polyester, 20% Polyester	80%	
Topology	53% Recycled Polyester, 47% Polyester		53%
Warp Speed	67% Recycled Polyester, 33% Polyester		67%

environmental data (continued)

PANEL FABRICS (continued)

PATTERN	COMPOSITION	RECYCLED POLYESTER	
		POST CONSUMER	PRE CONSUMER
GRADE 2			
Actuate	40% Recycled Polyester 60% Polyester	40%	
Boucle Grid	100% Recycled Polyester		100%
Complect	100% Recycled Polyester	100%	
Complement	100% Polyester		
Crossgrain	100% Polyester		
Digi Tweed	55% Recycled Polyester 45% Polyester	100%	
Graviton	100% Recycled Polyester	100%	
Megacheck	100% Recycled Polyester		
Percept	81% Recycled Polyester 19% Polyester	81%	
Stratiform	52% Recycled Polyester 48% Polypropylene	43%	9%
Twining	100% Recycled Polyester		100%
GRADE 3			
Artopia	100% Polyester		
Cross Dye	66% Recycled Polyester 34% Polyester	61%	5%
GRADE 4			
Intone	53% Recycled Polyester 47% Polyester	34.4%	18.6%
Intraweb	100% Recycled Biodegradable** Polyester (Postconsumer)		
Milieu	90% Recycled Polyester, 10% Polyester	90%	
Texture Map	100% Recycled Biodegradable** Polyester		
Twisted Tweed	100% Recycled Polyester	100%	

** Rate and extent of biodegradation into elements found in nature is 91% after 1,278 days under ASTM D5511 (Anaerobic Biodegradation of Plastic Materials Under High Solids Anaerobic Digestion Conditions.) The test was done with the same component (PET) polyester and biocatalyst additive. No evidence of further degradation.

environmental data (continued)

PANEL FABRICS (continued)

PATTERN	COMPOSITION	RECYCLED POLYESTER	
		POST CONSUMER	PRE CONSUMER
GRADE 5			
Ecotone	100% Recycled Biodegradable** Polyester		
High Frequency	87% Recycled Polyester (Postconsumer), 12% Polyester, 1% Nylon		
Marl Cloth	57% Recycled Polyester 42% Polyester, 1% Nylon	30%	27%
Median	60% Polyester, 40% Recycled Polyester	40%	
GRADE 6			
Demi Boucle	100% Recycled Polyester	100%	

** Rate and extent of biodegradation into elements found in nature is 91% after 1,278 days under ASTM D5511 (Anaerobic Biodegradation of Plastic Materials Under High Solids Anaerobic Digestion Conditions.) The test was done with the same component (PET) polyester and biocatalyst additive. No evidence of further degradation.

architectural fabrics

ARCHITECTURAL INTERIORS

Available
Not Available

	ARCHITECTURAL INTERIORS								ARCHITECTURAL COMPLEMENTS			
	AI HEALTHCARE	ALTOS	FOCUS	OPTOS	POD	TEK VUE	TELESCOPE	WITHIN	ARTICULATE	CLARIFY	MARKERBOARDS	MULLIONS
SAMPLE CARDS												
GRADE 1												
Rationale		■			■			■	■	■	■	■
GRADE 2												
Actuate		■			■			■	■	■	■	■
Artopia		■			■			■	■	■	■	■
Bandeau		■			■			■	■	■	■	■
Bitstream		■			■			■	■	■	■	■
Boucle Grid		■			■			■	■	■	■	■
Complect		■			■			■	■	■	■	■
Complement		■			■			■	■	■	■	■
Crossgrain		■			■			■	■	■	■	■
Digi Tweed		■			■			■	■	■	■	■
Emit		■			■			■	■	■	■	■
Graviton		■			■			■	■	■	■	■
Heather Tech		■			■			■	■	■	■	■
Intone		■			■			■	■	■	■	■
Lustrado		■			■			■	■	■	■	■
Megacheck		■			■			■	■	■	■	■
Percept		■			■			■	■	■	■	■
Presse		■			■			■	■	■	■	■
Stratiform		■			■			■	■	■	■	■
Twining		■			■			■	■	■	■	■
GRADE 3												
Ecotone		■			■			■	■	■	■	■
Grid State		■			■				■	■	■	■
Intraweb		■			■			■	■	■	■	■
Median		■						■	■	■		
Milieu		■			■			■	■	■	■	■
Texture Map		■			■			■	■	■	■	■
Twisted Tweed		■			■			■	■	■	■	■

Continued on the following page.

architectural fabrics (continued)

ARCHITECTURAL INTERIORS (continued)

Available
Not Available

	ARCHITECTURAL INTERIORS								ARCHITECTURAL COMPLEMENTS			
	AI HEALTHCARE	ALTOS	FOCUS	OPTOS	POD	TEK VUE	TELESCOPE	WITHIN	ARTICULATE	CLARIFY	MARKERBOARDS	MULLIONS
SAMPLE CARDS												
GRADE 4												
High Frequency												
Juxtapose												
GRADE 6												
Demi Boucle												

listing matrices (continued)

ARCHITECTURAL FABRICS

GRADE 1

Rationale

- Classical B380
- Drift B381
- Firma B382
- Lucid B383
- Abstract B384
- Mind's Eye B385
- Infinite B386
- Transcend B387

GRADE 2

Actuate

- Aqueous A209
- Spectral A210
- Aether A211
- Facet A212
- Syntax A213
- Vanish A214
- Suffuse A215
- Mordant A216
- Lambent A217
- Conscious A218
- Fortify A219
- Favrile A220
- Prelude A221
- Meridian A222
- Thermal A223
- Induction A224

Artopia

- Primer R230
- Kinetic R231
- Stencil R232
- Magenta R233
- Amerlith R234
- Cadmium R235
- Aquatint R236
- Vivid Blue R237

Bandeau

- Washi D111
- Grosgrain D113
- Palla D114
- Farran D115

Bitstream

- Tablet B582
- Hardware B583
- Trackback B584
- Lithium B585
- Grey Code B586
- Silicone B587
- White Noise B588
- Xenon B589
- Wavelet B590
- Blue Team B591
- Firewire B592
- Flash Drive B593

GRADE 2 (Continued)

Boucle Grid

- Craie C111
- Bis C112
- Ardoise C113
- Fauve C114
- Nuage C115

Complect

- Melanite C293
- Quarry C294
- Silverleaf C295
- Jute C296
- Cumulus C297
- Yolk C298
- Apricot C299
- Highlighter Pink C300
- Deep Crimson C301
- Autumn C302
- Opaline C303
- Reservoir C304
- Gentian C305
- Blue Ice C306
- Winter C307
- Boreal C308
- Turquoise C309
- Okra C310
- Agave C311

Complement

- Nightfall T148
- Dusk T149
- Grey Wolf T150
- Sea Salt T151
- Roan T152
- Amarillo T153
- Arancia T154
- Carnelian T155
- Garnet T156
- Fresh Air T158
- Peacock T159

Crossgrain

- Underbrush C157
- Dado C158
- Blackwood C159
- Cove C160
- Xylem C161
- Tenon C162
- Amaranth C163
- Red Oak C164
- Tuliptree C165
- Iroko C166
- Ginkgo C167
- Burl C168
- Cypress C169
- Springwood C170
- Driftwood C171

GRADE 2 (Continued)

Digi Tweed

- Dust Tweed D310
- Topaz Tweed D311
- Oat Tweed D312
- Flax Tweed D313
- Silt Tweed D314
- Loam Tweed D315
- Crag Tweed D316
- Basalt Tweed D317
- Loden Tweed D318
- Sagebrush Tweed D319
- Meadow Tweed D320
- Sundew Tweed D321
- Rose Tweed D322
- Raspite Tweed D323
- Madder Tweed D324
- Beetroot Tweed D325
- Thistle Tweed D326
- Lav Tweed D327
- Clear Tweed D328
- Loch Tweed D329
- Ocean Tweed D330
- North Sea Tweed D331
- Onyx Tweed D332
- Obsidian Tweed D333

Emit

- Watt E314
- Hertz E315
- Joule E316
- Dazzle E317
- Surge E318
- Particle E319

Graviton

- Dark Matter G222
- Chain Reaction G223
- Echo G224
- Cloud Chamber G225
- Albedo G226
- Half Life G227
- Luminous Flux G228
- Fission G229
- Kelvin G230
- Boiling Point G231
- Quantum G232
- Condensation G233
- Centigrade G234
- Ampere G235
- Cold Fusion G236
- Hydrostatic G237

listing matrices (continued)

ARCHITECTURAL FABRICS (continued)

GRADE 2 (Continued)

Heather Tech

- Dust Tech T162
- Topaz Tech T163
- Oat Tech T164
- Flax Tech T165
- Silt Tech T166
- Loam Tech T167
- Crag Tech T168
- Basalt Tech T169
- Loden Tech T170
- Sagebrush Tech T171
- Meadow Tech T172
- Sundew Tech T173
- Rose Tech T174
- Raspite Tech T175
- Madder Tech T176
- Beetroot Tech T177
- Thistle Tech T178
- Lav Tech T179
- Clear Tech T180
- Loch Tech T181
- Ocean Tech T182
- North Sea Tech T183
- Onyx Tech T184
- Obsidian Tech T185

Intone

- Ash LM12
- Creme LM13
- Harbor LM14
- Quicksilver LM15
- Caraway LM16
- Oxide LM17
- Cinder LM18
- Lute LM19
- Pome LM20
- Eclipse LM21

Lustrado

- Glassine D100
- Acetate D101
- Brilliance D102
- Gallium D104
- Sterling D107

Megacheck

- Liminal M328
- Convex M329
- Concave M330
- Drop Shadow M331
- Litmus M332
- Gradient M333
- Distort M334
- Resolution M335
- Glitch M336
- Flashbulb M337
- Visage M338
- Magnitude M339

GRADE 2 (Continued)

Percept

- Schema P106
- Pristine P107
- Intrinsic P108
- Sublime P110
- Context P111
- Essence P112
- Tenet P113
- Epiphany P114
- Verve P115
- Amplitude P116
- Reason P117
- Cardinality P118
- Nebula P119
- Jubilant P120
- Ignite P121
- Harmonic P122
- Peak P123
- Devotion P124
- Transmit P125
- Render P126
- Pulse P127
- Constant P128
- Radiant P129
- Propogate P130
- Placid P131
- Singular P132
- Fringe P133

Presse

- Halo Effect R186
- Overlay R187
- Masked R188
- Relief R189
- Plaited R190
- Gravure R191

Stratiform

- Calcify B590
- Limestone B591
- Sandhill B592
- Moraine B593
- Glacial B594
- Bedrock B595
- Flint B596

Twining

- Ivory Vine T141
- Pale Straw T142
- Abaca T143
- Sisal T144
- Quill T145
- Silvery Strand T146
- Bulrush T147

GRADE 3

Ecotone

- Abyss E136
- Ravine E137
- Rocky Shore E138
- Permafrost E139
- Tundra E140
- Arid E141
- Savanna E142
- Desert Bloom E143
- Badlands E144
- Caldera E145
- Freshwater E146
- Intertidal E147
- Rain Shadow E148
- Lichen E149
- Mangrove E150
- Treeline E151

Grid State

- Arc Flash G132
- Open Circuit G133
- Volt Switch G134
- Hydropower G135
- Switchboard G136
- Megawatt G137
- Circuit Break G138
- Electrode G139
- Live Wire G140
- Turbine G141
- Neon Bulb G142
- Wolfram G143

Intraweb

- Raster T397
- Dual Trace T398
- Polytope T397
- Superposition T400
- Coaxial T401
- Origin T402
- Slope T403
- Polarity T404
- Isosurface T405

listing matrices (continued)

ARCHITECTURAL FABRICS (continued)

GRADE 3 (Continued)

Median

- Bracken M237
- Cinquefoil M238
- Metallic Salt. M239
- Downy Phlox. M240
- Condensata M241
- Calcofluor M242
- Alder Cone M243
- Birch Leaf M244
- Leblanc M245
- Jaune M246
- Grana M247
- Comandra M248
- Mignonette M249
- Rubia. M250
- Murex M251
- Phoenician. M252
- Isatia M253
- Tinctoria M254
- Prairie Bluet. M255
- Popinjay M256
- Herbal M257
- Verdulet. M258

Milieu

- Kettle. M570
- Thunder. M571
- Memory. M572
- Steam. M573
- Wing M574
- Nest. M575
- Leap. M576
- Troupe M577
- Peregrine M578
- Hedge M579
- Prickle M580
- Spring M581
- Muster. M582
- Herd M583
- Parcel. M584
- Bloom M585
- Fling M586
- Flamboyance M587
- Bazaar M588
- Rabble M589
- Zeal M590
- Bevy. M591
- Loft M592
- Float M593
- Paddling M594
- Shoal M595
- Fleet. M596

GRADE 3 (Continued)

Texture Map

- Mineralize T541
- Henge T542
- Rockfall T543
- Trace Fossil T544
- Windblown Silt T545
- Holocene T546
- Coralline T547
- Latent Heat T548
- Water Table. T549
- Elm Pollen. T550
- Miocene. T551
- Linden. T552
- Green Algae. T553
- Thaw T554
- Continental Drift T555
- Ocean Basin. T556

Twisted Tweed

- Wrought Iron T278
- Rock Garden T279
- Shady Patch. T280
- Moongate T281
- Plaster T282
- Stucco T283
- Thatch T284
- Arbor. T285
- Daylight T286
- Sundial T287
- Koi Pond T288
- Brickwork T289
- Annual. T290
- Perennial T291
- Rain Chain T292
- Open Air T293
- Water Feature T294
- Terrace T295
- Veranda T296

GRADE 4

High Frequency

- Eclipse Shadow H713
- Flash Lag H714
- Motion Blur H715
- Moon Illusion H716
- Solar Halo H717
- Laser Speckle H718
- Photon Shot H719
- Sea Fret H720
- Fata Morgana H721
- Hyperbolic Green H722
- Iceblink H723
- Plane Wave H724
- Liquid Crystal H725
- Aftereffect H726
- Gaussian H727
- Occlusion H728

GRADE 4 (Continued)

Juxtapose

- Greenheart. J207
- Yakisugi J208
- Lacquer J209
- Timber J210
- Lumber J211
- Rosewood J212

GRADE 6

Demi Boucle

- Caviar D433
- Chia. D434
- Wishbone D435
- Epsom D436
- Talc D437
- Igneous D438
- Cloudberry D439
- Downpour. D440
- Crocus D441
- Keemun. D442
- Desert Peach D443
- Moss-Rose D444
- Spun Sugar D445
- Sanddollar D446
- Chamomile D447
- Sea Glass D448
- Scarab D449
- Nori. D450

environmental data (continued)

ARCHITECTURAL INTERIORS

PATTERN	COMPOSITION	RECYCLED POLYESTER	
		POST CONSUMER	PRE CONSUMER
GRADE 1			
Rationale	80% Recycled Polyester 20% Polyester	80%	
GRADE 2			
Actuate	40% Recycled Polyester 60% Polyester	40%	
Artopia	100% Polyester		
Bandeau	100% Recycled Polyester		100%
Bitstream	100% Recycled Polyester	58%	42%
Boucle Grid	100% Recycled Polyester		100%
Complect	100% Recycled Polyester	100%	
Complement	100% Polyester		
Crossgrain	100% Polyester		
Digi Tweed	55% Recycled Polyester 45% Polyester	55%	
Emit	44% Recycled Polyester 56% Polyester	29%	15%
Graviton	100% Recycled Polyester	100%	
Heather Tech	67% Recycled Polyester 33% Polyester	67%	
Intone	53% Recycled Polyester 47% Polyester	34.4%	18.6%
Lustrado	75% Recycled Polyester 25% Polypropylene		75%
Megacheck	100% Recycled Polyester		
Percept	81% Recycled Polyester 19% Polyester	81%	
Presse	100% Recycled Polyester		100%
Stratiform	52% Recycled Polyester 48% Polypropylene	43%	9%
Twining	100% Recycled Polyester		100%

** Rate and extent of biodegradation into elements found in nature is 91% after 1,278 days under ASTM D5511 (Anaerobic Biodegradation of Plastic Materials Under High Solids Anaerobic Digestion Conditions.) The test was done with the same component (PET) polyester and biocatalyst additive. No evidence of further degradation.

environmental data (continued)

ARCHITECTURAL INTERIORS (continued)

PATTERN	COMPOSITION	RECYCLED POLYESTER	
		POST CONSUMER	PRE CONSUMER
GRADE 3			
Ecotone	100% Recycled Biodegradable** Polyester		
Grid State	BIODEGRADABLE CLEAN IMPACT TEXTILES™ - 100% Post-Consumer Recycled Biodegradable Polyester**	100%	
Intraweb	100% Recycled Biodegradable* Polyester	100%	
Median	60% Polyester, 40% Recycled Polyester	40%	
Milieu	90% Recycled Polyester, 10% Polyester	90%	
Texture Map	100% Recycled Biodegradable** Polyester		
Twisted Tweed	100% Recycled Polyester	100%	
GRADE 4			
High Frequency	87% Recycled Polyester (Postconsumer), 12% Polyester, 1% Nylon		
Jaxtapose	70% Recycled Polyester, 30% Polyester	70%	
GRADE 5			
Demi Boucle	100% Recycled Polyester	100%	

** Rate and extent of biodegradation into elements found in nature is 91% after 1,278 days under ASTM D5511 (Anaerobic Biodegradation of Plastic Materials Under High Solids Anaerobic Digestion Conditions.) The test was done with the same component (PET) polyester and biocatalyst additive. No evidence of further degradation.

upholstery fabrics

UPHOLSTERY FABRICS

SYSTEMS 29

WORK CHAIRS & STACKING CHAIRS 32

MULTI-USE CHAIRS 38

SOFT SEATING 43

ZONES 47

LISTING MATRICES

UPHOLSTERY 51

XPRESS 60

ENVIRONMENTAL DATA 61

TEXTILE LISTINGS BY PATTERN NAME 67

upholstery fabrics

SYSTEMS

Available
Not Available

	SCREENS							FREESTANDING					
	FRAMED	EXPANSION DESKING FRAMED	EXPANSION LEARNING FRAMED	HAB	INFINITY	QUILTED INFINITY	SLIDING FABRIC	BOOKCASE FABRIC TILE & DIVIDERS	FRAMED ADD-ON BOARDS	KIOSK & ROUTES ADD-ON BOARDS	ZONES BUFFERS - FLAT	ZONES BUFFERS - QUILTED	ZONES EASELS
SAMPLE CARDS													
GRADE 1													
Bitstream									■				
Fundamentals	■			■	■	■	■	■	■		■	■	■
Heather Tech									■	■			
Magnify	■			■	■		■	■	■		■		■
Stimuli	■			■	■		■	■	■				
GRADE 2													
Actuate									■	■	■		■
Complect									■				
Complement									■				
Cross Dye									■				
Crossgrain									■				
Decoy													
Digi Tweed									■	■			
Graviton									■				
Intone										■	■		■
Megacheck									■				
Percept									■		■	■	■
Ultra Durable													
GRADE 3													
Ample				■									■
Doyenne	■			■	■		■		■	■		■	
Ecotone										■	■		
Fine Grain													
Intraweb										■			
Marl Cloth				■						■	■		
Milieu										■			
Situ				■									
Superspun	■			■	■		■		■	■	■	■	
Textured Map											■		
Twisted Tweed										■	■		

Continued on the following page.

upholstery fabrics (continued)

SYSTEMS (continued)

Available
Not Available

	SCREENS							FREESTANDING					
	FRAMED	EXPANSION DESKING FRAMED	EXPANSION LEARNING FRAMED	HAB	INFINITY	QUILTED INFINITY	SLIDING FABRIC	BOOKCASE FABRIC TILE & DIVIDERS	FRAMED ADD-ON BOARDS	KIOSK & ROUTES ADD-ON BOARDS	ZONES BUFFERS - FLAT	ZONES BUFFERS - QUILTED	ZONES EASELS
SAMPLE CARDS													
GRADE 4													
Demi Boucle					■		■	■			■		■
Elastic Wool													
Formwork	■			■	■		■	■	■		■		■
Grid State	■				■		■	■	■		■		■
High Frequency										■			
Interstice				■							■		■
Lithoprint													
Median										■			
Meta Texture													
Modulus											■		■
Trichroma								■					
Velvet Underground													
GRADE 5													
Adage				■						■	■		■
Cult Classic	■			■	■		■	■	■		■		■
Monotex													
Particulate	■			■	■		■	■	■		■		■
Synaptic													
GRADE 6													
Amalgam										■			
Duo Chrome				■	■		■	■			■		■
Haptic	■			■	■		■	■	■		■		
Outpress				■							■		■
Perilune													
Photogram	■			■	■		■	■	■		■		
Soft Static					■		■	■			■		■
Vector				■							■		■

Continued on the following page.

upholstery fabrics (continued)

SYSTEMS (continued)

Available
Not Available

	SCREENS							FREESTANDING					
	FRAMED	EXPANSION DESKING FRAMED	EXPANSION LEARNING FRAMED	HAB	INFINITY	QUILTED INFINITY	SLIDING FABRIC	BOOKCASE FABRIC TILE & DIVIDERS	FRAMED ADD-ON BOARDS	KIOSK & ROUTES ADD-ON BOARDS	ZONES BUFFERS - FLAT	ZONES BUFFERS - QUILTED	ZONES EASELS
SAMPLE CARDS													
GRADE 7													
Contrast Slub													
Ephemera													
Everyday Boucle					■		■	■			■		■
Flex Wool													
Homage				■									
Hyped Up					■		■	■	■		■		■
Oeuvre				■									
Pebble Melange													
Sgraffito					■		■	■	■		■		■
Structured Stripe				■									
Tilt Shift Redux	■			■	■		■	■	■		■		■
Wool Fleck	■			■	■		■	■	■		■		■
GRADE 8													
Barberpole Basket													
Construct													
Geoglyph													
Full Wool				■									
Herringbone Hybrid	■			■	■		■	■	■		■		■
Homage											■	■	■
Wavefield	■			■	■		■	■	■		■		■
Welded													
Wooly Wooly													
GRADE 9													
Datastorm	■			■	■		■	■	■		■		■
Equilux											■		■
Full Wool											■	■	■
Graph Speck													
Heather Felt											■	■	■
Melange Check													
Super Shearling													
Top Coat													

upholstery fabrics (continued)

WORK CHAIRS & STACKING CHAIRS

Available
Not Available

	WORK CHAIRS								STACKING CHAIRS			
	AROUND	ESSA	NUOVA CONTESSA	PROJEK	SABRINA	SAVERA	TONE	VISIO	NAMI®	NAMI WOOD	VARIABLE	VOLUME
SAMPLE CARDS												
GRADE 1												
Bitstream	★						✖					
Fundamentals							✖					
Heather Tech												
Magnify												
Stimuli	★											
GRADE 2												
Actuate												
Complect												
Complement	★											
Cross Dye	★											
Crossgrain												
Decoy												
Digi Tweed												
Graviton												
Intone	★											
Megacheck												
Percept								*				
Ultra Durable	★											
GRADE 3												
Ample	★											
Doyenne	★											
Ecotone	★											
Fine Grain												
Intraweb	★											
Marl Cloth	★											
Milieu	★											
Situ	★											
Superspun	★											
Texture Map	★											
Twisted Tweed	★											

Continued on the following page.

★ Seat only
✖ Sleeve only
* Only select colors of Percept are available on Visio Chair

upholstery fabrics (continued)

WORK CHAIRS & STACKING CHAIRS (continued)

Available
Not Available

	WORK CHAIRS								STACKING CHAIRS			
	AROUND	ESSA	NUOVA CONTESSA	PROJEK	SABRINA	SAVERA	TONE	VISIO	NAMI®	NAMI WOOD	VARIABLE	VOLUME
SAMPLE CARDS												
GRADE 4												
Demi Boucle	★											
Elastic Wool							✖					
Formwork	★											
Grid State												
High Frequency	★											
Interstice	★											
Lithoprint												
Median												
Meta Texture												
Modulus	★											
Trichroma												
Velvet Underground	★											
GRADE 5												
Adage	★											
Cult Classic												
Monotex	★											
Particulate	★											
Synaptic	★											
GRADE 6												
Amalgam	★											
Duo Chrome	★											
Haptic												
Outpress	★											
Perilune												
Photogram												
Soft Static	★											
Vector												

Continued on the following page.

★ Seat only
✖ Sleeve only

upholstery fabrics (continued)

WORK CHAIRS & STACKING CHAIRS (continued)

Available
Not Available

	WORK CHAIRS								STACKING CHAIRS			
	AROUND	ESSA	NUOVA CONTESSA	PROJEK	SABRINA	SAVERA	TONE	VISIO	NAMI®	NAMI WOOD	VARIABLE	VOLUME
SAMPLE CARDS												
GRADE 7												
Contrast Slub	★						✖					
Ephemera	★											
Everyday Boucle	★											
Flex Wool	★											
Hyped Up	★											
Oeuvre	★											
Pebble Melange	★											
Sgraffito	★											
Structured Stripe	★											
Tilt Shift Redux	★											
Wool Fleck	★											
GRADE 8												
Barberpole Basket	★											
Construct	★						✖					
Full Wool	★						✖					
Geoglyph	★											
Herringbone Hybrid	★											
Homage	★											
Wavefield	★											
Welded												
Wooly Wooly	★											
GRADE 9												
Datastorm												
Equilux	★						✖					
Graph Speck	★											
Heather Felt	★											
Melange Check	★						✖					
Super Shearling	★											
Top Coat	★											

Continued on the following page.

★ Seat only
✖ Sleeve only

upholstery fabrics (continued)

WORK CHAIRS & STACKING CHAIRS (continued)

Available
Not Available

		WORK CHAIRS								STACKING CHAIRS			
		AROUND	ESSA	NUOVA CONTESSA	PROJEK	SABRINA	SAVERA	TONE	VISIO	NAMI®	NAMI WOOD	VARIABLE	VOLUME
SAMPLE CARDS													
GRADE 10													
Color Fuse		★											
Fleece		★						✖					
LEATHER - LA													
Base Grade Leather													
LEATHER - LB													
Merus													
LEATHER - LC													
Pela													
LEATHER - LD													
Fortis													
AROUND MESH													
Banner	A123												
Lapis	A124												
Brier	A125												
Dove	A126												
Black	A127												
NU-TESS MESH													
Iron	SB15												
Basalt	SB16												
Brier	SB19												
Banner	SB20												
Lapis	SB21												
SHRINX FLECK MESH													
Charcoal	F1												
Smoke	F2												
Dune	F3												
Peat	F4												

Continued on the following page.

★ Seat only
✖ Sleeve only

upholstery fabrics (continued)

WORK CHAIRS & STACKING CHAIRS (continued)

Available
Not Available

		WORK CHAIRS								STACKING CHAIRS			
		AROUND	ESSA	NUOVA CONTESSA	PROJEK	SABRINA	SAVERA	TONE	VISIO	NAMI®	NAMI WOOD	VARIABLE	VOLUME
SAMPLE CARDS													
SHRINX ORIGINAL MESH													
Ebony	S2				■								
SHRINX VEIL MESH													
Veil Noir	S4				■								
Veil Blanc	S5				■								
Veil Grau	S6				■								
SABRINA MESH													
Iron	SB15					■							
Basalt	SB16					■							
Chainlink	SB17					■							
Brier	SB19					■							
Banner	SB20					■							
Lapis	SB21					■							
VISIO MESH													
Black	VM01								■				
Grey	VM02								■				
TONE PERFORMANCE MESH													
Pearl	KK01							■					
Pebble	KK02							■					
Charcoal	KK03							■					
Onyx	KK04							■					
Ochre	KK05							■					
Rooibos	KK06							■					
Umber	KK07							■					
Coral	KK08							■					
Eucalyptus	KK09							■					
Indigo	KK10							■					
Seaweed	KK11							■					
Minuit	KK12							■					

Continued on the following page.

upholstery fabrics (continued)

WORK CHAIRS & STACKING CHAIRS (continued)

Available
Not Available

		WORK CHAIRS								STACKING CHAIRS			
		AROUND	ESSA	NUOVA CONTESSA	PROJEK	SABRINA	SAVERA	TONE	VISIO	NAMI®	NAMI WOOD	VARIABLE	VOLUME
SAMPLE CARDS													
TONE LIFESTYLE MESH													
Pearl	WW01							■					
Pebble	WW02							■					
Charcoal	WW03							■					
Onyx	WW04							■					
Ochre	WW05							■					
Rooibos	WW06							■					
Umber	WW07							■					
Coral	WW08							■					
Eucalyptus	WW09							■					
Indigo	WW10							■					
Seaweed	WW11							■					
Minuit	WW12							■					
TONE KNIT SLEEVE													
Pearl	KN22							■					
Pebble	KN23							■					
Charcoal	KN24							■					
Onyx	KN25							■					
Ochre	KN26							■					
Dark Eucalyptus	KN27							■					
Dark Coral	KN28							■					
Dark Indigo	KN29							■					

upholstery fabrics (continued)

MULTI-USE CHAIRS

Available
Not Available

	MULTI -USE																	
												NORTH 56					ROUTES	
	AAREA	ABILITY	AMICUS	AROUND	JUST-US	LORIA	KUPP	OCCO	SITARA	SPROUT	VARIABLE	ARNE	CHEZ	LARU	SCHALE	SICLA	MULTI-USE STOOL	THREE-LEG
SAMPLE CARDS																		
GRADE 1																		
Bitstream				★														
Fundamentals																		
Heather Tech																		
Magnify																		
Stimuli				★														
GRADE 2																		
Actuate																		
Complect																		
Complement				★														
Cross Dye				★														
Crossgrain																		
Decoy																		
Digi Tweed																		
Graviton																		
Intone				★														
Megacheck																		
Percept																		
Ultra Durable				★														
GRADE 3																		
Ample				★														
Doyenne				★														
Ecotone				★														
Fine Grain																		
Intraweb				★														
Marl Cloth				★														
Milieu				★														
Situ				★														
Superspun				★														
Texture Map				★														
Twisted Tweed				★														

Continued on the following page.

upholstery fabrics (continued)

MULTI-USE CHAIRS (continued)

Available
Not Available

	MULTI -USE																	
												NORTH 56					ROUTES	
	AAREA	ABILITY	AMICUS	AROUND	JUST-US	LORIA	KUPP	OCCO	SITARA	SPROUT	VARIABLE	ARNE	CHEZ	LARU	SCHALE	SICLA	MULTI-USE STOOL	THREE-LEG
SAMPLE CARDS																		
GRADE 4																		
Demi Boucle	☐	■	■	★	■	■	■	■	■	■	■	■	■	■	■	■	■	■
Elastic Wool	■	■	■	☐	■	■	■	■	■	☐	■	■	■	■	■	■	■	■
Formwork	■	■	■	★	■	■	■	■	■	■	■	■	■	■	■	■	■	■
Grid State	■	■	■	★	■	■	■	■	■	☐	■	■	☐	■	☐	■	■	■
High Frequency	☐	■	■	★	■	■	■	■	■	■	■	■	■	■	■	■	■	■
Interstice	■	■	■	★	■	■	■	■	■	■	■	■	■	■	■	■	■	■
Lithoprint	■	☐	■	☐	■	■	■	■	■	■	■	■	■	■	■	☐	☐	■
Median	■	■	■	☐	■	■	■	■	■	■	■	■	■	■	■	☐	☐	■
Meta Texture	■	■	■	☐	☐	■	■	■	☐	☐	■	■	■	☐	☐	■	■	■
Modulus	☐	☐	☐	★	☐	☐	☐	☐	☐	■	☐	☐	☐	☐	☐	☐	■	■
Trichroma	■	■	■	☐	■	■	■	■	■	■	■	■	■	■	■	☐	☐	■
Velvet Underground	■	■	■	★	■	■	■	■	■	■	■	■	■	■	■	■	■	■
GRADE 5																		
Adage	■	■	■	★	■	■	■	■	■	■	■	■	■	■	■	■	■	■
Cult Classic	■	■	■	★	■	■	■	■	■	■	■	■	■	■	■	■	■	■
Monotex	■	■	■	☐	■	■	■	■	■	☐	■	■	■	■	■	■	■	■
Particulate	■	■	■	★	■	■	■	■	■	■	■	■	■	■	■	■	■	■
Synaptic	■	■	■	★	■	■	■	■	■	■	■	■	■	■	■	■	■	■
GRADE 6																		
Amalgam	■	☐	☐	★	■	☐	☐	■	■	■	☐	☐	☐	☐	☐	☐	■	■
Duo Chrome	■	■	■	★	■	■	■	■	■	■	■	■	■	■	■	■	■	■
Haptic	■	■	■	★	■	■	■	■	■	■	■	■	■	■	■	■	■	■
Outpress	☐	■	■	★	■	■	■	■	■	■	■	■	■	■	■	■	■	■
Perilune	■	■	■	★	■	■	■	■	■	■	■	■	■	■	■	■	■	■
Photogram	■	■	■	☐	■	■	■	■	■	■	■	■	■	■	■	■	■	■
Soft Static	☐	■	■	★	☐	■	☐	■	☐	■	■	■	☐	■	☐	■	■	■
Vector	☐	■	■	☐	☐	■	■	■	☐	☐	■	■	■	■	■	■	■	■

Continued on the following page.

upholstery fabrics (continued)

MULTI-USE CHAIRS (continued)

Available
Not Available

	MULTI -USE																	
												NORTH 56					ROUTES	
	AAREA	ABILITY	AMICUS	AROUND	JUST-US	LORIA	KUPP	OCCO	SITARA	SPROUT	VARIABLE	ARNE	CHEZ	LARU	SCHALE	SICLA	MULTI-USE STOOL	THREE-LEG
SAMPLE CARDS																		
GRADE 7																		
Contrast Slub	■	■	■	■	■	■	■	■	■	■	■	■	■	■	■	■	■	■
Ephemera	■	■	■	■	■	■	■	■	■	■	■	■	■	■	■	■	■	■
Everyday Boucle	■	■	■	□	■	■	■	■	■	■	■	■	■	■	■	■	■	■
Flex Wool	■	□	□	□	■	□	□	■	□	□	□	□	□	□	□	□	■	■
Hyped Up	□	■	■	■	■	■	■	■	■	■	■	■	■	■	■	■	■	■
Oeuvre	■	■	■	■	■	■	■	■	■	■	■	■	■	■	■	■	■	■
Pebble Melange	■	■	■	■	□	■	□	■	□	□	■	■	□	□	□	■	■	■
Sgraffito	□	■	■	■	■	■	■	■	■	■	■	■	□	■	□	■	■	■
Structured Stripe	□	■	■	■	■	■	■	■	■	■	■	■	■	■	■	■	■	■
Tilt Shift Redux	■	■	■	■	■	■	■	■	■	□	■	■	□	■	□	■	■	■
Wool Fleck	■	■	■	■	■	■	■	■	■	■	■	■	■	■	■	■	■	■
GRADE 8																		
Barberpole Basket	■	■	■	■	■	■	■	■	■	■	■	■	■	■	■	■	■	■
Construct	■	■	■	■	■	■	■	■	■	■	■	■	■	■	■	■	■	■
Full Wool	■	■	■	■	■	■	■	■	■	■	■	■	■	■	■	■	■	■
Geoglyph	■	■	■	■	■	■	□	■	□	■	■	■	■	■	■	■	■	■
Herringbone Hybrid	□	■	■	■	■	■	■	■	■	■	■	■	■	■	■	■	■	■
Homage	■	■	■	■	■	■	■	■	■	■	■	■	■	■	■	■	■	■
Wavefield	■	■	■	■	■	■	■	■	■	■	■	■	■	■	■	■	■	■
Welded	■	■	■	□	■	■	■	■	■	■	■	■	■	■	■	■	■	■
Wooly Wooly	□	■	■	■	■	■	■	■	■	■	■	■	■	■	■	■	■	■
GRADE 9																		
Datastorm	■	□	■	□	■	■	■	■	■	■	■	■	□	■	□	■	■	■
Equilux	□	■	■	■	□	■	■	■	□	■	■	■	■	■	■	■	■	■
Graph Speck	■	■	■	■	■	■	□	■	□	■	■	■	■	■	■	■	■	■
Heather Felt	□	■	■	■	■	■	■	■	■	■	■	■	■	■	■	■	■	■
Melange Check	□	□	□	□	□	□	□	□	□	□	□	□	□	□	□	□	□	□
Super Shearling	□	■	■	■	■	■	■	■	■	■	■	■	■	■	■	■	■	■
Top Coat	■	■	■	■	■	■	■	■	■	□	■	■	■	■	■	■	■	■

Continued on the following page.

upholstery fabrics (continued)

MULTI-USE CHAIRS (continued)

Available
Not Available

		MULTI -USE																	
													NORTH 56					ROUTES	
		AAREA	ABILITY	AMICUS	AROUND	JUST-US	LORIA	KUPP	OCCO	SITARA	SPROUT	VARIABLE	ARNE	CHEZ	LARU	SCHALE	SICLA	MULTI-USE STOOL	THREE-LEG
SAMPLE CARDS																			
GRADE 10																			
Color Fuse		■	■	■	□	■	■	■	■	■	□	■	■	■	■	■	■	■	■
Fleece		■	■	■	■	■	■	■	■	■	■	■	■	■	■	■	■	■	■
LEATHER - LA																			
Base Grade Leather		■	■	■	●	■	□	■	■	■	■	■	■	■	■	■	□	■	■
LEATHER - LB																			
Merus		■	■	■	■	■	□	■	■	■	■	■	■	■	■	■	□	■	■
LEATHER - LC																			
Pela		■	■	■	■	■	□	■	■	■	■	■	■	■	■	■	□	■	■
LEATHER - LD																			
Fortis		■	■	■	■	■	□	□	■	□	■	□	■	■	■	■	□	■	■
AROUND MESH																			
Banner	A123	□	□	□	■	■	□	□	□	□	□	□	□	□	□	□	□	□	□
Lapis	A124	□	□	□	■	■	□	□	□	□	□	□	□	□	□	□	□	□	□
Brier	A125	□	□	□	■	■	□	□	□	□	□	□	□	□	□	□	□	□	□
Dove	A126	□	□	□	■	■	□	□	□	□	□	□	□	□	□	□	□	□	□
Black	A127	□	□	□	■	■	□	□	□	□	□	□	□	□	□	□	□	□	□
JUST-US MESH																			
Black	J100	□	□	□	□	■	□	□	□	□	□	□	□	□	□	□	□	□	□
Charcoal	J101	□	□	□	□	■	□	□	□	□	□	□	□	□	□	□	□	□	□
Smoke	J102	□	□	□	□	■	□	□	□	□	□	□	□	□	□	□	□	□	□
Fleece	J103	□	□	□	□	■	□	□	□	□	□	□	□	□	□	□	□	□	□
Khaki	J104	□	□	□	□	■	□	□	□	□	□	□	□	□	□	□	□	□	□
Spice	J105	□	□	□	□	■	□	□	□	□	□	□	□	□	□	□	□	□	□
Surf	J106	□	□	□	□	■	□	□	□	□	□	□	□	□	□	□	□	□	□

Continued on the following page.

upholstery fabrics (continued)

MULTI-USE CHAIRS (continued)

Available
Not Available

		MULTI -USE																	
													NORTH 56					ROUTES	
		AAREA	ABILITY	AMICUS	AROUND	JUST-US	LORIA	KUPP	OCCO	SITARA	SPROUT	VARIABLE	ARNE	CHEZ	LARU	SCHALE	SICLA	MULTI-USE STOOL	THREE-LEG
SAMPLE CARDS																			
AAREA KNIT																			
Pearl	KN30																		
Pebble	KN31																		
Charcoal	KN32																		
Onyx	KN33																		
Ochre	KN34																		
Maple	KN35																		
Umber	KN36																		
Peat	KN37																		
Pine	KN38																		
Cliffside	KN39																		
Celestial	KN40																		

upholstery fabrics (continued)

SOFT SEATING

Available
Not Available

	SOFT SEATING														
											ROUTES				
	AEGIS	BANQS	BELIZE	BONDS	COLLABORATIVE OTTOMAN	FERRARA	TEKNION DNA	TUX	VASARI	VIGNETTE	ARC	LOUNGE	MEET & GREET	ROCKER	SOFA
GRADE 1															
Bitstream	■	■	■	■	■	■	■	■	■	■	■	■	■	■	■
Fundamentals	■	■	■	■	■	■	■	■	■	■	■	■	■	■	■
Heather Tech	■	■	■	□	■	■	□	■	■	■	■	■	■	■	■
Magnify	■	■	■	■	■	■	■	■	■	■	■	■	■	■	■
Stimuli	■	■	■	■	■	■	■	■	■	■	■	■	■	■	■
GRADE 2															
Actuate	■	■	■	■	■	■	■	■	■	■	■	■	■	■	■
Complect	■	■	□	■	■	■	■	■	□	■	■	■	□	□	■
Complement	■	■	■	■	■	■	■	■	■	■	■	■	■	■	■
Cross Dye	■	■	■	■	■	■	■	■	■	■	■	■	■	■	■
Crossgrain	■	■	■	■	■	■	■	■	■	■	■	■	■	■	■
Decoy	■	■	■	■	■	■	■	■	■	■	■	■	■	■	■
Digi Tweed	■	■	■	■	■	■	■	■	■	■	■	■	■	■	■
Graviton	■	■	■	■	■	■	■	■	■	■	■	■	■	■	■
Intone	■	■	■	■	■	■	■	■	■	■	■	■	■	■	■
Megacheck	■	■	□	■	■	■	■	■	□	■	□	□	□	□	■
Percept	■	■	■	■	■	■	■	■	■	■	■	■	■	■	■
Ultra Durable	■	■	□	■	■	■	■	■	■	■	■	■	■	■	■
GRADE 3															
Ample	■	■	■	■	■	■	■	■	■	■	■	■	■	■	■
Doyenne	■	■	■	■	■	■	■	■	■	■	■	■	■	■	■
Ecotone	■	■	□	■	■	■	■	■	□	■	■	■	■	■	■
Fine Grain	■	■	■	■	■	■	■	■	■	■	■	■	■	■	■
Intraweb	■	■	□	■	■	■	■	■	□	■	■	■	■	□	■
Marl Cloth	■	■	■	■	■	■	■	■	■	■	■	■	■	■	■
Milieu	■	■	■	■	■	■	■	■	■	■	■	■	■	■	■
Situ	■	■	■	■	■	■	■	■	■	■	■	■	■	■	■
Superspun	■	■	■	■	■	■	■	■	■	■	■	■	■	■	■
Texture Map	■	■	■	■	■	■	■	■	■	■	■	■	■	■	■
Twisted Tweed	■	■	■	■	■	■	■	■	■	■	■	■	■	■	■

Continued on the following page.

upholstery fabrics (continued)

SOFT SEATING (continued)

Available
Not Available

	SOFT SEATING														
											ROUTES				
	AEGIS	BANQS	BELIZE	BONDS	COLLABORATIVE OTTOMAN	FERRARA	TEKNION DNA	TUX	VASARI	VIGNETTE	ARC	LOUNGE	MEET & GREET	ROCKER	SOFA
GRADE 4															
Demi Boucle	■	■	■	■	■	■	■	■	■	■	■	■	□	□	■
Elastic Wool	■	■	■	■	■	■	■	■	■	■	■	■	□	□	■
Formwork	■	■	■	■	■	■	■	■	■	■	■	■	□	□	■
Grid State	■	■	□	■	■	■	■	■	□	■	■	■	■	■	■
High Frequency	■	■	■	■	■	■	■	■	■	■	■	■	■	■	■
Interstice	■	■	■	■	■	■	■	■	■	■	■	■	■	■	■
Lithoprint	■	■	■	■	■	■	■	■	■	■	□	□	□	□	□
Median	■	■	■	■	■	■	■	■	■	■	■	■	■	■	■
Meta Texture	■	■	■	■	■	■	■	■	■	■	■	■	■	■	■
Modulus	■	■	□	■	■	■	■	■	■	□	■	■	■	■	■
Trichroma	■	■	■	■	■	■	■	■	■	■	□	□	□	□	■
Velvet Underground	■	■	■	■	■	■	■	■	■	■	■	■	■	■	■
GRADE 5															
Adage	■	■	■	■	■	■	■	■	■	■	■	■	■	■	■
Cult Classic	■	■	■	■	■	■	■	■	■	■	■	■	■	■	■
Monotex	■	■	■	■	■	■	■	■	■	■	■	■	■	■	■
Particulate	■	■	■	■	■	■	■	■	■	■	□	□	□	□	■
Synaptic	■	■	■	■	■	■	■	■	■	■	■	■	■	■	■
GRADE 6															
Amalgam	■	■	■	■	■	■	■	■	■	■	■	■	■	■	■
Duo Chrome	□	□	□	□	□	■	□	□	□	□	■	■	□	□	□
Haptic	■	■	■	■	■	■	■	■	■	■	■	■	■	■	■
Outpress	■	■	■	□	■	■	■	■	■	■	■	■	■	■	■
Perilune	■	■	■	□	■	■	■	■	■	■	■	■	■	■	■
Photogram	■	■	■	■	■	■	■	■	■	■	■	■	■	■	■
Soft Static	■	■	□	■	■	■	■	■	□	■	□	□	■	■	■
Vector	□	□	□	□	□	□	□	□	□	□	■	■	□	□	□

Continued on the following page.

upholstery fabrics (continued)

SOFT SEATING (continued)

Available
Not Available

	SOFT SEATING										ROUTES				
	AEGIS	BANQS	BELIZE	BONDS	COLLABORATIVE OTTOMAN	FERRARA	TEKNION DNA	TUX	VASARI	VIGNETTE	ARC	LOUNGE	MEET & GREET	ROCKER	SOFA
GRADE 7															
Contrast Slub	Available	Available	Available	Available	Available	Available	Available	Available	Available	Available	Available	Available	Available	Available	Available
Ephemera	Available	Available	Available	Available	Available	Available	Available	Available	Available	Available	Available	Available	Available	Available	Available
Everyday Boucle	Available	Available	Available	Available	Available	Available	Available	Available	Available	Available	Available	Available	Available	Available	Available
Flex Wool	Available	Available	Not Available	Available	Available	Not Available	Available	Available	Not Available	Available	Not Available	Not Available	Not Available	Not Available	Available
Hyped Up	Available	Available	Available	Available	Available	Available	Available	Available	Available	Available	Available	Available	Available	Available	Available
Oeuvre	Available	Available	Available	Available	Available	Available	Available	Available	Available	Available	Available	Available	Available	Available	Available
Pebble Melange	Available	Available	Not Available	Available	Available	Available	Available	Available	Not Available	Available	Available	Available	Not Available	Not Available	Available
Sgraffito	Available	Available	Available	Available	Available	Available	Available	Available	Available	Available	Available	Available	Not Available	Not Available	Available
Structured Stripe	Available	Available	Available	Available	Available	Available	Available	Available	Available	Available	Available	Available	Available	Available	Available
Tilt Shift Redux	Available	Available	Available	Available	Available	Available	Available	Available	Available	Available	Available	Available	Available	Available	Available
Wool Fleck	Available	Available	Available	Available	Available	Available	Available	Available	Available	Available	Available	Available	Available	Available	Available
GRADE 8															
Barberpole Basket	Available	Available	Available	Available	Available	Available	Available	Available	Available	Available	Available	Available	Available	Available	Available
Construct	Available	Available	Available	Available	Available	Available	Available	Available	Available	Available	Available	Available	Available	Available	Available
Full Wool	Available	Available	Available	Available	Available	Available	Available	Available	Available	Available	Available	Available	Available	Available	Available
Geoglyph	Available	Available	Available	Available	Available	Available	Available	Available	Available	Available	Available	Available	Available	Available	Available
Herringbone Hybrid	Available	Available	Available	Available	Available	Available	Available	Available	Available	Available	Available	Available	Not Available	Not Available	Available
Homage	Available	Available	Available	Not Available	Available	Available	Available	Available	Available	Available	Available	Available	Available	Available	Available
Wavefield	Available	Available	Available	Available	Available	Available	Available	Available	Available	Available	Available	Available	Available	Available	Available
Welded	Available	Available	Available	Available	Available	Available	Available	Available	Available	Available	Not Available	Not Available	Not Available	Not Available	Available
Wooly Wooly	Available	Available	Available	Available	Available	Available	Available	Available	Available	Available	Available	Available	Available	Available	Available
GRADE 9															
Datastorm	Available	Available	Available	Available	Available	Available	Available	Available	Available	Available	Available	Available	Available	Available	Available
Equilux	Available	Available	Available	Available	Available	Available	Available	Available	Available	Available	Available	Available	Available	Available	Available
Graph Speck	Available	Available	Available	Available	Available	Available	Available	Available	Available	Available	Available	Available	Available	Available	Available
Heather Felt	Available	Available	Available	Available	Available	Available	Available	Available	Available	Available	Available	Available	Available	Not Available	Available
Melange Check	Available	Available	Available	Available	Available	Available	Available	Available	Available	Available	Available	Available	Not Available	Not Available	Available
Super Shearling	Available	Available	Available	Available	Available	Available	Available	Available	Available	Available	Available	Available	Available	Available	Available
Top Coat	Available	Available	Available	Available	Available	Available	Available	Available	Available	Available	Not Available	Not Available	Available	Available	Available

Continued on the following page.

upholstery fabrics (continued)

SOFT SEATING (continued)

Available
Not Available

	SOFT SEATING										ROUTES				
	AEGIS	BANQS	BELIZE	BONDS	COLLABORATIVE OTTOMAN	FERRARA	TEKNION DNA	TUX	VASARI	VIGNETTE	ARC	LOUNGE	MEET & GREET	ROCKER	SOFA
GRADE 10															
Color Fuse	■	■	■	■	■	■	■	■	■	■	■	■	■	■	■
Fleece	■	■	■	■	■	■	■	■	■	■	■	■	■	■	■
GRADE 11															
Rubric		■		■											
GRADE 13															
Emergent				■											
GRADE 14															
Arc Angle		■		■											
Scale Factor		■		■											
GRADE 16															
Mitered		■		■											
Navigate		■		■											
Second Nature		■		■											
LEATHER - LA															
Base Grade Leather	■	■	■		■	■	■	■	■	■					
LEATHER - LB															
Merus	■	■	■		■	■	■	■	■	■	■	■	■	■	■
LEATHER - LC															
Pela	■	■	■		■	■	■	■	■	■	■	■	■	■	■
LEATHER - LD															
Fortis	■	■			■	■	■	■	■	■	■	■	■	■	■
ARC MESH															
Midnight AR01											■				
Peppercorn AR02											■				

upholstery fabrics (continued)

ZONES

Available
Not Available

	SEATING												
	CLUB		MULTI-USE					SOFT					
	CLUB CHAIR	CLUB STOOLS	ARM CHAIRS	BACKLESS STOOLS	BENCHES	SIDE CHAIRS	SIDE STOOLS	CONFERENCE LOUNGE CHAIRS	MODULAR SEATING	SLED LOUNGE CHAIRS	SLED LOUNGE OTTOMANS	SOFA	SOLO LOUNGE CHAIRS
GRADE 1													
Bitstream	■	■	■	■	■	■	■	■	■	■	■	■	■
Fundamentals	■	■	■	■	■	■	■	■	■	■	■	■	■
Heather Tech	■	■	■	■	■	■	■	■	■	■	■	■	■
Magnify	■	■	■	■	■	■	■	■	■	■	■	■	■
Stimuli	■	■	■	■	■	■	■	■	□	■	■	■	■
GRADE 2													
Actuate	■	■	■	■	■	■	■	■	■	■	■	■	■
Complect	■	■	■	■	■	■	■	□	■	□	□	■	□
Complement	■	■	■	■	■	■	■	■	■	■	■	■	■
Cross Dye	■	■	■	■	■	■	■	■	■	■	■	■	■
Crossgrain	■	■	■	■	■	■	■	■	■	■	■	■	■
Decoy	■	■	■	■	■	■	■	■	■	■	■	■	■
Digi Tweed	■	■	■	■	■	■	■	■	■	■	■	■	■
Graviton	■	■	■	■	■	■	■	□	■	□	□	■	□
Intone	■	■	■	■	■	■	■	■	■	■	■	■	■
Megacheck	■	■	■	■	■	■	■	□	■	□	□	□	□
Percept	■	■	■	■	■	■	■	■	■	■	■	■	■
Ultra Durable	■	■	■	■	■	■	■	■	■	■	■	■	■
GRADE 3													
Ample	■	■	■	■	■	■	■	■	■	■	■	■	■
Doyenne	■	■	■	■	■	■	■	■	■	■	■	■	■
Ecotone	■	■	■	■	■	■	■	■	■	■	■	■	□
Fine Grain	■	■	■	■	■	■	■	■	■	■	■	■	■
Intraweb	■	■	■	■	■	■	■	□	■	□	□	■	□
Marl Cloth	□	□	■	■	■	■	■	■	■	■	■	■	■
Milieu	■	■	■	■	■	■	■	■	■	■	■	■	■
Situ	■	■	■	■	■	■	■	■	■	■	■	■	■
Superspun	■	■	■	■	■	■	■	■	■	■	■	■	■
Textured Map	■	■	■	■	■	■	■	■	■	■	■	■	■
Twisted Tweed	■	■	■	■	■	■	■	■	■	■	■	■	■

Continued on the following page.

upholstery fabrics (continued)

ZONES (continued)

Available
Not Available

	SEATING												
	CLUB		MULTI-USE					SOFT					
	CLUB CHAIR	CLUB STOOLS	ARM CHAIRS	BACKLESS STOOLS	BENCHES	SIDE CHAIRS	SIDE STOOLS	CONFERENCE LOUNGE CHAIRS	MODULAR SEATING	SLED LOUNGE CHAIRS	SLED LOUNGE OTTOMANS	SOFA	SOLO LOUNGE CHAIRS
GRADE 4													
Demi Boucle	Available	Available	Available	Available	Available	Available	Available	Not Available	Available	Not Available	Not Available	Available	Available
Elastic Wool	Available	Available	Available	Available	Available	Available	Available	Available	Available	Available	Available	Available	Available
Formwork	Available	Available	Available	Available	Available	Available	Available	Not Available	Available	Not Available	Not Available	Available	Not Available
Grid State	Not Available	Not Available	Available	Available	Available	Available	Available	Available	Available	Available	Available	Available	Available
High Frequency	Available	Available	Available	Available	Available	Available	Available	Available	Available	Available	Available	Available	Available
Interstice	Available	Available	Available	Available	Available	Available	Available	Available	Available	Available	Available	Available	Available
Lithoprint	Available	Available	Available	Available	Available	Available	Available	Available	Available	Available	Available	Not Available	Not Available
Median	Available	Available	Available	Available	Available	Available	Available	Available	Available	Available	Available	Available	Available
Meta Texture	Available	Available	Available	Available	Available	Available	Available	Available	Available	Available	Available	Available	Available
Modulus	Available	Available	Available	Available	Available	Available	Available	Available	Not Available	Available	Available	Available	Available
Trichroma	Available	Available	Available	Available	Available	Available	Available	Available	Available	Available	Available	Not Available	Not Available
Velvet Underground	Not Available	Not Available	Available	Available	Available	Available	Available	Available	Available	Available	Not Available	Available	Available
GRADE 5													
Adage	Available	Available	Available	Available	Available	Available	Available	Available	Available	Available	Available	Available	Available
Cult Classic	Available	Available	Available	Available	Available	Available	Available	Available	Available	Available	Available	Available	Available
Monotex	Available	Available	Available	Available	Available	Available	Available	Not Available	Available	Not Available	Not Available	Available	Not Available
Particulate	Available	Available	Available	Available	Available	Available	Available	Not Available	Available	Not Available	Not Available	Not Available	Not Available
Synaptic	Available	Available	Available	Available	Available	Available	Available	Available	Available	Available	Available	Available	Available
GRADE 6													
Amalgam	Available	Available	Available	Available	Available	Available	Available	Available	Available	Available	Available	Available	Available
Duo Chrome	Available	Available	Available	Available	Available	Available	Available	Not Available	Available	Not Available	Not Available	Available	Not Available
Haptic	Available	Available	Available	Available	Available	Available	Available	Available	Available	Available	Available	Available	Available
Outpress	Available	Available	Available	Available	Available	Available	Available	Available	Not Available	Available	Available	Available	Available
Perilune	Available	Available	Available	Available	Available	Available	Available	Not Available	Not Available	Not Available	Not Available	Available	Not Available
Photogram	Available	Available	Available	Available	Available	Available	Available	Available	Available	Available	Available	Available	Available
Soft Static	Not Available	Not Available	Available	Available	Available	Available	Available	Available	Not Available	Available	Available	Not Available	Available
Vector	Not Available	Not Available	Available	Available	Available	Available	Available	Not Available	Not Available	Not Available	Not Available	Available	Not Available

Continued on the following page.

upholstery fabrics (continued)

ZONES (continued)

Available
Not Available

	SEATING												
	CLUB		MULTI-USE					SOFT					
	CLUB CHAIR	CLUB STOOLS	ARM CHAIRS	BACKLESS STOOLS	BENCHES	SIDE CHAIRS	SIDE STOOLS	CONFERENCE LOUNGE CHAIRS	MODULAR SEATING	SLED LOUNGE CHAIRS	SLED LOUNGE OTTOMANS	SOFA	SOLO LOUNGE CHAIRS
GRADE 7													
Contrast Slub	■	■	■	■	■	■	■	■	■	■	■	■	■
Ephemera	■	■	■	■	■	■	■	■	■	■	■	■	■
Everyday Boucle	■	■	■	■	■	■	■	■	■	■	■	■	■
Flex Wool	■	■	■	■	■	■	■					■	
Hyped Up	■	■	■	■	■	■	■	■	■	■	■	■	■
Oeuvre	■	■	■	■	■	■	■	■	■	■	■	■	■
Pebble Melange												■	
Sgraffito			■	■	■	■	■		■			■	
Structured Stripe	■	■	■	■	■	■	■	■		■	■	■	■
Tilt Shift Redux								■	■	■	■	■	■
Wool Fleck	■	■	■	■	■	■	■	■	■	■	■	■	■
GRADE 8													
Barberpole Basket	■	■	■	■	■	■	■	■	■	■	■	■	■
Construct	■	■	■	■	■	■	■	■	■	■	■	■	■
Full Wool	■	■	■	■	■	■	■	■	■	■	■	■	■
Geoglyph	■	■	■	■	■	■	■	■	■	■	■	■	■
Herringbone Hybrid	■	■	■	■	■	■	■		■			■	
Wavefield	■	■	■	■	■	■	■	■	■	■	■	■	■
Welded	■	■	■	■	■	■	■		■				
Wooly Wooly	■	■	■	■	■	■	■	■	■	■	■	■	■
GRADE 9													
Datastorm		■	■	■	■	■	■	■	■		■	■	■
Equilux	■	■	■	■	■	■	■	■		■	■	■	■
Graph Speck	■	■	■	■	■	■	■	■	■	■	■	■	■
Heather Felt	■	■	■	■	■	■	■	■	■	■	■	■	■
Melange Check	■	■	■	■	■	■	■					■	
Super Shearling	■	■	■	■	■	■	■	■	■	■	■	■	■
Top Coat	■	■	■	■	■	■	■		■			■	

Continued on the following page.

upholstery fabrics (continued)

ZONES (continued)

Available
Not Available

	SEATING												
	CLUB		MULTI-USE					SOFT					
	CLUB CHAIR	CLUB STOOLS	ARM CHAIRS	BACKLESS STOOLS	BENCHES	SIDE CHAIRS	SIDE STOOLS	CONFERENCE LOUNGE CHAIRS	MODULAR SEATING	SLED LOUNGE CHAIRS	SLED LOUNGE OTTOMANS	SOFA	SOLO LOUNGE CHAIRS
GRADE 10													
Color Fuse	Available	Available	Available	Available	Available	Available	Available	Available	Available	Available	Available	Available	Available
Fleece	Available	Available	Available	Available	Available	Available	Available	Available	Not Available	Available	Available	Available	Available
GRADE 11													
Rubric	Available	Available	Available	Available	Available	Available	Available	Available	Not Available	Available	Available	Available	Available
GRADE 13													
Emergent	Available	Available	Available	Available	Available	Available	Available	Available	Not Available	Available	Available	Available	Available
GRADE 14													
Arc Angle	Available	Available	Available	Available	Available	Available	Available	Available	Not Available	Available	Available	Available	Available
Scale Factor	Available	Available	Available	Available	Available	Available	Available	Available	Not Available	Available	Available	Available	Available
GRADE 16													
Mitered	Not Available	Not Available	Not Available	Not Available	Not Available	Not Available	Not Available	Not Available	Not Available	Not Available	Not Available	Available	Not Available
Navigate	Available	Available	Available	Available	Available	Available	Available	Available	Not Available	Available	Available	Available	Available
Second Nature	Available	Available	Available	Available	Available	Available	Available	Available	Not Available	Available	Available	Available	Available
LEATHER - LA													
Base Grade Leather	Not Available	Not Available	Available	Available	Available	Available	Available	Available	Not Available	Available	Available	Available	Available
LEATHER - LB													
Merus	Not Available	Not Available	Available	Available	Available	Available	Available	Available	Not Available	Available	Available	Available	Available
LEATHER - LC													
Pela	Not Available	Not Available	Available	Available	Available	Available	Available	Available	Not Available	Available	Available	Available	Available
LEATHER - LD													
Fortis	Not Available	Not Available	Available	Available	Available	Available	Available	Available	Not Available	Available	Available	Available	Available

listing matrices

UPHOLSTERY FABRICS

GRADE 1

Bitstream

- Tablet B160
- Hardware B161
- Trackback B162
- Lithium B163
- Grey code B164
- Silicone B165
- White Noise B166
- Xenon B167
- Wavelet B168
- Blue Team B169
- Firewire B170
- Flash Drive B171

Fundamentals

- Salsa E504
- Banner E505
- Parakeet E516
- Brier E518
- Sudan E519
- Wendigo E520
- Armory E521
- Light Grey E522
- Black E523
- Tangelo E526
- Verde E528
- Aqua E529
- Azure E530
- Dove E532
- Nickel E533
- Slate E534
- Latte E535
- Marble E536
- Moonstone E537
- Lapris E538
- Malachite E539

Heather Tech

- Dust Tech T162
- Topaz Tech T163
- Oat Tech T164
- Flax Tech T165
- Silt Tech T166
- Loam Tech T167
- Crag Tech T168
- Basalt Tech T169
- Loden Tech T170
- Sagebrush Tech T171
- Meadow Tech T172
- Sundew Tech T173
- Rose Tech T174
- Raspite Tech T175
- Madder Tech T176
- Beetroot Tech T177
- Thistle Tech T178
- Lav Tech T179
- Clear Tech T180

GRADE 1 (Continued)

Heather Tech (Continued)

- Loch Tech T181
- Ocean Tech T182
- North Sea Tech T183
- Onyx Tech T184
- Obsidian Tech T185

Magnify

- Telescope M140
- Polished Mirror M141
- Reflection M142
- Zoom Lens M143
- Force Field M144
- Long Wave M145
- Deep Water M146
- Light Beam M147
- Flare Up M148
- Viewfinder M149
- Infrared M151

Stimuli

- Sensitive S145
- Turbinado S146
- Rush S147
- Zest S148
- Tactile S149
- Daredevil S150
- Euphoria S151
- Vigor S152
- Thrill S153
- Catalyst S154
- Black Tea S155

GRADE 2

Actuate

- Aqueous A209
- Spectral A210
- Aether A211
- Facet A212
- Syntax A213
- Vanish A214
- Suffuse A215
- Mordant A216
- Lambent A217
- Conscious A218
- Fortify A219
- Favrile A220
- Prelude A221
- Meridian A222
- Thermal A223
- Induction A224

GRADE 2 (Continued)

Complect

- Melanite C293
- Quarry C294
- Silverleaf C295
- Jute C296
- Cumulus C297
- Yolk C298
- Apricot C299
- Highlighter Pink C300
- Deep Crimson C301
- Autumn C302
- Opaline C303
- Reservoir C304
- Gentian C305
- Blue Ice C306
- Winter C307
- Boreal C308
- Turquoise C309
- Okra C310
- Agave C311

Complement

- Nightfall T148
- Dusk T149
- Grey Wolf T150
- Sea Salt T151
- Roan T152
- Amarillo T153
- Arancia T154
- Carnelian T155
- Garnet T156
- Fresh Air T158
- Peacock T159

Cross Dye

- Earl Grey C120
- Linen C121
- Light Birch C122
- Almond C123
- Soft Shadow C124
- Ace Grey C125
- Cool Ash C126
- Carotene C127
- Crimson C128
- Carmine C129
- Tea Tree C130
- Artichoke C131
- Plum C132
- Watercolor C133
- Azure C134
- Logwood C135

listing matrices

UPHOLSTERY FABRICS

GRADE 2 (Continued)

Crossgrain

- Underbrush C163
- Dado C164
- Blackwood C165
- Cove C166
- Xylem C167
- Tenon C168
- Amaranth C169
- Red Oak C170
- Tuliptree C171
- Iroko C172
- Ginkgo C173
- Burl C174
- Cypress C175
- Springwood C176
- Driftwood C177

Decoy

- Double Bluff D150
- Sheep's Clothing D151
- Trick Mirror D152
- Ditto D153
- Proxy D154
- Façade D155
- Rook D156
- Copycat D157
- Incognito D158
- Pipe Dream D159
- Trip Wire D160
- Feign D161
- Atlantis D162
- Mirage D163
- Reverie D164
- Lure D165
- Cloak D166
- Mystify D167
- Figment D168
- Ruse D169
- Red Handed D170
- Clandestine D171
- Cahoots D172
- Synonym D173
- Mimic D174
- Retort D175
- Masquerade D176
- Lookalike D177
- Eavesdrop D178
- Lark D179
- Stand In D180
- Encore D181
- Sweet Talk D182
- Pretense D183
- Fool's Gold D184

GRADE 2 (Continued)

Decoy (Continued)

- Monkey Business D185
- Alias D186
- Crocodile Tears D187
- Parrot D188
- Face Value D189
- Garden Path D190
- Espionage D191
- Emulate D192
- Replay D193
- Parallel D194
- Mare's Nest D195

Digi Tweed

- Dust Tweed D310
- Topaz Tweed D311
- Oat Tweed D312
- Flax Tweed D313
- Silt Tweed D314
- Loam Tweed D315
- Crag Tweed D316
- Basalt Tweed D317
- Loden Tweed D318
- Sagebrush Tweed D319
- Meadow Tweed D320
- Sundew Tweed D321
- Rose Tweed D322
- Raspite Tweed D323
- Madder Tweed D324
- Beetroot Tweed D325
- Thistle Tweed D326
- Lav Tweed D327
- Clear Tweed D328
- Loch Tweed D329
- Ocean Tweed D330
- North Sea Tweed D331
- Onyx Tweed D332
- Obsidian Tweed D333

Graviton

- Dark Matter G222
- Chain Reaction G223
- Echo G224
- Cloud Chamber G225
- Albedo G226
- Half Life G227
- Luminous Flux G228
- Fission G229
- Kelvin G230
- Boiling Point G231
- Quantum G232
- Condensation G233
- Centigrade G234
- Ampere G235
- Cold Fusion G236
- Hydrostatic G237

GRADE 2 (Continued)

Intone

- Ash LM12
- Creme LM13
- Harbor LM14
- Quicksilver LM15
- Caraway LM16
- Oxide LM17
- Cinder LM18
- Lute LM19
- Pome LM20
- Eclipse LM21

Megacheck

- Liminal M328
- Convex M329
- Concave M330
- Drop Shadow M331
- Litmus M332
- Gradient M333
- Distort M334
- Resolution M335
- Glitch M336
- Flashbulb M337
- Visage M338
- Magnitude M339

Percept

- Schema P106
- Pristine P107
- Intrinsic P108
- Sublime P110
- Context P111
- Essence P112
- Tenet P113
- Epiphany P114
- Verve P115
- Amplitude P116
- Reason P117
- Cardinality P118
- Nebula P119
- Jubilant P120
- Ignite P121
- Harmonic P122
- Peak P123
- Devotion P124
- Transmit P125
- Render P126
- Pulse P127
- Constant P128
- Radiant P129
- Propagate P130
- Placid P131
- Singular P132
- Fringe P133

listing matrices

UPHOLSTERY FABRICS

GRADE 2 (Continued)

Ultra Durable

- Mohair V180
- Iced Coffee V182
- Tungsten V184
- Black Velvet V187
- Wet Clay V490
- Silver Age V493
- Morning Glory V497
- Neptune V500
- Fig V503

GRADE 3

Ample

- Quark T220
- Voltage T221
- Sunburst T222
- Radioactive T224
- Reaction T227
- Cosmic T229
- Blue Comet T239
- Vortex T241
- Neutron T242
- Tempered T243
- Charge T270
- Equilibrium T271
- Magnetic Field T272
- Convection T273
- Radar T274
- Conductor T275
- Evaporate T276
- Halide T277

Doyenne

- Woodblock Y100
- Sepia Tone Y101
- Intaglio Y102
- Grisailles Y103
- Aquamedia Y104
- Watermark Y105
- Verdigris Y106
- Phthalo Y107
- Terre Verte Y108
- Copperplate Y109
- Sienna Y110
- Alizarin Y111

Ecotone

- Abyss E136
- Ravine E137
- Rocky Shore E138
- Permafrost E139
- Tundra E140
- Arid E141
- Savanna E142
- Desert Bloom E143
- Badlands E144
- Caldera E145
- Freshwater E146
- Intertidal E147
- Rain Shadow E148
- Lichen E149
- Mangrove E150
- Treeline E151

GRADE 3 (Continued)

Fine Grain

- Warm Earth F401
- River One F402
- Saw Dust F403
- Putty Paste F404
- White Out F405
- Lunar Regolith F406
- Metallic Swarf F407
- Volcanic Ash F408
- Carbon Neutral F409
- Frosted Zephyr F410
- Deep Indigo F411
- Fathom Blue F412
- Sea Weed F413
- Matcha Leaves F414
- French Beige F415
- Ginger Snap F416
- Martian Soil F417
- Madder Root F418
- Garnet Sand F419
- Iron Oxide F420
- Peat Moss F421

Intraweb

- Raster T397
- Dual Trace T398
- Polytope T397
- Superposition T400
- Coaxial T401
- Origin T402
- Slope T403
- Polarity T404
- Isosurface T405

Marl Cloth

- Yurt F314
- Dry Stone F318
- Blacksmith F321
- Sea Nomad F322
- Wild Fruit F323
- Dreamscape F324
- Landmark F325
- Tree Bark F326

Milieu

- Kettle M570
- Thunder M571
- Memory M572
- Steam M573
- Wing M574
- Nest M575
- Leap M576
- Troupe M577
- Peregrine M578
- Hedge M579
- Prickle M580
- Spring M581
- Muster M582
- Herd M583
- Parcel M584
- Bloom M585
- Fling M586

GRADE 3 (Continued)

Milieu (Continued)

- Flamboyance M587
- Bazaar M588
- Rabble M589
- Zeal M590
- Bevy M591
- Loft M592
- Float M593
- Paddling M594
- Shoal M595
- Fleet M596

Situ

- Archeology F115
- Pozzolana F116
- Amphora F117
- Statue F118
- Wind Tower F119
- Tunnel F120
- Phosphor F121
- Flamante F122
- Hydro F123
- Terrena F125
- Mar F126

Superspun

- Drawdown S442
- Denier S443
- Tensile S444
- Roving S445
- Staple S446
- Spindle S447
- Harness S448
- Tenter S449
- Red Cast S450
- Selvedge S451
- Skein S452
- Bluing S453
- Treadle S454
- Sett S455
- Pirn S456
- Creel S457

Texture Map

- Mineralize T541
- Henge T542
- Rockfall T543
- Trace Fossil T544
- Windblown Silt T545
- Holocene T546
- Coralline T547
- Latent Heat T548
- Water Table T549
- Elm Pollen T550
- Miocene T551
- Linden T552
- Green Algae T553
- Thaw T554
- Continental Drift T555
- Ocean Basin T556

listing matrices

UPHOLSTERY FABRICS

GRADE 3 (Continued)

Twisted Tweed

- Wrought Iron T278
- Rock Garden T279
- Shady Patch T280
- Moongate T281
- Plaster T282
- Stucco T283
- Thatch T284
- Arbor T285
- Daylight T286
- Sundial T287
- Koi Pond T288
- Brickwork T289
- Annual T290
- Perennial T291
- Rain Chain T292
- Open Air T293
- Water Feature T294
- Terrace T295
- Veranda T296

GRADE 4

Demi Boucle

- Caviar D433
- Chia D434
- Wishbone D435
- Epsom D436
- Talc D437
- Igneous D438
- Cloudberry D439
- Downpour D440
- Crocus D441
- Keemun D442
- Desert Peach D443
- Moss-Rose D444
- Spun Sugar D445
- Sanddollar D446
- Chamomile D447
- Sea Glass D448
- Scarab D449
- Nori D450

Elastic Wool

- Fortress E120
- Fantom E121
- Mercury E122
- Clean E123
- Seed E124
- Tea E125
- Rust E126
- Ruby E127
- Ceylon E128
- Lovelace E129
- Jovial E130
- Elm E131
- Python E132
- Aegean E133
- Delphi E134
- Dart E135

GRADE 4 (Continued)

Formwork

- Metallurgy F136
- Lead F137
- Selenite F138
- Opal F139
- Pearl Ash F140
- Candela F141
- Kiln F142
- Distill F143
- Azurite F144
- Verditer F145
- Elixir F146
- Precipitant F147

Grid State

- Arc Flash G132
- Open Circuit G133
- Volt Switch G134
- Hydropower G135
- Switchboard G136
- Megawatt G137
- Circuit Break G138
- Electrode G139
- Live Wire G140
- Trubine G141
- Neon Bulb G142
- Wolfram G143

High Frequency

- Eclipse Shadow H713
- Flash Lag H714
- Motion Blur H715
- Moon Illusion H716
- Solar Halo H717
- Laser Speckle H718
- Photon Shot H719
- Sea Fret H720
- Fata Morgana H721
- Hyperbolic Green H722
- Iceblink H723
- Plane Wave H724
- Liquid Crystal H725
- Aftereffect H726
- Gaussian H727
- Occlusion H728

Interstice

- Inkling R307
- Lacuna R309
- Whit R310
- Scintilla R311
- Fragment R312
- Atom R313
- Trace R314
- Respite R315
- Vestige R316
- Interval R317
- Caesura R318

GRADE 4 (Continued)

Lithoprint

- Zinc L380
- Cloudy Crystal L381
- Weathered Stone L382
- Space Rock L383
- Chocolate Opal L384
- Tiger's Eye L385
- Pampel L386
- Citrine L387
- Jadeite L388
- Sea Pearl L389
- Marquise L390
- Nephrite L391

Median

- Bracken M237
- Cinquefoil M238
- Metallic Salt M239
- Downy Phlox M240
- Condensata M241
- Calcofluor M242
- Alder Cone M243
- Birch Leaf M244
- Leblanc M245
- Jaune M246
- Grana M247
- Comandra M248
- Mignonette M249
- Rubia M250
- Murex M251
- Phoenician M252
- Isatia M253
- Tinctoria M254
- Prairie Bluet M255
- Popinjay M256
- Herbal M257
- Verdulet M258

Meta Texture

- Deep Space M224
- Grey Matter M225
- Pale Shadow M226
- Silver Lining M227
- Hive Mind M228
- Neutral Ground M229
- Grassroots M230
- Jaded M231
- Deep Dive M232
- Blue Skies M233
- Rosy Outlook M234
- Heat Wave M235
- Punchline M236

listing matrices

UPHOLSTERY FABRICS

GRADE 4 (Continued)

Modulus

- Plinth M172
- Landscape M173
- Masonry M174
- Superstructer M175
- Skylight M176
- Site M177
- Form M178
- Shadow Play M179
- Rebar M180
- Spatial M181
- Threshold M182
- Monument M183

Trichroma

- Siphon T319
- Wash T320
- Whistle T321
- Frolic T322
- Sashay T323
- Roam T324
- Amble T325
- Somersault T326
- Leapfrog T327
- Cultivate T328
- Splash T329
- Drizzle T330
- Plunge T331
- Barge T332
- Vault T333

Velvet Underground

- Metal Machine V310
- Flame Desire V313
- Blue Denim V315
- Dark Moon V317
- Blacktop V318
- Brass Section V319
- Shock Wave V320
- Full Phase V321
- Dark Current V322
- Smoke Screen V323
- Wallflower V324
- Ultraviolet V325
- Purple Rain V326
- Green Room V327
- Garden Level V328
- New Wave V329

GRADE 5

Adage

- Script A166
- Anthracite A146
- Carbon Fiber A147
- Splice A148
- Chromite A149
- Singularity A150
- Valence A151
- Halite A152
- Quartzite A153
- Rubelite A154
- Thremite A155
- Orchil A156
- Holograph A157
- Photon A158
- Halogen A159
- Canopy A160
- Raw Jade A161
- Petrol A162
- Diffraction A163
- Amythyst A164
- Pascal A165

Cult Classic

- Blue Velvet C246
- Black Lagoon C247
- Metropolis C248
- Grey Gardens C249
- White Heat C250
- Ziggy Stardust C251
- Pink Flamingos C252
- Purple Noon C253
- Blue Sunshine C254
- Xanadu C255
- Emerald City C256
- Forrest Gump C257

Monotex

- Silver Lane G106
- Sharkskin G107
- Grey Flannel G108
- Grey Marl G109
- Tarpaper G110
- Ferrous G111
- Bark Cloth G112
- Burlap G113
- Sumac G114
- Redroot G115
- Tyrian G116
- Annatto G117
- Jean G118
- Kingfisher G119
- Oxalis G120
- Sulfur G121

GRADE 5 (Continued)

Particulate

- Molecule P212
- Light Speed P213
- Granule P214
- Allotrope P215
- Current P216
- Corrosion P217
- Inertia P218
- Swell P219
- Oxidation P220
- Proton P221
- Irrigation P222
- Isotope P223
- Electrostatic P224
- Quasar P225
- Smolder P226

Synaptic

- Contact S135
- Phase S136
- Conduit S138
- Sensory S139
- Receptor S140
- Traverse S141
- Transmission S142
- Axon S144

GRADE 6

Amalgam

- Aura K106
- Pyrite K107
- Medallion K108
- Fluid K109
- Ultraviolet K110
- Jolt K111
- Nitro K112
- Magma K113
- Fuse K114

Haptic

- Cliffline H616
- Gravel H617
- Alluvium H618
- Sediment H619
- Pink Salt H620
- Montane H621
- Butte H622
- Arroyo H623
- Superbloom H624
- Mantle H625
- Geode H626
- Flood Plain H627
- Isthmus H628
- Aquifer H629
- Delta H630
- Fjord H631

listing matrices

UPHOLSTERY FABRICS

GRADE 6 (Continued)

Outpress
- Ashen C237
- Sand C238
- Stone C239
- Soot C240
- Raven C241
- Pepper C242
- Monarch C243
- Caribbean C244
- Denim C245

Perilune
- Terrene M160
- Asteroid M161
- Stellar M162
- Satellite M163
- Gravity M164
- Red Shift M165
- Blue Moon M166
- Space Age M167
- Verdant M168
- Pulsar M169
- Solar M170
- Hot Crater M171

Photogram
- Mitere P160
- Toner P161
- Silver Salts P162
- Light Meter P163
- Sunprint P164
- Heliograph P165
- Safelight P166
- Cyanotype P167
- Mezzotint P168
- Darkroom P169

Soft Static
- Semitone S432
- Desert Wind S433
- Whirr S434
- Carillon S435
- Heartbeats S436
- Timbre S437
- Arpeggio S438
- Waterfall S439
- Ambient Nature S440

Vector
- Dovetail V221
- Horizon Line V222
- Tessera V223
- Latitude V224
- Vertex V225
- Radial V226
- Hypercube V227
- Scalar V228
- Parallax V229

GRADE 7

Contrast Slub
- Charred Seed F428
- Silver Thyme F429
- Cotton Blossom F430
- Tumbleweed F431
- Bramble F432
- Manzanita F433
- Cactus Flower F434
- Scarlet Sage F435
- Anemone F436
- Crepe Myrtle F437
- Wild Indigo F438
- Jacaranda F439
- Cenote F440
- Oleander F441
- Eucalyptus F442
- Lemongrass F443

Ephemera
- Lucent E108
- Afterglow E109
- Ice Cloud E110
- Halcyon E111
- Phosphene E112
- Solar Flare E113
- Gamma Burst E114
- Green Flash E115
- Blue Shift E116
- Ashfall E117
- Nightglow E118
- Penumbra E119

Everyday Boucle
- Black Lily E216
- Stonecrop E217
- Smokebush E218
- Silver Aster E219
- Artemisia E220
- Lamb's Ear E221
- Cassava E222
- Tussock E223
- Thicket E224
- Moss E225
- Wintergreen E226
- Bay Laurel E227
- Delphinium E228
- Night Bloom E229
- Blue Phlox E230
- Larkspur E231
- Yarrow E232
- Honeysuckle E233
- Spicebush E234
- Rockrose E235
- Firethorn E236
- Purple Basil E237

GRADE 7 (Continued)

Flex Wool
- Rebound F480
- Tempo F481
- Dynamo F482
- Vim F483
- Spark F484
- Thrive F485
- Arena F486
- Agile F487
- Buoyant F488
- Torque F489
- Raceway F490
- Blur F491

Hyped Up
- Jete H489
- Hubbub H490
- Hot Shot H491
- Fresh H492
- Dandy H493
- Pep H494
- Piqued H495
- Splash H496
- Spruced Up H497

Oeuvre
- Blithe V520
- Salient V521
- Austere V522
- Earnest V523
- Ardent V524
- Fervor V525
- Finesse V526
- Mettle V527
- Flourish V528
- Charm V529
- Deft V530
- Crest V531

Pebble Melange
- Esker P186
- Earthen P187
- Pewter P188
- Tectonic P189
- Geyser P190
- Palustrine P191
- Forest Marble P192
- Everglade P193
- Estuary P194
- Meteor P195
- Barkhan P196
- Lava P197

Sgraffito
- Ironstone S376
- Ceramic Flux S377
- Wax Resist S378
- Salt Glaze S379
- Pink Clay S380
- Acid Etch S381
- Aventurine S382
- Cold Cast S383
- Cobalt Oxide S384

listing matrices

UPHOLSTERY FABRICS

GRADE 7 (Continued)

Structured Stripe
- Shadow Weave S335
- Silver Lap S336
- Countermarche. S337
- Double Beam S338
- Block Draw S339
- Box Motion S340
- Overshot. S341
- Punch Card S342

Tilt Shift Redux
- Elevation T440
- Plexus T441
- Baseline T442
- Beta T443
- Fluctuate. T444
- Alpha T445
- Amplifier T446
- Sensor. T447
- Bandwidth T448
- Synapse. T449
- Sonar T450
- Modulate T451

Wool Fleck
- Boulder. W128
- Packstone W129
- Zinc W130
- Micrite W131
- Coquina W132
- Beachrock. W133
- Tawny W134
- Corten W135
- Pink Nacre W136
- Birchbark W137
- Firesand W138
- Chamotte W139
- Blackberry. W140
- Mussel Dust W141
- Gitti W142
- Iolite. W143
- Storm Petrel W144
- Bittercress W145
- Oat Grass W146
- Aloe W147
- Wild Mustard. W148

GRADE 8

Barberpole Basket
- Licorice Root B388
- Maelstrom B389
- Double Helix B390
- Wisp. B391
- Mycelium B392
- Braided Rope B393
- Uzumaki. B394
- Copper Coil B395
- Cherry Twist B396
- Tendril B397
- Meander. B398
- Tempest B399

GRADE 8 (Continued)

Construct
- Fawn. C511
- Clay C512
- Brandy C513
- Vermilion C514
- Cadmium Orange. C515
- Zinnia. C516
- Auburn C517
- Wisteria C518
- Ultramarine C519
- Cornflower C520
- Pacific. C521
- Celadon C522
- Canary C523
- Turmeric C524
- Ochre C525
- Beryl. C526
- Viridian C527
- Fir. C528
- Midnight C529
- Argent. C530
- Gunmetal C531
- Noir C532

Full Wool
- Blanc F207
- Hot Stone. F209
- Éclair F210
- Macchiato. F211
- Ink F212
- Tigerlily F214
- Fresh Water F215
- Serpent F216
- Neptune F218
- Safari F219
- Vintage Red F220
- Lagoon F221
- Oak Room F222
- Deep Orchid. F223
- Aries. F224
- Seashell F225
- Star Fruit F226
- Clover. F227
- Ocean Shadow F228
- Deep Sea F229
- Sea Holly F230
- London Fog. F231

Geoglyph
- Drifting Sediment. G270
- Polar Lights G271
- Moonlit Mountain G272
- Organic Compound G273
- Dappled Sunlight G274
- Painted Desert G275

GRADE 8 (Continued)

Herringbone Hybrid
- Circadian Rhythm H154
- Rock Cycle H155
- Air Current. H156
- Ice Age H157
- Metamorphosis. H158
- Oscillate H159
- Convergent. H160
- Phoenix Rising H161
- Primary Growth H162
- Flow State. H163
- High Tide. H164

Homage
- Respect H100
- Winsome H101
- Esteem H102
- Dashing H103
- Authority H104
- Soigné. H106
- Valor H107
- Sanguine. H108
- Vivant. H109
- Guild H110
- Pinnacle H111
- Noble H112

Wavefield
- Tideline W480
- Groundwater W481
- Red Tide. W482
- Aspen Reflection. W483
- Rivulet W484
- Cascade. W485
- Sea Level. W486
- Brackish W487
- Wake Zone. W488

Welded
- Alliance. W209
- Charcoal Flux W210
- Bond. W211
- Soda Ash. W212
- Palladium W213
- Brass Alloy W214
- Rose Torch W215
- Copper Foil W216
- Mingle W217
- Synergy. W218
- Synthesis. W219

Wooly Wooly
- Whisper W422
- Hush W423
- Lull. W424
- Cozy W425
- Toasty. W426
- Snug W427
- Nestle W428
- Tenderheart W429
- Still. W430
- Tranquil W431

listing matrices

UPHOLSTERY FABRICS

GRADE 9

Datastorm

- Cloudburst D196
- Silo D197
- Hot Wire D198
- Qubit D199
- Zap D200
- Airdrop D201
- Streaming D202
- Recall D203
- Shadow Noise D204

Equilux

- Eventide E100
- Diamond Dust E101
- Solstice E102
- Moonbow E103
- Corona E104
- Blue Hour E105
- Kindle E106
- Sunspot E107

Graph Speck

- Cavern G250
- Steel Frame G251
- Stonework G252
- Gypsum G253
- Earthworks G254
- Cob G255
- Breccia G256
- Hearth G257
- Fired Clay G258
- Ionic Order G259
- Waterwheel G260
- Trellis G261
- Limecrete G262
- Plate Glass G263
- Riverfront G264
- Structure G265

Heather Felt

- Noil H510
- Alumina H511
- Bone Ash H512
- Pinon Tree H513
- Indian Ocean H516
- Mustard Seed H517
- Saffron H518
- Acai H519
- Armor H520
- Marina H522
- Grove H523
- Scarlet H525

Melange Check

- Cobblestone M534
- Bisque M535
- Soda Fired M536
- Goldspeck M537
- Pink Kaolin M538
- Brick Dust M539
- Alkaline M540
- Vapor Glaze M541
- Faience Blue M542
- Greenware M543

GRADE 9 (Continued)

Super Shearling

- Neroli S181
- Ambergris S182
- Aromatic Water S183
- Musk S184
- Earth Tincture S185
- Petitgrain S186
- Carrissa S187
- Enfleurage S188
- Cedar S189
- Heart Note S190
- Incense S191
- Ginger S192
- Green Sap S193
- Oakmoss S194
- Conifer S195
- Blue Cypress S196
- Seawater S197
- Lupine S198
- Attar S199
- Blackcurrant S200

Top Coat

- Shell T418
- Glaze T419
- Chromate T420
- Stoneware T421
- Aniline T422
- Braze T423
- Conduct T424
- Heat Set T425
- Claycast T426
- Toast T427
- Polish T428
- Frit T429
- Shellac T430
- Dip T431
- Indigo Ink T432
- Seal T433
- Weld T434
- Black Oxide T435

GRADE 10

Color Fuse

- Wax C154
- Emulsion C155
- Jell C156
- Enamel C157
- Liquefy C158
- Freeze C159
- Molten C160
- Solvent C161
- Plasma C162

Fleece

- Alum M191
- Aer M192
- Linseed M193
- Rubedo M194
- Ignis M195
- Cypher M196
- Balsam M197
- Glyph M198
- Nero M199

GRADE 11

Rubric

- Straw Clay R388
- Pink Laterite R389
- Rammed Earth R390
- Submerged Stone R391
- Glass Block R392
- Stacked Slate R393

GRADE 13

Emergent

- Galaxy E417
- Lunar Eclipse E418
- Backscatter E419
- Pegasus E420
- Earthshine E421
- Stardust E422
- Andromeda E423
- Astra E424
- Celestial E425
- Nova E426
- Meteor Shower E427

GRADE 14

Arc Angle

- Selene A135
- Erebus A136
- Theia A137
- Proteus A138
- Hestia A139

Scale Factor

- Basis S257
- Compound S258
- Tangent S259
- Tensor S260
- Matrix S261

GRADE 16

Mitered

- Black Walnut F422
- White Birch F423
- Golden Oak F424
- Redwood F425
- Blue Spruce F426
- Sapling F427

Navigate

- Florescent N300
- Pumice N301
- Interlace Camel N302
- Reticulated Stone N303
- Network Orange N304

Second Nature

- Moonflower S426
- Muscadine S427
- Chaparral S428
- Bougainvillea S429
- Nightshade S430
- Peppervine S431

listing matrices

UPHOLSTERY FABRICS

Leather - LA

Base Grade Leather

- White L215
- Shale L101
- Chocolate L204
- Chime L205
- Fossil L206
- Buttercup L214
- Poppy L210
- Parlor L211
- Marine L212
- Black L104
- Sand L200

Leather - LB

Merus

- Teak L110
- White Birch L111
- Beechwood L112
- Almond Shell L114
- Smoke L117
- Hopi L118
- Crushed Bark L119
- Black Truffle L123

Leather - LC

Pela

- Clove L216
- White Clay L217
- Chamois L218
- Buckwheat L220
- Hemlock L221
- Fern L222
- Cerulean L226
- Marigold L227
- Pomegranate L228
- Cordon L229
- Black Cherry L230
- Nightshade L232
- Morel L233
- Russet L234
- Carbon L235
- Pitch L236

Leather - LD

Fortis

- Canyon L310
- Bone L311
- Terra L313
- Nugget L314
- Black Rock L316

listing matrices

XPRESS UPHOLSTERY FABRICS

GRADE 1

Fundamentals

Black E523
Parakeet E516

Heather Tech

Dust Tech T162
Topaz Tech T163
Oat Tech T164
Flax Tech. T165
Loam Tech T167
Crag Tech T168
Basalt Tech T169
Loden Tech T170
Sagebrush Tech T171
Clear Tech. T180
Loch Tech T181
Ocean Tech T182
Onyx Tech T184
ObsidianTech T185

GRADE 2

Actuate

Aqueous. A209
Spectral A210
Facet A212
Syntax A213
Fortify A219
Favrile A220
Thermal A223

Complect

Melanite C293
Silverleaf C295
Cumulus C297

Crossgrain

Driftwood C177

Digi Tweed

Dust Tweed. D310
Topaz Tweed D311
Oat Tweed. D312
Loam Tweed D315
Crag Tweed. D316
Basalt Tweed D317
Loden Tweed. D318
Sagebrush Tweed D319
Loch Tweed. D329
Ocean Tweed D330
Onyx Tweed D332
Obsidian Tweed D333

Percept

Render. P126
Placid. P131
Pristine P107
Sublime P110
Context P111
Essence P112
Verve P115
Cardinality. P118

environmental data

UPHOLSTERY FABRICS

PATTERN	COMPOSITION	RECYCLED POLYESTER	
		POST CONSUMER	PRE CONSUMER
GRADE 1			
Bitstream	100% Recycled Polyester	58%	42%
Fundamentals	100% Recycled Polyester	80%	20%
Heather Tech	67% Recycled Polyester, 33% Polyester	67%	
Magnify	54% Recycled Polyester, 46% Polyester	54%	
Stimuli	100% Recycled Polyester	75%	25%
GRADE 2			
Actuate	40% Recycled Polyester, 60% Polyester	40%	
Complect	100% Recycled Polyester	100%	
Complement	100% Polyester		
Cross Dye	66% Recycled Polyester, 34% Polyester	61%	5%
Crossgrain	39% Recycled Polyester, 61% Polyester	39%	
Decoy	Face: 100% PVC, Back: 100% Polyester Knit		
Digi Tweed	55% Recycled Polyester, 45% Polyester	55%	
Graviton	100% Recycled Polyester	100%	
Intone	53% Recycled Polyester, 47% Polyester	18.6%	34.4%
Megacheck	100% Recycled Polyester		
Percept	81% Recycled Polyester, 19% Polyester	81%	
Ultra Durable	Anti-Bacterial, Anti-Microbial Treated Vinyl		

Continued on the following page.

environmental data

UPHOLSTERY FABRICS

PATTERN	COMPOSITION	RECYCLED POLYESTER	
		POST CONSUMER	PRE CONSUMER
GRADE 3			
Ample	77% Polyester, 17% Cotton, 6% Acrylic		
Doyenne	38.5% Recycled Polyester, 61.5% Polyester	38.5%	
Ecotone	100% Recycled Biodegradable** Polyester		
Fine Grain	100% Polyurethane Face, 100% Polyester Backing		
Intraweb	100% Recycled Biodegradable* Polyester	100%	
Marl Cloth	57% Recycled Polyester, 42% Polyester, 1% Nylon	30%	27%
Milieu	90% Recycled Polyester, 10% Polyester	90%	
Situ	55% Recycled Polyester, 45% Polyester		55%
Superspun	55% Recycled Polyester, 45% Polyester	55%	
Texture Map	100% Recycled Biodegradable** Polyester		
Twisted Tweed	100% Recycled Polyester	100%	
GRADE 4			
Demi Boucle	100% Recycled Polyester	100%	
Elastic Wool	50% Wool, 27% Polyester, 21% Nylon, 2% Elastane		
Formwork	51% Recycled Polyester, 49% Polyester	51%	
Grid State	BIODEGRADABLE CLEAN IMPACT TEXTILES™ - 100% Post Consumer Recycled Biodegradable Polyester**	100%	
High Frequency	87% Recycled Polyester, 12% Polyester, 1% Nylon	87%	
Interstice	85% Polyester, 12% Cotton, 3% Acrylic		
Lithoprint	FACE: 95% Polycarbonate Polyurethane, 5% Silicone BACK: 100% Polyester Knit		
Median	60% Polyester, 40% Recycled Polyester	40%	

Continued on the following page.

environmental data

UPHOLSTERY FABRICS

PATTERN	COMPOSITION	RECYCLED POLYESTER	
		POST CONSUMER	PRE CONSUMER
GRADE 4 (Continued)			
Meta Texture	95% Polycarbonate Polyurethane, 5% Silicon Back: Polyester Knit		
Modulus	75% Recycled Polyester, 25% Polyester	52%	23%
Trichroma	51% Recycled Polyester, 49% Polyester	51%	
Velvet Underground	100% Recycled Polyester		
GRADE 5			
Adage	82% Polyester, 14% Cotton, 4% Acrylic		
Cult Classic	100% Polyester		
Monotex	100% Polyurethane Face, 100% Polyester Knit Backing		
Particulate	65% Recycled Polyester, 35% Polyester	65%	
Synaptic	100% Polyurethane Face, 100% Polyester Knit Backing		
GRADE 6			
Amalgam	100% Recycled Polyester		
Duo Chrome	100% Polyester		
Haptic	68% Acrylic, 32% Polyester		
Outpress	82.7% Polyester, 17.33% Nylon		
Perilune	Face: 100% Polyurethane Back: 100% Polyester Knit		
Photogram	55% Polyester, 45% Recycled Polyester		45%
Soft Static	77% Recycled Polyester, 22% Polyester, 1% Nylon	77%	
Vector	78% Recycled Polyester, 22% Nylon	78%	

Continued on the following page.

environmental data

UPHOLSTERY FABRICS

PATTERN	COMPOSITION	RECYCLED POLYESTER	
		POST CONSUMER	PRE CONSUMER
GRADE 7			
Contrast Slub	62% Cotton, 17% Polyester, 14% Viscose, 7% Linen		
Ephemera	57% Polyester, 43% Acrylic		
Everyday Boucle	35% Recycled Wool, 27% Recycled Acrylic, 17% Acrylic, 8% Wool, 7% Recycled Polyester, 6% Polyester	3.5%	3.5%
Flex Wool	41% Wool, 41% Polyester, 17% Nylon, 1% Elastane		
Hyped Up	74% Recycled Polyester, 26% Polyester	74%	
Oeuvre	30% Wool, 22% Polyester, 18% Nylon, 18% Cotton, 12% Silk		
Pebble Melange	98% Polypropylene, 2% Polyester		
Sfraffito	100% UV Polyester		
Structured Stripe	100% Polyester		
Tilted Shift Redux	82% Recycled Polyester, 18% Nylon	82%	
Wool Fleck	51% Recycled Wool, 39% Recycled Acrylic, 10% Recycled Polyester		
GRADE 8			
Barberpole Basket	35% Cotton, 28% Wool, 26% Recycled Cotton, 7% Recycled Polyester, 4% Nylon	3.5%	3.5%
Construct	80% Wool, 20% Nylon		
Full Wool	100% Wool		
Geoglyph	98% Polypropylene, 2% Polyester		
Herringbone Hybrid	Coating: 100% Tekloom TPE Base Cloth: 100% Polyester Woven		
Homage	40% Wool, 24% Nylon, 20% Polyester, 16% Silk		
Wavefield	68% Polyester, 32% Recycled Polyester	32%	
Welded	Coating: 100% Tekloom TPE Base Cloth: 100% Polyester Woven		
Wooly Wooly	32% Polyester, 25% Wool, 25% Acrylic, 18% Cotton		

Continued on the following page.

environmental data

UPHOLSTERY FABRICS

PATTERN	COMPOSITION	RECYCLED POLYESTER	
		POST CONSUMER	PRE CONSUMER
GRADE 9			
Datastorm	50% Recycled Polyester, 50% Polyester	50%	
Equilux	54% Rayon, 43% Wool, 3% Nylon		
Graph Speck	51% Recycled Wool, 39% Recycled Acrylic, 10% Recycled Polyester		
Heather Felt	100% Wool		
Melange Check	51% Recycled Wool, 39% Recycled Acrylic, 10% Recycled Polyester		
Super Shearling	60% Wool, 28% Recycled Nylon, 12% Nylon		28%
Top Coat	100% Silicone		
GRADE 10			
Color Fuse	Coating: 100% Polycarbonate Polyurethane Base Cloth: 100% Cotton Woven		
Fleece	60% Wool, 24% Polyester, 16% Cotton		
GRADE 11			
Rubric	55% Wool, 30% Recycled Cotton, 7% Recycled Polyester, 5% Cotton, 3% Nylon		
GRADE 13			
Emergent	45% Cotton, 40% Recycled Wool, 10% Recycled Polyester, 3% Recycled Acrylic, 2% Recycled Nylon	10%	
GRADE 14			
Arc Angle	100% Polyester Face, 50% Nylon, 50% Polyester Stitching, 100% Polyfill Back		
Scale Factor	60% Polyester, 40% Recycled Polyester Face	40%	

Continued on the following page.

environmental data

UPHOLSTERY FABRICS

PATTERN	COMPOSITION	RECYCLED POLYESTER	
		POST CONSUMER	PRE CONSUMER
GRADE 16			
Mitered	49% Wool, 38% Recycled Cotton, 10% Polyester, 3% Nylon		38%
Navigate	92.5% Wool, 5.4% Nylon, 2.1% Polyester		
Second Nature	78% Wool, 21% Nylon, 1% Polyester		
LEATHER			
BASE GRADE LEATHER			
Merus	European Top Grain Semi-Aniline Dyed Cowhide		
Pela	Scandinavian Full Grain Semi-Aniline Dyed Cowhide		
Fortis	European Full Grain Semi-Aniline Dyed Cowhide		
MESH			
Nu-Tess Mesh	100% Polyester		
Shrinx Original Mesh	76% Polyester, 24% Nylon		
Shrinx Veil Mesh	96% Polyester, 2% Nylon, 2% Elastane		
Sabrina Mesh	100% Esters		
Around Mesh	100% Polyester		
Visio Mesh	100% Polyester		
Tone Performance Mesh	Elastoester/Polyester		
Tone Lifestyle Mesh	Elastoester/Polyester		

textile listings by pattern number

FABRIC PATTERN	COLOR CODE	TEKNION COLOR CODE	PATTERN NAME	COLOR NAME	APPLICATION GRADE
1001	02	E354	Egypt	Jirja	Panel - A
1001	03	E355	Egypt	Idku	Panel - A
1001	05	E352	Egypt	Mallawi	Panel - A
1001	06	E301	Egypt	Cairo	Panel - A
1001	07	E302	Egypt	Giza	Panel - A
1001	10	E304	Egypt	Port Said	Panel - A
1001	11	E356	Egypt	Edfu	Panel - A
1001	13	E305	Egypt	Suez	Panel - A
1002	01	W417	Wales	Bangor	Panel - A
1002	02	W403	Wales	Teifi	Panel - A
1002	03	W404	Wales	Newport	Panel - A
1002	04	W402	Wales	Swansea	Panel - A
1002	05	W416	Wales	Corwen	Panel - A
1002	06	W414	Wales	Wrexham	Panel - A
1002	07	W419	Wales	Pembroke	Panel - A
1002	08	W420	Wales	Kidwelly	Panel - A
1002	09	W418	Wales	Newbridge	Panel - A
1002	10	W421	Wales	Goodwick	Panel - A
1003	01	D418	India	Pushkar	Panel - 1
1003	02	D405	India	Gwalior	Panel - 1
1003	03	D404	India	Agra	Panel - 1
1003	04	D419	India	Kerala	Panel - 1
1003	05	D402	India	Bombay	Panel - 1
1003	06	D425	India	Manali	Panel - 1
1003	07	D408	India	Haora	Panel - 1
1003	08	D417	India	Kashmir	Panel - 1
1003	09	D423	India	Pune	Panel - 1
1003	10	D424	India	Mumbai	Panel - 1
1003	11	D407	India	Varanasi	Panel - 1
1003	12	D420	India	Munnar	Panel - 1
1003	13	D422	India	Chennai	Panel - 1
1003	14	D409	India	Surat	Panel - 1
1003	15	D421	India	Nanital	Panel - 1
1006	01	E380	Essentials	Gris	Panel - 1
1006	03	E382	Essentials	Dove	Panel - 1
1006	04	E383	Essentials	Brier	Panel - 1
1006	05	E384	Essentials	Light Grey	Panel - 1
1006	06	E385	Essentials	Slate	Panel - 1
1006	12	E391	Essentials	Banner	Panel - 1
1006	13	E409	Essentials	Snowdrift	Panel - 1
1006	14	E410	Essentials	Mist	Panel - 1
1006	16	E412	Essentials	Basil	Panel - 1
1006	17	E413	Essentials	Atlantic	Panel - 1
1006	19	E415	Essentials	Pebble	Panel - 1
1006	20	E416	Essentials	Tropic	Panel - 1
1007	01	W110	Warp Speed	Headwind	Panel - 1
1007	02	W111	Warp Speed	White Space	Panel - 1
1007	03	W112	Warp Speed	Strobe	Panel - 1
1007	04	W113	Warp Speed	Reed Arrow	Panel - 1
1007	05	W114	Warp Speed	Jet	Panel - 1
1007	06	W115	Warp Speed	Steel Racer	Panel - 1
1007	07	W116	Warp Speed	Earth Orbit	Panel - 1

Teknion Color Code Identifier (P) - Panel (U) - Upholstery (A) - Architectural

textile listings by pattern number

FABRIC PATTERN	COLOR CODE	TEKNION COLOR CODE	PATTERN NAME	COLOR NAME	APPLICATION GRADE
1008	01	F537	Flicker	Gleam	Panel - 1
1008	02	F531	Flicker	Glitter	Panel - 1
1008	03	F532	Flicker	Beam	Panel - 1
1008	04	F535	Flicker	Glint	Panel - 1
1008	05	F533	Flicker	Sparkle	Panel - 1
1008	06	F534	Flicker	Flash	Panel - 1
1008	07	F536	Flicker	Sheen	Panel - 1
1008	08	F539	Flicker	Luster	Panel - 1
1008	09	F538	Flicker	Glow	Panel - 1
1008	10	F540	Flicker	Twinkle	Panel - 1
1009	01	T531	Tangle	Snarl	Panel - A
1009	02	T533	Tangle	Interweave	Panel - A
1009	03	T532	Tangle	Knot	Panel - A
1009	04	T540	Tangle	Entwine	Panel - A
1009	05	T534	Tangle	Ravel	Panel - A
1009	06	T535	Tangle	Kinks	Panel - A
1009	07	T538	Tangle	Crook	Panel - A
1009	08	T536	Tangle	Spangle	Panel - A
1009	09	T537	Tangle	Tousle	Panel - A
1009	10	T539	Tangle	Muddle	Panel - A
1010	02	P402	Peru	Nazca	Panel - 1
1010	03	P407	Peru	Tingo Maria	Panel - 1
1010	04	P404	Peru	Casma	Panel - 1
1010	05	P403	Peru	Lima	Panel - 1
1010	06	P409	Peru	Callao	Panel - 1
1010	07	P406	Peru	Cuzco	Panel - 1
1010	09	P411	Peru	Tumbes	Panel - 1
1010	10	P405	Peru	Puno	Panel - 1
1011	01	T100	Topology	Ceramic	Panel - 1
1011	02	T101	Topology	Open Space	Panel - 1
1011	03	T102	Topology	Natural	Panel - 1
1011	04	T103	Topology	Cooling	Panel - 1
1011	05	T104	Topology	Shadow	Panel - 1
1012	01	M415	Makah	Shaker	Panel - 1
1012	02	M416	Makah	Luminous	Panel - 1
1012	03	M417	Makah	Arundo	Panel - 1
1012	04	M418	Makah	Solano	Panel - 1
1012	05	M419	Makah	Flitch	Panel - 1
1012	06	M420	Makah	Splint	Panel - 1
1015	02	B631	Beeline	Plumb	Panel - A
1015	03	B633	Beeline	Strand	Panel - A
1015	04	B634	Beeline	Thread	Panel - A
1015	05	B632	Beeline	String	Panel - A
1016	01	N122	Nitty Gritty	Block	Panel - A
1016	02	N133	Nitty Gritty	Gist	Panel - A
1016	03	N123	Nitty Gritty	Detail	Panel - A
1016	04	N134	Nitty Gritty	Factor	Panel - A
1016	05	N130	Nitty Gritty	Think	Panel - A
1016	06	N135	Nitty Gritty	Specific	Panel - A

Teknion Color Code Identifier (P) - Panel (U) - Upholstery (A) - Architectural

textile listings by pattern number

FABRIC PATTERN	COLOR CODE	TEKNION COLOR CODE	PATTERN NAME	COLOR NAME	APPLICATION GRADE
1017	01	W741	Wired Up	Linkage	Panel - A
1017	02	W742	Wired Up	Drawplate	Panel - A
1017	03	W743	Wired Up	Nichrome	Panel - A
1017	04	W739	Wired Up	Intermingle	Panel - A
1017	05	W731	Wired Up	Caged	Panel - A
1017	06	W744	Wired Up	Circuit	Panel - A
1017	07	W740	Wired Up	Mesh	Panel - A
1018	01	L327	Linen Weave	Coir	Panel - 1
1018	02	L328	Linen Weave	Bast	Panel - 1
1018	03	L329	Linen Weave	Dusty Grey	Panel - 1
1018	04	L330	Linen Weave	Mineral	Panel - 1
1018	05	L331	Linen Weave	Linseed	Panel - 1
1018	06	L308	Linen Weave	Gate	Panel - 1
1018	07	L309	Linen Weave	Sesame	Panel - 1
1019	01	B119 (P) - C111 (A)	Boucle Grid	Craie	Panel - 2, Architectural - 2
1019	02	B120 (P) - C112 (A)	Boucle Grid	Bis	Panel - 2, Architectural - 2
1019	03	B121 (P) - C113 (A)	Boucle Grid	Ardoise	Panel - 2, Architectural - 2
1019	04	B122 (P) - C114 (A)	Boucle Grid	Fauve	Panel - 2, Architectural - 2
1019	05	B123 (P) - C115 (A)	Boucle Grid	Nuage	Panel - 2, Architectural - 2
1020	01	L363 (P) - D100 (A)	Lustrado	Glassine	Panel - 1, Architectural - 2
1020	02	L364 (P) - D101 (A)	Lustrado	Acetate	Panel - 1, Architectural - 2
1020	03	L365 (P) - D102 (A)	Lustrado	Brilliance	Panel - 1, Architectural - 2
1020	05	L367 (P) - D104 (A)	Lustrado	Gallium	Panel - 1, Architectural - 2
1020	08	L370 (P) - D107 (A)	Lustrado	Sterling	Panel - 1, Architectural - 2
1021	01	P100 (P) - R186 (A)	Presse	Halo Effect	Panel - 1, Architectural - 2
1021	02	P101 (P) - R187 (A)	Presse	Overlay	Panel - 1, Architectural - 2
1021	03	P102 (P) - R188 (A)	Presse	Masked	Panel - 1, Architectural - 2
1021	04	P103 (P) - R189 (A)	Presse	Relief	Panel - 1, Architectural - 2
1021	05	P104 (P) - R190 (A)	Presse	Plaited	Panel - 1, Architectural - 2
1021	06	P105 (P) - R191 (A)	Presse	Gravure	Panel - 1, Architectural - 2
1022	01	B124 (P) - D111 (A)	Bandeau	Washi	Panel - 1, Architectural - 2
1022	03	B126 (P) - D113 (A)	Bandeau	Grosgrain	Panel - 1, Architectural - 2
1022	04	B127 (P) - D114 (A)	Bandeau	Palla	Panel - 1, Architectural - 2
1022	05	B128 (P) - D115 (A)	Bandeau	Farran	Panel - 1, Architectural - 2
1023	01	R176 (P) - R230 (A)	Artopia	Primer	Panel - 3, Architectural - 2
1023	02	R177 (P) - R231 (A)	Artopia	Kinetic	Panel - 3, Architectural - 2
1023	03	R178 (P) - R232 (A)	Artopia	Stencil	Panel - 3, Architectural - 2
1023	04	R179 (P) - R233 (A)	Artopia	Magenta	Panel - 3, Architectural - 2
1023	05	R180 (P) - R234 (A)	Artopia	Amberlith	Panel - 3, Architectural - 2
1023	06	R181 (P) - R235 (A)	Artopia	Cadmium	Panel - 3, Architectural - 2
1023	07	R182 (P) - R236 (A)	Artopia	Aquatint	Panel - 3, Architectural - 2
1023	08	R183 (P) - R237 (A)	Artopia	Vivid Blue	Panel - 3, Architectural - 2
1025	01	T727 (P) - E314 (A)	Emit	Watt	Panel - 1, Architectural 2
1025	02	T728 (P) - E315 (A)	Emit	Hertz	Panel - 1, Architectural 2
1025	03	T729 (P) - E316 (A)	Emit	Joule	Panel - 1, Architectural 2
1025	04	T730 (P) - E317 (A)	Emit	Dazzle	Panel - 1, Architectural 2
1025	05	T731 (P) - E318 (A)	Emit	Surge	Panel - 1, Architectural 2
1025	06	T732 (P) - E319 (A)	Emit	Particle	Panel - 1, Architectural 2

Teknion Color Code Identifier (P) - Panel (U) - Upholstery (A) - Architectural

textile listings by pattern number

FABRIC PATTERN	COLOR CODE	TEKNION COLOR CODE	PATTERN NAME	COLOR NAME	APPLICATION GRADE
1030	01	R600 (P) - 8590 (A)	Stratiform	Calcify	Panel - 2, Architectural - 2
1030	02	R601 (P) - 8591 (A)	Stratiform	Limestone	Panel - 2, Architectural - 2
1030	03	R602 (P) - 8592 (A)	Stratiform	Sandhill	Panel - 2, Architectural - 2
1030	04	R603 (P) - 8593 (A)	Stratiform	Moraine	Panel - 2, Architectural - 2
1030	05	R604 (P) - 8594 (A)	Stratiform	Glacial	Panel - 2, Architectural - 2
1030	06	R605 (P) - 8595 (A)	Stratiform	Bedrock	Panel - 2, Architectural - 2
1030	07	R606 (P) - 8596 (A)	Stratiform	Flint	Panel - 2, Architectural - 2
1031	01	C246	Cult Classic	Blue Velvet	Upholstery - 5
1031	02	C247	Cult Classic	Black Lagoon	Upholstery - 5
1031	03	C248	Cult Classic	Metropolis	Upholstery - 5
1031	04	C249	Cult Classic	Grey Gardens	Upholstery - 5
1031	05	C250	Cult Classic	White Heat	Upholstery - 5
1031	06	C251	Cult Classic	Ziggy Stardust	Upholstery - 5
1031	07	C252	Cult Classic	Pink Flamingos	Upholstery - 5
1031	08	C253	Cult Classic	Purple Noon	Upholstery - 5
1031	09	C254	Cult Classic	Blue Sunshine	Upholstery - 5
1031	10	C255	Cult Classic	Xanadu	Upholstery - 5
1031	11	C256	Cult Classic	Emerald City	Upholstery - 5
1031	12	C257	Cult Classic	Forrest Gump	Upholstery - 5
1032	01	P800 (P) - C293 (U/A)	Complect	Melanite	Panel - 2, Upholstery - 2, Architectural - 2
1032	02	P801 (P) - C294 (U/A)	Complect	Quarry	Panel - 2, Upholstery - 2, Architectural - 2
1032	03	P802 (P) - C295 (U/A)	Complect	Silverleaf	Panel - 2, Upholstery - 2, Architectural - 2
1032	04	P803 (P) - C296 (U/A)	Complect	Jute	Panel - 2, Upholstery - 2, Architectural - 2
1032	05	P804 (P) - C297 (U/A)	Complect	Cumulus	Panel - 2, Upholstery - 2, Architectural - 2
1032	06	P805 (P) - C298 (U/A)	Complect	Yolk	Panel - 2, Upholstery - 2, Architectural - 2
1032	07	P806 (P) - C299 (U/A)	Complect	Apricot	Panel - 2, Upholstery - 2, Architectural - 2
1032	08	P807 (P) - C300 (U/A)	Complect	Highlighter Pink	Panel - 2, Upholstery - 2, Architectural - 2
1032	09	P808 (P) - C301 (U/A)	Complect	Deep Crimson	Panel - 2, Upholstery - 2, Architectural - 2
1032	10	P809 (P) - C302 (U/A)	Complect	Autumn	Panel - 2, Upholstery - 2, Architectural - 2
1032	11	P810 (P) - C303 (U/A)	Complect	Opaline	Panel - 2, Upholstery - 2, Architectural - 2
1032	12	P811 (P) - C304 (U/A)	Complect	Reservoir	Panel - 2, Upholstery - 2, Architectural - 2
1032	13	P812 (P) - C305 (U/A)	Complect	Gentian	Panel - 2, Upholstery - 2, Architectural - 2
1032	14	P813 (P) - C306 (U/A)	Complect	Blue Ice	Panel - 2, Upholstery - 2, Architectural - 2
1032	15	P814 (P) - C307 (U/A)	Complect	Winter	Panel - 2, Upholstery - 2, Architectural - 2
1032	16	P815 (P) - C308 (U/A)	Complect	Boreal	Panel - 2, Upholstery - 2, Architectural - 2
1032	17	P816 (P) - C309 (U/A)	Complect	Turquoise	Panel - 2, Upholstery - 2, Architectural - 2
1032	18	P817 (P) - C310 (U/A)	Complect	Okra	Panel - 2, Upholstery - 2, Architectural - 2
1032	19	P818 (P) - C311 (U/A)	Complect	Agave	Panel - 2, Upholstery - 2, Architectural - 2
1034	01	R351 (P) - G222 (U/A)	Graviton	Dark Matter	Panel - 2, Upholstery - 2, Architectural - 2
1034	02	R352 (P) - G223 (U/A)	Graviton	Chain Reaction	Panel - 2, Upholstery - 2, Architectural - 2
1034	03	R353 (P) - G224 (U/A)	Graviton	Echo	Panel - 2, Upholstery - 2, Architectural - 2
1034	04	R354 (P) - G225 (U/A)	Graviton	Cloud Chamber	Panel - 2, Upholstery - 2, Architectural - 2
1034	05	R355 (P) - G226 (U/A)	Graviton	Albedo	Panel - 2, Upholstery - 2, Architectural - 2
1034	06	R356 (P) - G227 (U/A)	Graviton	Half Life	Panel - 2, Upholstery - 2, Architectural - 2
1034	07	R357 (P) - G228 (U/A)	Graviton	Luminous Flux	Panel - 2, Upholstery - 2, Architectural - 2
1034	08	R358 (P) - G229 (U/A)	Graviton	Fission	Panel - 2, Upholstery - 2, Architectural - 2
1034	09	R359 (P) - G230 (U/A)	Graviton	Kelvin	Panel - 2, Upholstery - 2, Architectural - 2
1034	10	R360 (P) - G231 (U/A)	Graviton	Boiling Point	Panel - 2, Upholstery - 2, Architectural - 2
1034	11	R361 (P) - G232 (U/A)	Graviton	Quantum	Panel - 2, Upholstery - 2, Architectural - 2
1034	12	R362 (P) - G233 (U/A)	Graviton	Condensation	Panel - 2, Upholstery - 2, Architectural - 2
1034	13	R363 (P) - G234 (U/A)	Graviton	Centigrade	Panel - 2, Upholstery - 2, Architectural - 2
1034	14	R364 (P) - G235 (U/A)	Graviton	Ampere	Panel - 2, Upholstery - 2, Architectural - 2
1034	15	R365 (P) - G236 (U/A)	Graviton	Cold Fusion	Panel - 2, Upholstery - 2, Architectural - 2
1034	16	R366 (P) - G237 (U/A)	Graviton	Hydrostatic	Panel - 2, Upholstery - 2, Architectural - 2

Teknion Color Code Identifier (P) - Panel (U) - Upholstery (A) - Architectural

textile listings by pattern number

FABRIC PATTERN	COLOR CODE	TEKNION COLOR CODE	PATTERN NAME	COLOR NAME	APPLICATION GRADE
2001	01	L165 (P) - M570 (U/A)	Milieu	Kettle	Panel - 4, Upholstery - 3, Architectural - 3
2001	02	L166 (P) - M571 (U/A)	Milieu	Thunder	Panel - 4, Upholstery - 3, Architectural - 3
2001	03	L167 (P) - M572 (U/A)	Milieu	Memory	Panel - 4, Upholstery - 3, Architectural - 3
2001	04	L168 (P) - M573 (U/A)	Milieu	Steam	Panel - 4, Upholstery - 3, Architectural - 3
2001	05	L169 (P) - M574 (U/A)	Milieu	Wing	Panel - 4, Upholstery - 3, Architectural - 3
2001	06	L170 (P) - M575 (U/A)	Milieu	Nest	Panel - 4, Upholstery - 3, Architectural - 3
2001	07	L171 (P) - M576 (U/A)	Milieu	Leap	Panel - 4, Upholstery - 3, Architectural - 3
2001	08	L172 (P) - M577 (U/A)	Milieu	Troupe	Panel - 4, Upholstery - 3, Architectural - 3
2001	09	L173 (P) - M578 (U/A)	Milieu	Peregrine	Panel - 4, Upholstery - 3, Architectural - 3
2001	10	L174 (P) - M579 (U/A)	Milieu	Hedge	Panel - 4, Upholstery - 3, Architectural - 3
2001	11	L175 (P) - M580 (U/A)	Milieu	Prickle	Panel - 4, Upholstery - 3, Architectural - 3
2001	12	L176 (P) - M581 (U/A)	Milieu	Spring	Panel - 4, Upholstery - 3, Architectural - 3
2001	13	L177 (P) - M582 (U/A)	Milieu	Muster	Panel - 4, Upholstery - 3, Architectural - 3
2001	14	L178 (P) - M583 (U/A)	Milieu	Herd	Panel - 4, Upholstery - 3, Architectural - 3
2001	15	L179 (P) - M584 (U/A)	Milieu	Parcel	Panel - 4, Upholstery - 3, Architectural - 3
2001	16	L180 (P) - M585 (U/A)	Milieu	Bloom	Panel - 4, Upholstery - 3, Architectural - 3
2001	17	L181 (P) - M586 (U/A)	Milieu	Fling	Panel - 4, Upholstery - 3, Architectural - 3
2001	18	L182 (P) - M587 (U/A)	Milieu	Flamboyance	Panel - 4, Upholstery - 3, Architectural - 3
2001	19	L183 (P) - M588 (U/A)	Milieu	Bazaar	Panel - 4, Upholstery - 3, Architectural - 3
2001	20	L184 (P) - M589 (U/A)	Milieu	Rabble	Panel - 4, Upholstery - 3, Architectural - 3
2001	21	L185 (P) - M590 (U/A)	Milieu	Zeal	Panel - 4, Upholstery - 3, Architectural - 3
2001	22	L186 (P) - M591 (U/A)	Milieu	Bevy	Panel - 4, Upholstery - 3, Architectural - 3
2001	23	L187 (P) - M592 (U/A)	Milieu	Loft	Panel - 4, Upholstery - 3, Architectural - 3
2001	24	L188 (P) - M593 (U/A)	Milieu	Float	Panel - 4, Upholstery - 3, Architectural - 3
2001	25	L189 (P) - M594 (U/A)	Milieu	Paddling	Panel - 4, Upholstery - 3, Architectural - 3
2001	26	L190 (P) - M595 (U/A)	Milieu	Shoal	Panel - 4, Upholstery - 3, Architectural - 3
2001	27	L191 (P) - M596 (U/A)	Milieu	Fleet	Panel - 4, Upholstery - 3, Architectural - 3
2002	01	W235 (P) - T397 (U/A)	Intraweb	Raster	Panel - 4, Upholstery - 3, Architectural - 3
2002	02	W236 (P) - T398 (U/A)	Intraweb	Dual Trace	Panel - 4, Upholstery - 3, Architectural - 3
2002	03	W237 (P) - T399 (U/A)	Intraweb	Polytope	Panel - 4, Upholstery - 3, Architectural - 3
2002	04	W238 (P) - T400 (U/A)	Intraweb	Superposition	Panel - 4, Upholstery - 3, Architectural - 3
2002	05	W239 (P) - T401 (U/A)	Intraweb	Coaxial	Panel - 4, Upholstery - 3, Architectural - 3
2002	06	W240 (P) - T402 (U/A)	Intraweb	Origin	Panel - 4, Upholstery - 3, Architectural - 3
2002	07	W241 (P) - T403 (U/A)	Intraweb	Slope	Panel - 4, Upholstery - 3, Architectural - 3
2002	08	W242 (P) - T404 (U/A)	Intraweb	Polarity	Panel - 4, Upholstery - 3, Architectural - 3
2002	09	W243 (P) - T405 (U/A)	Intraweb	Isosurface	Panel - 4, Upholstery - 3, Architectural - 3
2003	01	R264 (P) - H713 (U/A)	High Frequency	Eclipse Shadow	Panel - 5, Upholstery - 4, Architectural - 4
2003	02	R265 (P) - H714 (U/A)	High Frequency	Flash Lag	Panel - 5, Upholstery - 4, Architectural - 4
2003	03	R266 (P) - H715 (U/A)	High Frequency	Motion Blur	Panel - 5, Upholstery - 4, Architectural - 4
2003	04	R267 (P) - H716 (U/A)	High Frequency	Moon Illusion	Panel - 5, Upholstery - 4, Architectural - 4
2003	05	R268 (P) - H717 (U/A)	High Frequency	Solar Halo	Panel - 5, Upholstery - 4, Architectural - 4
2003	06	R269 (P) - H718 (U/A)	High Frequency	Laser Speckle	Panel - 5, Upholstery - 4, Architectural - 4
2003	07	R270 (P) - H719 (U/A)	High Frequency	Photon Shot	Panel - 5, Upholstery - 4, Architectural - 4
2003	08	R271 (P) - H720 (U/A)	High Frequency	Sea Fret	Panel - 5, Upholstery - 4, Architectural - 4
2003	09	R272 (P) - H721 (U/A)	High Frequency	Fata Morgana	Panel - 5, Upholstery - 4, Architectural - 4
2003	10	R273 (P) - H722 (U/A)	High Frequency	Hyperbolic Green	Panel - 5, Upholstery - 4, Architectural - 4
2003	11	R274 (P) - H723 (U/A)	High Frequency	Iceblink	Panel - 5, Upholstery - 4, Architectural - 4
2003	12	R275 (P) - H724 (U/A)	High Frequency	Plane Wave	Panel - 5, Upholstery - 4, Architectural - 4
2003	13	R276 (P) - H725 (U/A)	High Frequency	Liquid Crystal	Panel - 5, Upholstery - 4, Architectural - 4
2003	14	R277 (P) - H726 (U/A)	High Frequency	Aftereffect	Panel - 5, Upholstery - 4, Architectural - 4
2003	15	R278 (P) - H727 (U/A)	High Frequency	Gaussian	Panel - 5, Upholstery - 4, Architectural - 4
2003	16	R279 (P) - H728 (U/A)	High Frequency	Occlusion	Panel - 5, Upholstery - 4, Architectural - 4

Teknion Color Code Identifier (P) - Panel (U) - Upholstery (A) - Architectural

textile listings by pattern number

FABRIC PATTERN	COLOR CODE	TEKNION COLOR CODE	PATTERN NAME	COLOR NAME	APPLICATION GRADE
2004	01	R523 (P) - T541 (U/A)	Texture map	Mineralize	Panel - 4, Upholstery - 3, Architectural - 3
2004	02	R524 (P) - T542 (U/A)	Texture map	Henge	Panel - 4, Upholstery - 3, Architectural - 3
2004	03	R525 (P) - T543 (U/A)	Texture map	Rockfall	Panel - 4, Upholstery - 3, Architectural - 3
2004	04	R526 (P) - T544 (U/A)	Texture map	Trace Fossil	Panel - 4, Upholstery - 3, Architectural - 3
2004	05	R527 (P) - T545 (U/A)	Texture map	Windblown Silt	Panel - 4, Upholstery - 3, Architectural - 3
2004	06	R528 (P) - T546 (U/A)	Texture map	Holocene	Panel - 4, Upholstery - 3, Architectural - 3
2004	07	R529 (P) - T547 (U/A)	Texture map	Coralline	Panel - 4, Upholstery - 3, Architectural - 3
2004	08	R530 (P) - T548 (U/A)	Texture map	Latent Heat	Panel - 4, Upholstery - 3, Architectural - 3
2004	09	R531 (P) - T549 (U/A)	Texture map	Water Table	Panel - 4, Upholstery - 3, Architectural - 3
2004	10	R532 (P) - T550 (U/A)	Texture map	Elm Pollen	Panel - 4, Upholstery - 3, Architectural - 3
2004	11	R533 (P) - T551 (U/A)	Texture map	Miocene	Panel - 4, Upholstery - 3, Architectural - 3
2004	12	R534 (P) - T552 (U/A)	Texture map	Linden	Panel - 4, Upholstery - 3, Architectural - 3
2004	13	R535 (P) - T553 (U/A)	Texture map	Green Algae	Panel - 4, Upholstery - 3, Architectural - 3
2004	14	R536 (P) - T554 (U/A)	Texture map	Thaw	Panel - 4, Upholstery - 3, Architectural - 3
2004	15	R537 (P) - T555 (U/A)	Texture map	Continental Drift	Panel - 4, Upholstery - 3, Architectural - 3
2004	16	R538 (P) - T556 (U/A)	Texture map	Ocean Basin	Panel - 4, Upholstery - 3, Architectural - 3
2005	01	R425 (P) - D433	Demi Boucle	Caviar	Panel - 6, Upholstery - 4, Architectural - 4
2005	02	R426 (P) - D434	Demi Boucle	Chia	Panel - 6, Upholstery - 4, Architectural - 4
2005	03	R427 (P) - D435	Demi Boucle	Wishbone	Panel - 6, Upholstery - 4, Architectural - 4
2005	04	R428 (P) - D436	Demi Boucle	Epsom	Panel - 6, Upholstery - 4, Architectural - 4
2005	05	R429 (P) - D437	Demi Boucle	Talc	Panel - 6, Upholstery - 4, Architectural - 4
2005	06	R430 (P) - D438	Demi Boucle	Igneous	Panel - 6, Upholstery - 4, Architectural - 4
2005	07	R431 (P) - D439	Demi Boucle	Cloudberry	Panel - 6, Upholstery - 4, Architectural - 4
2005	08	R432 (P) - D440	Demi Boucle	Downpour	Panel - 6, Upholstery - 4, Architectural - 4
2005	09	R433 (P) - D441	Demi Boucle	Crocus	Panel - 6, Upholstery - 4, Architectural - 4
2005	10	R434 (P) - D442	Demi Boucle	Keemun	Panel - 6, Upholstery - 4, Architectural - 4
2005	11	R435 (P) - D443	Demi Boucle	Desert Peach	Panel - 6, Upholstery - 4, Architectural - 4
2005	12	R436 (P) - D444	Demi Boucle	Moss-Rose	Panel - 6, Upholstery - 4, Architectural - 4
2005	13	R437 (P) - D445	Demi Boucle	Spun Sugar	Panel - 6, Upholstery - 4, Architectural - 4
2005	14	R438 (P) - D446	Demi Boucle	Sanddollar	Panel - 6, Upholstery - 4, Architectural - 4
2005	15	R439 (P) - D447	Demi Boucle	Chamomile	Panel - 6, Upholstery - 4, Architectural - 4
2005	16	R440 (P) - D448	Demi Boucle	Sea Glass	Panel - 6, Upholstery - 4, Architectural - 4
2005	17	R441 (P) - D449	Demi Boucle	Scarab	Panel - 6, Upholstery - 4, Architectural - 4
2005	18	R442 (P) - D450	Demi Boucle	Nori	Panel - 6, Upholstery - 4, Architectural - 4
2006	01	R607 (P) - M237 (U/A)	Median	Bracken	Panel - 5, Upholstery - 4, Architectural - 3
2006	02	R608 (P) - M238 (U/A)	Median	Cinquefoil	Panel - 5, Upholstery - 4, Architectural - 3
2006	03	R609 (P) - M239 (U/A)	Median	Metallic Salt	Panel - 5, Upholstery - 4, Architectural - 3
2006	04	R610 (P) - M240 (U/A)	Median	Downy Phlox	Panel - 5, Upholstery - 4, Architectural - 3
2006	05	R611 (P) - M241 (U/A)	Median	Condensata	Panel - 5, Upholstery - 4, Architectural - 3
2006	06	R612 (P) - M242 (U/A)	Median	Calcofluor	Panel - 5, Upholstery - 4, Architectural - 3
2006	07	R613 (P) - M243 (U/A)	Median	Alder Cone	Panel - 5, Upholstery - 4, Architectural - 3
2006	08	R614 (P) - M244 (U/A)	Median	Birch Leaf	Panel - 5, Upholstery - 4, Architectural - 3
2006	09	R615 (P) - M245 (U/A)	Median	Leblanc	Panel - 5, Upholstery - 4, Architectural - 3
2006	10	R616 (P) - M246 (U/A)	Median	Jaune	Panel - 5, Upholstery - 4, Architectural - 3
2006	11	R617 (P) - M247(U/A)	Median	Grana	Panel - 5, Upholstery - 4, Architectural - 3
2006	12	R618 (P) - M248 (U/A)	Median	Comandra	Panel - 5, Upholstery - 4, Architectural - 3
2006	13	R619 (P) - M249 (U/A)	Median	Mignonette	Panel - 5, Upholstery - 4, Architectural - 3
2006	14	R620 (P) - M250 (U/A)	Median	Rubia	Panel - 5, Upholstery - 4, Architectural - 3
2006	15	R621 (P) - M251 (U/A)	Median	Murex	Panel - 5, Upholstery - 4, Architectural - 3
2006	16	R622 (P) - M252 (U/A)	Median	Phoenician	Panel - 5, Upholstery - 4, Architectural - 3
2006	17	R623 (P) - M253 (U/A)	Median	Isatia	Panel - 5, Upholstery - 4, Architectural - 3
2006	18	R624 (P) - M254 (U/A)	Median	Tinctoria	Panel - 5, Upholstery - 4, Architectural - 3
2006	19	R625 (P) - M255 (U/A)	Median	Prairie Bluet	Panel - 5, Upholstery - 4, Architectural - 3
2006	20	R626 (P) - M256 (U/A)	Median	Popinjay	Panel - 5, Upholstery - 4, Architectural - 3
2006	21	R627 (P) - M257 (U/A)	Median	Herbal	Panel - 5, Upholstery - 4, Architectural - 3
2006	22	R628 (P) - M258 (U/A)	Median	Verdulet	Panel - 5, Upholstery - 4, Architectural - 3

Teknion Color Code Identifier (P) - Panel (U) - Upholstery (A) - Architectural

textile listings by pattern number

FABRIC PATTERN	COLOR CODE	TEKNION COLOR CODE	PATTERN NAME	COLOR NAME	APPLICATION GRADE
4001	01	E505	Fundamentals	Banner	Upholstery - 1
4001	03	E535	Fundamentals	Latte	Upholstery - 1
4001	04	E518	Fundamentals	Brier	Upholstery - 1
4001	05	E532	Fundamentals	Dove	Upholstery - 1
4001	06	E522	Fundamentals	Light Grey	Upholstery - 1
4001	07	E519	Fundamentals	Sudan	Upholstery - 1
4001	09	E528	Fundamentals	Verde	Upholstery - 1
4001	10	E533	Fundamentals	Nickel	Upholstery - 1
4001	12	E516	Fundamentals	Parakeet	Upholstery - 1
4001	13	E534	Fundamentals	Slate	Upholstery - 1
4001	14	E526	Fundamentals	Tangelo	Upholstery - 1
4001	15	E529	Fundamentals	Aqua	Upholstery - 1
4001	16	E521	Fundamentals	Armory	Upholstery - 1
4001	17	E504	Fundamentals	Salsa	Upholstery - 1
4001	18	E530	Fundamentals	Azure	Upholstery - 1
4001	19	E523	Fundamentals	Black	Upholstery - 1
4001	21	E520	Fundamentals	Wendigo	Upholstery - 1
4001	22	E536	Fundamentals	Marble	Upholstery - 1
4001	23	E537	Fundamentals	Moonstone	Upholstery - 1
4001	24	E538	Fundamentals	Lapris	Upholstery - 1
4001	25	E539	Fundamentals	Malachite	Upholstery - 1
4007	01	H510	Heather Felt	Noil	Upholstery - 9
4007	02	H511	Heather Felt	Alumina	Upholstery - 9
4007	03	H512	Heather Felt	Bone Ash	Upholstery - 9
4007	04	H513	Heather Felt	Pinon Tree	Upholstery - 9
4007	07	H516	Heather Felt	Indian Ocean	Upholstery - 9
4007	08	H517	Heather Felt	Mustard Seed	Upholstery - 9
4007	09	H518	Heather Felt	Saffron	Upholstery - 9
4007	10	H519	Heather Felt	Acai	Upholstery - 9
4007	11	H520	Heather Felt	Armor	Upholstery - 9
4007	13	H522	Heather Felt	Marina	Upholstery - 9
4007	14	H523	Heather Felt	Grove	Upholstery - 9
4007	16	H525	Heather Felt	Scarlet	Upholstery - 9
4008	02	F207	Full Wool	Blanc	Upholstery - 8
4008	04	F209	Full Wool	Hot Stone	Upholstery - 8
4008	05	F210	Full Wool	Éclair	Upholstery - 8
4008	06	F211	Full Wool	Macchiato	Upholstery - 8
4008	07	F212	Full Wool	Ink	Upholstery - 8
4008	09	F214	Full Wool	Tigerlily	Upholstery - 8
4008	10	F215	Full Wool	Fresh Water	Upholstery - 8
4008	11	F216	Full Wool	Serpent	Upholstery - 8
4008	13	F218	Full Wool	Neptune	Upholstery - 8
4008	14	F219	Full Wool	Safari	Upholstery - 8
4008	15	F220	Full Wool	Vintage Red	Upholstery - 8
4008	16	F221	Full Wool	Lagoon	Upholstery - 8
4008	17	F222	Full Wool	Oak Room	Upholstery - 8
4008	18	F223	Full Wool	Deep Orchid	Upholstery - 8
4008	19	F224	Full Wool	Aries	Upholstery - 8
4008	20	F225	Full Wool	Seashell	Upholstery - 8
4008	21	F226	Full Wool	Star Fruit	Upholstery - 8
4008	22	F227	Full Wool	Clover	Upholstery - 8
4008	23	F228	Full Wool	Ocean Shadow	Upholstery - 8
4008	24	F229	Full Wool	Deep Sea	Upholstery - 8
4008	25	F230	Full Wool	Sea Holly	Upholstery - 8
4008	26	F231	Full Wool	London Fog	Upholstery - 8

Teknion Color Code Identifier (P) - Panel (U) - Upholstery (A) - Architectural

textile listings by pattern number

FABRIC PATTERN	COLOR CODE	TEKNION COLOR CODE	PATTERN NAME	COLOR NAME	APPLICATION GRADE
4009	01	R150 (P) - C120 (U)	Cross Dye	Earl Grey	Panel - 1, Upholstery - 2
4009	02	R151 (P) - C121 (U)	Cross Dye	Linen	Panel - 1, Upholstery - 2
4009	03	R152 (P) - C122 (U)	Cross Dye	Light Birch	Panel - 1, Upholstery - 2
4009	04	R153 (P) - C123 (U)	Cross Dye	Almond	Panel - 1, Upholstery - 2
4009	05	R154 (P) - C124 (U)	Cross Dye	Soft Shadow	Panel - 1, Upholstery - 2
4009	06	R155 (P) - C125 (U)	Cross Dye	Ace Grey	Panel - 1, Upholstery - 2
4009	07	R156 (P) - C126 (U)	Cross Dye	Cool Ash	Panel - 1, Upholstery - 2
4009	08	R157 (P) - C127 (U)	Cross Dye	Carotene	Panel - 1, Upholstery - 2
4009	09	R158 (P) - C128 (U)	Cross Dye	Crimson	Panel - 1, Upholstery - 2
4009	10	R159 (P) - C129 (U)	Cross Dye	Carmine	Panel - 1, Upholstery - 2
4009	11	R160 (P) - C130 (U)	Cross Dye	Tea Tree	Panel - 1, Upholstery - 2
4009	12	R161 (P) - C131 (U)	Cross Dye	Artichoke	Panel - 1, Upholstery - 2
4009	13	R162 (P) - C132 (U)	Cross Dye	Plum	Panel - 1, Upholstery - 2
4009	14	R163 (P) - C133 (U)	Cross Dye	Watercolor	Panel - 1, Upholstery - 2
4009	15	R164 (P) - C134 (U)	Cross Dye	Azure	Panel - 1, Upholstery - 2
4009	16	R165 (P) - C135 (U)	Cross Dye	Logwood	Panel - 1, Upholstery - 2
4010	01	R166 (P) - F314 (U)	Marl Cloth	Yurt	Panel - 2, Upholstery - 3
4010	05	R170 (P) - F318 (U)	Marl Cloth	Dry Stone	Panel - 2, Upholstery - 3
4010	08	R173 (P) - F321 (U)	Marl Cloth	Blacksmith	Panel - 2, Upholstery - 3
4010	09	R174 (P) - F322 (U)	Marl Cloth	Sea Nomad	Panel - 2, Upholstery - 3
4010	10	R175 (P) - F323 (U)	Marl Cloth	Wild Fruit	Panel - 2, Upholstery - 3
4010	11	R195 (P) - F324 (U)	Marl Cloth	Dreamscape	Panel - 2, Upholstery - 3
4010	12	R196 (P) - F325 (U)	Marl Cloth	Landmark	Panel - 2, Upholstery - 3
4010	13	R197 (P) - F326 (U)	Marl Cloth	Tree Bark	Panel - 2, Upholstery - 3
4015	01	V310	Velvet Underground	Metal Machine	Upholstery - 4
4015	04	V313	Velvet Underground	Flame Desire	Upholstery - 4
4015	06	V315	Velvet Underground	Blue Denim	Upholstery - 4
4015	08	V317	Velvet Underground	Dark Moon	Upholstery - 4
4015	09	V318	Velvet Underground	Blacktop	Upholstery - 4
4015	11	V319	Velvet Underground	Brass Section	Upholstery - 4
4015	13	V320	Velvet Underground	Shock Wave	Upholstery - 4
4015	19	V321	Velvet Underground	Full Phase	Upholstery - 4
4015	20	V322	Velvet Underground	Dark Current	Upholstery - 4
4015	10	V323	Velvet Underground	Smoke Screen	Upholstery - 4
4015	12	V324	Velvet Underground	Wallflower	Upholstery - 4
4015	14	V325	Velvet Underground	Ultraviolet	Upholstery - 4
4015	15	V326	Velvet Underground	Purple Rain	Upholstery - 4
4015	16	V327	Velvet Underground	Green Room	Upholstery - 4
4015	17	V328	Velvet Underground	Garden Level	Upholstery - 4
4015	18	V329	Velvet Underground	New Wave	Upholstery - 4
4019	01	M140	Magnify	Telescope	Upholstery - 1
4019	02	M141	Magnify	Polished Mirror	Upholstery - 1
4019	03	M142	Magnify	Reflection	Upholstery - 1
4019	04	M143	Magnify	Zoom Lens	Upholstery - 1
4019	05	M144	Magnify	Force Field	Upholstery - 1
4019	06	M145	Magnify	Long Wave	Upholstery - 1
4019	07	M146	Magnify	Deep Water	Upholstery - 1
4019	08	M147	Magnify	Light Beam	Upholstery - 1
4019	09	M148	Magnify	Flare Up	Upholstery - 1
4019	10	M149	Magnify	Viewfinder	Upholstery - 1
4019	11	M150	Magnify	Bright Eyes	Upholstery - 1
4019	12	M151	Magnify	Infrared	Upholstery - 1
4019	13	M152	Magnify	Intensity	Upholstery - 1

Teknion Color Code Identifier (P) - Panel (U) - Upholstery (A) - Architectural

textile listings by pattern number

FABRIC PATTERN	COLOR CODE	TEKNION COLOR CODE	PATTERN NAME	COLOR NAME	APPLICATION GRADE
4021	01	V490	Ultra Durable	Wet Clay	Upholstery - 2
4021	02	V180	Ultra Durable	Mohair	Upholstery - 2
4021	03	V182	Ultra Durable	Iced Coffee	Upholstery - 2
4021	04	V493	Ultra Durable	Silver Age	Upholstery - 2
4021	08	V497	Ultra Durable	Morning Glory	Upholstery - 2
4021	11	V500	Ultra Durable	Neptune	Upholstery - 2
4021	12	V184	Ultra Durable	Tungsten	Upholstery - 2
4021	14	V503	Ultra Durable	Fig	Upholstery - 2
4021	15	V187	Ultra Durable	Black Velvet	Upholstery - 2
4023	01	L110	Merus	Teak	Leather - LB
4023	02	L111	Merus	White Birch	Leather - LB
4023	03	L112	Merus	Beechwood	Leather - LB
4023	05	L114	Merus	Almond Shell	Leather - LB
4023	08	L117	Merus	Smoke	Leather - LB
4023	09	L118	Merus	Hopi	Leather - LB
4023	10	L119	Merus	Crushed Bark	Leather - LB
4023	14	L123	Merus	Black Truffle	Leather - LB
4024	01	L216	Pela	Clove	Leather - LC
4024	02	L217	Pela	White Clay	Leather - LC
4024	03	L218	Pela	Chamois	Leather - LC
4024	05	L220	Pela	Buckwheat	Leather - LC
4024	06	L221	Pela	Hemlock	Leather - LC
4024	07	L222	Pela	Fern	Leather - LC
4024	11	L226	Pela	Cerulean	Leather - LC
4024	12	L227	Pela	Marigold	Leather - LC
4024	13	L228	Pela	Pomegranate	Leather - LC
4024	14	L229	Pela	Cordon	Leather - LC
4024	15	L230	Pela	Black Cherry	Leather - LC
4024	17	L232	Pela	Nightshade	Leather - LC
4024	18	L233	Pela	Morel	Leather - LC
4024	19	L234	Pela	Russet	Leather - LC
4024	20	L235	Pela	Carbon	Leather - LC
4024	21	L236	Pela	Pitch	Leather - LC
4025	01	L310	Fortis	Canyon	Leather - LD
4025	02	L311	Fortis	Bone	Leather - LD
4025	04	L313	Fortis	Terra	Leather - LD
4025	05	L314	Fortis	Nugget	Leather - LD
4025	07	L316	Fortis	Black Rock	Leather - LD
4029	01	F115	Situ	Archeology	Upholstery - 3
4029	02	F116	Situ	Pozzolana	Upholstery - 3
4029	03	F117	Situ	Amphora	Upholstery - 3
4029	04	F118	Situ	Statue	Upholstery - 3
4029	05	F119	Situ	Wind Tower	Upholstery - 3
4029	06	F120	Situ	Tunnel	Upholstery - 3
4029	07	F121	Situ	Phosphor	Upholstery - 3
4029	08	F122	Situ	Flamante	Upholstery - 3
4029	09	F123	Situ	Hydro	Upholstery - 3
4029	11	F125	Situ	Terrena	Upholstery - 3
4029	12	F126	Situ	Mar	Upholstery - 3

Teknion Color Code Identifier (P) - Panel (U) - Upholstery (A) - Architectural

textile listings by pattern number

FABRIC PATTERN	COLOR CODE	TEKNION COLOR CODE	PATTERN NAME	COLOR NAME	APPLICATION GRADE
4030	01	S135	Synaptic	Contact	Upholstery - 5
4030	02	S136	Synaptic	Phase	Upholstery - 5
4030	04	S138	Synaptic	Conduit	Upholstery - 5
4030	05	S139	Synaptic	Sensory	Upholstery - 5
4030	06	S140	Synaptic	Receptor	Upholstery - 5
4030	07	S141	Synaptic	Traverse	Upholstery - 5
4030	08	S142	Synaptic	Transmission	Upholstery - 5
4030	10	S144	Synaptic	Axon	Upholstery - 5
4033	01	S145	Stimuli	Sensitive	Upholstery - 1
4033	02	S146	Stimuli	Turbinado	Upholstery - 1
4033	03	S147	Stimuli	Rush	Upholstery - 1
4033	04	S148	Stimuli	Zest	Upholstery - 1
4033	05	S149	Stimuli	Tactile	Upholstery - 1
4033	06	S150	Stimuli	Daredevil	Upholstery - 1
4033	07	S151	Stimuli	Euphoria	Upholstery - 1
4033	08	S152	Stimuli	Vigor	Upholstery - 1
4033	09	S153	Stimuli	Thrill	Upholstery - 1
4033	10	S154	Stimuli	Catalyst	Upholstery - 1
4033	11	S155	Stimuli	Black Tea	Upholstery - 1
4034	01	T220	Ample	Quark	Upholstery - 3
4034	02	T221	Ample	Voltage	Upholstery - 3
4034	03	T222	Ample	Sunburst	Upholstery - 3
4034	04	T223	Ample	Gamma	Upholstery - 3
4034	05	T224	Ample	Radioactive	Upholstery - 3
4034	06	T225	Ample	Chameleon	Upholstery - 3
4034	07	T226	Ample	Volcanic	Upholstery - 3
4034	08	T227	Ample	Reaction	Upholstery - 3
4034	09	T228	Ample	Zeal	Upholstery - 3
4034	10	T229	Ample	Cosmic	Upholstery - 3
4034	11	T239	Ample	Blue Comet	Upholstery - 3
4034	12	T240	Ample	Cavern	Upholstery - 3
4034	13	T241	Ample	Vortex	Upholstery - 3
4034	14	T242	Ample	Neutron	Upholstery - 3
4034	15	T243	Ample	Tempered	Upholstery - 3
4034	16	T244	Ample	Aurora	Upholstery - 3
4035	01	H100	Homage	Respect	Upholstery - 8
4035	02	H102	Homage	Winsome	Upholstery - 8
4035	03	H105	Homage	Esteem	Upholstery - 8
4035	04	H103	Homage	Dashing	Upholstery - 8
4035	05	H104	Homage	Authority	Upholstery - 8
4035	07	H106	Homage	Soigné	Upholstery - 8
4035	08	H107	Homage	Valor	Upholstery - 8
4035	09	H108	Homage	Sanguine	Upholstery - 8
4035	10	H109	Homage	Vivant	Upholstery - 8
4035	11	H110	Homage	Guild	Upholstery - 8
4035	12	H111	Homage	Pinnacle	Upholstery - 8
4035	13	H112	Homage	Noble	Upholstery - 8

Teknion Color Code Identifier (P) - Panel (U) - Upholstery (A) - Architectural

textile listings by pattern number

FABRIC PATTERN	COLOR CODE	TEKNION COLOR CODE	PATTERN NAME	COLOR NAME	APPLICATION GRADE
4040	01	C814 (P) - P107 (U/A)	Percept	Pristine	Panel - 2, Upholstery - 2, Architectural - 2
4040	02	C817 (P) - P110 (U/A)	Percept	Sublime	Panel - 2, Upholstery - 2, Architectural - 2
4040	03	C818 (P) - P111 (U/A)	Percept	Context	Panel - 2, Upholstery - 2, Architectural - 2
4040	04	C819 (P) - P112 (U/A)	Percept	Essence	Panel - 2, Upholstery - 2, Architectural - 2
4040	06	C815 (P) - P108 (U/A)	Percept	Intrinsic	Panel - 2, Upholstery - 2, Architectural - 2
4040	07	C813 (P) - P106 (U/A)	Percept	Schema	Panel - 2, Upholstery - 2, Architectural - 2
4040	08	C821 (P) - P114 (U/A)	Percept	Epiphany	Panel - 2, Upholstery - 2, Architectural - 2
4040	09	C824 (P) - P117 (U/A)	Percept	Reason	Panel - 2, Upholstery - 2, Architectural - 2
4040	10	C827 (P) - P120 (U/A)	Percept	Jubilant	Panel - 2, Upholstery - 2, Architectural - 2
4040	11	C820 (P) - P113 (U/A)	Percept	Tenet	Panel - 2, Upholstery - 2, Architectural - 2
4040	12	C830 (P) - P123 (U/A)	Percept	Peak	Panel - 2, Upholstery - 2, Architectural - 2
4040	13	C823 (P) - P116 (U/A)	Percept	Amplitude	Panel - 2, Upholstery - 2, Architectural - 2
4040	14	C829 (P) - P122 (U/A)	Percept	Harmonic	Panel - 2, Upholstery - 2, Architectural - 2
4040	15	C826 (P) - P119 (U/A)	Percept	Nebula	Panel - 2, Upholstery - 2, Architectural - 2
4040	16	C831 (P) - P124 (U/A)	Percept	Devotion	Panel - 2, Upholstery - 2, Architectural - 2
4040	17	C825 (P) - P118 (U/A)	Percept	Cardinality	Panel - 2, Upholstery - 2, Architectural - 2
4040	18	C828 (P) - P121 (U/A)	Percept	Ignite	Panel - 2, Upholstery - 2, Architectural - 2
4040	19	C822 (P) - P115 (U/A)	Percept	Verve	Panel - 2, Upholstery - 2, Architectural - 2
4040	20	C832 (P) - P125 (U/A)	Percept	Transmit	Panel - 2, Upholstery - 2, Architectural - 2
4040	21	C833 (P) - P126 (U/A)	Percept	Render	Panel - 2, Upholstery - 2, Architectural - 2
4040	22	C834 (P) - P127 (U/A)	Percept	Pulse	Panel - 2, Upholstery - 2, Architectural - 2
4040	23	C835 (P) - P128 (U/A)	Percept	Constant	Panel - 2, Upholstery - 2, Architectural - 2
4040	24	C836 (P) - P129 (U/A)	Percept	Radiant	Panel - 2, Upholstery - 2, Architectural - 2
4040	25	C837 (P) - P130 (U/A)	Percept	Propagate	Panel - 2, Upholstery - 2, Architectural - 2
4040	26	C838 (P) - P131 (U/A)	Percept	Placid	Panel - 2, Upholstery - 2, Architectural - 2
4040	27	C839 (P) - P132 (U/A)	Percept	Singular	Panel - 2, Upholstery - 2, Architectural - 2
4040	28	C840 (P) - P133 (U/A)	Percept	Fringe	Panel - 2, Upholstery - 2, Architectural - 2
4041	01	M160	Perilune	Terrene	Upholstery - 6
4041	02	M161	Perilune	Asteroid	Upholstery - 6
4041	03	M162	Perilune	Stellar	Upholstery - 6
4041	04	M163	Perilune	Satellite	Upholstery - 6
4041	05	M164	Perilune	Gravity	Upholstery - 6
4041	06	M165	Perilune	Red Shift	Upholstery - 6
4041	07	M166	Perilune	Blue Moon	Upholstery - 6
4041	08	M167	Perilune	Space Age	Upholstery - 6
4041	09	M168	Perilune	Verdant	Upholstery - 6
4041	10	M169	Perilune	Pulsar	Upholstery - 6
4041	11	M170	Perilune	Solar	Upholstery - 6
4041	12	M171	Perilune	Hot Crater	Upholstery - 6
4042	01	C279 (P) - T148 (U/A)	Complement	Nightfall	Panel - 2, Upholstery 2, Architectural - 2
4042	02	C280 (P) - T149 (U/A)	Complement	Dusk	Panel - 2, Upholstery 2, Architectural - 2
4042	03	C281 (P) - T150 (U/A)	Complement	Grey Wolf	Panel - 2, Upholstery 2, Architectural - 2
4042	04	C281 (P) - T151 (U/A)	Complement	Sea Salt	Panel - 2, Upholstery 2, Architectural - 2
4042	05	C283 (P) - T152 (U/A)	Complement	Roan	Panel - 2, Upholstery 2, Architectural - 2
4042	06	C284 (P) - T153 (U/A)	Complement	Amarillo	Panel - 2, Upholstery 2, Architectural - 2
4042	07	C285 (P) - T154 (U/A)	Complement	Arancia	Panel - 2, Upholstery 2, Architectural - 2
4042	08	C286 (P) - T155 (U/A)	Complement	Carnelian	Panel - 2, Upholstery 2, Architectural - 2
4042	09	C287 (P) - T156 (U/A)	Complement	Garnet	Panel - 2, Upholstery 2, Architectural - 2
4042	11	C289 (P) - T158 (U/A)	Complement	Fresh Air	Panel - 2, Upholstery 2, Architectural - 2
4042	12	C290 (P) - T159 (U/A)	Complement	Peacock	Panel - 2, Upholstery 2, Architectural - 2

Teknion Color Code Identifier (P) - Panel (U) - Upholstery (A) - Architectural

textile listings by pattern number

FABRIC PATTERN	COLOR CODE	TEKNION COLOR CODE	PATTERN NAME	COLOR NAME	APPLICATION GRADE
4046	01	F401	Fine Grain	Warm Earth	Upholstery - 3
4046	02	F402	Fine Grain	River Ore	Upholstery - 3
4046	03	F403	Fine Grain	Saw Dust	Upholstery - 3
4046	04	F404	Fine Grain	Putty Paste	Upholstery - 3
4046	05	F405	Fine Grain	White Out	Upholstery - 3
4046	06	F406	Fine Grain	Lunar Regolith	Upholstery - 3
4046	07	F407	Fine Grain	Metallic Swarf	Upholstery - 3
4046	08	F408	Fine Grain	Volcanic Ash	Upholstery - 3
4046	09	F409	Fine Grain	Carbon Neutral	Upholstery - 3
4046	10	F410	Fine Grain	Frosted Zephyr	Upholstery - 3
4046	11	F411	Fine Grain	Deep Indigo	Upholstery - 3
4046	12	F412	Fine Grain	Fathom Blue	Upholstery - 3
4046	13	F413	Fine Grain	Sea Weed	Upholstery - 3
4046	14	F414	Fine Grain	Matcha Leaves	Upholstery - 3
4046	15	F415	Fine Grain	French Beige	Upholstery - 3
4046	16	F416	Fine Grain	Ginger Snap	Upholstery - 3
4046	17	F417	Fine Grain	Martian Soil	Upholstery - 3
4046	18	F418	Fine Grain	Madder Root	Upholstery - 3
4046	19	F419	Fine Grain	Garnet Sand	Upholstery - 3
4046	20	F420	Fine Grain	Iron Oxide	Upholstery - 3
4046	21	F421	Fine Grain	Peat Moss	Upholstery - 3
4048	01	LP11 (P) - LM12 (U/A)	Intone	Ash	Panel - 3, Upholstery 2, Architectural 2
4048	02	LP12 (P) - LM13 (U/A)	Intone	Creme	Panel - 3, Upholstery 2, Architectural 2
4048	03	LP13 (P) - LM14 (U/A)	Intone	Harbor	Panel - 3, Upholstery 2, Architectural 2
4048	04	LP14 (P) - LM15 (U/A)	Intone	Quicksilver	Panel - 3, Upholstery 2, Architectural 2
4048	05	LP15 (P) - LM16 (U/A)	Intone	Caraway	Panel - 3, Upholstery 2, Architectural 2
4048	06	LP16 (P) - LM17 (U/A)	Intone	Oxide	Panel - 3, Upholstery 2, Architectural 2
4048	07	LP17 (P) - LM18 (U/A)	Intone	Cinder	Panel - 3, Upholstery 2, Architectural 2
4048	08	LP18 (P) - LM19 (U/A)	Intone	Lute	Panel - 3, Upholstery 2, Architectural 2
4048	09	LP19 (P) - LM20 (U/A)	Intone	Pome	Panel - 3, Upholstery 2, Architectural 2
4048	10	LP20 (P) - LM21 (U/A)	Intone	Eclipse	Panel - 3, Upholstery 2, Architectural 2
4049	01	C237	Outpress	Ashen	Upholstery - 6
4049	02	C238	Outpress	Sand	Upholstery - 6
4049	03	C239	Outpress	Stone	Upholstery - 6
4049	04	C240	Outpress	Soot	Upholstery - 6
4049	05	C241	Outpress	Raven	Upholstery - 6
4049	06	C242	Outpress	Pepper	Upholstery - 6
4049	07	C243	Outpress	Monarch	Upholstery - 6
4049	08	C244	Outpress	Caribbean	Upholstery - 6
4049	09	C245	Outpress	Denim	Upholstery - 6
4051	01	K106	Amalgam	Aura	Upholstery - 6
4051	02	K107	Amalgam	Pyrite	Upholstery - 6
4051	03	K108	Amalgam	Medallion	Upholstery - 6
4051	04	K109	Amalgam	Fluid	Upholstery - 6
4051	05	K110	Amalgam	Ultraviolet	Upholstery - 6
4051	06	K111	Amalgam	Jolt	Upholstery - 6
4051	07	K112	Amalgam	Nitro	Upholstery - 6
4051	08	K113	Amalgam	Magma	Upholstery - 6
4051	09	K114	Amalgam	Fuse	Upholstery - 6
4052	01	N300	Navigate	Florescent	Upholstery - 16
4052	02	N301	Navigate	Pumice	Upholstery - 16
4052	03	N302	Navigate	Interlace Camel	Upholstery - 16
4052	04	N303	Navigate	Reticulated Stone	Upholstery - 16
4052	05	N304	Navigate	Network Orange	Upholstery - 16

Teknion Color Code Identifier (P) - Panel (U) - Upholstery (A) - Architectural

textile listings by pattern number

FABRIC PATTERN	COLOR CODE	TEKNION COLOR CODE	PATTERN NAME	COLOR NAME	APPLICATION GRADE
4053	01	G106	Monotex	Silver Lane	Upholstery - 5
4053	02	G107	Monotex	Sharkskin	Upholstery - 5
4053	03	G108	Monotex	Grey Flannel	Upholstery - 5
4053	04	G109	Monotex	Grey Marl	Upholstery - 5
4053	05	G110	Monotex	Tarpaper	Upholstery - 5
4053	06	G111	Monotex	Ferrous	Upholstery - 5
4053	07	G112	Monotex	Bark Cloth	Upholstery - 5
4053	08	G113	Monotex	Burlap	Upholstery - 5
4053	09	G114	Monotex	Sumac	Upholstery - 5
4053	10	G115	Monotex	Redroot	Upholstery - 5
4053	11	G116	Monotex	Tyrian	Upholstery - 5
4053	12	G117	Monotex	Annatto	Upholstery - 5
4053	13	G118	Monotex	Jean	Upholstery - 5
4053	14	G119	Monotex	Kingfisher	Upholstery - 5
4053	15	G120	Monotex	Oxalis	Upholstery - 5
4053	16	G121	Monotex	Sulfur	Upholstery - 5
4057	01	M172	Modulus	Plinth	Upholstery - 4
4057	02	M173	Modulus	Landscape	Upholstery - 4
4057	03	M174	Modulus	Masonry	Upholstery - 4
4057	04	M175	Modulus	Superstructer	Upholstery - 4
4057	05	M176	Modulus	Skylight	Upholstery - 4
4057	06	M177	Modulus	Site	Upholstery - 4
4057	07	M178	Modulus	Form	Upholstery - 4
4057	08	M179	Modulus	Shadow Play	Upholstery - 4
4057	09	M180	Modulus	Rebar	Upholstery - 4
4057	10	M181	Modulus	Spatial	Upholstery - 4
4057	11	M182	Modulus	Threshold	Upholstery - 4
4057	12	M183	Modulus	Monument	Upholstery - 4
4058	01	B130 (P) - D310 (U/A) -	Digi Tweed	Dust Tweed	Panel - 2, Upholstery - 2, Architectural - 2
4058	02	B131 (P) - D311 (U/A) -	Digi Tweed	Topaz Tweed	Panel - 2, Upholstery - 2, Architectural - 2
4058	03	B132 (P) - D312 (U/A)	Digi Tweed	Oat Tweed	Panel - 2, Upholstery - 2, Architectural - 2
4058	04	B133 (P) - D313 (U/A)	Digi Tweed	Flax Tweed	Panel - 2, Upholstery - 2, Architectural - 2
4058	05	B134 (P) - D314 (U/A)	Digi Tweed	Silt Tweed	Panel - 2, Upholstery - 2, Architectural - 2
4058	06	B135 (P) - D315 (U/A)	Digi Tweed	Loam Tweed	Panel - 2, Upholstery - 2, Architectural - 2
4058	07	B136 (P) - D316 (U/A)	Digi Tweed	Crag Tweed	Panel - 2, Upholstery - 2, Architectural - 2
4058	08	B137 (P) - D317 (U/A)	Digi Tweed	Basalt Tweed	Panel - 2, Upholstery - 2, Architectural - 2
4058	09	B138 (P) - D318 (U/A)	Digi Tweed	Loden Tweed	Panel - 2, Upholstery - 2, Architectural - 2
4058	10	B139 (P) - D319 (U/A)	Digi Tweed	Sagebrush Tweed	Panel - 2, Upholstery - 2, Architectural - 2
4058	11	B140 (P) - D320 (U/A)	Digi Tweed	Meadow Tweed	Panel - 2, Upholstery - 2, Architectural - 2
4058	12	B141 (P) - D321 (U/A)	Digi Tweed	Sundew Tweed	Panel - 2, Upholstery - 2, Architectural - 2
4058	13	B142 (P) - D322 (U/A)	Digi Tweed	Rose Tweed	Panel - 2, Upholstery - 2, Architectural - 2
4058	14	B143 (P) - D323 (U/A)	Digi Tweed	Raspite Tweed	Panel - 2, Upholstery - 2, Architectural - 2
4058	15	B144 (P) - D324 (U/A)	Digi Tweed	Madder Tweed	Panel - 2, Upholstery - 2, Architectural - 2
4058	16	B145 (P) - D325 (U/A)	Digi Tweed	Beetroot Tweed	Panel - 2, Upholstery - 2, Architectural - 2
4058	17	B146 (P) - D326 (U/A)	Digi Tweed	Thistle Tweed	Panel - 2, Upholstery - 2, Architectural - 2
4058	18	B147 (P) - D327 (U/A)	Digi Tweed	Lav Tweed	Panel - 2, Upholstery - 2, Architectural - 2
4058	19	B148 (P) - D328 (U/A)	Digi Tweed	Clear Tweed	Panel - 2, Upholstery - 2, Architectural - 2
4058	20	B149 (P) - D329 (U/A)	Digi Tweed	Loch Tweed	Panel - 2, Upholstery - 2, Architectural - 2
4058	21	B150 (P) - D330 (U/A)	Digi Tweed	Ocean Tweed	Panel - 2, Upholstery - 2, Architectural - 2
4058	22	B151 (P) - D331 (U/A)	Digi Tweed	North Sea Tweed	Panel - 2, Upholstery - 2, Architectural - 2
4058	23	B152 (P) - D332 (U/A)	Digi Tweed	Onyx Tweed	Panel - 2, Upholstery - 2, Architectural - 2
4058	24	B153 (P) - D333 (U/A)	Digi Tweed	Obsidian Tweed	Panel - 2, Upholstery - 2, Architectural - 2

Teknion Color Code Identifier (P) - Panel (U) - Upholstery (A) - Architectural

textile listings by pattern number

FABRIC PATTERN	COLOR CODE	TEKNION COLOR CODE	PATTERN NAME	COLOR NAME	APPLICATION GRADE
4059	01	R240 (P) - T162 (U/A)	Heather Tech	Dust Tech	Panel - 1, Upholstery - 1, Architectural - 2
4059	02	R241 (P) - T163 (U/A)	Heather Tech	Topaz Tech	Panel - 1, Upholstery - 1, Architectural - 2
4059	03	R242 (P) - T164 (U/A)	Heather Tech	Oat Tech	Panel - 1, Upholstery - 1, Architectural - 2
4059	04	R243 (P) - T165 (U/A)	Heather Tech	Flax Tech	Panel - 1, Upholstery - 1, Architectural - 2
4059	05	R244 (P) - T166 (U/A)	Heather Tech	Silt Tweed	Panel - 1, Upholstery - 1, Architectural - 2
4059	06	R245 (P) - T167 (U/A)	Heather Tech	Loam Tweed	Panel - 1, Upholstery - 1, Architectural - 2
4059	07	R246 (P) - T168 (U/A)	Heather Tech	Crag Tech	Panel - 1, Upholstery - 1, Architectural - 2
4059	08	R247 (P) - T169 (U/A)	Heather Tech	Basalt Tech	Panel - 1, Upholstery - 1, Architectural - 2
4059	09	R248 (P) - T170 (U/A)	Heather Tech	Loden Tech	Panel - 1, Upholstery - 1, Architectural - 2
4059	10	R249 (P) - T171 (U/A)	Heather Tech	Sagebrush Tech	Panel - 1, Upholstery - 1, Architectural - 2
4059	11	R250 (P) - T172 (U/A)	Heather Tech	Meadow Tech	Panel - 1, Upholstery - 1, Architectural - 2
4059	12	R251 (P) - T173 (U/A)	Heather Tech	Sundew Tech	Panel - 1, Upholstery - 1, Architectural - 2
4059	13	R252 (P) - T174 (U/A)	Heather Tech	Rose Tech	Panel - 1, Upholstery - 1, Architectural - 2
4059	14	R253 (P) - T175 (U/A)	Heather Tech	Raspite Tech	Panel - 1, Upholstery - 1, Architectural - 2
4059	15	R254 (P) - T176 (U/A)	Heather Tech	Madder Tech	Panel - 1, Upholstery - 1, Architectural - 2
4059	16	R255 (P) - T177 (U/A)	Heather Tech	Beetroot Tech	Panel - 1, Upholstery - 1, Architectural - 2
4059	17	R256 (P) - T178 (U/A)	Heather Tech	Thistle Tech	Panel - 1, Upholstery - 1, Architectural - 2
4059	18	R257 (P) - T179 (U/A)	Heather Tech	Lav Tech	Panel - 1, Upholstery - 1, Architectural - 2
4059	19	R258 (P) - T180 (U/A)	Heather Tech	Clear Tech	Panel - 1, Upholstery - 1, Architectural - 2
4059	20	R259 (P) - T181 (U/A)	Heather Tech	Loch Tech	Panel - 1, Upholstery - 1, Architectural - 2
4059	21	R260 (P) - T182 (U/A)	Heather Tech	Ocean Tech	Panel - 1, Upholstery - 1, Architectural - 2
4059	22	R261 (P) - T183 (U/A)	Heather Tech	North Sea Tech	Panel - 1, Upholstery - 1, Architectural - 2
4059	23	R262 (P) - T184 (U/A)	Heather Tech	Onyx Tech	Panel - 1, Upholstery - 1, Architectural - 2
4059	24	R263 (P) - T185 (U/A)	Heather Tech	Obsidian Tech	Panel - 1, Upholstery - 1, Architectural - 2
4060	01	E100	Equilux	Eventide	Upholstery - 9
4060	02	E101	Equilux	Diamond Dust	Upholstery - 9
4060	03	E102	Equilux	Solstice	Upholstery - 9
4060	04	E103	Equilux	Moonbow	Upholstery - 9
4060	05	E104	Equilux	Corona	Upholstery - 9
4060	06	E105	Equilux	Blue Hour	Upholstery - 9
4060	07	E106	Equilux	Kindle	Upholstery - 9
4060	08	E107	Equilux	Sunspot	Upholstery - 9
4061	01	R307	Interstice	Inkling	Upholstery - 4
4061	03	R309	Interstice	Lacuna	Upholstery - 4
4061	04	R310	Interstice	Whit	Upholstery - 4
4061	05	R311	Interstice	Scintilla	Upholstery - 4
4061	06	R312	Interstice	Fragment	Upholstery - 4
4061	07	R313	Interstice	Atom	Upholstery - 4
4061	08	R314	Interstice	Trace	Upholstery - 4
4061	09	R315	Interstice	Respite	Upholstery - 4
4061	10	R316	Interstice	Vestige	Upholstery - 4
4061	11	R317	Interstice	Interval	Upholstery - 4
4061	12	R318	Interstice	Caesura	Upholstery - 4
4062	01	A135	Arc Angle	Selene	Upholstery - 14
4062	02	A136	Arc Angle	Erebus	Upholstery - 14
4062	03	A137	Arc Angle	Theia	Upholstery - 14
4062	04	A138	Arc Angle	Proteus	Upholstery - 14
4062	05	A139	Arc Angle	Hestia	Upholstery - 14

Teknion Color Code Identifier (P) - Panel (U) - Upholstery (A) - Architectural

textile listings by pattern number

FABRIC PATTERN	COLOR CODE	TEKNION COLOR CODE	PATTERN NAME	COLOR NAME	APPLICATION GRADE
4063	01	M224	Meta Texture	Deep Space	Upholstery - 4
4063	02	M225	Meta Texture	Grey Matter	Upholstery - 4
4063	03	M226	Meta Texture	Pale Shadow	Upholstery - 4
4063	04	M227	Meta Texture	Silver Lining	Upholstery - 4
4063	05	M228	Meta Texture	Hive Mind	Upholstery - 4
4063	06	M229	Meta Texture	Neutral Ground	Upholstery - 4
4063	07	M230	Meta Texture	Grassroots	Upholstery - 4
4063	08	M231	Meta Texture	Jaded	Upholstery - 4
4063	09	M232	Meta Texture	Deep Dive	Upholstery - 4
4063	10	M233	Meta Texture	Blue Skies	Upholstery - 4
4063	11	M234	Meta Texture	Rosy Outlook	Upholstery - 4
4063	12	M235	Meta Texture	Heat Wave	Upholstery - 4
4063	13	M236	Meta Texture	Punchline	Upholstery - 4
4064	01	S442	Superspun	Drawdown	Upholstery - 3
4064	02	S443	Superspun	Denier	Upholstery - 3
4064	03	S444	Superspun	Tensile	Upholstery - 3
4064	04	S445	Superspun	Roving	Upholstery - 3
4064	05	S446	Superspun	Staple	Upholstery - 3
4064	06	S447	Superspun	Spindle	Upholstery - 3
4064	07	S448	Superspun	Harness	Upholstery - 3
4064	08	S449	Superspun	Tenter	Upholstery - 3
4064	09	S450	Superspun	Red Cast	Upholstery - 3
4064	10	S451	Superspun	Selvedge	Upholstery - 3
4064	11	S452	Superspun	Skein	Upholstery - 3
4064	12	S453	Superspun	Bluing	Upholstery - 3
4064	13	S454	Superspun	Treadle	Upholstery - 3
4064	14	S455	Superspun	Sett	Upholstery - 3
4064	15	S456	Superspun	Pirn	Upholstery - 3
4064	16	S457	Superspun	Creel	Upholstery - 3
4065	01	E108	Ephemera	Lucent	Upholstery - 7
4065	02	E109	Ephemera	Afterglow	Upholstery - 7
4065	03	E110	Ephemera	Ice Cloud	Upholstery - 7
4065	04	E111	Ephemera	Halcyon	Upholstery - 7
4065	05	E112	Ephemera	Phosphene	Upholstery - 7
4065	06	E113	Ephemera	Solar Flare	Upholstery - 7
4065	07	E114	Ephemera	Gamma Burst	Upholstery - 7
4065	08	E115	Ephemera	Green Flash	Upholstery - 7
4065	09	E116	Ephemera	Blue Shift	Upholstery - 7
4065	10	E117	Ephemera	Ashfall	Upholstery - 7
4065	11	E118	Ephemera	Nightglow	Upholstery - 7
4065	12	E119	Ephemera	Penumbra	Upholstery - 7
4066	01	R582 (P) - B160 (U)	Bitstream	Tablet	Panel - A, Upholstery - 1
4066	02	R583 (P) - B161 (U)	Bitstream	Hardware	Panel - A, Upholstery - 1
4066	03	R584 (P) - B162 (U)	Bitstream	Trackback	Panel - A, Upholstery - 1
4066	04	R585 (P) - B163 (U)	Bitstream	Lithium	Panel - A, Upholstery - 1
4066	05	R586 (P) - B164 (U)	Bitstream	Grey Code	Panel - A, Upholstery - 1
4066	06	R587 (P) - B165 (U)	Bitstream	Silicone	Panel - A, Upholstery - 1
4066	07	R588 (P) - B166 (U)	Bitstream	White Noise	Panel - A, Upholstery - 1
4066	08	R589 (P) - B167 (U)	Bitstream	Xenon	Panel - A, Upholstery - 1
4066	09	R590 (P) - B168 (U)	Bitstream	Wavelet	Panel - A, Upholstery - 1
4066	10	R591 (P) - B169 (U)	Bitstream	Blue Team	Panel - A, Upholstery - 1
4066	11	R592 (P) - B170 (U)	Bitstream	Firewire	Panel - A, Upholstery - 1
4066	12	R593 (P) - B171 (U)	Bitstream	Flash Drive	Panel - A, Upholstery - 1

Teknion Color Code Identifier (P) - Panel (U) - Upholstery (A) - Architectural

textile listings by pattern number

FABRIC PATTERN	COLOR CODE	TEKNION COLOR CODE	PATTERN NAME	COLOR NAME	APPLICATION GRADE
4067	01	E120	Elastic Wool	Fortress	Upholstery - 4
4067	02	E121	Elastic Wool	Fantom	Upholstery - 4
4067	03	E122	Elastic Wool	Mercury	Upholstery - 4
4067	04	E123	Elastic Wool	Clean	Upholstery - 4
4067	05	E124	Elastic Wool	Seed	Upholstery - 4
4067	06	E125	Elastic Wool	Tea	Upholstery - 4
4067	07	E126	Elastic Wool	Rust	Upholstery - 4
4067	08	E127	Elastic Wool	Ruby	Upholstery - 4
4067	09	E128	Elastic Wool	Ceylon	Upholstery - 4
4067	10	E129	Elastic Wool	Lovelace	Upholstery - 4
4067	11	E130	Elastic Wool	Jovial	Upholstery - 4
4067	12	E131	Elastic Wool	Elm	Upholstery - 4
4067	13	E132	Elastic Wool	Python	Upholstery - 4
4067	14	E133	Elastic Wool	Aegean	Upholstery - 4
4067	15	E134	Elastic Wool	Delphi	Upholstery - 4
4067	16	E135	Elastic Wool	Dart	Upholstery - 4
4069	01	A166	Adage	Script	Upholstery - 5
4069	02	A146	Adage	Anthracite	Upholstery - 5
4069	03	A147	Adage	Carbon Fiber	Upholstery - 5
4069	04	A148	Adage	Splice	Upholstery - 5
4069	05	A149	Adage	Chromite	Upholstery - 5
4069	06	A150	Adage	Singularity	Upholstery - 5
4069	07	A151	Adage	Valence	Upholstery - 5
4069	08	A152	Adage	Halite	Upholstery - 5
4069	09	A153	Adage	Quartzite	Upholstery - 5
4069	10	A154	Adage	Rubelite	Upholstery - 5
4069	11	A155	Adage	Thremite	Upholstery - 5
4069	12	A156	Adage	Orchil	Upholstery - 5
4069	13	A157	Adage	Holograph	Upholstery - 5
4069	14	A158	Adage	Photon	Upholstery - 5
4069	15	A159	Adage	Halogen	Upholstery - 5
4069	16	A160	Adage	Canopy	Upholstery - 5
4069	17	A161	Adage	Raw Jade	Upholstery - 5
4069	18	A162	Adage	Petrol	Upholstery - 5
4069	19	A163	Adage	Diffraction	Upholstery - 5
4069	20	A164	Adage	Amethyst	Upholstery - 5
4069	21	A165	Adage	Pascal	Upholstery - 5
4070	01	C154	Color Fuse	Wax	Upholstery - 10
4070	02	C155	Color Fuse	Emulsion	Upholstery - 10
4070	03	C156	Color Fuse	Jell	Upholstery - 10
4070	04	C157	Color Fuse	Enamel	Upholstery - 10
4070	05	C158	Color Fuse	Liquefy	Upholstery - 10
4070	06	C159	Color Fuse	Freeze	Upholstery - 10
4070	07	C160	Color Fuse	Molten	Upholstery - 10
4070	08	C161	Color Fuse	Solvent	Upholstery - 10
4070	09	C162	Color Fuse	Plasma	Upholstery - 10

Teknion Color Code Identifier (P) - Panel (U) - Upholstery (A) - Architectural

textile listings by pattern number

FABRIC PATTERN	COLOR CODE	TEKNION COLOR CODE	PATTERN NAME	COLOR NAME	APPLICATION GRADE
4073	01	T740 (P) - A209 (U/A)	Actuate	Aqueous	Panel - 2, Upholstery - 2, Architectural - 2
4073	02	T741 (P) - A210 (U/A)	Actuate	Spectral	Panel - 2, Upholstery - 2, Architectural - 2
4073	03	T742 (P) - A211 (U/A)	Actuate	Aether	Panel - 2, Upholstery - 2, Architectural - 2
4073	04	T743 (P) - A212 (U/A)	Actuate	Facet	Panel - 2, Upholstery - 2, Architectural - 2
4073	05	T744 (P) - A213 (U/A)	Actuate	Syntax	Panel - 2, Upholstery - 2, Architectural - 2
4073	06	T745 (P) - A214 (U/A)	Actuate	Vanish	Panel - 2, Upholstery - 2, Architectural - 2
4073	07	T746 (P) - A215 (U/A)	Actuate	Suffuse	Panel - 2, Upholstery - 2, Architectural - 2
4073	08	T747 (P) - A216 (U/A)	Actuate	Mordant	Panel - 2, Upholstery - 2, Architectural - 2
4073	09	T748 (P) - A217 (U/A)	Actuate	Lambent	Panel - 2, Upholstery - 2, Architectural - 2
4073	10	T749 (P) - A218 (U/A)	Actuate	Conscious	Panel - 2, Upholstery - 2, Architectural - 2
4073	11	T750 (P) - A219 (U/A)	Actuate	Fortify	Panel - 2, Upholstery - 2, Architectural - 2
4073	12	T751 (P) - A220 (U/A)	Actuate	Favrile	Panel - 2, Upholstery - 2, Architectural - 2
4073	13	T752 (P) - A221 (U/A)	Actuate	Prelude	Panel - 2, Upholstery - 2, Architectural - 2
4073	14	T753 (P) - A222 (U/A)	Actuate	Meridian	Panel - 2, Upholstery - 2, Architectural - 2
4073	15	T754 (P) - A223 (U/A)	Actuate	Thermal	Panel - 2, Upholstery - 2, Architectural - 2
4073	16	T755 (P) - A224 (U/A)	Actuate	Induction	Panel - 2, Upholstery - 2, Architectural - 2
4075	01	S335	Structured Stripe	Shadow Weave	Upholstery - 7
4075	01	S336	Structured Stripe	Silver Lap	Upholstery - 7
4075	01	S337	Structured Stripe	Countermarche	Upholstery - 7
4075	01	S338	Structured Stripe	Double Beam	Upholstery - 7
4075	01	S339	Structured Stripe	Block Draw	Upholstery - 7
4075	01	S340	Structured Stripe	Box Motion	Upholstery - 7
4075	01	S341	Structured Stripe	Overshot	Upholstery - 7
4075	01	S342	Structured Stripe	Punch Card	Upholstery - 7
4076	01	D130	Duo Chrome	Ebony	Upholstery - 6
4076	02	D131	Duo Chrome	Charcoal	Upholstery - 6
4076	03	D132	Duo Chrome	Black Pepper	Upholstery - 6
4076	04	D133	Duo Chrome	Platinum	Upholstery - 6
4076	05	D134	Duo Chrome	Canvas	Upholstery - 6
4076	06	D135	Duo Chrome	Copper	Upholstery - 6
4076	07	D136	Duo Chrome	Goldenrod	Upholstery - 6
4076	08	D137	Duo Chrome	Citron	Upholstery - 6
4076	09	D138	Duo Chrome	Emerald	Upholstery - 6
4076	10	D139	Duo Chrome	Silver Elm	Upholstery - 6
4076	11	D140	Duo Chrome	Evergreen	Upholstery - 6
4076	12	D141	Duo Chrome	Aquamarine	Upholstery - 6
4076	13	D142	Duo Chrome	Navy	Upholstery - 6
4076	14	D143	Duo Chrome	Iris	Upholstery - 6
4076	15	D144	Duo Chrome	Boysenberry	Upholstery - 6
4076	16	D145	Duo Chrome	Hydrangea	Upholstery - 6
4076	17	D146	Duo Chrome	Dusty Plum	Upholstery - 6
4076	18	D147	Duo Chrome	Oxblood	Upholstery - 6
4076	19	D148	Duo Chrome	Red Oxide	Upholstery - 6
4076	20	D149	Duo Chrome	Persimmon	Upholstery - 6
4077	01	V520	Oeuvre	Blithe	Upholstery - 7
4077	02	V521	Oeuvre	Salient	Upholstery - 7
4077	03	V522	Oeuvre	Austere	Upholstery - 7
4077	04	V523	Oeuvre	Earnest	Upholstery - 7
4077	05	V524	Oeuvre	Ardent	Upholstery - 7
4077	06	V525	Oeuvre	Fervor	Upholstery - 7
4077	07	V526	Oeuvre	Finesse	Upholstery - 7
4077	08	V527	Oeuvre	Mettle	Upholstery - 7
4077	09	V528	Oeuvre	Flourish	Upholstery - 7
4077	10	V529	Oeuvre	Charm	Upholstery - 7
4077	11	V530	Oeuvre	Deft	Upholstery - 7
4077	12	V531	Oeuvre	Crest	Upholstery - 7

Teknion Color Code Identifier (P) - Panel (U) - Upholstery (A) - Architectural

textile listings by pattern number

FABRIC PATTERN	COLOR CODE	TEKNION COLOR CODE	PATTERN NAME	COLOR NAME	APPLICATION GRADE
4078	01	Y100	Doyenne	Woodbrick	Upholstery - 3
4078	02	Y101	Doyenne	Sepia Tone	Upholstery - 3
4078	03	Y102	Doyenne	Intaglio	Upholstery - 3
4078	04	Y103	Doyenne	Grisailles	Upholstery - 3
4078	05	Y104	Doyenne	Aquamedia	Upholstery - 3
4078	06	Y105	Doyenne	Watermark	Upholstery - 3
4078	07	Y106	Doyenne	Verdigris	Upholstery - 3
4078	08	Y107	Doyenne	Phthalo	Upholstery - 3
4078	09	Y108	Doyenne	Terre Verte	Upholstery - 3
4078	10	Y109	Doyenne	Copperplate	Upholstery - 3
4078	11	Y110	Doyenne	Sienna	Upholstery - 3
4078	12	Y111	Doyenne	Alizarin	Upholstery - 3
4079	01	C511	Construct	Fawn	Upholstery - 8
4079	02	C512	Construct	Clay	Upholstery - 8
4079	03	C513	Construct	Brandy	Upholstery - 8
4079	04	C514	Construct	Vermilion	Upholstery - 8
4079	05	C515	Construct	Cadmium Orange	Upholstery - 8
4079	06	C516	Construct	Zinnia	Upholstery - 8
4079	07	C517	Construct	Auburn	Upholstery - 8
4079	08	C518	Construct	Wisteria	Upholstery - 8
4079	09	C519	Construct	Ultramarine	Upholstery - 8
4079	10	C520	Construct	Cornflower	Upholstery - 8
4079	11	C521	Construct	Pacific	Upholstery - 8
4079	12	C522	Construct	Celadon	Upholstery - 8
4079	13	C523	Construct	Canary	Upholstery - 8
4079	14	C524	Construct	Turmeric	Upholstery - 8
4079	15	C525	Construct	Ochre	Upholstery - 8
4079	16	C526	Construct	Beryl	Upholstery - 8
4079	17	C527	Construct	Viridian	Upholstery - 8
4079	18	C528	Construct	Fir	Upholstery - 8
4079	19	C529	Construct	Midnight	Upholstery - 8
4079	20	C530	Construct	Argent	Upholstery - 8
4079	21	C531	Construct	Gunmetal	Upholstery - 8
4079	22	C532	Construct	Noir	Upholstery - 8
4080	01	S426	Second Nature	Moonflower	Upholstery - 16
4080	02	S427	Second Nature	Muscadine	Upholstery - 16
4080	03	S428	Second Nature	Chaparral	Upholstery - 16
4080	04	S429	Second Nature	Bougainvillea	Upholstery - 16
4080	05	S430	Second Nature	Nightshade	Upholstery - 16
4080	06	S431	Second Nature	Peppervine	Upholstery - 16
4081	01	F480	Flex Wool	Rebound	Upholstery - 7
4081	02	F481	Flex Wool	Tempo	Upholstery - 7
4081	03	F482	Flex Wool	Dynamo	Upholstery - 7
4081	04	F483	Flex Wool	Vim	Upholstery - 7
4081	05	F484	Flex Wool	Spark	Upholstery - 7
4081	06	F485	Flex Wool	Thrive	Upholstery - 7
4081	07	F486	Flex Wool	Arena	Upholstery - 7
4081	08	F487	Flex Wool	Agile	Upholstery - 7
4081	09	F488	Flex Wool	Buoyant	Upholstery - 7
4081	10	F489	Flex Wool	Torque	Upholstery - 7
4081	11	F490	Flex Wool	Raceway	Upholstery - 7
4081	12	F491	Flex Wool	Blur	Upholstery - 7

Teknion Color Code Identifier (P) - Panel (U) - Upholstery (A) - Architectural

textile listings by pattern number

FABRIC PATTERN	COLOR CODE	TEKNION COLOR CODE	PATTERN NAME	COLOR NAME	APPLICATION GRADE
4082	01	V221	Vector	Dovetail	Upholstery - 6
4082	02	V222	Vector	Horizon Line	Upholstery - 6
4082	03	V223	Vector	Tessera	Upholstery - 6
4082	04	V224	Vector	Latitude	Upholstery - 6
4082	05	V225	Vector	Vertex	Upholstery - 6
4082	06	V226	Vector	Radial	Upholstery - 6
4082	07	V227	Vector	Hypercube	Upholstery - 6
4082	08	V228	Vector	Scalar	Upholstery - 6
4082	09	V229	Vector	Parallax	Upholstery - 6
4083	01	T418	Top Coat	Shell	Upholstery - 9
4083	02	T419	Top Coat	Glaze	Upholstery - 9
4083	03	T420	Top Coat	Chromate	Upholstery - 9
4083	04	T421	Top Coat	Stoneware	Upholstery - 9
4083	05	T422	Top Coat	Aniline	Upholstery - 9
4083	06	T423	Top Coat	Braze	Upholstery - 9
4083	07	T424	Top Coat	Conduct	Upholstery - 9
4083	08	T425	Top Coat	Heat Set	Upholstery - 9
4083	09	T426	Top Coat	Claycast	Upholstery - 9
4083	10	T427	Top Coat	Toast	Upholstery - 9
4083	11	T428	Top Coat	Polish	Upholstery - 9
4083	12	T429	Top Coat	Frit	Upholstery - 9
4083	13	T430	Top Coat	Shellac	Upholstery - 9
4083	14	T431	Top Coat	Dip	Upholstery - 9
4083	15	T432	Top Coat	Indigo Ink	Upholstery - 9
4083	16	T433	Top Coat	Seal	Upholstery - 9
4083	17	T434	Top Coat	Weld	Upholstery - 9
4083	18	T435	Top Coat	Black Oxide	Upholstery - 9
4084	01	M191	Fleece	Alum	Upholstery - 10
4084	02	M192	Fleece	Aer	Upholstery - 10
4084	03	M193	Fleece	Linseed	Upholstery - 10
4084	04	M194	Fleece	Rubedo	Upholstery - 10
4084	05	M195	Fleece	Ignis	Upholstery - 10
4084	06	M196	Fleece	Cypher	Upholstery - 10
4084	07	M197	Fleece	Balsam	Upholstery - 10
4084	08	M198	Fleece	Glyph	Upholstery - 10
4084	09	M199	Fleece	Nero	Upholstery - 10
4086	01	F422	Mitered	Black Walnut	Upholstery - 16
4086	02	F423	Mitered	White Birch	Upholstery - 16
4086	03	F424	Mitered	Golden Oak	Upholstery - 16
4086	04	F425	Mitered	Redwood	Upholstery - 16
4086	05	F426	Mitered	Blue Spruce	Upholstery - 16
4086	06	F427	Mitered	Sapling	Upholstery - 16

Teknion Color Code Identifier (P) - Panel (U) - Upholstery (A) - Architectural

textile listings by pattern number

FABRIC PATTERN	COLOR CODE	TEKNION COLOR CODE	PATTERN NAME	COLOR NAME	APPLICATION GRADE
4087	01	D150	Decoy	Double Bluff	Upholstery - 2
4087	02	D151	Decoy	Sheep's Clothing	Upholstery - 2
4087	03	D152	Decoy	Trick Mirror	Upholstery - 2
4087	04	D153	Decoy	Ditto	Upholstery - 2
4087	05	D154	Decoy	Proxy	Upholstery - 2
4087	06	D155	Decoy	Façade	Upholstery - 2
4087	07	D156	Decoy	Rook	Upholstery - 2
4087	08	D157	Decoy	Copycat	Upholstery - 2
4087	09	D158	Decoy	Incognito	Upholstery - 2
4087	10	D159	Decoy	Pipe Dream	Upholstery - 2
4087	11	D160	Decoy	Trip Wire	Upholstery - 2
4087	12	D161	Decoy	Feign	Upholstery - 2
4087	13	D162	Decoy	Atlantis	Upholstery - 2
4087	14	D163	Decoy	Mirage	Upholstery - 2
4087	15	D164	Decoy	Reverie	Upholstery - 2
4087	16	D165	Decoy	Lure	Upholstery - 2
4087	17	D166	Decoy	Cloak	Upholstery - 2
4087	18	D167	Decoy	Mystify	Upholstery - 2
4087	19	D168	Decoy	Figment	Upholstery - 2
4087	20	D169	Decoy	Ruse	Upholstery - 2
4087	21	D170	Decoy	Red Handed	Upholstery - 2
4087	22	D171	Decoy	Clandestine	Upholstery - 2
4087	23	D172	Decoy	Cahoots	Upholstery - 2
4087	24	D173	Decoy	Synonym	Upholstery - 2
4087	25	D174	Decoy	Mimic	Upholstery - 2
4087	26	D175	Decoy	Retort	Upholstery - 2
4087	27	D176	Decoy	Masquerade	Upholstery - 2
4087	28	D177	Decoy	Lookalike	Upholstery - 2
4087	29	D178	Decoy	Eavesdrop	Upholstery - 2
4087	30	D179	Decoy	Lark	Upholstery - 2
4087	31	D180	Decoy	Stand In	Upholstery - 2
4087	32	D181	Decoy	Encore	Upholstery - 2
4087	33	D182	Decoy	Sweet Talk	Upholstery - 2
4087	34	D183	Decoy	Pretense	Upholstery - 2
4087	35	D184	Decoy	Fool's Gold	Upholstery - 2
4087	36	D185	Decoy	Monkey Business	Upholstery - 2
4087	37	D186	Decoy	Alias	Upholstery - 2
4087	38	D187	Decoy	Crocodile Tears	Upholstery - 2
4087	39	D188	Decoy	Parrot	Upholstery - 2
4087	40	D189	Decoy	Face Value	Upholstery - 2
4087	41	D190	Decoy	Garden Path	Upholstery - 2
4087	42	D191	Decoy	Espionage	Upholstery - 2
4087	43	D192	Decoy	Emulate	Upholstery - 2
4087	44	D193	Decoy	Replay	Upholstery - 2
4087	45	D194	Decoy	Parallel	Upholstery - 2
4087	46	D195	Decoy	Mare's Nest	Upholstery - 2
4088	01	S257	Scale Factor	Basis	Upholstery - 14
4088	02	S258	Scale Factor	Compound	Upholstery - 14
4088	03	S259	Scale Factor	Tangent	Upholstery - 14
4088	04	S260	Scale Factor	Tensor	Upholstery - 14
4088	05	S261	Scale Factor	Matrix	Upholstery - 14

Teknion Color Code Identifier (P) - Panel (U) - Upholstery (A) - Architectural

textile listings by pattern number

FABRIC PATTERN	COLOR CODE	TEKNION COLOR CODE	PATTERN NAME	COLOR NAME	APPLICATION GRADE
4089	01	C163	Crossgrain	Underbrush	Panel - 2, Upholstery - 2
4089	02	C164	Crossgrain	Dado	Panel - 2, Upholstery - 2
4089	03	C165	Crossgrain	Blackwood	Panel - 2, Upholstery - 2
4089	04	C166	Crossgrain	Cove	Panel - 2, Upholstery - 2
4089	05	C167	Crossgrain	Xylem	Panel - 2, Upholstery - 2
4089	06	C168	Crossgrain	Tenon	Panel - 2, Upholstery - 2
4089	07	C169	Crossgrain	Amaranth	Panel - 2, Upholstery - 2
4089	08	C170	Crossgrain	Red Oak	Panel - 2, Upholstery - 2
4089	09	C171	Crossgrain	Tuliptree	Panel - 2, Upholstery - 2
4089	10	C172	Crossgrain	Iroko	Panel - 2, Upholstery - 2
4089	11	C173	Crossgrain	Ginkgo	Panel - 2, Upholstery - 2
4089	12	C174	Crossgrain	Burl	Panel - 2, Upholstery - 2
4089	13	C175	Crossgrain	Cypress	Panel - 2, Upholstery - 2
4089	14	C176	Crossgrain	Springwood	Panel - 2, Upholstery - 2
4089	15	C177	Crossgrain	Driftwood	Panel - 2, Upholstery - 2
4090	01	4090	Grid State	Arc Flash	Upholstery - 4, Architectural - 3
4090	02	4090	Grid State	Open Circuit	Upholstery - 4, Architectural - 3
4090	03	4090	Grid State	Volt Switch	Upholstery - 4, Architectural - 3
4090	04	4090	Grid State	Hydropower	Upholstery - 4, Architectural - 3
4090	05	4090	Grid State	Switchboard	Upholstery - 4, Architectural - 3
4090	06	4090	Grid State	Megawatt	Upholstery - 4, Architectural - 3
4090	07	4090	Grid State	Circuit Break	Upholstery - 4, Architectural - 3
4090	08	4090	Grid State	Electrode	Upholstery - 4, Architectural - 3
4090	09	4090	Grid State	Live Wire	Upholstery - 4, Architectural - 3
4090	10	4090	Grid State	Turbine	Upholstery - 4, Architectural - 3
4090	11	4090	Grid State	Neon Bulb	Upholstery - 4, Architectural - 3
4090	12	4090	Grid State	Wolfram	Upholstery - 4, Architectural - 3
4092	01	R285 (P) - E136 (U/A)	Ecotone	Abyss	Panel - 5, Upholstery - 3, Architectural - 5
4092	02	R286 (P) - E137 (U/A)	Ecotone	Ravine	Panel - 5, Upholstery - 3, Architectural - 5
4092	03	R287 (P) - E138 (U/A)	Ecotone	Rocky Shore	Panel - 5, Upholstery - 3, Architectural - 5
4092	04	R288 (P) - E139 (U/A)	Ecotone	Permafrost	Panel - 5, Upholstery - 3, Architectural - 5
4092	05	R289 (P) - E140 (U/A)	Ecotone	Tundra	Panel - 5, Upholstery - 3, Architectural - 5
4092	06	R290 (P) - E141 (U/A)	Ecotone	Arid	Panel - 5, Upholstery - 3, Architectural - 5
4092	07	R291 (P) - E142 (U/A)	Ecotone	Savanna	Panel - 5, Upholstery - 3, Architectural - 5
4092	08	R292 (P) - E143 (U/A)	Ecotone	Desert Bloom	Panel - 5, Upholstery - 3, Architectural - 5
4092	09	R293 (P) - E144 (U/A)	Ecotone	Badlands	Panel - 5, Upholstery - 3, Architectural - 5
4092	10	R294 (P) - E145 (U/A)	Ecotone	Caldera	Panel - 5, Upholstery - 3, Architectural - 5
4092	11	R295 (P) - E146 (U/A)	Ecotone	Freshwater	Panel - 5, Upholstery - 3, Architectural - 5
4092	12	R296 (P) - E147 (U/A)	Ecotone	Intertidal	Panel - 5, Upholstery - 3, Architectural - 5
4092	13	R297 (P) - E148 (U/A)	Ecotone	Rain Shadow	Panel - 5, Upholstery - 3, Architectural - 5
4092	14	R298 (P) - E149 (U/A)	Ecotone	Lichen	Panel - 5, Upholstery - 3, Architectural - 5
4092	15	R299 (P) - E150 (U/A)	Ecotone	Mangrove	Panel - 5, Upholstery - 3, Architectural - 5
4092	16	R300 (P) - E151 (U/A)	Ecotone	Treeline	Panel - 5, Upholstery - 3, Architectural - 5

Teknion Color Code Identifier (P) - Panel (U) - Upholstery (A) - Architectural

textile listings by pattern number

FABRIC PATTERN	COLOR CODE	TEKNION COLOR CODE	PATTERN NAME	COLOR NAME	APPLICATION GRADE
4093	01	H616	Haptic	Cliffline	Upholstery - 6
4093	02	H617	Haptic	Gravel	Upholstery - 6
4093	03	H618	Haptic	Alluvium	Upholstery - 6
4093	04	H619	Haptic	Sediment	Upholstery - 6
4093	05	H620	Haptic	Pink Salt	Upholstery - 6
4093	06	H621	Haptic	Montane	Upholstery - 6
4093	07	H622	Haptic	Butte	Upholstery - 6
4093	08	H623	Haptic	Arroyo	Upholstery - 6
4093	09	H624	Haptic	Superbloom	Upholstery - 6
4093	10	H625	Haptic	Mantle	Upholstery - 6
4093	11	H626	Haptic	Geode	Upholstery - 6
4093	12	H627	Haptic	Flood Plain	Upholstery - 6
4093	13	H628	Haptic	Isthmus	Upholstery - 6
4093	14	H629	Haptic	Aquifer	Upholstery - 6
4093	15	H630	Haptic	Delta	Upholstery - 6
4093	16	H631	Haptic	Fjord	Upholstery - 6
4094	01	P160	Photogram	Shadowgraph	Upholstery - 6
4094	02	P161	Photogram	Toner	Upholstery - 6
4094	03	P162	Photogram	Silver Salts	Upholstery - 6
4094	04	P163	Photogram	Light Meter	Upholstery - 6
4094	05	P164	Photogram	Sunprint	Upholstery - 6
4094	06	P165	Photogram	Heliograph	Upholstery - 6
4094	07	P166	Photogram	Safelight	Upholstery - 6
4094	08	P167	Photogram	Cyanotype	Upholstery - 6
4094	09	P168	Photogram	Mezzotint	Upholstery - 6
4094	10	P169	Photogram	Darkroom	Upholstery - 6
4096	01	R325 (P) - T278 (A)	Twisted Tweed	Wrought Iron	Panel - 4, Upholstery - 3, Architectural - 3
4096	02	R326 (P) - T279 (A)	Twisted Tweed	Rock Garden	Panel - 4, Upholstery - 3, Architectural - 3
4096	03	R327 (P) - T280 (A)	Twisted Tweed	Shady Patch	Panel - 4, Upholstery - 3, Architectural - 3
4096	04	R328 (P) - T281 (A)	Twisted Tweed	Moongate	Panel - 4, Upholstery - 3, Architectural - 3
4096	05	R329 (P) - T282 (A)	Twisted Tweed	Plaster	Panel - 4, Upholstery - 3, Architectural - 3
4096	06	R330 (P) - T283 (A)	Twisted Tweed	Stucco	Panel - 4, Upholstery - 3, Architectural - 3
4096	07	R331 (P) - T284 (A)	Twisted Tweed	Thatch	Panel - 4, Upholstery - 3, Architectural - 3
4096	08	R332 (P) - T285 (A)	Twisted Tweed	Arbor	Panel - 4, Upholstery - 3, Architectural - 3
4096	09	R333 (P) - T286 (A)	Twisted Tweed	Daylight	Panel - 4, Upholstery - 3, Architectural - 3
4096	10	R334 (P) - T287 (A)	Twisted Tweed	Sundial	Panel - 4, Upholstery - 3, Architectural - 3
4096	11	R335 (P) - T288 (A)	Twisted Tweed	Koi Pond	Panel - 4, Upholstery - 3, Architectural - 3
4096	12	R336 (P) - T289 (A)	Twisted Tweed	Brickwork	Panel - 4, Upholstery - 3, Architectural - 3
4096	13	R337 (P) - T290 (A)	Twisted Tweed	Annual	Panel - 4, Upholstery - 3, Architectural - 3
4096	14	R338 (P) - T291 (A)	Twisted Tweed	Perennial	Panel - 4, Upholstery - 3, Architectural - 3
4096	15	R339 (P) - T292 (A)	Twisted Tweed	Rain Chain	Panel - 4, Upholstery - 3, Architectural - 3
4096	16	R340 (P) - T293 (A)	Twisted Tweed	Open Air	Panel - 4, Upholstery - 3, Architectural - 3
4096	17	R341 (P) - T294 (A)	Twisted Tweed	Water Feature	Panel - 4, Upholstery - 3, Architectural - 3
4096	18	R342 (P) - T295 (A)	Twisted Tweed	Terrace	Panel - 4, Upholstery - 3, Architectural - 3
4096	19	R343 (P) - T296 (A)	Twisted Tweed	Veranda	Panel - 4, Upholstery - 3, Architectural - 3
4091	01	W480	Wavefield	Tideline	Upholstery - 8
4091	02	W481	Wavefield	Groundwater	Upholstery - 8
4091	03	W482	Wavefield	Red Tide	Upholstery - 8
4091	04	W483	Wavefield	Aspen Reflection	Upholstery - 8
4091	05	W484	Wavefield	Rivulet	Upholstery - 8
4091	06	W485	Wavefield	Cascade	Upholstery - 8
4091	07	W486	Wavefield	Sea Level	Upholstery - 8
4091	08	W487	Wavefield	Brackish	Upholstery - 8
4091	09	W488	Wavefield	Wake Zone	Upholstery - 8

Teknion Color Code Identifier (P) - Panel (U) - Upholstery (A) - Architectural

textile listings by pattern number

FABRIC PATTERN	COLOR CODE	TEKNION COLOR CODE	PATTERN NAME	COLOR NAME	APPLICATION GRADE
4095	01	W209	Welded	Alliance	Upholstery - 8
4095	02	W210	Welded	Charcoal Flux	Upholstery - 8
4095	03	W211	Welded	Bond	Upholstery - 8
4095	04	W212	Welded	Soda Ash	Upholstery - 8
4095	05	W213	Welded	Palladium	Upholstery - 8
4095	06	W214	Welded	Brass Alloy	Upholstery - 8
4095	07	W215	Welded	Rose Torch	Upholstery - 8
4095	08	W216	Welded	Copper Foil	Upholstery - 8
4095	09	W217	Welded	Mingle	Upholstery - 8
4095	10	W218	Welded	Synergy	Upholstery - 8
4095	11	W219	Welded	Synthesis	Upholstery - 8
4098	01	T440	Tilt Shift Redux	Elevation	Upholstery - 7
4098	02	T441	Tilt Shift Redux	Plexus	Upholstery - 7
4098	03	T442	Tilt Shift Redux	Baseline	Upholstery - 7
4098	04	T443	Tilt Shift Redux	Beta	Upholstery - 7
4098	05	T444	Tilt Shift Redux	Fluctuate	Upholstery - 7
4098	06	T445	Tilt Shift Redux	Alpha	Upholstery - 7
4098	07	T446	Tilt Shift Redux	Amplifier	Upholstery - 7
4098	08	T447	Tilt Shift Redux	Sensor	Upholstery - 7
4098	09	T448	Tilt Shift Redux	Bandwidth	Upholstery - 7
4098	10	T449	Tilt Shift Redux	Synapse	Upholstery - 7
4098	11	T450	Tilt Shift Redux	Sonar	Upholstery - 7
4098	12	T451	Tilt Shift Redux	Modulate	Upholstery - 7
4099	01	W128	Wool Fleck	Boulder	Upholstery - 7
4099	02	W129	Wool Fleck	Packstone	Upholstery - 7
4099	03	W130	Wool Fleck	Zinc	Upholstery - 7
4099	04	W131	Wool Fleck	Micrite	Upholstery - 7
4099	05	W132	Wool Fleck	Coquina	Upholstery - 7
4099	06	W133	Wool Fleck	Beachrock	Upholstery - 7
4099	07	W134	Wool Fleck	Tawny	Upholstery - 7
4099	08	W135	Wool Fleck	Corten	Upholstery - 7
4099	09	W136	Wool Fleck	Pink Nacre	Upholstery - 7
4099	10	W137	Wool Fleck	Birchbark	Upholstery - 7
4099	11	W138	Wool Fleck	Firesand	Upholstery - 7
4099	12	W139	Wool Fleck	Chamotte	Upholstery - 7
4099	13	W140	Wool Fleck	Blackberry	Upholstery - 7
4099	14	W141	Wool Fleck	Mussel Dust	Upholstery - 7
4099	15	W142	Wool Fleck	Gitti	Upholstery - 7
4099	16	W143	Wool Fleck	Iolite	Upholstery - 7
4099	17	W144	Wool Fleck	Storm Petrel	Upholstery - 7
4099	18	W145	Wool Fleck	Bittercress	Upholstery - 7
4099	19	W146	Wool Fleck	Oat Grass	Upholstery - 7
4099	20	W147	Wool Fleck	Aloe	Upholstery - 7
4099	21	W148	Wool Fleck	Wild Mustard	Upholstery - 7
4100	01	M534	Melange Check	Cobblestone	Upholstery - 9
4100	02	M535	Melange Check	Bisque	Upholstery - 9
4100	03	M536	Melange Check	Soda Fired	Upholstery - 9
4100	04	M537	Melange Check	Goldspeck	Upholstery - 9
4100	05	M538	Melange Check	Pink Kaolin	Upholstery - 9
4100	06	M539	Melange Check	Brick Dust	Upholstery - 9
4100	07	M540	Melange Check	Alkaline	Upholstery - 9
4100	08	M541	Melange Check	Vapor Glaze	Upholstery - 9
4100	09	M542	Melange Check	Faience Blue	Upholstery - 9
4100	10	M543	Melange Check	Greenware	Upholstery - 9

Teknion Color Code Identifier (P) - Panel (U) - Upholstery (A) - Architectural

textile listings by pattern number

FABRIC PATTERN	COLOR CODE	TEKNION COLOR CODE	PATTERN NAME	COLOR NAME	APPLICATION GRADE
4101	01	E417	Emergent	Galaxy	Upholstery - 13
4101	02	E418	Emergent	Lunar Eclipse	Upholstery - 13
4101	03	E419	Emergent	Backscatter	Upholstery - 13
4101	04	E420	Emergent	Pegasus	Upholstery - 13
4101	05	E421	Emergent	Earthshine	Upholstery - 13
4101	06	E422	Emergent	Stardust	Upholstery - 13
4101	07	E423	Emergent	Andromeda	Upholstery - 13
4101	08	E424	Emergent	Astra	Upholstery - 13
4101	09	E425	Emergent	Celestial	Upholstery - 13
4101	10	E426	Emergent	Nova	Upholstery - 13
4101	11	E427	Emergent	Meteor Shower	Upholstery - 13
4102	01	F136	Formwork	Metallurgy	Upholstery - 4
4102	02	F137	Formwork	Lead	Upholstery - 4
4102	03	F138	Formwork	Selenite	Upholstery - 4
4102	04	F139	Formwork	Opal	Upholstery - 4
4102	05	F140	Formwork	Pearl Ash	Upholstery - 4
4102	06	F141	Formwork	Candela	Upholstery - 4
4102	07	F142	Formwork	Kiln	Upholstery - 4
4102	08	F143	Formwork	Distill	Upholstery - 4
4102	09	F144	Formwork	Azurite	Upholstery - 4
4102	10	F145	Formwork	Verditer	Upholstery - 4
4102	11	F146	Formwork	Elixir	Upholstery - 4
4102	12	F147	Formwork	Precipitant	Upholstery - 4
4106	01	G250	Graphic Speck	Cavern	Upholstery - 9
4106	02	G251	Graphic Speck	Steel Frame	Upholstery - 9
4106	03	G252	Graphic Speck	Stonework	Upholstery - 9
4106	04	G253	Graphic Speck	Gypsum	Upholstery - 9
4106	05	G254	Graphic Speck	Earthworks	Upholstery - 9
4106	06	G255	Graphic Speck	Cob	Upholstery - 9
4106	07	G256	Graphic Speck	Breccia	Upholstery - 9
4106	08	G257	Graphic Speck	Hearth	Upholstery - 9
4106	09	G258	Graphic Speck	Fired Clay	Upholstery - 9
4106	10	G259	Graphic Speck	Ionic Order	Upholstery - 9
4106	11	G260	Graphic Speck	Waterwheel	Upholstery - 9
4106	12	G261	Graphic Speck	Trellis	Upholstery - 9
4106	13	G262	Graphic Speck	Limecrete	Upholstery - 9
4106	14	G263	Graphic Speck	Plate Glass	Upholstery - 9
4106	15	G264	Graphic Speck	Riverfront	Upholstery - 9
4106	16	G265	Graphic Speck	Structure	Upholstery - 9
4107	01	G270	Geoglyph	Drifting Sediment	Upholstery - 8
4107	02	G271	Geoglyph	Polar Lights	Upholstery - 8
4107	03	G272	Geoglyph	Moonlit Mountain	Upholstery - 8
4107	04	G273	Geoglyph	Organic Compound	Upholstery - 8
4107	05	G274	Geoglyph	Dappled Sunlight	Upholstery - 8
4107	06	G275	Geoglyph	Painted Desert	Upholstery - 8
4108	01	P186	Pebble Melange	Esker	Upholstery - 7
4108	02	P187	Pebble Melange	Earthen	Upholstery - 7
4108	03	P188	Pebble Melange	Pewter	Upholstery - 7
4108	04	P189	Pebble Melange	Tectonic	Upholstery - 7
4108	05	P190	Pebble Melange	Geyser	Upholstery - 7
4108	06	P191	Pebble Melange	Palustrine	Upholstery - 7
4108	07	P192	Pebble Melange	Forest Marble	Upholstery - 7
4108	08	P193	Pebble Melange	Everglade	Upholstery - 7
4108	09	P194	Pebble Melange	Estuary	Upholstery - 7
4108	10	P195	Pebble Melange	Meteor	Upholstery - 7
4108	11	P196	Pebble Melange	Barkhan	Upholstery - 7
4108	12	P197	Pebble Melange	Lava	Upholstery - 7

Teknion Color Code Identifier (P) - Panel (U) - Upholstery (A) - Architectural

textile listings by pattern number

FABRIC PATTERN	COLOR CODE	TEKNION COLOR CODE	PATTERN NAME	COLOR NAME	APPLICATION GRADE
4109	01	P212	Particulate	Molecule	Upholstery - 5
4109	02	P213	Particulate	Light Speed	Upholstery - 5
4109	03	P214	Particulate	Granule	Upholstery - 5
4109	04	P215	Particulate	Allotrope	Upholstery - 5
4109	05	P216	Particulate	Current	Upholstery - 5
4109	06	P217	Particulate	Corrosion	Upholstery - 5
4109	07	P218	Particulate	Inertia	Upholstery - 5
4109	08	P219	Particulate	Swell	Upholstery - 5
4109	09	P220	Particulate	Oxidation	Upholstery - 5
4109	10	P221	Particulate	Proton	Upholstery - 5
4109	11	P222	Particulate	Irrigation	Upholstery - 5
4109	12	P223	Particulate	Isotope	Upholstery - 5
4109	13	P224	Particulate	Electrostatic	Upholstery - 5
4109	14	P225	Particulate	Quasar	Upholstery - 5
4109	15	P226	Particulate	Smolder	Upholstery - 5
4110	01	R654 (P) - M328 (U/A)	Megacheck	Liminal	Panel - 2, Upholstery - 2, Architectural - 2
4110	02	R655 (P) - M329 (U/A)	Megacheck	Convex	Panel - 2, Upholstery - 2, Architectural - 2
4110	03	R656 (P) - M330 (U/A)	Megacheck	Concave	Panel - 2, Upholstery - 2, Architectural - 2
4110	04	R657 (P) - M331 (U/A)	Megacheck	Drop Shadow	Panel - 2, Upholstery - 2, Architectural - 2
4110	05	R658 (P) - M332 (U/A)	Megacheck	Litmus	Panel - 2, Upholstery - 2, Architectural - 2
4110	06	R659 (P) - M333 (U/A)	Megacheck	Gradient	Panel - 2, Upholstery - 2, Architectural - 2
4110	07	R660 (P) - M334 (U/A)	Megacheck	Distort	Panel - 2, Upholstery - 2, Architectural - 2
4110	08	R661 (P) - M335 (U/A)	Megacheck	Resolution	Panel - 2, Upholstery - 2, Architectural - 2
4110	09	R662 (P) - M336 (U/A)	Megacheck	Glitch	Panel - 2, Upholstery - 2, Architectural - 2
4110	10	R663 (P) - M337 (U/A)	Megacheck	Flashbulb	Panel - 2, Upholstery - 2, Architectural - 2
4110	11	R664 (P) - M338 (U/A)	Megacheck	Visage	Panel - 2, Upholstery - 2, Architectural - 2
4110	12	R665 (P) - M339 (U/A)	Megacheck	Magnitude	Panel - 2, Upholstery - 2, Architectural - 2
4111	01	E216	Everyday Boucle	Black Lily	Upholstery - 7
4111	02	E217	Everyday Boucle	Stonecrop	Upholstery - 7
4111	03	E218	Everyday Boucle	Smokebush	Upholstery - 7
4111	04	E219	Everyday Boucle	Silver Aster	Upholstery - 7
4111	05	E220	Everyday Boucle	Artemisia	Upholstery - 7
4111	06	E221	Everyday Boucle	Lamb's Ear	Upholstery - 7
4111	07	E222	Everyday Boucle	Cassava	Upholstery - 7
4111	08	E223	Everyday Boucle	Tussock	Upholstery - 7
4111	09	E224	Everyday Boucle	Thicket	Upholstery - 7
4111	10	E225	Everyday Boucle	Moss	Upholstery - 7
4111	11	E226	Everyday Boucle	Wintergreen	Upholstery - 7
4111	12	E227	Everyday Boucle	Bay Laurel	Upholstery - 7
4111	13	E228	Everyday Boucle	Delphinium	Upholstery - 7
4111	14	E229	Everyday Boucle	Night Bloom	Upholstery - 7
4111	15	E230	Everyday Boucle	Blue Phlox	Upholstery - 7
4111	16	E231	Everyday Boucle	Larkspur	Upholstery - 7
4111	17	E232	Everyday Boucle	Yarrow	Upholstery - 7
4111	18	E233	Everyday Boucle	Honeysuckle	Upholstery - 7
4111	19	E234	Everyday Boucle	Spicebush	Upholstery - 7
4111	20	E235	Everyday Boucle	Rockrose	Upholstery - 7
4111	21	E236	Everyday Boucle	Firethorn	Upholstery - 7
4111	22	E237	Everyday Boucle	Purple Basil	Upholstery - 7
4112	01	R388	Rubric	Straw Clay	Upholstery - 11
4112	02	R389	Rubric	Pink Laterite	Upholstery - 11
4112	03	R390	Rubric	Rammed Earth	Upholstery - 11
4112	04	R391	Rubric	Submerged Stone	Upholstery - 11
4112	05	R392	Rubric	Glass Block	Upholstery - 11
4112	06	R393	Rubric	Stacked Slate	Upholstery - 11

Teknion Color Code Identifier (P) - Panel (U) - Upholstery (A) - Architectural

textile listings by pattern number

FABRIC PATTERN	COLOR CODE	TEKNION COLOR CODE	PATTERN NAME	COLOR NAME	APPLICATION GRADE
4114	01	B388	Barberpole Basket	Licorice Root	Upholstery - 8
4114	02	B389	Barberpole Basket	Maelstrom	Upholstery - 8
4114	03	B390	Barberpole Basket	Double Helix	Upholstery - 8
4114	04	B391	Barberpole Basket	Wisp	Upholstery - 8
4114	05	B392	Barberpole Basket	Mycelium	Upholstery - 8
4114	06	B393	Barberpole Basket	Braided Rope	Upholstery - 8
4114	07	B394	Barberpole Basket	Uzumaki	Upholstery - 8
4114	08	B395	Barberpole Basket	Copper Coil	Upholstery - 8
4114	09	B396	Barberpole Basket	Cherry Twist	Upholstery - 8
4114	10	B397	Barberpole Basket	Tendril	Upholstery - 8
4114	11	B398	Barberpole Basket	Meander	Upholstery - 8
4114	12	B399	Barberpole Basket	Tempest	Upholstery - 8
4115	01	F428	Contrast Slub	Charred Seed	Architectural - 4
4115	02	F429	Contrast Slub	Silver Thyme	Architectural - 4
4115	03	F430	Contrast Slub	Cotton Blossom	Architectural - 4
4115	04	F431	Contrast Slub	Tumbleweed	Architectural - 4
4115	05	F432	Contrast Slub	Bramble	Architectural - 4
4115	06	F433	Contrast Slub	Manzanita	Architectural - 4
4115	07	F434	Contrast Slub	Cactus Flower	Architectural - 4
4115	08	F435	Contrast Slub	Scarlet Sage	Architectural - 4
4115	09	F436	Contrast Slub	Anemone	Architectural - 4
4115	10	F437	Contrast Slub	Crepe Myrtle	Architectural - 4
4115	11	F438	Contrast Slub	Wild Indigo	Architectural - 4
4115	12	F439	Contrast Slub	Jacaranda	Architectural - 4
4115	13	F440	Contrast Slub	Cenote	Architectural - 4
4115	14	F441	Contrast Slub	Oleander	Architectural - 4
4115	15	F442	Contrast Slub	Eucalyptus	Architectural - 4
4115	16	F443	Contrast Slub	Lemongrass	Architectural - 4
4118	01	S432	Soft Static	Semitone	Upholstery - 6
4118	02	S433	Soft Static	Desert Wind	Upholstery - 6
4118	03	S434	Soft Static	Whirr	Upholstery - 6
4118	04	S435	Soft Static	Carillon	Upholstery - 6
4118	05	S436	Soft Static	Heartbeats	Upholstery - 6
4118	06	S437	Soft Static	Timbre	Upholstery - 6
4118	07	S438	Soft Static	Arpeggio	Upholstery - 6
4118	08	S439	Soft Static	Waterfall	Upholstery - 6
4118	09	S440	Soft Static	Ambient Nature	Upholstery - 6
4119	01	S181	Super Shearling	Neroli	Upholstery - 9
4119	02	S182	Super Shearling	Ambergris	Upholstery - 9
4119	03	S183	Super Shearling	Aromatic Water	Upholstery - 9
4119	04	S184	Super Shearling	Musk	Upholstery - 9
4119	05	S185	Super Shearling	Earth Tincture	Upholstery - 9
4119	06	S186	Super Shearling	Petitgrain	Upholstery - 9
4119	07	S187	Super Shearling	Carrissa	Upholstery - 9
4119	08	S188	Super Shearling	Enfleurage	Upholstery - 9
4119	09	S189	Super Shearling	Cedar	Upholstery - 9
4119	10	S190	Super Shearling	Heart Note	Upholstery - 9
4119	11	S191	Super Shearling	Incense	Upholstery - 9
4119	12	S192	Super Shearling	Ginger	Upholstery - 9
4119	13	S193	Super Shearling	Green Sap	Upholstery - 9
4119	14	S194	Super Shearling	Oakmoss	Upholstery - 9
4119	15	S195	Super Shearling	Conifer	Upholstery - 9
4119	16	S196	Super Shearling	Blue Cypress	Upholstery - 9
4119	17	S197	Super Shearling	Seawater	Upholstery - 9
4119	18	S198	Super Shearling	Lupine	Upholstery - 9
4119	19	S199	Super Shearling	Attar	Upholstery - 9
4119	20	S200	Super Shearling	Blackcurrant	Upholstery - 9

Teknion Color Code Identifier (P) - Panel (U) - Upholstery (A) - Architectural

textile listings by pattern number

FABRIC PATTERN	COLOR CODE	TEKNION COLOR CODE	PATTERN NAME	COLOR NAME	APPLICATION GRADE
4120	01	S376	Sgraffito	Ironstone	Upholstery - 7
4120	02	S377	Sgraffito	Ceramic Flux	Upholstery - 7
4120	03	S378	Sgraffito	Wax Resist	Upholstery - 7
4120	04	S379	Sgraffito	Salt Glaze	Upholstery - 7
4120	05	S380	Sgraffito	Pink Clay	Upholstery - 7
4120	06	S381	Sgraffito	Acid Etch	Upholstery - 7
4120	07	S382	Sgraffito	Aventurine	Upholstery - 7
4120	08	S383	Sgraffito	Cold Cast	Upholstery - 7
4120	09	S384	Sgraffito	Cobalt Oxide	Upholstery - 7
4121	01	H154	Herringbone Hybrid	Circadian Rhythm	Upholstery - 8
4121	02	H155	Herringbone Hybrid	Rock Cycle	Upholstery - 8
4121	03	H156	Herringbone Hybrid	Air Current	Upholstery - 8
4121	04	H157	Herringbone Hybrid	Ice Age	Upholstery - 8
4121	05	H158	Herringbone Hybrid	Metamorphosis	Upholstery - 8
4121	06	H159	Herringbone Hybrid	Oscillate	Upholstery - 8
4121	07	H160	Herringbone Hybrid	Convergent	Upholstery - 8
4121	08	H161	Herringbone Hybrid	Phoenix Rising	Upholstery - 8
4121	09	H162	Herringbone Hybrid	Primary Growth	Upholstery - 8
4121	10	H163	Herringbone Hybrid	Flow State	Upholstery - 8
4121	11	H164	Herringbone Hybrid	High Tide	Upholstery - 8
4122	01	H489	Hyped Up	Jete	Upholstery - 7
4122	02	H490	Hyped Up	Hubbub	Upholstery - 7
4122	03	H491	Hyped Up	Hot Shot	Upholstery - 7
4122	04	H492	Hyped Up	Fresh	Upholstery - 7
4122	05	H493	Hyped Up	Dandy	Upholstery - 7
4122	06	H494	Hyped Up	Pep	Upholstery - 7
4122	07	H495	Hyped Up	Piqued	Upholstery - 7
4122	08	H496	Hyped Up	Splash	Upholstery - 7
4122	09	H497	Hyped Up	Spruced Up	Upholstery - 7
4123	01	W422	Wooly Wooly	Whisper	Upholstery - 8
4123	02	W423	Wooly Wooly	Hush	Upholstery - 8
4123	03	W424	Wooly Wooly	Lull	Upholstery - 8
4123	04	W425	Wooly Wooly	Cozy	Upholstery - 8
4123	05	W426	Wooly Wooly	Toasty	Upholstery - 8
4123	06	W427	Wooly Wooly	Snug	Upholstery - 8
4123	07	W428	Wooly Wooly	Nestle	Upholstery - 8
4123	08	W429	Wooly Wooly	Tenderheart	Upholstery - 8
4123	09	W430	Wooly Wooly	Still	Upholstery - 8
4123	10	W431	Wooly Wooly	Tranquil	Upholstery - 8
4125	01	D196	Datastorm	Cloudburst	Upholstery - 9
4125	02	D197	Datastorm	Silo	Upholstery - 9
4125	03	D198	Datastorm	Hot Wire	Upholstery - 9
4125	04	D199	Datastorm	Qubit	Upholstery - 9
4125	05	D200	Datastorm	Zap	Upholstery - 9
4125	06	D201	Datastorm	Airdrop	Upholstery - 9
4125	07	D202	Datastorm	Streaming	Upholstery - 9
4125	08	D203	Datastorm	Recall	Upholstery - 9
4125	09	D204	Datastorm	Shadow Noise	Upholstery - 9

Teknion Color Code Identifier (P) - Panel (U) - Upholstery (A) - Architectural

textile listings by pattern number

FABRIC PATTERN	COLOR CODE	TEKNION COLOR CODE	PATTERN NAME	COLOR NAME	APPLICATION GRADE
4127	01	T319	Trichroma	Siphon	Upholstery - 4
4127	02	T320	Trichroma	Wash	Upholstery - 4
4127	03	T321	Trichroma	Whistle	Upholstery - 4
4127	04	T322	Trichroma	Frolic	Upholstery - 4
4127	05	T323	Trichroma	Sashay	Upholstery - 4
4127	06	T324	Trichroma	Roam	Upholstery - 4
4127	07	T325	Trichroma	Amble	Upholstery - 4
4127	08	T326	Trichroma	Somersault	Upholstery - 4
4127	09	T327	Trichroma	Leapfrog	Upholstery - 4
4127	10	T328	Trichroma	Cultivate	Upholstery - 4
4127	11	T329	Trichroma	Splash	Upholstery - 4
4127	12	T330	Trichroma	Drizzle	Upholstery - 4
4127	13	T331	Trichroma	Plunge	Upholstery - 4
4127	14	T332	Trichroma	Barge	Upholstery - 4
4127	15	T333	Trichroma	Vault	Upholstery - 4
4128	01	L380	Lithoprint	Zinc	Upholstery - 4w
4128	02	L381	Lithoprint	Cloudy Crystal	Upholstery - 4
4128	03	L382	Lithoprint	Weathered Stone	Upholstery - 4
4128	04	L383	Lithoprint	Space Rock	Upholstery - 4
4128	05	L384	Lithoprint	Chocolate Opal	Upholstery - 4
4128	06	L385	Lithoprint	Tiger's Eye	Upholstery - 4
4128	07	L386	Lithoprint	Pampel	Upholstery - 4
4128	08	L387	Lithoprint	Citrine	Upholstery - 4
4128	09	L388	Lithoprint	Jadeite	Upholstery - 4
4128	10	L389	Lithoprint	Sea Pearl	Upholstery - 4
4128	11	L390	Lithoprint	Marquise	Upholstery - 4
4128	12	L391	Lithoprint	Nephrite	Upholstery - 4
7003	01	R380 (P) - B380 (A)	Rationale	Classical	Panel - 1, Architectural - 1
7003	02	R381 (P) - B381 (A)	Rationale	Drift	Panel - 1, Architectural - 1
7003	03	R382 (P) - B382 (A)	Rationale	Firma	Panel - 1, Architectural - 1
7003	04	R383 (P) - B383 (A)	Rationale	Lucid	Panel - 1, Architectural - 1
7003	05	R384 (P) - B384 (A)	Rationale	Abstract	Panel - 1, Architectural - 1
7003	06	R385 (P) - B385 (A)	Rationale	Mind’s Eye	Panel - 1, Architectural - 1
7003	07	R386 (P) - B386 (A)	Rationale	Infinite	Panel - 1, Architectural - 1
7003	08	R387 (P) - B387 (A)	Rationale	Transcend	Panel - 1, Architectural - 1
7012	01	W117 (P) - T141 (A)	Twining	Ivory Vine	Panel - 2, Architectural - 2
7012	02	W121 (P) - T145 (A)	Twining	Quill	Panel - 2, Architectural - 2
7012	03	W122 (P) - T146 (A)	Twining	Silvery Strand	Panel - 2, Architectural - 2
7012	04	W123 (P) - T147 (A)	Twining	Bulrush	Panel - 2, Architectural - 2
7012	05	W120 (P) - T144 (A)	Twining	Sisal	Panel - 2, Architectural - 2
7012	06	W119 (P) - T143 (A)	Twining	Abaca	Panel - 2, Architectural - 2
7012	07	W118 (P) - T142 (A)	Twining	Pale Straw	Panel - 2, Architectural - 2
7020	01	J207	Juxtapose	Greenheart	Upholstery - 7
7020	02	J208	Juxtapose	Yakisugi	Upholstery - 7
7020	03	J209	Juxtapose	Lacquer	Upholstery - 7
7020	04	J210	Juxtapose	Timber	Upholstery - 7
7020	05	J211	Juxtapose	Lumber	Upholstery - 7
7020	06	J212	Juxtapose	Rosewood	Upholstery - 7

Teknion Color Code Identifier (P) - Panel (U) - Upholstery (A) - Architectural

general information

TEKNIPAINT & TEKNISTAIN 97

FABRIC DIRECTIONAL GUIDELINES 98

CUSTOMER'S OWN MATERIAL (COM) 100

CARE & MAINTENANCE 101

TOUCH-UP KITS 102

teknipaint & teknistain

teknipaint

A TekniPaint form is required if the customer requires a custom paint color.

The color matching procedures will take a minimum of 10 working days.

Standard lead times apply once customer approved sample is received by Teknion Customer Service Representative.

using the teknipaint

Prior to placing the order, Dealer submits the color match sample (minimum size 2" x 2") to Teknion Customer Service Representative in conjunction with a completed TekniPaint form.

After the color match process is completed, two (2) samples are returned to the Customer Service Representative who forwards them to the Dealer with a sign-off sticker, attached to the back of the sample, for approval by the customer.

Customer formally signs-off on the color samples by signing the attached sticker.

Dealer returns one (1) of the customer approved samples to a Customer Service Representative or a fax of the signed off sample to Teknion.

Dealer submits the order, quoting the paint name and paint number as indicated on the customer sign-off sticker.

Teknion products included in this program:

- Panels and Supports
- Providers, Overheads & Active Storage Products
- Electrical Products
- Pedestals, Lateral files & Storage Cabinets.

TekniPaint forms and information on how to use these forms can be found at www.teknion.com/products for your printing convenience.

teknistain

A TekniStain form is required if a Teknion Wood product is needed in colors outside our standard offering.

To order a Custom Wood Stain, follow these instructions:

If specifying a custom color for Seating, please use code NOCWS.

If specifying a custom color for District, Interpret, Leverage, Marketplace, TOS, Transit or Expansion Casegoods, please use code ZOCWS.

If specifying a custom color for Dossier, Cana, Westcoast, Solitär, Grayson, Agenda, Gemini, Table&Conferencing and Executive Casegoods, please use code ZCCWS.

Please forward a TekniStain form to your Customer Service Representative along with two color samples. Allow two (2) weeks for the TekniStain approval process. The Custom Wood Stain sample must be signed off prior to placing product order. The total lead time will begin once final approval samples have been received from customer to Teknion.

using the teknistain

Teknion requires dealer or client to supply one (1) TekniStain form for each color being custom matched.

Include three (3) for U.S./two (2) for Canada minimum 3 x 3 color samples for each color being submitted for Custom Wood Stain

Teknion will provide customer with two color samples for each TekniStain submitted. The customer must sign the back of the approved sample. The second sample to be kept for customer reference.

TekniStain forms and information on how to use these forms can be found at www.teknion.com/products for your printing convenience.

fabric directional guidelines

Railroaded and Off-the-Bolt are terms that describe the orientation the fabric is applied to furniture.

railroaded

All Teknion Standard panel fabrics are applied Railroaded.

Panel fabrics are typically 66" wide and are applied Railroaded regardless of a pattern orientation on the fabric. The fabric width equals the height of the element. For panel elements or screens greater than 60" in height, fabric direction is applied Off-the-Bolt, as the height of the product is greater than the width of the fabric.

The combination of panel heights up to 60" with higher panels will result in opposite pattern directions. Non-directional fabrics are recommended for these installations.

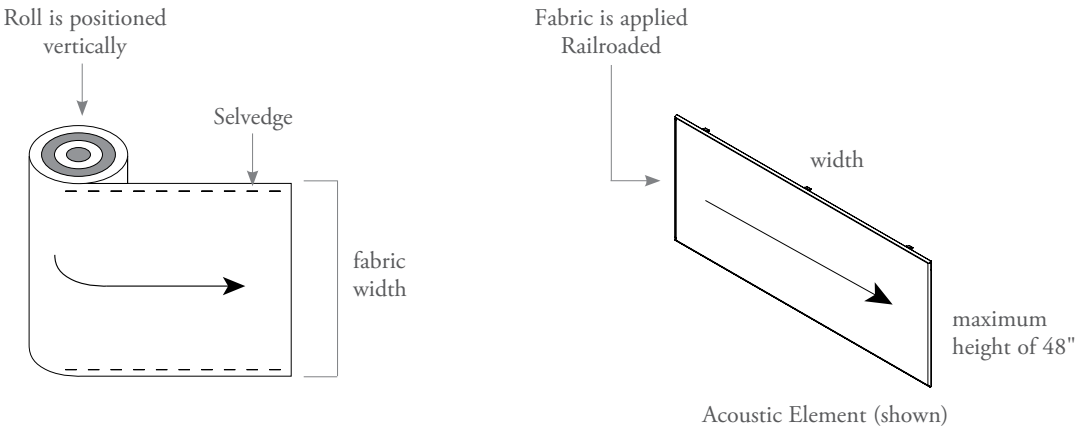

off-the-bolt

All Teknion Standard Architectural and Upholstery fabrics are applied Off-the-Bolt. Most upholstery fabrics are 54" wide.

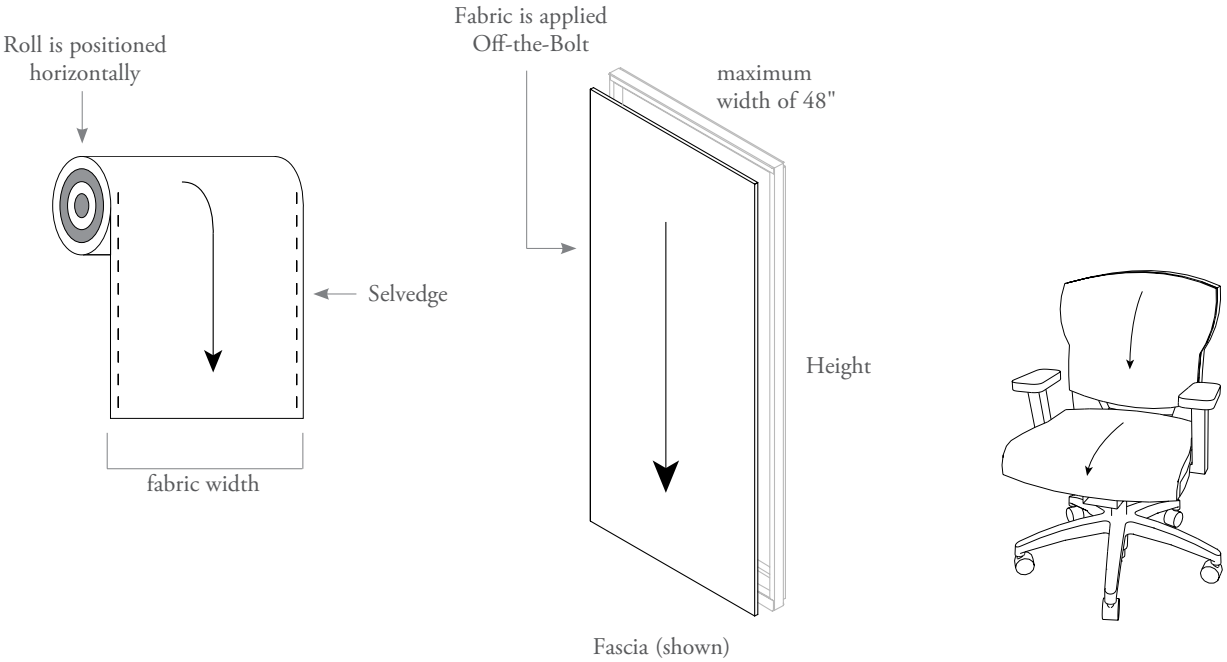

fabric directional guidelines (continued)

pedestal & credenza cushions

Cushions on Teknion Pedestals and Credenzas are also applied Off-the-Bolt as illustrated below. The combination of storage cushions and the orientation of these products within an environment will result in fabric patterns appearing in opposite directions. If there is a need to change the orientation of the pattern on the cushion, a CR/Special is required.

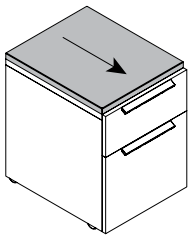

Pedestal

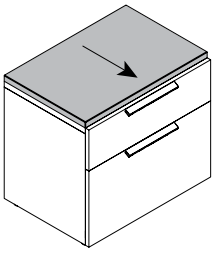

Stretch Pedestal

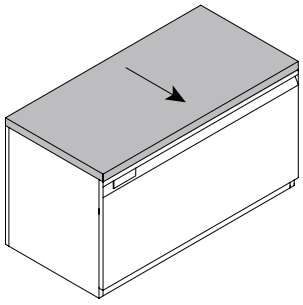

Extra Large Stretch Pedestal

pattern directions

The placement of storage within the workstation can result in the fabric pattern running in the opposite direction. Please see example below.

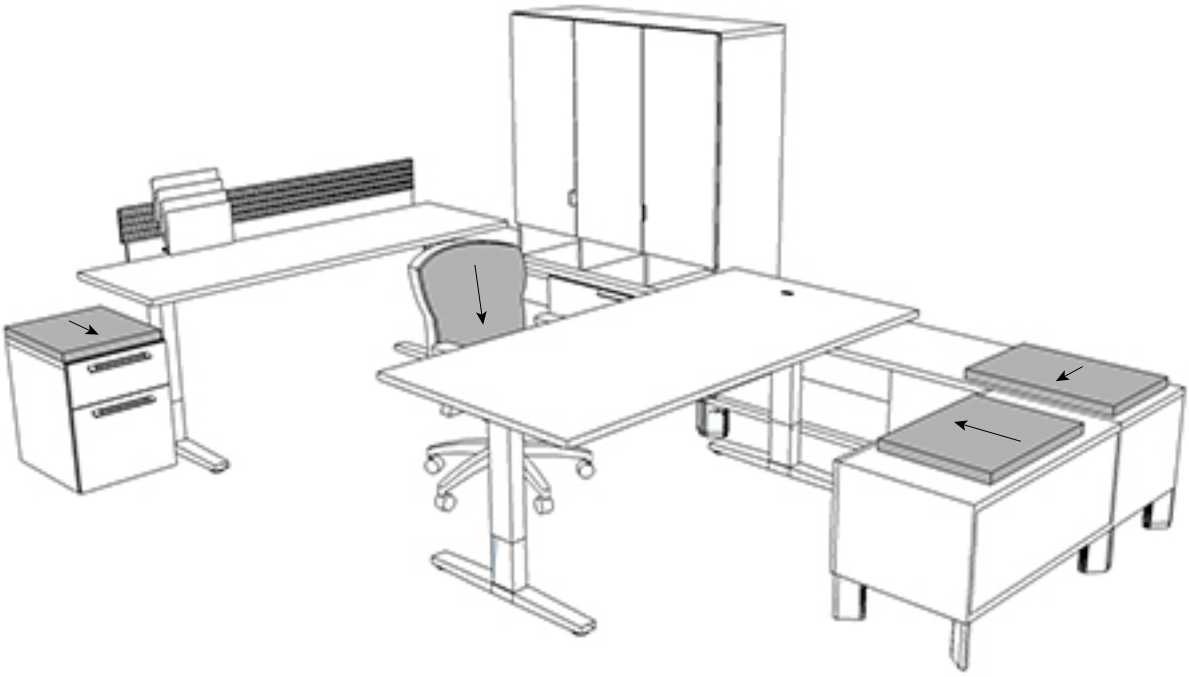

customer's own material

customers own material or leather (COM / COL)

A COM form is required if a Teknion product is needed in a textile outside our Standard or Graded-In Programs. For any COM/COL requests, please check with Teknion Customer Service for a record of the test results. If the fabric/leather has been approved, a serial number for the fabric and a cutting direction will be supplied by Teknion. This number must be shown on the order. Please note, for various reasons, certain fabrics/leathers may not be approved for use. The required COM/COL yardages given on the price pages are for orders up to 100 chairs. This number is approximate and can vary depending on the pattern repeat.

The COM process will take a minimum of 5 working days once the test yardage has been received by Teknion.

COM forms and information on how to use these forms can be found at www.teknion.com/products for your printing convenience.

COM pattern directional guidelines for seating

Usually, seating fabrics are patterned to run Off-the-Bolt. At the request of the customer, upholstery can be applied railroaded but yardage requirements may vary.

To avoid unnecessary confusion, you must always specify Off-the-Bolt or railroaded when using a COM fabric.

estimated material requirement

More yardage may be required depending upon the upholstery pattern, repeat, directionality and pattern matching. Leather yield varies from 60-80% and may be affected by the quality of the COL including location and quantity of blemishes, size and shape of hide. The size of the sewing pattern and the number of units ordered may also impact yield. Always round-up to the next hide.

teknion dna™

When selecting a COM fabric on Teknion **dna**, please note fabrics containing the following characteristics may result in poor application and therefore may be rejected :

- Lack of elasticity & recovery from an extension (below 3% threshold)
- Higher percentage of fiber content, (i.e. Cotton, Viscose rayon & polyolefin fibers)
- Very tight fabric construction
- Special finishes (Crypton, GreenShield, stain resistant, etc.)

fabric direction

All Standard Panel Fabrics are applied railroaded.

Railroaded application (RR)

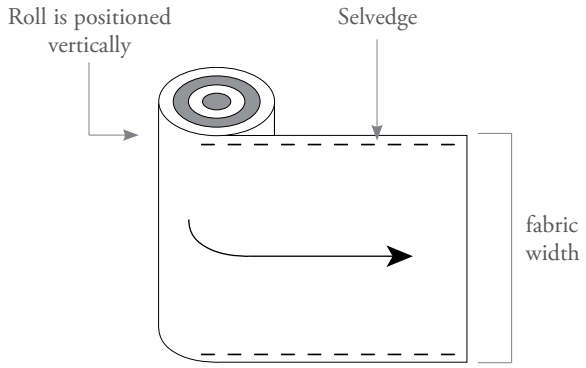

All Standard Seating and Architectural Fabrics are applied Off-the-Bolt.

Off-the-Bolt application (OB)

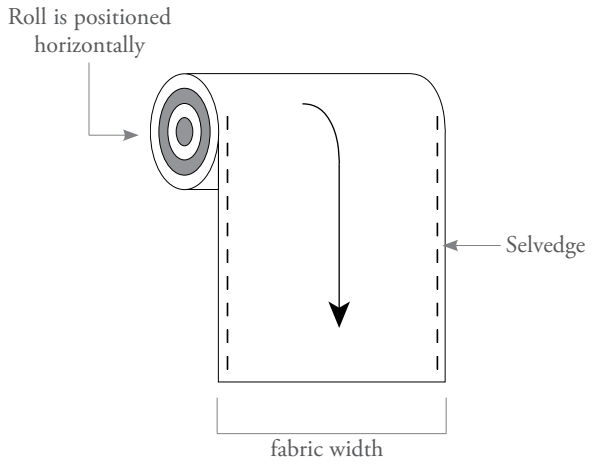

care & maintenance

Regular cleaning of your furniture system will maintain the appearance and optimize the long term return on investment.

fabric

Panel and Seating fabrics are comprised of a variety of fiber construction. They are colorfast to standard wet and dry cleaning procedures. Avoid excessive brushing or rubbing during cleaning to prevent fuzzing of the fabric surface. Due to the low absorption properties, soiling will tend to remain on the fiber surface. To prevent overall soiling, frequent vacuuming or light brushing to remove dust and grime is recommended.

Oil or grease-type spots will respond to mild solvents or dry cleaning agents. When spot cleaning with a mild solvent or dry cleaning agent, follow instructions carefully and clean only in a well ventilated room. Avoid any product which contains carbon tetrachloride or other toxic materials. The blotting technique, without rubbing, should be sufficient to remove most spots.

To remove general dirt or grime spots, sponge with the foam from a mild detergent or upholstery shampoo. Rinse well with a clean sponge to remove traces of the water-based cleaning agent.

When spot cleaning with either the water-base or solvent-base type cleaning agents, test a small inconspicuous area before proceeding to spot clean the fabric any further. If an overall soiled condition has been reached, contact a professional furniture cleaning service.

leather

Clean leather with a damp cloth and mild soap using light, circular motions. Repeat the process with a clean moist cloth and allow the leather to dry. A soft, dry cloth can then be used to polish the leather. Do not clean leather with detergents.

vinyl durable

Should be periodically cleaned to maintain its appearance and prevent build-up of dirt and contaminates. Any stain, spill or soiling should be cleaned up promptly to prevent the possibility of permanent staining. When cleaning, always rub gently.

Dried on Dirt

Remove with a soft cloth dampened with water. Wipe with soft cloth dampened with water. Allow to air dry.

Liquid Spills

Wipe immediately with a clean absorbent cloth. Rinse with clean water.

Stubborn Dirt

Wash with a soft cloth moistened with a mild soap and water. Rinse with clean water. Stubborn Spots and Stains: Spray with either *Formula 409®*, or *Tannery Car Care Cleaner®* and rub with a soft cloth. Rinse with clean water. Powdered abrasives, abrasive cleaners, and steel wool damage vinyl, as do strong solvents, lacquer solvents and inks. Lotions, waxes and polishes, etc., contain oils and dyes that can cause stiffening and staining of vinyls.

ultra durable

Cleaning Ultra Durable vinyl for most stains is achieved by prompt, energetic washing using a sponge and warm, soapy water, clear water rinses or a mild, non-abrasive cleaner. Moderate scrubbing with a medium bristle brush will help to loosen soiling materials from the depressions of embossed surfaces but have not penetrated the vinyl surface.

Advanced Cleaning Methods

Use the following commercially available mild detergents in accordance with the manufacturer's instructions, *Formula 409®, Fantastik®, or Mr. Clean®*. When opening a new container, please test the cleaner in an inconspicuous area as cleaner manufacturers may change formula without notice.

Full strength rubbing alcohol or mineral spirits may be tried with caution if the commercially available cleaners do not work. Indiscriminate use of strong solvents can severely damage or discolor Ultra Durable vinyl.

Ultra Durable offers enhanced resistance to most of the common chemicals used for sterilization and cleaning in medical environments. Ultra Durable will resist, without serious discoloration, the repeated action of normal dilutions of chlorine bleaches, ammonia based cleaners, excluding Quaternary Ammonium Compounds and Phenolics, as well as many common oxidizing and reducing chemicals.

Bleach can be diluted up to 9:1 ratio (10%). Liberally apply diluted disinfectant using a sponge, rinse with cold water several times, and then wipe dry. Repeat if necessary. Federal regulation requires that guidelines on the bleach label need to be followed for antiseptic or antimicrobial purposes.

touch-up kits

Teknion offers two types of Touch-Up Kits; a bottle with brush (paint) or a crayon, depending on which finish the product is applied.

KT100 – Bottle with brush is available for:

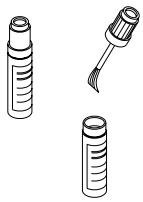

Foundation
Mica
Accent
Filling & Storage Paint Colors
Seamless Color (not available for Group 2 colors)

KT401 – Crayon is available for:

Fascia Laminate
Flintwood
Natural Veneer
Seamless Color (available for Group 1 colors)

KT402 – Marker is available for:

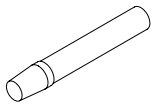

Flintwood
Natural Veneer
Seamless Color (available for Group 1 colors)

Ordering Touch-Up Kits:

Touch-Up Kits can be ordered through the Leverage product line specification software.

touch-up kit directions

Before You Begin

Make sure the surface is clean, dry and free of grease and oil. If needed, use a mild solvent and a clean cloth to wipe down surface. NOTE: Touch-Up should be used on small nicks and scratches only. it is not meant for large areas or deep gouges.

How to Use the Small Brush (KT100)

Always shake the bottle for at least one minute after the mixing balls begin to rattle. If the product is not adequately mixed, the color of the paint will not be correct. (Do not try to get all of the residue on the bottom of the bottle; it will never totally blend). Make sure that the product is capped tightly before shaking.

Dip brush into the bottle as far as it will go.

Slowly remove the brush from the bottle. The brush wiper which is mounted in the bottle opening reduces the opening diameter and helps to wipe excess paint from the brush. This eliminates dripping paint from the brush after removing it from the bottle.

Brush paint on with smooth strokes. Use very slight pressure when touching the brush to the substrate. Avoid retouching the wet paint film with the brush after it is applied. Do not try to retouch applied paint after paint has set up for more than 2 minutes.

When finished, recap the bottle.

How to Use the Crayon (KT401)

Apply by simply rubbing the semi-hard compound into the defect or damaged substrate or finish in a variety of directions.

Once applied, and slightly overfilled, the excess filler is removed by carefully leveling off using a semi-flexible plastic leveling card. An old bank card works sufficiently for this step. To finish off the task, use a soft lint free cloth for wiping off any further excess material from the area being worked on. Paper towel can also be substituted for a lint free cloth and this purpose.

How to Use the Marker (KT402)

Shake marker thoroughly to get full color strength. Depress the nib to begin material flow. Do not overload the nib with material. With light strokes, slowly apply color to the damaged area being careful not to "puddle" the material. Gently feather the applied material with a finger to blend the color in with the surrounding area.

teknion

www.teknion.com

CAN/US/INT 05-27
©Teknion 2024

®, ™ trade marks of Teknion Corporation and/or its subsidiaries or licensed to it. Patents may be pending.

Some products may not be available in all markets. Contact your local Teknion Representative for availability.

SEPT24-TEX