White Paper

# Pro-fessional Audio

## Acoustic Treatment Guidelines

Control Rooms

VACOUSTIC

INNOVATIVE ACOUSTIC SOLUTIONS

*This white paper is continually updated with new and amended details. Vicoustic accepts no liability for any eventuality arising from the use of errors contained in this catalog. Vicoustic reserves the right to correct errors or misprints.*

*Please notice that the products dimensions have a tolerance of +/- 2 mm.*
*A slight color variation may occur between different batches.*

*The pictures shown are merely illustrative and might differ from the actual products. Some of the photographs used are of the older versions of the products, so they will differ in characteristics.*

*Photo credits:*
*Cover: Mega Bass Trap Control Room Example.*
*pp. 4-5; 18: Studio DMI, Las Vegas, USA (Focal, Zaor Furniture, Dangerous Music)*
*pp. 8-9: ODN Mastering Control Room, Demel, France.*
*pp. 12-13: Vicoustic Experience Centre, London, UK (HHB Communications)*
*p. 14: Japan Experience Centre (Genelec)*
*pp. 20-21: Kevin Richardson's Studio, Los Angeles, USA*
*p. 22: U2's Sound Engineer Studio, Belfast, Northern Ireland, UK.*
*pp. 36-37; 44-45: Luca Testa's HEad Music Studios, Italy.*
*p. 38: Musoneo Studio, Poland.*
*pp. 40-41: DJ Brennan Heart Control Room, Netherlands.*
*p. 60; 62: Vicoustic HQ, Paços de Ferreira, Portugal.*

White Paper

# Pro-fessional Audio

## Acoustic Treatment Guidelines

Control Rooms

V/COUSTIC

INNOVATIVE ACOUSTIC SOLUTIONS

# Introduction

A Control Room for recording, mixing, mastering or broadcast should allow to critically monitor the sound signal being reproduced, i.e. should assure a clear and complete representation of the sound message without introducing any acoustic distortions that could compromise its perception.

The use of home/project studios has increased considerably in the last decade. **Nowadays, even at a professional level, many audio engineers, artists and producers are creating almost all of their work in their project/home studios**, and only when needed, **taking it to a professional/commercial facility to finish it.**

What we are seeing is that in most cases, people are working on computer-based systems, inside of a room with very few to no acoustic treatment at all. And everyone knows that in such environments, where room acoustics are not correctly addressed, one will likely end up hearing more energy/ effects originated by the room (First and Late Reflections) than energy originated by the loudspeakers (Direct Sound).

From professional facilities to home/project studios, **the Control Room is where the critical listening work is carried out** and therefore, it requires a controlled acoustic environment.

This White Paper intends to present simple guidelines and solutions to deal with the acoustics of a Control Room.

# **Control Rooms** Acoustic treatment guidelines

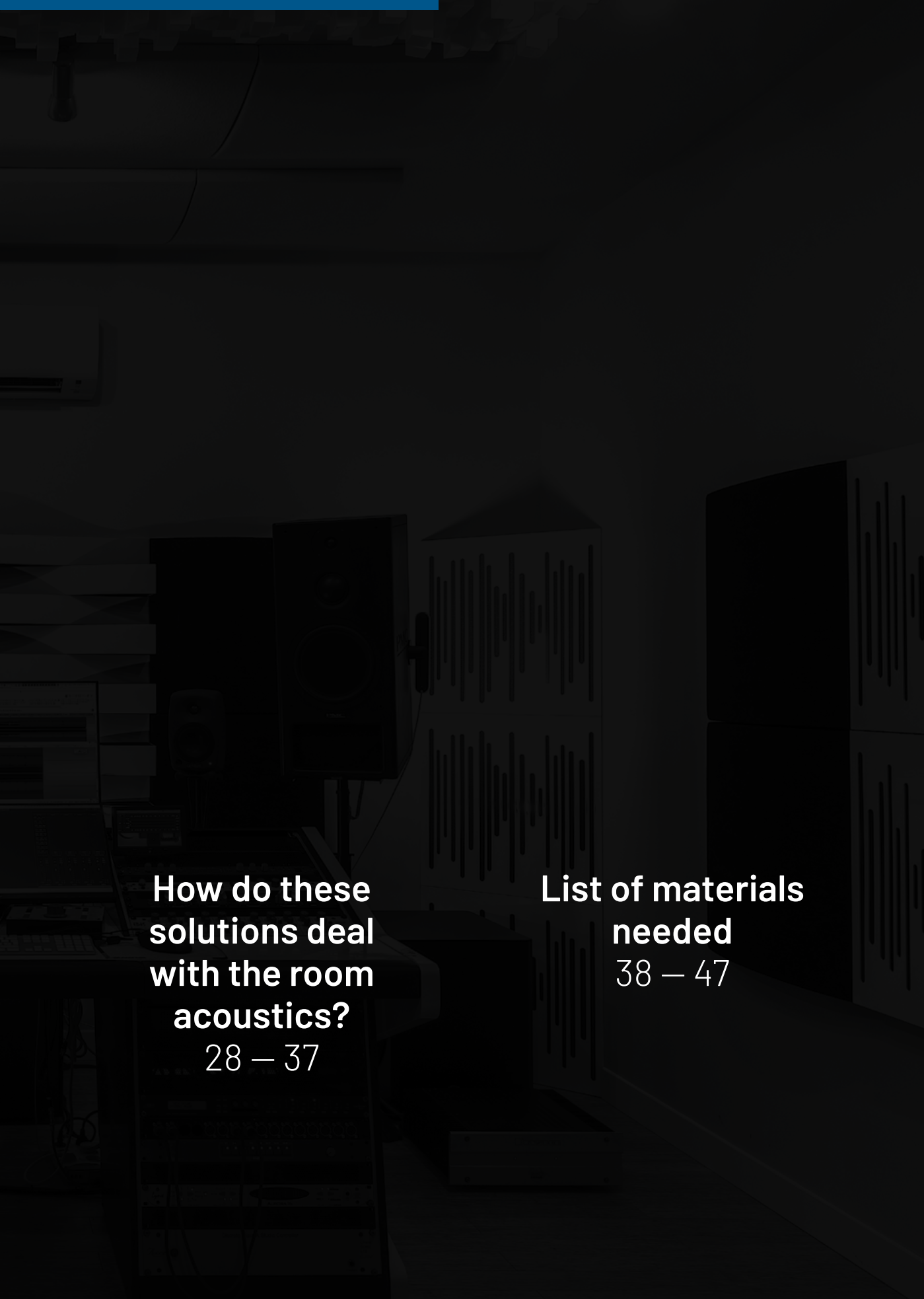

# Control Rooms **Basic Acoustic Treatment Steps**

**In order to achieve an acoustically controlled environment in a Control Room**, there are three main subjects where internal acoustic treatment should act on.

# Step 1 **Reverberation Time Optimization**


**A control Room should provide a neutral acoustic environment.**

One should be able to feel the ambiance and reverb contained in the recordings. For this reason, the acoustic environment should be as neutral as possible.

This means the sound heard in the control room should be faithful to the source material, without distortions caused by room reflections or reverberation.

Optimum Reverberation Time (RT) for a Control Room should lie within the average range of 0.2s to 0.4s. RT should also be steady and continuous in the frequency range that goes from 200Hz to 4,000Hz. Higher tolerances for octave bands below 200Hz and above 4,000Hz are admissible.

RT Optimization can use acoustic treatment materials, such as **Vicoustic sound absorption and diffusion panels**.

***Figure 1***

1. *Cinema Piano VMT (customized)*
2. *Multifuser Wood MKII 64*
3. *Cinema Round Premium*
4. *Flat Panel VMT (customized) with VicSpacer Plus*

# Step 2
# Direct Sound, First and Late Reflections

*Figure 2*

1. *Wavewood Diffuser Ultra*
2. *Flexi Wave Ultra*
3. *Flexi Wood Ultra Lite*
4. *Cinema Round Premium*
5. *Multifuser DC3*
6. *Super Bass Extreme Ultra*

When a sound system is playing within a room, a listener will hear a combination of **Direct Sound**, **First Reflections** and **Late Reflections**.

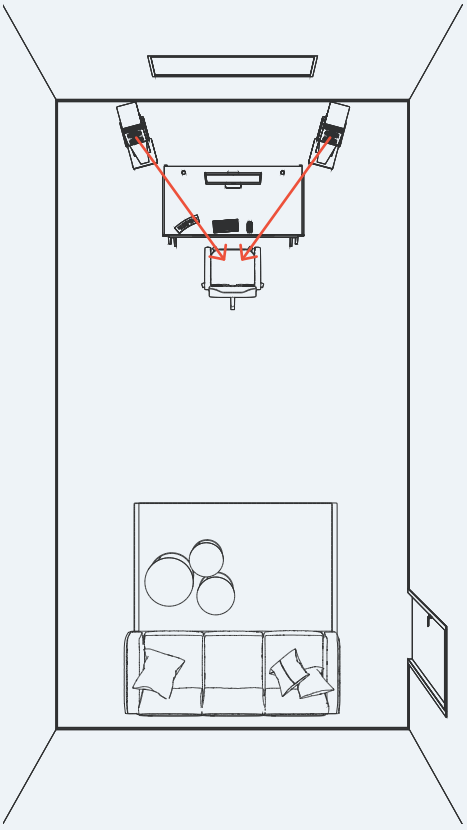

Direct Sound

## Direct Sound

As the name sugests, it is the sound that goes directly from the loudspeaker to the listener, i.e. it is the sound reaching the listener's ears without any reflection from the surrounding environment.

The Direct Sound can be seen as the sound that one wants to control, and therefore it should be maximized by, for e.g., providing an unobstructed path between the loudspeakers and the listening position.

***Figure 3**: **Direct Sound** - An unobstructed path between the loudspeakers and the listening position should be assured.*

# First Reflections

Soon after the Direct Sound, many First Reflections coming from the side, back and front walls and also from the ceiling and floor will start to arrive at the listener's ears.

These First Reflections will interfere with the Direct Sound and if not properly addressed may affect its perception by causing:

1

**Acoustical defects**, such as comb-filter effects and room modes (see acoustic defects section)

2

**Psychoacoustic effects**, which may compromise, for e.g., the stereo image and the perception of source size.

3

**Masking effects**, which may compromise the perception of first reflections and reverb contained in the recordings.

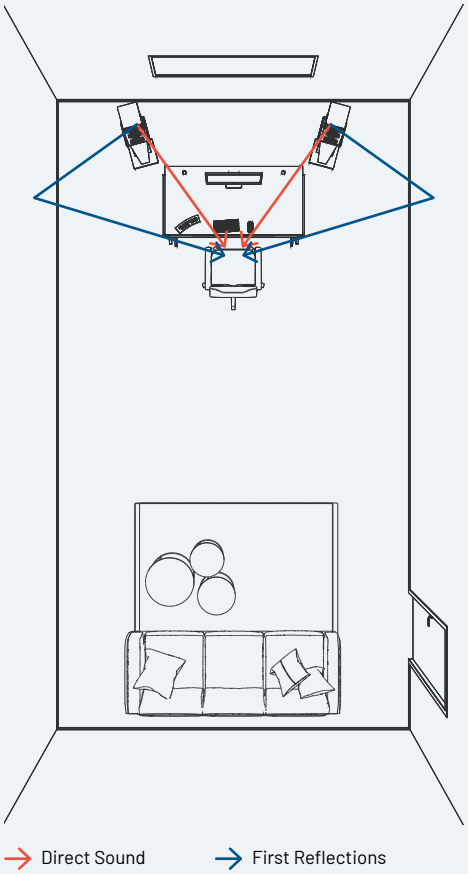


*Figure 4: First Reflections from Walls*

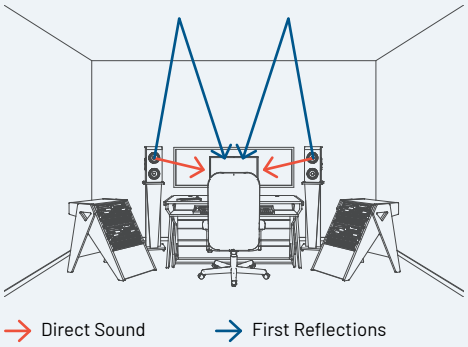


*Figure 5: First Reflections from Ceiling*

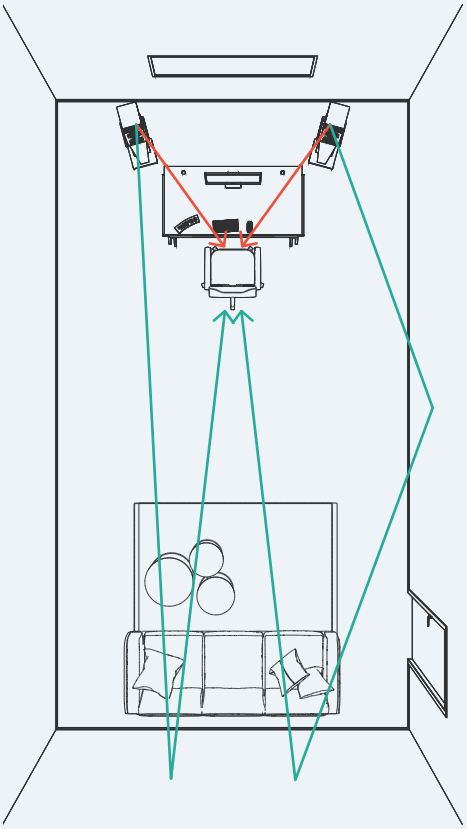


*Figure 6: Late Reflections from Walls*

# Late Reflections

Sound that is not absorbed will continue to bounce around the room's surfaces and will arrive at the listener's position with a delay when compared to the Direct Sound. These reflections are called Late Reflections and give the perception of the room's reverberation.

Similarly to the First Reflections, these Late Reflections will also interact with the Direct Sound and if not properly addressed may affect its perception by causing:

1. **Excessive reverberation** that will impact speech intelligibility and and overall sound definition.

2. **Unbalanced reverberation**, which will impact equalization.

3. **Psychoacoustic effects**, which may compromise, for e.g., the perception of room size.

4. **Masking effects**, which may compromise the perception of the ambience and reverberation contained in the audio signals being reproduced.

# Step 3
# **Sound Field Anomalies**

*Figure 7*

1. *Multifuser DC3*
2. *Wavewood Ultra Lite*
3. *Flexi Wave Ultra (customized)*
4. *Super Bass Extreme Ultra VMT*
5. *Cinema Round Premium*

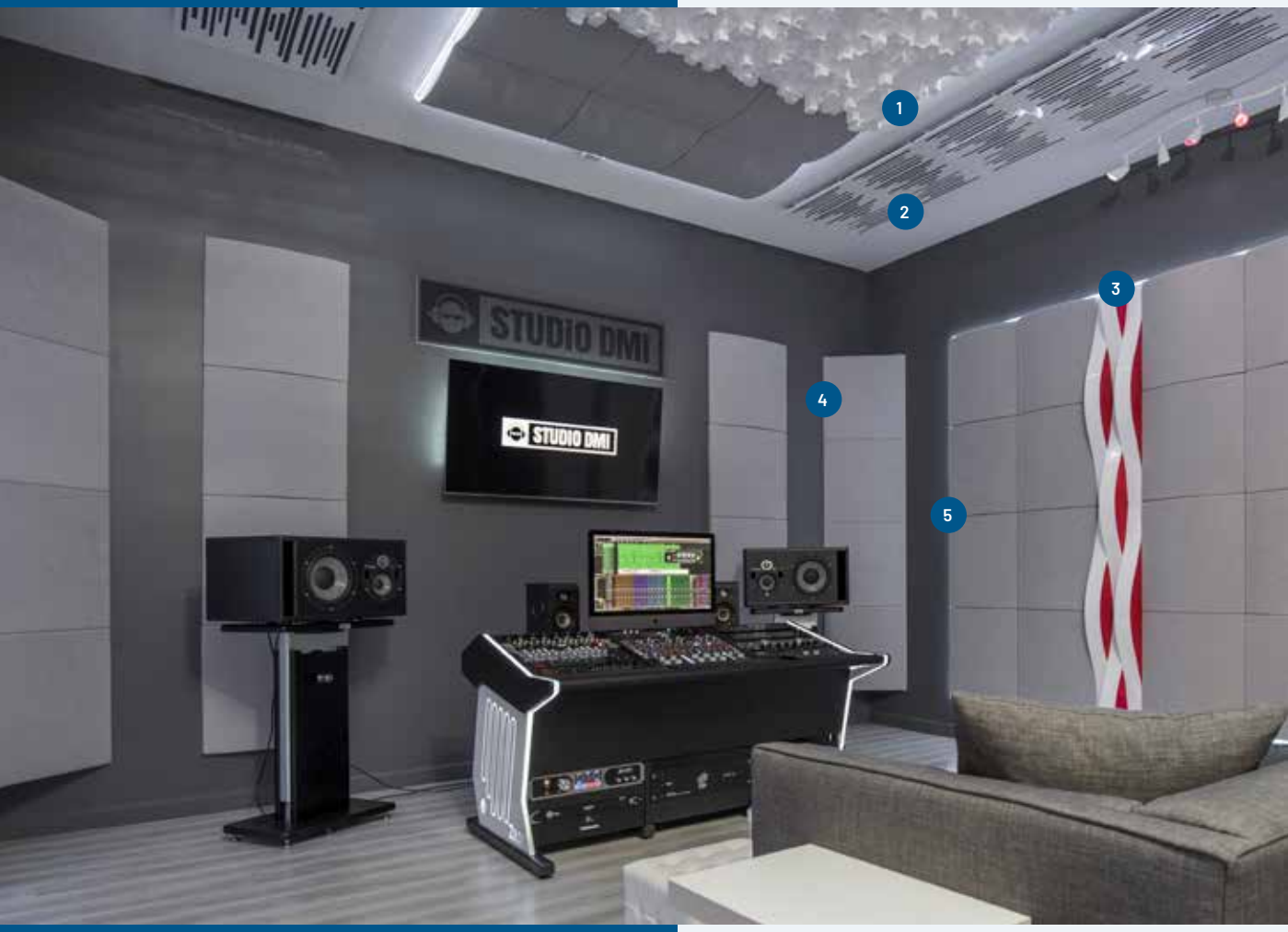

In Control Rooms, there are three main **sound field anomalies** that are likely to occur and should be properly addressed.

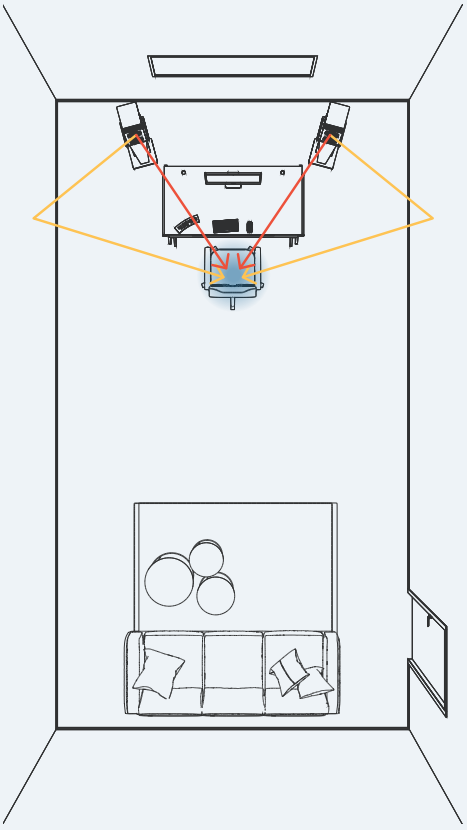

*Figure 8*: ***Comb-Filter effects***

## Comb-Filter Effects

When the direct sound is combined with its reflection a comb-filter is produced, with characteristic nulls and peaks in the frequency response.

During small periods where an almost steady state of speech and music signals may occur, some frequencies may be cancelled or enhanced by the comb-filter effect.

This, of course, compromises the correct sound signal (and respective frequency spectrum) perception and may raise doubts on what one is or isn't listening.

It should be noted that by treating first reflections (using sound absorption to remove energy from them) one is already addressing comb-filter effects.

# Flutter Echoes

Flutter echoes arise due to repeated sound reflections caused by sound waves traveling between parallel reflective surfaces such as walls, floor and ceiling.

This compromises the correct perception of the sound signal and therefore should be properly addressed in critical listening spaces.

It should be noted that by treating first reflections and reverberation time one is also minimising issues related with flutter echoes.

An appropriate distribution of the acoustic treatment throughout the room and avoidance of parallel untreated surfaces will contribute to minimising such defects.


*Figure 10*

1. *Cinema Round Premium*
2. *Super Bass Extreme Ultra*
3. *Flexi Wave Ultra*

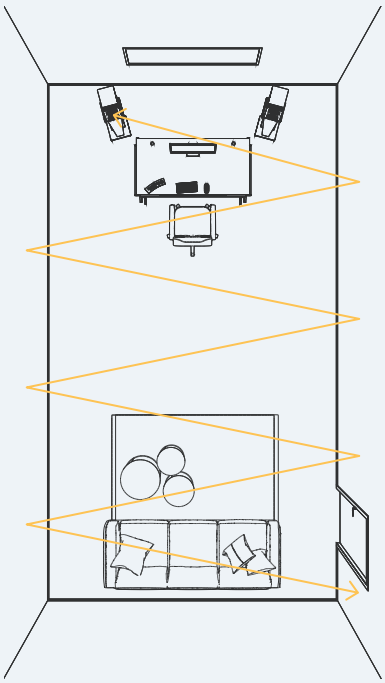

*Figure 9: **Flutter echoes***

# Room Modes

In small rooms such as Control Rooms, the correct perception of sound at low frequencies may be compromised due to room modes.

Room modes may contribute to the excessive attenuation or accentuation of certain low frequencies, in specific regions of the room.

This phenomena can occur along all three directions of a space (i.e. length, width and height).

Room modes may be controlled by using Bass Trap solutions.

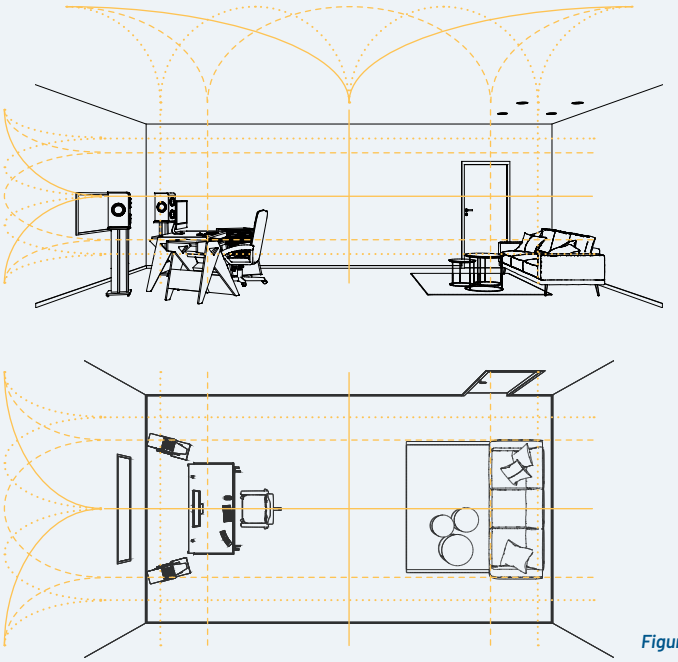

*Figure 11: Room modes*

# Solutions

In order to achieve proper acoustic conditions within a Control Room, two acoustic treatment solutions are being proposed on this white paper.

1

**The Efficient Solution**
An accessible but effective acoustic treatment solution that responds to the specific needs of a space while respecting budgetary and aesthetic constraints.

2

**The Professional Solution**
A high quality proposal for a trully reliable professional audio studio acoustic treatment, featuring the best solutions engineered by Vicoustic for high demanding control rooms.

This document is based on **best practice guidelines and recommendations** (such as AES - Audio Engineering Society, ITU-R - International Telecommunication Union Recommendations, etc.)

It should be noted that this document presents **general guidelines for acoustic treatment**.

Sound insulation and more complex situations may require special attention and advice (for further help please contact sales@vicoustic.com).

1

# **The Efficient** Solution

A solution based in sound absorbing panels combined with diffusers, strategically placed in the walls and ceiling, and bass traps in the corners.

***Figure 12:*** ***Front wall view***

1. *Flat Panel VMT with VicSpacer Plus*
2. *Cinema Piano VMT*
3. *Wavewood Ultra Lite*
4. *Mega Bass Trap VMT*


**Front wall view**

*Figure 13*: ***Back wall view***

1. *Flat Panel VMT with VicSpacer Plus*
2. *Multifuser DC3*
3. *Wavewood Ultra Lite*
4. *Mega Bass Trap VMT*


**Back wall view**

2

# **The Professional** Solution

**This solution is aimed for high performance**, by combining sound absorbers and diffusers in the walls and ceiling, with large bass traps in the corners and a suspended solution on top of the mixing table.

*Figure 14*: ***Front wall view***

1. *Cinema Line*
2. *Flexi Wave Ultra*
3. *Flat Panel VMT with VicSpacer Plus and Suspension Kit, with an extra layer of VicPET Wool*
4. *Mega Bass Trap VMT XXL*


**Front wall view**

*Figure 15*: ***Back wall view***

1. *Flat Panel VMT with VicSpacer Plus*
2. *Multifuser DC3*
3. *Cinema Piano VMT*
4. *Multifuser Wood MKII 64*
5. *Mega Bass Trap VMT XXL*
6. *Flexi Wave Ultra*


**Back wall view**

# **How do these solutions deal** with the room acoustics?

# Step 1 **Reverberation Time Optimization**

**In both solutions, RT is being optimized throughout all frequency spectrum.**

The table below presents the products used in each of the solutions. This RT optimization will maximize speech intelligibility.

| Solution | Low Frequencies | Medium and High Frequencies |
|---|---|---|
| **Efficient** | Mega Bass Trap VMT on the corners. | Cinema Piano VMT, Flat Panel VMT with VicSpacer Plus, Multifuser DC3 and Wavewood Ultra Lite on the walls and ceiling.<br>Mega Bass Trap VMT on the corners. |
| **Professional** | Mega Bass Trap VMT XXL on the corners. | Cinema VMT Line, Flat Panel VMT with VicSpacer Plus, Flexi Wave Ultra, Multifuser Wood MKII and Multifuser DC3 on the walls and ceiling.<br>Mega Bass Trap VMT XXL on the corners. |

The graphic below presents the calculated RT for both untreated and treated room*, for the two different proposed solutions.

These predicted values are meant to be used as a guidance to understand the benefit of the acoustic treatment that is being proposed.

It should be noted that if smaller rooms are considered, the RT is likely to have lower values than the ones presented in the images. If different finishes are considered the RT may increase or decrease depending on the finishes.

**Reverberation Time (RT) Prediction for Efficient and Professional Solutions**
Acoustic Treatment vs Recommended Values

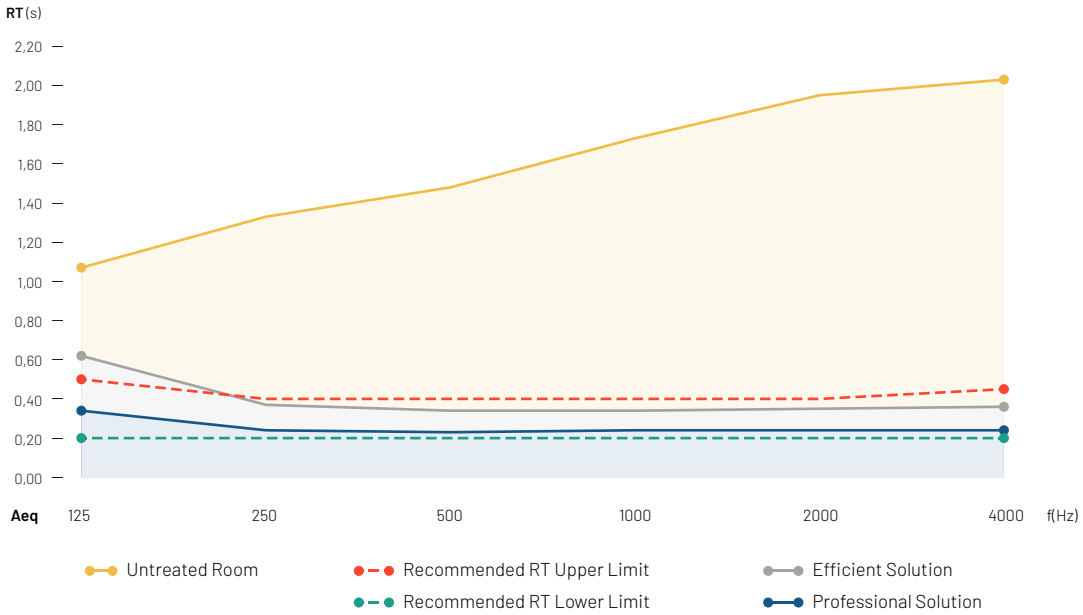


** For these RT calculations, we considered a 4,3 (W) x 7,6 (L) x 2,7 (H) m room, with the following finishes: walls and ceiling made of plasterboard and a wooden floor with a carpet.*

# Step 2
# First and Late Reflections

## Efficient solution

In the Efficient solution, First reflections are absorbed with broadband absorbers, such as **Cinema Piano VMT** and **Flat Panel with VicSpacer Plus** for wall treatment and **Flat Panel with VicSpacer Plus** for ceiling treatment.

This will help decreasing First Reflection's level at least 10 dB below the level of the direct sound.

Late reflections are absorbed with broadband absorbers, such as **Flat Panel with VicSpacer Plus** behind the mixing position. This will help to evenly decrease the room's Reverberation Time.

In addition, to give the sense of spaciousness it is also good to have some diffusing elements in the back part of the room, such as **Multifuser DC3**.

*Figure 16: **First and Late Reflections from Walls** - Broadband absorber such as Flat Panel with VicSpacer Plus should be used in first reflection points. To control Late Reflections, Acoustic absorbers such as Flat Panel VMT with VicSpacer Plus behind the mixing position and Acoustic Diffusers such as Multifuser DC3 should be considered.*

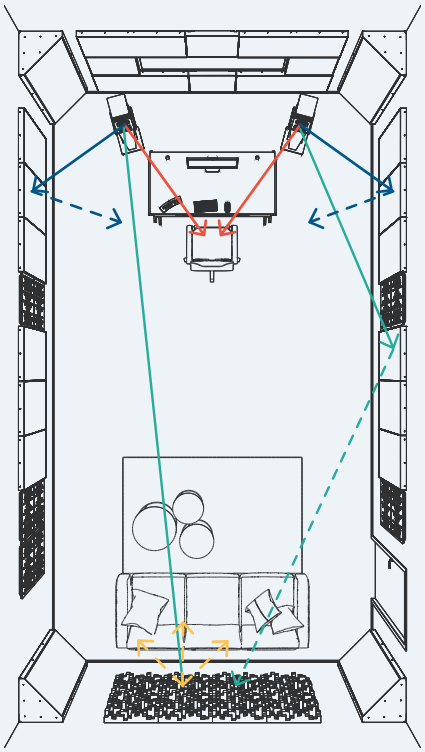

Direct Sound

First Reflections (absorbed)

Late Reflections (absorbed)

Late Reflections (diffused)

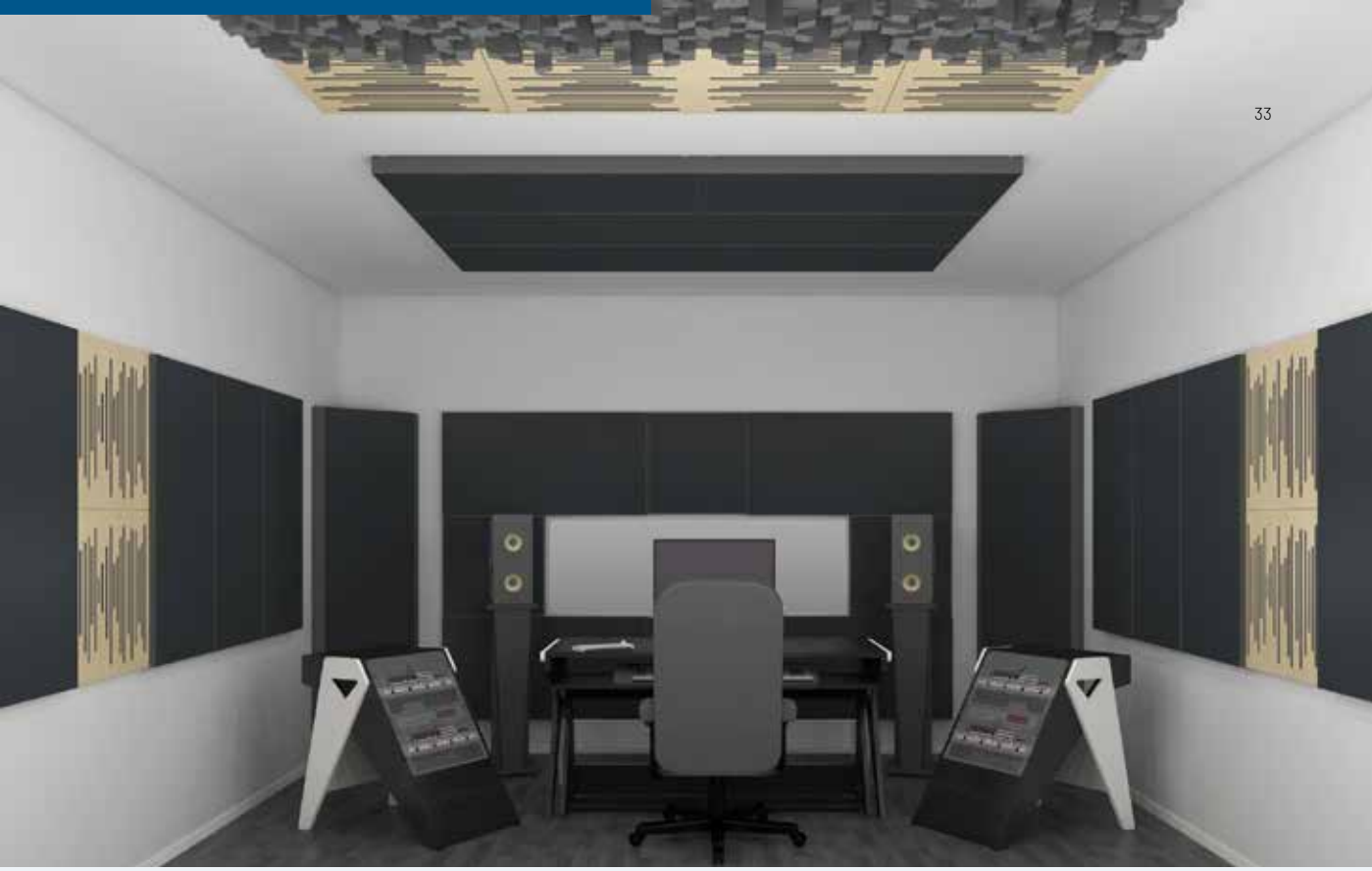

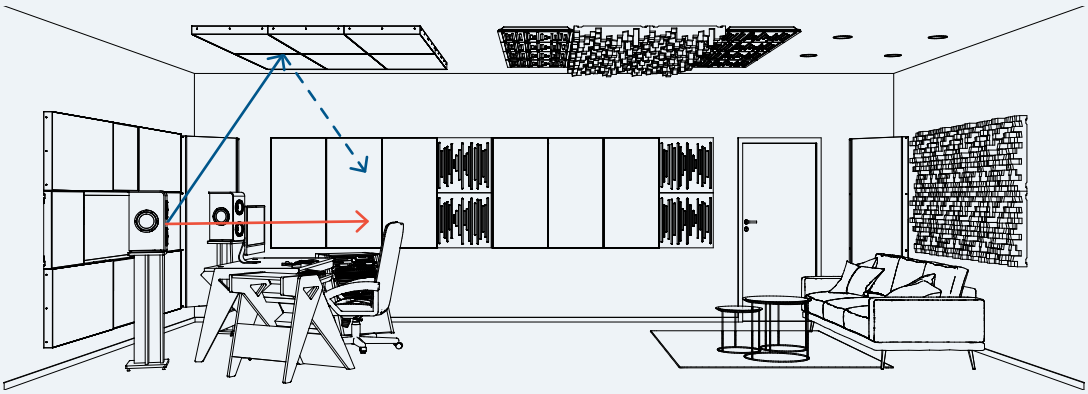

*Figure 17*: ***First Reflections from Ceiling*** *- Broadband Absorbers such as Flat Panel with VicSpacer Plus should be installed over the listening position to deal with first ceiling reflection points.*

Direct Sound

First Reflections (absorbed)

# Step 2
# First and Late Reflections

## Professional solution

In the Professional solution, first reflections are absorbed with broadband absorbers, such as **Cinema Forte VMT**, **Cinema Fortissimo VMT** and **Flat Panel With VicSpacer Plus** for wall treatment and **Flat Panel with VicSpacer Plus with Suspension Kit** for ceiling treatment.

This will help decreasing First Reflection's level at least 10 dB below the level of the direct sound.

Late reflections are absorbed with broadband absorbers, such as **Cinema Forte VMT** and **Cinema Fortissimo VMT**. This will help to evenly decrease the room's Reverberation Time.

In addition, to give the sense of spaciousness, diffusing elements, such as **Multifuser Wood MKII**, are presented for the back part of the room.

*Figure 18: **First and Late Reflections from Walls** - Broadband absorbers such as Cinema Fortissimo VMT and Cinema Forte VMT should be used in first reflection points. Late reflections are absorbed with broadband absorbers, such as Cinema Forte VMT and Cinema Fortissimo VMT.*

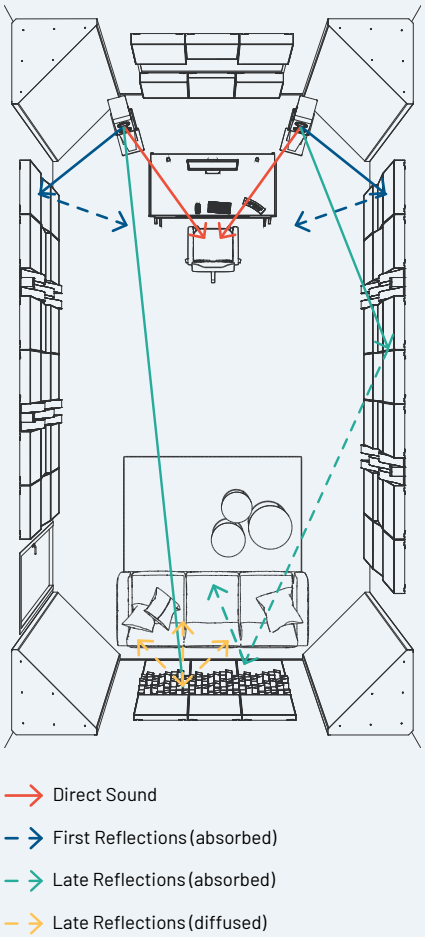

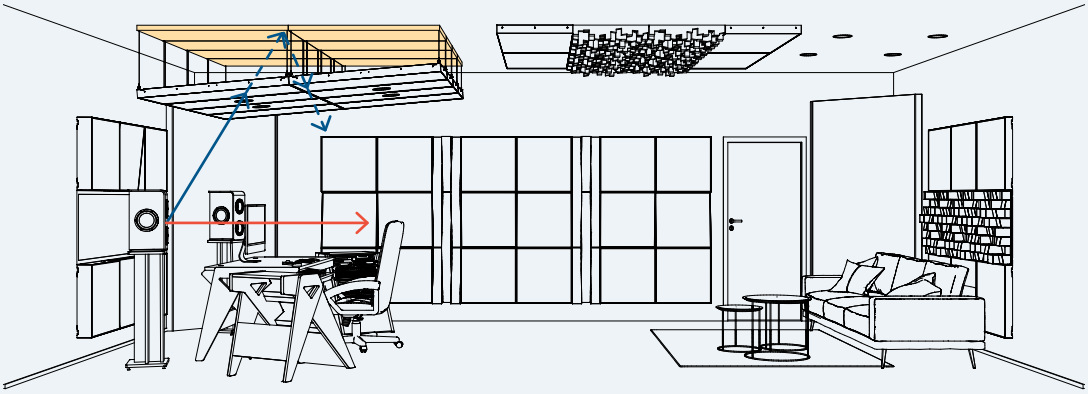

*Figure 19: **First Reflections from** Ceiling - Broadband Absorbers such as Flat Panel with VicSpacer Plus with Suspension Kit should be installed over the listening position to deal with first ceiling reflection points.*

Direct Sound

First Reflections (absorbed)

If one uses a cloud made of Flat Panel With VicSpacer Plus with Suspension Kit over the listening position, a way to increase its performance in the low frequency region is to consider the installation of Flat Panel PET in the air gap between the cloud and the structural ceiling (highlighted in yellow).

**Tip:** It is very easy to integrate light on Flat Panel With VicSpacer Plus, just as shown in the image.

# Step 3
# **Sound Field Anomalies**

## Comb-Filter Effects

Treating first reflections using **Flat Panel VMT with VicSpacer Plus** or **Cinema VMT Line** to take energy from them will also help to address comb-filter effects.

## Flutter Echoes

By using **Flat Panel VMT with VicSpacer Plus** or **Cinema VMT Line** to treat first reflections in order to remove energy and deal with the reverberation time, one will also be dealing with flutter echoes issues.

## Room Modes

Room Modes are being treated by including **Mega Bass Trap VMT** (Efficient solution) and **Mega Bass Trap VMT XXL** (Professional solution) on room corners to deal with low-frequencies.

*Figure 20*

1. *Flexi Wave Ultra*
2. *Super Bass Extreme Ultra*
3. *Cinema Round Premium*
4. *Wavewood Ultra Lite*

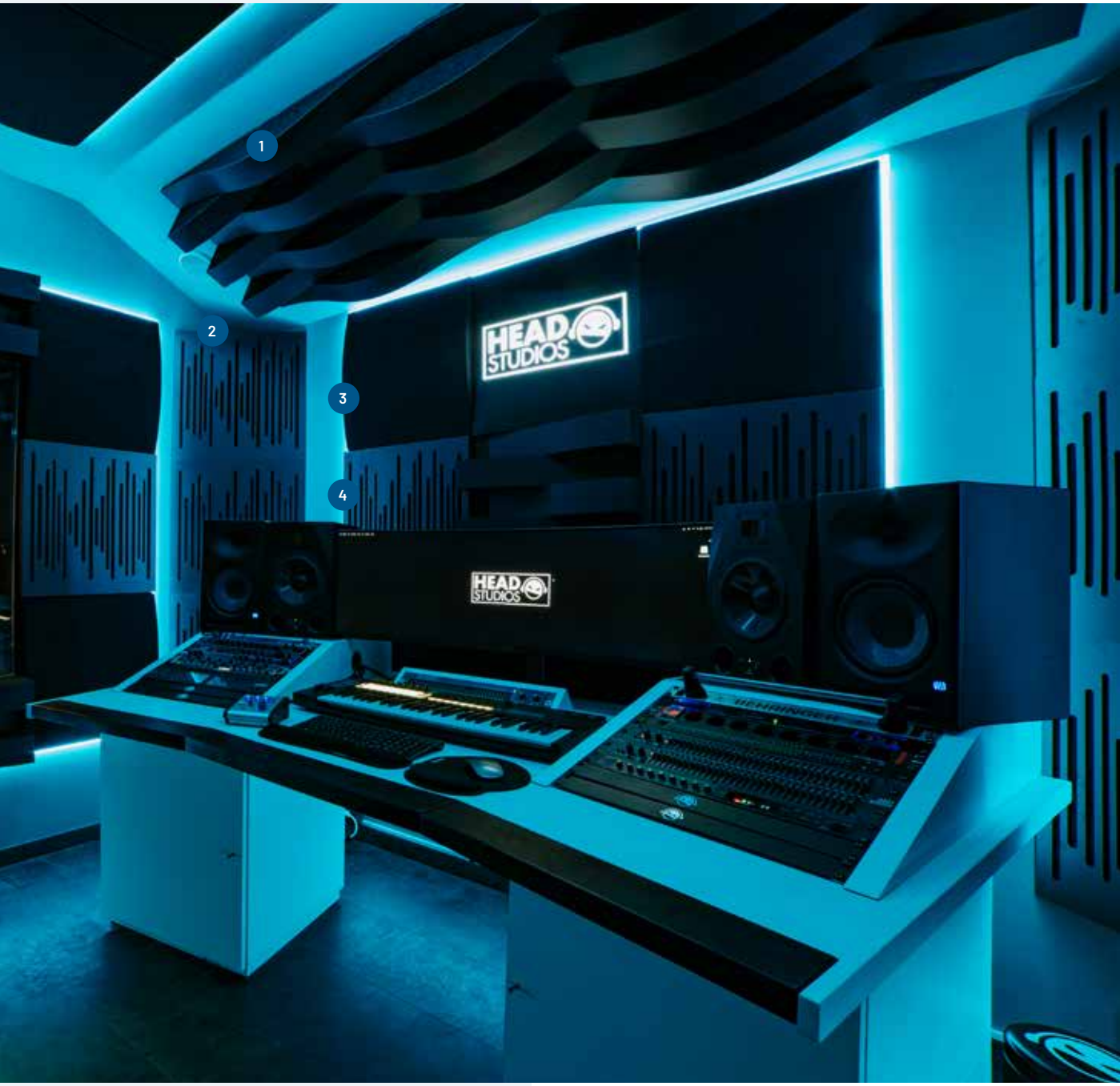

# List of **materials needed**

# Products included in the **Efficient solution**

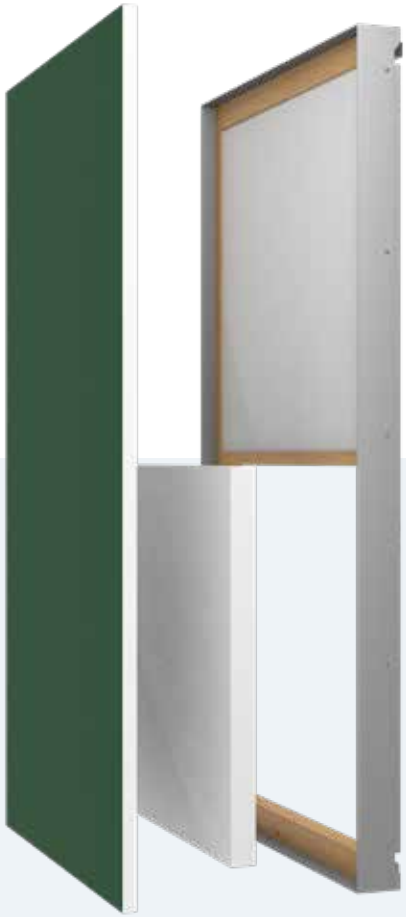

## **Flat Panel VMT** with **VicSpacer Plus**

**This is a broadband panel that will help to achieve a balanced Reverberation Time, while contributing to control first reflections and speaker boundary interference.**

By using one layer of PET to increase sound absorption, it will help to deal with the most demanding acoustic challenges, allowing anyone to treat the entire control room, with a minimum quantity of Flat Panel VMT covering the walls' surfaces.

The fixation system used by VicSpacer Plus makes Flat Panel VMT compatible with the VicFix fixation system, an easy way to apply to the wall. It also makes it possible to use it as Bass Trap, by placing it in the corners, using VicFix Corner Plus.

***Figure 21*** *(previous page)*

1. *Multifuser DC3*
2. *Super Bass Extreme Ultra VMT*
3. *Cinema Round Premium*
4. *Flat Panel VMT (customized) with VicSpacer Plus*

*Figure 22*

1. *Flexi Wave Ultra*
2. *Cinema round Premium*
3. *Wavewood Ultra Lite*


## **Cinema Piano** VMT

This is a broadband panel that will help to control First Reflections, Speaker Boundary Interference and also to achieve a balanced Reverberation Time.

## **Multifuser** DC3

This is a bi-dimensional diffuser that it is being proposed for the ceiling and back part of the room and will help to prevail a sense of spaciousness inside the room.

## Mega Bass Trap
VMT

This is a new Broadband bass trap, which will help to control the low end.

## Wavewood Ultra
Lite

Vicoustic's flagship acoustic panel has been specifically developed to treat acoustic problems without destroying the room's ambience, or over-deadening the sound

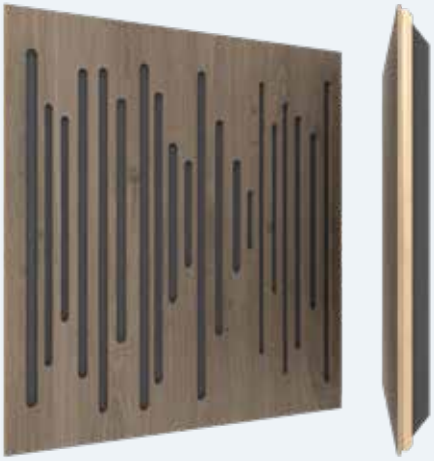

# Products included in the **Professional solution**

## **Cinema** Line

Cinema Piano VMT, Cinema Forte VMT and Cinema Fortissimo VMT are broadband panels. They will help to control First Reflections; Speaker boundary Interference and achieve a balanced Reverberation Time.

## **Flat Panel VMT** with **VicSpacer Plus**

This is a broadband panel that will help to achieve a balanced Reverberation Time, while contributing to control first reflections and speaker boundary interference.

## **Flexi Wave** Ultra

This is a hybrid panel and will help to prevail a sense of spaciousness inside the room, which is normally valued by Audio Engineers since it makes easy to translate from a control room to a residential environment.

## **Multifuser Wood** MKII

This is a QRD diffuser, it is being proposed for the back part of the room  and similarly to Flexi Wave Ultra will help to prevail a sense of spaciousness inside the room.

## **Multifuser** DC3

This is a bi-dimensional diffuser that it is being proposed for the ceiling and will help to prevail a sense of spaciousness inside the room.

## **Mega Bass Trap** VMT XXL

This is a new Broadband bass trap with a huge performance from 50Hz onwards, that will help to control the low end.

# Quantities Needed

The solutions presented in this White Paper were developed for a room with 4,3 (W) x 7,6 (L) x 2,7 (H) m, with the following finishes: walls and ceiling made of plasterboard and wooden floor with a carpet. **The quantities presented below refer to this example.**

If the dimensions of your room differ considerably from this example, **you can use the quantities presented below as a baseline and adapt them to your scenario.** As a rule of thumb, to determine how many panels your room should have, divide your room's volume by the volume of the room in the example, and multiply the result by the quantities of panels mentioned below.

**The Efficient** Solution

| **Products** | **Quantities** (un) |
|---|---|
| Cinema Piano | 4 |
| Flat Panel VMT (1190 x 595 x 20 mm) with VicSpacer Plus | 22 |
| Wavewood Ultra Lite | 24 |
| Multifuser DC3 | 16 |
| Mega Bass Trap VMT | 4 |


*Figure 23*

1. *Multifuser DC3*
2. *Flexi Wave Ultra*
3. *Super Bass Extreme Ultra*
4. *Cinema Round Premium*

If the finishes of your room differ considerably from the finishes used in this examples, in case you have more reflective finishes than the ones mentioned, as a rule of thumb consider using more absorption elements where space is available.

On the contrary, **if you have finishes that are more absorptive than the ones mentioned in the example, consider using less absorbing materials and replace them by diffusers**.

For further help please contact:
sales@vicoustic.com

## **The Professional** Solution

| Products | Quantities |
|---|---|
| Cinema VMT Piano + Forte + Fortissimo | 6 + 28 + 15 |
| Flexi Wave Ultra 120 | 12 |
| Flexi Wave Ultra 60 | 12 |
| Multifuser Wood MKII 64 | 3 |
| Flat Panel VMT (1190 x 595 x 20 mm) with VicSpacer Plus + VicSpacer Suspension Kit + Flat Panel PET | 12 + 8 + 8 |
| Multifuser DC3 | 8 |
| Mega Bass Trap VMT XXL | 4 |

# **Flat Panel** VMT

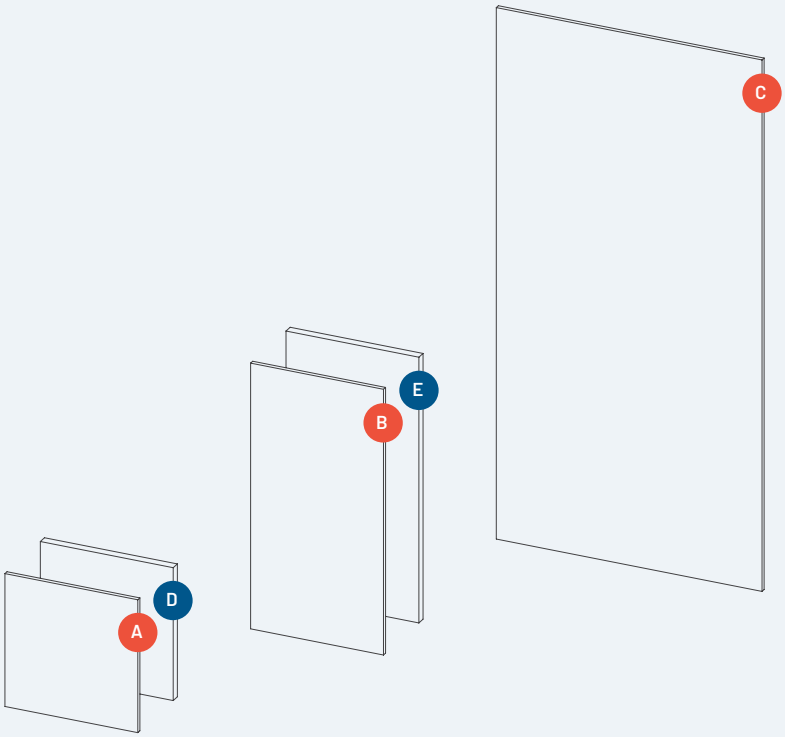


## Features

- Light weight
- Easy to Install
- Easy to clean and maintain
- High Performance in medium and high frequencies

## Dimensions*

- A 595 x 595 x 20 mm / 23.4" x 23.4" x 0.8"
- B 1190 x 595 x 20 mm / 46.8" x 23.4" x 0.8"
- C 2380 x 1190 x 20 mm / 93.7" x 46.8" x 0.8"
- D 595 x 595 x 40 mm / 46.8" x 23.4" x 1.6"
- E 1190 x 595 x 40 mm / 46.8"x23.4"x1.6"

## Package Information

- A B 8 or 4 units/box
- C 8, 4 or 2 units/box
- D E 8 units/box

** Please notice that the dimensions of this panel have a tolerance of +/- 2 mm*

## Technical Information

**Raw Material**

VicPET Wool

**Acoustic Properties**

Medium and High Frequencies Absorption

**NRC:** 20 mm: 0,55; 40 mm: 0,70

**Fire Rate**

20 mm: Europe: Euroclass B -s2, d0; USA: Class A (ASTM-E84); Canada: CAN/ULC S102, Flame Spread Rating: 5, Smoke Developed Classification: 115; 40 mm: Europe: Euroclass B - s2, d0; USA: Class A (ASTM-E84); Canada: N/A

**Installation/Accessories**

Velcro; Flexi Glue Ultra; AluFrame VMT T; VicSpacer; VicSpacer Plus

## Available Finishes

**Collections**

- Natural Stones
- Natural Woods
- 3D
- Concrete
- Nature
- Tiles

**VMT Colors**

Natural White, Black, Grey, Light Grey

Musk Green, Moss Green, Blue, Bondi Blue

Beige, Brown, Pumpkin Orange, Coral

INDOOR ADVANTAGE GOLD BUILDING MATERIALS

OEKO-TEX® CONFIDENCE IN TEXTILES STANDARD 100

# **VicSpacer** / Plus

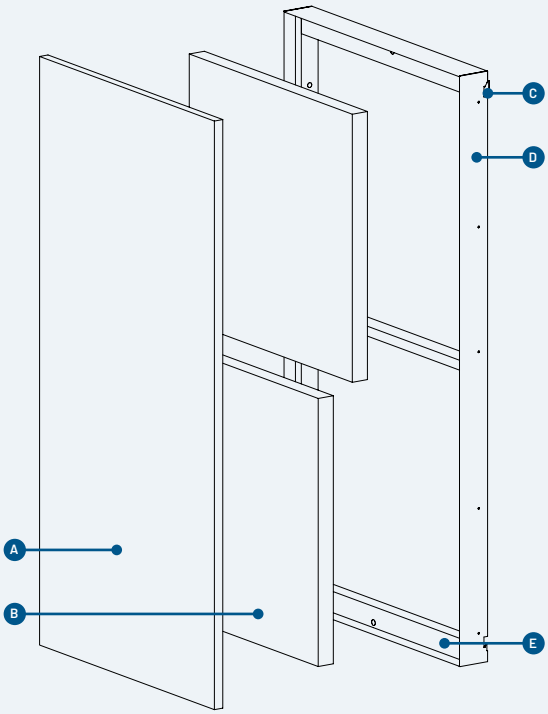


- **A** Flat Panel VMT (1190 × 595 × 20 mm, not included)
- **B** VicPET Wool (542 × 555 × 40 mm, only included in VicSpacer Plus)
- **C** VicFix Mini
- **D** Coated steel frame
- **E** Wood frame

## Dimensions*

599 × 1194 × 66 mm / 23,6" × 47,0" × 2.6"

## Package Information

4 unit/box

** Please notice that the dimensions of this panel have a tolerance of +/- 2 mm*

## Colors

White Matte | Black Matte | Grey Matte

## Technical Information

**Raw Material**

VicPET Wool, Wood and Lacquered Steel

**Acoustic Properties****

Medium and High Frequencies Absorption

**NRC:** VicSpacer: 0,85; VicSpacer Plus: 0,95

*** With Flat Panel VMT 20mm (not included)*

**Installation/Accessories**

VicFix Mini (included); VicFix J Profile; VicSpacer Suspension Kit NEW

## Main features

- It makes Flat Panel VMT compatible with the VicFix J profile system
- Compatible with all sizes of 20mm Flat Panel VMT, including XXL panels (2380 × 1190 × 20 mm)
- Covers the white sides of Flat Panel VMT
- Improves substantially the acoustic performance of Flat Panel VMT
- Can be installed in the ceiling[1] and corners[2], acting as Bass Trap
- Also available in XXL size (2384 × 1194 × 66 mm)

*[1] For ceiling installation do not use the VicFix Mini supplied with the product. Use the VicFix J Profile 2m (sold separately) or fix the panels with screws.*

*[2] For corner installation use VicFix Corner and VicFix 80 mm (sold separately).*

# **Cinema** Line

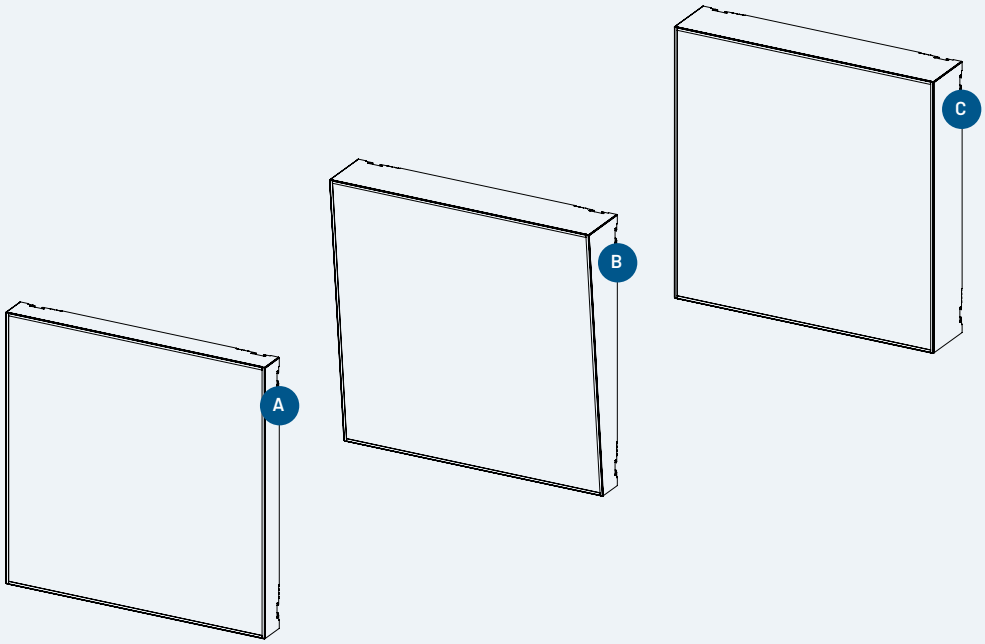


## Dimensions*

**A Cinema Piano**
595 × 595 × 60 mm
/ 23.4″ × 23.4″ × 2.36″

**B Cinema Forte**
595 × 595 × 120 mm
/ 23.4″ × 23.4″ × 4.72″

**C Cinema Fortissimo**
595 × 595 × 120 mm
/ 23.4″ × 23.4″ × 4.72″

## Package Information

2 unit/box

** For each panel. Please notice that the dimensions of this panel have a tolerance of +/- 2 mm*

## Technical Information

**Material**
VicPET Wool, ViCycle, MDF and Lacquered Steel

**Acoustic Properties**
Broadband Absorption
**NRC:** 0,95

**Fire Rate**
Tests in progress

**Installation/Accessories**
VicFix Mini (included);
VicFix J Profile; VicFix Corner

## Colors

White
Black
Grey
Calacatta Cremo
Grey Stone
Concrete 1

INDOOR ADVANTAGE GOLD BUILDING MATERIALS

# **Flexi Wave** Ultra

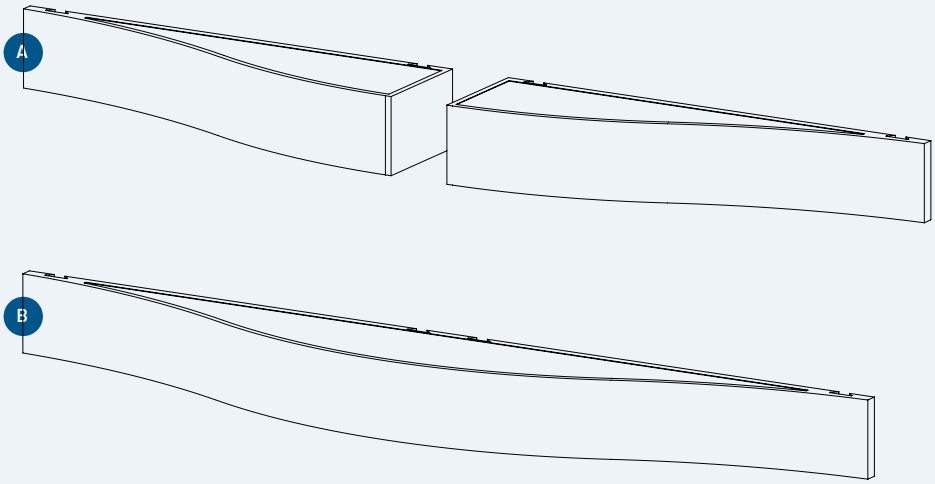


## Features

- Acoustic absorption and diffusion on a single panel
- Polyurethane free
- VMT technology
- High quality MDF with anti-scratch melamine
- PET absorption inside
- Professional fixation system
- Anti-alergenic
- VOCs free
- Customizable side

## Technical Information

**Raw Material**

VicPET Wool, MDF and High-Pressure Laminate (HPL)

**Acoustic Properties**

Medium Frequencies Absorption and Diffusion

**NRC:** 0,70

**Installation**

VicFix J Profile 80 mm (included); VicFix J Profile; Flexi Glue Ultra

**Fire Rate**

Tests in progress

## Wood Colors

White Matte
Black Matte
Locarno Cherry
Natural Oak
Metallic Copper
Metallic Gold
Dark Wenge
Brown Oak

## Dimensions*

1. 595 x 100 x 150 mm / 23.4" x 3.9 x 5.9"
2. 1195 x 100 x 150 mm / 46.8" x 3.9" x 5.9"

## Package Information

6 unit/box

** For each panel. Please notice that the dimensions of this panel have a tolerance of +/- 2 mm*

# **Multifuser** DC3

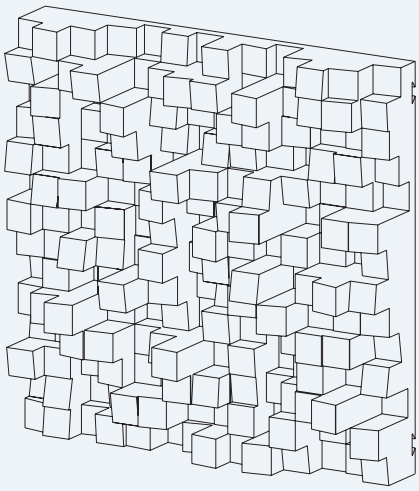

## Dimensions*

595 x 595 x 147 mm

/ 23.4" x 23.4" x 5.8"

## Package Information

6 unit/box

** For each panel. Please notice that the dimensions of this panel have a tolerance of +/- 2 mm*

## Technical Information

**Material**

EPS (Expanded Polystyrene)

**Acoustic Properties**

Medium frequencies Diffusion

**NRC:** 0,20

**Fire Rate**

Europe: Euroclass F

**Installation/Accessories**

VicFix J Mini (included); VicFix J Profile; Flexi Glue Ultra

## Colors

White Black

## Aplications

- Listening Rooms
- Home Theaters
- Recording and Broadcast Studios
- Post Production Studios
- Performance Spaces
- Rehearsal Rooms
- Conference and Teleconference Rooms
- Public Spaces
- Auditoriums, etc.

# **Multifuser Wood** MKII

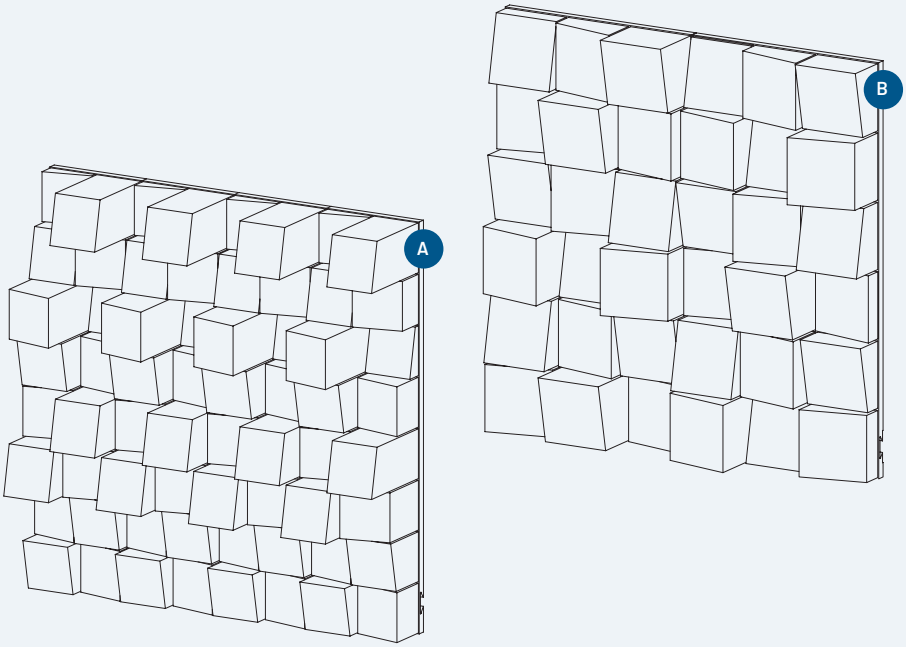


## Dimensions*

**A Multifuser Wood MKII 64**
595 x 595 x 135 mm
/ 23.4" x 23.4" x 5.3"

**B Multifuser Wood MKII 36**
595 x 595 x 75 mm
/ 23.4" x 23.4" x 2.9"

## Package Information

1 unit/box

** For each panel. Please notice that the dimensions of this panel have a tolerance of +/- 2 mm*

## Technical Information

**Raw Material**
Wood

**Acoustic Properties**
Diffusion
**NRC:** 36: 0.25; 64: 0.35

**Fire Rate**
Europe: Euroclass E
USA: Class B (ASTM-E84)

**Installation**
VicFix J Profile 80 mm (included);
VicFix J Profile

## Wood Colors

White Matte
Black Matte
Natural Wood
Metallic Copper
Metallic Gold

## Applications

- Listening Rooms
- Home Theaters
- Recording and Broadcast Studios
- Post Production Studios
- Office
- Rehearsal Rooms
- Conference and Teleconference Rooms
- Public Spaces
- Auditoriums
- And many more

# **Wavewood Ultra** Lite

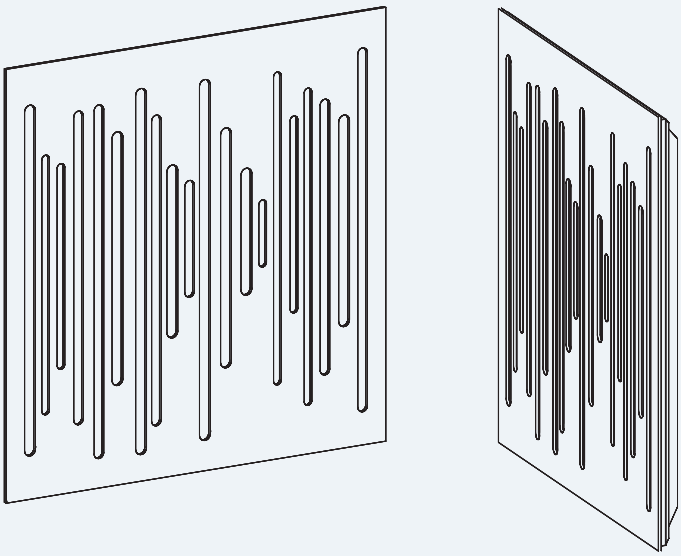

## Dimensions*

595 × 595 × 45 mm
/ 23.4" × 23.4" × 1.77"

## Package Information

8 units/box

** For each panel. Please notice that the dimensions of this panel have a tolerance of +/- 2 mm*

## Technical Information

**Material**

Polyurethane Foam, MDF,
High-Pressure Laminate (HPL)

**Acoustic Properties**

Medium Frequencies Absorption
**NRC:** 0,75

**Fire Rate**

Tests in progress

**Installation/Accessories**

Flexi Glue Ultra

## Wood Colors

White Matte
Black Matte
Natural Oak
Locarno Cherry
Brown Oak
Dark Wenge

# **Mega Bass Trap** VMT / XXL

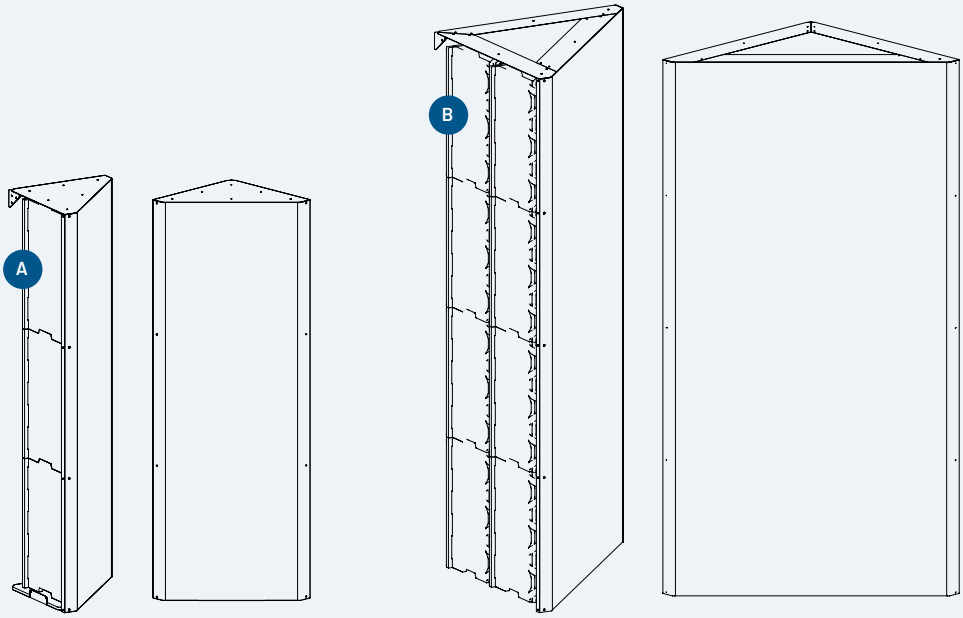


## Dimensions*

**A Mega Bass Trap VMT**
680 × 1788 × 384 mm
/ 26,8″ × 70,4″ × 15,1″

**B Mega Bass Trap VMT XXL**
1279 × 2380 × 683mm
/ 50.3″ × 93.7″ × 26.9″

## Package Information

2 units/box

** For each panel. Please notice that the dimensions of this panel have a tolerance of +/- 2 mm*

## Technical Information

**Raw Material**
VicPET Wool, Wood
and Lacquered Steel

**Acoustic Properties**
Broadband Absorption; Bass Trap

**Fire Rate**
Tests in progress

**Installation/Accessories**
Screwed to the wall;
Mega Bass Trap VMT Horizontal Kit
(only for Mega Bass Trap VMT)

## Finishes

**VMT Colors**

Natural White · Black · Grey · Light Grey · Beige

**Frame Colors**

White Matte · Black Matte · Grey Matte

# Glossary

**Comb-Filter Effects** – Characteristic null and peaks that occur in the sound frequency response due to combination of the direct sound with its reflection coming from untreated surfaces.

**dB (decibel)** – The scale on which sound pressure level is expressed. It is defined as 20 times the logarithm of the root-mean-square pressure of the sound field and reference pressure ($2 \times 10^{-5}$ Pa).

**Direct Sound** – Sound that arrives at the listener's position directly from the sound source, i.e. without being reflected from any objects or surface.

**First Reflections** – Normally defined as the sound reflections that reach the listening position up to approximately 20ms after the direct sound.

**Flutter Echoes** – Repeated sound reflections caused by sound waves travelling between parallel reflective surfaces such as walls.

**Reverberation** – An acoustical phenomenon that occurs in enclosed spaces, when sound persists in that space as a result of repeated reflection or scattering from surfaces enclosing the space or objects within it.

**Reverberation Time (s)** – A measure of the degree of reverberation in a space. It is equal to the time required for the level of a steady sound to decay by 60 dB after it has been turned off.

**Room Modes** – At specific frequencies, called room resonance frequencies, standing waves are created within rooms. These frequencies depend on the dimensions and shape of the room. This group of resonance frequencies are normally referred to as room modes. When a sound source generates sound with frequencies equal or close to the room resonance frequencies, the room response will be enhanced and patterns of maximum pressure levels and minimum pressure levels will be produced. The shape of these patterns differs with the room resonance frequency.

**Sound Absorption** – The portion of the sound energy that is absorbed and not returned when a sound wave hits a surface.

**Sound Diffusion** – Sound diffusion occurs when a sound wave hits a complex surface such as a diffuser and its energy is distributed in many directions.

**Sound Reflection** – The portion of the sound energy that is returned when a sound wave hits a surface.

**Standing Waves** – A standing wave is originated from the interaction of two sound waves with equal frequency and amplitude but travelling in opposite directions. Unlike the travelling waves, the standing waves do not cause a net transport of energy, since the two waves that form it are carrying equal energy in opposite directions. The resulting standing wave alternates between maximum and zero amplitude.

# **Vicoustic**
# Perfecting Acoustics Sustainably

## Vicoustic is a company in constant evolution with strong international expression, represented in more than 80 countries

Vicoustic understands sound - and we know what makes a truly exceptional acoustic and audio experience. Being at the forefront of acoustic technology, we combine engineered systems with stunning design to bring you sound that is free of compromises, but full of high quality performance.
A leading force in the industry, founded in 2007, Vicoustic is found in over 80 countries around the world. We understand the unique sound dynamics of a room or venue. So whether it's a Home Cinema, Hi-Fi room to a professional sound system for radio and television, our expertise for peak acoustic performance is second-to-none.
The products from Vicoustic deliver clever and innovative solutions to meet the demands of spaces which require a sophisticated soundscape. Taking on board the high standards of our customers, we continuously strive to manufacture products of superior functionality, adaptability, but all the while with a sustainable and environmentally conscious mind-set.

## From conception through to completion, we work closely with architects, engineers and designers to deliver a project successfully irrespective of complexity.

Our project team includes senior acoustic engineers and designers that are experts in taking you on your acoustic and design needs. The pioneering hardware and software tools we have engineered have proved to be very reliable to support the integration of acoustic treatment and sound insulation solutions through a new-build or a refurbishing project.
Our Research and Development Team is also available to develop customized products to satisfy your needs.
Our customers will also be supported by our Sales, Marketing and Logistics teams to assist with transportation, communication and all information that may be required: pricing; installation guides; catalogues; etc.
Together we have proven that we can provide high levels of value to see our customers through the whole process of installing acoustic solutions.
This includes reliable and effective recommendations of products and support services throughout your whole project process from conception through to completion.

# Vicoustic **Project Assistance**

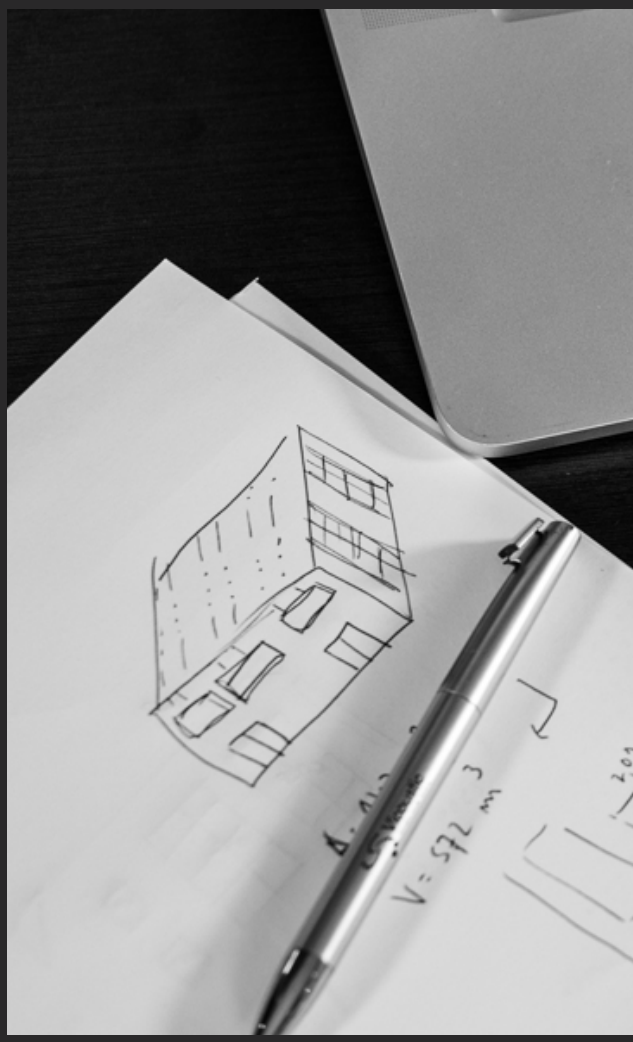

**We know that each space deserves and requires individual acoustic needs..**

Our Project Team includes Senior Acoustic Engineers and Designers that are experts in taking on your acoustic and design needs. From conception through to completion, we work closely with architects and designers to deliver a project successfully irrespective of complexity.

The pioneering hardware and software tools we have engineered prove to be very reliable to support the integration of acoustic treatment and sound insulation solutions through a new-build or a refurbishing project.

Our Research and Development Team is also available to develop customized products to satisfy your needs. Our Sales and Marketing team are able to inform you about prices, new products and provide you all necessary product documentation and implementation details.

Together we have proven that we can provide high levels of value adding with reliable and effective recommendations, products and support services throughout your whole project process from conception through to completion.

This ability has provided us a large base of Clients in a relatively short period of time. We are proud in having between our Clients companies such as Sony, BBC, ITV, Facebook, Microsoft and many others.

## We do

- Custom Designed Products
- Room Design Recommendations
- Technical Support

# A Research center for rigorous in-house testing

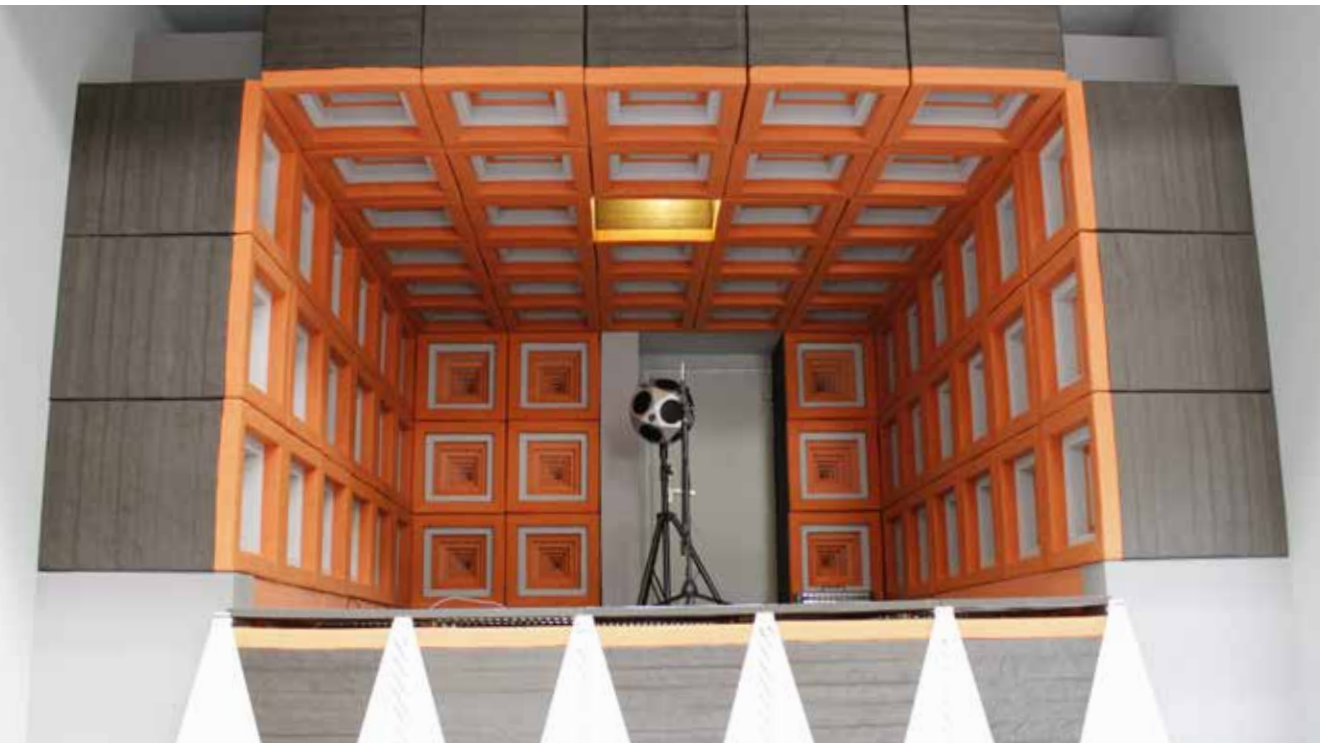

## This is what makes Vicoustic a distinguished brand and leader in its sector

We believe that Vicoustic should constantly be paving the way, innovating and driving sound technologies to ensure that we are not only leading the field, but producing the best acoustics in every space we are acoustically curating. What makes us outliers in the industry is our 'Vicoustic Research Centre', inaugurated in 2012 alongside the Vicoustic HQ. We pride ourselves on developing and continuously advancing our technologies and ways of working to deliver the best product to our customers.

The Research Centre operates on a multidisciplinary platform: the 'Multifunctional Room' and the 'Innovative Acoustic Chamber'. We have a brilliant (and fun!) time using this centre to test our products and investigate and challenge the way we use audio and acoustic technologies.

# Vicoustic **Sustainability Approach**

**In the past decade, Vicoustic has been developing a strong concern in terms of creating new sustainable acoustic solutions**

We are committed to making products in an environmentally friendly way. This is important to Vicoustic and an integral part of our product development.

Following an extensive project looking into the sustainability of our creations, a substantial part of our products are now made using recycled or recyclable materials. Most notably, Vicoustic has increased the use of VicPET Wool.
A non-woven textile with superb acoustic performance, but predominantly made from recycled plastic bottles. 2018 sees a 3rd Vicoustic factory opening, meaning we are more determined than ever to use eco-friendly products in our lines.

But sustainability is not limited to manufacturing. Our aim for a greener product is also in the quality and durability of our creations and we aim for these to have a great, long and lasting life.


COUSTIC

## Production

Strategically located in the largest industrial cluster in Portugal

## Packaging

Each individual panel is inspected, placed in plastic casing and boxed. Production and Logistic enhancements guarantee high quality control and fast expedition

## Shipping

Vicoustic Acoustic Solutions are currently being shipped over 80 different countries worldwide

## Installation

"Out of the box" solutions, easy to install

NORTE 2020
PROGRAMA OPERACIONAL REGIONAL DO NORTE

PORTUGAL 2020

UNIÃO EUROPEIA
Fundos Europeus
Estruturais e de Investimento

**R&D and Logistics Facility**
Avenida do Polo 3, Nº 159, Carvalhosa
4590-137 Paços de Ferreira, Portugal
P (+351) 255 136 746
M (+351) 917 851 019

**Office**
Rua Quinta do Bom Retiro Nº 16, Armazém 9
2820-690 Charneca da Caparica, Portugal
P (+351) 212 964 100

**Info and Sales**
E sales@vicoustic.com

**Project Department**
E projects@vicoustic.com

**Marketing Department**
E marketing@vicoustic.com

www.vicoustic.com

VICOUSTIC
INNOVATIVE ACOUSTIC SOLUTIONS