US Army Corps of Engineers®
JAPAN DISTRICT

MISAWA AIR BASE, JAPAN

DESC 20UX INSTALL ADDITIVE INJECTION SYSTEM

DRAFT

CIVIL
THIS WORK WAS PREPARED BY ME OR UNDER MY SUPERVISION
FRANCIS T. HINO — LICENSED PROFESSIONAL ENGINEER No. 5499-C. HAWAII, U.S.A.
(NAME AND LICENSE)

ARCHITECTURAL
THIS WORK WAS PREPARED BY ME OR UNDER MY SUPERVISION
WARREN TAKETO NAKAMURA — LICENSED PROFESSIONAL ARCHITECT No. AR-4985 HAWAII, U.S.A.
(NAME AND LICENSE)

STRUCTURAL
THIS WORK WAS PREPARED BY ME OR UNDER MY SUPERVISION
STRUCTURAL ENGINEER 一級建築士 (1st Class Kenchikushi) Lic# 169875 EXPIRATION DATE : NONE TAKASHI MIHORI SIGNED
(NAME AND LICENSE)

MECHANICAL FUELS
THIS WORK WAS PREPARED BY ME OR UNDER MY SUPERVISION
STATE OF ALASKA — MATTHEW F. FRITZ ME-14083 03/18/2022 Mechanical Professional
(NAME AND LICENSE)

MECHANICAL HVAC
THIS WORK WAS PREPARED BY ME OR UNDER MY SUPERVISION
MECHANICAL ENGINEER 建築設備士 (Kenchiku Setsubishi) No. 10C2 - 7014PY EXPIRATION DATE : NONE EISAKU HONDA SIGNED
(NAME AND LICENSE)

FIRE PROTECTION
THIS WORK WAS PREPARED BY ME OR UNDER MY SUPERVISION
REGISTERED PROFESSIONAL ENGINEER ROBERT T. BIGGAS FP1427 FIRE PROTECTION STATE OF CALIFORNIA
(NAME AND LICENSE)

ELECTRICAL
THIS WORK WAS PREPARED BY ME OR UNDER MY SUPERVISION
PAUL K. UYEDA — LICENSED PROFESSIONAL ENGINEER No. 7646-E HAWAII, U.S.A.
MK ENGINEERS, LTD.
LICENSE EXPIRATION DATE: 4/30/22
(NAME AND LICENSE)

COMMUNICATION
THIS WORK WAS PREPARED BY ME OR UNDER MY SUPERVISION
PAUL K. UYEDA — LICENSED PROFESSIONAL ENGINEER No. 7646-E HAWAII, U.S.A.
MK ENGINEERS, LTD.
LICENSE EXPIRATION DATE: 4/30/22
(NAME AND LICENSE)

DESIGNER OF RECORD
THIS WORK WAS PREPARED BY ME OR UNDER MY SUPERVISION
FRANCIS T. HINO — LICENSED PROFESSIONAL ENGINEER No. 5499-C. HAWAII, U.S.A.
(NAME AND LICENSE)

LOCATION MAP

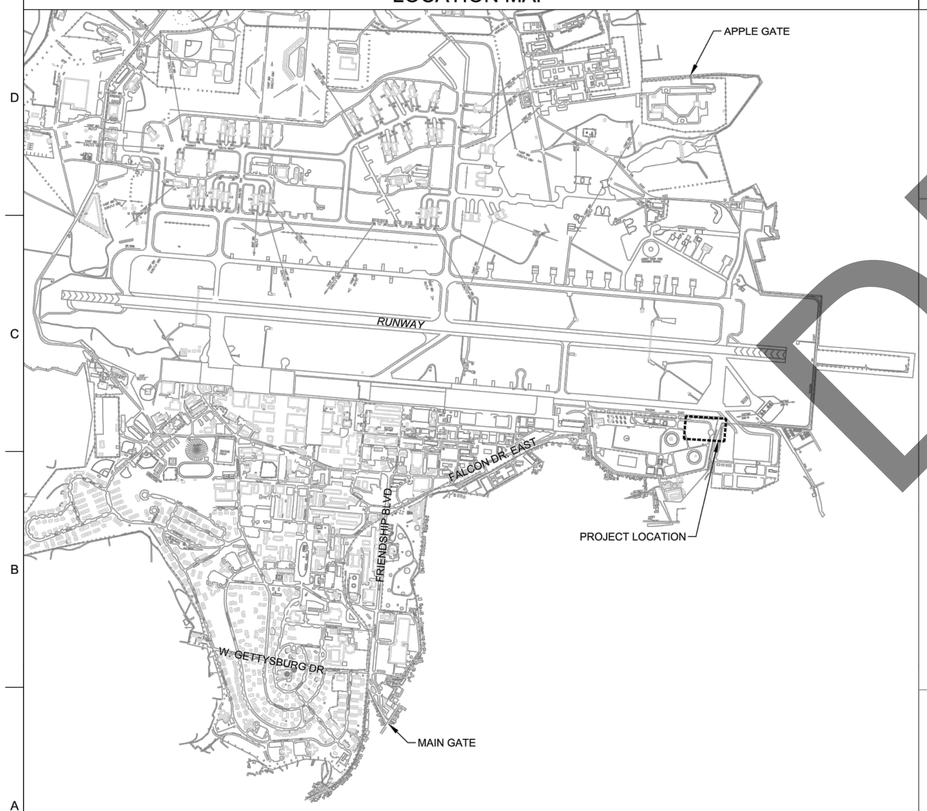

LOCATION MAP
SCALE = 1:30000
0 0.6 1.2km
NORTH

VICINITY MAP

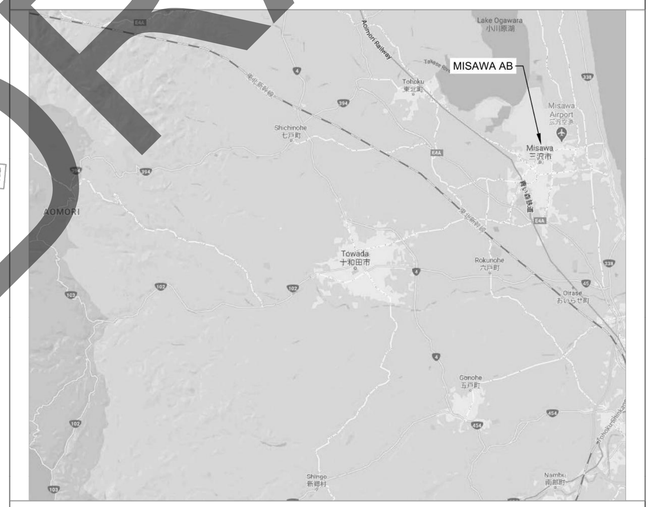

VICINITY MAP
SCALE = NTS
NORTH

MAP OF JAPAN

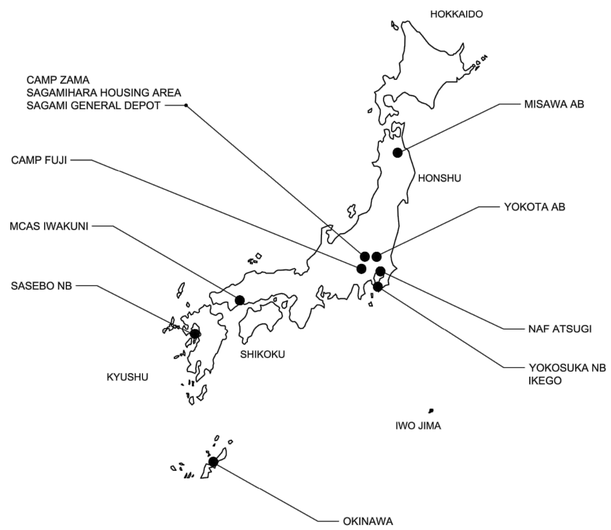

MAP OF JAPAN
SCALE = NTS
NORTH

US Army Corps of Engineers®

MARK	DESCRIPTION	DATE

ISSUE DATE: FEBRUARY 2022
SOLICITATION NO.: W912HV-17-B-0010
CONTRACT NO.: W912HV-17-D-0007
DRAWING CODE: -
DESIGNED BY: M. NISHIMURA
DRAWN BY: W. WU
CHECKED BY: T. MCCABE
SUBMITTED BY: F. HINO
SIZE: ISO A1
FILE NAME: DESC20UXG-001.dwg

U.S. ARMY CORPS OF ENGINEERS
CP&O, JAPAN DISTRICT
APO AP 96343-5010

HDR - WTNA JV
1001 BISHOP STREET
SUITE 400
HONOLULU, HAWAII 96813

MISAWA AIR BASE, JAPAN
DESC 20UX INSTALL ADDITIVE INJECTION SYSTEM

TITLE SHEET

SHEET ID
G-001

FILE: DESC20UXG-001.dwg
DATE: 2/21/2022 4:37 PM
OPER: WW*
SCALE: 1:50000

IF SHEET IS LESS THAN 594 X 841 MM
REDUCED PRINT = USE GRAPHIC SCALES

RTA SUBMITTAL

C:\Users\fep\Documents\Drawing1.dwg, Layout1, 3/29/2022 12:24:04 PM, fep, 1:28.4

SHEET ID	SHEET TITLE	REV STATUS	SHEET ID	SHEET TITLE	REV STATUS	SHEET ID	SHEET TITLE	REV STATUS
	GENERAL			STRUCTURAL			FIRE PROTECTION	
G-001	TITLE SHEET		S-001	FILTER BUILDING GENERAL NOTES AND DESIGN CRITERIA		F-001	FIRE PROTECTION NOTES, SYMBOLS AND ABBREVIATIONS	
G-002	DRAWING INDEX		S-002	TYPICAL DETAILS		F-101	BUILDING AND LIFE SAFETY CODE SUMMARY AND LIFE SAFETY PLAN	
G-003	GENERAL NOTES		S-101	FILTER BUILDING: TWO ROOMS ADDITION FOUNDATION PLAN & ROOF PLAN		F-102	CODE COMPLIANCE SITE PLAN	
G-004	ABBREVIATIONS AND SYMBOLS		S-102	ADDITIVE CONTAINER STORAGE AREA FOUNDATION PLAN & ROOF PLAN (BID OPTION #1)		FX101	FLOOR PLAN - FIRE SPRINKLER	
G-005	LOGS OF BORING		S-201	FILTER BUILDING: TWO ROOMS ADDITION & DOOR ELEVATIONS		FA101	FIRE PROTECTION DETAILS	
			S-301	TRANSFORMER AND GENERATOR EQUIPMENT LONGITUDINAL SECTION & TRANSVERSE SECTION		F-501	FLOOR PLAN - FIRE ALARM	
			S-401	FILTER BUILDING: TWO ROOMS ADDITION PLAN, SECTION AND DETAILS				
	CIVIL		S-402	FILTER BUILDING: TWO ROOMS ADDITION & DOOR PLAN, SECTION AND DETAILS				
C-101	EXISTING CONDITIONS		S-403	ADDITIVE CONTAINER STORAGE AREA PLAN, SECTION, AND DETAILS (BID OPTION #1)			ELECTRICAL	
C-102	EROSION CONTROL PLAN		S-404	ADDITIVE CONTAINER STORAGE AREA PLAN, SECTION AND DETAILS (BID OPTION #1)		E-001	ELECTRICAL AND ONE-LINE SYMBOLS	
C-103	HAUL ROUTE PLAN AND PROPOSED CONTRACTOR LAYDOWN AREAS		S-405	AREA LIGHTING POLE AND FSII SADDLE DETIALS		E-002	ABBREVIATIONS	
CD101	CIVIL DEMOLITION PLAN		S-406	EQUIPMENT PADS AND PIER PLAN, SECTION AND DETAILS		E-003	HAZARDOUS LOCATION CLASSIFICATION NOTES AND DETAILS	
CS101	CIVIL SITE PLAN		S-501	TYPICAL DETAILS		E-004	FILTER BUILDING ELECTRICAL PLAN	
CS401	CIVIL PLOT PLAN		S-502	ADDITIVE CONTAINER STORAGE AREA PLATFORMS PLANS, SECTIONS AND DETAILS		E-005	HAZARDOUS LOCATION CLASSIFICATION PLAN - ADDITIVE INJECTION FACILITY	
CP101	GEOMETRIC PLAN					E-101	OVERALL SITE ELECTRICAL PLAN	
CG101	GRADING AND DRAINAGE PLAN 1					E-102	SITE ELECTRICAL PLAN	
CG102	GRADING AND DRAINAGE PLAN 2			MECHANICAL		E-201	FILTER BUILDING ELECTRICAL PLAN	
CG201	TRENCH DRAIN PROFILE		M-001	ABBREVIATIONS AND LEGENDS		E-202	FILTER BUILDING LIGHTNING PLAN	
CG301	SITE SECTIONS 1		M-010	FILTER BUILDING FLOW DIAGRAM (DEMOLITION)		E-203	FILTER BUILDING LIGHTNING PROTECTION PLAN	
CG302	SITE SECTIONS 2		M-011	NEW FILTER BUILDING FLOW DIAGRAM		E-204	FILTER BUILDING GROUNDING PLAN	
CG303	SITE SECTIONS 3		M-012	FSII ADDITIVE STORAGE FLOW DIAGRAM		E-205	ADDITIVE OFFLOAD AND STORAGE ELECTRICAL PLAN	
CG304	SITE SECTIONS 4		M-013	CI/LI AND SDA ADDITIVE STORAGE FLOW DIAGRAM		E-206	ADDITIVE OFFLOAD AND STORAGE LIGHTING PLAN	
CG305	SITE SECTIONS 5		M-014	BREAKOUT TANK REMOVALS FLOW DIAGRAM		E-207	ADDITIVE OFFLOAD AND STORAGE MECHANICAL CONNECTION PLAN	
CU101	CIVIL UTILITY PLAN		M-015	BREAKOUT TANK FLOW DIAGRAM		E-208	ADDITIVE OFFLOAD AND STORAGE GROUNDING PLAN	
CU201	WATERLINE PROFILE 1		MD101	BUILDING 1150 PIPING DEMOLITION PLAN		E-209	ADDITIVE OFFLOAD AND STORAGE LIGHTING PROTECTION PLAN	
CU201	WATER LINE PROFILE 2		MS101	BUILDING 1150 OVERALL SITE PLAN		E-210	EMERGENCY GENERATOR BUILDING ELECTRICAL PLAN	
C-501	CIVIL DETAILS 1		M-101	BUILDING 1150 PIPING MODIFICATION PLAN		E-501	DUCT SECTION DETAILS	
C-502	CIVIL DETAILS 2		M-102	ADDITIVE OFFLOAD AND STORAGE PIPING PLAN		E-502	MANHOLE DETAILS	
C-503	CIVIL DETAILS 3		M-201	BUILDING 1150 PIPING ELEVATIONS 1		E-503	AREA LIGHT MOUNTING DETAILS	
C-504	CIVIL DETAILS 4		M-202	BUILDING 1150 PIPING ELEVATIONS 2		E-504	LIGHT FIXTURE DETAILS	
C-505	CIVIL DETAILS 5		M-203	ADDITIVE OFFLOAD AND STORAGE PIPING ELEVATIONS		E-505	ELECTRICAL EQUIPMENT GROUND BAR (EGB) DETAIL	
C-506	CIVIL DETAILS 6		M-401	ENLARGED BREAK-OUT TANK WATER DRAW-OFF PIPING MODIFICATIONS		E-506	LIGHTNING PROTECTION SYSTEM DETAILS - 1	
			M-402	ENLARGED FSII CHARGE PUMP PIPING		E-507	LIGHTNING PROTECTION SYSTEM DETAILS - 2	
			M-501	GENERAL MECHANICAL PIPING DETAILS		E-508	LIGHTNING PROTECTION SYSTEM DETAILS - 3	
	ARCHITECTURAL		M-502	PIPE SUPPORT DETAILS		E-509	ADDITIVE INJECTION PUMP CONTROL PANEL (AIP) DETAILS	
A-001	ARCHITECTURAL GENERAL NOTES AND ABBREVIATIONS		M-503	FSII ADDITIVE STORAGE TANK DETAILS 1		E-601	ONE-LINE DIAGRAM	
A-101	B1150 FLOOR PLAN		M-504	FSII ADDITIVE STORAGE TANK DETAILS 2		E-602	ADDITIVE INJECTION CONTROL PANEL (AIP) DIAGRAM	
A-102	B1150 REFLECTED CEILING PLAN		M-505	SDA AND CI/LI STORAGE TANK DETAILS		E-603	ADDITIVE INJECTION CONTROL SYSTEM I/O	
A-103	B1150 ROOF PLAN		M-506	SDA AND CI/LI ADDITIVE MIX TANK DETAILS		E-604	CONTROL DIAGRAMS	
A-104	CANOPY PLANS, ELEVATIONS, SECTIONS		M-601	MECHANICAL POL SCHEDULE		E-701	PANEL SCHEDULES	
A-201	B1150 EXTERIOR ELEVATIONS		M-701	SEQUENCE OF OPERATIONS				
A-202	B1150 EXTERIOR ELEVATIONS		M-702	ADDITIVE INJECTION TRANSFER OPERATIONS VALVE POSITION TABLE				
A-301	B1150 BUILDING SECTIONS		MH-100	EQUIPMENT SCHEDULE				
A-311	B1150 BUILDING SECTIONS		MH-101	PLAN, ELEVATIONS AND ISOMETRIC DRAWING				
A-401	B1150 INTERIOR ELEVATIONS		MH-102	OFFLOADING AREA ISOMETRIC - EMERGENCY EYEWASH STATION				
A-501	ARCHITECTURAL DETAILS		MH-103	MISCELLANEOUS DETAILS				
A-502	METAL ROOF DETAILS							
A-503	RAISED WALKWAY DETAILS							
A-504	RAISED WALKWAY DETAILS							
A-601	SCHEDULE							
A-602	SIGN SCHEDULE & DETAILS							

DRAFT

US Army Corps of Engineers®

MARK	DESCRIPTION	DATE

ISSUE DATE: FEBRUARY 2022
SOLICITATION NO.: -
CONTRACT NO.: W912HV-17-D-0007
DRAWING CODE: -
DESIGNED BY: M. NISHIMURA
DRAWN BY: C. MIU
CHECKED BY: T. MCCABE
SUBMITTED BY: F. HINO
FILE NAME: DESC20UXG-002.dwg
SIZE: ISO A1

U.S. ARMY CORPS OF ENGINEERS
JAPAN DISTRICT
APO AP 96343-5010

HDR - WTNA JV
1001 BISHOP STREET
SUITE 400
HONOLULU, HAWAII 96813

MISAWA AIR BASE, JAPAN
DESC 20UX INSTALL ADDITIVE INJECTION SYSTEM

DRAWING INDEX

SHEET ID
G-002

FILE: DESC20UXG-002.dwg
DATE: 2/28/2022 3:04 PM OPER: RKP, WW* SCALE:

IF SHEET IS LESS THAN 594 X 841 MM
REDUCED PRINT = USE GRAPHIC SCALES

RTA SUBMITTAL

GENERAL NOTES

1. DIMENSIONS TAKE PRECEDENCE OVER SCALE.
2. AZIMUTHS MEASURED FROM TRUE NORTH = 0 DEGREES, 00 MINUTES, 00 SECONDS AND INCREASE CLOCKWISE.
3. ALL WORK PERFORMED SHALL COMPLY WITH U.S. ARMY CORPS OF ENGINEERS EM 385-1-1, SAFETY AND HEALTH REQUIREMENTS, AND WITH ALL FEDERAL, STATE AND LOCAL LAWS REQUIRED FOR THE PROTECTION OF PUBLIC HEALTH, SAFETY AND ENVIRONMENTAL QUALITY. WHERE REQUIREMENTS VARY, THE MOST STRINGENT REQUIREMENTS SHALL APPLY.
4. THE CONTRACTOR SHALL REMOVE ALL SILT AND DEBRIS RESULTING FROM HIS WORK DEPOSITED IN DRAINAGE FACILITIES, ROADWAYS AND OTHER AREAS. THE COSTS INCURRED FOR ANY NECESSARY REMEDIAL ACTION BY THE GOVERNMENT SHALL BE PAYABLE BY THE CONTRACTOR.
5. THE CONTRACTOR SHALL RESTORE TO THEIR ORIGINAL CONDITION ALL IMPROVEMENTS DAMAGED AS A RESULT OF THE CONSTRUCTION, INCLUDING PAVEMENTS, EMBANKMENTS, CURBS, SIGNS, LANDSCAPING, STRUCTURES, UTILITIES, WALLS, FENCES, ETC.
6. THE CONTRACTOR SHALL PROVIDE AND MAINTAIN ALL SIGNS, CONES, BARRICADES, AND OTHER PROTECTIVE FACILITIES TO IDENTIFY AND DELINEATE CONSTRUCTION WORK AREAS.
7. THE EXISTENCE AND LOCATION OF UNDERGROUND UTILITIES AND STRUCTURES AS SHOWN ON THE PLANS ARE BASED ON THE AVAILABLE DATA.
8. OBTAIN A BASE CIVIL ENGINEERING WORK CLEARANCE PRIOR TO THE START OF CONSTRUCTION.
9. PRIOR TO COMMENCING EXCAVATION, NOTIFY THE CONTRACTING OFFICER.
10. IF CAVITIES AND/OR VOIDS ARE ENCOUNTERED DURING EXCAVATION WORK, STOP WORK IMMEDIATELY AND NOTIFY THE CONTRACTING OFFICER.
11. ALL WORK SHALL BE PERFORMED IN ACCORDANCE WITH 29 CFR 1910, NFPA 70 (NEC), NFPA 101 (LIFE SAFETY CODE), AND OTHER APPLICABLE INDUSTRY STANDARDS RELATING TO OCCUPATIONAL SAFETY AND HEALTH.
12. CONTRACTOR TO COORDINATE WITH CONTRACTING OFFICER FOR HAUL ROUTE, LAYDOWN AREA, AND TRAILER COMPLEX LOCATION.

TOPOGRAPHIC SURVEY NOTES

1. TOPOGRAPHIC SURVEY COORDINATE SYSTEM IS BASED ON JAPAN GEODETIC DATUM (JGD) 2011, ZONE 10 AND IS IN INTERNATIONAL METRIC UNITS.
2. SURVEY CONDUCTED BY:
   ENVIRONMENTAL SCIENCE CORPORATION
   ESC BUILDING 1553-231 ISHIKAWA IHA,
   URUMA CITY, OKINAWA, JAPAN 904-1115
   TEL. 011-81-098-989-0426
   REGISTERED SURVEYOR: MR. KOJI CHINEN
   JAPAN REGISTERED SURVEYOR, REGISTRATION NO: H7-724
3. DATE OF TOPOGRAPHIC SURVEY: OCTOBER 2019
4. LOCATION OF EXISTING MAINS AND SERVICE LATERAL LINES FOR WATER, ELECTRICAL, COMMUNICATION AND FUEL SYSTEMS SHOWN IN THE SURVEY MAP ARE APPROXIMATE AND BASED ON BEST AVAILABLE INFORMATION PROVIDED BY OTHERS.

DRAFT

US Army Corps of Engineers®

MARK	DESCRIPTION	DATE

DESIGNED BY: M. NISHIMURA
DRAWN BY: W. WU
CHECKED BY: T. MCCABE
SUBMITTED BY: F. HINO
SIZE: ISO A1
ISSUE DATE: FEBRUARY 2022
SOLICITATION NO.: -
CONTRACT NO.: W912HV-17-D-0007
DRAWING CODE: -
FILE NAME: DESC20UXG-003.dwg

U.S. ARMY CORPS OF ENGINEERS
JAPAN DISTRICT
APO AP 96343-5010

HDR - WTNA JV
1001 BISHOP STREET
SUITE 400
HONOLULU, HAWAII 96813

MISAWA AIR BASE, JAPAN
DESC 20UX INSTALL ADDITIVE INJECTION SYSTEM

GENERAL NOTES

SHEET ID
G-003

LIST OF ABBREVIATIONS

AC	ASPHALT CONCRETE
ADT	AVERAGE DAILY TRAFFIC
AS	ASPHALT
B	BASE LINE
BV	BOTTOM VERTICAL
BVC	BEGIN VERTICAL CURVE
℄	CENTER LINE
CONC	CONCRETE
CP	CONCRETE PIPE
D	DIAMETER OF DRAIN
DEG	DEGREE
DHV	DESIGN HOURLY VOLUME
DI	DRAIN INLET
DMH	STORM DRAIN MANHOLE
ELEV	ELEVATION
EMH	ELECTRICAL MANHOLE
EP	ELECTRIC POLE
EVC	END VERTICAL CURVE
EW	EACH WAY
EXST, E/	EXISTING
FH	FIRE HYDRANT
FG	FINISH GRADE
FL	FLOW LINE
GSP	GALVANIZED STEEL PIPE
INV	INVERT
ILS	INSTRUMENT LANDING SYSTEM
KM/H	KILOMETERS PER HOUR
LP	LIGHT POLE
LT	LEFT
M	METER
MAX	MAXIMUM
MH	MANHOLE
MIN	MINIMUM
mm	MILLIMETER
MPH	MILES PER HOUR
OC, O.C.	ON CENTER
O/S	OFFSET
PAV'T	PAVEMENT
PC	POINT OF CURVATURE
PED	PEDESTRIAN
PI	POINT OF INTERSECTION
PIVC	POINT OF INTERSECTION VERTICAL CURVE
PT	POINT OF TANGENCY
RCP	REINFORCED CONCRETE PIPE
RT	RIGHT
S	SEWER
SLP	SLOPE
SM	SQUARE METERS
SMH	SEWER MANHOLE
SQ	SQUARE
STA.	STATION
THK	THICK
TMH	TELEPHONE MANHOLE
TP	TELEPHONE POLE
TV	TOP VERTICAL
TYP	TYPICAL
VC	VERTICAL CURVE
VP	POLYVINYL CHLORIDE PIPE
W	WATER
WMH	WATER MANHOLE
WV	WATER VALVE

SYMBOLS

EXISTING		NEW
2451	BUILDING	
Co	CONCRETE PAVEMENT	
AS	ASPHALT PAVEMENT	
	ASPHALT BOUNDARY LINE	
	BLOCK WALL	
	FENCE	
	OUTCROP	
	SLOPE	
	KENCHI BLOCK	
	RETAINING WALL	
	L-TYPE DITCH	
	STONE FLAGGED DITCH	
	OPEN DITCH	
	GRATING	
	GUARDRAIL	
	BANISTER	
	HEDGE	
1	TREES	
	TURF AREA	
	WASTE LAND	
	VEGETATION BOUNDARY	
LP	LIGHT POLE	
FH	FIRE HYDRANT	
WIRE EP	ELECTRIC POLE (WIRE = TENSION WIRE)	
TP	TELEPHONE POLE	
	TRAFFIC SIGN	
WV	WATER VALVE	
TMH	TELEPHONE MANHOLE	
EMH	ELECTRIC MANHOLE	
SMH	SEWER MANHOLE	
DMH	STORM DRAINAGE MANHOLE	
WV	WATER MANHOLE	
Y1	CONTROL POINT	
W x	WATER PIPE	
EUx	ELECTRIC LINE	
C x	TELEPHONE LINE	
SDx	STORM DRAIN PIPE	
E x	OVERHEAD ELECTRICAL LINE	
CP	CONCRETE PIPE	
VP	PVC PIPE	
B-1	GEOTECHNICAL SOIL BORING LOCATION	
E-1	ENVIRONMENTAL SOIL SAMPLING LOCATION	
31	MAJOR CONTOUR	31
	MINOR CONTOUR	

CROSS REFERENCING SYSTEM

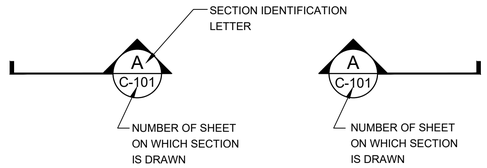

SYMBOL WHERE SECTION IS TAKEN

A SECTION
SCALE: 1:1000 0 20 40m

SUBTITLE FOR SECTION / ELEVATION DRAWING

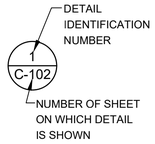

SYMBOL FOR CONDITION FOR WHICH THERE IS A DETAIL

A1 DETAIL
SCALE: 1:1000 0 20 40m

SUBTITLE FOR DETAIL DRAWING

DRAFT

US Army Corps of Engineers®

MARK	DESCRIPTION	DATE

ISSUE DATE: FEBRUARY 2022
SOLICITATION NO.: -
CONTRACT NO.: W912HV-17-D-0007
DRAWING CODE: -
DESIGNED BY: M. NISHIMURA
DRAWN BY: W. WU
CHECKED BY: T. MCCABE
SUBMITTED BY: F. HINO
SIZE: ISO A1
FILE NAME: DESC20UXG-004.dwg

U.S. ARMY CORPS OF ENGINEERS
JAPAN DISTRICT
APO AP 96343-5010

HDR - WTNA JV
1001 BISHOP STREET
SUITE 2400
HONOLULU, HAWAII 96813

MISAWA AIR BASE, JAPAN
DESC 20UX INSTALL ADDITIVE INJECTION SYSTEM

ABBREVIATIONS AND SYMBOLS

SHEET ID
G-004

FILE: DESC20UXG-004.dwg
DATE: 2/17/2021 3:36 PM
OPER: BTY, WW*
SCALE:

IF SHEET IS LESS THAN 594 X 841 MM
REDUCED PRINT = USE GRAPHIC SCALES

RTA SUBMITTAL

DRILLING LOG		INSTALLATION Misawa Air Base, Japan	SHEET 1 OF 3 SHEETS
1. PROJECT FY20 DLA UMC DESC20UX INSTALL ADDITIVE INJECTION SYSTEM MISAWA AIR BASE, JAPAN		10. SIZE AND TYPE OF BIT 66mm Dia. Single Core Tube Bit & Split Spoon sampler	
		11. DATUM FOR ELEVATION SHOWN JGD 2011 - Zone 10	
2. LOCATION (Coordinates or Station) N: 77679.356 m E: 46627.59 m		12. MANUFACTURER'S DESIGNATION OF DRILL YBM-05DA2 / WASH BORINGS / DONUT TYPE WITH TRIGGER / 80%	
3. DRILLING AGENCY Environmental Science Corporation		13. TOTAL NO. OF SAMPLES TAKEN (TAKEN / TESTED)	DISTURBED 20/7 / UNDISTURBED 1/1
4. HOLE ID NO. B-1		14. TOTAL NUMBER CORE BOXES None	
5. NAME OF DRILLER Suga, Kouji		15. ELEVATION GROUND WATER EL= 24.78 m (GL= -6.74 m)	
6. DIRECTION OF HOLE ☑ VERTICAL ☐ INCLINED ___ DEG. FROM VERT.		16. DATE HOLE STARTED 18 Feb. 2020 COMPLETED 20 Feb. 2020	
7. THICKNESS OF OVERBURDEN 20.45 m		17. ELEVATION TOP OF HOLE EL= 31.52 m	
8. DEPTH DRILLED INTO ROCK -		18. TOTAL CORE RECOVERY FOR BORING -	
9. TOTAL DEPTH OF HOLE 20.45 m		19. SIGNATURE OF INSPECTOR Yonaha, Noboru	

EL (m)	DEPTH from Sea Bottom (BB) (m)	LEGEND	CLASSIFICATION OF MATERIALS (Description)	Total Blow Count Of S.P.T	DEPTH & Blow count /10 cm	STANDARD PENETRATION TEST SPT N Value (10 20 30 40 50)	SAMPLE / TEST
31.52	0.00		**Fill Material** **Reddish Gray / Medium water content** Layer is main composed of silty clay originated from Kuroboku soil mixed with grassroots.		1.15m		
30.72	0.80				3, 2, 3		
	1.00			8	1.45m		
29.92	1.60		**Organic Material (Kuroboku Soil)** **Reddish Gray / Low Water Content** Layer of silt presenting low plasticity.		2.15m		
	2.00			2	1, 1		
					2.45m		
	3.00		**Loam** **Brown / Medium Water Content** Layer presents some scattered scoria.		3.00m		
				1/50cm	0, 1		PT
	4.00				3.50m		
					4.15m		
				3/32cm	1, 1, 1		
	5.00				4.47m		
					5.15m		
26.22	5.30			6/32cm	1, 2, 3		
25.72	5.80		**Sandy Loam** **Brown / Low Water Content** Layer is composed of silt with fine sand.		5.47m		
	6.00				6.15m		
				12	4, 3, 5		PT
					6.45m	EL=24.78m (GL=-6.74m)	
	7.00				7.15m		
				20	6, 7, 7		PT
					7.45m		
	8.00		**Sand with Gravel** **Dark Brownish Gray to Brownish Gray / Medium Water Content** Layer is main composed of uniform particle size of fine sand distribution. Medium and coarse sand are mixed irregularly. Gravel is dotted in the layer with diameter of 2 to 4 mm.		8.15m		
				11/33cm	5, 4, 2		PT
					8.48m		
	9.00				9.15m		
				12	3, 5, 4		PT
					9.45m		
	10.00				10.15m		
				17	5, 6, 6		PT
					10.45m		
	11.00				11.15m		
				18	4, 6, 8		PT
					11.45m		
	12.00				12.15m		
				20	6, 7, 7		PT
					12.45m		
18.72	12.80				13.15m		
	13.00		**Fine Sand** **Dark Gray / Medium Water Content** Layer composed of uniform particle size of fine sand.	46/30cm	12, 17, 17		PT
					13.45m		
	14.00				14.15m		
				50/26cm	15, 21, 14		
					14.41m		
	15.00				15.15m		
				50/25cm	12, 25, 13		
					15.40m		
	16.00				16.15m		
				50/21cm	20, 26, 4		
					16.30m		
	17.00				17.15m		
				36/30cm	12, 11, 13		
					17.45m		
	18.00				18.15m		
				48/30cm	13, 17, 18		
					18.45m		
	19.00				19.15m		
				46/30cm	12, 17, 17		
					19.45m		
	20.00				20.15m		
11.07	20.45		Bottom of Hole	39/30cm	7, 13, 19		
					20.45m		

LEGEND: ▨ UNDISTURBED SAMPLE ☒ DISTURBED SAMPLE ■ ROCK CORE SAMPLE

PT: GEO-PHYSICAL TESTS, UCT: UNCONFINED COMPRESSION TEST, UU: UU TRIAXIAL TEST, CU: CU TRIAXIAL TEST, CON: CONSOLIDATION TEST PP: POCKET PENETROMETER, [qu], LLT: LATERAL LOADING TEST (PRESSUREMETER TEST), [E], COR: LAB TESTS FOR CORROSIVITY POTENTIAL (SULFATES, CHLORIDES, PH, SOIL CONDUCTIVITY)

HOLE No. B-1

DRILLING LOG		INSTALLATION Misawa Air Base, Japan	SHEET 2 OF 3 SHEETS
1. PROJECT FY20 DLA UMC DESC20UX INSTALL ADDITIVE INJECTION SYSTEM MISAWA AIR BASE, JAPAN		10. SIZE AND TYPE OF BIT 66mm Dia. Single Core Tube Bit & Split Spoon sampler	
		11. DATUM FOR ELEVATION SHOWN JGD 2011 - Zone 10	
2. LOCATION (Coordinates or Station) N: 77665.277 m E: 46631.686 m		12. MANUFACTURER'S DESIGNATION OF DRILL YBM-05DA2 / WASH BORINGS / DONUT TYPE WITH TRIGGER / 80%	
3. DRILLING AGENCY Environmental Science Corporation		13. TOTAL NO. OF SAMPLES TAKEN (TAKEN / TESTED)	DISTURBED 15/3 / UNDISTURBED -
4. HOLE ID NO. B-2		14. TOTAL NUMBER CORE BOXES None	
5. NAME OF DRILLER Suga, Kouji		15. ELEVATION GROUND WATER EL= 24.65 m (GL= -6.23 m)	
6. DIRECTION OF HOLE ☑ VERTICAL ☐ INCLINED ___ DEG. FROM VERT.		16. DATE HOLE STARTED 20 Feb. 2020 COMPLETED 21 Feb. 2020	
7. THICKNESS OF OVERBURDEN 15.45 m		17. ELEVATION TOP OF HOLE EL= 30.88 m	
8. DEPTH DRILLED INTO ROCK -		18. TOTAL CORE RECOVERY FOR BORING -	
9. TOTAL DEPTH OF HOLE 15.45 m		19. SIGNATURE OF INSPECTOR Yonaha, Noboru	

EL (m)	DEPTH from Sea Bottom (BB) (m)	LEGEND	CLASSIFICATION OF MATERIALS (Description)	Total Blow Count Of S.P.T	DEPTH & Blow count /10 cm	STANDARD PENETRATION TEST SPT N Value (10 20 30 40 50)	SAMPLE / TEST
30.88	0.00						
30.48	0.40		**Fill Material** **Reddish Gray / Medium Water Content** Layer is main composed of silty clay originated from Kuroboku soil mixed with grassroots.		1.15m		
	1.00				2, 2, 2		PT
29.68	1.20						
			Organic Material (Kuroboku Soil) **Reddish Gray / Low Water Content** Layer of silt presenting low plasticity.		1.49m		
	2.00			6/34cm	2.00m		
					0, 1		
				1/50cm			
	3.00		**Loam** **Brown / Medium Water Content** Layer presents some scattered scoria.		2.50m		
					3.50m		UCT, CON
27.38	3.50			0	0		PT
	4.00				3.80m		
					4.15m		
			Sandy Loam **Dark Brown / Low Water Content** Layer is composed of silt with fine sand.	2	1, 1		PT
25.98	4.90				4.45m		
	5.00				5.15m		
				50/30cm	16, 17, 17		
	6.00				5.45m		
					6.15m		
				19	3, 6, 10		
					6.45m	EL=24.65m (GL=-6.23m)	
	7.00				7.15m		
				11	4, 3, 4		
					7.45m		
	8.00		**Sand with Gravel** **Dark Brown to Brownish Gray / Medium Water Content** Layer is main composed of uniform particle size of fine sand distribution. Medium and coarse sand are mixed irregularly. Gravel is dotted in the layer with diameter of 2 to 4 mm.		8.15m		
				15	3, 6, 6		
					8.45m		
	9.00				9.15m		
				12	4, 4, 4		
					9.45m		
	10.00				10.15m		
				19	5, 7, 7		
					10.45m		
	11.00				11.15m		
				15	5, 5, 5		
					11.45m		
	12.00				12.15m		
				21	5, 6, 10		
					12.45m		
18.08	12.80				13.15m		
	13.00		**Fine Sand** **Dark Gray / Medium Water Content** Layer composed of uniform particle size of fine sand.	48/30cm	11, 17, 20		
					13.45m		
	14.00				14.15m		
				39/30cm	11, 13, 15		
					14.45m		
	15.00				15.15m		
				50/30cm	10, 17, 18		
15.43	15.45		Bottom of Hole		15.45m		
	16.00						
	17.00						
	18.00						
	19.00						
	20.00						

LEGEND: ▨ UNDISTURBED SAMPLE ☒ DISTURBED SAMPLE ■ ROCK CORE SAMPLE

PT: GEO-PHYSICAL TESTS, UCT: UNCONFINED COMPRESSION TEST, UU: UU TRIAXIAL TEST, CU: CU TRIAXIAL TEST, CON: CONSOLIDATION TEST PP: POCKET PENETROMETER, [qu], LLT: LATERAL LOADING TEST (PRESSUREMETER TEST), [E], COR: LAB TESTS FOR CORROSIVITY POTENTIAL (SULFATES, CHLORIDES, PH, SOIL CONDUCTIVITY)

HOLE No. B-2

DRILLING LOG		INSTALLATION Misawa Air Base, Japan	SHEET 3 OF 3 SHEETS
1. PROJECT FY20 DLA UMC DESC20UX INSTALL ADDITIVE INJECTION SYSTEM MISAWA AIR BASE, JAPAN		10. SIZE AND TYPE OF BIT 66mm Dia. Single Core Tube Bit & Split Spoon sampler	
		11. DATUM FOR ELEVATION SHOWN JGD 2011 - Zone 10	
2. LOCATION (Coordinates or Station) N: 77672.231 m E: 46643.267		12. MANUFACTURER'S DESIGNATION OF DRILL YBM-05DA2 / WASH BORINGS / DONUT TYPE WITH TRIGGER / 80%	
3. DRILLING AGENCY Environmental Science Corporation		13. TOTAL NO. OF SAMPLES TAKEN (TAKEN / TESTED)	DISTURBED 3/1 / UNDISTURBED -
4. HOLE ID NO. B-3		14. TOTAL NUMBER CORE BOXES None	
5. NAME OF DRILLER Suga, Kouji		15. ELEVATION GROUND WATER None	
6. DIRECTION OF HOLE ☑ VERTICAL ☐ INCLINED ___ DEG. FROM VERT.		16. DATE HOLE STARTED 22 Feb. 2020 COMPLETED 22 Feb. 2020	
7. THICKNESS OF OVERBURDEN 3.49 m		17. ELEVATION TOP OF HOLE EL= 30.57 m	
8. DEPTH DRILLED INTO ROCK -		18. TOTAL CORE RECOVERY FOR BORING -	
9. TOTAL DEPTH OF HOLE 3.49 m		19. SIGNATURE OF INSPECTOR Yonaha, Noboru	

EL (m)	DEPTH from Sea Bottom (BB) (m)	LEGEND	CLASSIFICATION OF MATERIALS (Description)	Total Blow Count Of S.P.T	DEPTH & Blow count /10 cm	STANDARD PENETRATION TEST SPT N Value (10 20 30 40 50)	SAMPLE / TEST
30.57	0.00		**Fill Material** **Light Gray to Dark Gray / High Water Content** Layer is main composed of following layers: -0.00 to 0.03 m bgs Asphalt -0.03 to 0.13 m Crushed Stone -0.13 to 0.70 m bgs Fine Sand -Deeper than 0.80 m bgs, soil presents some oil odor Water content is high from depth of 0.80 m bgs to deeper.				
29.77	0.80						
	1.00						
29.42	1.15				1.15m		
			Organic Material (Kuroboku Soil) **Reddish Gray / Low Water Content** Layer of silt presenting low plasticity.	5/35cm	2, 1, 2		
					1.50m		
28.77	1.80		**Loam** **Brown / Medium Water Content** Layer presents some scattered scoria.				
	2.00				2.15m		
				2/35cm	1, 1		
			Sandy Loam **Dark Brown / Low Water Content** Layer is composed of silt with fine sand. It is encountered unevenly scattered corrosive. Some gravels are scattered along the layer with diameter about 2 mm.		2.50m		
	3.00						
					3.15m		
				3/34cm	1, 1, 1		
27.08	3.49		Bottom of Hole		3.49m		
	4.00						
	5.00						
	6.00						
	7.00						
	8.00						
	9.00						
	10.00						

LEGEND: ▨ UNDISTURBED SAMPLE ☒ DISTURBED SAMPLE ■ ROCK CORE SAMPLE

PT: GEO-PHYSICAL TESTS, UCT: UNCONFINED COMPRESSION TEST, UU: UU TRIAXIAL TEST, CU: CU TRIAXIAL TEST, CON: CONSOLIDATION TEST PP: POCKET PENETROMETER, [qu], LLT: LATERAL LOADING TEST (PRESSUREMETER TEST), [E], COR: LAB TESTS FOR CORROSIVITY POTENTIAL (SULFATES, CHLORIDES, PH, SOIL CONDUCTIVITY)

HOLE No. B-3

DRAFT

LOGS OF BORING

US Army Corps of Engineers ©

MARK	DESCRIPTION	DATE

ISSUE DATE: FEBRUARY 2022
SOLICITATION NO.: W912HV-20-B-0010
CONTRACT NO.: W912HV-17-D-0007
DESIGNED BY: M. NISHIMURA
DRAWN BY: W. WU
CHECKED BY: T. MCCABE
SUBMITTED BY: F. HIKO
DRAWING CODE: -
SIZE: ISO A1
FILE NAME: DESC20UXG-005.dwg

U.S. ARMY CORPS OF ENGINEERS
JAPAN DISTRICT
APO AP 96343-5010

HDR - WTNA JV
1001 BISHOP STREET
SUITE 2400
HONOLULU, HAWAII 96813

MISAWA AIR BASE, JAPAN
DESC 20UX INSTALL ADDITIVE INJECTION SYSTEM

LOGS OF BORING

SHEET ID
G-005

FILE: DESC20UXG-005.dwg
DATE: 1/20/2021 10:59 AM
OPER: BTY, WW*
SCALE:

IF SHEET IS LESS THAN 594 X 841 MM
REDUCED PRINT = USE GRAPHIC SCALES

RTA SUBMITTAL

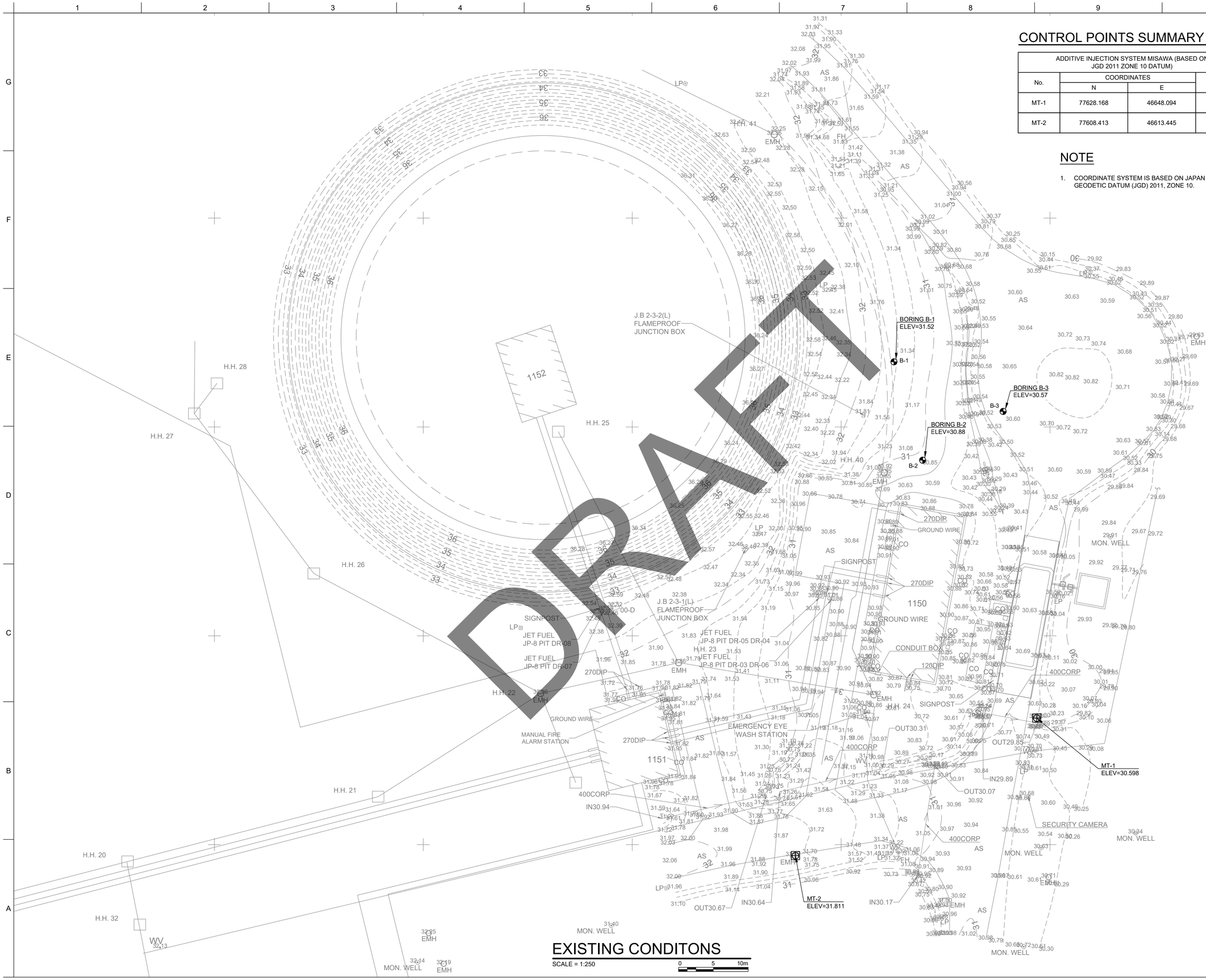

EXISTING CONDITONS

SCALE = 1:250

0 5 10m

CONTROL POINTS SUMMARY TABLE

ADDITIVE INJECTION SYSTEM MISAWA (BASED ON JGD 2011 ZONE 10 DATUM)			
No.	COORDINATES		ELEVATION
	N	E	
MT-1	77628.168	46648.094	30.598
MT-2	77608.413	46613.445	31.811

NOTE

1. COORDINATE SYSTEM IS BASED ON JAPAN GEODETIC DATUM (JGD) 2011, ZONE 10.

DRAFT

US Army Corps of Engineers®

MARK	DESCRIPTION	DATE

DESIGNED BY: M. NISHIMURA
DRAWN BY: W. WU
CHECKED BY: T. MCCABE
SUBMITTED BY: F. HINO
SIZE: ISO A1
ISSUE DATE: FEBRUARY 2022
SOLICITATION NO.:
CONTRACT NO.: W912HV-17-D-0007
DRAWING CODE: -
FILE NAME: DESC20UXC-101.dwg

U.S. ARMY CORPS OF ENGINEERS
PACIFIC OCEAN DIVISION
APO AP 96343-5010

HDR - WTNA JV
1001 BISHOP STREET
SUITE 1800
HONOLULU, HAWAII 96813

MISAWA AIR BASE, JAPAN
DESC 20UX INSTALL ADDITIVE INJECTION SYSTEM

EXISTING CONDITIONS

SHEET ID
C-101

FILE: DESC20UXC-101.dwg
DATE: 2/14/2021 11:04 PM
OPER: WW*
SCALE: 1:250

IF SHEET IS LESS THAN 594 X 841 MM
REDUCED PRINT = USE GRAPHIC SCALES

RTA SUBMITTAL

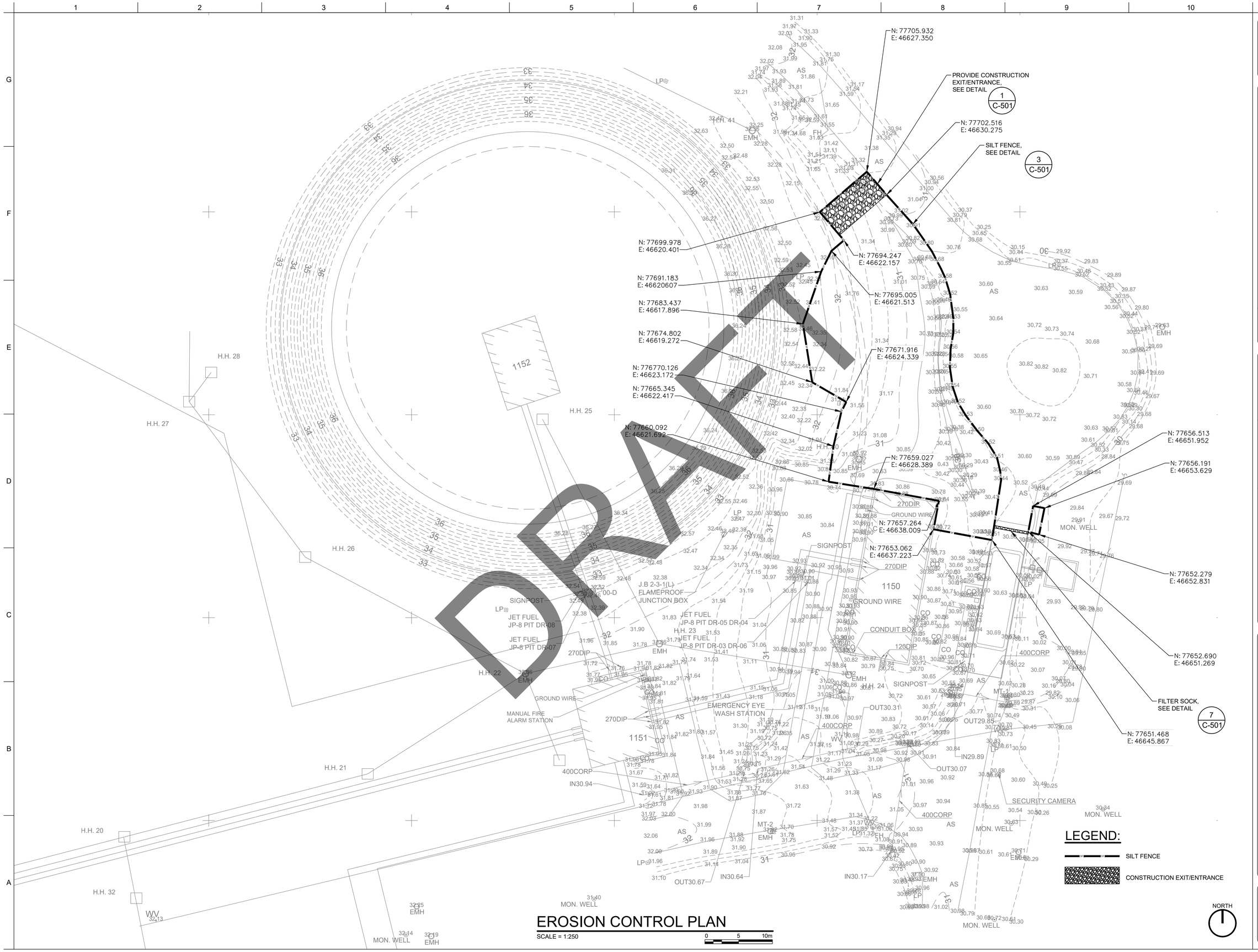

EROSION CONTROL PLAN

SCALE = 1:250

0 5 10m

US Army Corps of Engineers®

MARK	DESCRIPTION	DATE

DESIGNED BY: M. NISHIMURA
DRAWN BY: C. WU
CHECKED BY: T. MCCABE
SUBMITTED BY: F. HINO
SIZE: ISO A1
ISSUE DATE: FEBRUARY 2022
SOLICITATION NO.:
CONTRACT NO.: W912HV-17-D-0007
DRAWING CODE: -
FILE NAME: DESC20UXC-102.dwg

U.S. ARMY CORPS OF ENGINEERS
FORT SHAFTER
APO AP 96343-5010

HDR - WTNA JV
1001 BISHOP STREET
SUITE 1600
HONOLULU, HAWAII 96813

MISAWA AIR BASE, JAPAN
DESC 20UX INSTALL ADDITIVE INJECTION SYSTEM

EROSION CONTROL PLAN

SHEET ID
C-102

FILE: DESC20UXC-102.dwg
DATE: 2/23/2021 3:05 PM
OPER: WW*
SCALE: 1:250

IF SHEET IS LESS THAN 594 X 841 MM
REDUCED PRINT = USE GRAPHIC SCALES

RTA SUBMITTAL

PLOT PLAN - PROPOSED CONTRACTOR LAYDOWN AREAS

SCALE = 1:4000

0 80m 160m

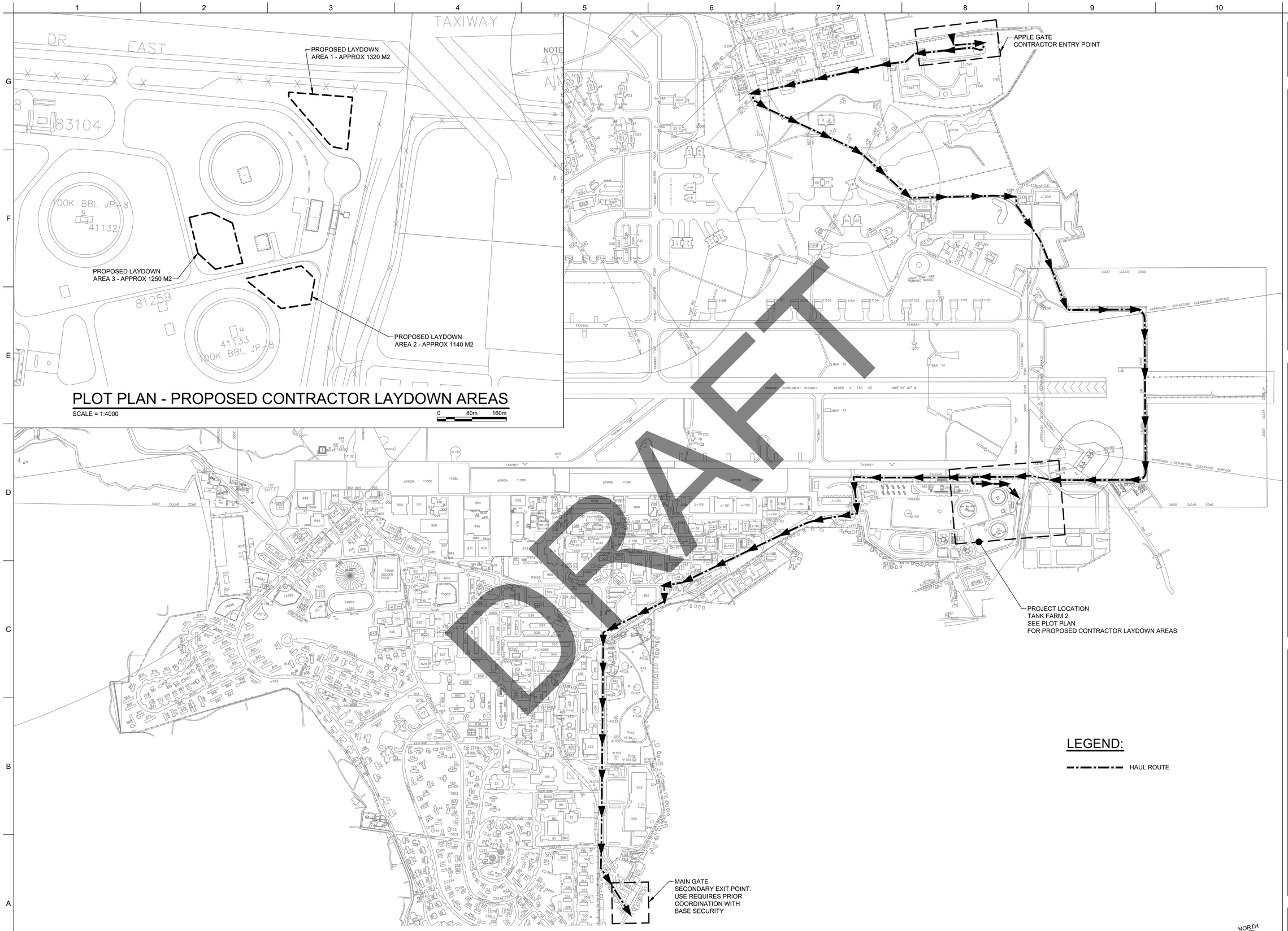

HAUL ROUTE PLAN

SCALE = 1:20000

0 0.4km 0.8km

LEGEND:

HAUL ROUTE

NORTH

DRAFT

US Army Corps of Engineers ©

MARK	DESCRIPTION	DATE

DESIGNED BY: M. NISHIMURA
DRAWN BY: W. WU
CHECKED BY: T. MCCABE
SUBMITTED BY: F. HINO
SIZE: ISO A1
ISSUE DATE: FEBRUARY 2022
SOLICITATION NO.:
CONTRACT NO.: W912HV-17-D-0007
DRAWING CODE: -
FILE NAME: DESC20UXC-103.dwg

U.S. ARMY CORPS OF ENGINEERS
PO BOX 253
APO AP 96343-0010

HDR - WTNA JV
1001 BISHOP STREET
SUITE 1400
HONOLULU, HAWAII 96813

MISAWA AIR BASE, JAPAN
DESC 20UX INSTALL ADDITIVE INJECTION SYSTEM

HAUL ROUTE PLAN AND PROPOSED CONTRACTOR LAYDOWN AREAS

SHEET ID

C-103

FILE: DESC20UXC-103.dwg
DATE: 3/7/2022 6:22 PM
OPER: WW*
SCALE: 1:3000

IF SHEET IS LESS THAN 594 X 841 MM
REDUCED PRINT = USE GRAPHIC SCALES

RTA SUBMITTAL

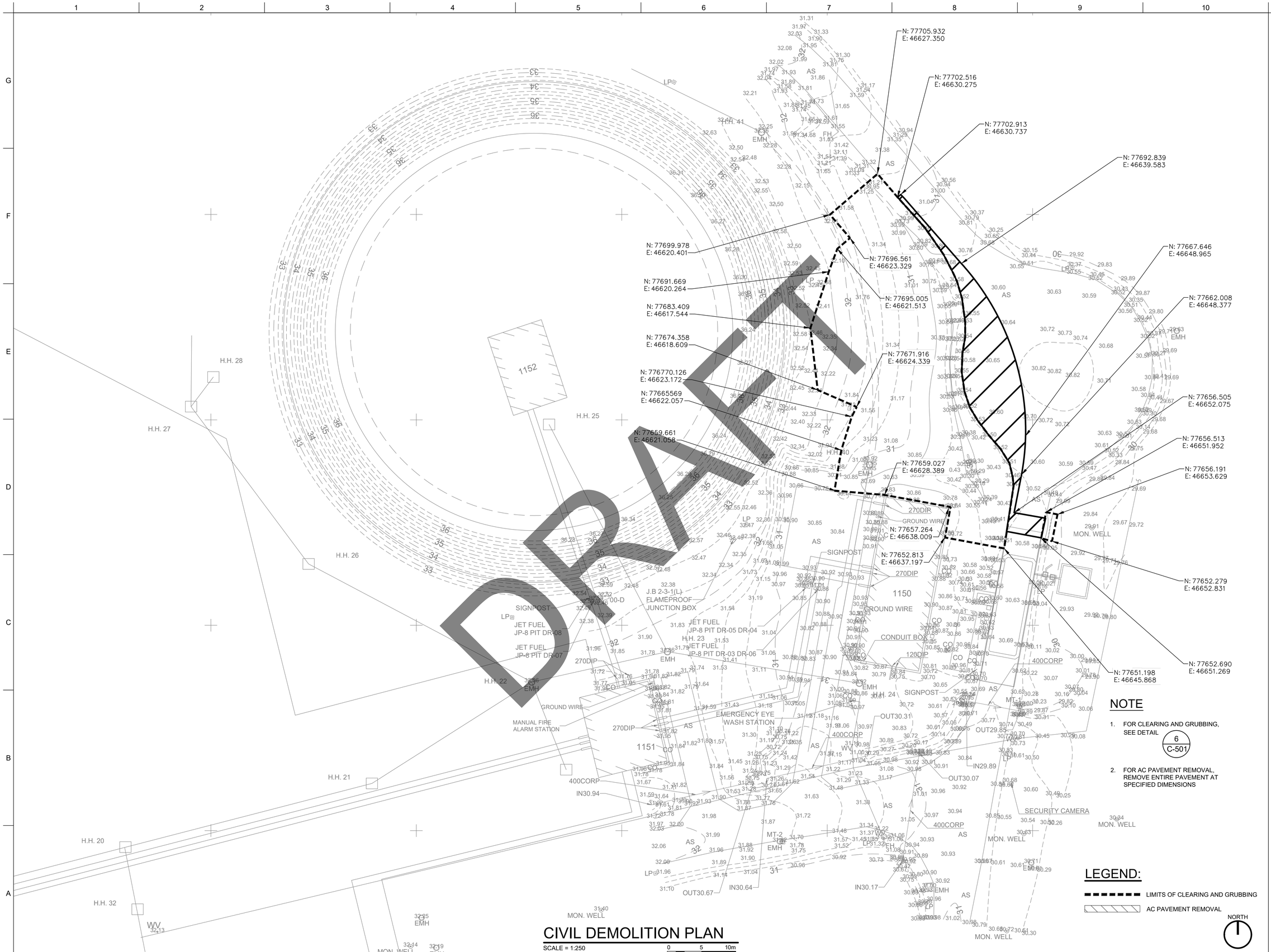

CIVIL DEMOLITION PLAN

SCALE = 1:250

0 5 10m

NOTE

1. FOR CLEARING AND GRUBBING, SEE DETAIL 6 / C-501
2. FOR AC PAVEMENT REMOVAL, REMOVE ENTIRE PAVEMENT AT SPECIFIED DIMENSIONS

LEGEND:

- LIMITS OF CLEARING AND GRUBBING
- AC PAVEMENT REMOVAL

NORTH

US Army Corps of Engineers®

MARK	DESCRIPTION	DATE

DESIGNED BY: M. NISHIMURA
DRAWN BY: C. MIU
CHECKED BY: T. MCCABE
SUBMITTED BY: F. HINO
SIZE: ISO A1
ISSUE DATE: FEBRUARY 2022
SOLICITATION NO.: -
CONTRACT NO.: W912HV-17-D-0007
DRAWING CODE: -
FILE NAME: DESC20UXCD101.dwg

U.S. ARMY CORPS OF ENGINEERS
PACIFIC OCEAN DIVISION
APO AP 96343-5010

HDR - WTNA JV
1001 BISHOP STREET
SUITE 2400
HONOLULU, HAWAII 96813

MISAWA AIR BASE, JAPAN
DESC 20UX INSTALL ADDITIVE INJECTION SYSTEM

CIVIL DEMOLTION PLAN

SHEET ID

CD101

FILE: DESC20UXCD101.dwg
DATE: 1/5/2022 8:09 PM
OPER: WW*
SCALE: 1:250

IF SHEET IS LESS THAN 594 X 841 MM
REDUCED PRINT = USE GRAPHIC SCALES

RTA SUBMITTAL

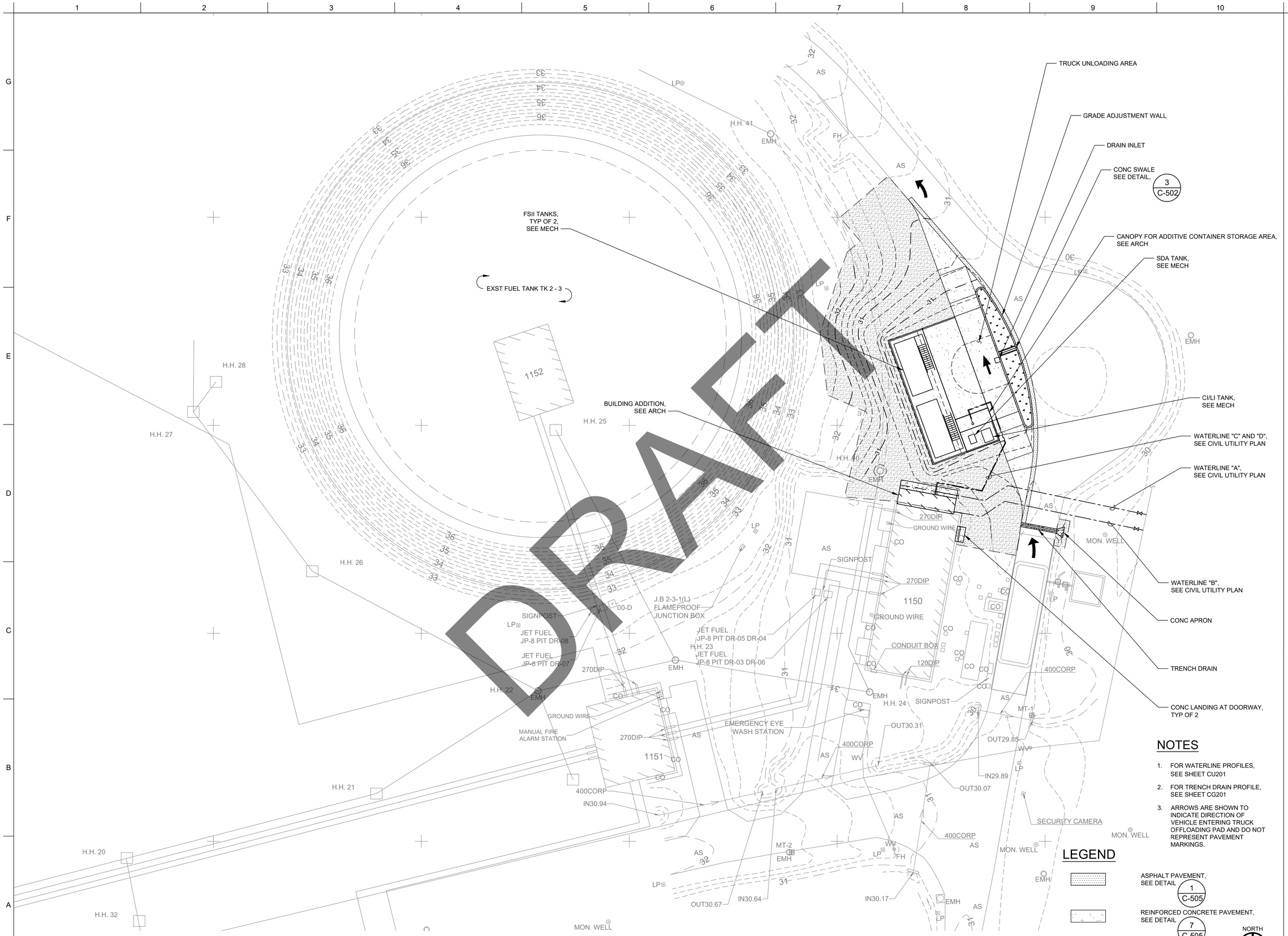

CIVIL SITE PLAN

SCALE = 1:250

0 5 10m

NOTES

1. FOR WATERLINE PROFILES, SEE SHEET CU201
2. FOR TRENCH DRAIN PROFILE, SEE SHEET CG201
3. ARROWS ARE SHOWN TO INDICATE DIRECTION OF VEHICLE ENTERING TRUCK OFFLOADING PAD AND DO NOT REPRESENT PAVEMENT MARKINGS.

LEGEND

ASPHALT PAVEMENT, SEE DETAIL 1 / C-505

REINFORCED CONCRETE PAVEMENT, SEE DETAIL 7 / C-505

HYRDOSEED

NORTH

US Army Corps of Engineers®

MARK	DESCRIPTION	DATE

DESIGNED BY: M. NISHIMURA
DRAWN BY: W. WU
CHECKED BY: T. MCCABE
SUBMITTED BY: F. HINO
SIZE: ISO A1
ISSUE DATE: FEBRUARY 2022
SOLICITATION NO.:
CONTRACT NO.: W912HV-17-D-0007
DRAWING CODE: -
FILE NAME: DESC20UXCS101.dwg

U.S. ARMY CORPS OF ENGINEERS
CEPOA-PM-PMO-MOT
APO AP 96343-0010

HDR - WTNA JV
1001 BISHOP STREET
SUITE 1400
HONOLULU, HAWAII 96813

MISAWA AIR BASE, JAPAN
DESC 20UX INSTALL ADDITIVE INJECTION SYSTEM

CIVIL SITE PLAN

SHEET ID

CS101

FILE: DESC20UXCS101.dwg
DATE: 1/20/2022 8:25 AM
OPER: WW*
SCALE: 1:250

IF SHEET IS LESS THAN 594 X 841 MM
REDUCED PRINT = USE GRAPHIC SCALES

RTA SUBMITTAL

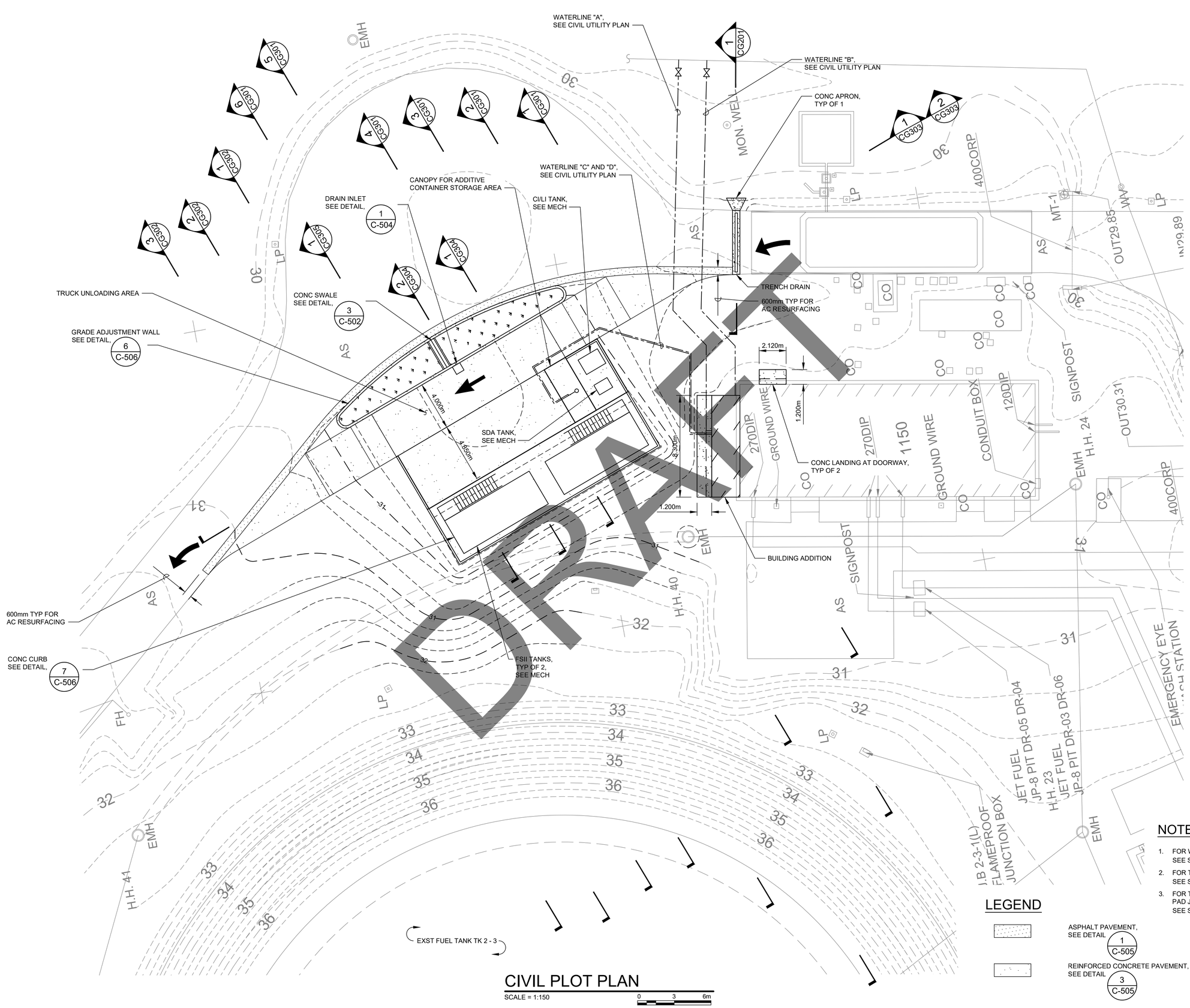

NOTES

1. FOR WATERLINE PROFILES, SEE SHEET CU201
2. FOR TRENCH DRAIN PROFILE, SEE SHEET CG201
3. FOR TRENCH OFFLOADING PAD JOINTING PLAN, SEE SHEET CG102

LEGEND

ASPHALT PAVEMENT, SEE DETAIL 1 C-505

REINFORCED CONCRETE PAVEMENT, SEE DETAIL 3 C-505

CIVIL PLOT PLAN

SCALE = 1:150

US Army Corps of Engineers®

MARK	DESCRIPTION	DATE

DESIGNED BY: M. NISHIMURA
DRAWN BY: W. WU
CHECKED BY: T. MCCABE
SUBMITTED BY: F. HINO
SIZE: ISO A1
ISSUE DATE: FEBRUARY 2022
SOLICITATION NO.:
CONTRACT NO.: W912HV-17-D-0007
DRAWING CODE: -
FILE NAME: DESC20UXCS401.dwg

U.S. ARMY CORPS OF ENGINEERS
PACIFIC OCEAN DIV
APO AP 96343-5010

HDR - WTNA JV
1001 BISHOP STREET
SUITE 2400
HONOLULU, HAWAII 96813

MISAWA AIR BASE, JAPAN
DESC 20UX INSTALL ADDITIVE INJECTION SYSTEM

CIVIL PLOT PLAN

SHEET ID
CS401

FILE: DESC20UXCS401.dwg
DATE: 1/20/2022 8:27 AM
OPER: WW*
SCALE: 1:150

IF SHEET IS LESS THAN 594 X 841 MM
REDUCED PRINT = USE GRAPHIC SCALES

RTA SUBMITTAL

CURBING CURVE DATA

NUMBER	START STATION	END STATION	Δ	Δ/2	RADIUS	TANGENT	LINE/CHORD LENGTH	LINE/CHORD DIRECTION	LENGTH OF CURVE	RADIUS CENTER N/E
L1	0+050.456	0+050.614	163.311	81.656	0.550	3.751	1.083	N61° 53' 33.000"E	1.559	N: 77689.174 E: 46640.716
L2	0+050.614	0+030.240	33.793	16.897	34.950	10.619	20.316	S70° 2' 3.840"E	20.591	N: 77668.523 E: 46613.226
L3	0+030.240	0+030.456	163.311	81.656	0.550	3.751	1.083	S79° 59' 58.920"W	1.559	N: 77670.384 E: 46647.586

BASELINE LINE AND CURVE DATA

NUMBER	START STATION	END STATION	Δ	Δ/2	RADIUS	TANGENT	LINE/CHORD LENGTH	LINE/CHORD DIRECTION	LENGTH OF CURVE	RADIUS CENTER N/E
C1	0+015.683	0+021.246	30.443	15.222	8.000	2.171	4.202	N59° 47' 13"W	4.251	N: 77657.433 E: 46638.711
C2	0+063.774	0+067.463	20.425	10.213	8.000	1.441	2.837	N85° 13' 38"W	2.849	N: 77697.332 E: 46624.189
B1			30.78	15.39						
B2			20.36	10.18						

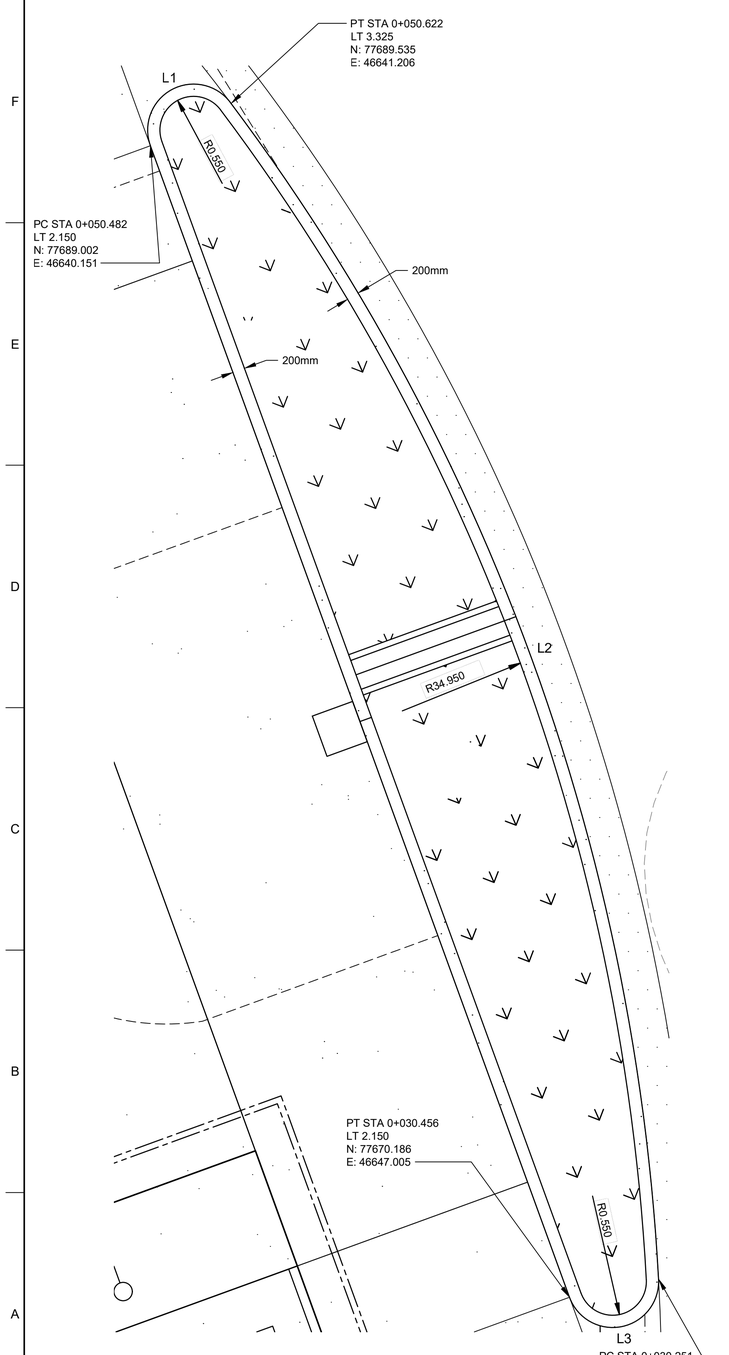

PLOT PLAN

SCALE = 1:50

0 1 2m

SCALE: 1:50

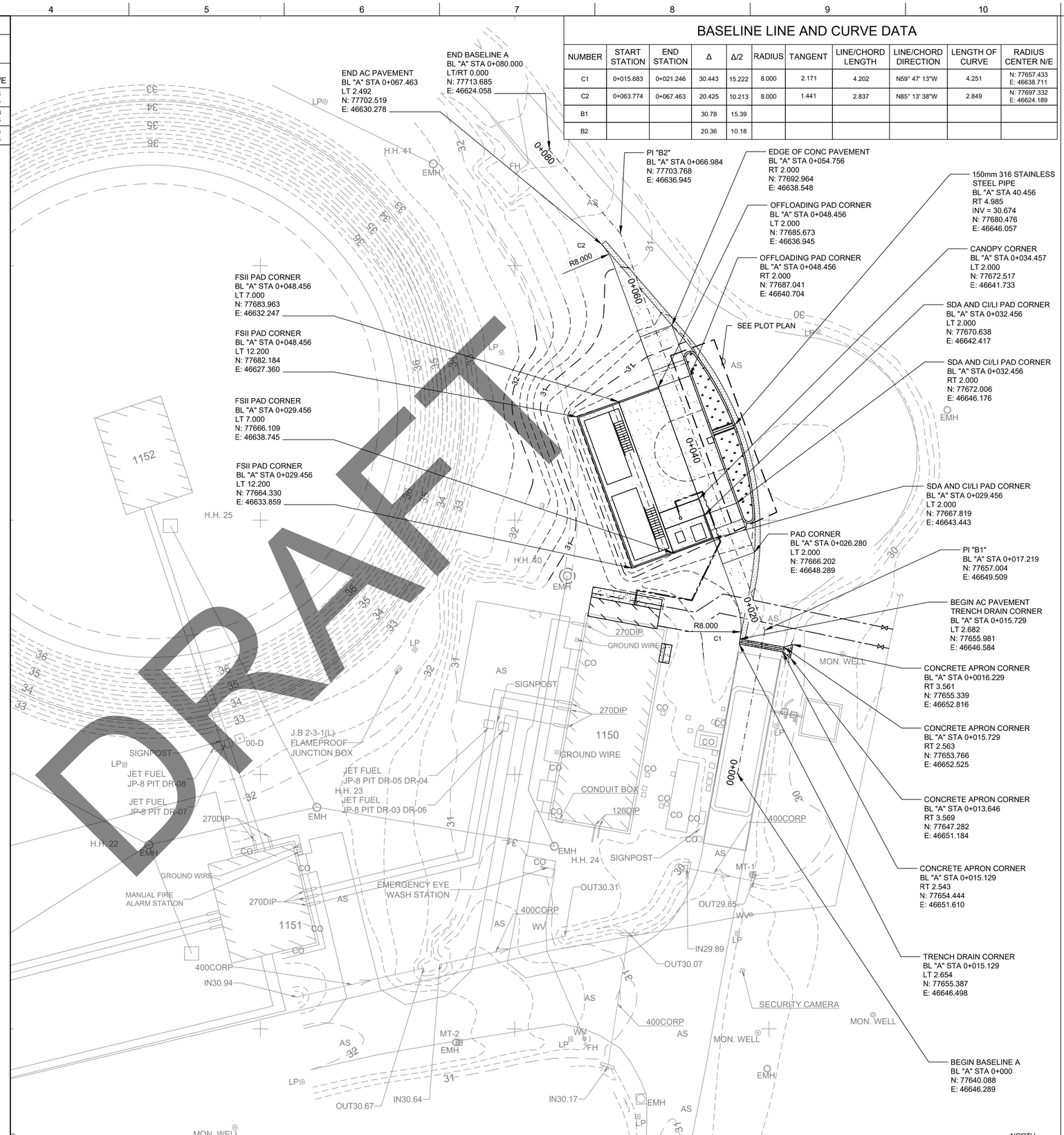

GEOMETRIC PLAN

SCALE = 1:250

0 5 10m

NORTH

US Army Corps of Engineers®

MARK	DESCRIPTION	DATE

ISSUE DATE: FEBRUARY 2022
SOLICITATION NO.: -
CONTRACT NO.: W912HV-17-D-0007
DRAWING CODE: -
DESIGNED BY: M. NISHIMURA
DRAWN BY: C. MILLER
CHECKED BY: T. MCCABE
SUBMITTED BY: F. HINO
SIZE: ISO A1
FILE NAME: DESC20UXCP101.dwg

U.S. ARMY CORPS OF ENGINEERS
JAPAN DISTRICT
APO AP 96343-5010

HDR - WTNA JV
1001 BISHOP STREET
SUITE 2400
HONOLULU, HAWAII 96813

MISAWA AIR BASE, JAPAN
DESC 20UX INSTALL ADDITIVE INJECTION SYSTEM

GEOMETRIC PLAN

SHEET ID

CP101

FILE: DESC20UXCP101.dwg
DATE: 1/20/2022 8:28 AM
OPER: WW*
SCALE: 1:250

IF SHEET IS LESS THAN 594 X 841 MM
REDUCED PRINT = USE GRAPHIC SCALES

RTA SUBMITTAL

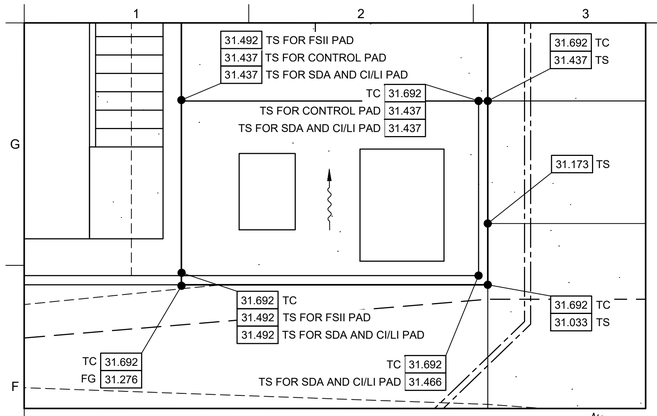

PLOT PLAN 1

SCALE = 1:50

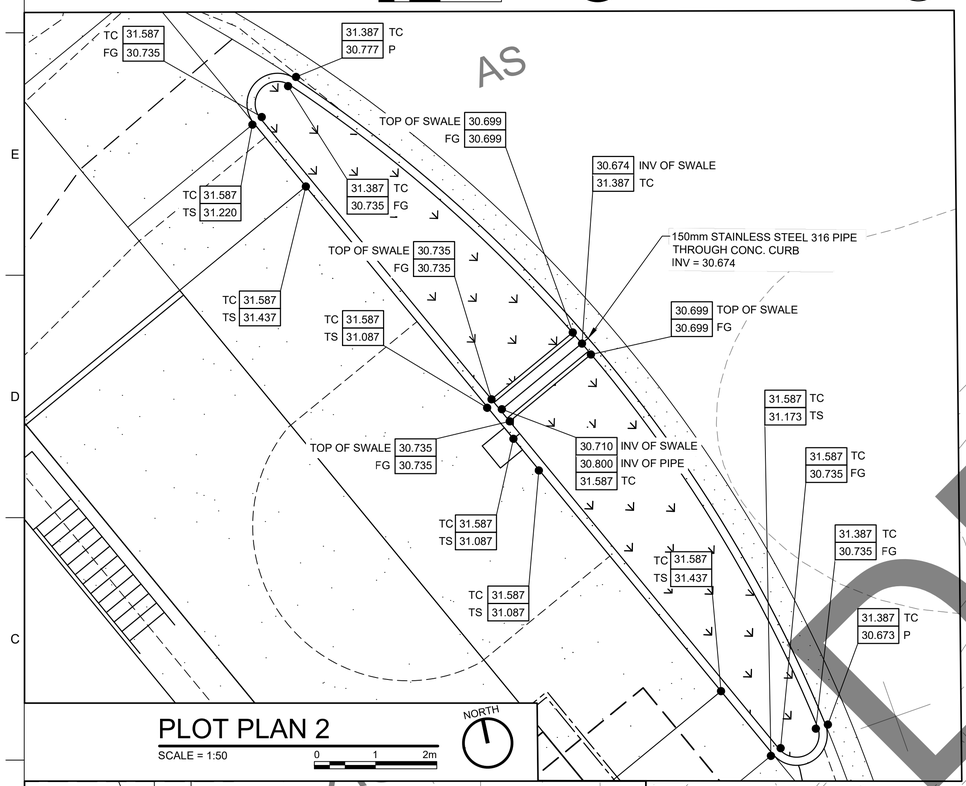

PLOT PLAN 2

SCALE = 1:50

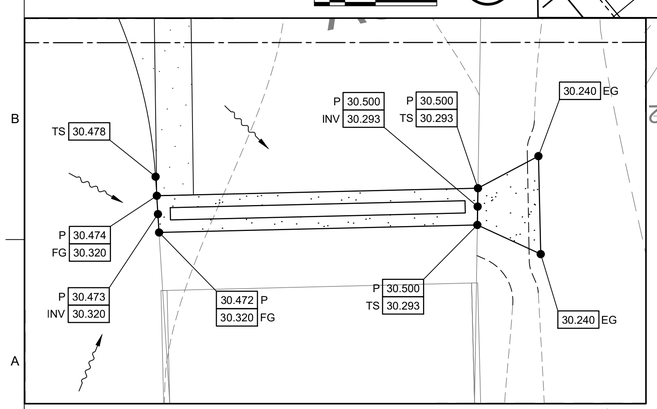

PLOT PLAN 3

SCALE = 1:50

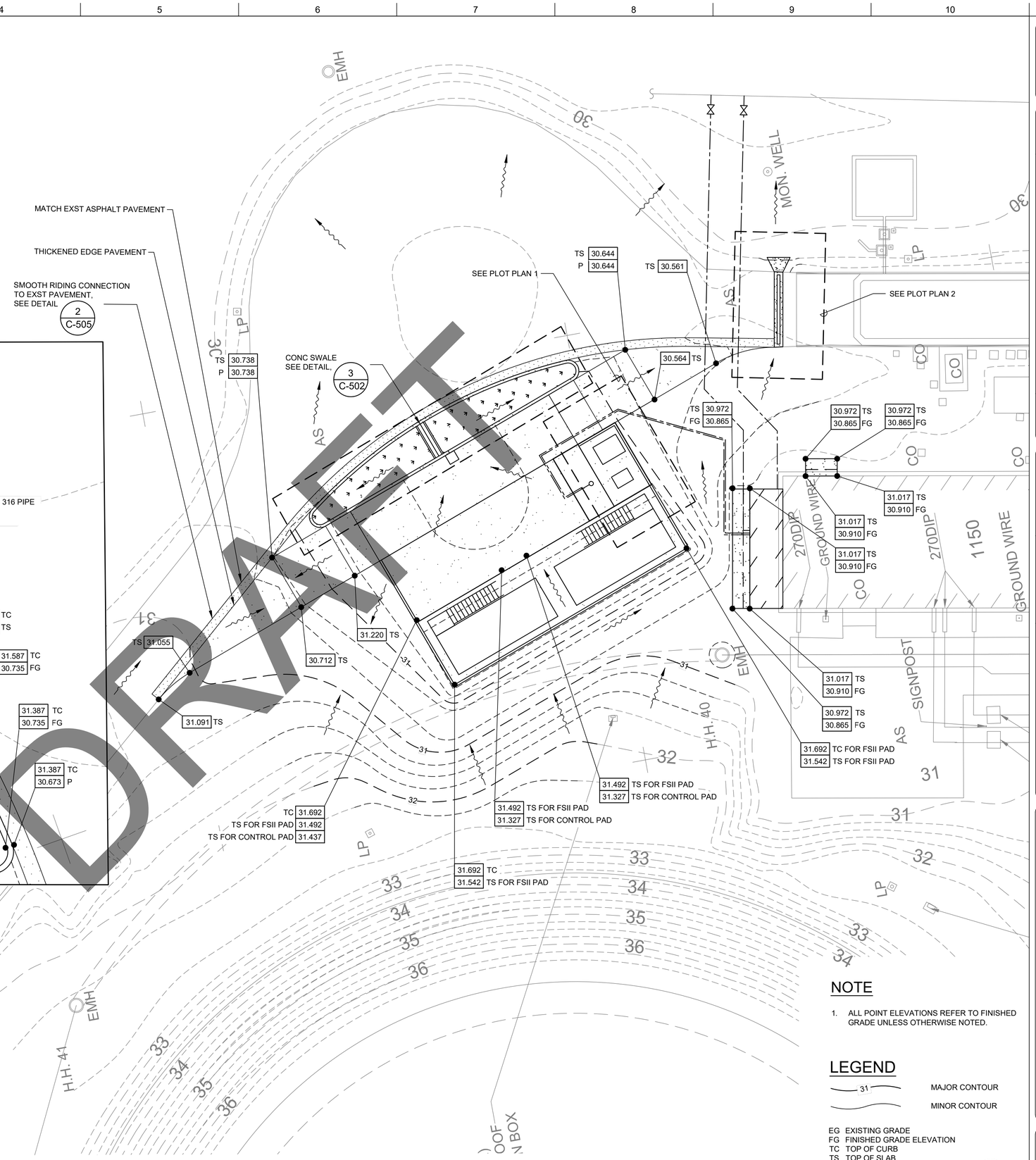

GRADING AND DRAINAGE PLAN 1

SCALE = 1:150

DRAFT

NOTE

1. ALL POINT ELEVATIONS REFER TO FINISHED GRADE UNLESS OTHERWISE NOTED.

LEGEND

31 MAJOR CONTOUR

MINOR CONTOUR

EG EXISTING GRADE
FG FINISHED GRADE ELEVATION
TC TOP OF CURB
TS TOP OF SLAB
P PAVEMENT

NORTH

US Army Corps of Engineers®

MARK	DESCRIPTION	DATE

ISSUE DATE: FEBRUARY 2022
SOLICITATION NO.:
W912HV-17-B-0007
CONTRACT NO.:
W912HV-17-D-0007
DRAWING CODE:
-
DESIGNED BY: M. NISHIMURA
DRAWN BY: W. WU
CHECKED BY: T. MCCABE
SUBMITTED BY: F. HINO
SIZE: ISO A1
FILE NAME: DESC20UXCG101.dwg

U.S. ARMY CORPS OF ENGINEERS
JAPAN DISTRICT
APO AP 96343-5010

HDR - WTNA JV
1001 BISHOP STREET
SUITE 2400
HONOLULU, HAWAII 96813

MISAWA AIR BASE, JAPAN
DESC 20UX INSTALL ADDITIVE INJECTION SYSTEM

GRADING AND DRAINAGE PLAN 1

SHEET ID

CG101

FILE: DESC20UXCG101.dwg
DATE: 2/16/2022 3:17 PM
OPER: WW*
SCALE: 1:150

IF SHEET IS LESS THAN 594 X 841 MM
REDUCED PRINT = USE GRAPHIC SCALES

RTA SUBMITTAL

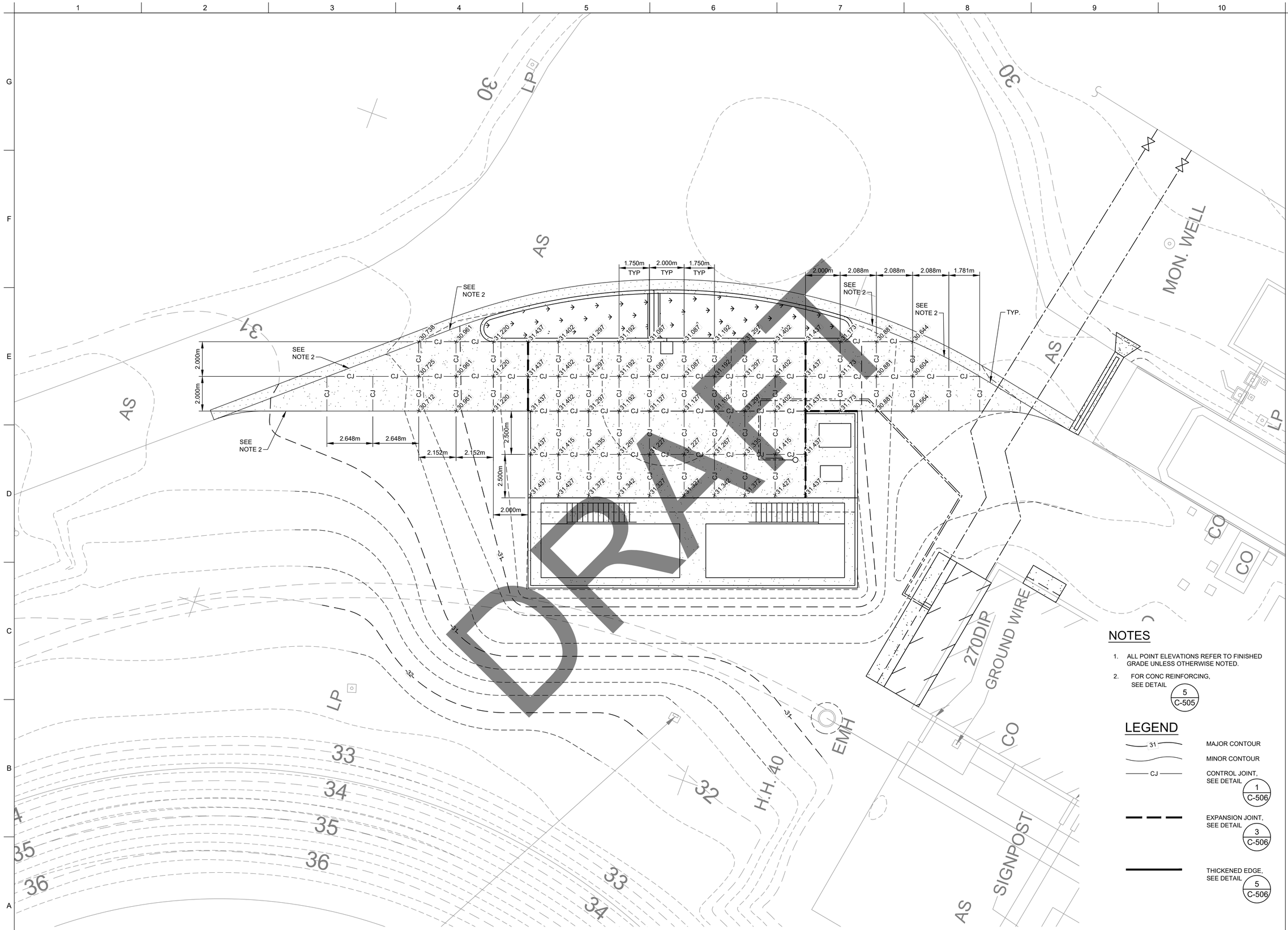

NOTES

1. ALL POINT ELEVATIONS REFER TO FINISHED GRADE UNLESS OTHERWISE NOTED.
2. FOR CONC REINFORCING, SEE DETAIL 5/C-505

LEGEND

- MAJOR CONTOUR (31)
- MINOR CONTOUR
- CONTROL JOINT, SEE DETAIL 1/C-506
- EXPANSION JOINT, SEE DETAIL 3/C-506
- THICKENED EDGE, SEE DETAIL 5/C-506

NORTH

GRADING AND DRAINAGE PLAN 2

SCALE = 1:100 (0 2 4m)

US Army Corps of Engineers®

MARK	DESCRIPTION	DATE

DESIGNED BY: M. NISHIMURA
DRAWN BY: W. WU
CHECKED BY: T. MCCABE
SUBMITTED BY: F. HINO
SIZE: ISO A1
ISSUE DATE: FEBRUARY 2022
SOLICITATION NO.:
CONTRACT NO.: W912HV-17-D-0007
DRAWING CODE: -
FILE NAME: DESC20UXCG102.dwg

U.S. ARMY CORPS OF ENGINEERS
FORT SHAFTER
APO AP 96343-5010

HDR - WTNA JV
1001 BISHOP STREET
SUITE 1400
HONOLULU, HAWAII 96813

MISAWA AIR BASE, JAPAN
DESC 20UX INSTALL ADDITIVE INJECTION SYSTEM

GRADING AND DRAINAGE PLAN 2

SHEET ID
CG102

FILE: DESC20UXCG102.dwg
DATE: 1/7/2022 1:46 PM
OPER: WW*
SCALE: 1:150

IF SHEET IS LESS THAN 594 X 841 MM
REDUCED PRINT = USE GRAPHIC SCALES

RTA SUBMITTAL

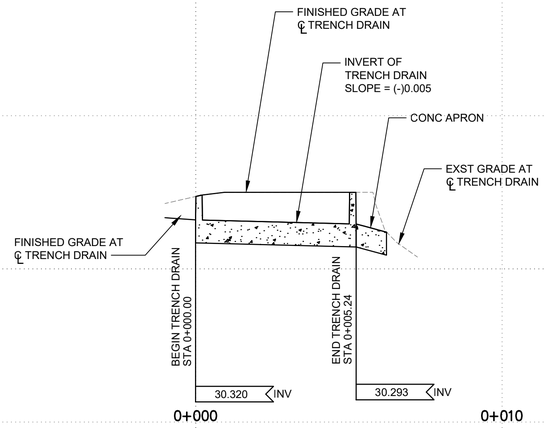

1 TRENCH DRAIN PROFILE

SCALE= HORIZ 1:100
VERT 1:20

0 2 4m
SCALE: 1:100
0 0.4 0.8m
SCALE: 1:20

DRAFT

US Army Corps of Engineers®

MARK	DESCRIPTION	DATE

DESIGNED BY: M. NISHIMURA
DRAWN BY: W. WU
CHECKED BY: T. MCCABE
SUBMITTED BY: F. HINO
SIZE: ISO A1
ISSUE DATE: FEBRUARY 2022
SOLICITATION NO.: -
CONTRACT NO.: W912HV-17-D-0007
DRAWING CODE: -
FILE NAME: DESC20UXCG201.dwg

U.S. ARMY CORPS OF ENGINEERS
JAPAN DISTRICT
APO AP 96343-5010

HDR - WTNA JV
1001 BISHOP STREET
SUITE 2400
HONOLULU, HAWAII 96813

MISAWA AIR BASE, JAPAN
DESC 20UX INSTALL ADDITIVE INJECTION SYSTEM

TRENCH DRAIN PROFILE

SHEET ID
CG201

FILE: DESC20UXCG201.dwg
DATE: 2/15/2021 10:31 AM
OPER: WW*
SCALE: 1:100

IF SHEET IS LESS THAN 594 X 841 MM
REDUCED PRINT = USE GRAPHIC SCALES

RTA SUBMITTAL

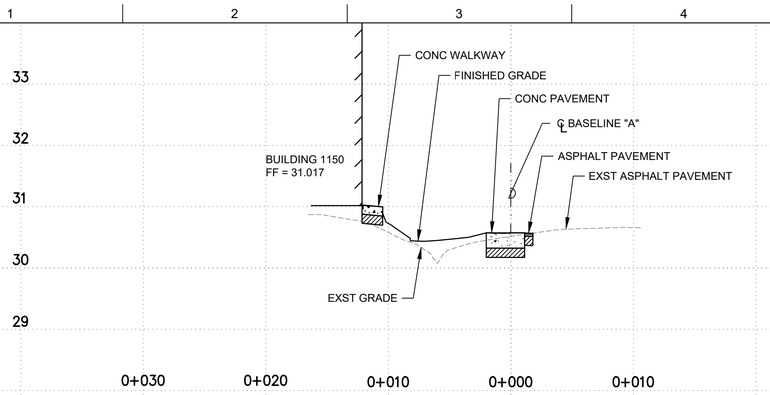

1 SITE SECTION AT BL "A" STA 0+024.456

SCALE= HORIZ 1:250
VERT 1:50

SCALE: 1:250
SCALE: 1:50

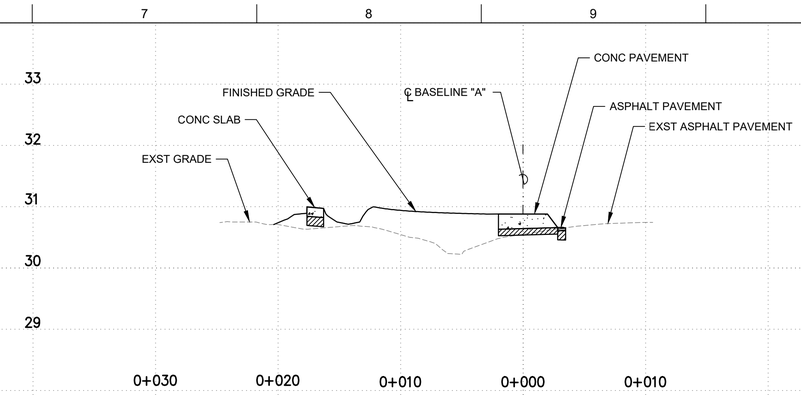

2 SITE SECTION AT BL "A" STA 0+028.456

SCALE= HORIZ 1:250
VERT 1:50

SCALE: 1:250
SCALE: 1:50

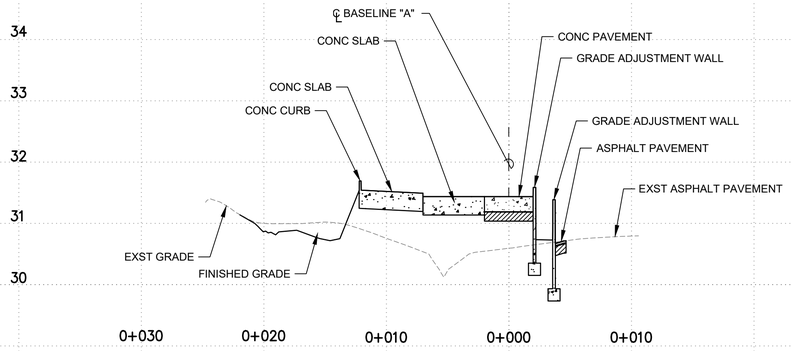

3 SITE SECTION AT BL "A" STA 0+032.456

SCALE= HORIZ 1:250
VERT 1:50

SCALE: 1:250
SCALE: 1:50

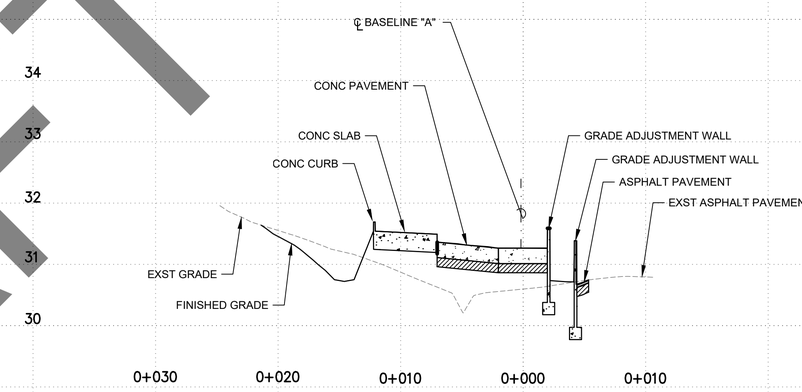

4 SITE SECTION AT BL "A" STA 0+036.456

SCALE= HORIZ 1:250
VERT 1:50

SCALE: 1:250
SCALE: 1:50

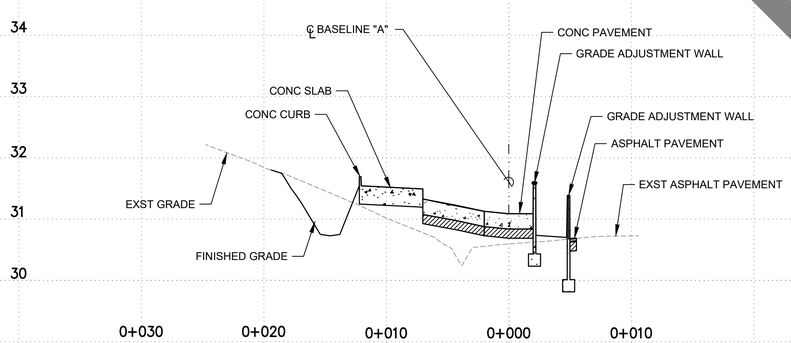

5 SITE SECTION AT BL "A" STA 0+040.456

SCALE= HORIZ 1:250
VERT 1:50

SCALE: 1:250
SCALE: 1:50

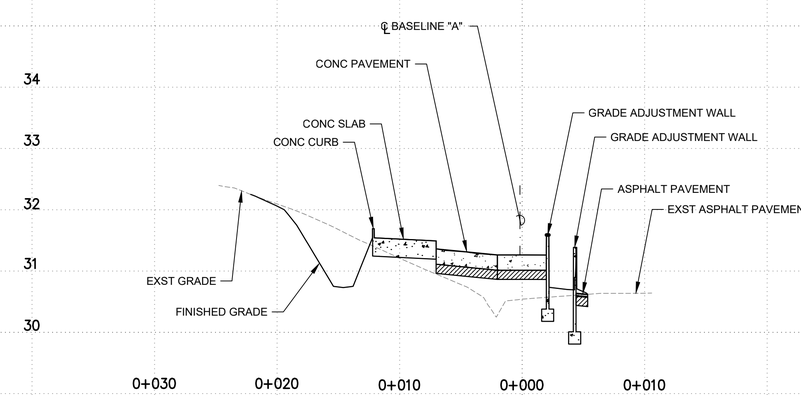

6 SITE SECTION AT BL "A" STA 0+044.456

SCALE= HORIZ 1:250
VERT 1:50

SCALE: 1:250
SCALE: 1:50

DRAFT

US Army Corps of Engineers®

MARK	DESCRIPTION	DATE

DESIGNED BY: M. NISHIMURA
DRAWN BY: W. WU
CHECKED BY: T. MCCABE
SUBMITTED BY: F. HINO
SIZE: ISO A1
ISSUE DATE: FEBRUARY 2022
SOLICITATION NO.:
CONTRACT NO.: W912HV-17-D-0007
DRAWING CODE: -
FILE NAME: DESC20UXCG301.dwg

U.S. ARMY CORPS OF ENGINEERS
JAPAN DISTRICT
APO AP 96343-5010

HDR - WTNA JV
1001 BISHOP STREET
SUITE 2400
HONOLULU, HAWAII 96813

MISAWA AIR BASE, JAPAN
DESC 20UX INSTALL ADDITIVE INJECTION SYSTEM

SITE SECTIONS 1

SHEET ID
CG301

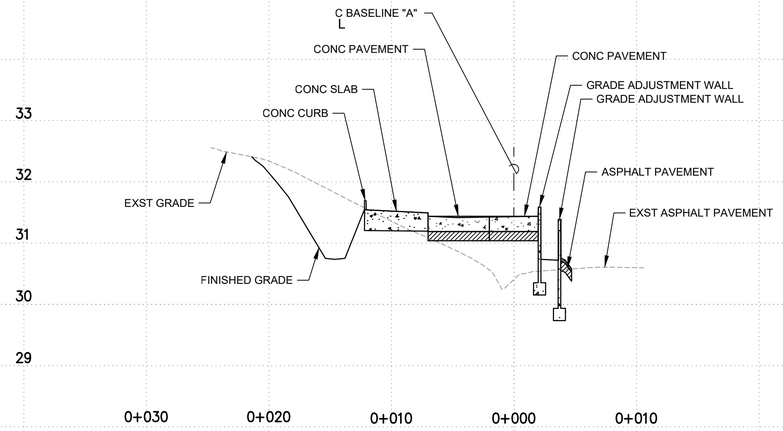

1 SITE SECTION AT BL "A" STA 0+048.296

SCALE= HORIZ 1:250
VERT 1:50

0 5 10m
SCALE: 1:250
0 1 2m
SCALE: 1:50

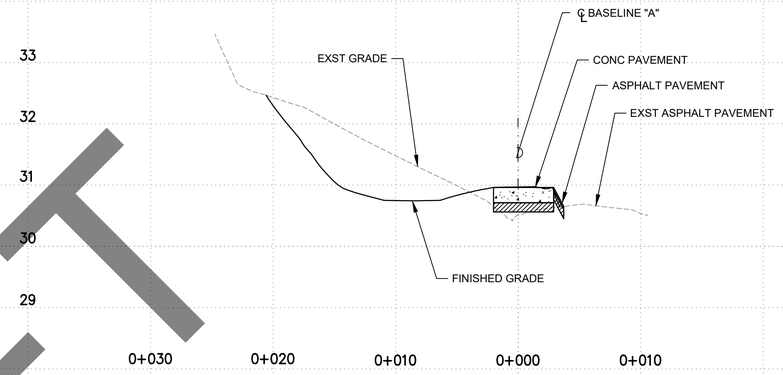

2 SITE SECTION AT BL "A" STA 0+052.296

SCALE= HORIZ 1:250
VERT 1:50

0 5 10m
SCALE: 1:250
0 1 2m
SCALE: 1:50

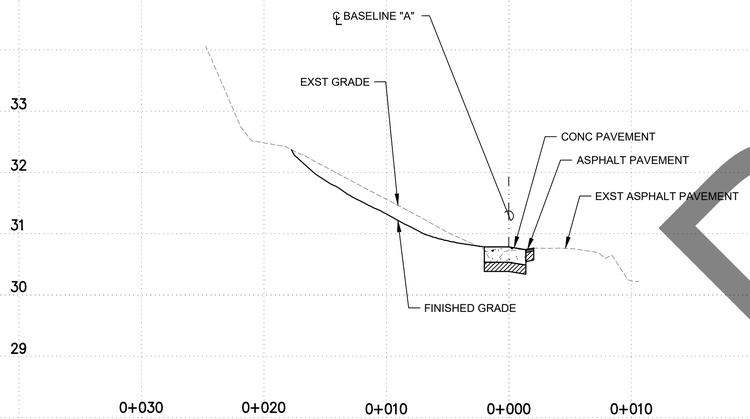

3 SITE SECTION AT BL "A" STA 0+056.296

SCALE= HORIZ 1:250
VERT 1:50

0 5 10m
SCALE: 1:250
0 1 2m
SCALE: 1:50

DRAFT

US Army Corps of Engineers®

MARK	DESCRIPTION	DATE

DESIGNED BY: M. NISHIMURA
DRAWN BY: W. WU
CHECKED BY: T. MCCABE
SUBMITTED BY: F. HINO
SIZE: ISO A1
ISSUE DATE: FEBRUARY 2022
SOLICITATION NO.:
CONTRACT NO.: W912HV-17-D-0007
DRAWING CODE: -
FILE NAME: DESC20UXCG302.dwg

U.S. ARMY CORPS OF ENGINEERS
JAPAN DISTRICT
APO AP 96343-5010

HDR - WTNA JV
1001 BISHOP STREET
SUITE 2400
HONOLULU, HAWAII 96813

MISAWA AIR BASE, JAPAN
DESC 20UX INSTALL ADDITIVE INJECTION SYSTEM

SITE SECTIONS 2

SHEET ID
CG302

FILE: DESC20UXCG302.dwg
DATE: 1/6/2022 7:30 PM
OPER: WW*
SCALE: 1:250

IF SHEET IS LESS THAN 594 X 841 MM
REDUCED PRINT = USE GRAPHIC SCALES

RTA SUBMITTAL

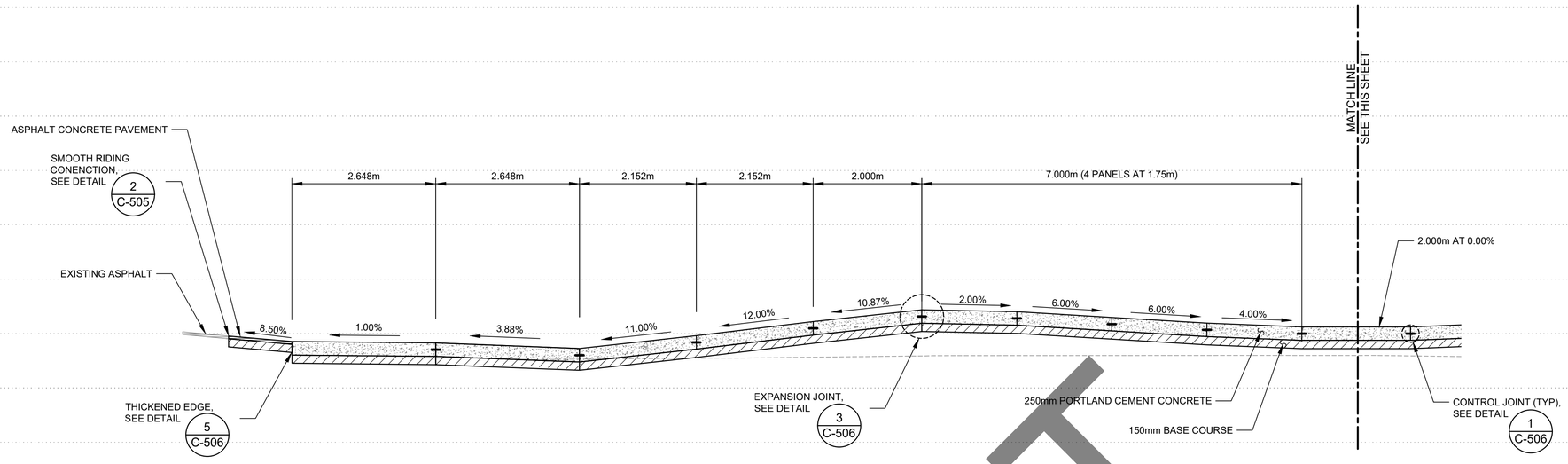

1 SITE SECTION - TRUCK OFFLOAD PAD

SCALE: 1:50

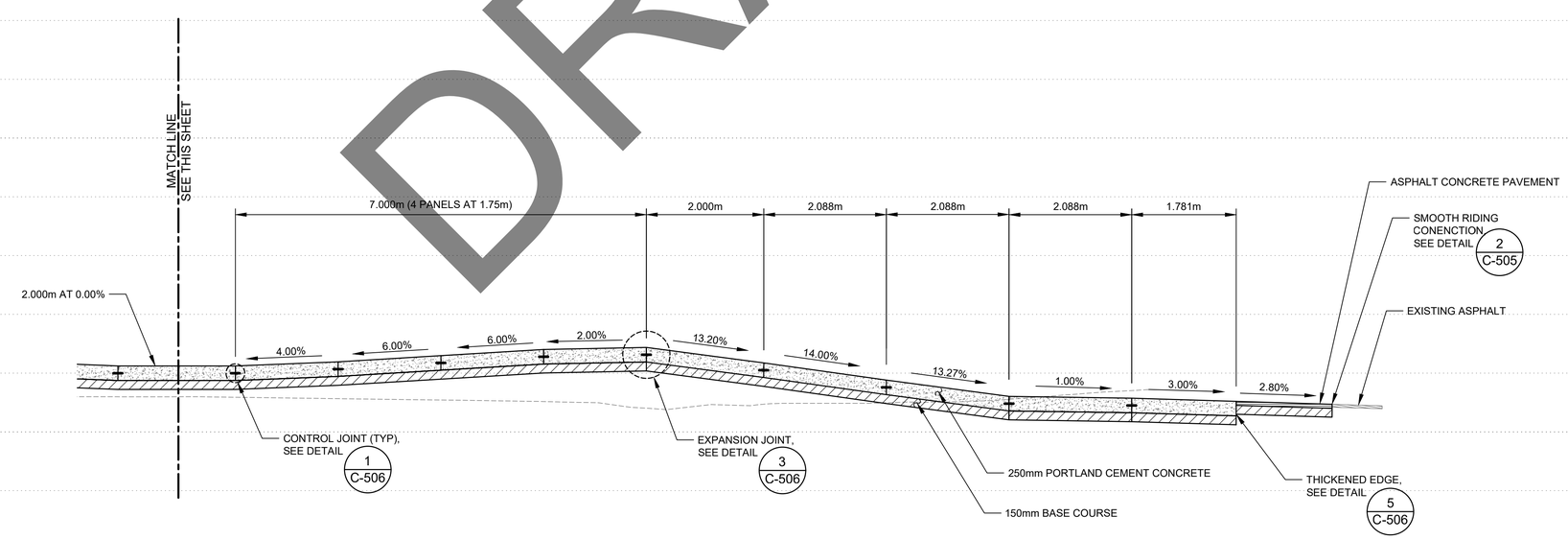

2 SITE SECTION - TRUCK OFFLOAD PAD

SCALE: 1:50

DRAFT

US Army Corps of Engineers®

MARK	DESCRIPTION	DATE

DESIGNED BY: M. NISHIMURA
DRAWN BY: C. MIU
CHECKED BY: T. MCCABE
SUBMITTED BY: F. HINO
SIZE: ISO A1
ISSUE DATE: FEBRUARY 2022
SOLICITATION NO.: -
CONTRACT NO.: W912HV-17-D-0007
DRAWING CODE: -
FILE NAME: DESC20UXCG303.dwg

U.S. ARMY CORPS OF ENGINEERS
JAPAN DISTRICT
APO AP 96343-5010

HDR - WTNA JV
1001 BISHOP STREET
SUITE 2400
HONOLULU, HAWAII 96813

MISAWA AIR BASE, JAPAN
DESC 20UX INSTALL ADDITIVE INJECTION SYSTEM

SITE SECTIONS 3

SHEET ID

CG303

FILE: DESC20UXCG303.dwg
DATE: 1/6/2022 8:28 PM
OPER: WW*
SCALE: 1:250

IF SHEET IS LESS THAN 594 X 841 MM
REDUCED PRINT = USE GRAPHIC SCALES

RTA SUBMITTAL

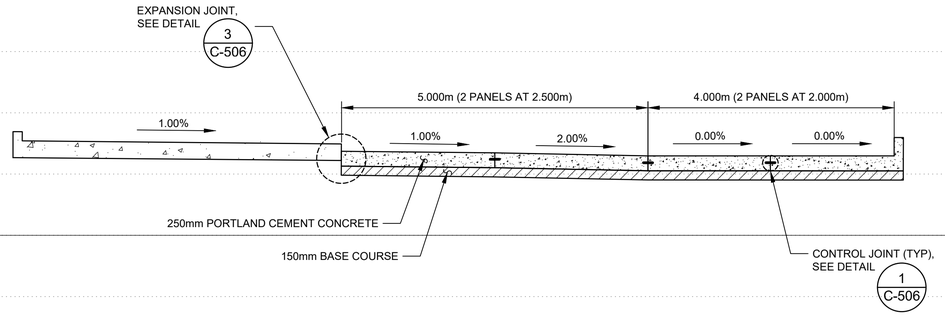

1 SITE SECTION - TRUCK OFFLOAD PAD

SCALE: 1:50

0 1 2m

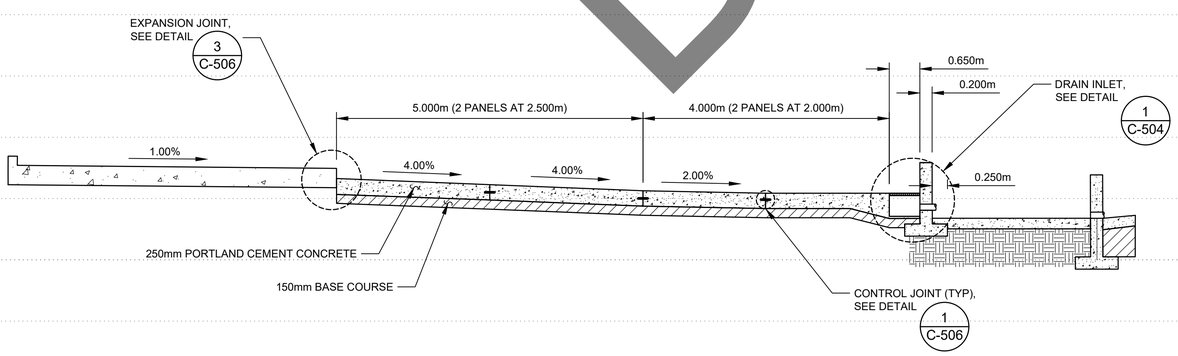

2 SITE SECTION - TRUCK OFFLOAD PAD

SCALE: 1:50

0 1 2m

DRAFT

US Army Corps of Engineers®

MARK	DESCRIPTION	DATE

DESIGNED BY: M. NISHIMURA
DRAWN BY: C. MIU
CHECKED BY: T. MCCABE
SUBMITTED BY: F. HINO
SIZE: ISO A1
ISSUE DATE: FEBRUARY 2022
SOLICITATION NO.:
CONTRACT NO.: W912HV-17-D-0007
DRAWING CODE: -
FILE NAME: DESC20UXCG304.dwg

U.S. ARMY CORPS OF ENGINEERS
JAPAN DISTRICT
APO AP 96343-5010

HDR - WTNA JV
1001 BISHOP STREET
SUITE 2400
HONOLULU, HAWAII 96813

MISAWA AIR BASE, JAPAN
DESC 20UX INSTALL ADDITIVE INJECTION SYSTEM

SITE SECTIONS 4

SHEET ID

CG304

FILE: DESC20UXCG304.dwg
DATE: 1/6/2022 7:13 PM OPER: WW* SCALE: 1:250

IF SHEET IS LESS THAN 594 X 841 MM
REDUCED PRINT = USE GRAPHIC SCALES

RTA SUBMITTAL

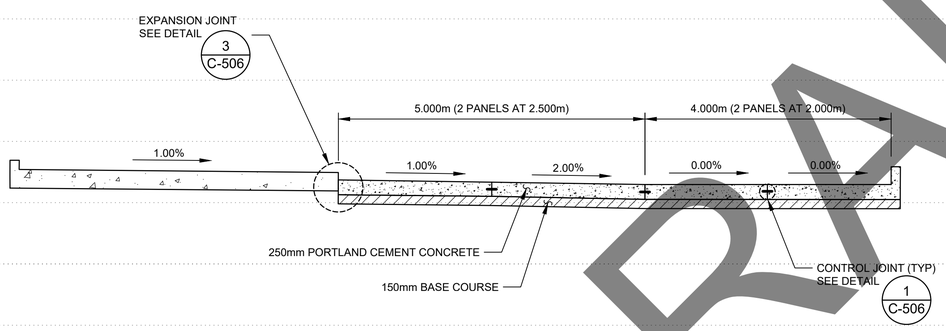

1 SITE SECTION - TRUCK OFFLOAD PAD

SCALE: 1:50

0 1 2m

DRAFT

US Army Corps of Engineers®

MARK	DESCRIPTION	DATE

DESIGNED BY: M. NISHIMURA
DRAWN BY: C. MIU
CHECKED BY: T. MCCABE
SUBMITTED BY: F. HINO
SIZE: ISO A1
ISSUE DATE: FEBRUARY 2022
SOLICITATION NO.:
CONTRACT NO.: W912HV-17-D-0007
DRAWING CODE: -
FILE NAME: DESC20UXCG305.dwg

U.S. ARMY CORPS OF ENGINEERS
JAPAN DISTRICT
APO AP 96343-5010

HDR - WTNA JV
1001 BISHOP STREET
SUITE 400
HONOLULU, HAWAII 96813

MISAWA AIR BASE, JAPAN
DESC 20UX INSTALL ADDITIVE INJECTION SYSTEM

SITE SECTIONS 5

SHEET ID

CG305

FILE: DESC20UXCG305.dwg
DATE: 1/5/2022 9:24 PM
OPER: WW*
SCALE: 1:250

IF SHEET IS LESS THAN 594 X 841 MM
REDUCED PRINT = USE GRAPHIC SCALES

RTA SUBMITTAL

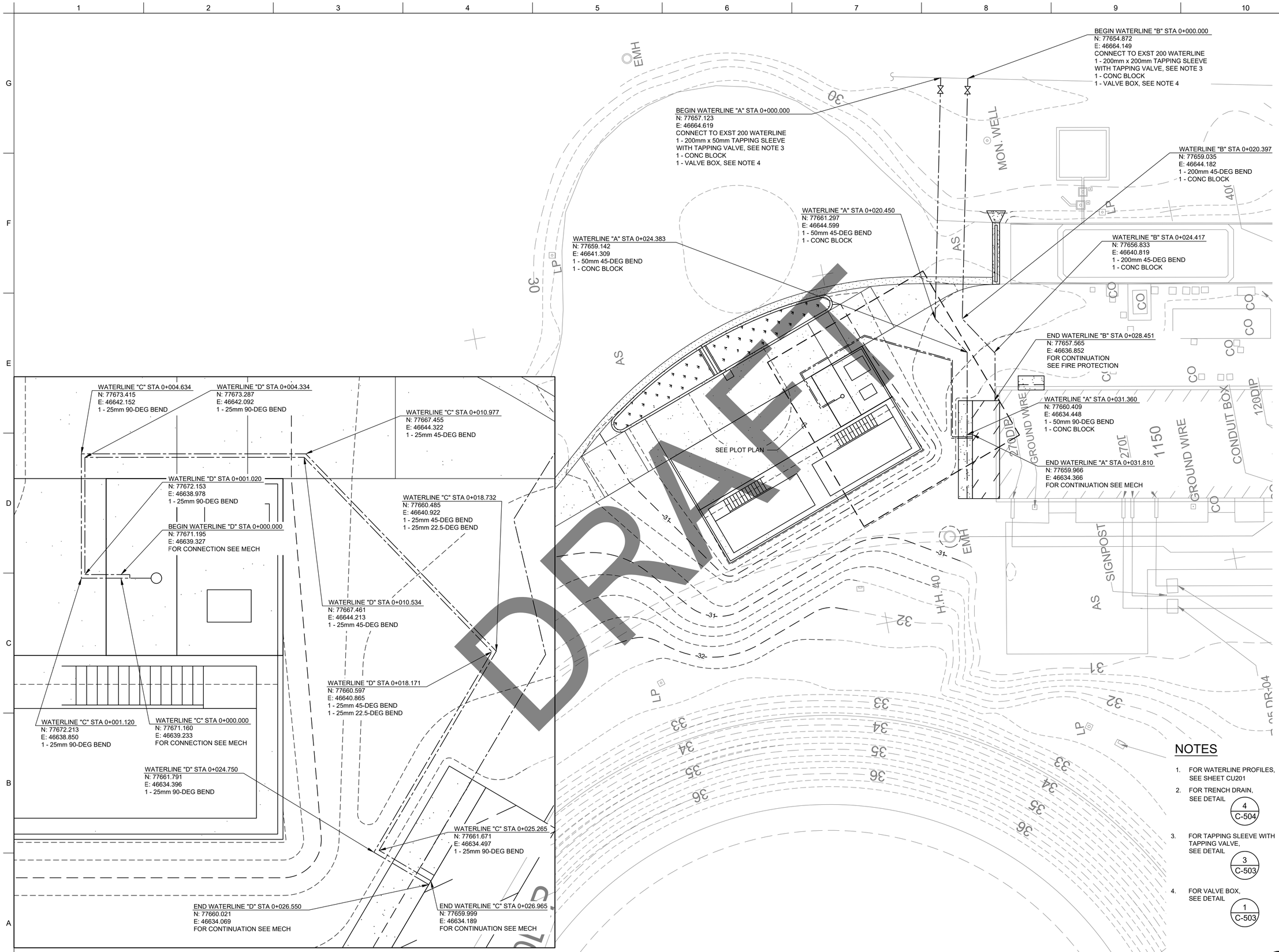

PLOT PLAN

SCALE = 1:50 (0, 1, 2m)

CIVIL UTILITY PLAN

SCALE = 1:150 (0, 3, 6m)

US Army Corps of Engineers®

MARK	DESCRIPTION	DATE

DESIGNED BY: M. NISHIMURA
DRAWN BY: W. WU
CHECKED BY: T. MCCABE
SUBMITTED BY: F. HINO
SIZE: ISO A1
ISSUE DATE: FEBRUARY 2022
SOLICITATION NO.:
CONTRACT NO.: W912HV-17-D-0007
DRAWING CODE: -
FILE NAME: DESC20UXCU101.dwg

U.S. ARMY CORPS OF ENGINEERS
POH-PACIFIC OCEAN DISTRICT
APO AP 96343-5010

HDR - WTNA JV
1001 BISHOP STREET
SUITE 1400
HONOLULU, HAWAII 96813

MISAWA AIR BASE, JAPAN
DESC 20UX INSTALL ADDITIVE INJECTION SYSTEM

CIVIL UTILITY PLAN

SHEET ID
CU101

FILE: DESC20UXCU101.dwg
DATE: 1/7/2022 2:15 PM
OPER: WW*
SCALE: 1:150

IF SHEET IS LESS THAN 594 X 841 MM
REDUCED PRINT = USE GRAPHIC SCALES

RTA SUBMITTAL

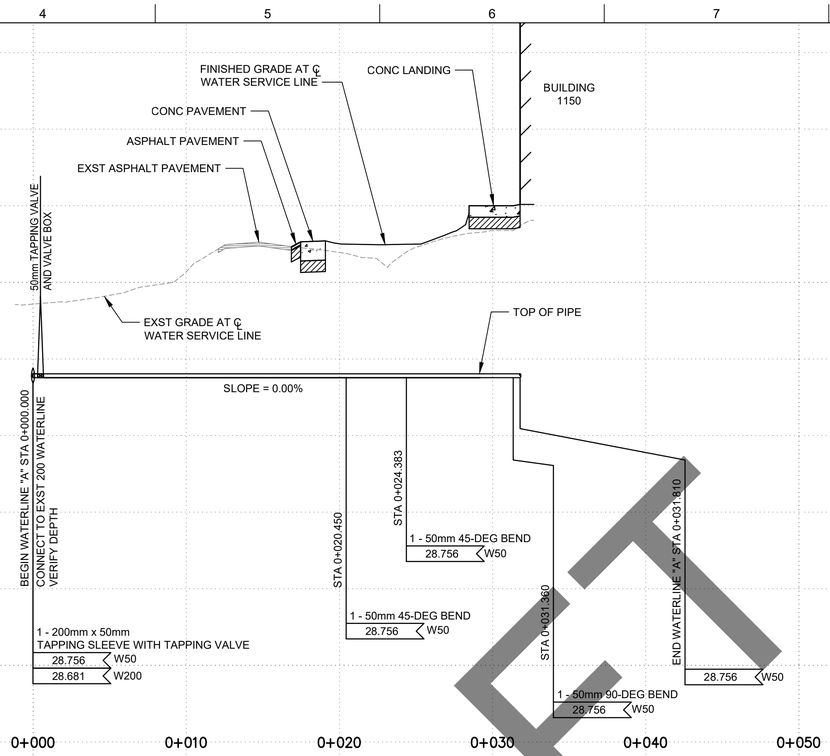

1 WATERLINE PROFILE - WATERLINE "A"

SCALE= HORIZ 1:200
VERT 1:40

0 4 8m
0 0.8 1.6m

NOTES:

1. FOR CONTINUATION OF WL "A" SEE MECHANICAL SHEETS.
2. MINIMUM COVER FOR ALL WATERLINES INSTALLED TO BE 900mm FOR FROST PROTECTION.

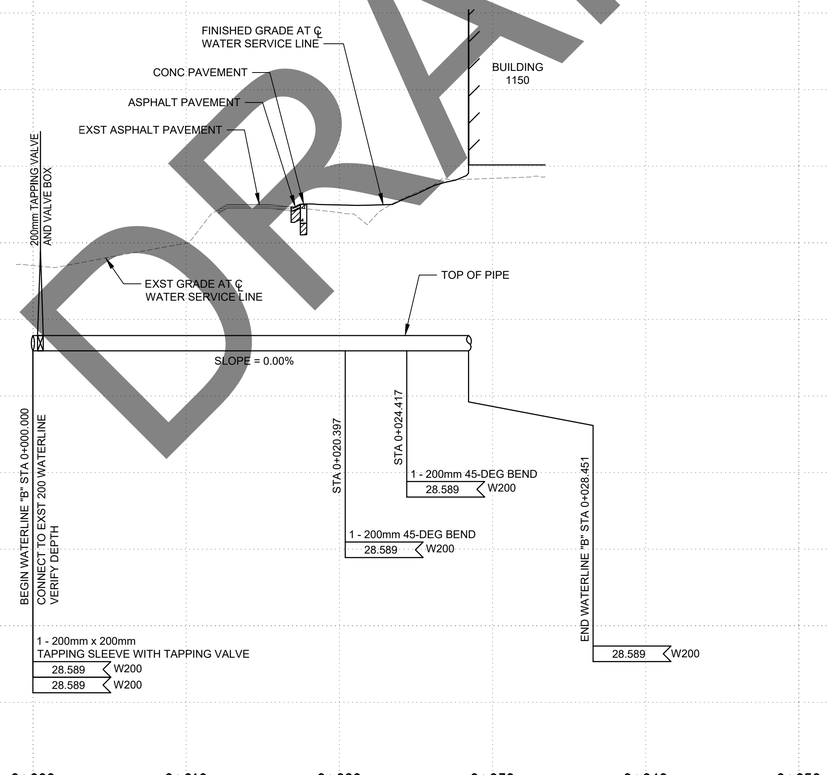

2 WATERLINE PROFILE - WATERLINE "B"

SCALE= HORIZ 1:200
VERT 1:40

0 4 8m
0 0.8 1.6m

NOTES:

1. FOR CONTINUATION OF WL "B" SEE MECHANICAL SHEETS.
2. MINIMUM COVER FOR ALL WATERLINES INSTALLED TO BE 900mm FOR FROST PROTECTION.

DRAFT

US Army Corps of Engineers®

MARK	DESCRIPTION	DATE

DESIGNED BY: M. NISHIMURA
DRAWN BY: C. MILLER
CHECKED BY: T. MCCABE
SUBMITTED BY: F. HINO
SIZE: ISO A1
ISSUE DATE: FEBRUARY 2022
SOLICITATION NO.:
CONTRACT NO.: W912HV-17-D-0007
DRAWING CODE: -
FILE NAME: DESC20UXCU201.dwg

U.S. ARMY CORPS OF ENGINEERS
JAPAN DISTRICT
APO AP 96343-5010

HDR - WTNA JV
1001 BISHOP STREET
SUITE 2400
HONOLULU, HAWAII 96813

MISAWA AIR BASE, JAPAN
DESC 20UX INSTALL ADDITIVE INJECTION SYSTEM

WATERLINE PROFILE 1

SHEET ID
CU201

FILE: DESC20UXCU201.dwg
DATE: 2/22/2021 2:02 PM
OPER: WW*
SCALE: 1:200

IF SHEET IS LESS THAN 594 X 841 MM
REDUCED PRINT = USE GRAPHIC SCALES

RTA SUBMITTAL

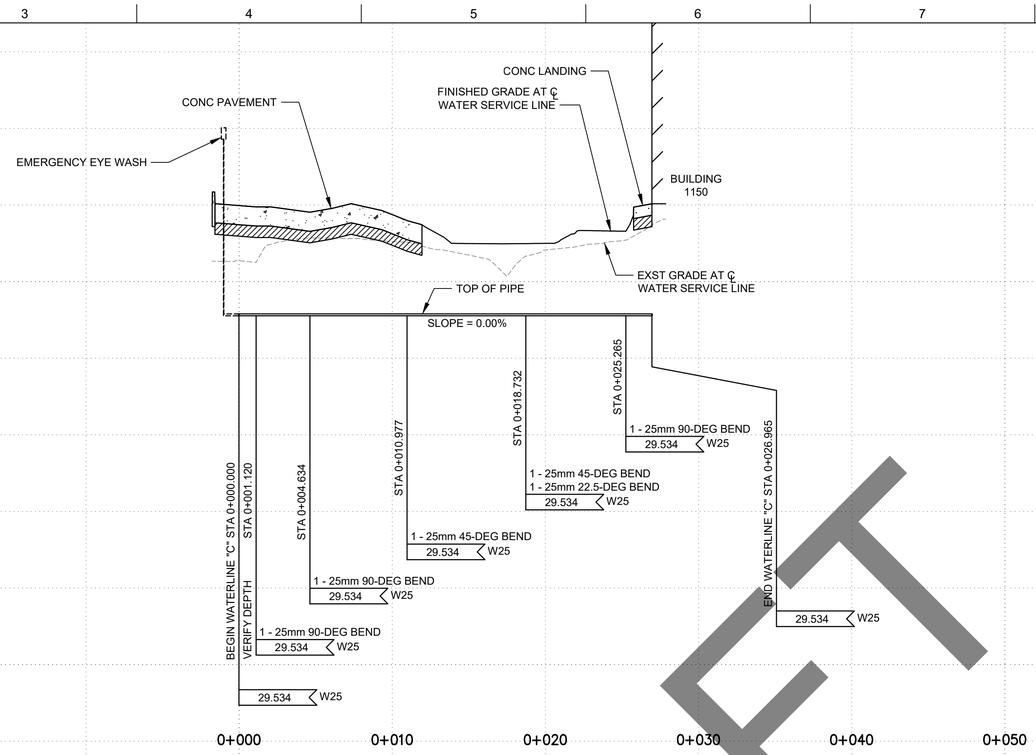

1 WATERLINE PROFILE - WATERLINE "C"

SCALE= HORIZ 1:200
VERT 1:40

0 4 8m
0 0.8 1.6m

NOTES:

1. FOR CONTINUATION OF WL "C" SEE MECHANICAL SHEETS.
2. MINIMUM COVER FOR ALL WATERLINES INSTALLED TO BE 900mm FOR FROST PROTECTION.

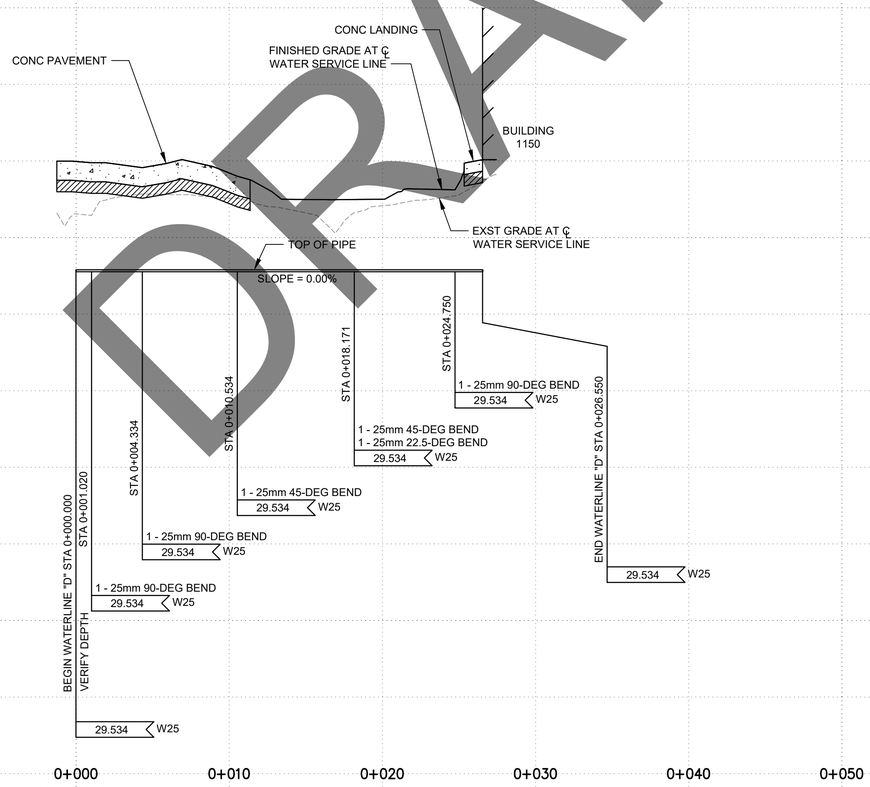

2 WATERLINE PROFILE - WATERLINE "D"

SCALE= HORIZ 1:200
VERT 1:40

0 4 8m
0 0.8 1.6m

NOTES:

1. FOR CONTINUATION OF WL "D" SEE MECHANICAL SHEETS.
2. MINIMUM COVER FOR ALL WATERLINES INSTALLED TO BE 900mm FOR FROST PROTECTION.

DRAFT

US Army Corps of Engineers®

MARK	DESCRIPTION	DATE

DESIGNED BY: M. NISHIMURA
DRAWN BY: W. WU
CHECKED BY: T. MCCABE
SUBMITTED BY: F. HINO
SIZE: ISO A1
ISSUE DATE: FEBRUARY 2022
SOLICITATION NO.:
CONTRACT NO.: W912HV-17-D-0007
DRAWING CODE: -
FILE NAME: DESC20UXCU202.dwg

U.S. ARMY CORPS OF ENGINEERS
APO AP DISTRICT
APO AP 96343-5010

HDR - WTNA JV
1001 BISHOP STREET
SUITE 2400
HONOLULU, HAWAII 96813

MISAWA AIR BASE, JAPAN
DESC 20UX INSTALL ADDITIVE INJECTION SYSTEM

WATERLINE PROFILE 2

SHEET ID
CU202

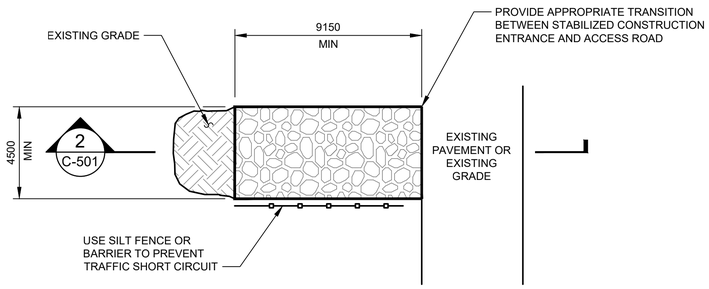

1 STABILIZED CONSTRUCTION ENTRANCE/EXIT
SCALE: 1:150 0 3 6m

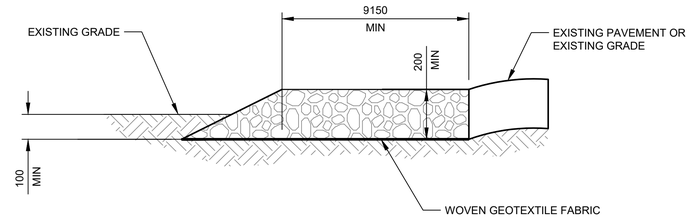

2 STABILIZED CONSTRUCTION ENTRANCE/EXIT SECTION
SCALE: 1:150 0 3 6m

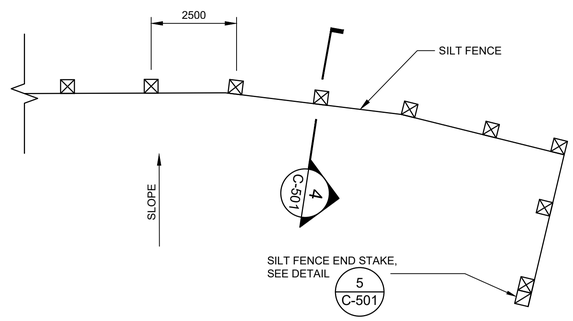

PLAN VIEW

3 SILT FENCE
SCALE: 1:1 0 0.02 0.04m

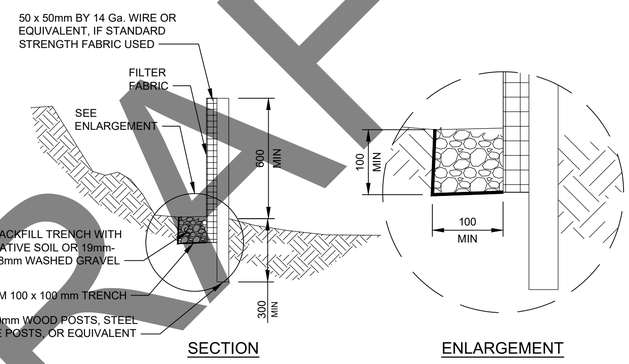

SECTION ENLARGEMENT

4 SILT FENCE SECTION
SCALE: 1:2 0 0.04 0.08m

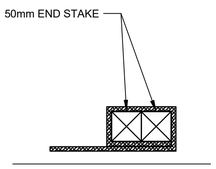

5 SILT FENCE END STAKE
SCALE: 1:30 0 0.6 1.2m

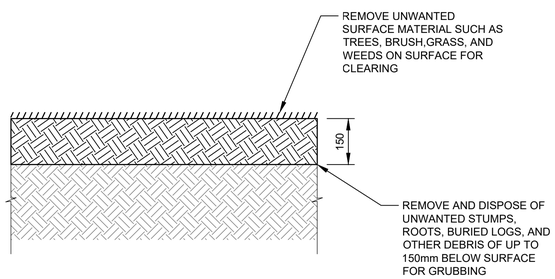

6 CLEARING AND GRUBBING
SCALE: 1:10 0 0.2 0.4m

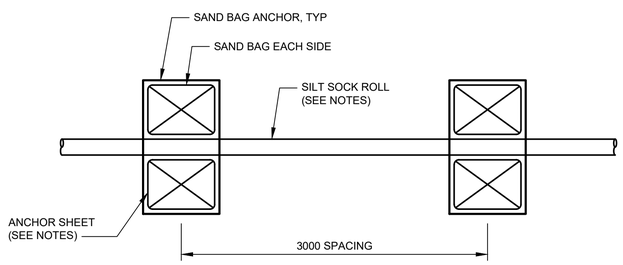

PLAN

NOTES:

1. SILT SOCK ROLL MUST BE POLYPROPYLENE 125mm DIAMETER AS INDICATED ON THE DRAWINGS. ROLLS MUST BE IN 6M LENGTHS UNLESS OTHERWISE ACCEPTED.
2. SANDBAGS MUST BE COMMERCIALLY MANUFACTURED 300mm x 300mm INCH MINIMUM SIZE WOVEN POLYETHYLENE BAGS FILLED WITH A MINIMUM OF 9 KG OF 10mm TO 20mm. CLEAN AGGREGATE, WASHED TO ELIMINATE FINES THAT MAY LEACH FROM THE BAGS.
3. ANCHOR BAGS MUST BE PLACED TO MINIMIZE DISPLACEMENT OF THE ROLLS.
4. ANCHOR SHEETS MUST BE 4mm MINIMUM THICK POLYETHYLENE PLASTIC SHEETING.
5. ANCHOR SHEET MUST BE ROLLED BACK UNDER THE SANDBAG SUCH THAT THE BAG SHALL SECURELY ANCHOR THE SHEET.
6. SAND BAG ANCHORS MUST BE PLACED ACROSS AND OVER THE ROLL AT 3M MAXIMUM INTERVALS AND SUCH THAT THE ROLL WILL NOT BE READILY DISPLACED.

7 COMPOST FILTER SOCK
SCALE: 1:30 0 0.6 1.2m

DRAFT

US Army Corps of Engineers®

MARK	DESCRIPTION	DATE

DESIGNED BY: M. NISHIMURA
DRAWN BY: C. MILLER
CHECKED BY: T. MCCABE
SUBMITTED BY: F. HINO
SIZE: ISO A1
ISSUE DATE: FEBRUARY 2022
SOLICITATION NO.:
CONTRACT NO.: W912HV-17-D-0007
DRAWING CODE: -
FILE NAME: DESC20UXC-501.dwg

U.S. ARMY CORPS OF ENGINEERS
JAPAN DISTRICT
APO AP 96343-5010

HDR - WTNA JV
1001 BISHOP STREET
SUITE 2000
HONOLULU, HAWAII 96813

MISAWA AIR BASE, JAPAN
DESC 20UX INSTALL ADDITIVE INJECTION SYSTEM

CIVIL DETAILS 1

SHEET ID
C-501

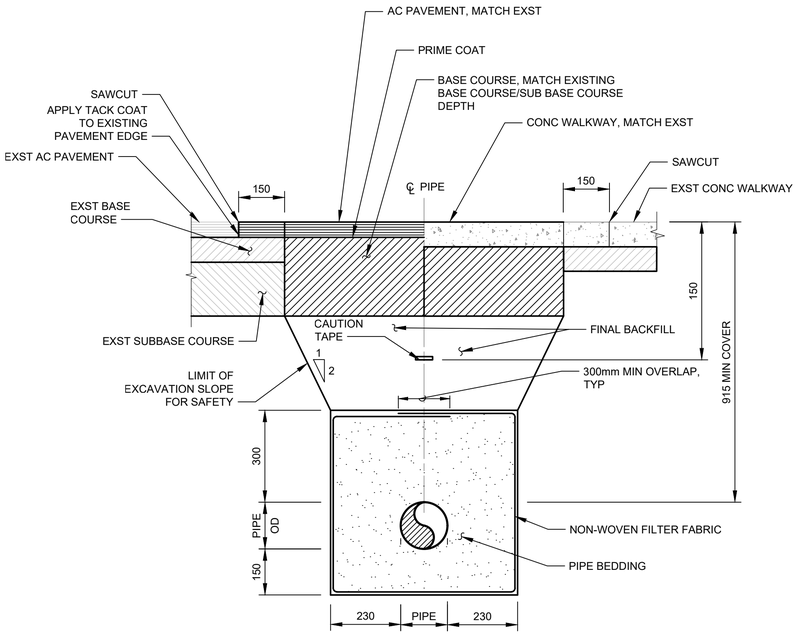

NOTES:

1. PLACE CAUTION TAPE AT 300mm DEPTH IN OUTSIDE PAVED AREAS.
2. UNPAVED AREAS TO CONFIRM TO SAME SUBGRADE REQUIREMENTS. BACKFILL WITH BASE COURSE 150mm BELOW GRADE TO SURFACE.
3. ALL BACKFILL UP TO 770mm FROM SURFACE SHALL BE WITH NON FROST-SUSCEPTIBLE MATERIAL.

1 UTILITY TRENCH - AC PAVEMENT OR SIDEWALK CONDITION

SCALE: 1:10

0 0.2 0.4m

MINIMUM BEARING FACE AREA (SM)		
PIPE SIZE	FITTING	AREA
300mm x 200mm	TEE	0.259
200mm	90-DEG BEND	0.508
200mm	45-DEG BEND	0.275

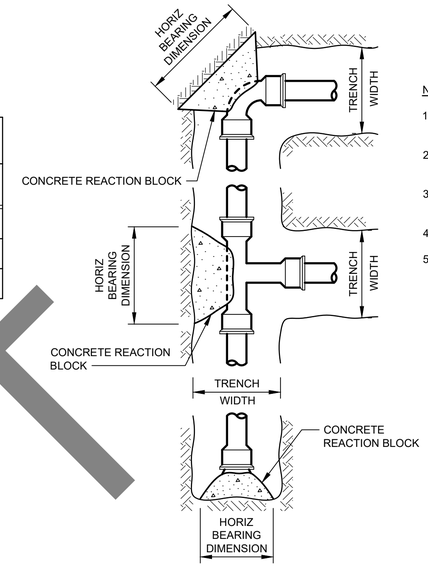

PLAN

NOTES:

1. CONCRETE REACTION BLOCKS MUST BE INSTALLED AT ALL TEES AND BENDS.
2. CONCRETE MUST BE 18 MPA AND MUST BE POURED AGAINST UNDISTURBED EARTH.
3. MINIMUM AREAS ARE BASED ON A LATERAL BEARING OF 70 kPa.
4. FACTOR OF SAFETY = 1.25 MIN.
5. TEST PRESSURE = 200 kPa.

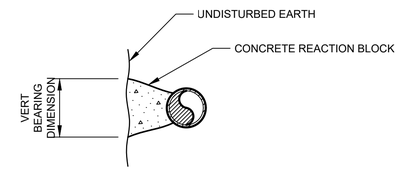

TYPICAL SECTION

2 CONCRETE REACTION BLOCK

SCALE: 1:5

0 0.1 0.2m

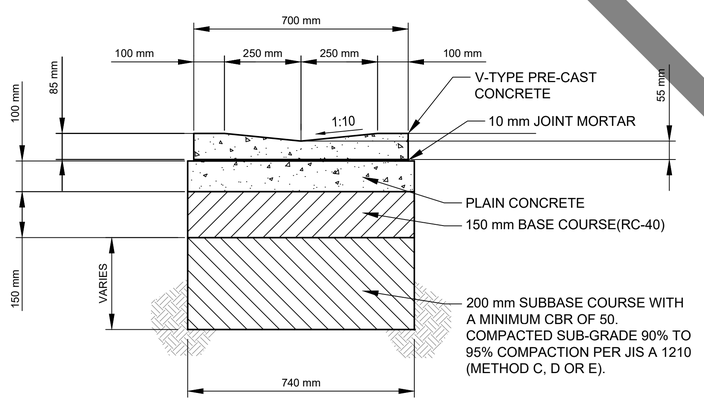

3 CONCRETE SWALE TRENCH

SCALE: 1:10

0 0.2 0.4m

DRAFT

US Army Corps of Engineers ©

MARK	DESCRIPTION	DATE

DESIGNED BY: M. NISHIMURA
DRAWN BY: C. MILLER
CHECKED BY: T. MCCABE
SUBMITTED BY: F. HINO
SIZE: ISO A1
ISSUE DATE: FEBRUARY 2022
SOLICITATION NO.:
CONTRACT NO.: W912HV-17-D-0007
DRAWING CODE: -
FILE NAME: DESC20UXC-502.dwg

U.S. ARMY CORPS OF ENGINEERS
JAPAN DISTRICT
APO AP 96343-5010

HDR - WTNA JV
1001 BISHOP STREET
SUITE 2000
HONOLULU, HAWAII 96813

MISAWA AIR BASE, JAPAN
DESC 20UX INSTALL ADDITIVE INJECTION SYSTEM

CIVIL DETAILS 2

SHEET ID

C-502

FILE: DESC20UXC-502.dwg
DATE: 1/6/2022 6:34 PM
OPER: WW*
SCALE:

IF SHEET IS LESS THAN 594 X 841 MM
REDUCED PRINT = USE GRAPHIC SCALES

RTA SUBMITTAL

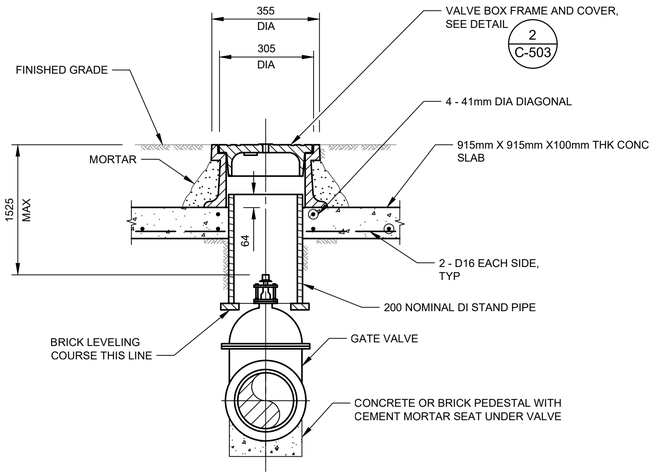

1 GATE VALVE BOX DETAIL
SCALE: 1:10

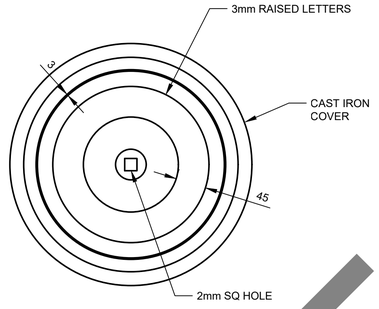

TOP PLAN

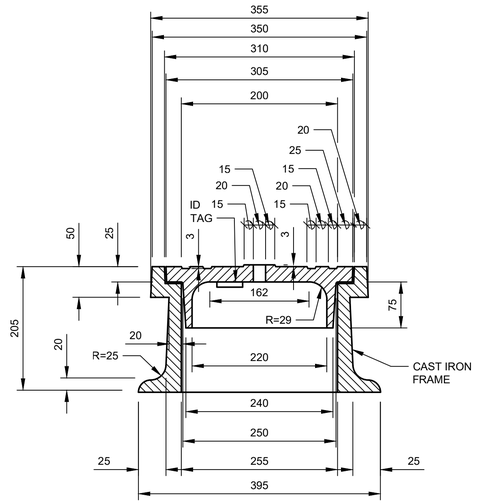

ELEVATION

NOTES:

1. ALL CASTINGS SHALL BE MADE ACCURATELY TO THE DIMENSIONS SHOWN. SEAT AND COVER SHALL BE MACHINED, NOT GROUND TO SECURE FLAT AND TRUE SURFACES. THE COVER SHALL NOT RATTLE IN ANY POSITION.

2 VALVE BOX FRAME AND COVER
SCALE: 1:5

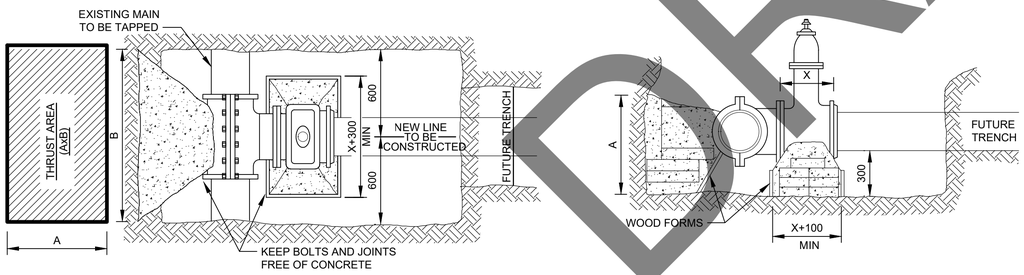

PLAN

ELEVATION

NOTES:

1. PLACE TAPPING SLEEVE A MINIMUM OF 500mm FROM ANY BELL COUPLING, VALVE, FITTING OR OTHER OBSTRUCTION.
2. EXCAVATE AS SHOWN AND SET TAPPING SLEEVE AND VALVE AND TIGHTEN ALL BOLTS PRIOR TO THE PRESSURE TEST. ALL TAPPING SLEEVES AND VALVES MUST BE PRESSURE TESTED PRIOR TO BLOCKING OR TAPPING. THE TEST MUST BE WITNESSED AND APPROVED BY THE INSPECTOR.
3. BLOCKS ARE TO EXTEND TO UNDISTRIBUTED GROUND AND BE INSTALLED BEFORE THE TAP IS MADE. ALL FLANGE BOLTS MUST B FREE AND CLEAR OF CONCRETE.
4. THIS DETAIL COVERS TAPPING SLEEVES 100mm THROUGH 400mm IN SIZE ON DUCTILE IRON, CAST IRON AND ASBESTOS CEMENT PIPE. ANY OTHER SIZE OR TYPE OF PIPE WILL REQUIRE A SEPARATE SUBMITTAL AND APPROVAL BY THE CONTRACTING OFFICER.
5. PROVIDE ALL MATERIALS, APPURTENANCES, AND WORK FOR TEMPORARY BLOCKING FOR PRESSURE TESTING AND DISINFECTION BEFORE FINAL CONNECTION.

SIZE OF PIPE BEING CONNECTED (mm)	MINIMUM THRUST AREA REQUIRED EQUALS (AxB) (SQUARE METER
100 AND LESS	0.3
200	0.6

3 TAPPING SLEEVE AND VALVES
SCALE: 1:1

DRAFT

US Army Corps of Engineers®

MARK	DESCRIPTION	DATE

DESIGNED BY: M. NISHIMURA
DRAWN BY: C. MILLER
CHECKED BY: T. MCCABE
SUBMITTED BY: F. HINO
SIZE: ISO A1
ISSUE DATE: FEBRUARY 2022
SOLICITATION NO.: -
CONTRACT NO.: W912HV-17-D-0007
DRAWING CODE: -
FILE NAME: DESC20UXC-503.dwg

U.S. ARMY CORPS OF ENGINEERS
JAPAN DISTRICT
APO AP 96343-5010

HDR - WTNA JV
1001 BISHOP STREET
SUITE 2400
HONOLULU, HAWAII 96813

MISAWA AIR BASE, JAPAN
DESC 20UX INSTALL ADDITIVE INJECTION SYSTEM

CIVIL DETAILS 3

SHEET ID
C-503

FILE: DESC20UXC-503.dwg
DATE: 2/14/2021 8:12 PM
OPER: WW*
SCALE:

IF SHEET IS LESS THAN 594 X 841 MM
REDUCED PRINT = USE GRAPHIC SCALES

RTA SUBMITTAL

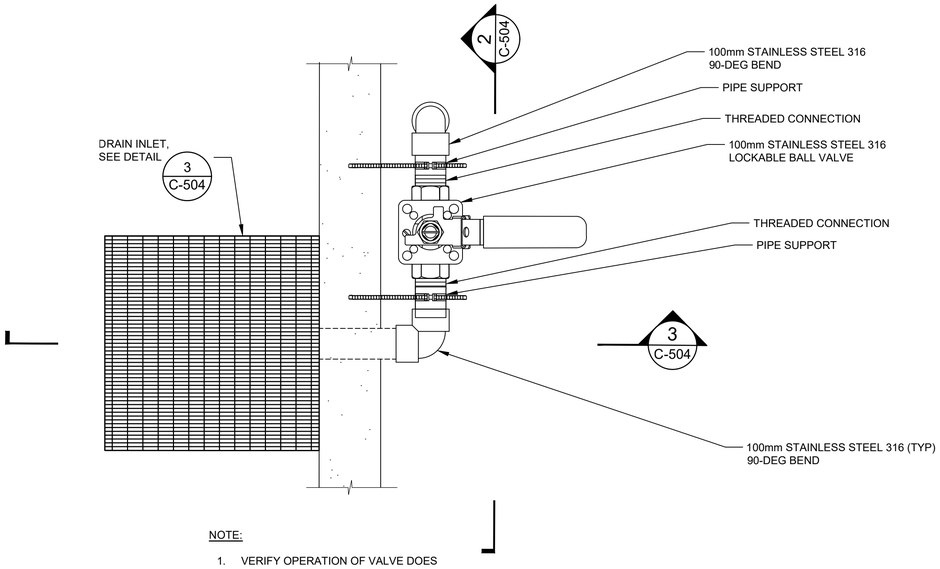

NOTE:

1. VERIFY OPERATION OF VALVE DOES NOT CONFLICT WITH PIPE SUPPORT.
2. BALL VALVE TO BE STAINLESS STEEL 316

1 TRUCK OFFLOAD PAD DRAIN INLET PLAN

SCALE: 1:10 (0 0.2 0.4m)

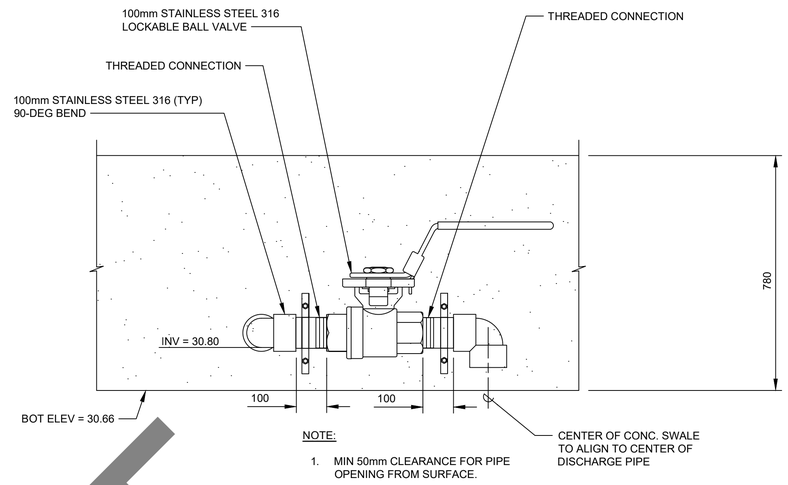

NOTE:

1. MIN 50mm CLEARANCE FOR PIPE OPENING FROM SURFACE.

2 TRUCK OFFLOAD PAD DRAIN INLET SECTION

SCALE: 1:10 (0 0.2 0.4m)

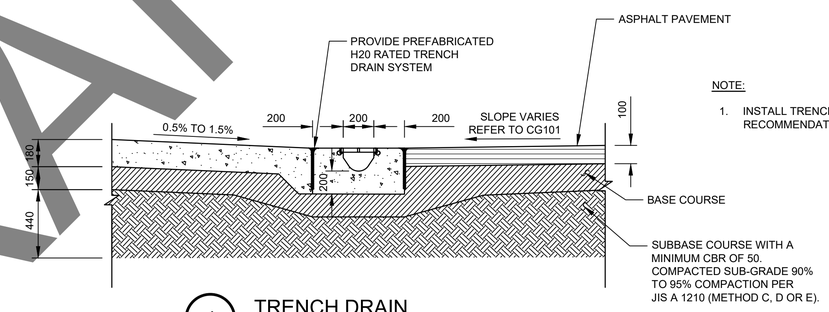

NOTE:

1. INSTALL TRENCH DRAIN SYSTEM PER MANUFACTURERS RECOMMENDATIONS.

4 TRENCH DRAIN

SCALE: 1:20 (0 0.4 0.8m)

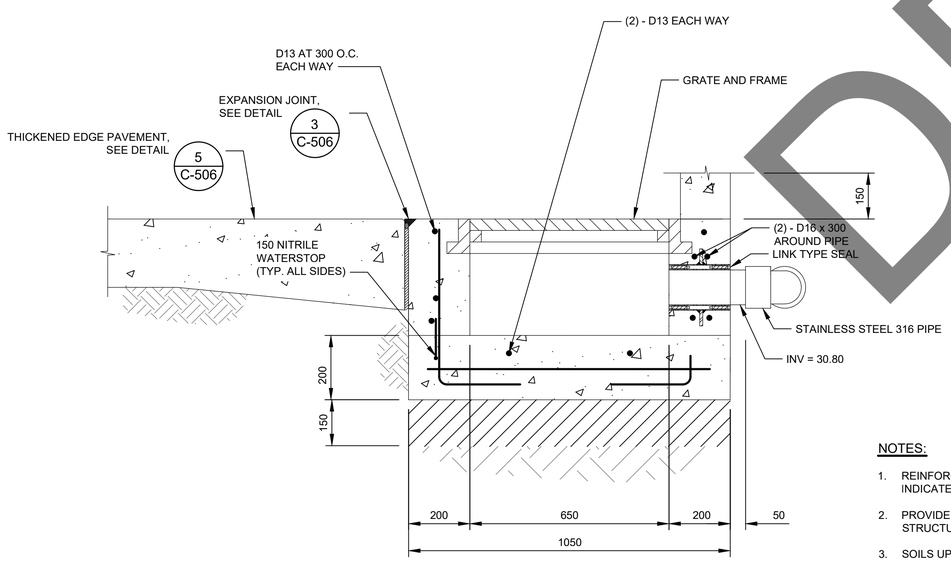

NOTES:

1. REINFORCED CONCRETE TO FOLLOW CRITERIA INDICATED ON STRUCTURE SHEET S-001
2. PROVIDE 150mm BASE COURSE BELOW DRAIN INLET STRUCTURE.
3. SOILS UP TO 770mm BELOW SURFACE SHALL BE BACKFILLED WITH NON FROST SUSCEPTIBLE MATERIAL.
4. BOLTS FOR LINK TYPE SEAL SHALL BE STAINLESS STEEL 316.

3 TRUCK OFFLOAD PAD CAST-IN-PLACE DRAIN INLET

SCALE: 1:10 (0 0.2 0.4m)

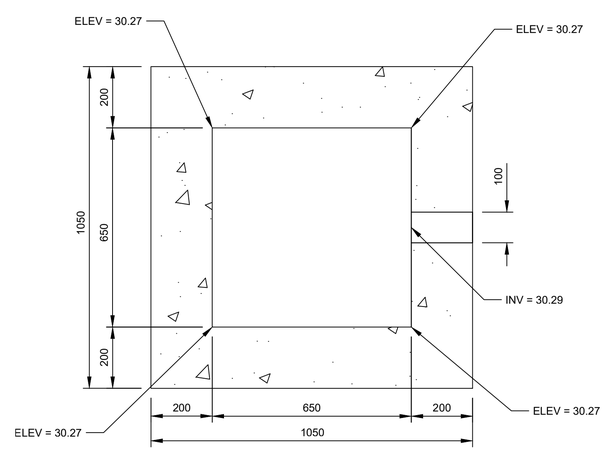

5 DRAIN INLET PLAN

SCALE: 1:10 (0 0.2 0.4m)

DRAFT

US Army Corps of Engineers®

MARK	DESCRIPTION	DATE

DESIGNED BY: M. NISHIMURA
DRAWN BY: C. MILLER
CHECKED BY: T. MCCABE
SUBMITTED BY: F. HINO
SIZE: ISO A1
ISSUE DATE: FEBRUARY 2022
SOLICITATION NO.: -
CONTRACT NO.: W912HV-17-D-0007
DRAWING CODE: -
FILE NAME: DESC20UXC-504.dwg

U.S. ARMY CORPS OF ENGINEERS
JAPAN DISTRICT
APO AP 96343-5010

HDR - WTNA JV
1001 BISHOP STREET
SUITE 1000
HONOLULU, HAWAII 96813

MISAWA AIR BASE, JAPAN
DESC 20UX INSTALL ADDITIVE INJECTION SYSTEM

CIVIL DETAILS 4

SHEET ID
C-504

FILE: DESC20UXC-504.dwg
DATE: 2/2/2022 5:40 PM
OPER: WW*
SCALE:

IF SHEET IS LESS THAN 594 X 841 MM
REDUCED PRINT = USE GRAPHIC SCALES

RTA SUBMITTAL

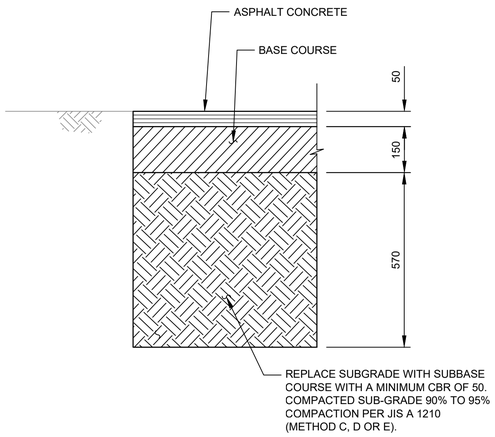

1 ASPHALT CONCRETE PAVEMENT

SCALE: 1:10

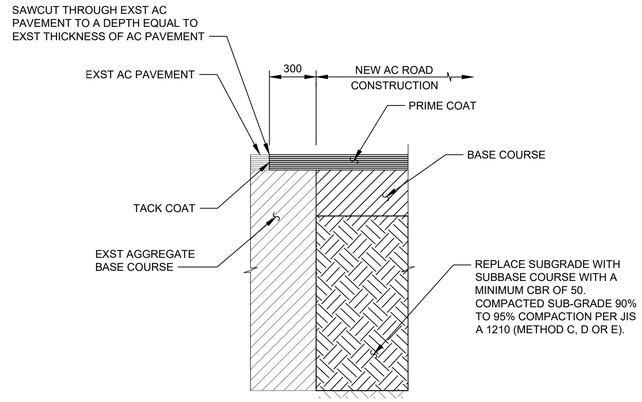

2 SMOOTH RIDING CONNECTION TO EXISTING PAVEMENT

SCALE: 1:10

NOTES:

1. REINFORCED CONCRETE TO FOLLOW CRITERIA INDICATED ON STRUCTURE SHEET S-001

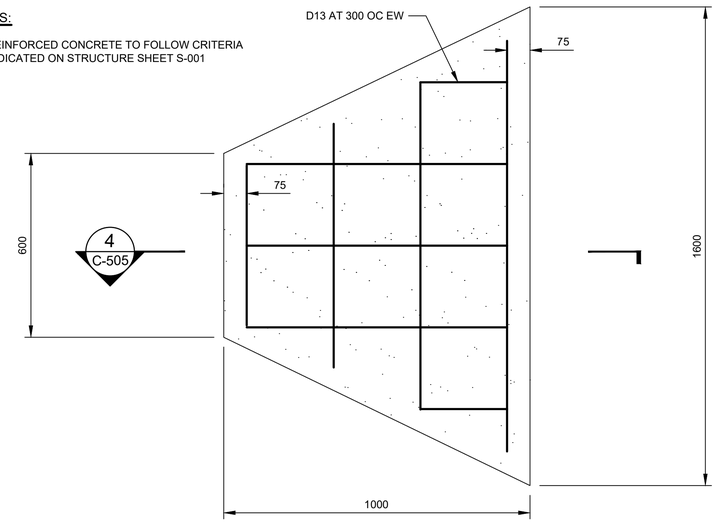

3 CONCRETE APRON PLAN

SCALE: 1:10

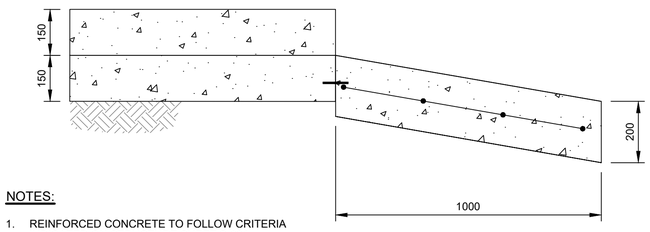

NOTES:

1. REINFORCED CONCRETE TO FOLLOW CRITERIA INDICATED ON STRUCTURE SHEET S-001

4 CONCRETE APRON SECTION

SCALE: 1:10

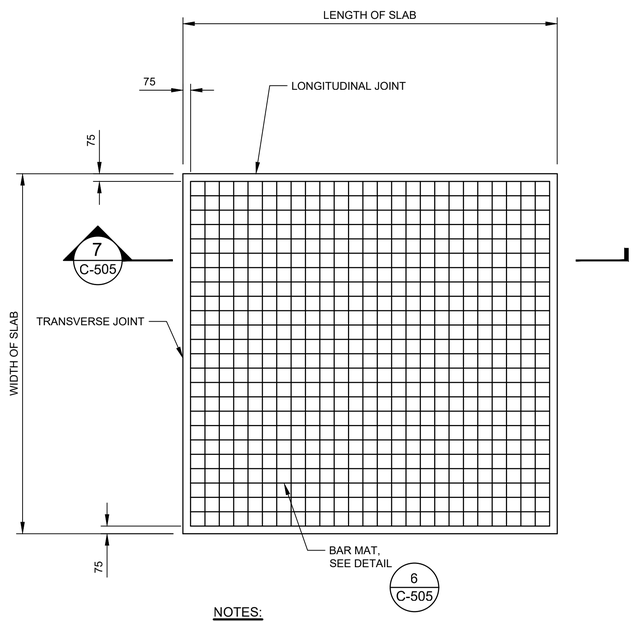

NOTES:

1. ALL LAPS MUST BE SECURELY WIRED TO PREVENT SEPARATION DURING CONCRETE PLACEMENT.
2. BAR LAP SPLICES MUST BE 24 BAR DIAMETERS.
3. SOME JOINTS MAY BE DOWELED NOT SHOWN TO INCREASE CLARITY.
4. REINFORCED CONCRETE TO FOLLOW CRITERIA INDICATED ON STRUCTURE SHEET S-001

5 SLAB REINFORCEMENT

SCALE: 1:30

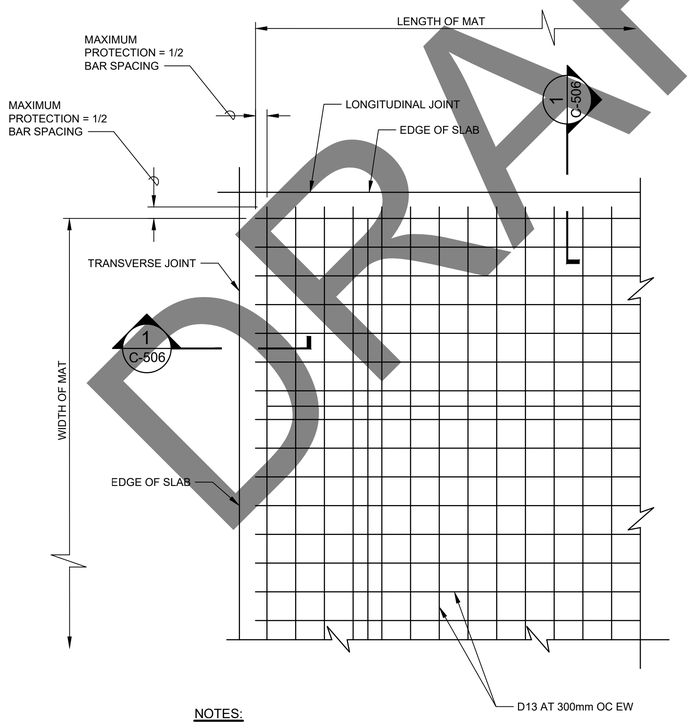

NOTES:

1. REINFORCED CONCRETE TO FOLLOW CRITERIA INDICATED ON STRUCTURE SHEET S-001

6 BAR MAT

SCALE: 1:30

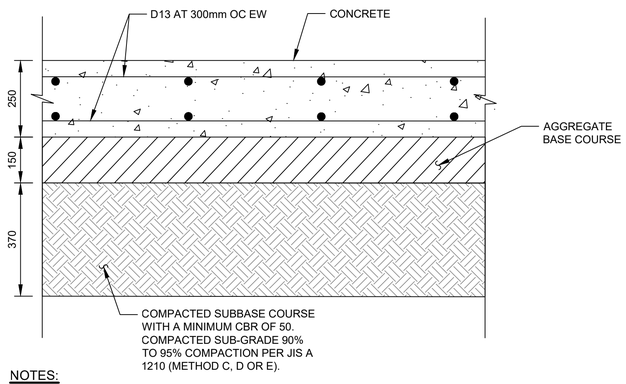

NOTES:

1. REINFORCED CONCRETE TO FOLLOW CRITERIA INDICATED ON STRUCTURE SHEET S-001

7 TRUCK OFFLOAD PAD REINFORCEMENT

SCALE: 1:10

DRAFT

US Army Corps of Engineers®

MARK	DESCRIPTION	DATE

DESIGNED BY: M. NISHIMURA
DRAWN BY: C. MIU
CHECKED BY: T. MCCABE
SUBMITTED BY: F. HINO
SIZE: ISO A1
ISSUE DATE: FEBRUARY 2022
SOLICITATION NO.:
CONTRACT NO.: W912HV-17-D-0007
DRAWING CODE: -
FILE NAME: DESC20UXC-505.dwg

U.S. ARMY CORPS OF ENGINEERS
JAPAN DISTRICT
APO AP 96343-5010

HDR - WTNA JV
1001 BISHOP STREET
SUITE 1000
HONOLULU, HAWAII 96813

MISAWA AIR BASE, JAPAN
DESC 20UX INSTALL ADDITIVE INJECTION SYSTEM

CIVIL DETAILS 5

SHEET ID
C-505

FILE: DESC20UXC-505.dwg
DATE: 2/16/2022 4:10 PM
OPER: WW*
SCALE:

IF SHEET IS LESS THAN 594 X 841 MM
REDUCED PRINT = USE GRAPHIC SCALES

RTA SUBMITTAL

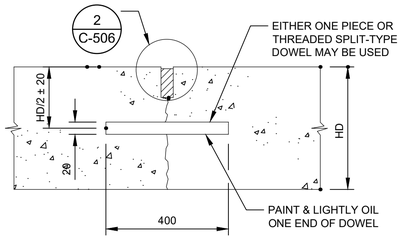

NOTES:

1. DOWELS PLACED AT 300mm O.C.

1 CONTROL JOINT

SCALE: 1:10 (0 0.2 0.4m)

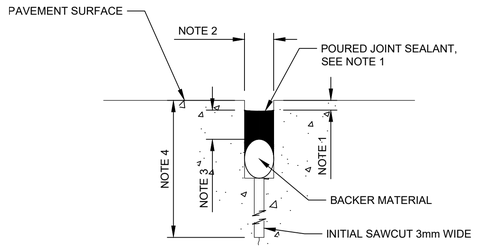

NOTES:

1. TOP OF SEALANT MUST BE 6mm ± 1.5mm BELOW TOP OF PAVEMENT.
2. WIDTH OF SEALANT MUST BE 13 TO 16mm.
3. DEPTH OF SEALANT MUST BE PER MANUFACTURERS INSTRUCTIONS.
4. DEPTH OF SAWCUT MUST BE 1/4 OF SLAB THICKNESS.

2 CONTROL JOINT SEALANT

SCALE: 1:10 (0 0.2 0.4m)

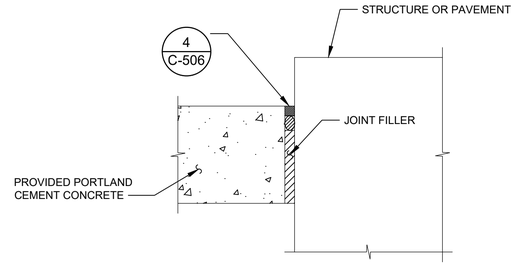

3 EXPANSION JOINT

SCALE: 1:10 (0 0.2 0.4m)

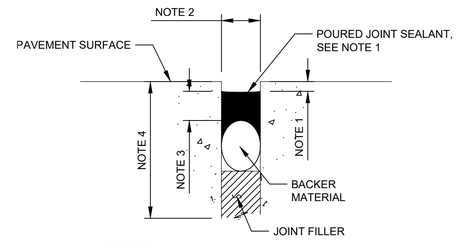

NOTES:

1. TOP OF SEALANT MUST BE 6mm ± 1.5mm BELOW TOP OF PAVEMENT.
2. WIDTH OF SEALANT MUST BE 13 TO 16mm.
3. DEPTH OF SEALANT MUST BE PER MANUFACTURERS INSTRUCTIONS.
4. DEPTH OF SAWCUT MUST BE 1/4 OF SLAB THICKNESS.

4 EXPANSION JOINT SEALANT

SCALE: 1:10 (0 0.2 0.4m)

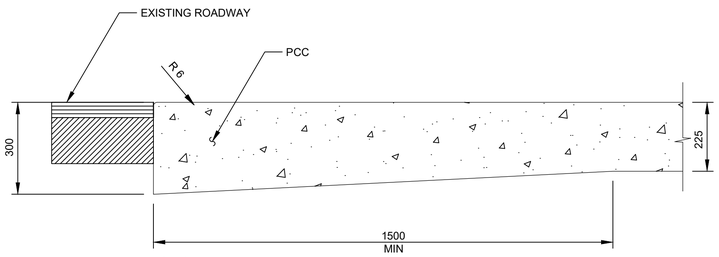

NOTES:

1. REINFORCEMENT NOT SHOWN

5 THICKENED EDGE PAVEMENT DETAIL

SCALE: 1:10 (0 0.2 0.4m)

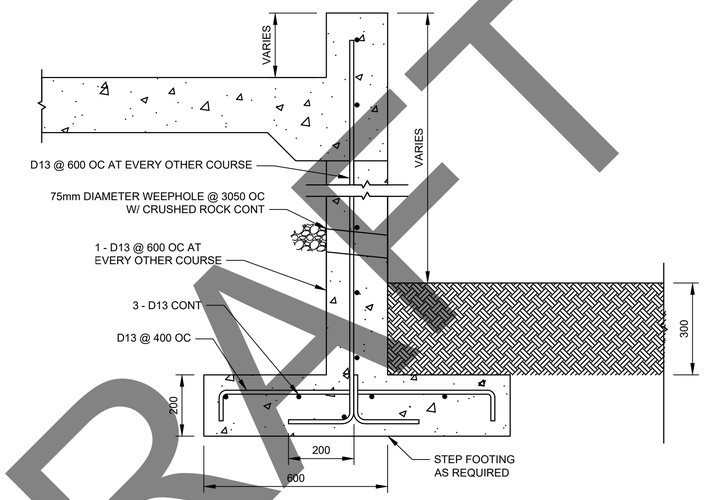

NOTES:

1. REINFORCED CONCRETE TO FOLLOW CRITERIA INDICATED ON STRUCTURE SHEET S-001
2. ALL CAST IN PLACE CONCRETE SHALL HAVE A MINIMUM 28 DAY COMPRESSIVE STRENGTH OF 36 MPa.

6 GRADE ADJUSTMENT WALL - TRUCK OFFLOADING PAD

SCALE: 1:10 (0 0.2 0.4m)

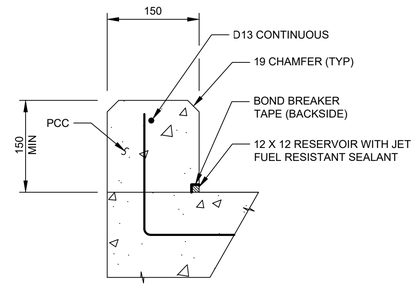

NOTES:

1. INCLUDE 150 NITRILE WATERSTOP IN CURB TO SLAB JOINT UNLESS CAST MONOLITHICALLY.

7 CONCRETE CURB

SCALE: 1:5 (0 0.1 0.2m)

NOTES:

1. REINFORCED CONCRETE TO FOLLOW CRITERIA INDICATED ON STRUCTURE SHEET S-001

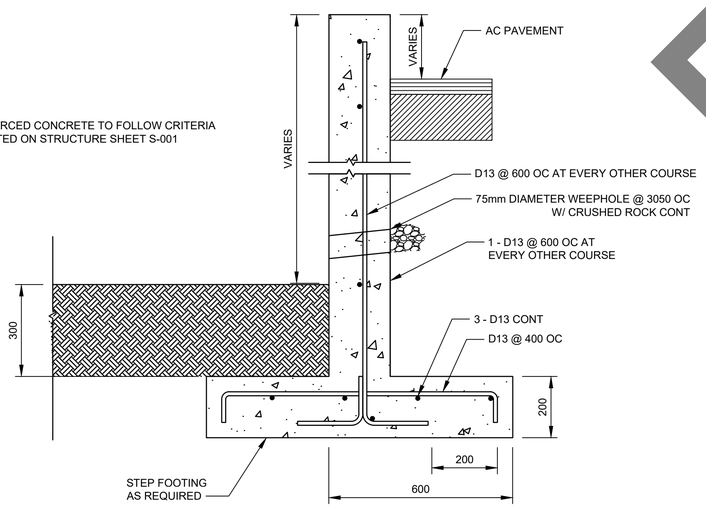

6 GRADE ADJUSTMENT WALL - ROADWAY

SCALE: 1:10 (0 0.2 0.4m)

DRAFT

US Army Corps of Engineers®

MARK	DESCRIPTION	DATE

DESIGNED BY: M. NISHIMURA
DRAWN BY: C. MIU
CHECKED BY: T. MCCABE
SUBMITTED BY: F. HINO
SIZE: ISO A1
ISSUE DATE: FEBRUARY 2022
SOLICITATION NO.:
CONTRACT NO.: W912HV-17-D-0007
DRAWING CODE: -
FILE NAME: DESC20UXC-506.dwg

U.S. ARMY CORPS OF ENGINEERS
JAPAN DISTRICT
APO AP 96343-5010

HDR - WTNA JV
1001 BISHOP STREET
SUITE 2400
HONOLULU, HAWAII 96813

MISAWA AIR BASE, JAPAN
DESC 20UX INSTALL ADDITIVE INJECTION SYSTEM

CIVIL DETAILS 6

SHEET ID
C-506

GENERAL NOTES

1. ALL INSTALLATION AND NEW WORK FOR THIS PROJECT SHALL BE IN ACCORDANCE WITH THE CONTRACT DRAWINGS AND SPECIFICATIONS UNLESS DISCREPANCIES ARE DISCOVERED AND MODIFIED UNDER NOTES ABOVE IN THE STATEMENT OF WORK.
2. THE CONTRACTOR SHALL VISIT THE PROJECT SITES INDICATED IN THE DRAWINGS, VERIFY EXISTING SITE CONDITIONS, AND ALL DIMENSIONS AND QUANTITIES RELATED TO THE PROJECT PRIOR TO COMMENCEMENT OF WORK AND NOTIFY THE CONTRACTING OFFICER OF ANY DISCREPANCIES. THE CONTRACTOR, UPON COMPLETION OF ALL WORK IN EACH AREA OF THE PROJECT SHALL LEAVE THE AREA CLEAN AND COMPLETE TO THE SATISFACTION OF THE CONTRACTING OFFICER.
3. ALL EXISITNG AREAS OUTSIDE, ABUTTING OR ADJACENT TO THE VARIOUS WORK AREAS THAT ARE DAMAGED OR DISTURBED DURING CONSTRUCTION SHALL BE RESTORED BY THE CONTRACTOR TO THE ORIGINAL CONDITION AS DIRECTED BY THE CONTRACTING OFFICER AT NO ADDITIONAL COST TO THE U.S. GOVERNMENT.
4. WHEN CONNECTIONS OF NEW UTILITY LINES TO THE EXISTING SYSTEMS WILL CAUSE AN INTERRUPTION OF SERVICE, THE CONTRACTOR SHALL SUBMIT A REQUEST FOR UTILITY OUTAGE, DISRUPTION TO TRAFFIC FLOW, EXCAVATION PERMIT AND GOVERNMENT SHOP ASSISTANCE WITH THE CONTRACTING OFFICER 14 DAYS IN ADVANCE FOR APPROVAL AND SHALL ATTACH DRAWING OR MAP SHOWING THE AFFECTED AREAS AND REASON FOR REQUEST. AF FORM 103 SHALL BE SUBMITTED BY THE CONTRACTOR FOR PERMIT, PROCEDURES FOR APPLICATION SHALL BE DISCUSSED WITH THE CONTRACTING OFFICER.
5. ALL MATERIALS REQUIRED TO BE DISPOSED OF IN THIS PROJECT UNLESS REQUESTED TO BE SALVAGED BY THE CONTRACTING OFFICER, BECOME THE PROPERTY OF THE CONTRACTOR AND SHALL BE DISPOSED OF OFF ALL U.S. GOVERNMENT CONTROLLED PROPERTY IN ACCORDANCE WITH ALL LOCAL GOVERNING LAWS AND REGULATIONS.
6. THE CONTRACTOR SHALL AVOID INTERRUPTIONS OF UTILITIES TO EXISTING BUILDINGS NOT PART OF THE SCOPE OF WORK.
7. REFER TO SPECIFICATIONS FOR TESTING, REMOVAL AND DISPOSAL PROCEDURES REGARDING ENVIRONMENTAL WORK, INCLUDING FUNGUS/MOLD REMOVAL WORK.

ABBREVIATIONS

@	AT
Ø	ROUND
℄	CENTERLINE
A	ARCHTECTURAL
AC	ASPHALT CONCRETE
A/C	AIR CONDITION
ACCU	AIR CONDITION CONDENSING UNIT
ACST	ACOUSTICAL CEILING
AFF	ABOVE FLOOR FINISH
AL, ALUM	ALUMINUM
ARCH	ARCHITECTURAL
B1150	BUILDING 1150
BD	BOARD
BLDG	BUILDING
BTW	BETWEEN
CLG	CEILING
CLR	CLEAR
CMU	CONCRETE MASONRY UNIT
COL	COLUMN
CONC	CONCRETE
CONT	CONTINUOUS
COOR	COORDINATE
CORR	CORRUGATED, CORRUGATION
CJ	CONTROL JOINT
D, (D)	DEEP, DEPTH
DBL	DOUBLE
DET	DETAIL
DIA	DIAMETER
DN	DOWN
DR	DOOR
DS	DOWNSPOUT
DWG	DRAWINGS
EA	EACH
EF	EXHAUST FAN
ELEC	ELECTRICAL
ELEV	ELEVATION
EPDM	ETHYLENE PROPYLENE DIENE MONOMER RUBBER
EQUIP	EQUIPMENT
EW/ES	EYE WASH / EMERGENCY SHOWER
EXIST, (E)	EXISTING
EXT	EXTERIOR
FD	FLOOR DRAIN
FFE	FINISH FLOOR ELEVATION
FIN	FINISH
FLR	FLOOR
FLR'G	FLOORING
FRAM	FRAMING
GALV	GALVANIZED
GYP	GYPSUM
GYPBD	GYPSUM BOARD
HARDNR	HARDENER
H, HT	HEIGHT
HP	HIGH POINT
HVAC	HEATING VENTING & AIR CONDITIONING
INSUL	INSULATION
INT	INTERIOR
kg	KILOGRAM
(L)	LONG
L	L-CHANNEL
m	METER
mm	MILLIMETER
MAX	MAXIMUM
MECH	MECHANICAL
MIN	MINIMUM
MIR	MIRROR
MOD BIT	MODIFIED BITUMEN
MTD	MOUNTED
MTL	METAL
NO., #	NUMBER
OC	ON CENTER
PT-___	PAINT COLOR
PTD	PAINTED
PVC	POLYVINYL CHLORIDE PIPE
PVMT	PAVEMENT
QTY	QUANTITY
RCP	REFLECTED CEILING PLAN
REV	REVERSED
RF	ROOFING
RM	ROOM
SCHED	SCHEDULE
SECT	SECTION
SHT	SHEET
SIM	SIMILAR
SL	SLOPE
SQ	SQUARE
SS, S. STEEL	STAINLESS STEEL
STL	STEEL
STRUCT	STRUCTURAL
TERM	TERMINATION
THCK, THK	THICK
TYP, (TYP)	TYPICAL
VCT	VINYL COMPOSITION TILE
VTR	VENT THRU ROOF
W, (W)	WIDE, WIDTH
W/	WITH
WC	WATER CLOSET
WH	WATER HEATER

SYMBOLS

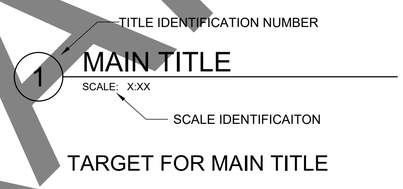

TARGET FOR MAIN TITLE

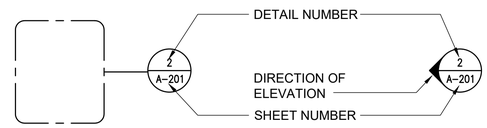

TARGET FOR ENLARGED PLANS / DETAILS

TARGET FOR ELEVATION

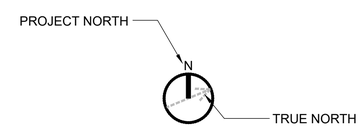

NORTH ARROW

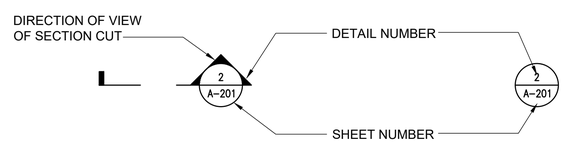

TARGET FOR SECTION

TARGET FOR DETAIL

SCALE BAR

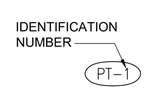

PAINT TAG

DOOR SYMBOL

LOUVER SYMBOL

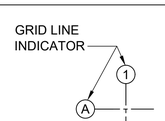

GRID LINES

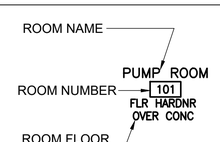

ROOM TAG

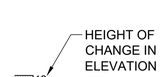

THRESHOLD/CHANGE IN FLOOR FINISH

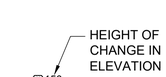

CURB IN FLOOR FINISH

DRAFT

US Army Corps of Engineers®

MARK	DESCRIPTION	DATE

DESIGNED BY: S. ANTOLIN
DRAWN BY: S. ANTOLIN
CHECKED BY: W. NAKAMURA
SUBMITTED BY: W. NAKAMURA
SIZE:
ISSUE DATE: FEBRUARY 2022
SOLICITATION NO.:
CONTRACT NO.: W912HV-17-D-0007
DRAWING CODE: =
FILE NAME: DESSC20UX-A-001.dwg

U.S. ARMY CORPS OF ENGINEERS
JAPAN DISTRICT
APO AP 96343-5010

HDR - WTNA JV
1001 BISHOP STREET
SUITE 400
HONOLULU, HAWAII 96813

MISAWA AIR BASE, JAPAN
DESC 20UX INSTALL ADDITIVE INJECTION SYSTEM

ARCHITECTURAL GENERAL NOTES AND ABBREVIATIONS

SHEET ID
A-001

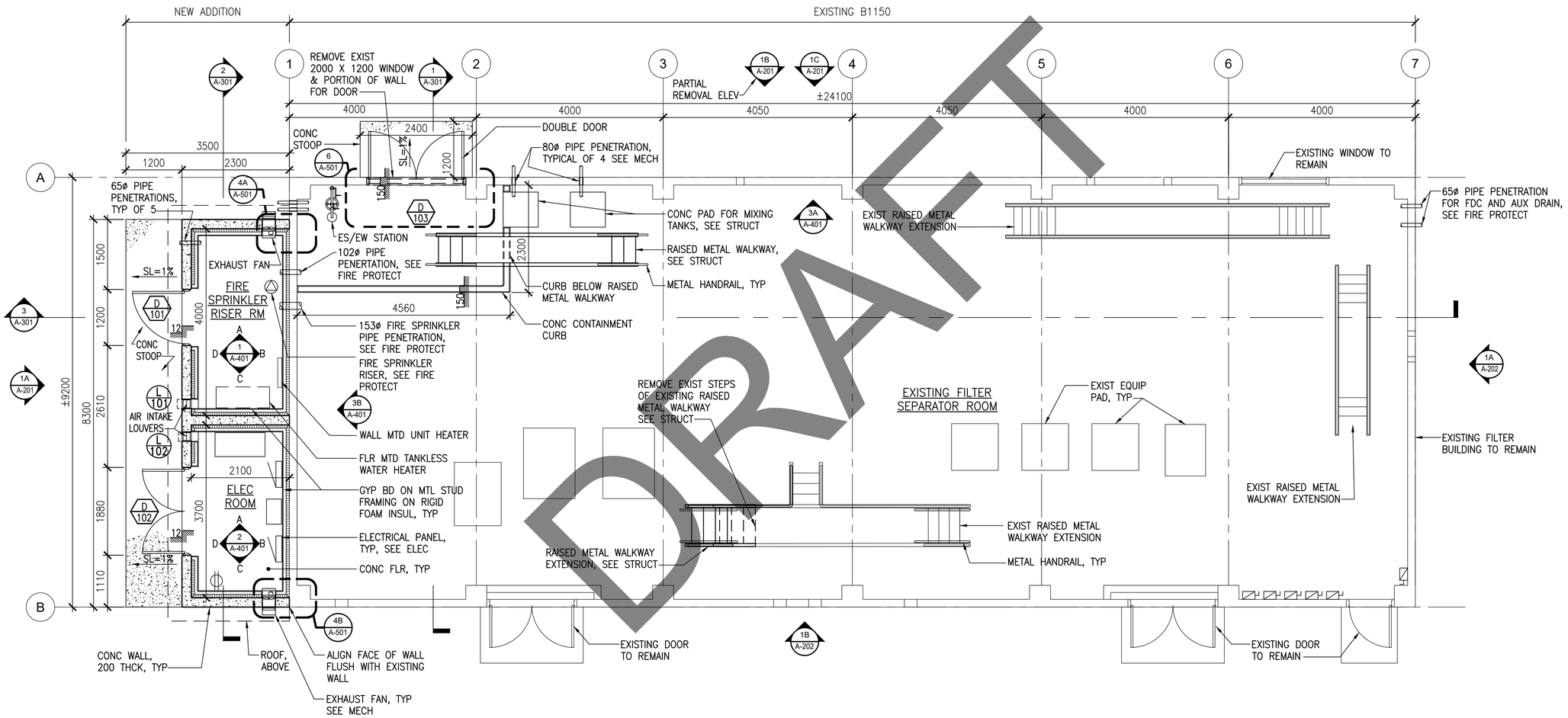

1 B1150 FLOOR PLAN

SCALE: 1:50

NOTE: FUEL PIPING AND EQUIPMENT NOT SHOWN FOR CLARITY, COORDINATE ALL WALL PENETRATIONS WITH APPLICABLE ENGINEERING DISCIPLINES PRIOR TO PLACING CONCRETE

US Army Corps of Engineers®

MARK	DESCRIPTION	DATE

DESIGNED BY: S. ANTOLIN
DRAWN BY: S. ANTOLIN
CHECKED BY: W. NAKAMURA
SUBMITTED BY: W. NAKAMURA
SIZE: ISO A1
ISSUE DATE: FEBRUARY 2022
SOLICITATION NO.:
CONTRACT NO.: W912HV-17-D-0007
DRAWING CODE: -
FILE NAME: DESSC20UX-A-101.dwg

U.S. ARMY CORPS OF ENGINEERS
JAPAN DISTRICT
APO AP 96343-5010

HDR - WTNA JV
1001 BISHOP STREET
SUITE 400
HONOLULU, HAWAII 96813

MISAWA AIR BASE, JAPAN
DESC 20UX INSTALL ADDITIVE INJECTION SYSTEM

B1150 FLOOR PLAN

SHEET ID
A-101

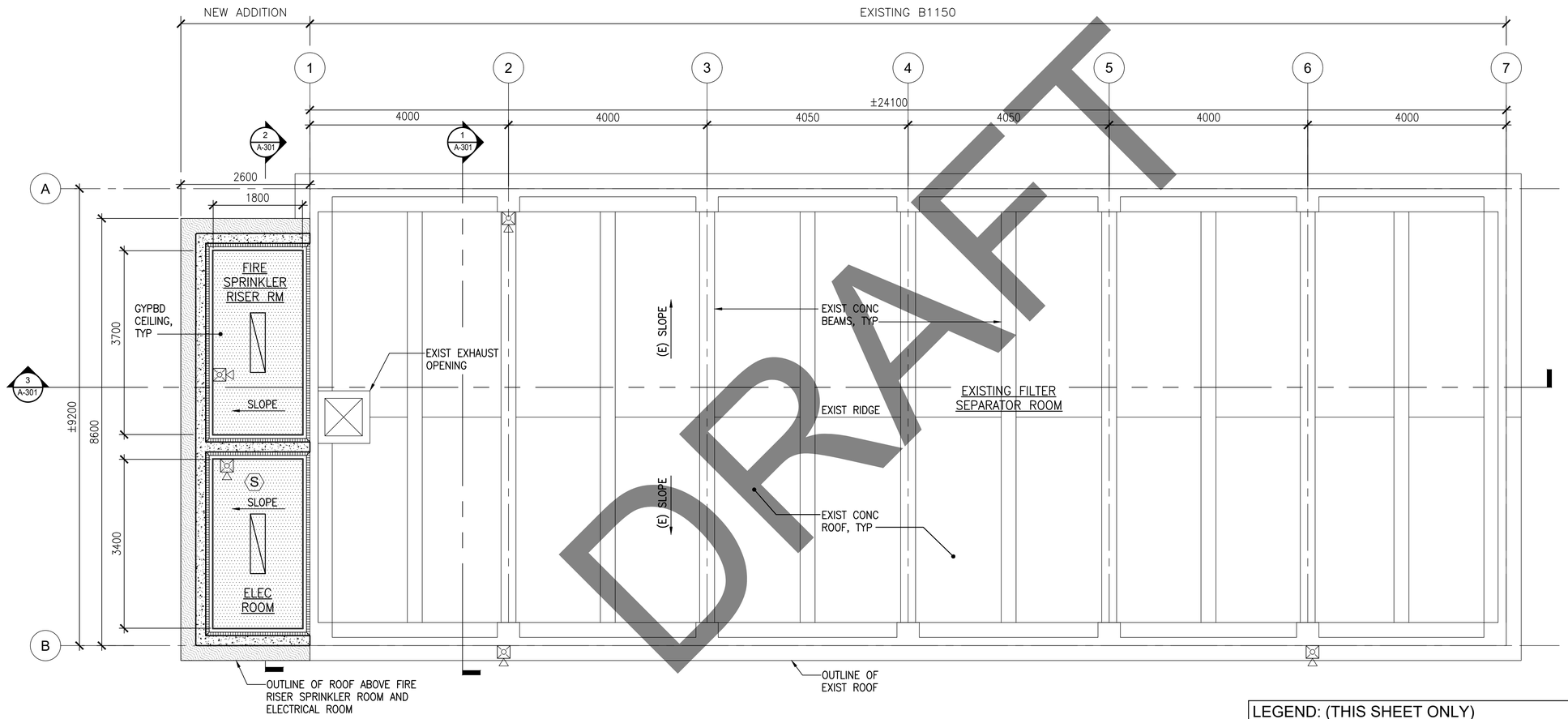

DRAFT

LEGEND: (THIS SHEET ONLY)

	GYPBD CEILING		RECESSED LIGHT FIXTURE, SEE ELEC
	UNDERSIDE OF EXIST CONC ROOF		FIRE ALARM HORN, SEE FIRE PROTECT
	UNDERSIDE OF NEW CONC ROOF	S	SMOKE DETECTOR, SEE FIRE PROTECT

N

NOTE: FUEL PIPING AND EQUIPMENT NOT SHOWN FOR CLARITY, COORDINATE ALL WALL PENETRATIONS WITH APPLICABLE ENGINEERING DISCIPLINES PRIOR TO PLACING CONCRETE

1 B1150 REFLECTED CEILING PLAN

SCALE: 1:50

0 1 2m

US Army Corps of Engineers®

MARK	DESCRIPTION	DATE

DESIGNED BY: S. ANTOLIN
DRAWN BY: S. ANTOLIN
CHECKED BY: W. NAKAMURA
SUBMITTED BY: W. NAKAMURA
SIZE: ISO A1
ISSUE DATE: FEBRUARY 2022
SOLICITATION NO.: -
CONTRACT NO.: W912HV-17-D-0007
DRAWING CODE: -
FILE NAME: DESSC20UX-A-102.dwg

U.S. ARMY CORPS OF ENGINEERS
JAPAN DISTRICT
APO AP 96343-5010

HDR - WTNA JV
1001 BISHOP STREET
SUITE 400
HONOLULU, HAWAII 96813

MISAWA AIR BASE, JAPAN
DESC 20UX INSTALL ADDITIVE INJECTION SYSTEM

B1150 REFLECTED CEILING PLAN

SHEET ID

A-102

FILE: DESSC20UX-A-102.dwg
DATE: 10/18/2021 3:26 PM
OPER:
SCALE:

IF SHEET IS LESS THAN 594 X 841 MM
REDUCED PRINT = USE GRAPHIC SCALES

RTA SUBMITTAL

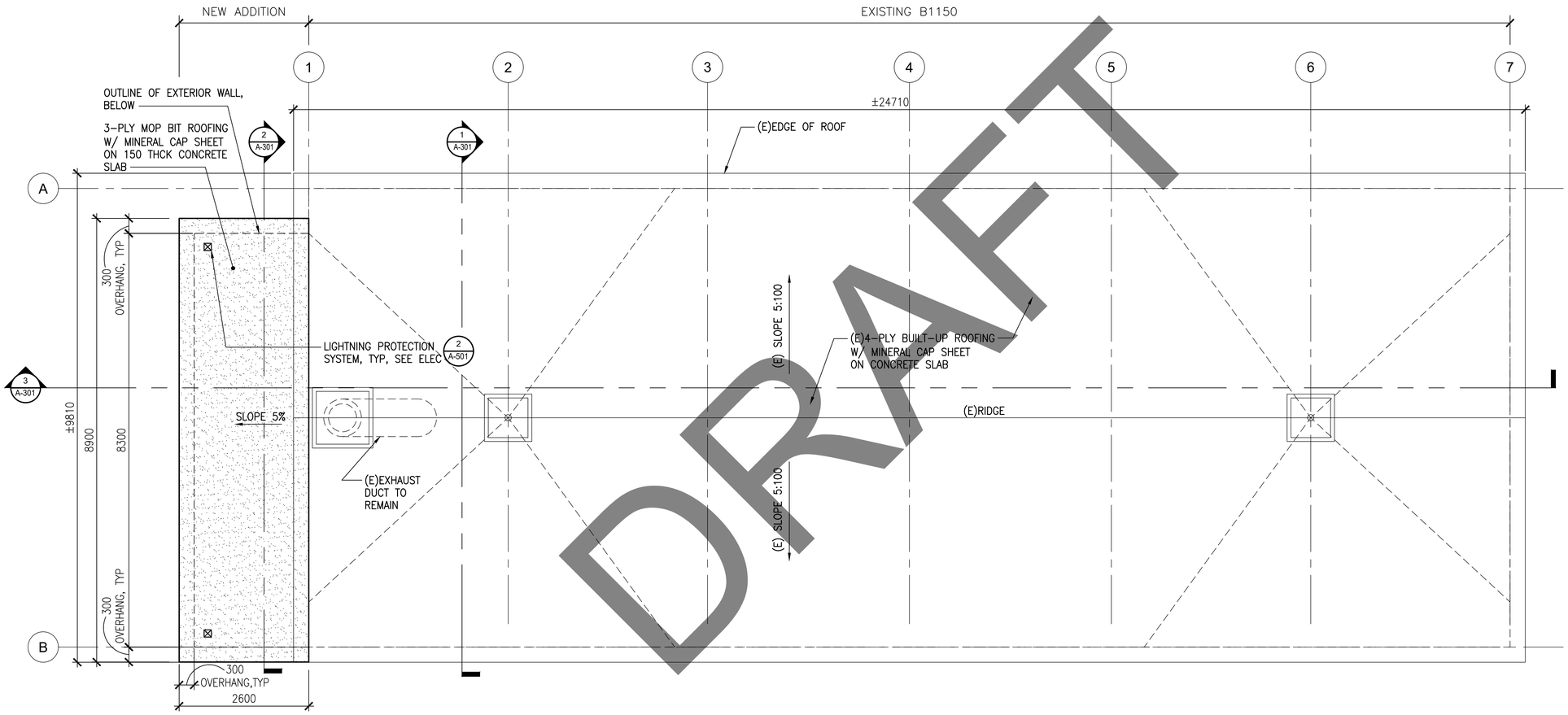

DRAFT

1 B1150 ROOF PLAN

SCALE: 1:50

N

0 1 2m

US Army Corps of Engineers®

MARK	DESCRIPTION	DATE

DESIGNED BY: S. ANTOLIN
DRAWN BY: S. ANTOLIN
CHECKED BY: W. NAKAMURA
SUBMITTED BY: W. NAKAMURA
SIZE: ISO A1
ISSUE DATE: FEBRUARY 2022
SOLICITATION NO.: -
CONTRACT NO.: W912HV-17-D-0007
DRAWING CODE: -
FILE NAME: DESSC20UX-A-103.dwg

U.S. ARMY CORPS OF ENGINEERS
JAPAN DISTRICT
APO AP 96343-5010

HDR - WTNA JV
1001 BISHOP STREET
SUITE 400
HONOLULU, HAWAII 96813

MISAWA AIR BASE, JAPAN
DESC 20UX INSTALL ADDITIVE INJECTION SYSTEM

B1150 ROOF PLAN

SHEET ID

A-103

FILE: DESSC20UX-A-103.dwg
DATE: 10/18/2021 3:26 PM
OPER:
SCALE:

IF SHEET IS LESS THAN 594 X 841 MM
REDUCED PRINT = USE GRAPHIC SCALES

RTA SUBMITTAL

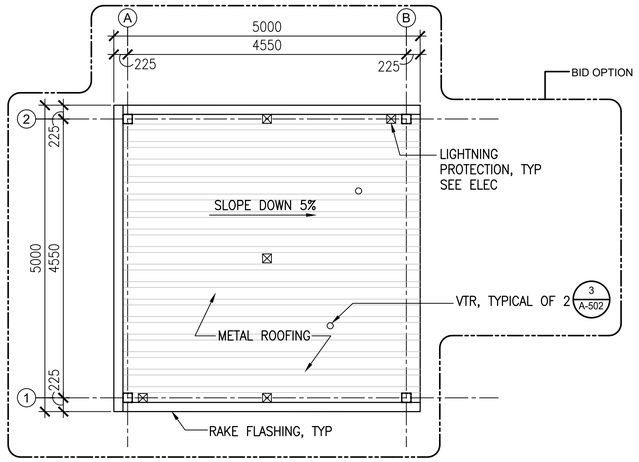

1 CANOPY ROOF PLAN
SCALE: 1:50

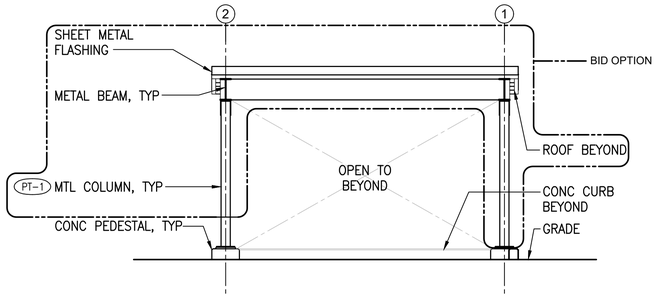

4A - NORTH ELEVATION

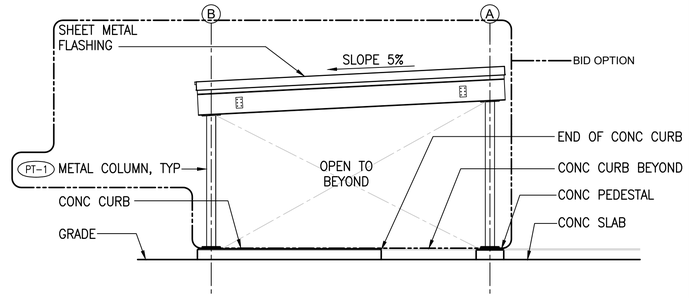

4B - EAST ELEVATION

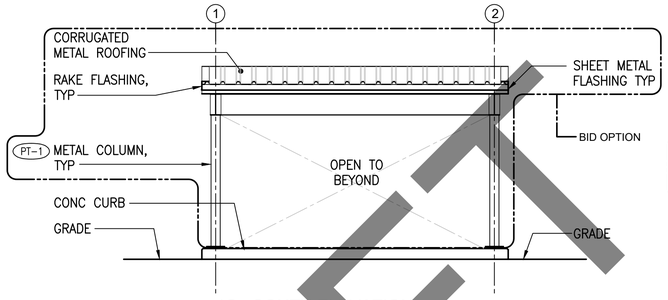

4C - SOUTH ELEVATION

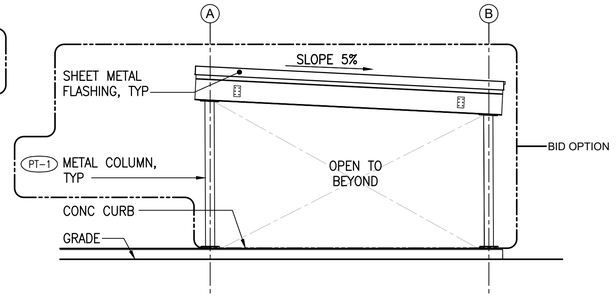

4D - WEST ELEVATION

4 CANOPY EXTERIOR ELEVATIONS
SCALE: 1:50

NOTE: FUEL PIPING AND EQUIPMENT NOT SHOWN FOR CLARITY, COORDINATE ALL WALL PENETRATIONS WITH APPLICABLE ENGINEERING DISCIPLINES PRIOR TO PLACING CONCRETE

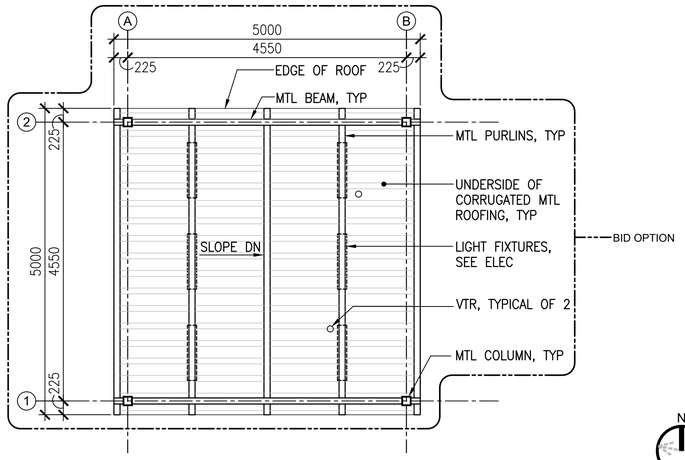

2 CANOPY REFLECTED CEILING PLAN
SCALE: 1:50

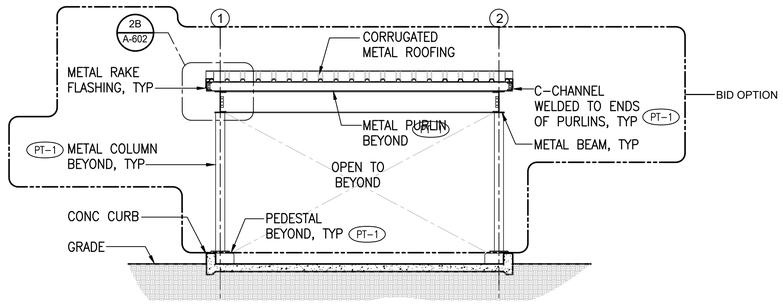

5A - CROSS SECTION

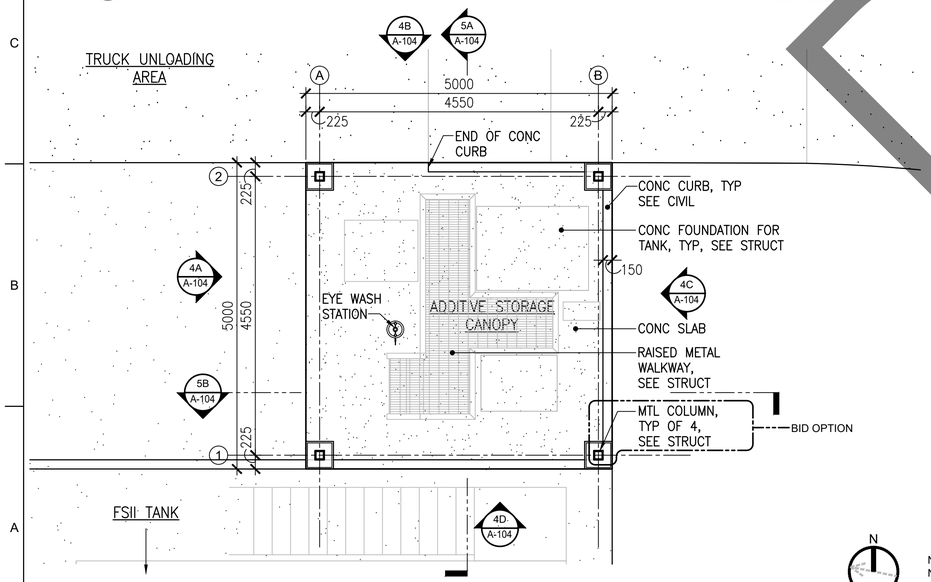

3 CANOPY FLOOR PLAN
SCALE: 1:50

NOTE: FUEL PIPING AND EQUIPMENT NOT SHOWN FOR CLARITY, COORDINATE ALL WALL PENETRATIONS WITH APPLICABLE ENGINEERING DISCIPLINES PRIOR TO PLACING CONCRETE

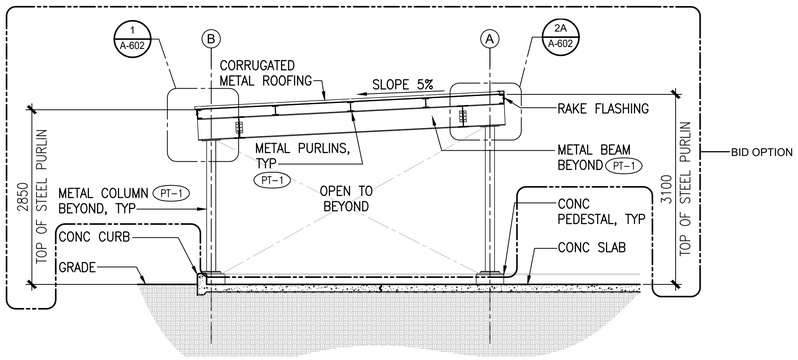

5B - LONGITUDINAL SECTION

5 CANOPY BUILDING SECTIONS
SCALE: 1:50

NOTE: FUEL PIPING AND EQUIPMENT NOT SHOWN FOR CLARITY, COORDINATE ALL WALL PENETRATIONS WITH APPLICABLE ENGINEERING DISCIPLINES PRIOR TO PLACING CONCRETE

DRAFT

US Army Corps of Engineers®

MARK	DESCRIPTION	DATE

ISSUE DATE: FEBRUARY 2022
SOLICITATION NO.: -
CONTRACT NO.: W912HV-17-D-0007
DRAWING CODE: -
FILE NAME: DESSC20UX-A-104.dwg

DESIGNED BY: S. ANTOLIN
DRAWN BY: S. ANTOLIN
CHECKED BY: W. NAKAMURA
SUBMITTED BY: W. NAKAMURA
SIZE: ISO A1

U.S. ARMY CORPS OF ENGINEERS
JAPAN DISTRICT
APO AP 96343-5010

HDR - WTNA JV
1001 BISHOP STREET
SUITE 400
HONOLULU, HAWAII 96813

MISAWA AIR BASE, JAPAN
DESC 20UX INSTALL ADDITIVE INJECTION SYSTEM

CANOPY PLANS, ELEVATIONS, SECTIONS

SHEET ID
A-104

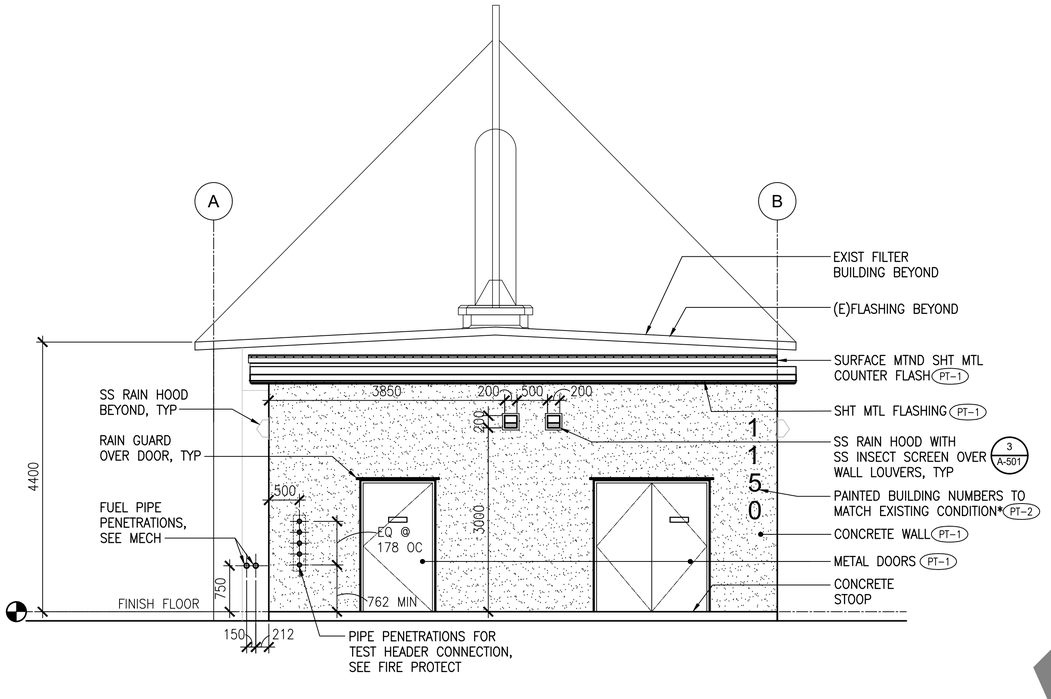

1A - NORTH ELEVATION

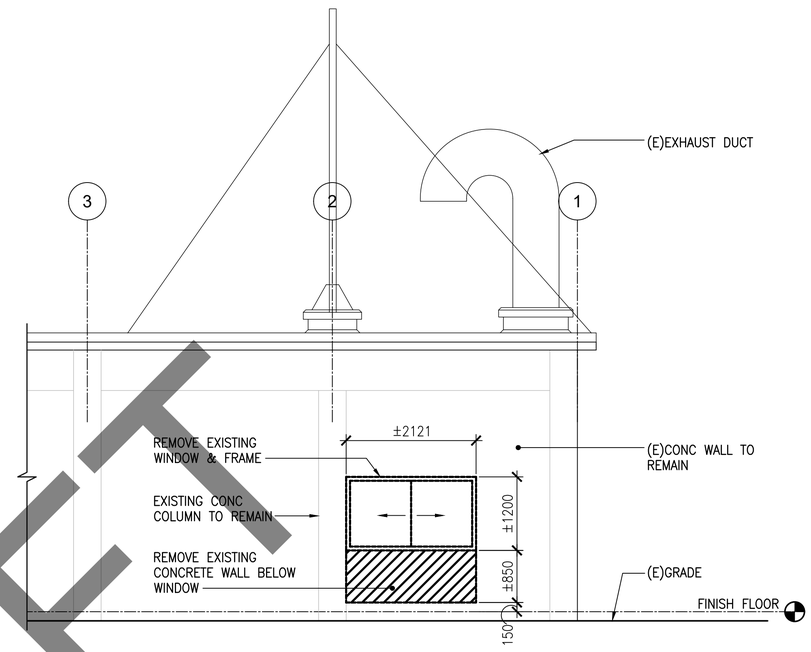

1B - PARTIAL EAST ELEVATION (REMOVAL)

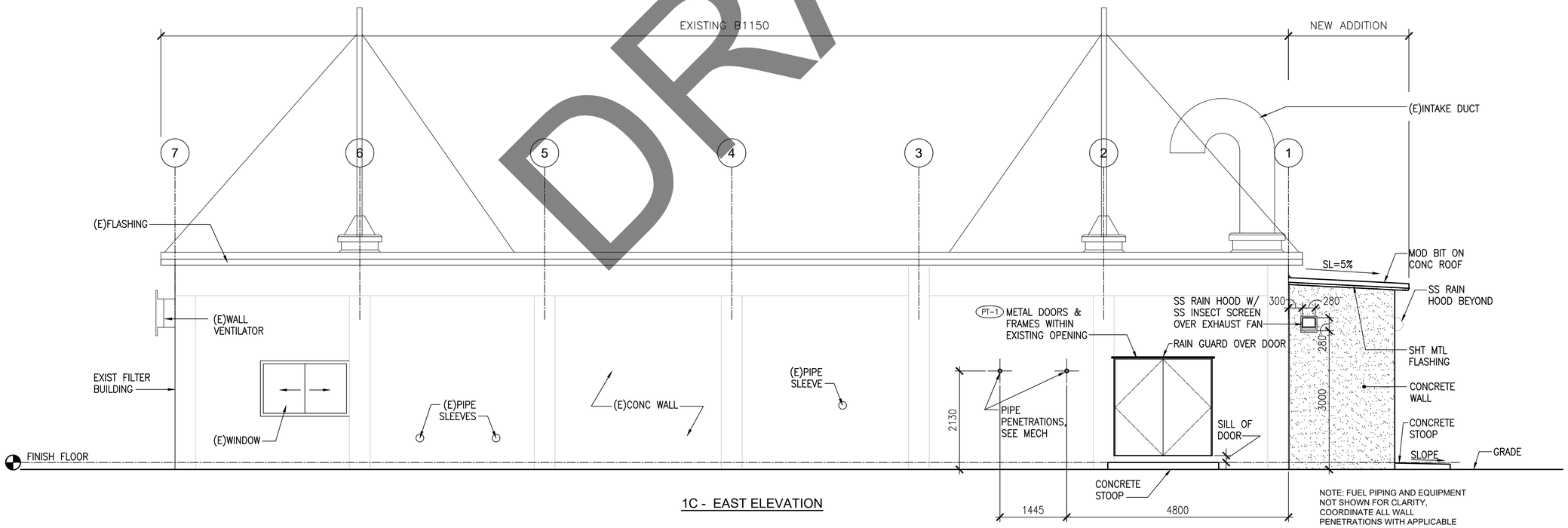

1C - EAST ELEVATION

NOTE: FUEL PIPING AND EQUIPMENT NOT SHOWN FOR CLARITY, COORDINATE ALL WALL PENETRATIONS WITH APPLICABLE ENGINEERING DISCIPLINES PRIOR TO PLACING CONCRETE

* COORDINATE PAINTED BUILDING NUMBER & LOCATION WITH CONTRACTING OFFICER

1 B1150 EXTERIOR ELEVATIONS

SCALE: 1:50

0 1 2m

DRAFT

US Army Corps of Engineers®

MARK	DESCRIPTION	DATE

DESIGNED BY: S. ANTOLIN
DRAWN BY: S. ANTOLIN
CHECKED BY: W. NAKAMURA
SUBMITTED BY: W. NAKAMURA
SIZE: ISO A1
ISSUE DATE: FEBRUARY 2022
SOLICITATION NO.:
CONTRACT NO.: W912HV-17-D-0007
DRAWING CODE: -
FILE NAME: DESSC20UX-A-201.dwg

U.S. ARMY CORPS OF ENGINEERS
JAPAN DISTRICT
APO AP 96343-5010

HDR - WTNA JV
1001 BISHOP STREET
SUITE 400
HONOLULU, HAWAII 96813

MISAWA AIR BASE, JAPAN
DESC 20UX INSTALL ADDITIVE INJECTION SYSTEM

B1150 EXTERIOR ELEVATIONS

SHEET ID

A-201

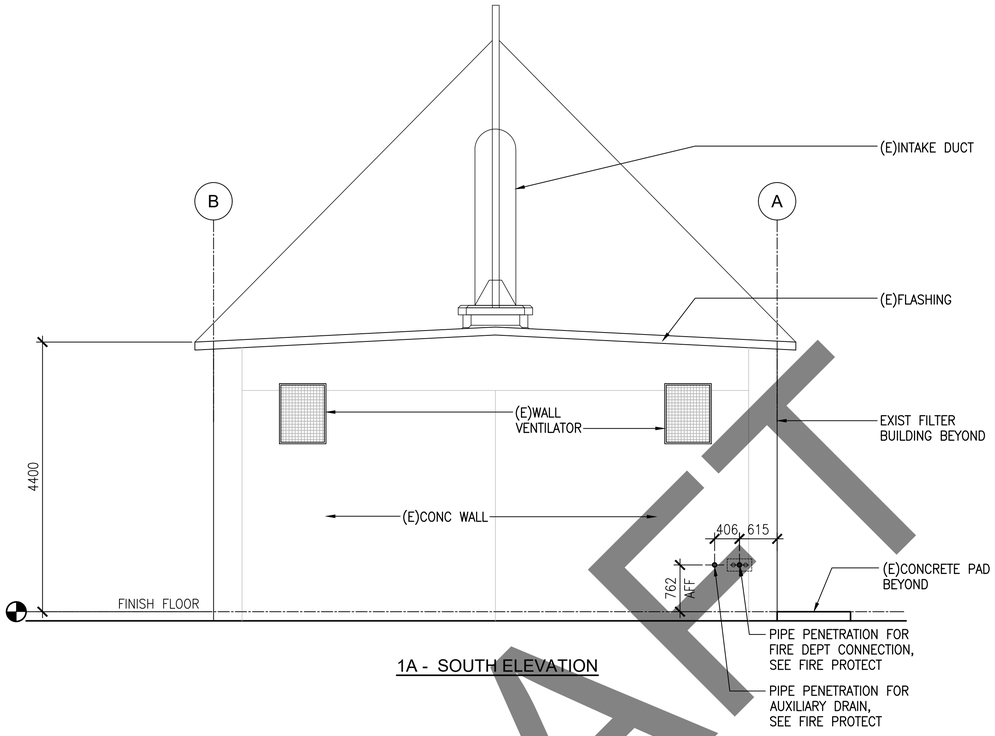

1A - SOUTH ELEVATION

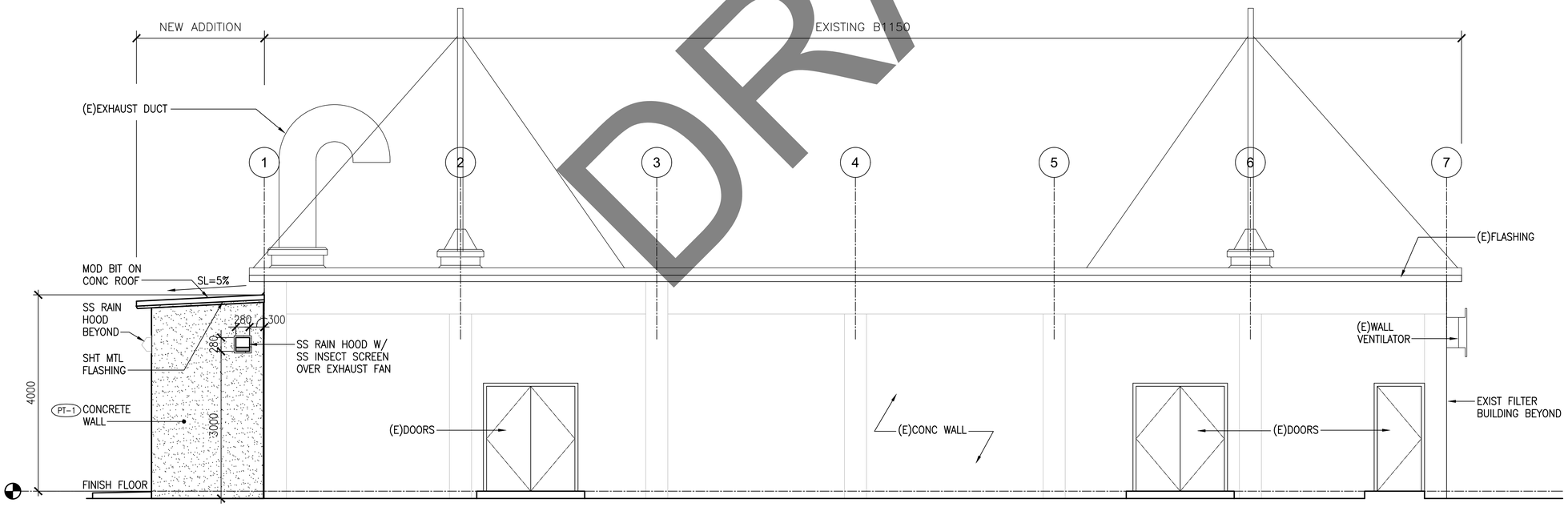

1B - WEST ELEVATION

NOTE: FUEL PIPING AND EQUIPMENT NOT SHOWN FOR CLARITY, COORDINATE ALL WALL PENETRATIONS WITH APPLICABLE ENGINEERING DISCIPLINES PRIOR TO PLACING CONCRETE

* COORDINATE PAINTED BUILDING NUMBER & LOCATION WITH CONTRACTING OFFICER

1 B1150 EXTERIOR ELEVATIONS

SCALE: 1:50

0 1 2m

DRAFT

US Army Corps of Engineers®

MARK	DESCRIPTION	DATE

DESIGNED BY: S. ANTOLIN
DRAWN BY: S. ANTOLIN
CHECKED BY: W. NAKAMURA
SUBMITTED BY: W. NAKAMURA
SIZE: ISO A1
ISSUE DATE: FEBRUARY 2022
SOLICITATION NO.: -
CONTRACT NO.: W912HV-17-D-0007
DRAWING CODE: -
FILE NAME: DESSC20UX-A-202.dwg

U.S. ARMY CORPS OF ENGINEERS
JAPAN DISTRICT
APO AP 96343-5010

HDR - WTNA JV
1001 BISHOP STREET
SUITE 400
HONOLULU, HAWAII 96813

MISAWA AIR BASE, JAPAN
DESC 20UX INSTALL ADDITIVE INJECTION SYSTEM

B1150 EXTERIOR ELEVATIONS

SHEET ID

A-202

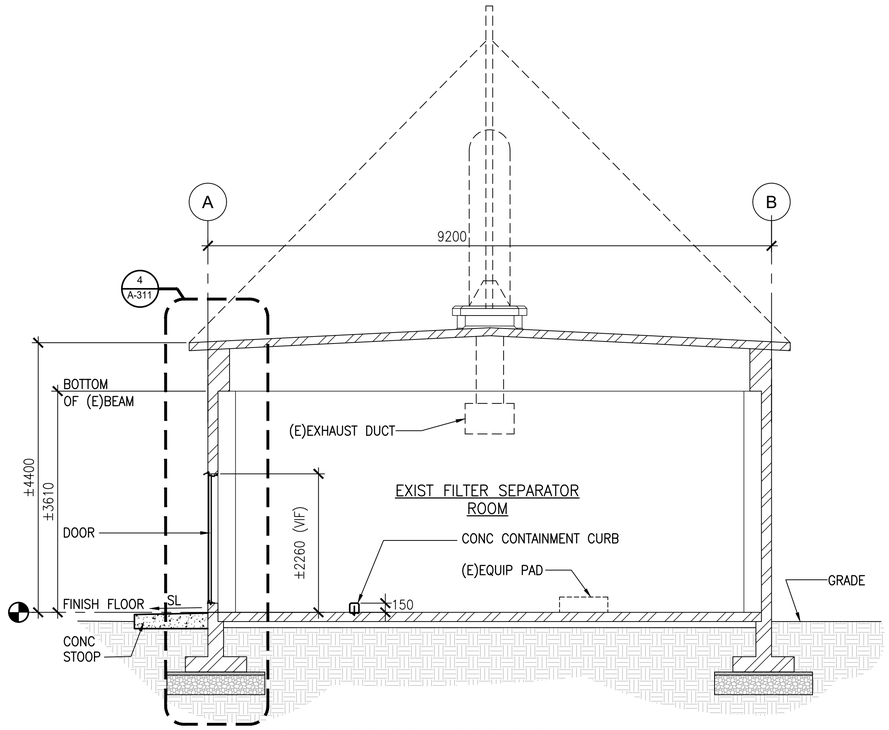

1 B1150 BUILDING CROSS SECTION

SCALE: 1:50

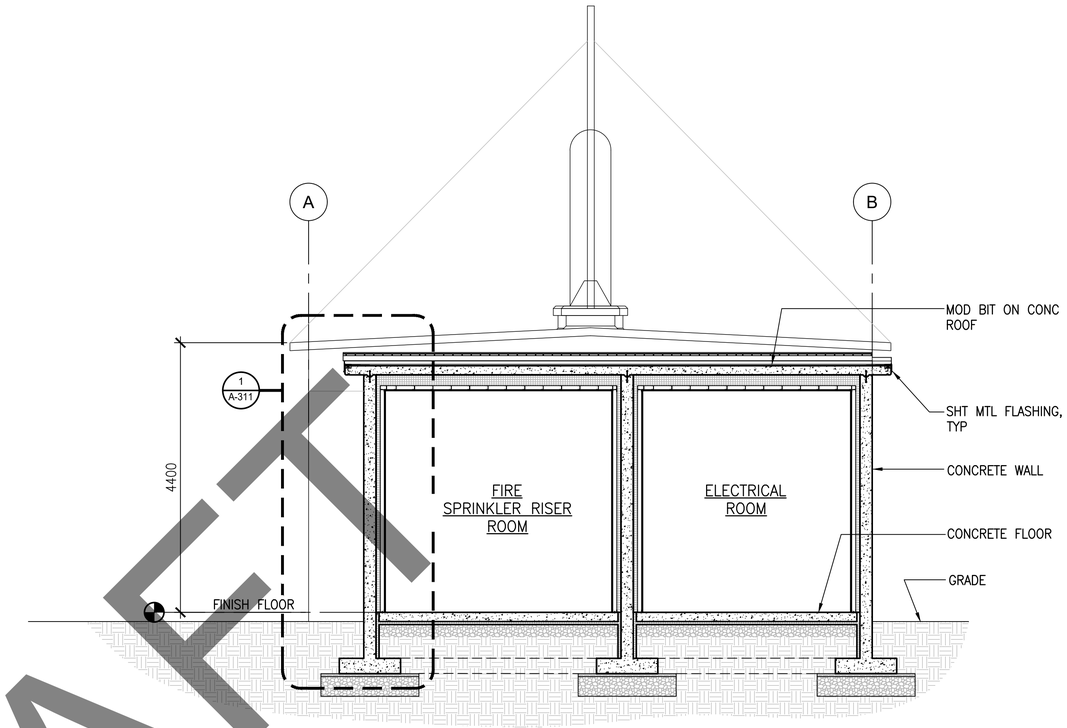

2 B1150 BUILDING ADDITION CROSS SECTION

SCALE: 1:50

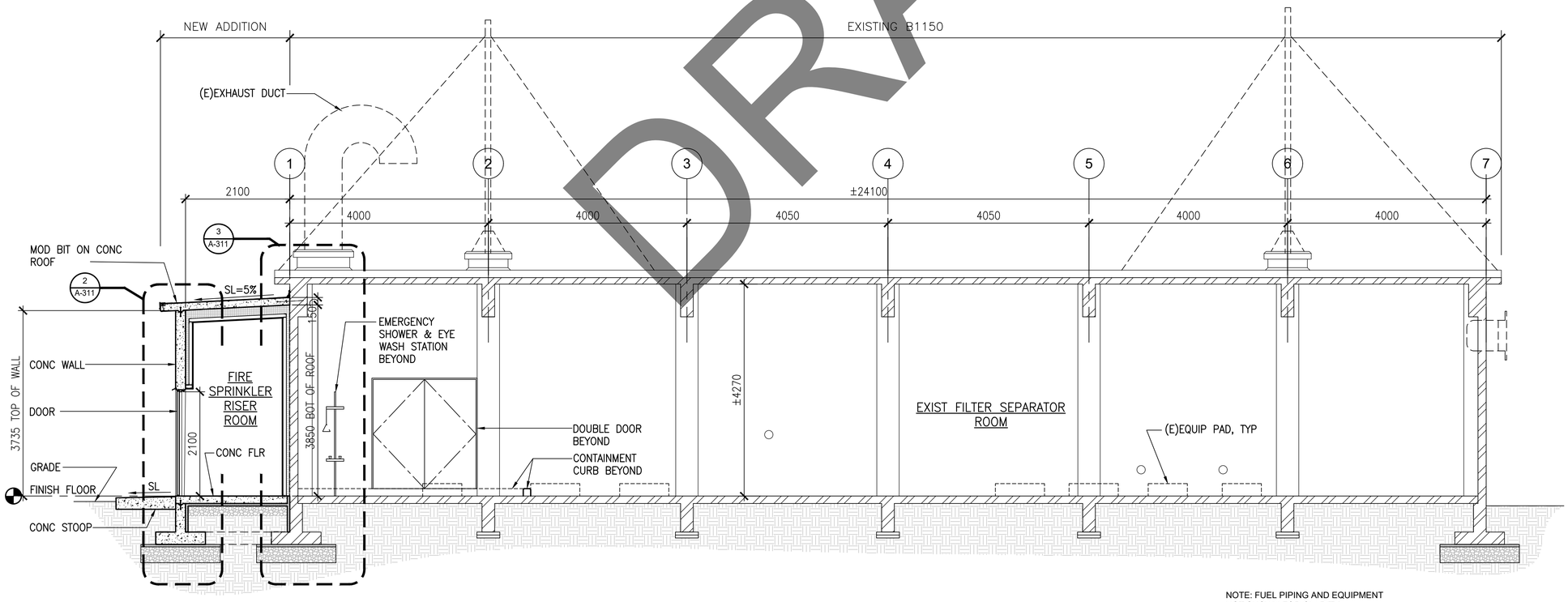

3 B1150 BUILDING LONGITUDINAL SECTION

SCALE: 1:50

NOTE: FUEL PIPING AND EQUIPMENT NOT SHOWN FOR CLARITY, COORDINATE ALL WALL PENETRATIONS WITH APPLICABLE ENGINEERING DISCIPLINES PRIOR TO PLACING CONCRETE

DRAFT

US Army Corps of Engineers®

MARK	DESCRIPTION	DATE

DESIGNED BY: S. ANTOLIN
DRAWN BY: S. ANTOLIN
CHECKED BY: W. NAKAMURA
SUBMITTED BY: W. NAKAMURA
SIZE: ISO A1
ISSUE DATE: FEBRUARY 2022
SOLICITATION NO.:
CONTRACT NO.: W912HV-17-D-0007
DRAWING CODE: -
FILE NAME: DESSC20UX-A-301.dwg

U.S. ARMY CORPS OF ENGINEERS
JAPAN DISTRICT
APO AP 96343-5010

HDR - WTNA JV
1001 BISHOP STREET
SUITE 400
HONOLULU, HAWAII 96813

MISAWA AIR BASE, JAPAN
DESC 20UX INSTALL ADDITIVE INJECTION SYSTEM

B1150 BUILDING SECTIONS

SHEET ID

A-301

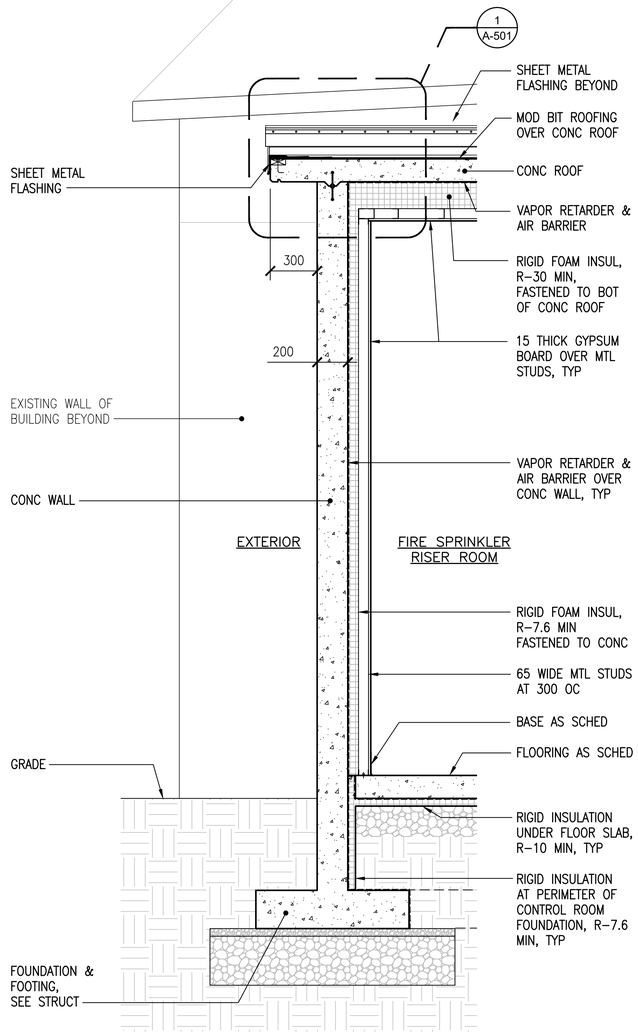

1 WALL SECTION
SCALE: 1:20
0 500 1000mm

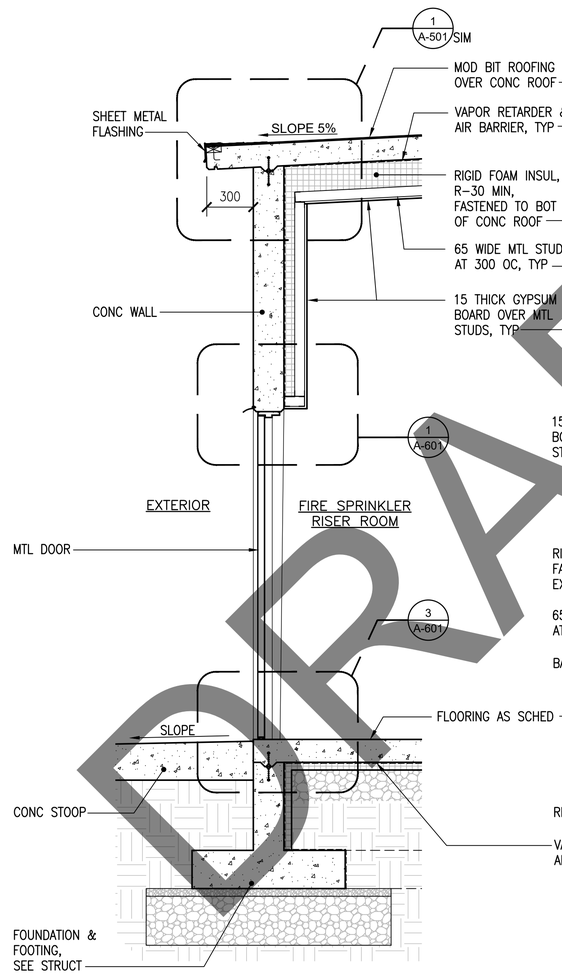

2 WALL SECTION
SCALE: 1:20
0 500 1000mm

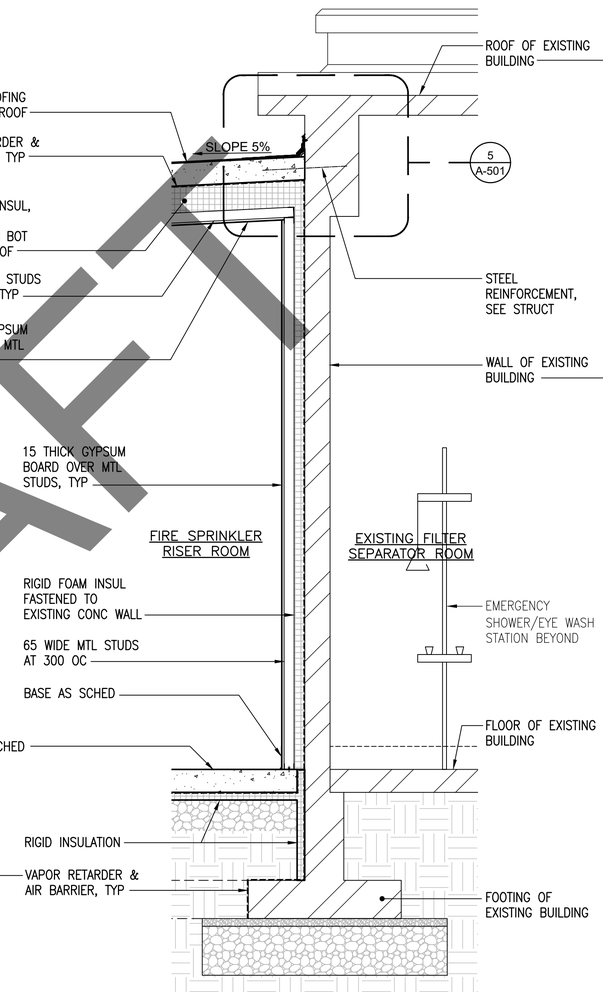

3 WALL SECTION
SCALE: 1:20
0 500 1000mm

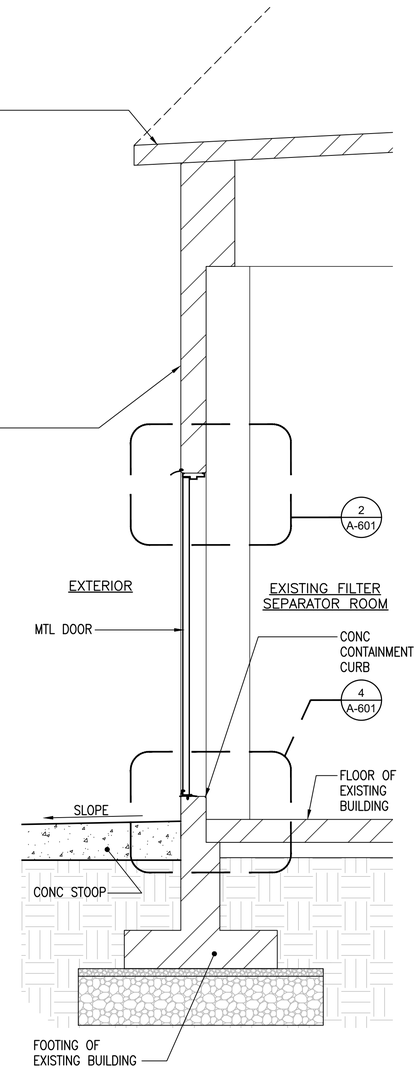

4 WALL SECTION
SCALE: 1:20
0 500 1000mm

AIR BARRIER NOTE:

A. BUILDING IS REQUIRED TO HAVE A COMPREHENSIVE AIR BARRIER. AIR BARRIER PERFORMANCE MUST BE TESTED AND CONFIRMED. SEE SPEC SECTION 07 27 00 AND 01 45 00 FOR AIR BARRIER AND TESTING REQUIREMENTS.
B. PLANS AND SECTION THIS SHEET PROVIDE A SCHEMATIC REPRESENTATION OF AIR BARRIER LOCATION AND INTERNAL FACILITY VOLUME WITHIN THE AIR BARRIER PERIMETER.
C. SEAL AIR BARRIER MEMBRANE PENETRATIONS CAUSED BY FIRE PROTECTION, PLUMBING, MECHANICAL ELECTRICAL AND TELECOMMUNICATIONS SYSTEMS AND COMPONENTS. PENETRATIONS THROUGH FLOOR, ROOF AND WALL ASSEMBLIES SHALL BE SEALED TO CREATE A CONTINUOUS AIR BARRIER AND MEET FIRE RESISTANCE CRITERIA OF RATED ASSEMBLIES.
D. SEE WALL SECTIONS AND DETAILS FOR ADDITIONAL INFORMATION ON COORDINATION OF AIR BARRIER MEMBRANE AND INTEGRATION OF THE AIR BARRIER WITH VAPOR RETARDERS.
E. VERIFY INTEGRITY AND PERFORMANCE OF AIR BARRIER PRIOR TO CONCEALING WITH OTHER MATERIALS.
F. AIR BARRIER COMPONENTS SHALL BE INCORPORATED IN WALL SYSTEM MOCK-UP DURING CONSTRUCTION.

DRAFT

US Army Corps of Engineers®

MARK	DESCRIPTION	DATE

ISSUE DATE: FEBRUARY 2022
SOLICITATION NO.:
CONTRACT NO.: W912HV-17-D-0007
DRAWING CODE: -
DESIGNED BY: S. ANTOLIN
DRAWN BY: S. ANTOLIN
CHECKED BY: W. NAKAMURA
SUBMITTED BY: W. NAKAMURA
SIZE: ISO A1
FILE NAME: DESSC20UX-A-311.dwg

U.S. ARMY CORPS OF ENGINEERS
JAPAN DISTRICT
APO AP 96343-5010

HDR - WTNA JV
1001 BISHOP STREET
SUITE 400
HONOLULU, HAWAII 96813

MISAWA AIR BASE, JAPAN
DESC 20UX INSTALL ADDITIVE INJECTION SYSTEM

B1150 BUILDING SECTIONS

SHEET ID
A-311

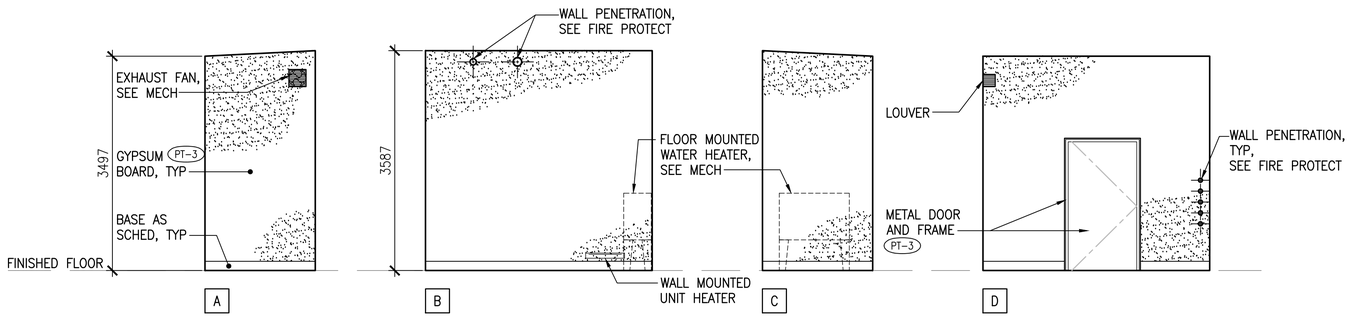

1 FIRE RISER SPRINKLER ROOM INTERIOR ELEVATIONS

SCALE: 1:50

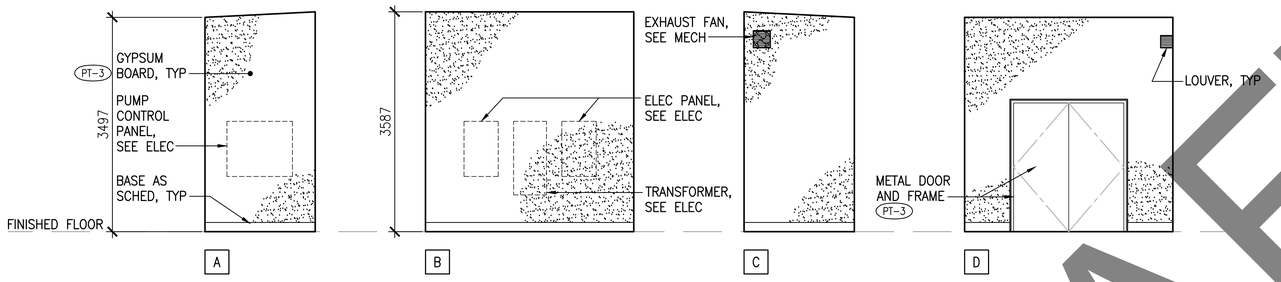

2 ELECTRICAL ROOM INTERIOR ELEVATIONS

SCALE: 1:50

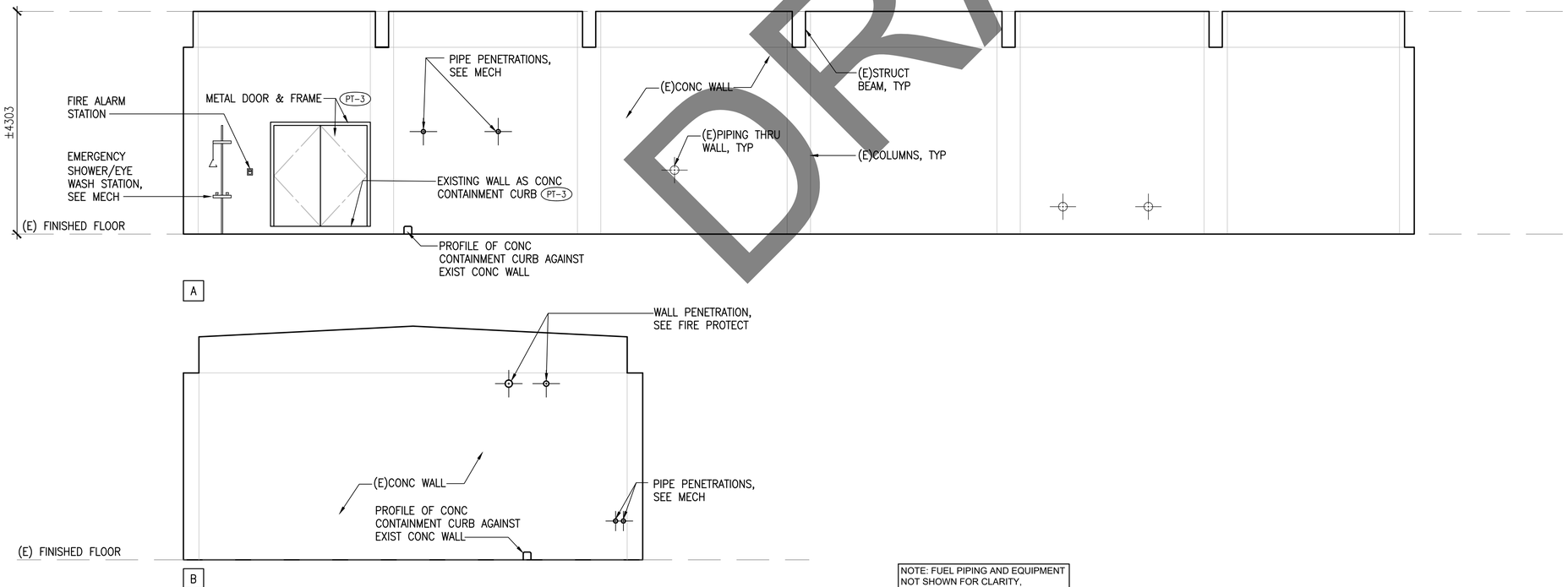

NOTE: FUEL PIPING AND EQUIPMENT NOT SHOWN FOR CLARITY, COORDINATE ALL WALL PENETRATIONS WITH APPLICABLE ENGINEERING DISCIPLINES PRIOR TO PLACING CONCRETE

3 EXIST FILTER ROOM INTERIOR ELEVATION

SCALE: 1:50

DRAFT

US Army Corps of Engineers®

MARK	DESCRIPTION	DATE

DESIGNED BY: S. ANTOLIN
DRAWN BY: S. ANTOLIN
CHECKED BY: W. NAKAMURA
SUBMITTED BY: W. NAKAMURA
SIZE: ISO A1
ISSUE DATE: FEBRUARY 2022
SOLICITATION NO.:
CONTRACT NO.: W912HV-17-D-0007
DRAWING CODE: -
FILE NAME: DESSC20UX-A-401.dwg

U.S. ARMY CORPS OF ENGINEERS
JAPAN DISTRICT
APO AP 96343-5010

HDR - WTNA JV
1001 BISHOP STREET
SUITE 400
HONOLULU, HAWAII 96813

MISAWA AIR BASE, JAPAN
DESC 20UX INSTALL ADDITIVE INJECTION SYSTEM

B1150 INTERIOR ELEVATIONS

SHEET ID
A-401

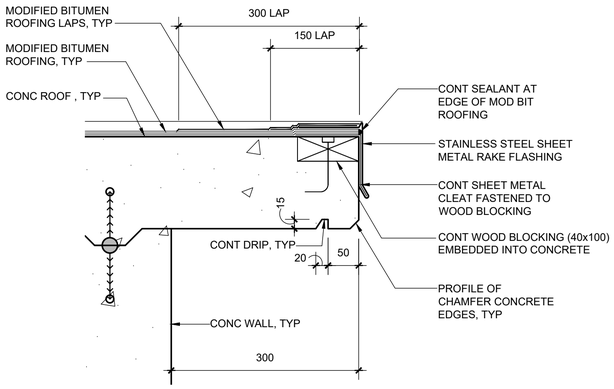

1 EAVE DETAIL

SCALE: 1:5

0 100 200mm

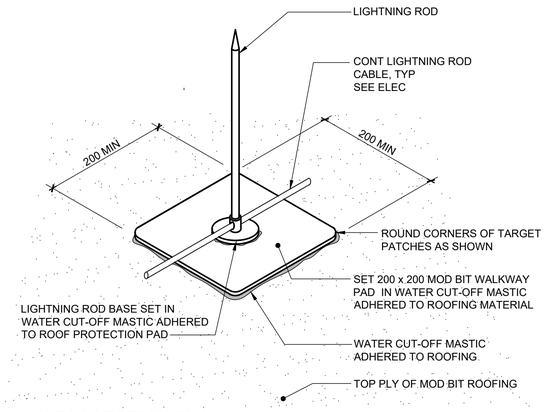

*SIMILAR CONDITION AT METAL ROOFING, INSTALL PER MANUFACTURER RECOMMENDATIONS

2 LIGHTNING PROTECTION ROD DETAIL

NOT TO SCALE

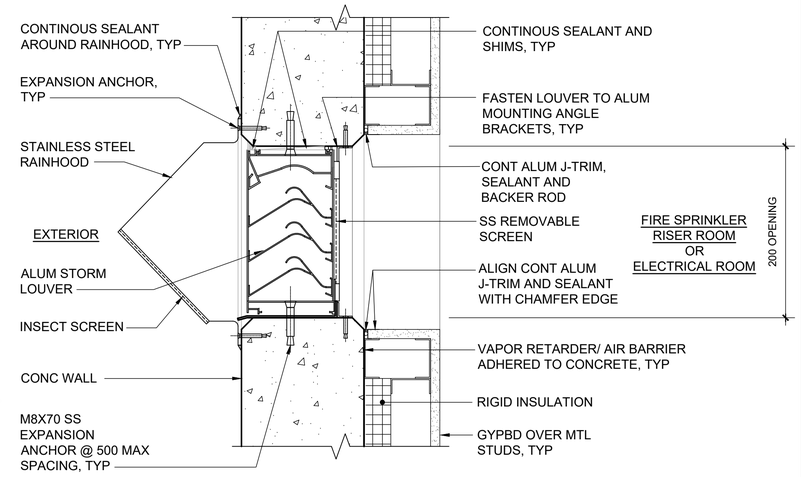

3 LOUVER SECTION

SCALE: 1:5

0 100 200mm

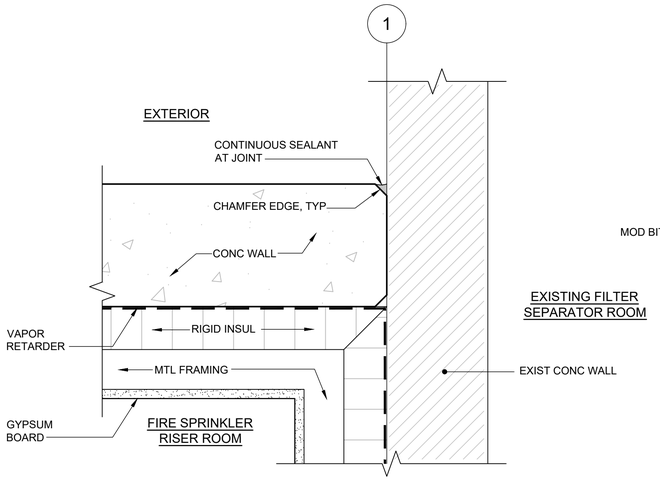

4A - WALL TERMINATION JOINT

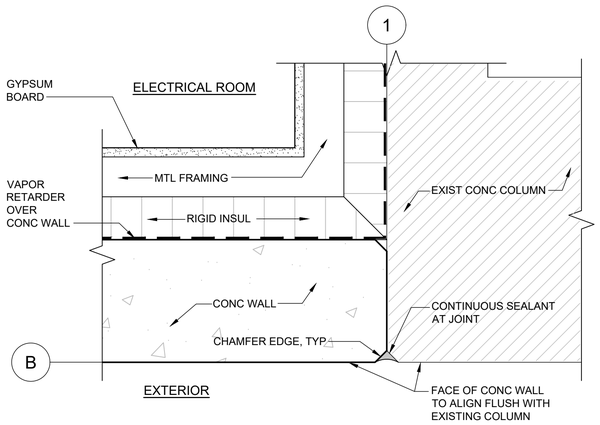

4B - WALL TERMINATION JOINT

4 WALL TERMINATION JOINT

SCALE: 1:5

0 100 200mm

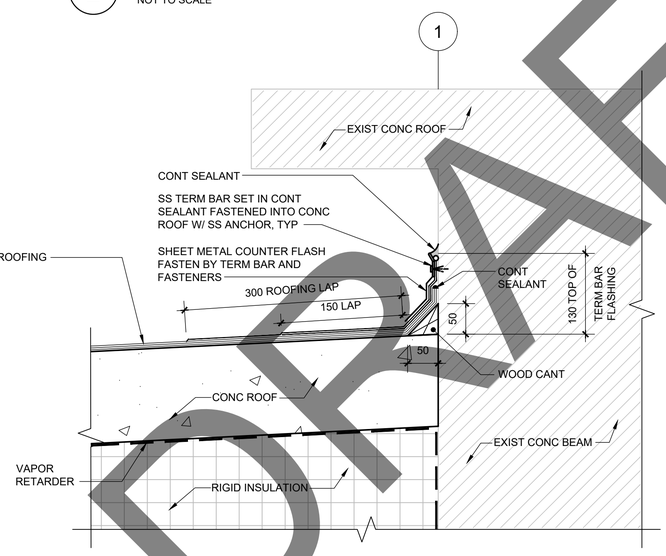

5 COUNTER FLASHING DETAIL

NOT TO SCALE

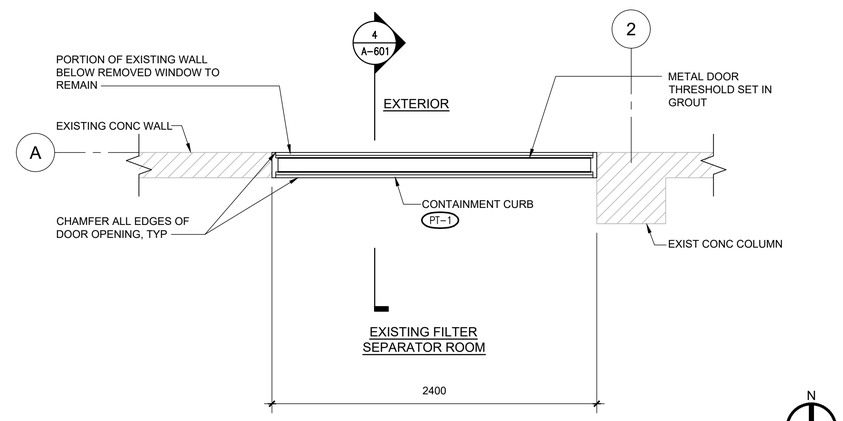

6 ENLARGED CONTAINMENT CURB PLAN

SCALE: 1:20

0 500 1000mm

DRAFT

US Army Corps of Engineers®

MARK	DESCRIPTION	DATE

DESIGNED BY: S. ANTOLIN
DRAWN BY: S. ANTOLIN
CHECKED BY: W. NAKAMURA
SUBMITTED BY: W. NAKAMURA
SIZE: ISO A1
ISSUE DATE: FEBRUARY 2022
SOLICITATION NO.:
CONTRACT NO.: W912HV-17-D-0007
DRAWING CODE: -
FILE NAME: DESSC20UX-A-501.dwg

U.S. ARMY CORPS OF ENGINEERS
JAPAN DISTRICT
APO AP 96343-5010

HDR - WTNA JV
1001 BISHOP STREET
SUITE 400
HONOLULU, HAWAII 96813

MISAWA AIR BASE, JAPAN
DESC 20UX INSTALL ADDITIVE INJECTION SYSTEM

ARCHITECTURAL DETAILS

SHEET ID

A-501

FILE: DESSC20UX-A-501.dwg
DATE: 10/18/2021 3:26 PM
OPER:
SCALE:

IF SHEET IS LESS THAN 594 X 841 MM
REDUCED PRINT = USE GRAPHIC SCALES

RTA SUBMITTAL

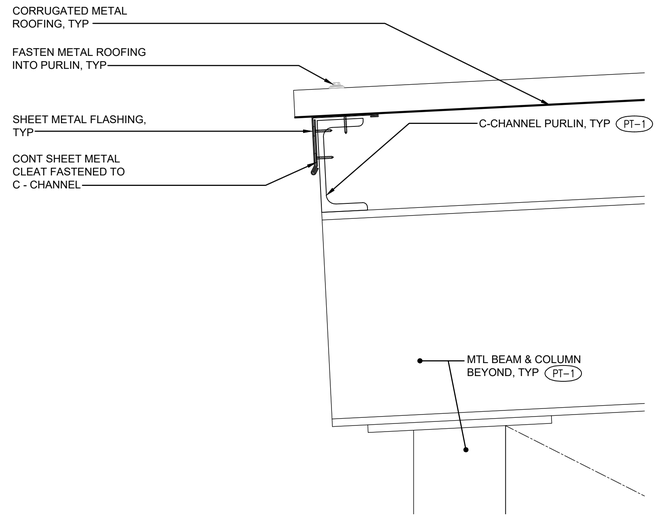

1 EDGE FLASHING DETAIL

SCALE: 1:5

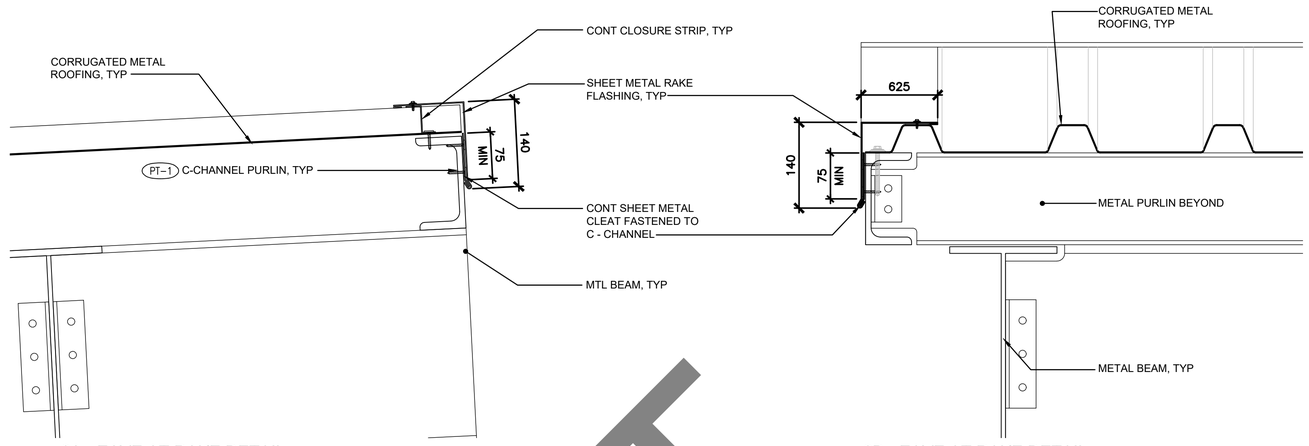

2A - EAVE AT RAKE DETAIL

2B - EAVE AT RAKE DETAIL

2 RAKE FLASHING DETAILS

SCALE: 1:5

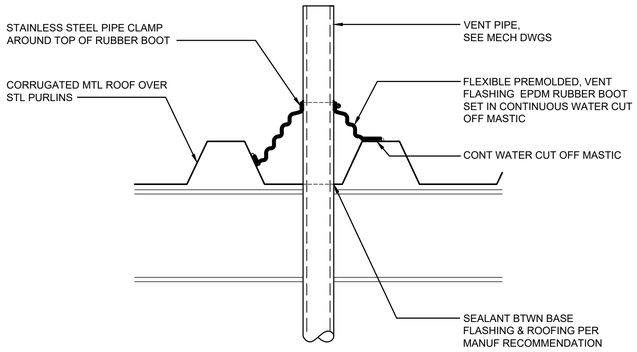

3 VTR @ METAL ROOFING

SCALE: 1:5

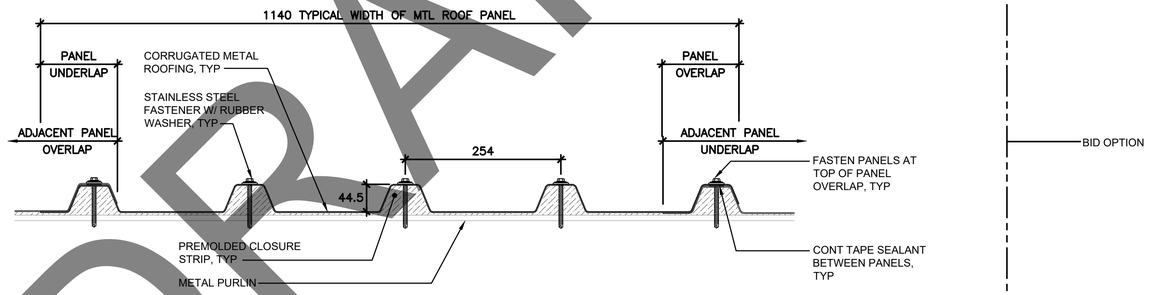

4 METAL ROOF PROFILE, LAPPING & FASTENING

SCALE: 1:10

DRAFT

US Army Corps of Engineers®

MARK	DESCRIPTION	DATE

DESIGNED BY: S. ANTOLIN
DRAWN BY: S. ANTOLIN
CHECKED BY: W. NAKAMURA
SUBMITTED BY: W. NAKAMURA
SIZE: ISO A1
ISSUE DATE: FEBRUARY 2022
SOLICITATION NO.:
CONTRACT NO.: W912HV-17-D-0007
DRAWING CODE: -
FILE NAME: DESSC20UX-A-502.dwg

U.S. ARMY CORPS OF ENGINEERS
JAPAN DISTRICT
APO AP 96343-5310

HDR - WTNA JV
1001 BISHOP STREET
SUITE 400
HONOLULU, HAWAII 96813

MISAWA AIR BASE, JAPAN
DESC 20UX INSTALL ADDITIVE INJECTION SYSTEM

METAL ROOF DETAILS

SHEET ID

A-502

FILE: DESSC20UX-A-502.dwg
DATE: 11/23/2021 10:38 AM
OPER:
SCALE:

IF SHEET IS LESS THAN 594 X 841 MM
REDUCED PRINT = USE GRAPHIC SCALES

RTA SUBMITTAL

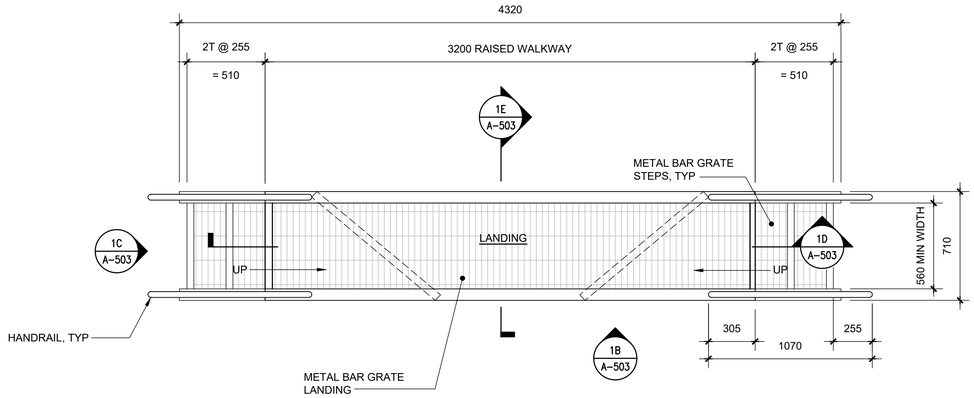

1A - PLAN VIEW OF RAISED WALKWAY

NOTE:

1) METAL GRATING FOR LANDINGS AND STAIR TREADS MUST BE WELDED STEEL WITH BEARING BARS SPACED AT 30 AND CROSS BARS SPACED AT 100. BEARING BAR SIZE MUST BE 25x5. TREADS AND LANDINGS MUST HAVE CHECKERED PLATE NOSINGS. TREADS MUST BE FABRICATED WITH CARRIER PLATES AT ENDS.

2) ALL GRATINGS, STRINGERS, ANGLES, PLATES AND BOLTS MUST BE GALVANIZED AND PAINTED AS INDICATED.

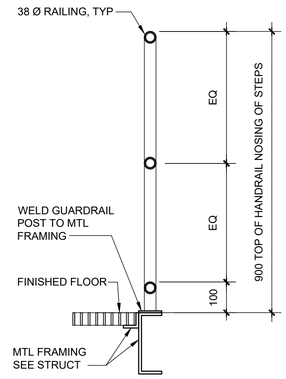

2 SECTION THRU HANDRAIL

SCALE: 1:10

0 200 400mm

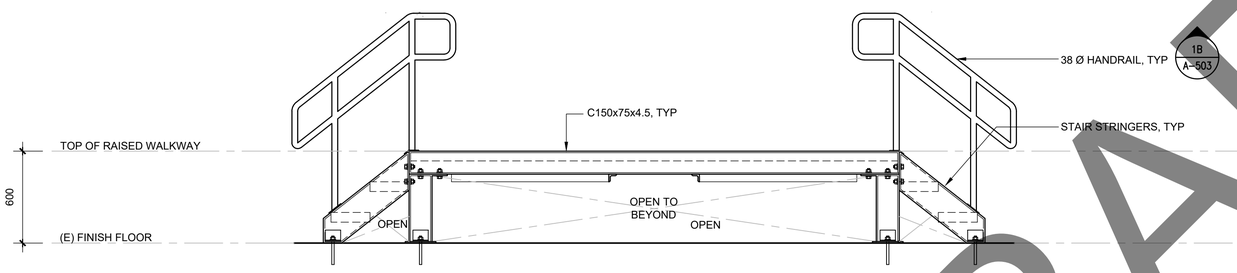

1B - ELEV VIEW OF RAISED WALKWAY

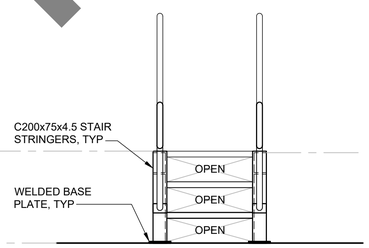

1C - ELEV VIEW OF RAISED WALKWAY

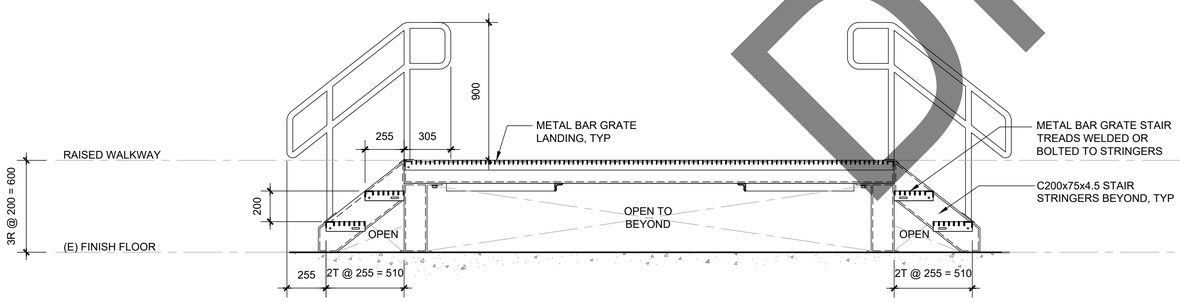

1D - SECT VIEW OF RAISED WALKWAY

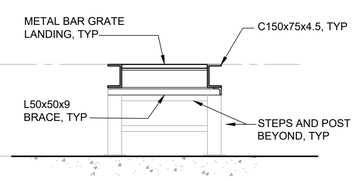

1E - SECT VIEW OF RAISED WALKWAY

1 RAISED WALKWAY DETAILS

SCALE: 1:20

0 500 1000mm

DRAFT

US Army Corps of Engineers®

MARK	DESCRIPTION	DATE

DESIGNED BY: S. ANTOLIN
DRAWN BY: S. ANTOLIN
CHECKED BY: W. NAKAMURA
SUBMITTED BY: W. NAKAMURA
SIZE: ISO A1
ISSUE DATE: FEBRUARY 2022
SOLICITATION NO.:
CONTRACT NO.: W912HV-17-D-0007
DRAWING CODE: -
FILE NAME: DESSC20UX-A-503.dwg

U.S. ARMY CORPS OF ENGINEERS
JAPAN DISTRICT
APO AP 96343-5010

HDR - WTNA JV
1001 BISHOP STREET
SUITE 400
HONOLULU, HAWAII 96813

MISAWA AIR BASE, JAPAN
DESC 20UX INSTALL ADDITIVE INJECTION SYSTEM

RAISED WALKWAY DETAILS

SHEET ID

A-503

FILE: DESSC20UX-A-503.dwg
DATE: 10/18/2021 3:26 PM
OPER:
SCALE:

IF SHEET IS LESS THAN 594 X 841 MM
REDUCED PRINT = USE GRAPHIC SCALES

RTA SUBMITTAL

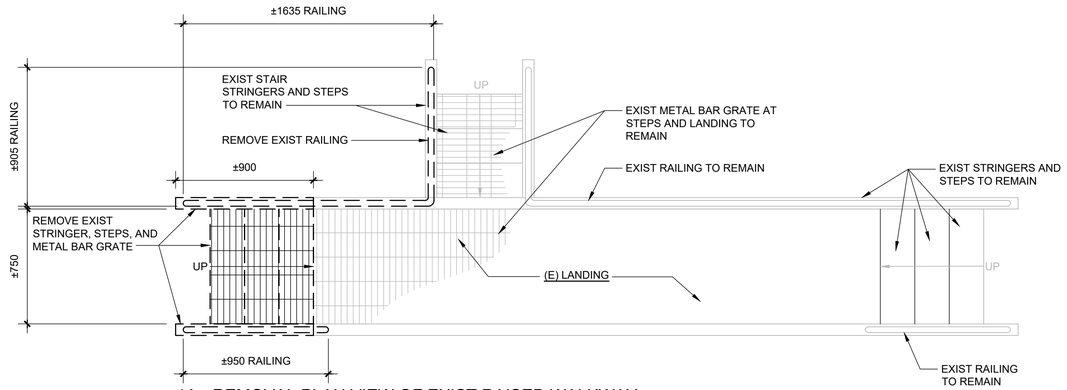

1A - REMOVAL PLAN VIEW OF EXIST RAISED WALKWAY

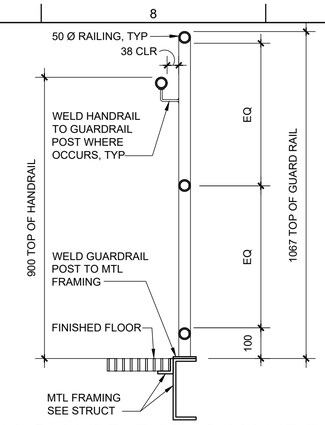

2 SECTION THRU GUARD RAIL & HANDRAIL

SCALE: 1:10

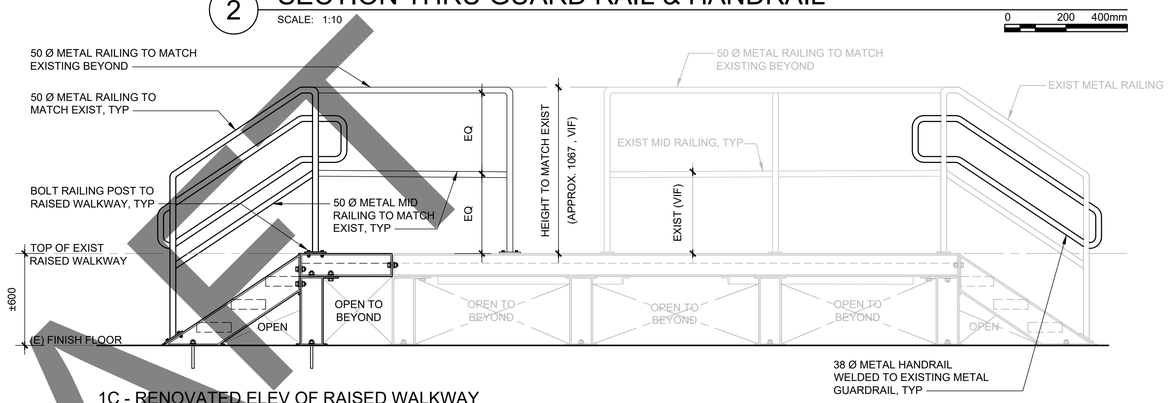

1C - RENOVATED ELEV OF RAISED WALKWAY

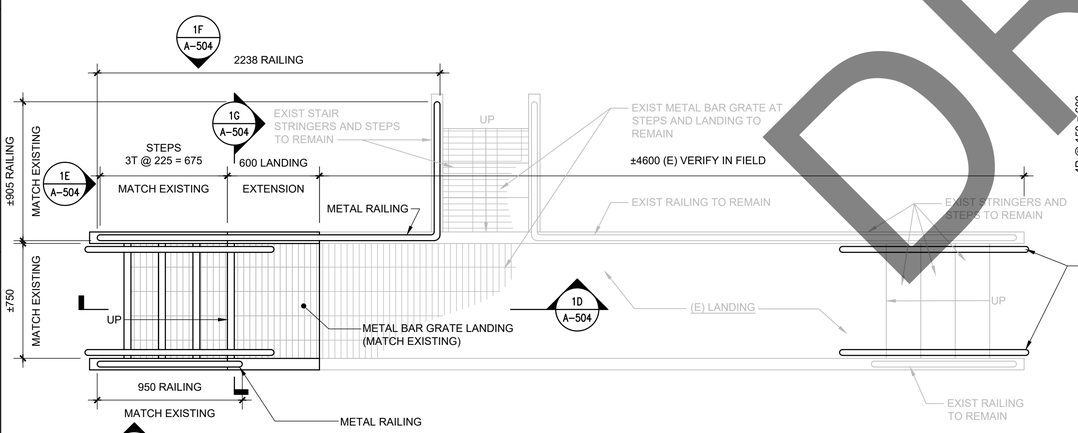

1B - RENOVATED PLAN VIEW OF EXIST RAISED WALKWAY

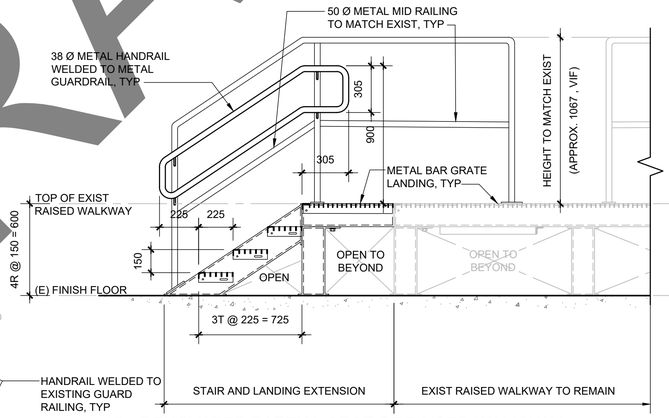

1D - RENOVATED PARTIAL SECT OF RAISED WALKWAY

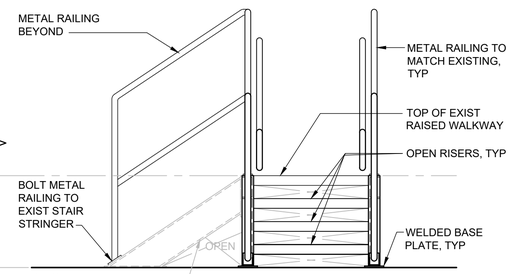

1E - RENOVATED ELEV OF RAISED WALKWAY

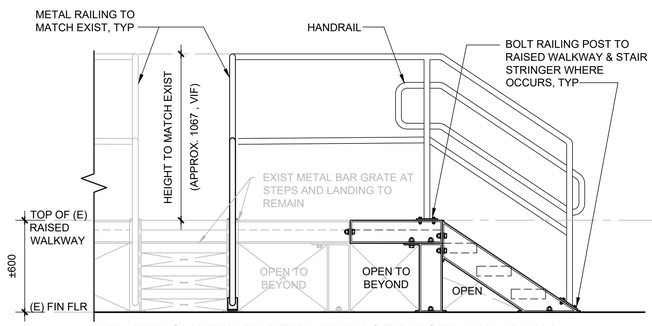

1F - RENOVATED PARTIAL ELEV OF RAISED WALKWAY

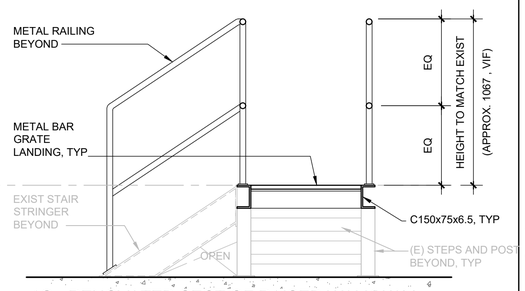

1G - RENOVATED SECT OF RAISED WALKWAY

NOTE:

1) METAL GRATING FOR LANDINGS AND STAIR TREADS MUST BE WELDED STEEL WITH BEARING BARS SPACED AT 30 AND CROSS BARS SPACED AT 100. BEARING BAR SIZE MUST BE 25x5. TREADS AND LANDINGS MUST HAVE CHECKERED PLATE NOSINGS. TREADS MUST BE FABRICATED WITH CARRIER PLATES AT ENDS.

2) ALL GRATINGS, STRINGERS, ANGLES, PLATES AND BOLTS MUST BE GALVANIZED AND PAINTED AS INDICATED.

1 EXIST RAISED WALKWAY DETAILS

SCALE: 1:20

0 500 1000mm

DRAFT

US Army Corps of Engineers®

MARK	DESCRIPTION	DATE

DESIGNED BY: S. ANTOLIN
DRAWN BY: S. ANTOLIN
CHECKED BY: W. NAKAMURA
SUBMITTED BY: W. NAKAMURA
SIZE: ISO A1
ISSUE DATE: FEBRUARY 2022
SOLICITATION NO.:
CONTRACT NO.: W912HV-17-D-0007
DRAWING CODE: -
FILE NAME: DESSC20UX-A-503.dwg

U.S. ARMY CORPS OF ENGINEERS
JAPAN DISTRICT
APO AP 96343-5010

HDR - WTNA JV
1001 BISHOP STREET
SUITE 400
HONOLULU, HAWAII 96813

MISAWA AIR BASE, JAPAN
DESC 20UX INSTALL ADDITIVE INJECTION SYSTEM

RAISED WALKWAY DETAILS

SHEET ID

A-504

FINISH NOTE:

1. ALL EXTERIOR COLORS SHALL BE IN ACCORDANCE WITH THE MISAWA AB EXTERIOR COLOR SCHEME.
2. PRODUCT NAMES AND NUMBERS OF MATERIALS AND FINISHES ARE INTENDED TO BE USED AS REFERENCES ONLY FOR QUALITY STANDARD, TEXTURE, AND COLOR. PRODUCTS OF OTHER MANUFACTURERS ARE ACCEPTABLE IF THE PRODUCT CONFORMS TO SPECIFIED REQUIREMENTS.

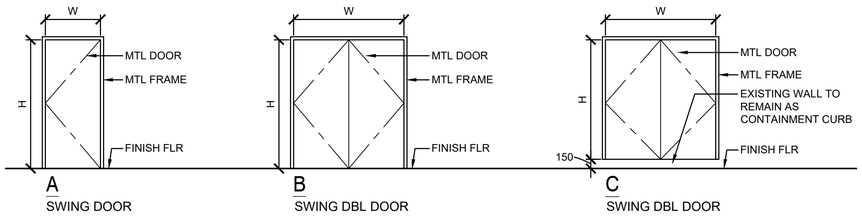

DOOR TYPES

NOT TO SCALE

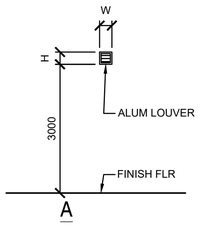

LOUVER TYPE

NOT TO SCALE

COLOR / MATERIAL FINISH INDEX

CODE/ REFERENCE	FINISH	MANUFACTURER	SIZE/PATTERN/STYLE/FINISH	COLOR	REMARKS
CONC FLR HARDENER	CONCRETE FLOOR HARDENER	-	-	CLEAR	-
PT-1	PAINT	FEDERAL COLOR/JPMA COLOR	-	BEIGE 22-85D	AS REGULATED (MATCH EXISTING)
PT-2	PAINT	FEDERAL COLOR/JPMA COLOR	-	BROWN 15-20B	AS REGULATED (MATCH EXISTING)
PT-3	PAINT	NIPPON PAINT	EAU DE GROSS	25-90A	-
PT-4	PAINT	FEDERAL COLOR/JPMA COLOR	-	GREEN 35-30B	AS REGULATED (MATCH EXISTING)
BASE	WALL BASE	TAJIMA	HEIGHT: 100	HB22	-

DOOR SCHEDULE

BUILDING	DOOR NO.	DOOR SIZE			DOOR				DETAILS			HW GROUP	FIRE RATING	REMARKS
		W	H	THK	TYPE	CONST (1)	DOOR FINISH (2)	FRAME (3)	HEAD	JAMB	THRESHOLD			
FIRE SPRINKLER	D/101	1120	2100	45	A	IMD	PT	MTL	1/A-601	1/A-601	3/A-601	HDWR-001	0	LOUVER DOOR
ELECTRICAL ROOM	D/102	1800	2100	45	B	IMD	PT	MTL	1/A-601	1/A-601	3/A-601	HDWR-002	0	LOUVER DOORS
EXISTING FILTER ROOM	D/103	2040*	2220*	45	C	IMD	MATCH	MTL	2/A-601	2/A-601	4/A-601	HDWR-002	0	

(1) DOOR CONSTRUCTION
IMD=INSULATED METAL DOOR
MTL=METAL

(2) DOOR FINISH
PT=PAINTED
MATCH=PAINT TO MATCH/MATCH EXISTING FINISH

(3) FRAME
MTL=METAL

*** DIMENSIONS OF DOOR TO BE VERIFIED AND COORDINATED WITH DOOR FRAME AND OPENING**

LOUVER SCHEDULE

BUILDING	LOUVER NO.	SIZE		TYPE	FRAME	DETAILS	FIRE RATING	REMARKS
		W	H					
FIRE SPRINKLER RISER ROOM	L/101	200	200	A	ALUM	3/A-503	0	
ELECTRICAL ROOM	L/102	200	200	A	ALUM	3/A-503	0	

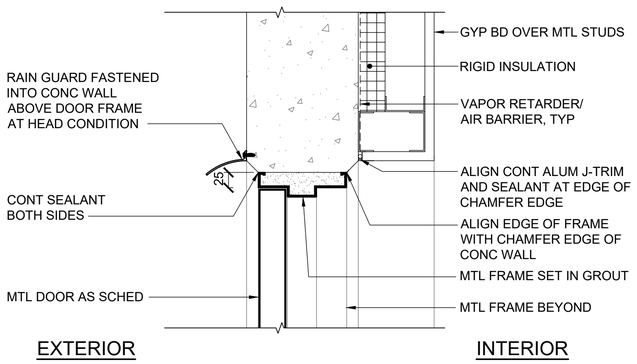

1 HEAD DETAIL (JAMB SIM)
SCALE: 1:5
0 100 200mm

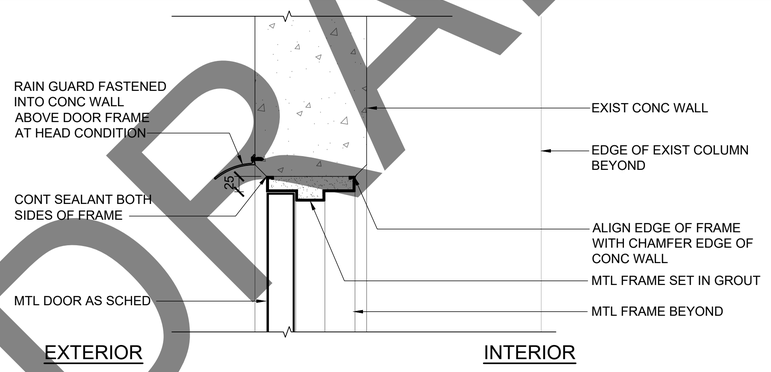

2 HEAD DETAIL (JAMB SIM)
SCALE: 1:5
0 100 200mm

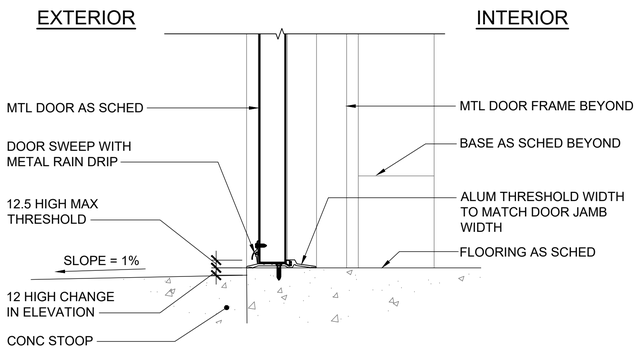

3 THRESHOLD DETAIL
SCALE: 1:5
0 100 200mm

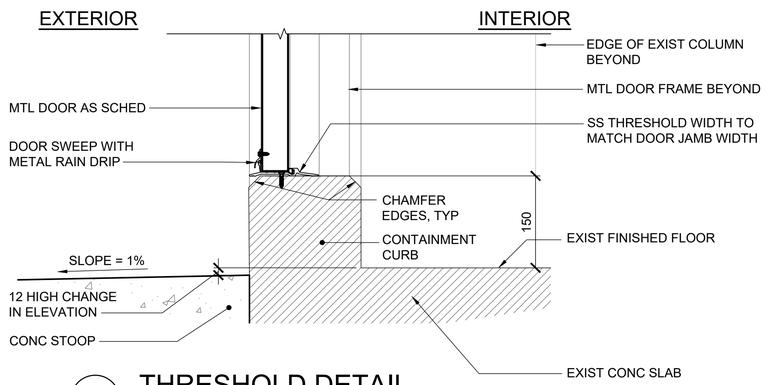

4 THRESHOLD DETAIL
SCALE: 1:5
0 100 200mm

DOOR HARDWARE SETS

THE FOLLOWING LOCKSET FUNCTIONS ARE ANSI CODES

HDWR-1 SINGLE DOOR AT FIRE SPRINKLER RISER ROOM - EXTERIOR

3 EACH	HINGES	A5311, NRP (114MM X 114MM)
1 EACH	LOCKSET	SERIES 4000, F86, GRADE 1, 626
1 EACH	CYLINDER	E09231 (MATCH EXISTING KEYING SYSTEM)
1 EACH	DOOR STOP	L02161, 626
1 EACH	DOOR CLOSER	C02011, ARM O, 630
1 EACH	OVERHEAD HOLDER	C02541, (SURFACE MOUNTED, STOP ONLY)
1 EACH	THRESHOLD	J35100 (AS DETAILED)
1 EACH	WEATHERSTRIPPING	ROE154, S88, BLACK
1 EACH	RAIN GUARD	AS DETAILED
1 EACH	EXTRUDED RETAINER	R3A534, 628

HDWR-2 DOUBLE DOORS AT ELECTRICAL ROOM & EXISTING FILTER SEPARATOR ROOM - EXTERIOR

6 EACH	HINGES	A5311, NRP (114MM X 114MM)
1 EACH	LOCKSET	SERIES 4000, F86, GRADE 1, 626
1 EACH	CYLINDER	E09231 (MATCH EXISTING KEYING SYSTEM)
2 EACH	DOOR STOP	L02161, 626
1 EACH	DOOR CLOSER	C02011, ARM O, 630
1 EACH	THRESHOLD	J35100 (AS DETAILED)
2 EACH	CONCEALED FLUSH BOLT	L04081, 626 (TOP & BOTTOM AT INACTIVE DOOR)
1 EACH	DUST PROOF STRIKE	L04021, 626
1 EACH	WEATHERSTRIPPING	ROE154, S88, BLACK
1 EACH	RAIN GUARD	AS DETAILED
1 EACH	EXTRUDED RETAINER	R3A534, 628

-- END OF HARDWARE SETS --

DRAFT

US Army Corps of Engineers®

MARK	DESCRIPTION	DATE

ISSUE DATE: FEBRUARY 2022
SOLICITATION NO.: -
CONTRACT NO.: W912HV-17-D-0007
DRAWING CODE: -
FILE NAME: DESSC20UX-A-601.dwg

DESIGNED BY: S. ANTOLIN
DRAWN BY: S. ANTOLIN
CHECKED BY: W. NAKAMURA
SUBMITTED BY: W. NAKAMURA
SIZE: ISO A1

U.S. ARMY CORPS OF ENGINEERS
JAPAN DISTRICT
APO AP 96343-5010

HDR - WTNA JV
1001 BISHOP STREET
SUITE 400
HONOLULU, HAWAII 96813

MISAWA AIR BASE, JAPAN
DESC 20UX INSTALL ADDITIVE INJECTION SYSTEM

SCHEDULE
-

SHEET ID
A-601

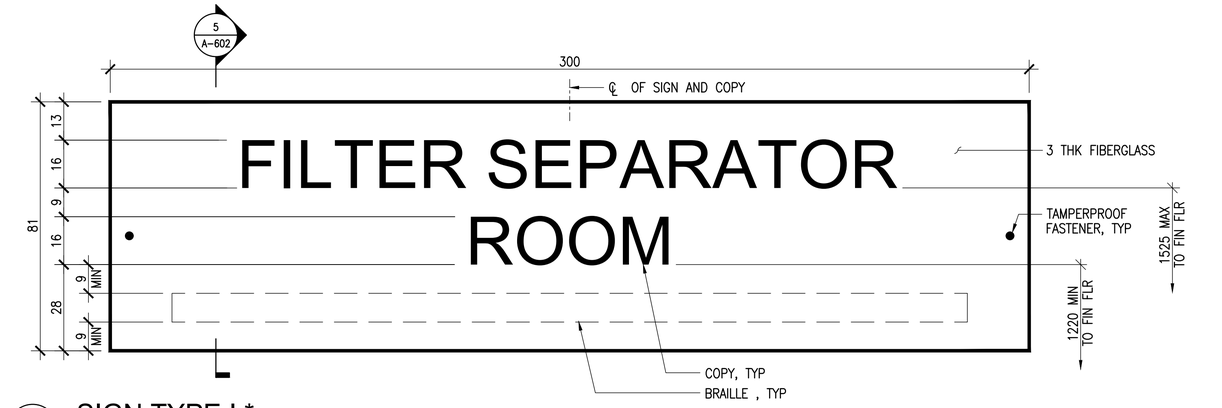

1 SIGN TYPE I *

SCALE: N.T.S.

0 200 400mm

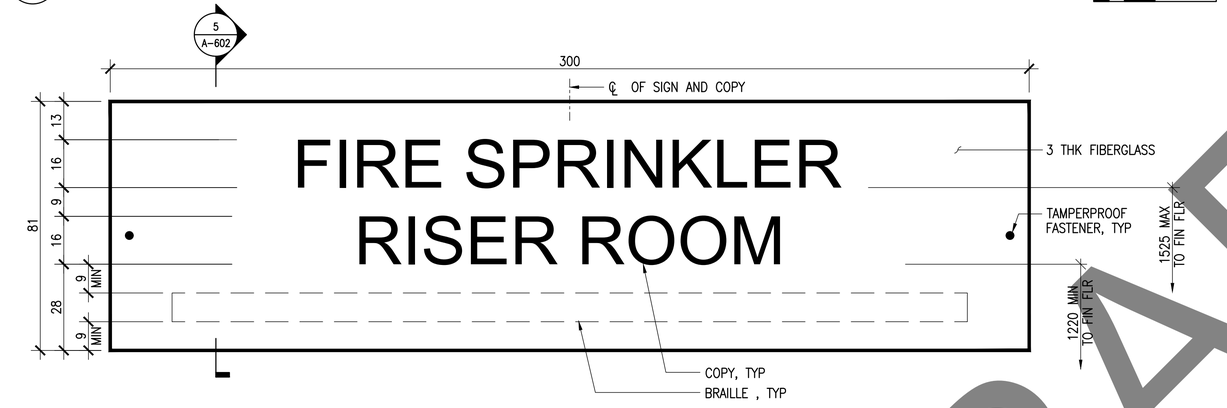

2 SIGN TYPE II *

SCALE: N.T.S.

0 200 400mm

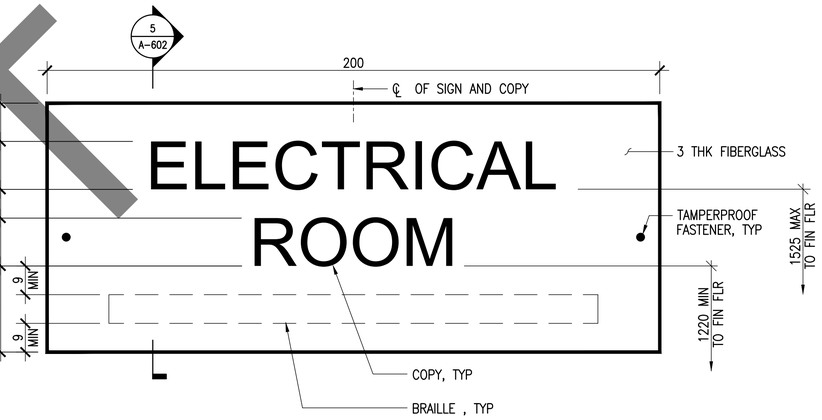

3 SIGN TYPE III *

SCALE: 1 : 1

0 20 40mm

VIEW OF EXISTING BUILDING FACILITY CONDITION

4 SIGN TYPE IV *

SCALE: N.T.S.

0 200 400mm

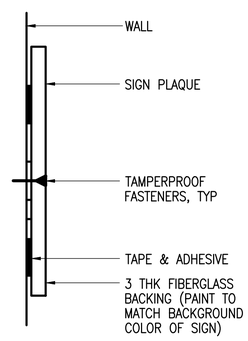

5 SECTION THRU SIGN

SCALE: 1 : 1

0 20 40mm

SIGNAGE SCHEDULE

ROOM	SIGN NO.	COPY/DESCRIPTION	SIGN TYPE	MATERIAL	TACTILE BRAILLE	REMARKS
FILTER SEPARATOR ROOM	1	FILTER SEPARATOR ROOM	I	FIBERGLASS	X	
FIRE SPRINKLER RISER ROOM	2	FIRE SPRINKLER RISER ROOM	II	FIBERGLASS	X	
ELECTRICAL ROOM	3	ELECTRICAL ROOM	III	FIBERGLASS	X	
PAINTED BUILDING NUMBER	4	1150	IV	PT-1		

* PAINTED FACILITY NUMBER TO MATCH EXISTING CONDITION ON NEW CONCRETE WALL SURFACE. COORDINATE MARKING LOCATIONS AND SIGN LOCATIONS WITH THE CONTRACTING OFFICER.

DRAFT

US Army Corps of Engineers®

MARK	DESCRIPTION	DATE

DESIGNED BY: S. ANTOLIN
DRAWN BY: S. ANTOLIN
CHECKED BY: W. NAKAMURA
SUBMITTED BY: W. NAKAMURA
SIZE: ISO A1
ISSUE DATE: FEBRUARY 2022
SOLICITATION NO.: -
CONTRACT NO.: W912HV-17-D-0007
DRAWING CODE: -
FILE NAME: DESSC20UX-A-602.dwg

U.S. ARMY CORPS OF ENGINEERS
JAPAN DISTRICT
APO AP 96343-5010

HDR - WTNA JV
1001 BISHOP STREET
SUITE 400
HONOLULU, HAWAII 96813

MISAWA AIR BASE, JAPAN
DESC 20UX INSTALL ADDITIVE INJECTION SYSTEM

SIGN SCHEDULE & DETAILS
-

SHEET ID
A-602

THE FOLLOWING NOTES APPLY TO FILTER BUILDING TWO ROOMS ADDITION, SDA AND CI/LI CANOPY AND EQUIPMENT PADS, PIPE SUPPORT PIER, OTHER PADS AND PLATFORM CONNECTION.

A. GENERAL NOTES

1. METHODS, PROCEDURE AND SEQUENCES OF CONSTRUCTION ARE THE RESPONSIBILITY OF THE CONTRACTOR. THE CONTRACTOR IS RESPONSIBLE FOR IDENTIFYING AND IMPLEMENTING THE NECESSARY PRECAUTIONS TO MAINTAIN AND ENSURE THE INTEGRITY OF THE STRUCTURE AT ALL STAGES OF CONSTRUCTION.

2. TEMPORARY BRACING, SHEETING, SHORING, ETC. REQUIRED TO ENSURE THE STRUCTURAL INTEGRITY / STABILITY OF THE EXISTING BUILDINGS, SIDEWALKS, UTILITIES, ETC. DURING CONSTRUCTION IS THE RESPONSIBILITY OF THE CONTRACTOR AND SHALL BE DESIGNED BY REGISTERED PROFESSIONAL ENGINEER EMPLOYED BY THE CONTRACTOR.

3. IMPLEMENTATION OF JOB SITE SAFETY IS THE SOLE RESPONSIBILITY OF THE CONTRACTOR.

4. SLEEVES OR BLOCK-OUTS REQUIRED FOR PASSAGE OF DUCTWORKS, PIPING, DRAINS, CONDUITS, ETC., IN ADDITION TO ANCHORS AND HANGERS REQUIRED FOR EQUIPMENT AND PIPING AND UNDER-SLAB UTILITIES ARE NOT SPECIFICALLY, NOR GENERALLY, INDICATED ON THE STRUCTURAL DRAWINGS. THE CONTRACTOR IS RESPONSIBLE FOR DETERMINING SUCH REQUIREMENTS PRIOR TO FABRICATION OR ERECTION OF THE STRUCTURES. PENETRATIONS ARE SUBJECT TO APPROVAL BY THE CONTRACTING OFFICER.

5. DIMENSIONS AND INSTALLATION DETAILS OF PURCHASED EQUIPMENT MUST BE VERIFIED AND COORDINATED WITH THE SUPPORTING STRUCTURE. THE CONTRACTOR IS RESPONSIBLE FOR DETERMINING SUCH REQUIREMENTS FROM SUBCONTRACTORS AND EQUIPMENT SUPPLIERS ALONG WITH COORDINATING THE LOCATIONS AND DETAILS FOR THESE ITEMS PRIOR TO FABRICATION OR ERECTION OF THE SUPPORTING STRUCTURE. ANY CONFLICTS BETWEEN THESE ITEMS AND THE BUILDING STRUCTURE ARE TO BE BROUGHT TO THE ATTENTION OF THE CONTRACTING OFFICER FOR RESOLUTIONS.

6. THE STRUCTURAL DRAWINGS GOVERN THE WORK FOR STRUCTURAL FEATURES, UNLESS OTHERWISE NOTED. DIMENSIONS SHOWN ON PLANS AND DETAILS ARE TO GOVERN THE STRUCTURAL WORK.

7. IN CASE OF CONFLICT BETWEEN THE GENERAL NOTES, SPECIFICATIONS, AND DRAWINGS, NOTIFY CONTRACTING OFFICER.

8. WORK NOT INDICATED ON A PART OF THE DRAWINGS, BUT REASONABLY IMPLIED TO BE SIMILAR TO THAT SHOWN AT CORRESPONDING LOCATION, IS TO BE REPEATED.

B. FOUNDATIONS

1. FOUNDATIONS ARE TO BE CONSTRUCTED IN ACCORDANCE WITH TOPOGRAPHIC SURVEY COORDINATE IN JAPAN GEODETIC DATUM (JGC) 2011, ZONE 10. FOUNDATION DESIGN IS BASED ON RECOMMENDATION INCLUDED IN THE GEOTECHNICAL REPORT PREPARED FOR THIS PROJECT BY ENVIRONMENTAL SCIENCE CORPORATION, DATED 18 DECEMBER 2020.

2. PRIOR TO PLACING CONCRETE, ANY WATER PRESENT IS TO BE PUMPED OUT FROM THE BOTTOM OF EXCAVATIONS TO LEVEL APPROVED BY THE CONTRACTING OFFICER.

3. CONCRETE SLAB-ON-GRADE HAS BEEN DESIGNED TO BEAR ON PROPERLY COMPACTED SUB-GRADE SOILS AS PER THE DESIGN CRITERIA. THE SUB-BASE MATERIAL BENEATH THE SLAB-ON-GRADE IS TO CONFORM TO JIS A 5001 AND BE COMPACATED TO 95% PER JIS A 1210 (METHODS C, D OR E), COMPACTED LIFT THICKNESS = 150 MM.

4. COORDINATE SLAB-ON-GRADE PENETRATIONS AND MECH / ELEC REQUIREMENTS WITH MECH / ELEC / PLUMBING DRAWING SHEETS.

5. FOOTINGS SHALL BE CONCENTRIC WITH BASE OF WALL. SEE DETAILS FOR OFFSETS WHERE THEY OCCUR UNLESS OTHERWISE NOTED.

6. WHERE SUBGRADE OF NATIVE ELASTIC SILT SOILS IS REQUIRED TO BE COMPACTED, MOISTURE CONDITIONING SHALL BE PROVIDED, AS NEEDED, TO ACHIEVE THE SPECIFIED 90% COMPACTION PER JIS A 1210 (METHODS C, D OR E).

7. PROVIDE A MINIMUM 1.00 METER OVERCAVATION OF EXISTING SUBGRADE AND REPLACE WITH ENGINEERED GRANURAL FILL OF ALL FOUNDATION SUPPORT.

C. REINFORCED CONCRETE

1. REINFORCED CONCRETE WORK IS TO BE IN ACCORDANCE WITH THE AMERICAN CONCRETE INSTITUTE, ACI 318-14, "BUILDING CODE REQUIREMENTS FOR STRUCTURAL CONCRETE".

2. MIXING, TRANSPORTING, PLACING AND TESTING OF CONCRETE IS TO BE DONE IN ACCORDANCE WITH ACI 301-16.

3. ALL CAST IN PLACE CONCRETE SHALL HAVE A MINIMUM 28 DAY COMPRESSIVE STRENGTH OF 36 MPa FOR BEAMS, WALLS, SLAB ON GRADE, PADS AND WALL FOOTINGS. LEVELING CONCRETE SHALL BE 24 MPa. ALL CONCRETE SHALL ALSO CONFORM TO THE REQUIREMENT SPECIFIED IN JIS A1116 FOR NORMAL WEIGHT CONCRETE.

4. THE SLUMP IS NOT TO EXCEED 210 MM FOR 36 MPa PER JASS 5 SECTION 3.6 AND THE MAXIMUM WATER/CEMENT RATIO SHALL BE 0.50 AS SPECIFIED IN SECTION 7 OF JAPAN DISTRICT DESIGN GUIDE. FOR A DESIRED PUMPING FLUIDITY, A SUPERPLASTICIZER ADMIXTURE MAY BE ADDED.

5. AIR ENTRAINMENT : 5% TO 7% IN CONCRETE EXPOSED TO FREEZE / THAW. CONCRETE TO BE NORMAL WEIGHT CONCRETE (2,403 KG/M ^{3}) WITH CEMENT CONFORMING TO ASTM 150, TYPE I, STEEL TROWEL FINISH SHALL BE APPLIED AS SHOWN IN ARCH DRAWING.

6. DEFORMED REINFORCEMENT SHALL CONFORM TO ASTM A 615/615M : FOR D10 TO D16 GRADE 40 OR JIS G3112 (SD295) AND D19 OR LARGER, GRADE 50 OR JIS G3112 (SD345). THE MINIMUM BAR SIZE D13 BAR, EXCEPT FOR STIRRUPS AND TIES WHICH MAY BE D10 BAR PER ACI.

7. REINFORCEMENT IS TO BE DETAILED, FABRICATED, AND PLACED IN ACCORDANCE WITH THE ACI " DETAILING MANUAL (SP-66) LATEST EDITION.

8. PROVIDE ADEQUATE CONCRETE COVER IN ACCORDANCE WITH REQUIREMENTS AS SET FORTH BY ACI 318, LATEST EDITION.

9. REINFORCEMENT IS TO BE SECURELY HELD IN PLACE WHILE PLACING CONCRETE, IF REQUIRED, ADDITIONAL BARS, STIRRUPS, OR CHAIRS WILL FURNISHED TO SUPPORT AND KEEP REINFORCEMENT IN PLACE PER DESIGN.

10. CONTINUOUS REINFORCING BARS TO BE TURNED AND LAPPED AT CORNERS AND INTERSECTIONS OF WALLS AND FOOTINGS : USE CLASS B TENSION SPLICES PER ACI 318 FOR LAP SPLICES. FOR HOOK BARS USE STANDARD ACI HOOKS, UNLESS OTHERWISE NOTED.

11. CONTINUOUS TOP BARS TO BE SPLICED AT MID-SPAN. CONTINUOUS BOTTOM BARS TO BE SPLICED AT CENTERLINE SUPPORTS (OR AS SHOWN ON DETAILS).

12. THE LENGTH TO WIDTH RATIO OF SINGLE SLAB POUR IS NOT TO EXCEED 1:1.25 to 1:1.5 OR 3.5 M WITHOUT INTERMEDIATE SAW CUT. CONTROL JOINTS TO BE MADE WITHIN 24 HOURS OF SLAB POURS. SLAB JOINTS ARE TO BE LOCATED AND SPACED AS SHOWN ON THE DRAWINGS. SLAB POURED ON 0.381 MM (15 MIL) POLYETHYLENE VAPOR BARRIER AND 150 MM CAPILLARY WATER BARRIER MUST CONFORM TO ASTM C33 OR JIS A 5005.

13. CONCRETE SLABS TO BE CURED BY METHOD COMPATIBLE WITH SPECIFIED FLOOR FINISH WHERE ACCEPTABLE, USE A LIQUID MEMBRANE CURING COMPOUND AT THE MANUFACTURER'S RECOMMEND COVERAGE. SAW JOINTS TO BE CUT AS SOON AS POSSIBLE WITHOUT RAVELLING THE SURFACE.

14. SLAB ON GRADE CONSTRUCTION JOINTS TO BE PLACED AT EQUAL INTERVALS IN EACH DIRECTIONS AS INDICATED ON THE DRAWING PLANS

15. LEVELING GROUT TO BE NON-SHRINK, NON-METALLIC TYPE, FACTORY PREMIXED GROUT IN ACCORDANCE WITH ASTM C 1107, HAVING A MINIMUM COMPRESSIVE STRENGTH OF NOT LESS THAN 36 MPa.

16. PROVIDE FINISHED SLAB-ON-GRADE WITH OVERALL VALUES OF FLATNESS F(F) = 35 AND LEVELNESS F(L) = 25 ALONG WITH LOCAL VALUE OF FLATNESS F(S) = 24 AND LEVELNESS F(L) = 17.

17. SLEEVES, INSERTS, MECHANICAL OPENINGS, CONDUITS, PIPES, RECESSES, DEPRESSIONS, CURBS AND OTHER EMBEDDED ITEMS TO BE PROVIDED FOR AS SHOWN ON THE ARCHITECTURAL, MECHANICAL AND ELECTRICAL DRAWINGS AND AS REQUIRED BY EQUIPMENT MANUFACTURERS' INSTALLATION OF THESE ITEMS IS TO BE COORDINATED AND PROVIDED FOR, PRIOR TO PLACING CONCRETE.

18. PROVIDE BLOCK-OUTS AS REQUIRED FOR PRE-CAST CONCRETE PANEL ANCHORAGE FILL WITH CONCRETE ONCE PANEL IS IN PLACE.

19. ANCHOR RODS TO BE ASTM F 1554 OR JIS B 1220, FY = 250 MPa MINIMUM, GALVANIZED.

20. EXPANSION JOINT FILLER SHALL BE PREFORMED MATERIAL CONFORMING TO ASTM D1751 OR ASTM D1752, UNLESS OTHERWISE INDICATED. FILLER MATERIAL SHALL BE 10 MM THICK AND OF A WIDTH APPLICABLE FOR JOINT FORMED. EXPANSION AND CONTRACTION JOINT SEALANT SHALL BE PREFORMED POLYCHLOROPRENE ELASTOMERIC TYPE ASTM D2628. JOINT SEALANT SHALL BE APPLIED AS RECOMMENDED BY THE MANUFACTURER OF THE SEALANT.

D. STRUCTURAL STEEL

1. DESIGN CODE : AISC STEEL CONSTRUCTION MANUAL (AISC 360-16) 14TH EDITION

2. MATERIAL STRENGTHS :

A.	STRUCTURAL STEEL ROLLED SHAPES	ASTM A36	OR	JIS G 3136	325 MPa
B.	MISCELLANEOUS PLATES AND BAR	ASTM A36	OR	JIS G 3106	235 MPa
C.	STRUCTURAL SQUARE STEEL TUBES	ASTM A500, GR. 50	OR	JIS G 3466	345 MPa
D.	HIGH STRENGTH BOLTS	ASTM A325	OR	JIS B 1186	660 MPa
E.	ANCHOR RODS	ASTM F 1554, GR. 36	OR	JIS B 1220	250 MPa
F.	WELDS (E70XXELECTRODES)	AWS D1.1, D1.8	OR	JIS Z 3212	480 MPa

3. STRUCTURAL STEEL SHALL BE FABRICATED IN ACCORDANCE WITH THE AMERICAN INSTITUTE OF STEEL CONSTRUCTION (AISC). STEEL ERECTION SHALL BE IN ACCORDANCE WITH THE REQUIREMENTS OF THE AISC AND THE OSHA STEEL ERECTION STANDARD, 29 CPR APT 1926, SUBPART R-STEEL ERECTION, EFFECTIVE DATE JANUARY 18, 2002.

4. STRUCTURAL STEEL, UNO, TO BE NEW STEEL CONFORMING TO THE REQUIREMENTS OF ASTM A6/6M OR JIS G 3136.

5. THE STRUCTURAL STEEL FABRICATOR, AND/OR GENERAL CONTRACTOR, MUST VERIFY ALL EXISTING DIMENSIONS AND CONDITIONS AT THE SITE. ALL DISCREPANCIES FOUND ARE TO BE REPORTED TO THE CONTRACTING OFFICER PRIOR TO PREPARATION OF SHOP DRAWINGS. SHOP DRAWINGS ARE TO INCLUDE ALL FIELD MEASUREMENTS AND CONDITIONS.

6. STRUCTURAL STEEL FABRICATOR IS TO PROVIDE FOR VERTICAL AND HORIZONTAL FIELD ADJUSTMENT OF ALL SUPPORT ASSEMBLIES.

7. CUTS, HOLES, COPING, ETC. REQUIRED FOR OTHER TRADES MUST BE SHOWN ON THE SHOP DRAWINGS AND MADE IN THE SHOP. CUTS OR BURNING OF HOLES IN THE FIELD WILL NOT BE PERMITTED.

8. ERECTION AIDS SHALL NOT BE VISIBLE IN THE FINISHED CONSTRUCTION UNLESS STEEL IS ALLOWED TO BE EXPOSED. REMOVAL OF ERECTION AIDS FOR ANY REASON SHALL BE THE RESPONSIBILITY OF THE CONTRACTOR.

9. CONTRACTOR SHALL BE RESPONSIBLE FOR ALL ERECTION AIDS AND JOINT PREPARATION THAT INCLUDE BUT ARE NOT LIMITED TO : ERECTION ANGLES, LIFT HOLES, ACCESS HOLES AND OTHER AIDS, WELDING PROCEDURES, REQUIRED ROOT OPENINGS, ROOT FACE DIMENSIONS, GROOVE ANGLES, BACKING BARS, BACKING RINGS, COPES AND TRANSITION TAPERS OF UNEQUAL PARTS.

10. BOLTED CONNECTIONS TO BE MADE ACCORDING TO AISC TABLE II OR III FRAMED BEAM CONNECTIONS. THE MINIMUM DEPTH OF THE CONNECTION MUST BE MORE THAN 75% OF THE BEAM DEPTH EXCEPT THAT BEAMS FRAMING TO COLUMNS TO HAVE FULL DEPTH CONNECTIONS USING 10MM MINIMUM CONNECTION ANGLES OR PLATES. COMPRESSIBLE-WASHER-TYPE DIRECT TENSION INDICATORS OR TWIST-OFF-TYPE TENSION-CONTROL BOLTS / NUTS CONFORMING TO RCSC SHALL BE USED.

A. NON-COMPOSITE BEAM CONNECTIONS TO BE DESIGNED FOR ONE-HALF THE UNIFORM LOAD CAPACITY OF THE BEAM AS TABULATED BY AISC UNLESS HIGHER LOADS ARE INDICATED ON THE DRAWINGS.

11. STRUCTURAL STEEL CONNECTIONS TO BE SHOP WELDED AND FIELD BOLTED.

12. SUBSTITUTION OF EXPANSION ANCHORS FOR EMBEDDED ANCHORS SHOWN ON THE DRAWINGS WILL NOT BE PERMITTED.

13. WELDING TO BE IN ACCORDANCE WITH THE AMERICAN WELDING SOCIETY (AWS) "STRUCTURAL WELDING CODE-ANSI / AWS D1.1 / D1.1M" (LATEST EDITION). USE E70XX ELECTRODES UNLESS OTHERWISE INDICATED ON THE DRAWINGS.

14. MANUFACTURERS' STEEL GRATING IN ACCORDANCE WITH THE "METAL BAR GRATING MANUAL" AS PUBLISHED BY THE NATIONAL ASSOCIATION OF ARCHITECTURAL METAL MANUFACTURER, LATEST EDITION. STEEL FOR GRATING TO CONFORM TO ASTM A 1011 / A1011M.

15. STRUCTURAL STEEL TO BE PAINTED PER SPECIFICATIONS, UNO.

E. ABBREVIATIONS

CJ	CONTROL JOINT
DN	DOWN
EL	ELEVATION
FFL	FINISH FLOOR LINE
RB	ROOF BEAM
TOS	TOP OF SLAB
TYP	TYPICAL
W	WALL
WF	WALL FOOTING

DESIGN LOADS

THE STRUCTURE ARE DESIGNED IN ACCORDANCE WITH THE REQUIREMENTS OF ASCE /SEI 7-16 "MINIMUM DESIGN LOADS AND ASSOCIATED CRITERIA FOR BUILDINGS AND OTHER STRUCTURES AND UFC 3-301-01 "STRUCTURAL ENGINEERING, 2019". ENVIRONMENTAL LOADS ARE TO BE DETERMINED BASED ON RISK CATEGORY III.

1. DEAD LOADS

DEAD LOADS ARE GRAVITY LOADS THAT CONSIST OF SELF-WEIGHT OF THE BUILDING STRUCTURES, AND SUPERIMPOSED DEAD LOADS INCLUDING ALL NON-COMPONENTS, PERMANENTLY ATTACHED EQUIPMENT,MATERIALS AND FINISHES

a.	ROOFING	0.05 KN/M ^{2} (1 PSF)
b.	ROOF INSULATIONS	0.05 KN/M ^{2} (2 PSF)
c.	WALL INSULATIONS	0.10 KN/M ^{2} (2 PSF)
d.	ELECTRICAL	0.05 KN/M ^{2} (2 PSF)
e.	MECHANICAL	0.24 KN/M ^{2} (5 PSF)
f.	MISCELLANEOUS	0.24 KN/M ^{2} (5 PSF)

2. LIVE LOADS

LIVE LOADS ARE VARIABLE GRAVITY LOADS RESULTING FROM USE AND OCCUPANCY OF THE BUILDING. LIVE LOADS FOR VARIOUS USES AS PRESCRIBED BY ASCE 7-16 , IBC 2018 AND UFC 3-301-01.

a.	ROOF LIVE LOADS	1.00 KN/M ^{2} (20 PSF)
b.	ELECTRICAL ROOM	10.00 KN/M ^{2} (200 PSF)
c.	FIRE SPRINKLER RISER ROOM	10.00 KN/M ^{2} (200 PSF)
d.	STOOP	5.00 KN/M ^{2} (100 PSF)

3. SNOW LOADS

SNOW LOADS SHALL BE DETERMINED BASED ON THE PROCEDURES OF ASCE 7-16 CHAPTER 7 AND GROUND SNOW LOAD IS PER WBDG STRUCTURAL DATA TOOLS FOR UFC 3-301-01.

a.	GROUND SNOW LOADS	2.78 KN/M ^{2} (58 PSF)
b.	MAXIMUM FROST PENETRATION	762 MM (30 INCHES)

4. WIND LOADS

WIND LOADS SHALL BE DETERMINED BASED ON THE PROCEDURES OF ASCE 7-16 CHAPTER 27 DIRECTIONAL METHOD FOR THE MAIN WIND FORCE RESISTING SYSTEM (MWFRS). WIND SPEED BASED IN WBDG STRUCTURAL LOAD DATA TOOL FOR UFC 3-301-01.

a.	WIND SPEED, 3 SECOND GUST	206 KPH (128 MPH)
b.	RISK CATEGORY	III
c.	EXPOSURE CATEGORY	C
d.	HEIGHT OF BUILDING	3.735 M (12.25 FEET)
e.	EXPOSURE COEFFICIENT, Kz	1.08
f.	TOPOGRAPHIC FACTOR, Kzt	1.00
g.	WIND DIRECTIONALITY FACTOR, K_d	0.85
h.	GUST EFFECT FACTOR, G	0.85
i.	INTERNAL PRESSURE COEFFICIENT, GCpi (BUILDING ENCLOSED)	0.18

5. SEISMIC LOADS

SEISMIC LOADS ARE DETERMINED BY EQUIVALENT LATERAL PROCEDURE OF ASCE 7-16 CHAPTER 11 TO CHAPTER 13. THE MAPPED SITE ACCELERATION ARE DETERMINED FROM WBDG STRUCTURAL LOAD DATA TOOLS FOR UFC 3-301-01.

a.	BUILDING CODE REFERENCE	ASCE 7-16
b.	LOCATION	MISAWA AIR BASE, JAPAN
c.	SITE SOIL CLASSIFICATION	SITE CLASS D STIFF SOIL
d.	RISK CATEGORY	III
e.	DESIGN SPECTRAL ACCELERATION FOR SHORT PERIOD, S_S	1.30g
f.	DESIGN SPECTRAL ACCELERATIONS FOR 1-SEC PERIOD, S_1	0.69 g
g.	SEISMIC DESIGN CATEGORY	D

6. SOIL BEARING CAPACITY

FOUNDATION DESIGN WILL BE BASED ON THE FOLLOWING PARAMETERS:

a.	SOIL BEARING CAPACITY OF FOUNDATION	50 kN/M ^{2} (1,044 PSF)
b.	MODULUS OF SUB-GRADE REACTION, K	40 MN/MM ^{3}(147 PCI)
c.	DEPTH OF FOOTING BELOW FINISH GRADE LINE	1.00 METERS (3.28 FEET)
d.	COEFFICIENT OF FRICTION	0.50
e.	ACTIVE LATERAL EARTH PRESSURE	9 kN/M ^{3}(64 PCF)

DRAFT

US Army Corps of Engineers ©

MARK	DESCRIPTION	DATE

DESIGNED BY: T.MIHORI
DRAWN BY: J.INOCENCIO
CHECKED BY: T.HATTORI
SUBMITTED BY: T.MIHORI
SIZE: ISO A1
FILE NAME: DESC20UX_S-001
ISSUE DATE: FEBRUARY 2022
SOLICITATION NO.:
CONTRACT NO.: W912HV-17-D007
DRAWING CODE: -

U.S. ARMY CORPS OF ENGINEERS
JAPAN DISTRICT
APO AP 96343-5010

HDR - WTNA JV
1001 BISHOP STREET
SUITE 400
HONOLULU, HAWAII 96813

MISAWA AIR BASE, JAPAN
DESC 20UX INSTALL ADDITIVE INJECTION SYSTEM

FILTER BUILDING
GENERAL NOTES AND DESIGN CRITERIA

SHEET ID
S-001

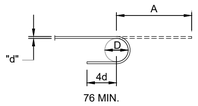

STANDARD HOOK 180°

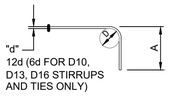

BAR BEND 90°

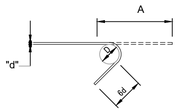

BAR BEND 135°

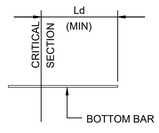

BOTTOM BARS

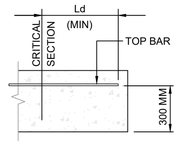

TOP BARS

MINIMUM EXTENSION LENGTHS "A"								
BAR SIZE	STANDARD HOOKS				TIES AND STIRRUPS			
JIS	180° HOOKS		90° HOOKS		90° HOOKS		135° HOOKS	
	(MM)	(INCH)	(MM)	(INCH)	(MM)	(INCH)	(MM)	(INCH)
D10	125	5	150	6	105	4	105	4
D13	150	6	200	8	115	5	115	5
D16	175	7	250	10	155	6	150	6
D19	200	8	300	12	305	12	205	8
D22	250	10	375	15	NA	NA	NA	NA
D25	275	11	425	17	NA	NA	NA	NA
D29	375	15	475	19	NA	NA	NA	NA
D32	425	17	550	22	NA	NA	NA	NA

DEVELOPMENT LENGTH				
BAR SIZE	Ld			
JIS	TOP BARS		OTHERS	
	(MM)	(INCH)	(MM)	(INCH)
D10	493	19.42	379	14.92
D13	592	23.31	455	17.93
D16	789	31.07	607	23.90
D19	937	36.90	721	28.39
D22	1357	53.41	1044	41.08
D25	1542	60.69	1186	46.69
D28	1727	67.98	1328	52.29
D32	1973	77.69	1518	59.76

NOTES:
1. THE VALUES ABOVE ARE CALCULATED BASED ON THE FOLLOWING:
   Ld = DEVELOPMENT LENGTH FOR DEFORMED BARS PER ACI 318 - 08
   CONCRETE STRENGHT AT 28 DAYS ———— f'c = 27.5 MPa (4,000PSI)
   REINFORCING BAR YIELD STRENGHT ———— Fy = 420 MPa (60,000 PSI)
2. THE BARS ARE UNCOATED AND DEFORMED.
3. ALL DEVELOPMENT LENGTH SHALL BE THE MINIMUM AS TABULATED ABOVE UNLESS OTHERWISE NOTED OR SHOWN IN THE DRAWINGS.

1 TYPICAL BAR BENDING
SCALE: NOT TO SCALE

2 DEVELOPMENT LENGTH WITHOUT HOOK
SCALE: NOT TO SCALE

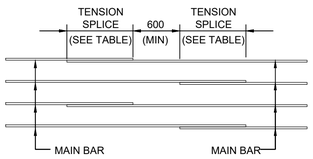

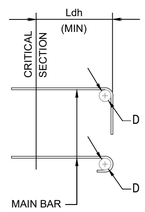

BAR SIZE	TOP BARS				OTHERS			
	CLASS A		CLASS B		CLASS A		CLASS B	
JIS	1.0 x Ld		1.3 x Ld		1.0 x Ld		1.3 x Ld	
	(MM)	(INCH)	(MM)	(INCH)	(MM)	(INCH)	(MM)	(INCH)
D10	493	19.42	641	25.25	379	14.92	493	19.42
D13	592	23.31	770	30.30	455	17.93	592	23.31
D16	789	31.07	1026	40.40	607	23.90	789	31.07
D19	937	36.90	1218	47.97	721	28.39	937	36.90
D22	1357	53.41	1764	69.43	1044	41.08	1357	53.41
D25	1542	60.69	2004	78.90	1186	46.69	1542	60.69

BAR SIZE	DEVELOPMENT LENGTH	
JIS	Ldh	
	(MM)	(INCH)
D10	190	7.47
D13	228	8.98
D16	304	11.95
D19	360	14.19
D22	417	16.43
D25	474	18.67

NOTES:
1. THE VALUES ABOVE ARE CALCULATED BASED ON THE FOLLOWING:
   Ld = DEVELOPMENT LENGTH FOR DEFORMED BARS PER ACI 318 - 08
   CONCRETE STRENGHT AT 28 DAYS ———— f'c = 27.5 MPa (4,000PSI)
   REINFORCING BAR YIELD STRENGHT ———— Fy = 420 MPa (60,000 PSI)
2. THE BARS ARE UNCOATED AND DEFORMED.
3. ALL DEVELOPMENT LENGTH SHALL BE THE MINIMUM AS TABULATED ABOVE UNLESS OTHERWISE NOTED OR SHOWN IN THE DRAWINGS.

3 LAP SPLICE IN TENSION
SCALE: NOT TO SCALE

4 DEVELOPMENT LENGTH HOOK
SCALE: NOT TO SCALE

BAR SIZE	Ldc	
JIS	(MM)	(INCH)
D10	493	19.42
D13	592	23.31
D16	789	31.07
D19	937	36.90
D22	1357	53.41
D25	1542	60.69

NOTES:
1. ALL LAP SPLICES SHALL BE CLASS B SPLICES, EXCEPT CLASS A ARE ALLOWED WHEN ONE-HALF OR LESS REINFORCEMENT ARE SPLICED WITHIN THE REQUIRED LAP LENGTH.
2. LAP SPLICES SHALL BE STAGGERED AT LEAST 600.MM.
3. ALL LAP SPLICES SHALL BE THE MINIMUM AS TABULATED BELOW UNLESS OTHERWISE NOTED OR SHOWN IN THE DRAWINGS.

5 LAP SPLICE IN COMPRESSION
SCALE: NOT TO SCALE

DRAFT

US Army Corps of Engineers®

MARK	DESCRIPTION	DATE

DESIGNED BY: T.MIHORI
DRAWN BY: J.LAGUNCIO
CHECKED BY: T.HATTORI
SUBMITTED BY: T.MIHORI
SIZE: ISO A1
ISSUE DATE: FEBRUARY 2022
SOLICITATION NO.: -
CONTRACT NO.: W912HV-17-D007
DRAWING CODE: -
FILE NAME: DESC20UX_S-501

U.S. ARMY CORPS OF ENGINEERS
JAPAN DISTRICT
APO AP 96343-5010

HDR - WTNA JV
1001 BISHOP STREET
SUITE 400
HONOLULU, HAWAII 96813

MISAWA AIR BASE, JAPAN
DESC 20UX INSTALL ADDITIVE INJECTION SYSTEM

TYPICAL DETAILS

SHEET ID
S-002

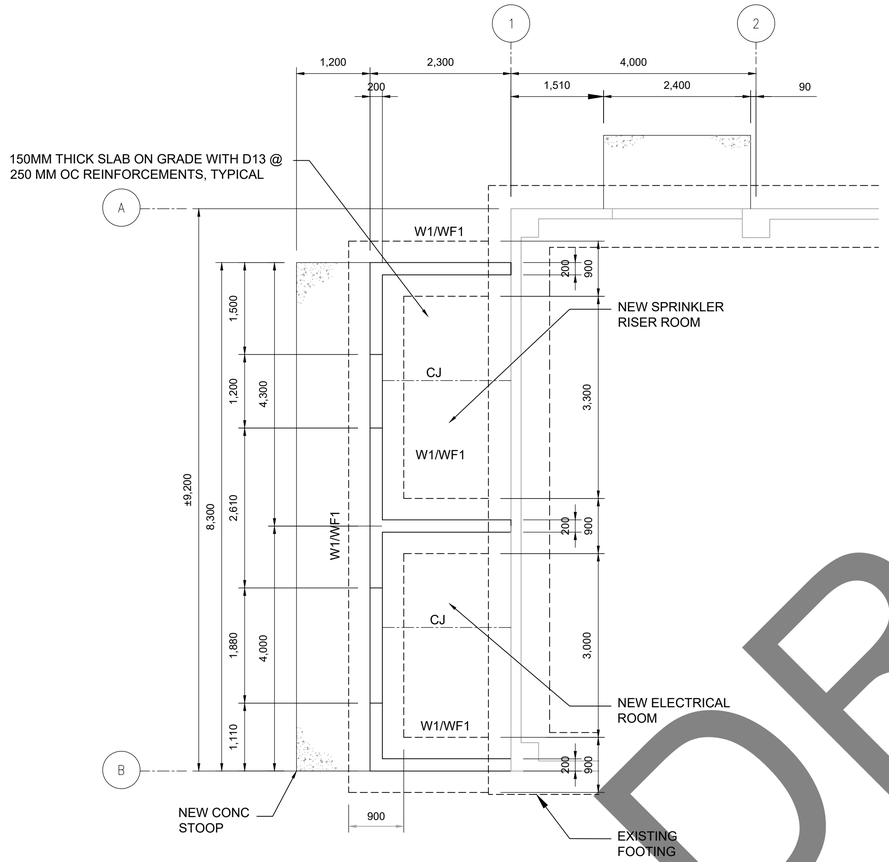

1 FOUNDATION PLAN
SCALE: 1:50

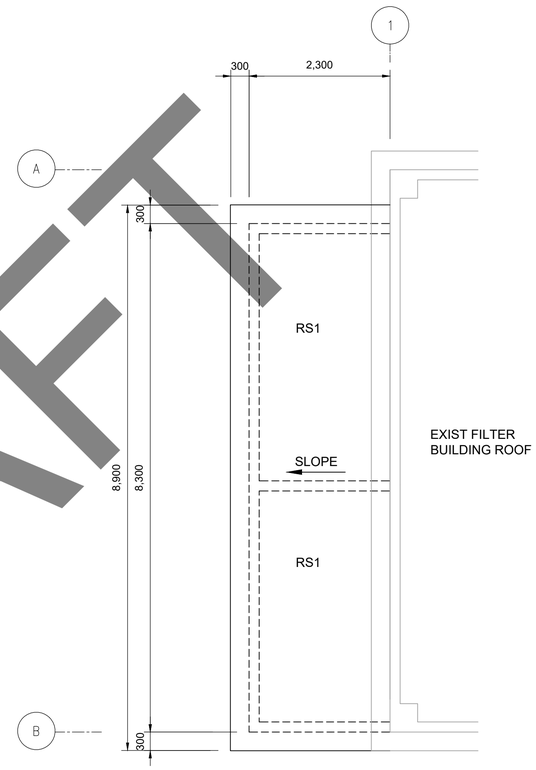

2 ROOF PLAN
SCALE: 1:50

DRAFT

US Army Corps of Engineers®

MARK	DESCRIPTION	DATE

DESIGNED BY: T.MIHORI
DRAWN BY: J.LANCERACIO
CHECKED BY: T.HATTORI
SUBMITTED BY: T.MIHORI
SIZE: ISO A1
ISSUE DATE: FEBRUARY 2022
SOLICITATION NO.: -
CONTRACT NO.: W912HV-17-D007
DRAWING CODE: -
FILE NAME: DESC20UX_S-101

U.S. ARMY CORPS OF ENGINEERS
JAPAN DISTRICT
APO AP 96343-5010

HDR - WTNA JV
1001 BISHOP STREET
SUITE 400
HONOLULU, HAWAII 96813

MISAWA AIR BASE, JAPAN
DESC 20UX INSTALL ADDITIVE INJECTION SYSTEM

FILTER BUILDING: TWO ROOMS ADDITION
FOUNDATION PLAN & ROOF PLAN

SHEET ID
S-101

FILE: DESC20UX_S-101.dwg
DATE: 2/21/2022 3:52 PM
OPER:
SCALE:

IF SHEET IS LESS THAN 594 X 841 MM
REDUCED PRINT = USE GRAPHIC SCALES

RTA SUBMITTAL

BID OPTION #1 (CANOPY)
METAL CANOPY STRUCTURE (COLUMNS, GIRDERS, BEAMS), METAL ROOFING AND FLASHING WORK

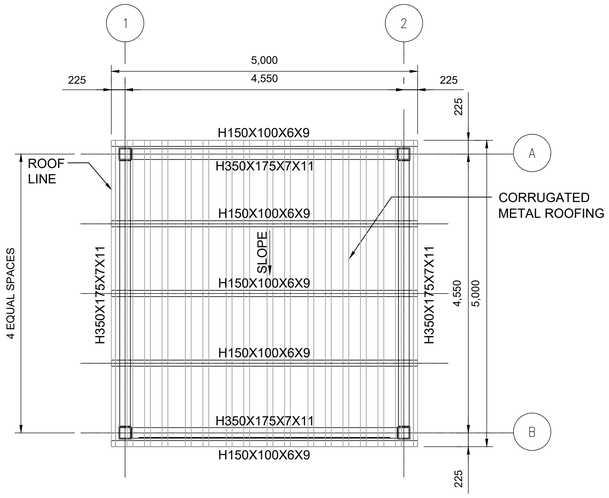

2 ROOF PLAN
SCALE: 1:50

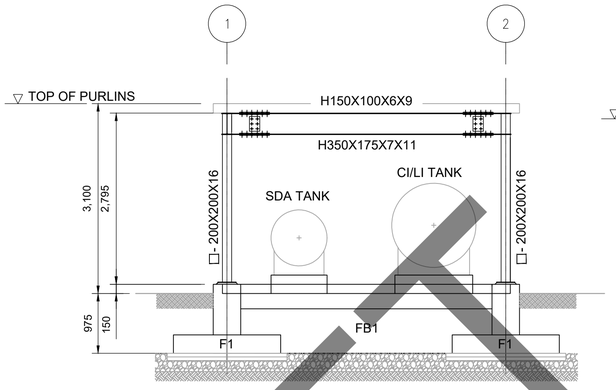

4 ELEVATION GRID A
SCALE: 1:50

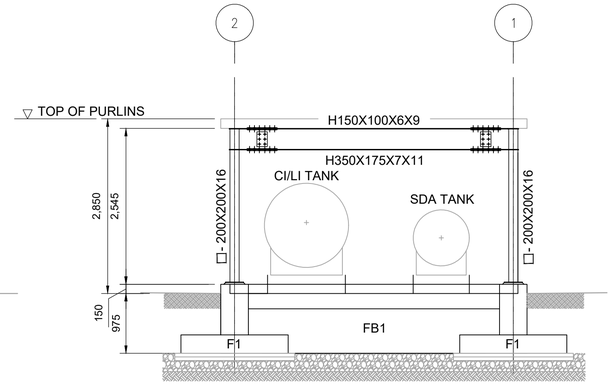

6 ELEVATION GRID B
SCALE: 1:50

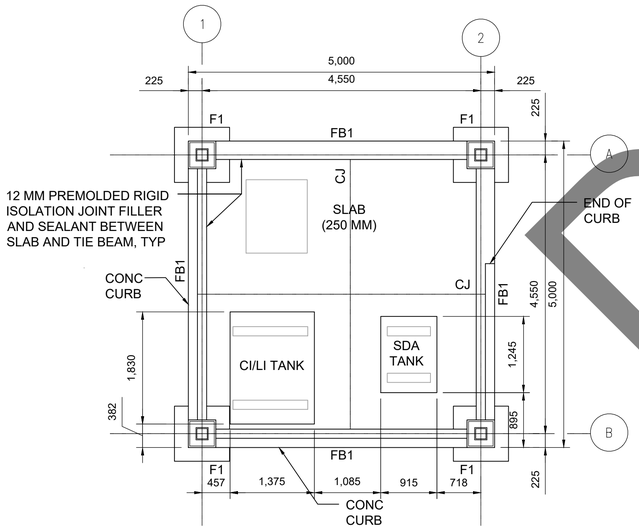

1 FOUNDATION PLAN
SCALE: 1:50

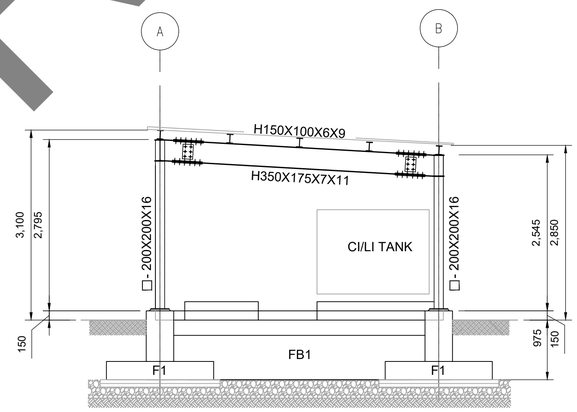

3 ELEVATION GRID 1
SCALE: 1:50

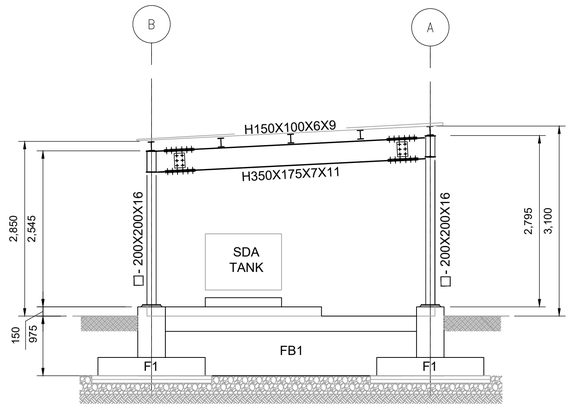

5 ELEVATION GRID 2
SCALE: 1:50

DRAFT

US Army Corps of Engineers®

MARK	DESCRIPTION	DATE

DESIGNED BY: T.MIHORI
DRAWN BY: J.MACDONALD
CHECKED BY: T.HATTORI
SUBMITTED BY: T.MIHORI
SIZE: ISO A1
ISSUE DATE: FEBRUARY 2022
SOLICITATION NO.:
CONTRACT NO.: W912HV-17-D007
DRAWING CODE: -
FILE NAME: DESC20UX_S-101

U.S. ARMY CORPS OF ENGINEERS
JAPAN DISTRICT
APO AP 96343-5010

HDR - WTNA JV
1001 BISHOP STREET
SUITE 400
HONOLULU, HAWAII 96813

MISAWA AIR BASE, JAPAN
DESC 20UX INSTALL ADDITIVE INJECTION SYSTEM

ADDITIVE CONTAINER STORAGE AREA
FOUNDATION PLAN & ROOF PLAN
(BID OPTION #1)

SHEET ID
S-102

FILE: DESC20UX_S-102.dwg
DATE: 2/21/2022 4:20 PM
OPER:
SCALE:

IF SHEET IS LESS THAN 594 X 841 MM
REDUCED PRINT = USE GRAPHIC SCALES

RTA SUBMITTAL

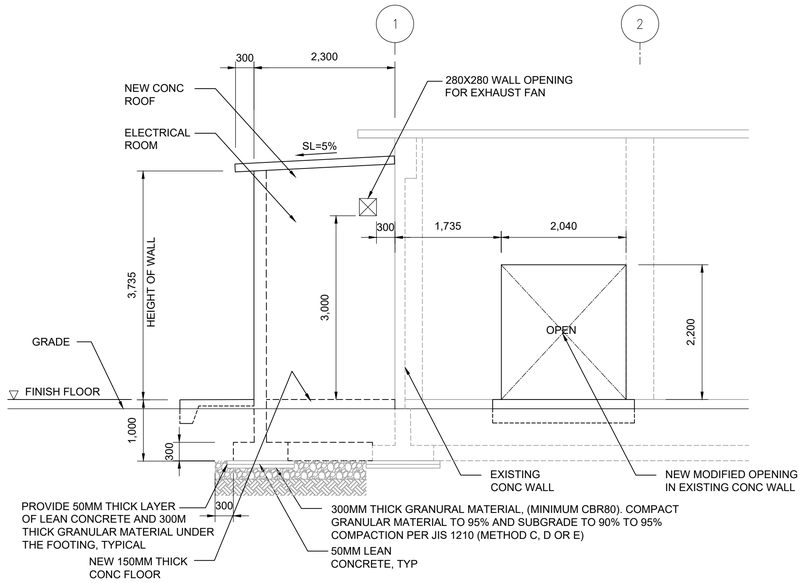

1 ELEVATION
SCALE: 1:50 0 1 2

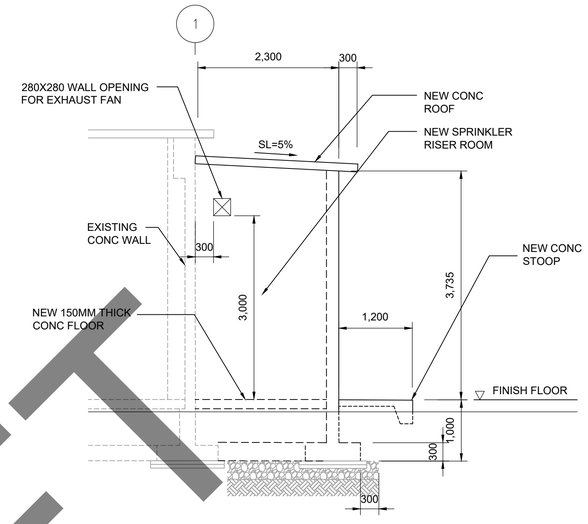

2 ELEVATION
SCALE: 1:50 0 1 2

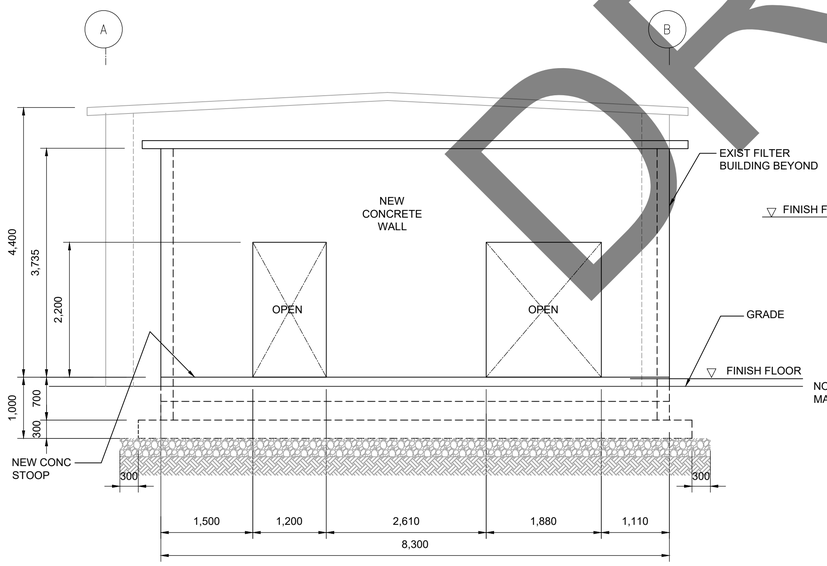

3 ELEVATION
SCALE: 1:50 0 1 2

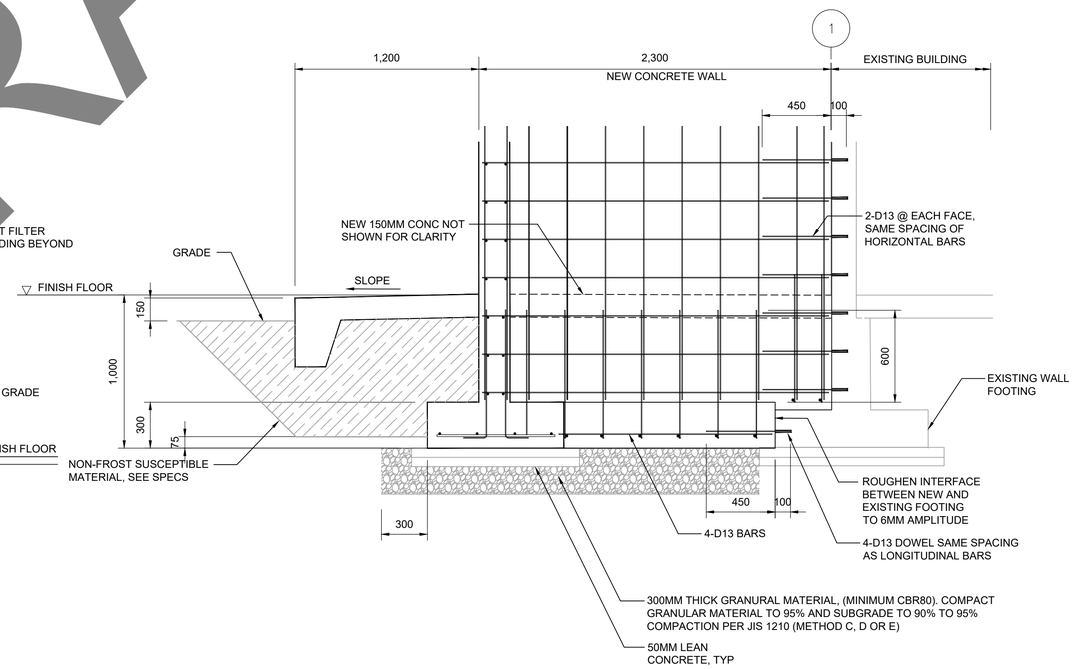

4 NEW WALL AND FOOTING INTERFACE
SCALE: 1:10 0 1 2

DRAFT

US Army Corps of Engineers®

MARK	DESCRIPTION	DATE

DESIGNED BY: T.MIHORI
DRAWN BY: J.LAVIDAD/C.IO
CHECKED BY: T.HATTORI
SUBMITTED BY: T.MIHORI
SIZE: ISO A1
ISSUE DATE: FEBRUARY 2022
SOLICITATION NO.:
CONTRACT NO.: W912HV-17-D007
DRAWING CODE: -
FILE NAME: DESC20UX_S-201

U.S. ARMY CORPS OF ENGINEERS
JAPAN DISTRICT
APO AP 96343-5010

HDR - WTNA JV
1001 BISHOP STREET
SUITE 400
HONOLULU, HAWAII 96813

MISAWA AIR BASE, JAPAN
DESC 20UX INSTALL ADDITIVE INJECTION SYSTEM

FILTER BUILDING: TWO ROOMS ADDITION & DOOR ELEVATIONS

SHEET ID
S-201

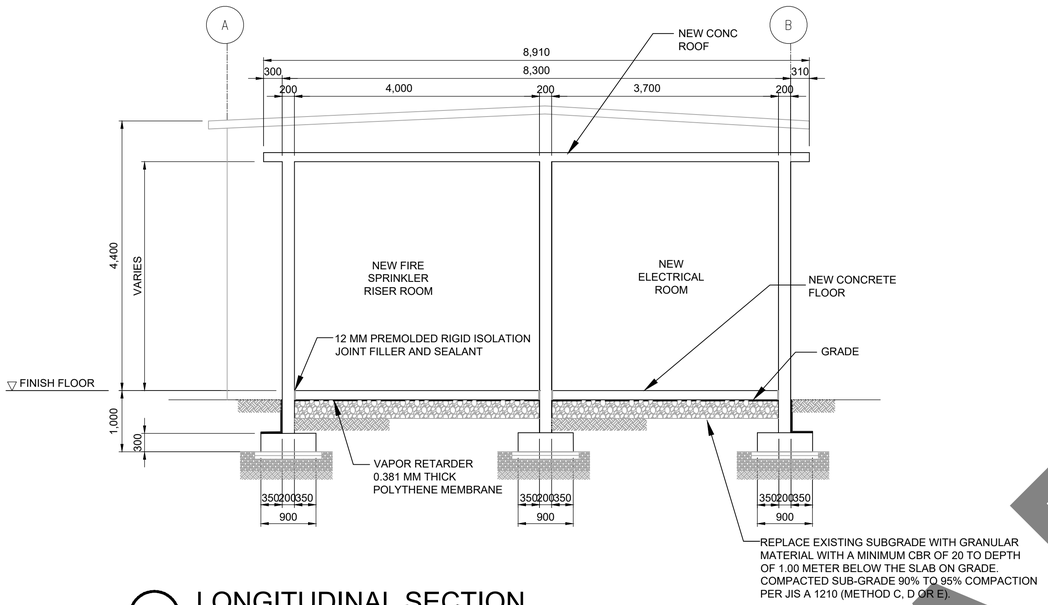

1 LONGITUDINAL SECTION
SCALE: 1:50

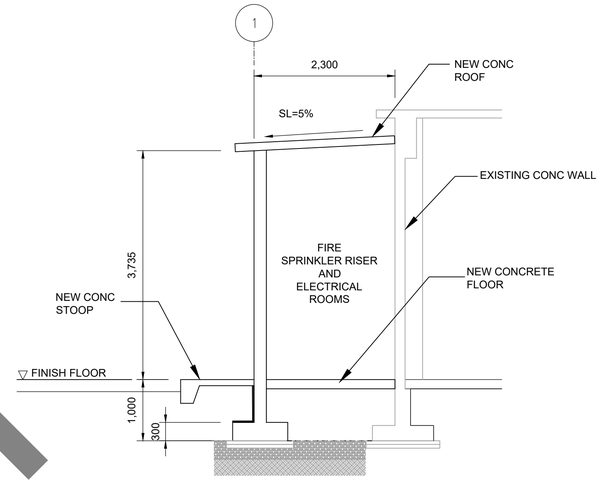

2 TRANSVERSE SECTION
SCALE: 1:50

DRAFT

US Army Corps of Engineers®

MARK	DESCRIPTION	DATE

DESIGNED BY: T.MIHORI
DRAWN BY: J.INOSACIO
CHECKED BY: T.HATTORI
SUBMITTED BY: T.MIHORI
SIZE: ISO A1
ISSUE DATE: FEBRUARY 2022
SOLICITATION NO.:
CONTRACT NO.: W912HV-17-D007
DRAWING CODE: -
FILE NAME: DESC20UX_S-301

U.S. ARMY CORPS OF ENGINEERS
JAPAN DISTRICT
APO AP 96343-5010

HDR - WTNA JV
1001 BISHOP STREET
SUITE 400
HONOLULU, HAWAII 96813

MISAWA AIR BASE, JAPAN
DESC 20UX INSTALL ADDITIVE INJECTION SYSTEM

TRANSFORMER AND GENERATOR EQUIPMENT
LONGITUDINAL SECTION & TRANSVERSE SECTION

SHEET ID
S-301

FILE: DESC20UX_S-301.dwg
DATE: 2/21/2022 4:18 PM
OPER:
SCALE:

IF SHEET IS LESS THAN 594 X 841 MM
REDUCED PRINT = USE GRAPHIC SCALES

RTA SUBMITTAL

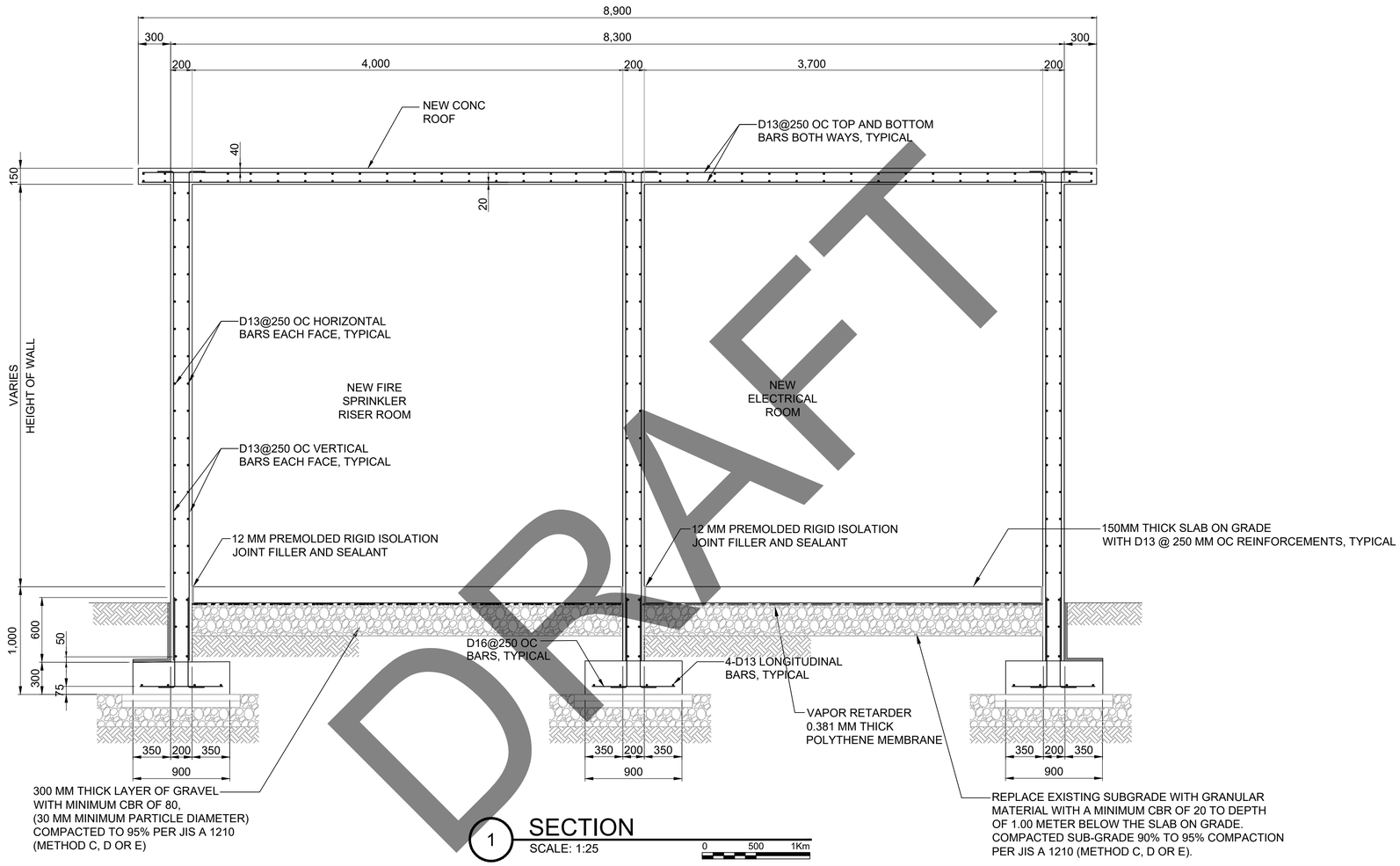

1 SECTION
SCALE: 1:25

0 500 1Km

DRAFT

US Army Corps of Engineers®

MARK	DESCRIPTION	DATE

DESIGNED BY: T.MIHORI
DRAWN BY: J.INOCENCIO
CHECKED BY: T.HATTORI
SUBMITTED BY: T.MIHORI
SIZE: ISO A1
ISSUE DATE: FEBRUARY 2022
SOLICITATION NO.:
CONTRACT NO.: W912HV-17-D007
DRAWING CODE: -
FILE NAME: DESC20UX_S-401

U.S. ARMY CORPS OF ENGINEERS
JAPAN DISTRICT
APO AP 96343-5010

HDR - WTNA JV
1001 BISHOP STREET
SUITE 400
HONOLULU, HAWAII 96813

MISAWA AIR BASE, JAPAN
DESC 20UX INSTALL ADDITIVE INJECTION SYSTEM

FILTER BUILDING: TWO ROOMS ADDITION
PLAN, SECTION AND DETAILS

SHEET ID
S-401

FILE: DESC20UX_S-401.dwg
DATE: 2/21/2022 4:17 PM
OPER:
SCALE:

IF SHEET IS LESS THAN 594 X 841 MM
REDUCED PRINT = USE GRAPHIC SCALES

RTA SUBMITTAL

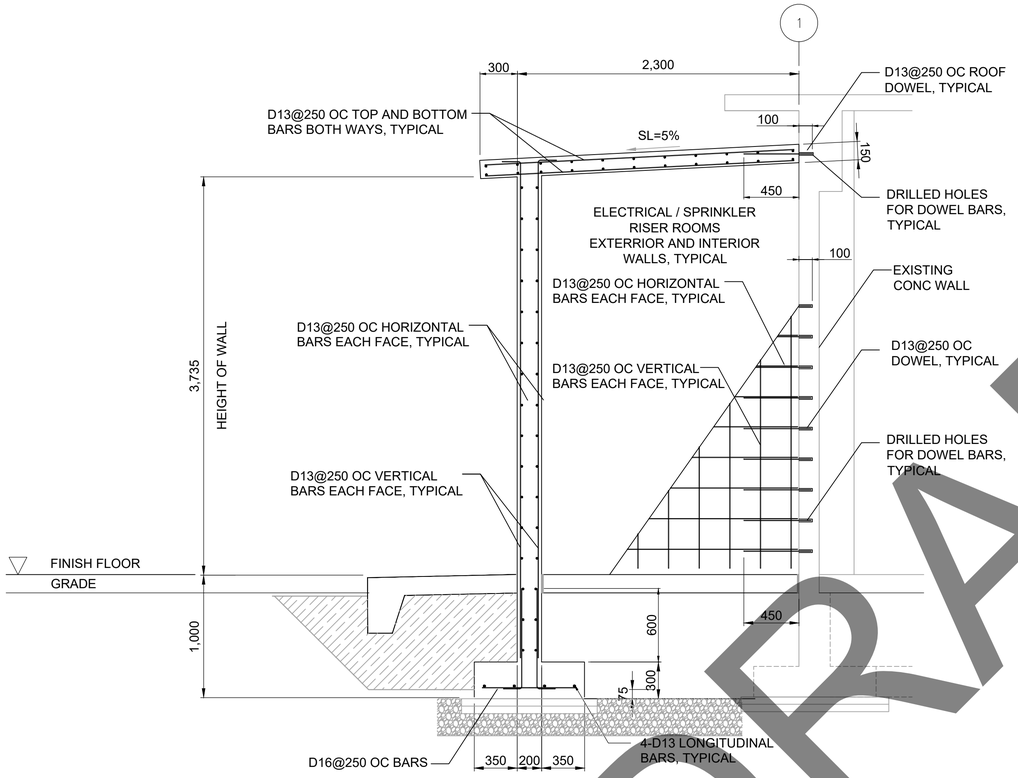

1 SECTION
SCALE: 1:25

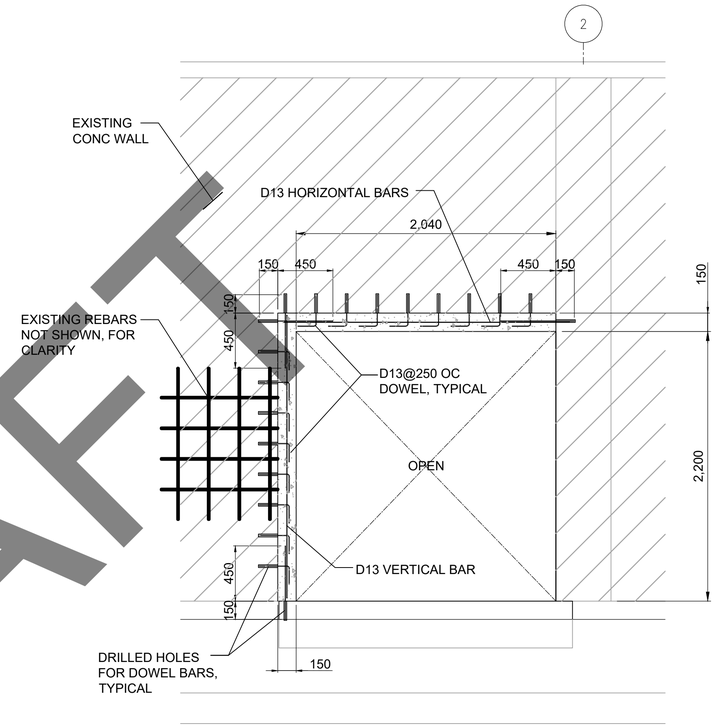

2 GRID A MODIFIED DOUBLE DOOR
SCALE: 1:25

DRAFT

US Army Corps of Engineers®

MARK	DESCRIPTION	DATE

DESIGNED BY: T.MIHORI
DRAWN BY: J.INOCENCIO
CHECKED BY: T.HATTORI
SUBMITTED BY: T.MIHORI
SIZE: ISO A1
ISSUE DATE: FEBRUARY 2022
SOLICITATION NO.:
CONTRACT NO.: W912HV-17-D007
DRAWING CODE: -
FILE NAME: DESC20UX_S-402

U.S. ARMY CORPS OF ENGINEERS
JAPAN DISTRICT
APO AP 96343-5010

HDR - WTNA JV
1001 BISHOP STREET
SUITE 400
HONOLULU, HAWAII 96813

MISAWA AIR BASE, JAPAN
DESC 20UX INSTALL ADDITIVE INJECTION SYSTEM

FILTER BUILDING: TWO ROOMS ADDITION & DOOR
PLAN, SECTION AND DETAILS

SHEET ID
S-402

FILE: DESC20UX_S-402.dwg
DATE: 2/21/2022 4:16 PM
OPER:
SCALE:

IF SHEET IS LESS THAN 594 X 841 MM
REDUCED PRINT = USE GRAPHIC SCALES

RTA SUBMITTAL

BID OPTION #1 (CANOPY)

METAL CANOPY STRUCTURE (COLUMNS, GIRDERS, BEAMS), METAL ROOFING AND FLASHING WORK

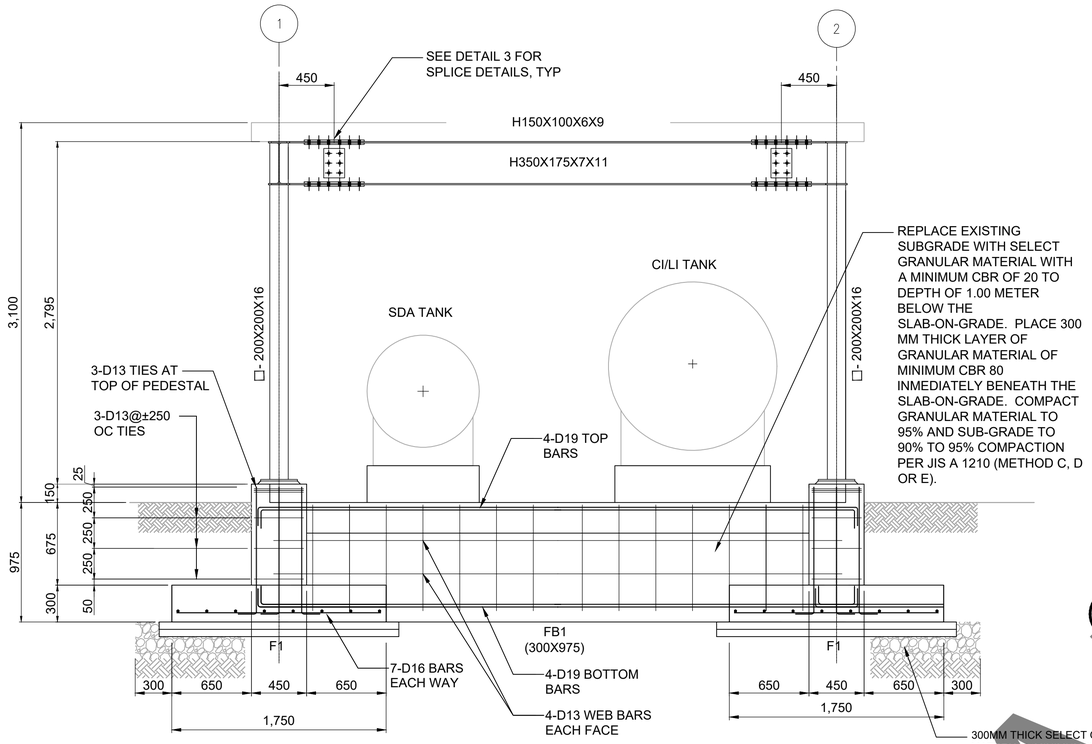

NOTES:
1. FOR OTHER DETAILS SEE GRID B
2. FOR VERT REBARS SEE DETAIL 7

1 SECTION GRID A
SCALE: 1:25

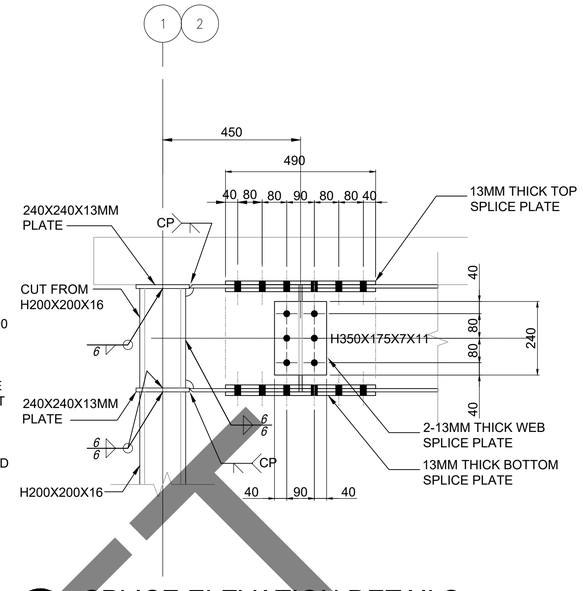

3 SPLICE ELEVATION DETAILS
SCALE: 1:10

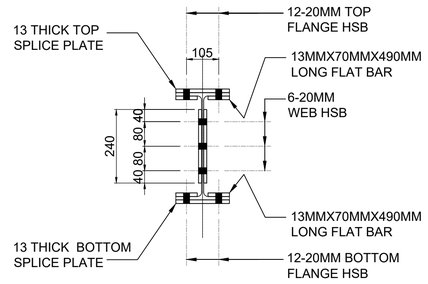

4 SPLICE SECTION DETAIL
SCALE: 1:10

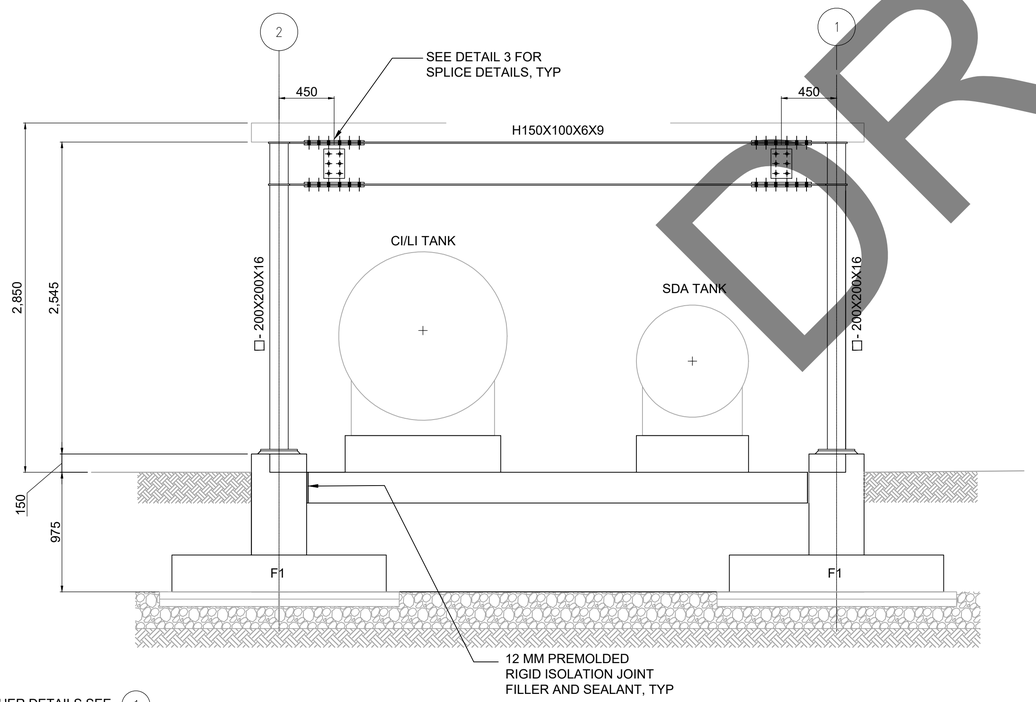

NOTES:
FOR OTHER DETAILS SEE 1

2 SECTION GRID B
SCALE: 1:25

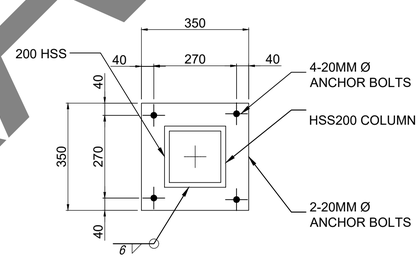

5 BASE PLATE
SCALE: 1:10

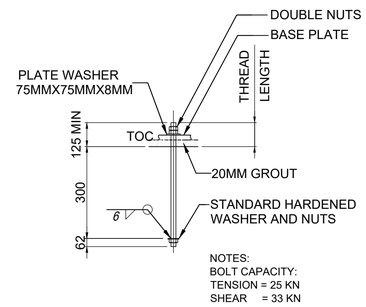

6 ANCHOR BOLT
SCALE: 1:10

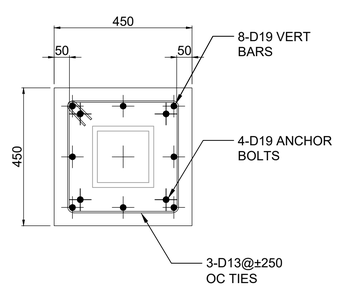

7 PEDESTAL SECTION
SCALE: 1:10

DRAFT

US Army Corps of Engineers®

MARK	DESCRIPTION	DATE

DESIGNED BY: T.MIHORI
DRAWN BY: J.MACDONALD
CHECKED BY: T.HATTORI
SUBMITTED BY: T.MIHORI
SIZE: ISO A1
FILE NAME: DESC20UX_S-402
ISSUE DATE: FEBRUARY 2022
SOLICITATION NO.: -
CONTRACT NO.: W912HV-17-D007
DRAWING CODE: -

U.S. ARMY CORPS OF ENGINEERS
JAPAN DISTRICT
APO AP 96343-5010

HDR - WTNA JV
1001 BISHOP STREET
SUITE 400
HONOLULU, HAWAII 96813

MISAWA AIR BASE, JAPAN
DESC 20UX INSTALL ADDITIVE INJECTION SYSTEM

ADDITIVE CONTAINER STORAGE AREA
PLAN, SECTION AND DETAILS
(BID OPTION #1)

SHEET ID
S-403

FILE: DESC20UX_S-403.dwg
DATE: 2/21/2022 4:07 PM
OPER:
SCALE:

IF SHEET IS LESS THAN 594 X 841 MM
REDUCED PRINT = USE GRAPHIC SCALES

RTA SUBMITTAL

BID OPTION #1 (CANOPY)

METAL CANOPY STRUCTURE (COLUMNS, GIRDERS, BEAMS), METAL ROOFING AND FLASHING WORK

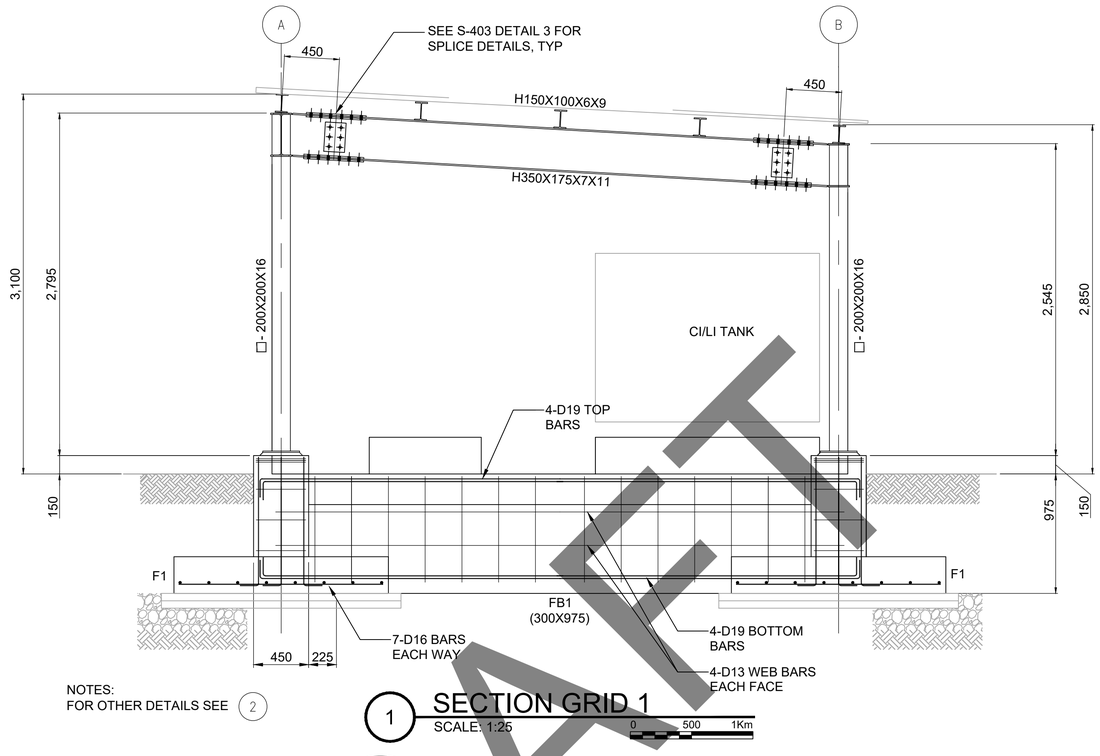

NOTES:
FOR OTHER DETAILS SEE 2

1 SECTION GRID 1
SCALE: 1:25

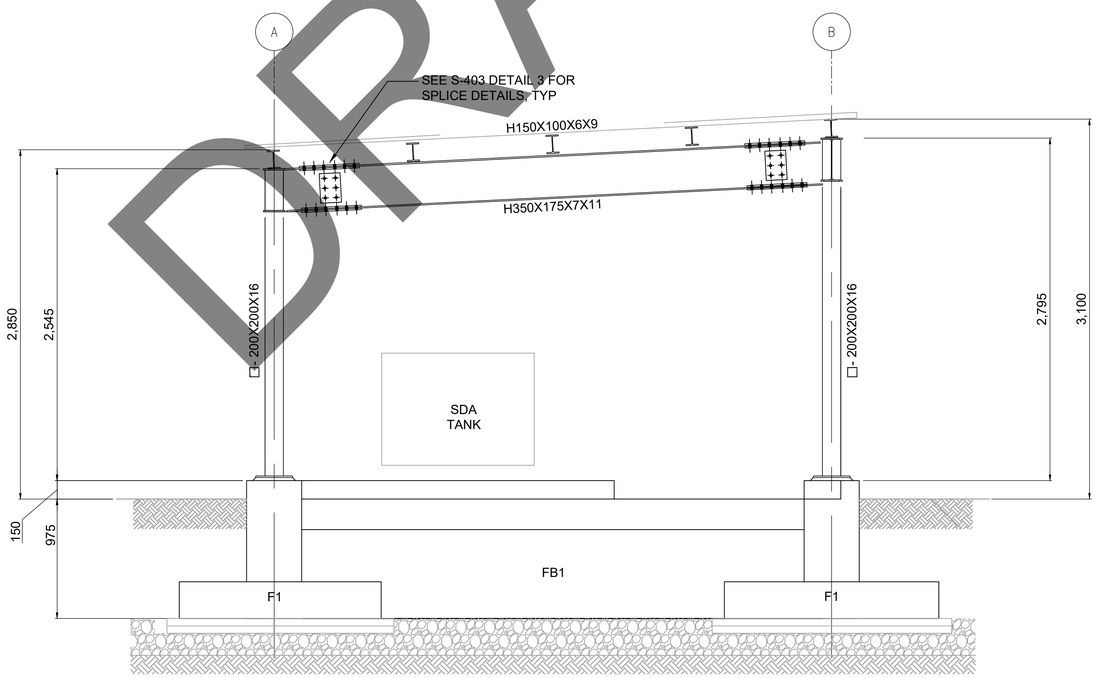

NOTES:
FOR OTHER DETAILS SEE 1

2 SECTION GRID 2
SCALE: 1:25

DRAFT

US Army Corps of Engineers®

MARK	DESCRIPTION	DATE

DESIGNED BY: T.MIHORI
DRAWN BY: J.INOCENCIO
CHECKED BY: T.HATTORI
SUBMITTED BY: T.MIHORI
SIZE: ISO A1
ISSUE DATE: FEBRUARY 2022
SOLICITATION NO.:
CONTRACT NO.: W912HV-17-D007
DRAWING CODE: -
FILE NAME: DESC20UX_S-402

U.S. ARMY CORPS OF ENGINEERS
JAPAN DISTRICT
APO AP 96343-5010

HDR - WTNA JV
1001 BISHOP STREET
SUITE 400
HONOLULU, HAWAII 96813

MISAWA AIR BASE, JAPAN
DESC 20UX INSTALL ADDITIVE INJECTION SYSTEM

ADDITIVE CONTAINER STORAGE AREA
PLAN, SECTION AND DETAILS
(BID OPTION #1)

SHEET ID
S-404

FILE: DESC20UX_S-404.dwg
DATE: 2/21/2022 4:15 PM
OPER:
SCALE:

IF SHEET IS LESS THAN 594 X 841 MM
REDUCED PRINT = USE GRAPHIC SCALES

RTA SUBMITTAL

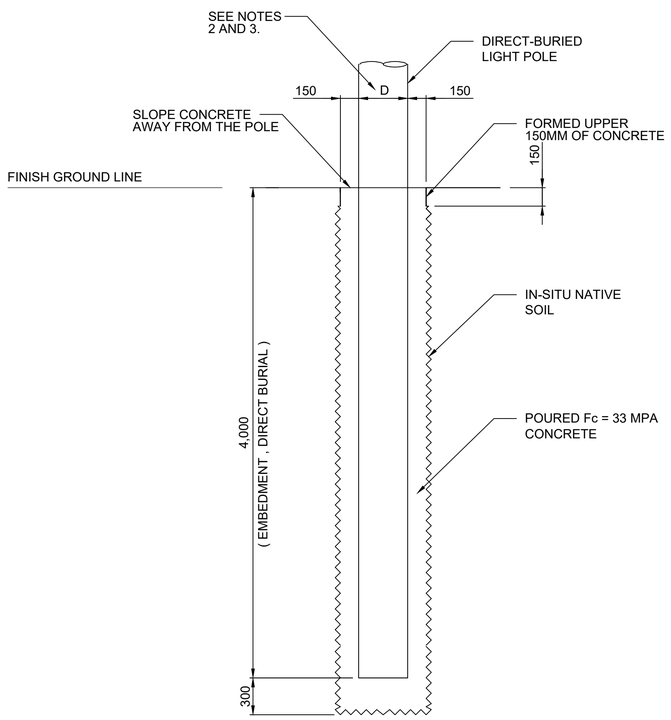

1 LIGHT POLE FOUNDATION DETAIL
SCALE: 1:25

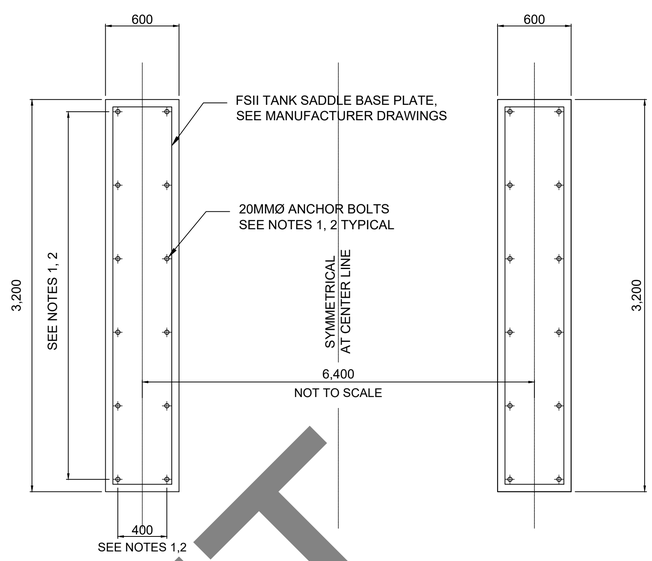

2 FSII TANK FOUNDATION PLAN
SCALE: 1:25

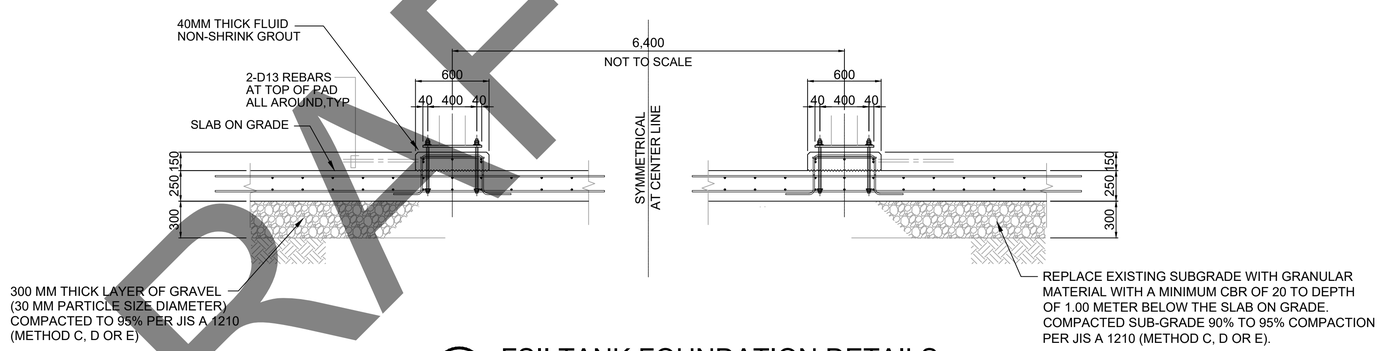

3 FSII TANK FOUNDATION DETAILS
SCALE: 1:25

NOTE :

1. CAST-PLACE CONCRETE SHALL HAVE A MINIMUM COMPRESSIVE STRENGTH F'c = 36 MPa AT 28 DAYS.
2. AREA LIGHT POLE SHALL HAVE A MINIMUM CAPACITY OF 35 kN-METER AT FINISHED GROUND LINE.
3. SEE MANUFACTURER'S DRAWINGS.

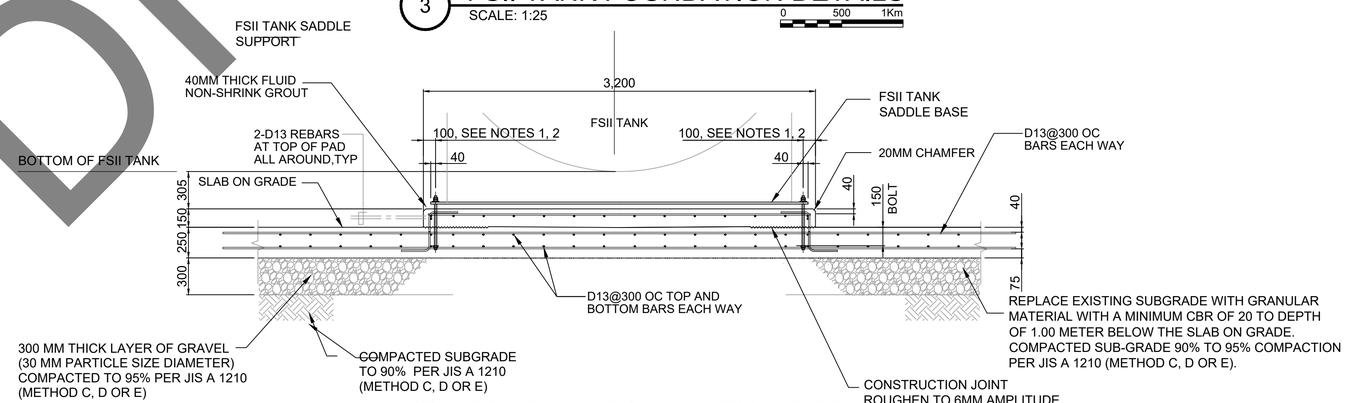

4 FSII TANK FOUNDATION DETAILS
SCALE: 1:25

NOTE :

1. DIMENSIONS, LOCATIONS AND SIZE OF MECHANICAL EQUIPMENT PAD, ANCHOR BOLTS, ETC. SHOWN ON PLAN AND RELATED SECTIONS ARE FOR GENERAL INFORMATION ONLY AND SHALL BE MODIFIED TO SUIT EQUIPMENT FURNISHED.
2. FINAL DIMENSION, ANCHOR BOLTS SIZE, AND PLACEMENT SHALL BE MADE IN ACCORDANCE WITH MANUFACTURER'S DRAWINGS.
3. CONTACT SURFACE WHOSE INTERFACE IS REQUIRED SHALL BE ROUGHENED CLEAN AND FREE OF LAITTANCE. THE ROUGHNESS SHALL HAVE A FULL AMPLITUDE OF APPROXIMATELY 6MM.
4. CONCRETE PLACED OVER PIPING SHALL BE POURED ONLY AFTER THE PIPING HAS BEEN INSPECTED, TESTED AND APPROVED.

DRAFT

US Army Corps of Engineers®

MARK	DESCRIPTION	DATE

DESIGNED BY: T.MIHORI
DRAWN BY: J.LAGUSCIO
CHECKED BY: T.HATTORI
SUBMITTED BY: T.MIHORI
SIZE: ISO A1
ISSUE DATE: FEBRUARY 2022
SOLICITATION NO.: -
CONTRACT NO.: W912HV-17-D007
DRAWING CODE: -
FILE NAME: DESC20UX_S-402

U.S. ARMY CORPS OF ENGINEERS
JAPAN DISTRICT
APO AP 96343-5010

HDR - WTNA JV
1001 BISHOP STREET
SUITE 2400
HONOLULU, HAWAII 96813

MISAWA AIR BASE, JAPAN
DESC 20UX INSTALL ADDITIVE INJECTION SYSTEM

AREA LIGHTING POLE AND FSII SADDLE DETAILS

SHEET ID
S-405

FILE: DESC20UX_S-405.dwg
DATE: 2/21/2022 4:08 PM
OPER:
SCALE:

IF SHEET IS LESS THAN 594 X 841 MM
REDUCED PRINT = USE GRAPHIC SCALES

RTA SUBMITTAL

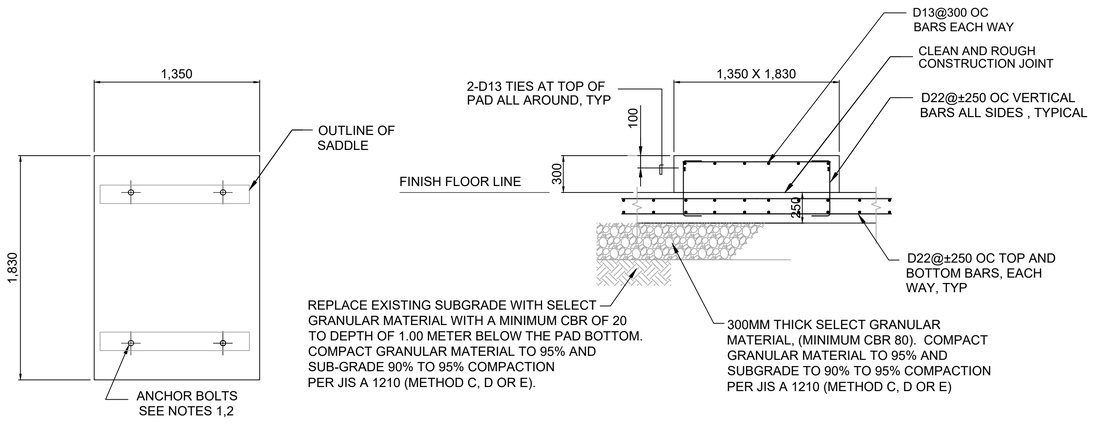

1 CL/LI TANK BEARING PAD
SCALE: 1:25

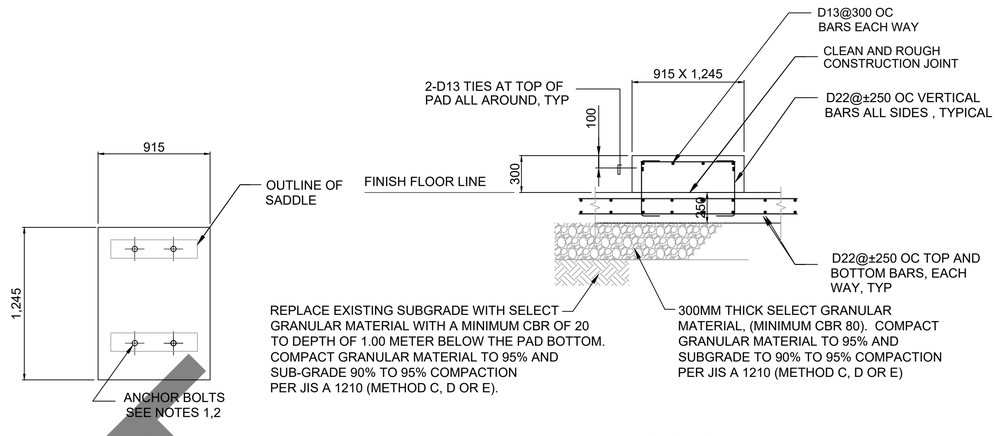

2 SDA TANK BEARING PAD
SCALE: 1:25

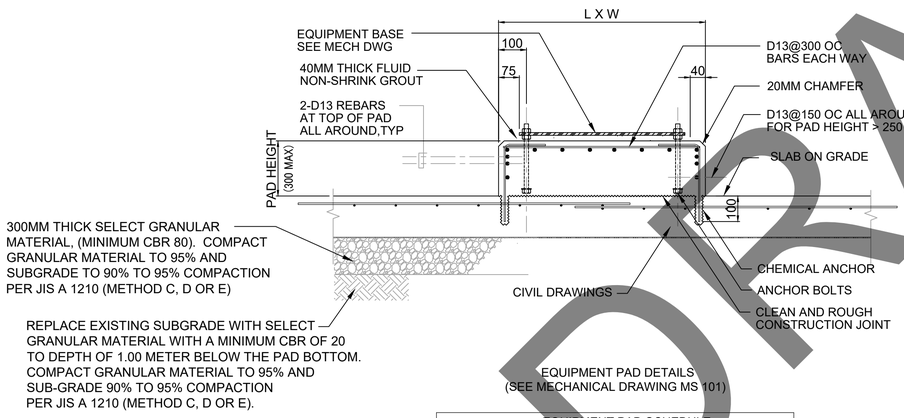

EQUIPMENT PAD DETAILS
(SEE MECHANICAL DRAWING MS 101)

EQUIPMENT PAD SCHEDULE		
EQUIPMENT NAME	L X W X H	REMARKS
VENT SUPPORT	1,100X600X150	
DESICANT DRYER	450X450X300	
FSII CHARGE PUMP	1000X600X200	
FSII OFFLOAD PUMP	1000X500X300	
CI/LI PUMP	600X300X300	
MIX TANK	750X750X600	
PU-211	800X450X350	

3 EQUIPMENT PAD
SCALE: NOT TO SCALE

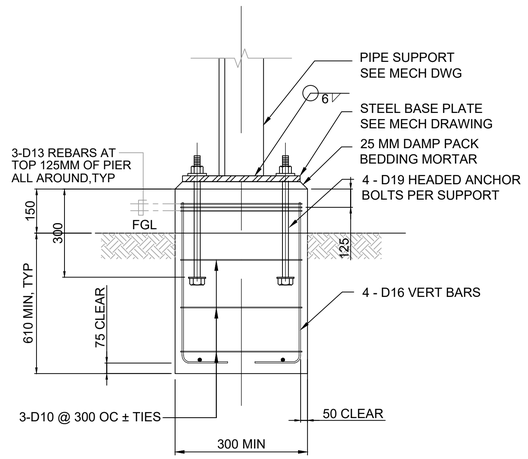

4 CONCRETE PIER FOR MINOR PIPING
SCALE: NOT TO SCALE

NOTE :

1. DIMENSIONS, LOCATIONS AND SIZE OF MECHANICAL EQUIPMENT PAD, ANCHOR BOLTS, ETC. SHOWN ON PLAN AND RELATED SECTIONS ARE FOR GENERAL INFORMATION ONLY AND SHALL BE MODIFIED TO SUIT EQUIPMENT FURNISHED.
2. FINAL DIMENSION, ANCHOR BOLTS SIZE, AND PLACEMENT SHALL BE MADE IN ACCORDANCE WITH MANUFACTURER'S DRAWINGS.
3. CONTACT SURFACE WHOSE INTERFACE IS REQUIRED SHALL BE ROUGHENED CLEAN AND FREE OF LAITTANCE. THE ROUGHNESS SHALL HAVE A FULL AMPLITUDE OF APPROXIMATELY 6MM.
4. CONCRETE PLACED OVER PIPING SHALL BE POURED ONLY AFTER THE PIPING HAS BEEN INSPECTED, TESTED AND APPROVED.

DRAFT

US Army Corps of Engineers®

MARK	DESCRIPTION	DATE

DESIGNED BY: T.MIHORI
DRAWN BY: J.HACHIYA/C.IO
CHECKED BY: T.HATTORI
SUBMITTED BY: T.MIHORI
SIZE: ISO A1
ISSUE DATE: FEBRUARY 2022
SOLICITATION NO.:
CONTRACT NO.: W912HV-17-D007
DRAWING CODE: -
FILE NAME: DESC20UX_S-402

U.S. ARMY CORPS OF ENGINEERS
JAPAN DISTRICT
APO AP 96343-5010

HDR - WTNA JV
1001 BISHOP STREET
SUITE 400
HONOLULU, HAWAII 96813

MISAWA AIR BASE, JAPAN
DESC 20UX INSTALL ADDITIVE INJECTION SYSTEM

EQUIPMENT PADS AND PIER
PLAN, SECTION AND DETAILS

SHEET ID
S-406

NOTE :
1. FOR SLAB ON GRADE THICKNESS (T) AND REINFORCEMENTS, SEE FOUNDATION PLAN.
2. CONTROL JOINT (CJ) = 24T TO 36T OR ± 3.5 METERS MAXIMUM CENTER TO CENTER EACHWAY.

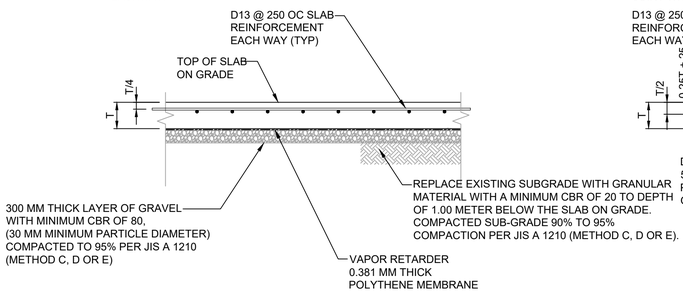

1 SLAB ON GRADE
SCALE: NOT TO SCALE

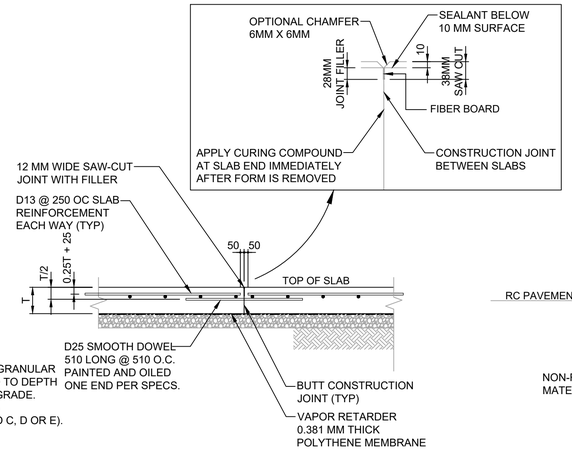

2 DOWELED CONSTRUCTION JOINT (CJ)
SCALE: NOT TO SCALE

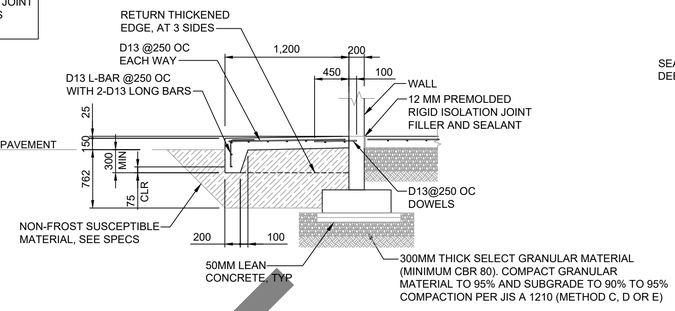

3 STOOP DETAIL
SCALE: NOT TO SCALE

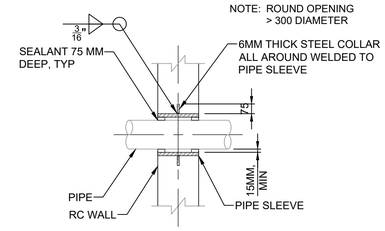

4 PIPE SLEEVE THRU WALL DETAILS
SCALE: NOT TO SCALE

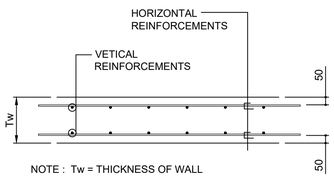

NOTE : Tw = THICKNESS OF WALL

PLAN

TYPICAL REINFORCED WALL DETAIL

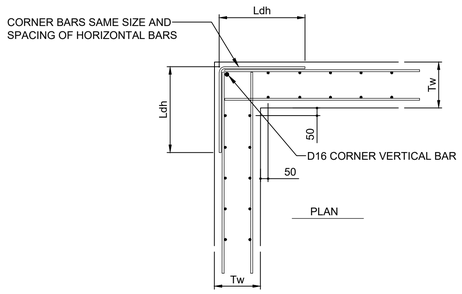

PLAN

TYPICAL WALL CORNER DETAIL

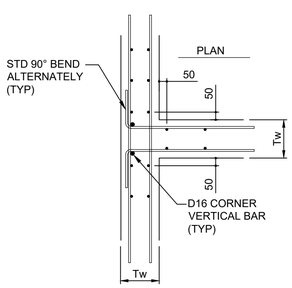

PLAN

TYPICAL WALL INTERSECTION DETAIL

5 TYPICAL WALL DETAIL
SCALE: NOT TO SCALE

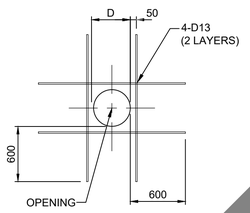

D ≤ 300

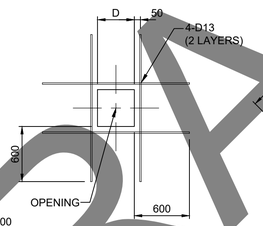

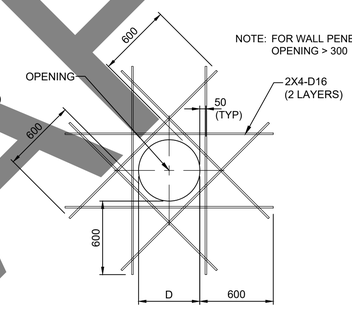

300 < D ≤ 500

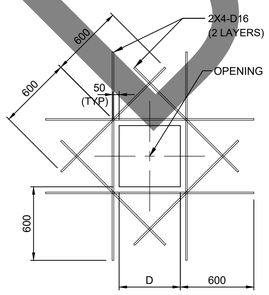

300 < D ≤ 500

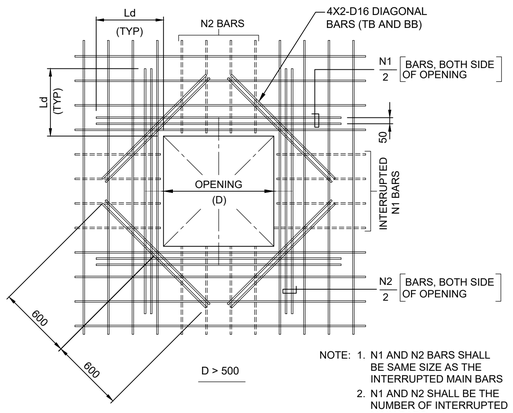

D > 500

NOTE:
1. N1 AND N2 BARS SHALL BE SAME SIZE AS THE INTERRUPTED MAIN BARS
2. N1 AND N2 SHALL BE THE NUMBER OF INTERRUPTED MAIN BARS

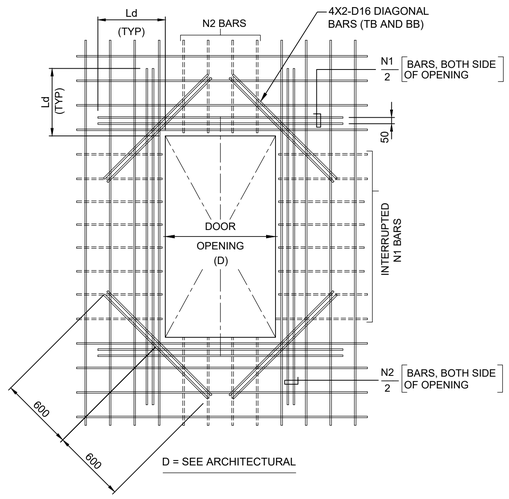

D = SEE ARCHITECTURAL

6 TYPICAL WALL AND SLAB OPENING DETAILS
SCALE: NOT TO SCALE

7 TYPICAL DOOR OPENING DETAILS
SCALE: NOT TO SCALE

DRAFT

US Army Corps of Engineers®

MARK	DESCRIPTION	DATE

DESIGNED BY: T.MIHORI
DRAWN BY: J.MACEDONIO
CHECKED BY: T.HATTORI
SUBMITTED BY: T.MIHORI
SIZE: ISO A1
FILE NAME: DESC20UX_S-501
ISSUE DATE: FEBRUARY 2022
SOLICITATION NO.:
CONTRACT NO.: W912HV-17-D007
DRAWING CODE: -

U.S. ARMY CORPS OF ENGINEERS
JAPAN DISTRICT
APO AP 96343-5010

HDR - WTNA JV
1001 BISHOP STREET
SUITE 400
HONOLULU, HAWAII 96813

MISAWA AIR BASE, JAPAN
DESC 20UX INSTALL ADDITIVE INJECTION SYSTEM

TYPICAL DETAILS

SHEET ID
S-501

FILE: DESC20UX_S-501.dwg
DATE: 2/21/2022 4:11 PM
OPER:
SCALE:

IF SHEET IS LESS THAN 594 X 841 MM
REDUCED PRINT = USE GRAPHIC SCALES

RTA SUBMITTAL

NOTE:
C250 = C250X80X8
L100 = L100X100X13

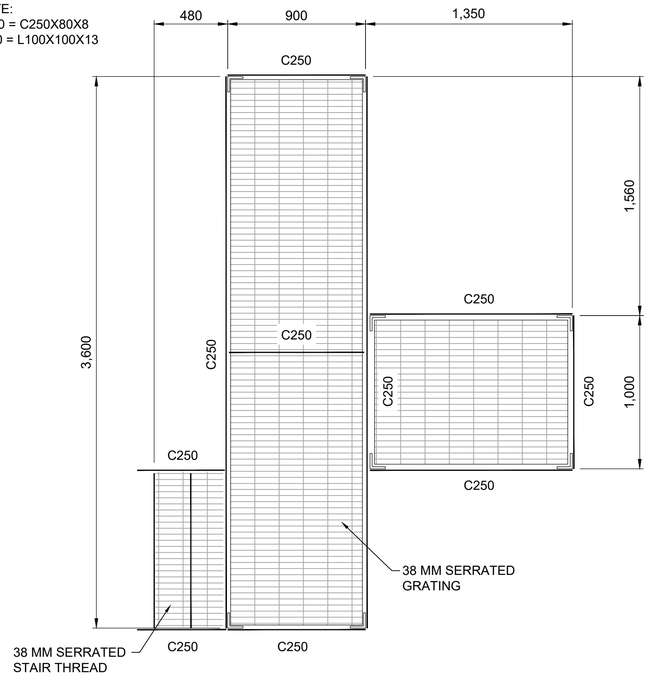

1 CI/LI AND SDA TANKS PLATFORM FRAMING PLAN

SCALE: 1:50

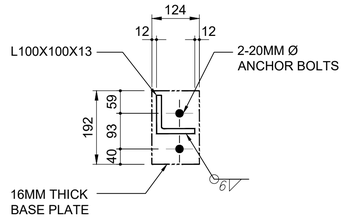

BASE PLATE

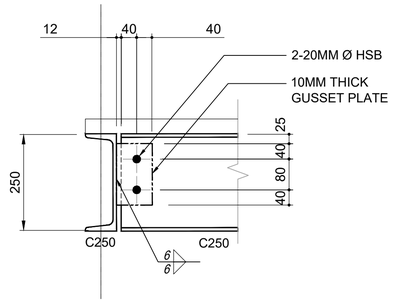

C250X80X8 / C250X80X8

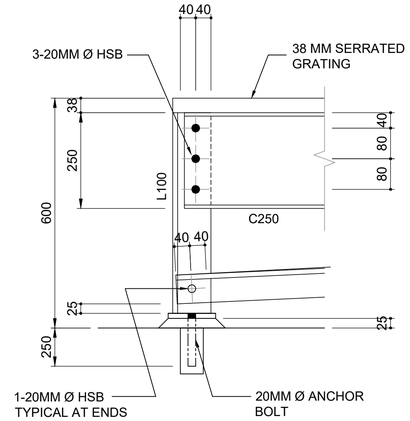

L100X100X16 / C250X80X8

4 MISCELLANEOUS DETAIL

SCALE: 1:10

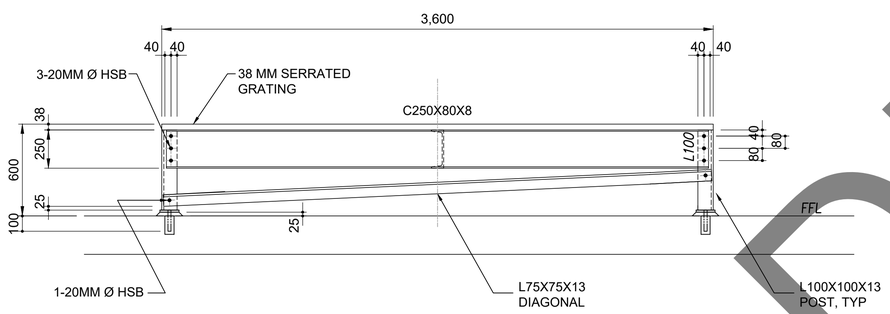

2 RIGHT ELEVATION

SCALE: 1:50

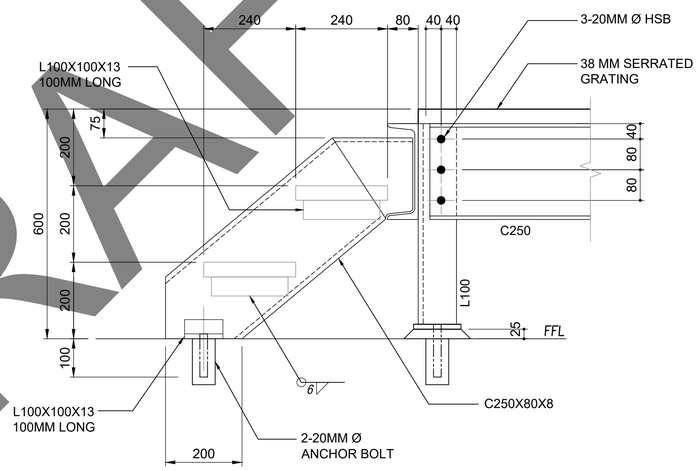

5 STAIR DETAILS

SCALE: 1:10

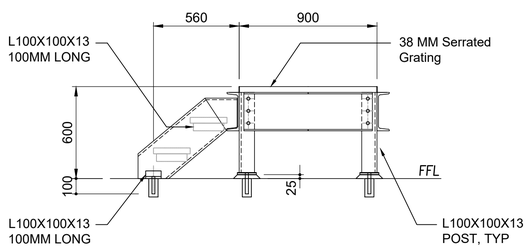

3 FRONT ELEVATION

SCALE: 1:50

DRAFT

US Army Corps of Engineers®

MARK	DESCRIPTION	DATE

DESIGNED BY: T.MIHORI
DRAWN BY: J.INOCIO
CHECKED BY: T.HATTORI
SUBMITTED BY: T.MIHORI
SIZE: ISO A1
ISSUE DATE: FEBRUARY 2022
SOLICITATION NO.:
CONTRACT NO.: W912HV-17-D007
DRAWING CODE: -
FILE NAME: DESC20UX_S-101

U.S. ARMY CORPS OF ENGINEERS
JAPAN DISTRICT
APO AP 96343-5010

HDR - WTNA JV
1001 BISHOP STREET
SUITE 400
HONOLULU, HAWAII 96813

MISAWA AIR BASE, JAPAN
DESC 20UX INSTALL ADDITIVE INJECTION SYSTEM

ADDITIVE CONTAINER STORAGE AREA
PLATFORMS PLANS, SECTIONS AND DETAILS

SHEET ID
S-502

FILE: DESC20UX_S-502.dwg
DATE: 2/21/2022 4:12 PM
OPER:
SCALE:

IF SHEET IS LESS THAN 594 X 841 MM
REDUCED PRINT = USE GRAPHIC SCALES

RTA SUBMITTAL

ABBREVIATIONS

AG	ABOVE GRADE
AI	ADDITIVE INJECTOR
AP	ADDITIVE PUMP
ASME	AMERICAN SOCIETY OF MECHANICAL ENGINEERS
AST	ABOVEGROUND STORAGE TANK
AT	ADDITIVE TANK
ATG	AUTOMATIC TANK GAUGING
BLDG	BUILDING
CI/LI	CORROSION INHIBITOR/LUBRICITY IMPROVER
℄	CENTERLINE
cP	CENTIPOISE
CS	CARBON STEEL
DB&B	DOUBLE BLOCK AND BLEED
DIV	DIVISION
DN	DIAMETER NOMINAL
DP	DRUM PUMP
FSII	FUEL SYSTEM ICING INHIBITOR
FS	FILTER/SEPARATOR
GAL	GALLONS
GPM	GALLONS PER MINUTE
HA	HAND-AUTO
HPV	HIGH POINT VENT
HZ	HERTZ
IBC	INTERMEDIATE BULK CONTAINER
kL	KILOLITERS
kPa	KILOPASCALS
kW	KILOWATTS
L	LITERS
LG	LEVEL GAUGE
LPM	LITERS PER MINUTE
LPD	LOW POINT DRAIN
m	METER (DIMENSION)
mm	MILLIMETER
M	MOTOR OR METER (EQUIPMENT)
MF	MICRONIC FILTER
MFR	MANUFACTURER
MPa	MEGAPASCALS
MX	MIXER
N/A	NOT APPLICABLE
NC	NORMALLY CLOSED
NDE	NON-DESTRUCTIVE EXAMINATION
NO	NORMALLY OPEN
NTS	NOT TO SCALE
OP	OFFLOAD PUMP
PDM	POSITIVE DISPLACEMENT METER
PH OR Ø	PHASE
PI	PRESSURE INDICATOR
POL	PETROLEUM, OIL, AND LUBRICANTS
PPM	PARTS PER MILLION
PRV	PRESSURE RELIEF VALVE
PSI	POUNDS PER SQUARE INCH
PSID	POUNDS PER SQUARE INCH DIFFERENTIAL
RPM	REVOLUTIONS PER MINUTE
S	STRAINER OR SOLENOID
SDA	STATIC DISSIPATOR ADDITIVE
SG	SPECIFIC GRAVITY
SS	STAINLESS STEEL
T	TANK
THD	THREADED
TYP	TYPICAL
UL	UNDERWRITERS LABORATORY
VAC	VOLTS ALTERNATING CURRENT
#	NUMBER OR POUND

GENERAL MECHANICAL NOTES

1. MECHANICAL POL PIPING FABRICATION, WELDING, AND NON-DESTRUCTIVE EXAMINATION AND PNEUMATIC/ HYDROSTATIC TESTING MUST BE IN ACCORDANCE WITH ASME B31.3 UNLESS OTHERWISE INDICATED.
2. FIELD VERIFY DIMENSIONS AND ELEVATIONS OF EXISTING PIPING PRIOR TO FABRICATION OF CONNECTING PIPING.
3. PROTECT EXISTING PIPING TO REMAIN FROM DAMAGE DURING DEMOLITION AND PIPE REMOVAL. DAMAGE TO EXISTING PIPE, PIPE SUPPORT AND/OR TANK COATINGS RESULTING FROM DEMOLITION AND CONSTRUCTION MUST BE REPAIRED.
4. THE GOVERNMENT WILL BE RESPONSIBLE FOR DRAIN-DOWN THE OF THE EXISTING PIPING SYSTEM AS REQUIRED TO PERFORM WORK. THE CONTRACTOR IS RESPONSIBLE FOR REMOVAL AND DISPOSAL OF ANY RESIDUAL FUEL FROM THE PIPING SYSTEM. THE CONTRACTOR SHALL ASSUME A RESIDUAL FUEL AMOUNT OF APPROXIMATELY 190 LITERS (50 GALLONS) WILL REMAIN AFTER GOVERNMENT DRAIN-DOWN. ON-SPEC FUEL REMOVED BY THE CONTRACTOR MUST BE RETURNED TO THE GOVERNMENT. THE CONTRACTOR MUST PROVIDE A MANIFEST TO THE GOVERNMENT INDICATING THE VOLUME OF OFF-SPEC FUEL/ SLUDGE DISPOSED OF OFF-SITE.
5. DEFINITIONS:
   - A. PURGING: THE COMPLETE REMOVAL OF FUEL FROM PIPING BY USING VACUUM EQUIPMENT TO REMOVE FUEL AT LOW POINTS, AND/OR COLD CUTTING PIPING AT LOW POINTS TO DRAIN FUEL.
   - B. INERTING: THE REMOVAL OR NEUTRALIZATION OF EXPLOSIVE VAPORS IN PIPE OR PORTIONS OF PIPE WHICH PREVIOUSLY CONTAINED FUEL AS REQUIRED TO PERFORM HOT WORK.
   - C. DEMOLISH: REMOVE AND DISPOSE OF OFF-SITE.
6. AFTER DRAIN-DOWN, COLD CUT THE PIPING USING A MULTI-WHEEL PIPE CUTTER AND NON-FLAMMABLE LUBRICATION.
7. THE PIPING MUST BE PURGED AND INERTED AS REQUIRED TO MAKE TIE-IN WELDS AND PERFORM HOT WORK SAFELY.
8. HOT-WORK, PIPE END PREPARATION, AND WELDING MUST BE ACCOMPLISHED BY:
   - A. COMPLETE HEADER PURGING AND INERTING BETWEEN ISOLATION POINTS, OR
   - B. USING GAS BARRIER PLUGS AND INTERTING IN ACCORDANCE WITH API BULLETING 2209.
9. PROVIDE BLOCKING AS REQUIRED WHEN REMOVING COMPONENTS TO MAINTAIN PIPE AND FLANGE BOLT ALIGNMENT.
10. THE FOLLOWING WELD CLEARANCES MUST BE MAINTAINED DURING PIPING CONSTRUCTION :
    - A. PROVIDE A MINIMUM OF 75 mm BETWEEN ADJACENT PIPE GIRTH WELDS
    - B. PROVIDE A MINIMUM OF 50 mm BETWEEN A PIPE GIRTH WELD AND ADJACENT WELD FOR BRANCH FITTINGS
    - C. PROVIDE A MINIMUM OF 25 mm BETWEEN A PIPE GIRTH WELD AND ADJACENT PIPE SUPPORT ATTACHMENT WELD.
11. COORDINATE FINAL VALVE AND INSTRUMENT IDENTIFICATION TAG NUMBERS WITH MISAWA FUELS AND IDENTIFY NUMBER CHANGES IN AS-BUILT DRAWINGS.
12. COORDINATE ANY FUEL SYSTEM DOWNTIME WITH THE GOVERNMENT. SYSTEM DOWNTIME MUST NOT EXCEED 21 DAYS WITHOUT WRITTEN AUTHORIZATION FROM THE CONTRACTING OFFICER. PROVIDE THE GOVERNMENT 45 DAYS ADVANCE NOTICE PRIOR TO SCHEDULED SYSTEM DOWNTIME.

INSTRUMENT IDENTIFICATION KEY

	FIRST LETTER		SUCCEEDING LETTERS		
	MEASURED OR INITIATING VARIABLE	MODIFIER	READOUT OF PASSIVE FUNCTION	OUTPUT FUNCTION	MODIFIER
A	ANALYSIS		ALARM		
B	BURNER, COMBUSTION				
C				CONTROL	
D	SPECIFIC GRAVITY	DIFFERENTIAL			
E	VOLTAGE		SENSOR (PRIMARY ELEMENT)		
F	FLOW RATE	RATIO (FRACTION)			
G			GLASS		
H	HAND				HIGH
I	CURRENT (ELECTRICAL)		INDICATE		
J	POWER				
K	TIME				
L	LEVEL		LIGHT (PILOT)		LOW
M		MOMENTARY			MIDDLE (INTERMEDIATE)
N					
O			ORIFICE (RESTRICTION)		
P	PRESURE			POINT (TEST CONNECTION)	
Q	QUANTITY	INTEGRATE OR TOTALIZE			
R	RADIATION		RECORD OR PRINT		
S	SPEED OR FREQUENCY	SAFETY		SWITCH	
T	TEMPERATURE			TRANSMIT	
U	MULTIVARIABLE		MULTIFUNCTION	MULTIFUNCTION	MULTIFUNCTION
V	VIBRATION			VALVE, DAMPER OR LOUVER	
W	WEIGHT OR FORCE		WELL		
X	UNCLASSIFIED		UNCLASSIFIED	UNCLASSIFIED	UNCLASSIFIED
Y				RELAY, COMPUTER OR SOLENOID	
Z	POSITION			DRIVE, ACTUATE OR UNCLASSIFIED FINAL CONTROL ELEMENT	

FLOW DIAGRAM SYMBOLS

- ADDITIVE INJECTOR (POSITIVE DISPLACEMENT TYPE)
- ANGLE PATTERN BALL CHECK SHUTOFF VALVE
- BALL VALVE
- BASKET STRAINER
- BLIND FLANGE
- CAM AND GROOVE TYPE COUPLING
- CHECK VALVE - SWING TYPE
- CHECK VALVE - WAFER TYPE
- CONNECT TO EXISTING
- DIAPHRAGM CONTROL VALVE - GLOBE PATTERN
- DOUBLE BLOCK AND BLEED (PLUG) VALVE
- FLANGE CONNECTION
- FLOW ARROW (INDICATES DIRECTION OF FLOW)
- HAND PUMP
- LIMITS OF REMOVAL (REMOVE ON SHADED SIDE)
- METER - POSITIVE DISPLACEMENT
- MIXER
- MOTOR (ELECTRIC)
- NOZZLE
- ORIFICE PLATE
- PRESSURE INDICATOR
- PRESSURE RELIEF VALVE
- PRESSURE/VACUUM VENT
- REDUCER (CONCENTRIC)
- REDUCER (ECCENTRIC)
- SAMPLE CONNECTION (QUICK DISCONNECT-TYPE)
- SAMPLING/GAUGING HATCH
- SIGHT FLOW INDICATOR
- SLIDING-VANE POSITIVE DISPLACEMENT PUMP (SIDE INLET, SIDE DISCHARGE)
- WELD DOT
- WYE STRAINER

INSTRUMENT IDENTIFICATION LEGEND

- LOCAL, FIELD MOUNTED INSTRUMENT
- MAIN, CENTRAL PANEL MOUNTED DISPLAY
- CONTROL/INTERLOCK SCHEME
- ADDITIVE INJECTION PANEL

NOTE: SEE INSTRUMENT IDENTIFICATION KEY TO DETERMINE XXX MEANING.

FLOW DIAGRAM LINE DESIGNATIONS

- EXISTING MAJOR PIPING
- EXISTING MINOR (SMALL BORE) PIPING
- EXISTING PIPING DEMOLITION
- MAJOR PIPING
- MINOR (SMALL BORE) PIPING
- ELECTRICAL SIGNAL
- M-0XX-YYZZ — PIPE IS CONTINUED ON SHEET M-0XX WITH LINE NUMBER YYZZ, FLOW IS FROM THAT DRAWING
- M-0XX-YYZZ — PIPE IS CONTINUED ON SHEET M-0XX WITH LINE NUMBER YYZZ, FLOW IS TO THAT DRAWING
- DNXX-AABB-YYZZ — PIPE SIZE AND MATERIAL IDENTIFICATION
  - PIPE SIZE (DIAMETER NOMINAL)
  - PIPE MATERIAL (CS OR SS)
  - ASME CLASS (150 OR 300)
  - UNIT AREA NUMBER
  - LINE NUMBER

DRAFT

US Army Corps of Engineers®

MARK	DESCRIPTION	DATE

DESIGNED BY: C.SCHIEWMAN
DRAWN BY: D.CHEWMAN
CHECKED BY: M.FRITZ
SUBMITTED BY: K.WARING
SIZE: ISO A1
ISSUE DATE: FEBRUARY 2022
SOLICITATION NO.: -
CONTRACT NO.: W912HV-17-D-0007
DRAWING CODE: -
FILE NAME: DESC20UX-M-001.dwg

U.S. ARMY CORPS OF ENGINEERS
POL DISTRICT
APO AP 96343-5010

ENTERPRISE ENGINEERING, INC.
2600 CUSHING STREET
SUITE 200
ANCHORAGE, AK 99503
400 US ROUTE 1
NORTH SUITE B
FALMOUTH, ME 04105

DESC 20UX
INSTALL ADDITIVE INJECTION SYSTEM
MISAWA AIR BASE, JAPAN

ABBREVIATIONS AND LEGENDS

SHEET ID
M-001

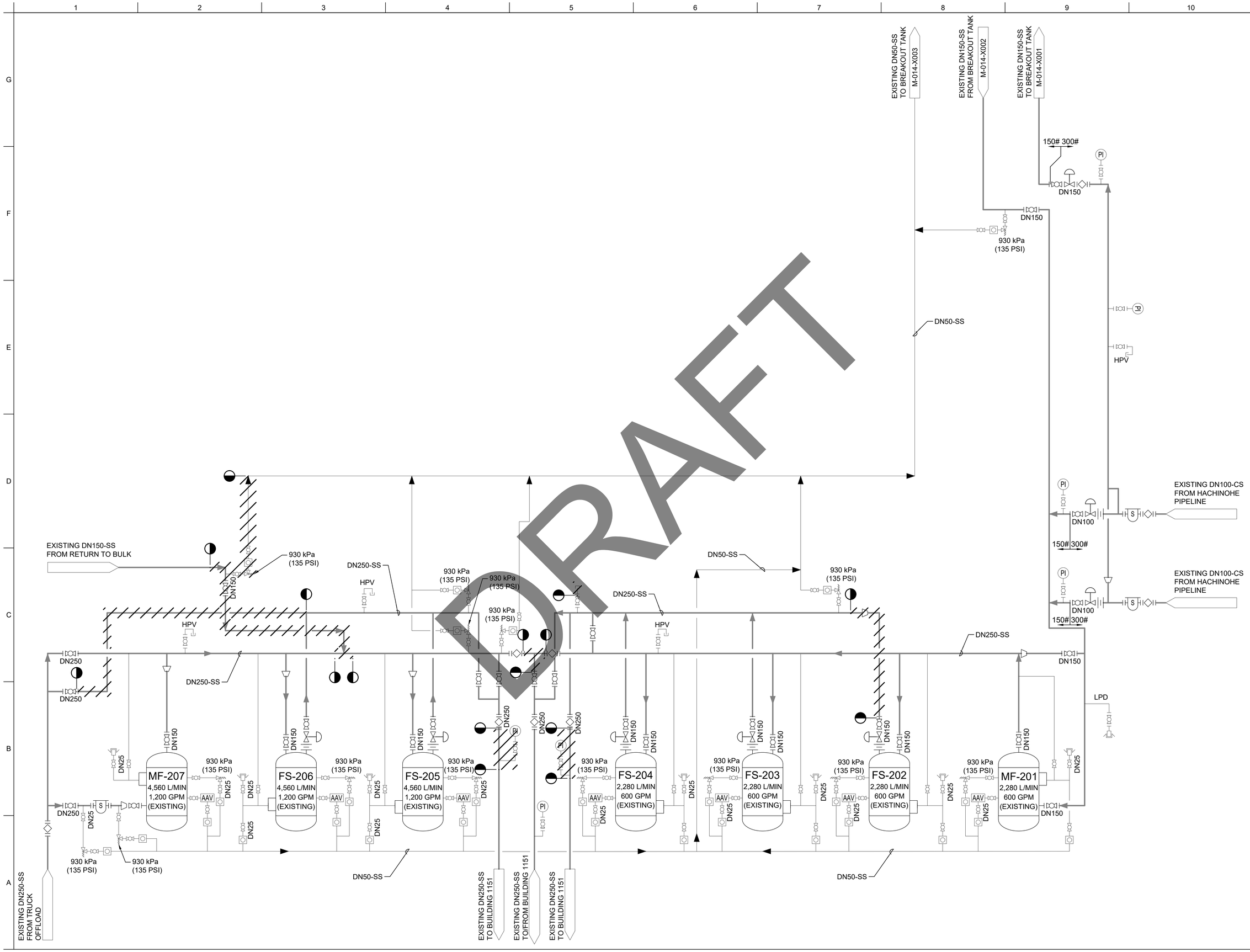

US Army Corps of Engineers®

MARK	DESCRIPTION	DATE

DESIGNED BY: C.SCHIERMAN
DRAWN BY: J.FOU
CHECKED BY: M.FRITZ
SUBMITTED BY: K.WARING
SIZE: ISO A1
ISSUE DATE: FEBRUARY 2022
SOLICITATION NO.: -
CONTRACT NO.: W912HV-17-D-0007
DRAWING CODE: -
FILE NAME: DESC20UX-M-010.dwg

U.S. ARMY CORPS OF ENGINEERS
POST OFFICE BOX 7002
APO AP 96343-5010

ENTERPRISE ENGINEERING, INC.
2400 CARDWELL STREET
SUITE 200
ANCHORAGE, AK 99503

400 US ROUTE 1
NORTH SUITE B
FALMOUTH, ME 04105

DESC 20UX
INSTALL ADDITIVE INJECTION SYSTEM
MISAWA AIR BASE, JAPAN

FILTER BUILDING FLOW DIAGRAM (DEMOLITION)

SHEET ID
M-010

FILE: DESC20UX-M-010.dwg
DATE: 2/12/2021 2:30 PM
OPER:
SCALE:

IF SHEET IS LESS THAN 594 X 841 MM
REDUCED PRINT = USE GRAPHIC SCALES

RTA SUBMITTAL

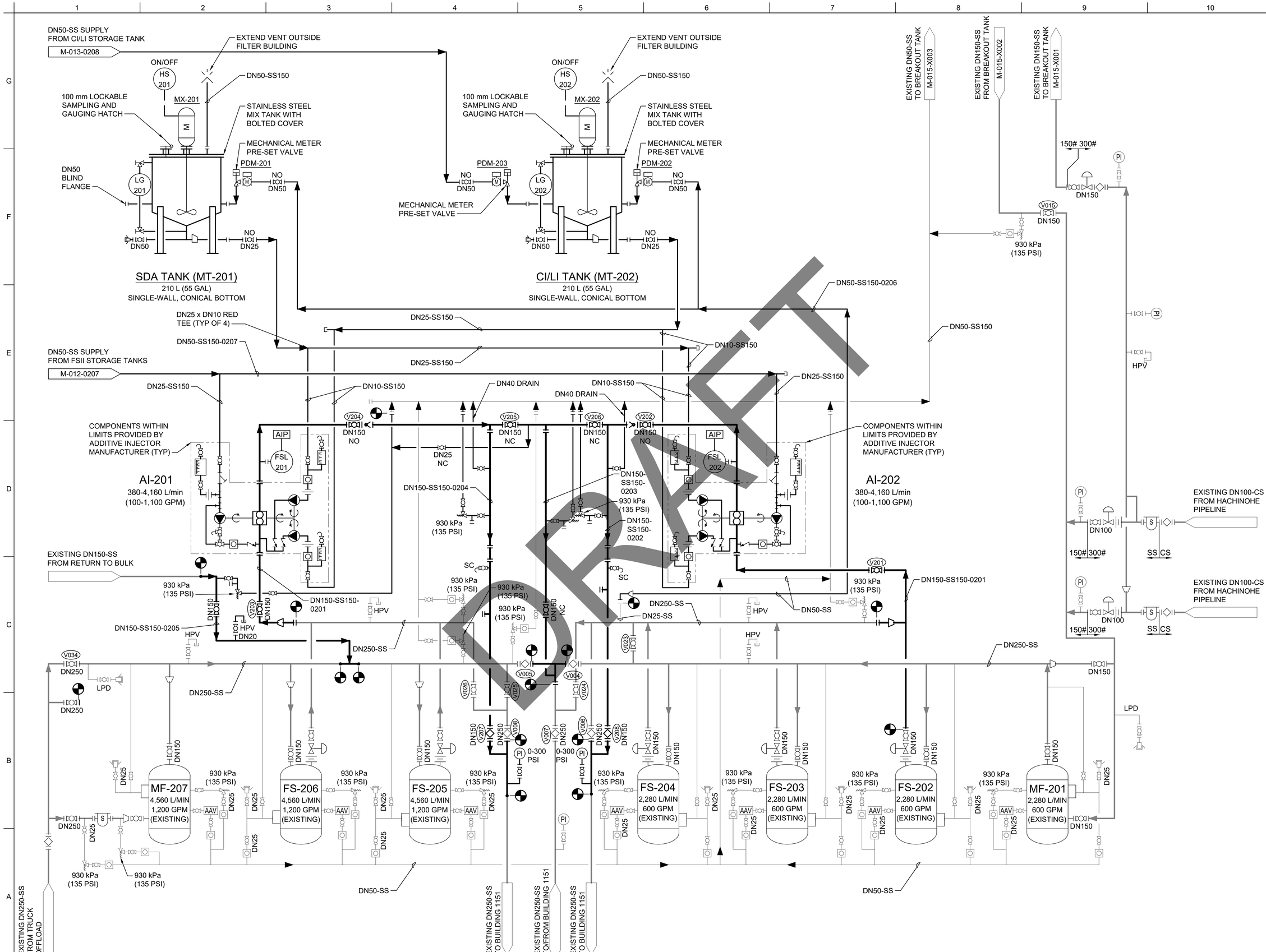

US Army Corps of Engineers®

MARK	DESCRIPTION	DATE

DESIGNED BY: C.SCHIEMAN
DRAWN BY: A.FULL
CHECKED BY: M.FRITZ
SUBMITTED BY: K.WARING
SIZE: ISO A1
FILE NAME: DESC20UX-M-011.dwg
ISSUE DATE: FEBRUARY 2022
SOLICITATION NO.: -
CONTRACT NO.: W912HV-17-D-0007
DRAWING CODE: -

U.S. ARMY CORPS OF ENGINEERS
POST OFFICE BOX 1500
APO AP 96343-5010

ENTERPRISE ENGINEERING, INC.
2600 CUSHMAN STREET
SUITE 200
ANCHORAGE, AK 99503

400 US ROUTE 1
NORTH SUITE B
FALMOUTH, ME 04105

DESC 20UX
INSTALL ADDITIVE INJECTION SYSTEM
MISAWA AIR BASE, JAPAN

NEW FILTER BUILDING FLOW DIAGRAM

SHEET ID
M-011

FILE: DESC20UX-M-011.dwg
DATE: 9/13/2021 9:03 AM
OPER:
SCALE:

IF SHEET IS LESS THAN 594 X 841 MM
REDUCED PRINT = USE GRAPHIC SCALES

RTA SUBMITTAL

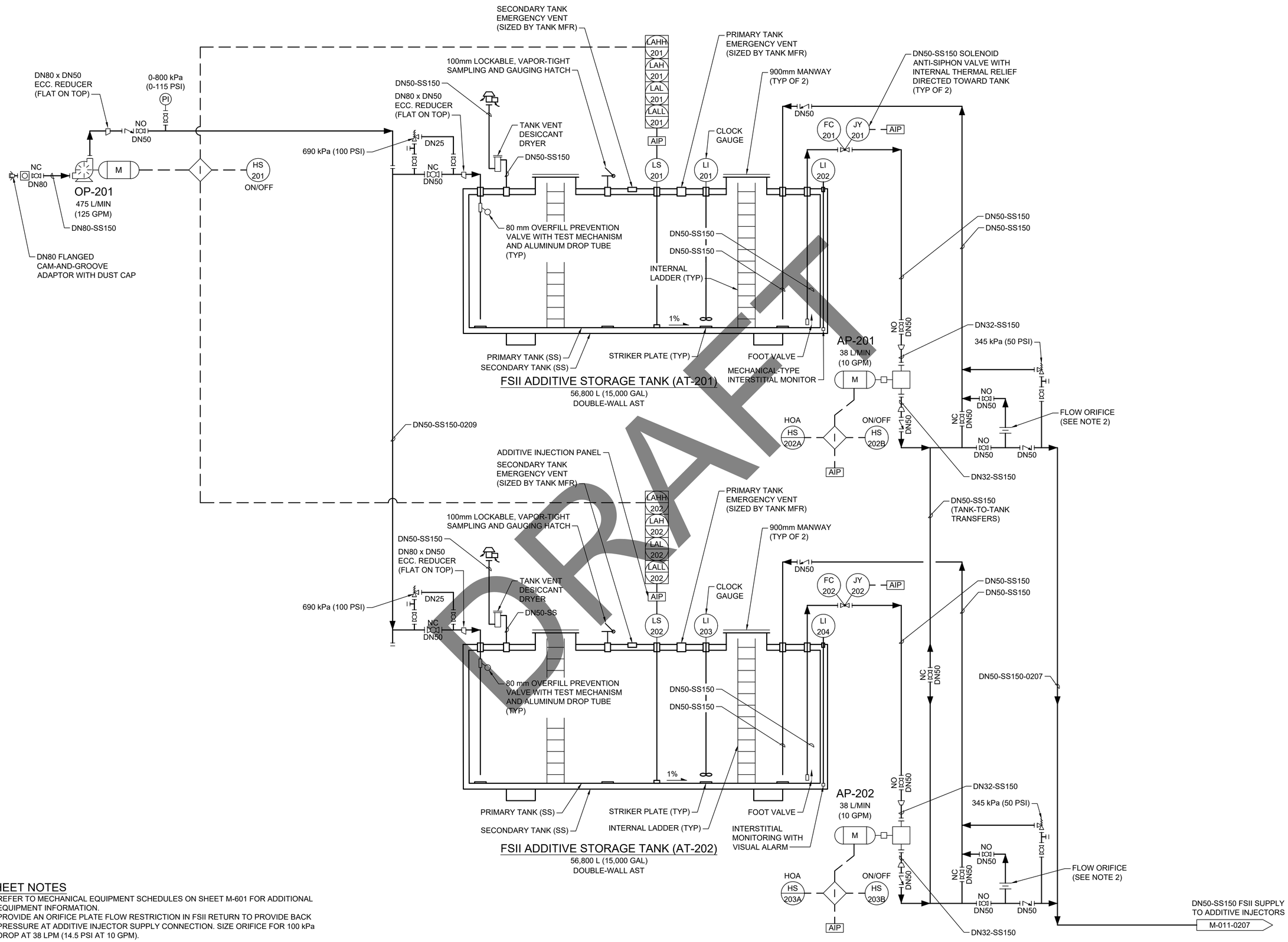

DRAFT

SHEET NOTES

1. REFER TO MECHANICAL EQUIPMENT SCHEDULES ON SHEET M-601 FOR ADDITIONAL EQUIPMENT INFORMATION.
2. PROVIDE AN ORIFICE PLATE FLOW RESTRICTION IN FSII RETURN TO PROVIDE BACK PRESSURE AT ADDITIVE INJECTOR SUPPLY CONNECTION. SIZE ORIFICE FOR 100 kPa DROP AT 38 LPM (14.5 PSI AT 10 GPM).

US Army Corps of Engineers®

MARK	DESCRIPTION	DATE

DESIGNED BY: C.SCHIERMAN
DRAWN BY: J.FOULU
CHECKED BY: M.FRITZ
SUBMITTED BY: K.WARING
SIZE: ISO A1
FILE NAME: DESC20UX-M-012.dwg
ISSUE DATE: FEBRUARY 2022
SOLICITATION NO.: -
CONTRACT NO.: W912HV-17-D-0007
DRAWING CODE: -

U.S. ARMY CORPS OF ENGINEERS
JAPAN DISTRICT
APO AP 96343-5010

ENTERPRISE ENGINEERING, INC.
2600 CORDELL STREET
SUITE 200
ANCHORAGE, AK 99503
400 US ROUTE 1
NORTH SUITE B
FALMOUTH, ME 04105

DESC 20UX
INSTALL ADDITIVE INJECTION SYSTEM
MISAWA AIR BASE, JAPAN

FSII ADDITIVE STORAGE FLOW DIAGRAM

SHEET ID
M-012

FILE: DESC20UX-M-012.dwg
DATE: 2/13/2021 2:18 PM
OPER:
SCALE:

IF SHEET IS LESS THAN 594 X 841 MM
REDUCED PRINT = USE GRAPHIC SCALES

RTA SUBMITTAL

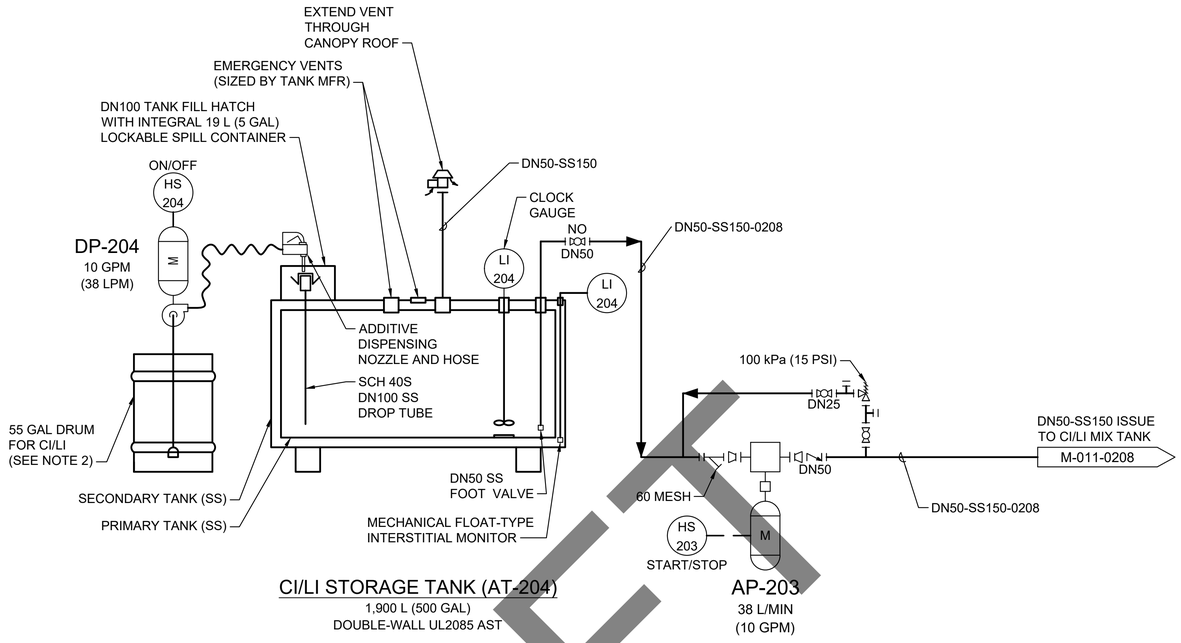

CI/LI STORAGE TANK (AT-204)
1,900 L (500 GAL)
DOUBLE-WALL UL2085 AST

AP-203
38 L/MIN
(10 GPM)

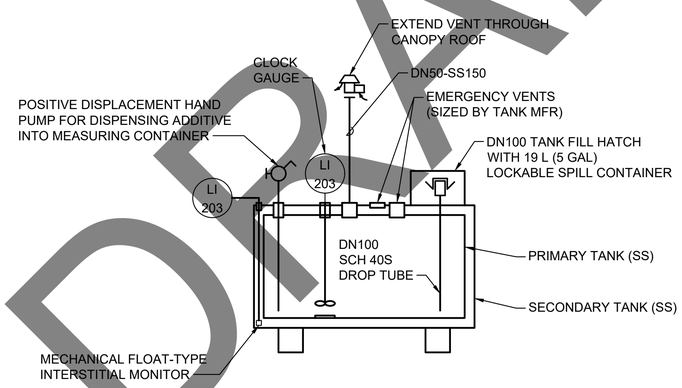

SDA STORAGE TANK (AT-203)
415 L (120 GAL)
DOUBLE-WALL UL 2085 AST

DRAFT

SHEET NOTES:

1. SDA WILL BE RECEIVED IN 1 GALLON (3.8 L) OR 5 GALLON (19 L) BUCKETS THAT ARE POURED DIRECTLY INTO THE SDA TANK. SDA CAN ALSO BE RECEIVED IN 55 GALLON (208 L) DRUMS THAT WILL REQUIRE A DRUM PUMP TO TRANSFER TO THE SDA STORAGE TANK (SDA DRUM PUMP IS NOT INCLUDED IN PROJECT).
2. CI/LI WILL BE RECEIVED IN 275 GALLON (1,040 L) OR 330 GALLON (1,250 L) INTERMEDIATE BULK CONTAINERS, OR 55 GALLON (208 L) DRUMS. THE CI/LI 55 GALLON DRUM IS SHOWN FOR ILLUSTRATION PURPOSES ONLY AND IS NOT A PERMANENT TANK FOR THE ADDITIVE MIXING SYSTEM. THE CI/LI DRUM PUMP SHOWN IS PROVIDED UNDER THIS PROJECT AND REMAINS WITH THE ADDITIVE MIXING SYSTEM.
3. REFER TO SHEET M-601 FOR EQUIPMENT SCHEDULES.

US Army Corps of Engineers®

MARK	DESCRIPTION	DATE

DESIGNED BY: C.SCHIERMAN
DRAWN BY: J.FOLL
CHECKED BY: M.FRITZ
SUBMITTED BY: K.WARING
SIZE: ISO A1
FILE NAME: DESC20UX-M-013.dwg
ISSUE DATE: FEBRUARY 2022
SOLICITATION NO.: -
CONTRACT NO.: W912HV-17-D-0007
DRAWING CODE: -

U.S. ARMY CORPS OF ENGINEERS
JAPAN DISTRICT
APO AP 96343-5010

ENTERPRISE ENGINEERING, INC.
2700 CHUGACH BELL STREET
SUITE 200
ANCHORAGE, AK 99503

400 US ROUTE 1
NORTH SUITE B
FALMOUTH, ME 04105

DESC 20UX
INSTALL ADDITIVE INJECTION SYSTEM
MISAWA AIR BASE, JAPAN

CI/LI AND SDA ADDITIVE STORAGE FLOW DIAGRAM

SHEET ID
M-013

FILE: DESC20UX-M-013.dwg
DATE: 2/13/2021 2:16 PM
OPER:
SCALE:

IF SHEET IS LESS THAN 594 X 841 MM
REDUCED PRINT = USE GRAPHIC SCALES

RTA SUBMITTAL

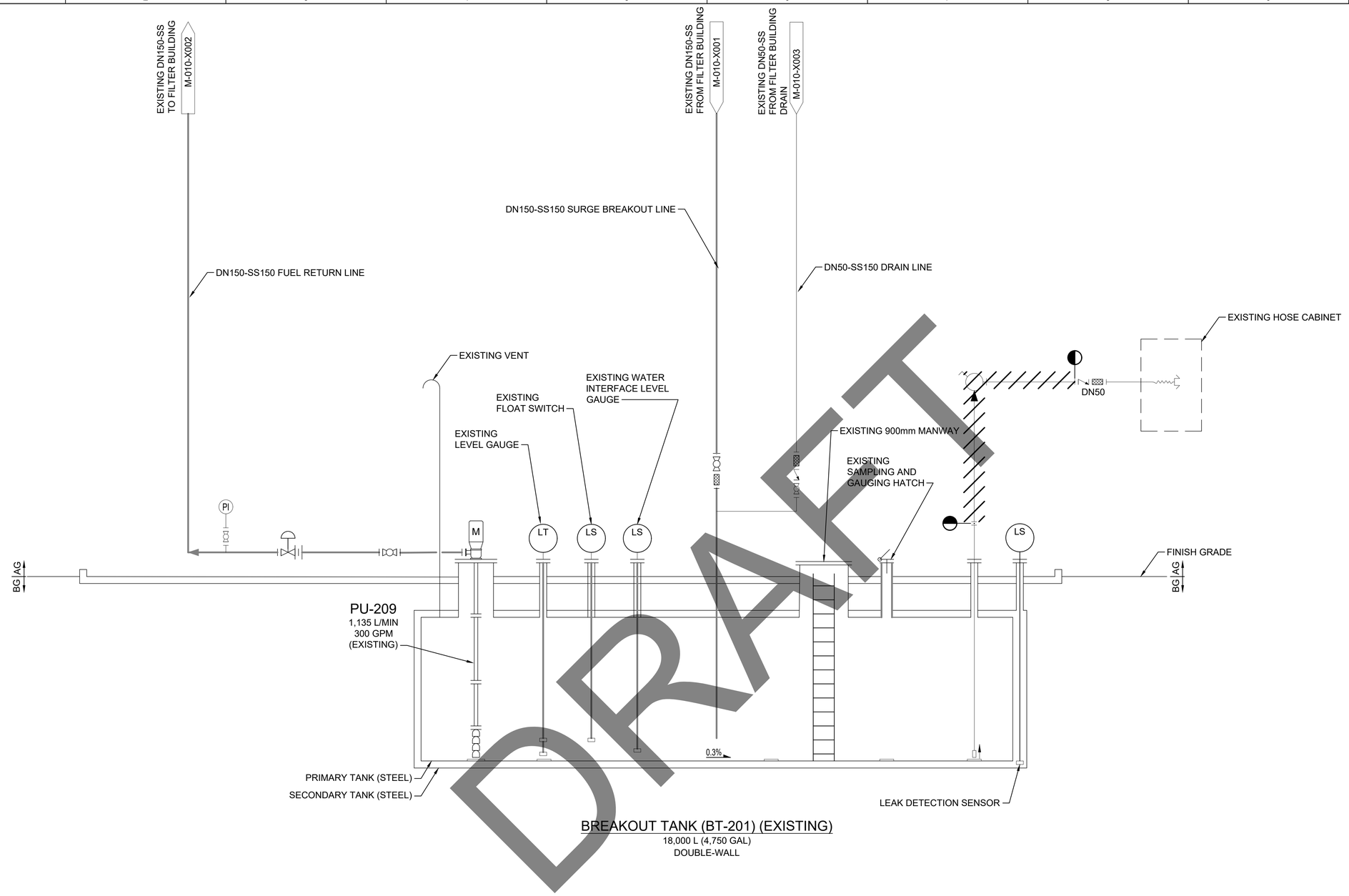

DRAFT

US Army Corps of Engineers®

MARK	DESCRIPTION	DATE

DESIGNED BY: C.SCHIERMAN
DRAWN BY: J.FOU
CHECKED BY: M.FRITZ
SUBMITTED BY: K.WARING
SIZE: ISO A1
ISSUE DATE: FEBRUARY 2022
SOLICITATION NO.: -
CONTRACT NO.: W912HV-17-D-0007
DRAWING CODE: -
FILE NAME: DESC20UX-M-014.dwg

U.S. ARMY CORPS OF ENGINEERS
JAPAN DISTRICT
APO AP 96343-5010

ENTERPRISE ENGINEERING, INC.
2600 CUSHMAN STREET
SUITE 200
ANCHORAGE, AK 99503

400 US ROUTE 1
NORTH SUITE B
FALMOUTH, ME 04105

DESC 20UX
INSTALL ADDITIVE INJECTION SYSTEM
MISAWA AIR BASE, JAPAN

BREAKOUT TANK REMOVALS FLOW DIAGRAM

SHEET ID

M-014

FILE: DESC20UX-M-014.dwg
DATE: 12/18/2020 11:35 AM
OPER:
SCALE:

IF SHEET IS LESS THAN 594 X 841 MM
REDUCED PRINT = USE GRAPHIC SCALES

RTA SUBMITTAL

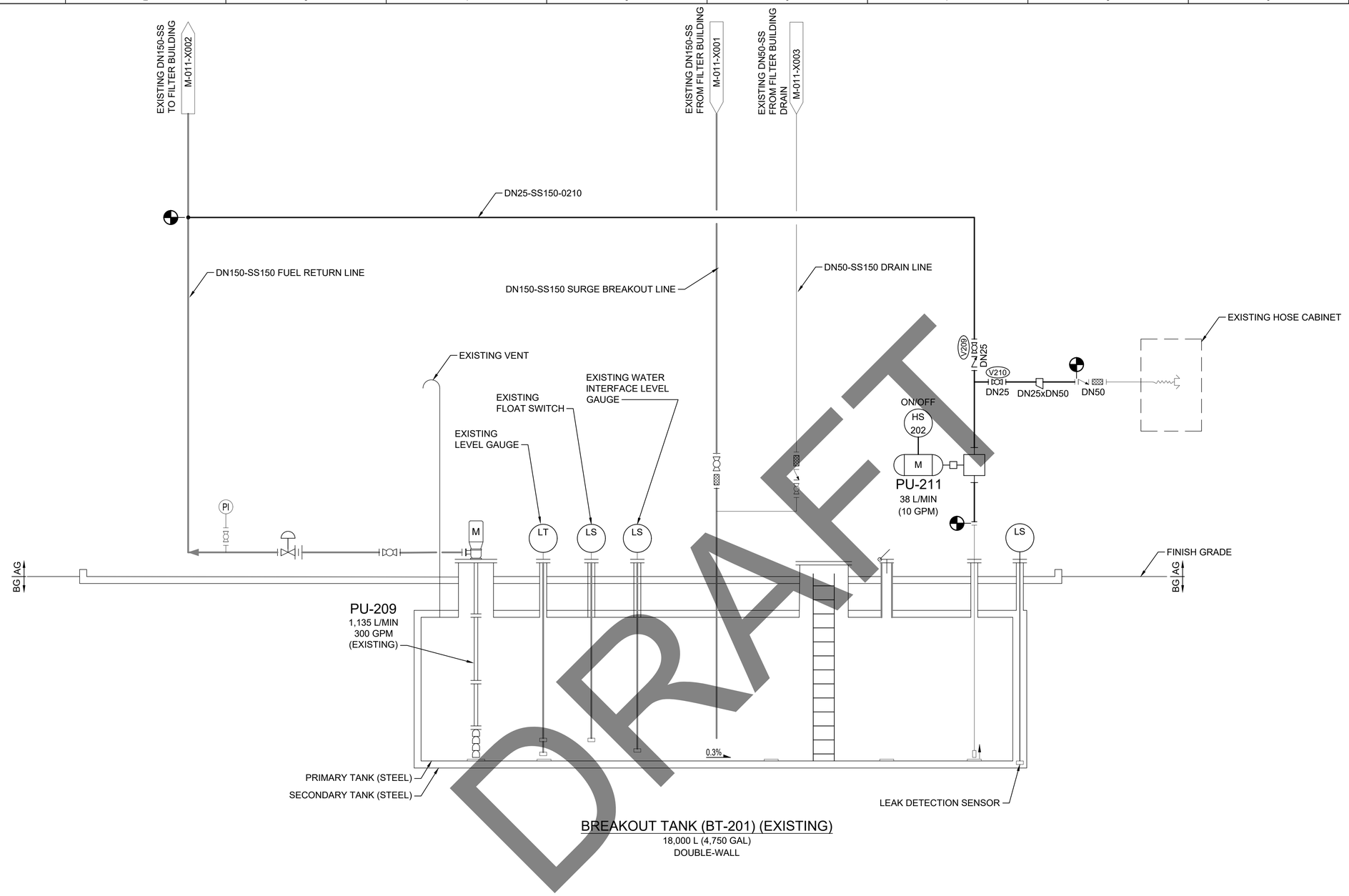

DRAFT

US Army Corps of Engineers®

MARK	DESCRIPTION	DATE

DESIGNED BY: C.SCHIERMAN
DRAWN BY: J.FOULI
CHECKED BY: M.FRITZ
SUBMITTED BY: K.WARING
SIZE: ISO A1
ISSUE DATE: FEBRUARY 2022
SOLICITATION NO.: -
CONTRACT NO.: W912HV-17-D-0007
DRAWING CODE: -
FILE NAME: DESC20UX-M-015.dwg

U.S. ARMY CORPS OF ENGINEERS
JAPAN DISTRICT
APO AP 96343-5010

ENTERPRISE ENGINEERING, INC.
2600 CUSHMAN STREET
SUITE 200
ANCHORAGE, AK 99503

400 US ROUTE 1
NORTH SUITE B
FALMOUTH, ME 04105

DESC 20UX
INSTALL ADDITIVE INJECTION SYSTEM
MISAWA AIR BASE, JAPAN

BREAKOUT TANK FLOW DIAGRAM

SHEET ID

M-015

FILE: DESC20UX-M-015.dwg
DATE: 2/12/2021 1:02 PM
OPER:
SCALE:

IF SHEET IS LESS THAN 594 X 841 MM
REDUCED PRINT = USE GRAPHIC SCALES

RTA SUBMITTAL

SHEET NOTES

1. PHASE DEMOLITION AND CONSTRUCTION TO MINIMIZE INTERRUPTION TO FUEL RECEIPT OPERATIONS.
2. COORDINATE DOWNTIME OF THE RECEIPT PIPING SYSTEM WITH THE GOVERNMENT, REFER GENERAL MECHANICAL NOTE 12 ON SHEET M-001 FOR SYSTEM DOWNTIME AND NOTIFICATION REQUIREMENTS.
3. REFER TO FLOW DIAGRAM SHEET M-010 FOR DEMOLITION WORK WITHIN BUILDING 1150. REFER TO FLOW DIAGRAM SHEET M-014 FOR DEMOLITION AT THE EXISTING BREAKOUT TANK (BT-201).
4. FIELD VERIFY LIMITS OF DEMOLITION.

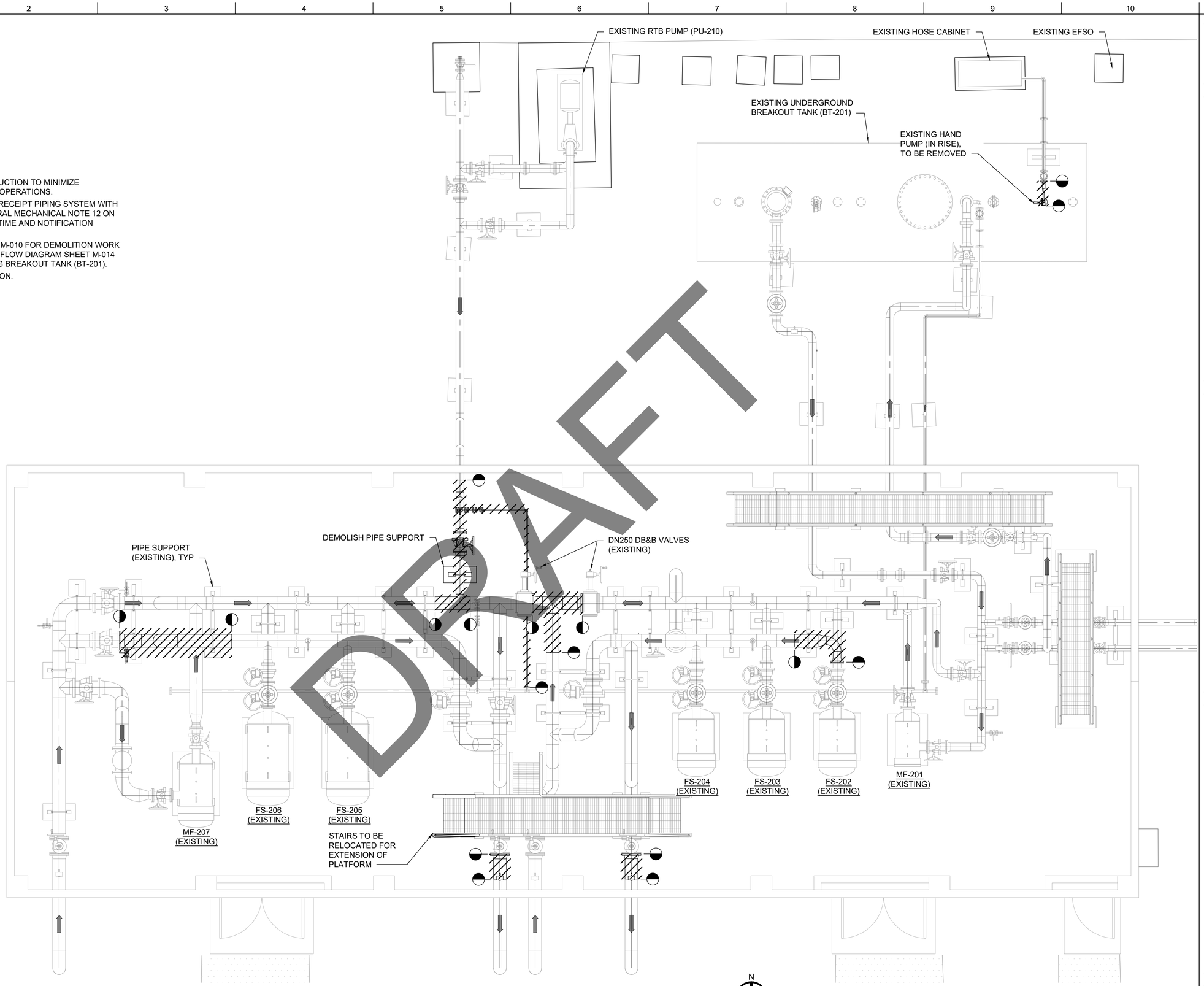

BUILDING 1150 PIPING DEMOLITION PLAN

SCALE: 1:40

0 1 2m

US Army Corps of Engineers®

MARK	DESCRIPTION	DATE

DESIGNED BY: C. SCHIERMAN
DRAWN BY: C. SCHIERMAN
CHECKED BY: M. FRITZ
SUBMITTED BY: K. WARING
SIZE: ISO A1
FILE NAME: DESC20UX-MD101.dwg
ISSUE DATE: FEBRUARY 2022
SOLICITATION NO.: -
CONTRACT NO.: W912HV-17-D-0007
DRAWING CODE: -

U.S. ARMY CORPS OF ENGINEERS
JAPAN DISTRICT
APO AP 96343-5010

ENTERPRISE ENGINEERING, INC.
400 US ROUTE 1
NORTH SUITE B
FALMOUTH, ME 04105
2700 CUSHMAN STREET
SUITE 200
ANCHORAGE, AK 99503

DESC 20UX
INSTALL ADDITIVE INJECTION SYSTEM
MISAWA AIR BASE, JAPAN

BUILDING 1150 PIPING DEMOLITION PLAN

SHEET ID

MD101

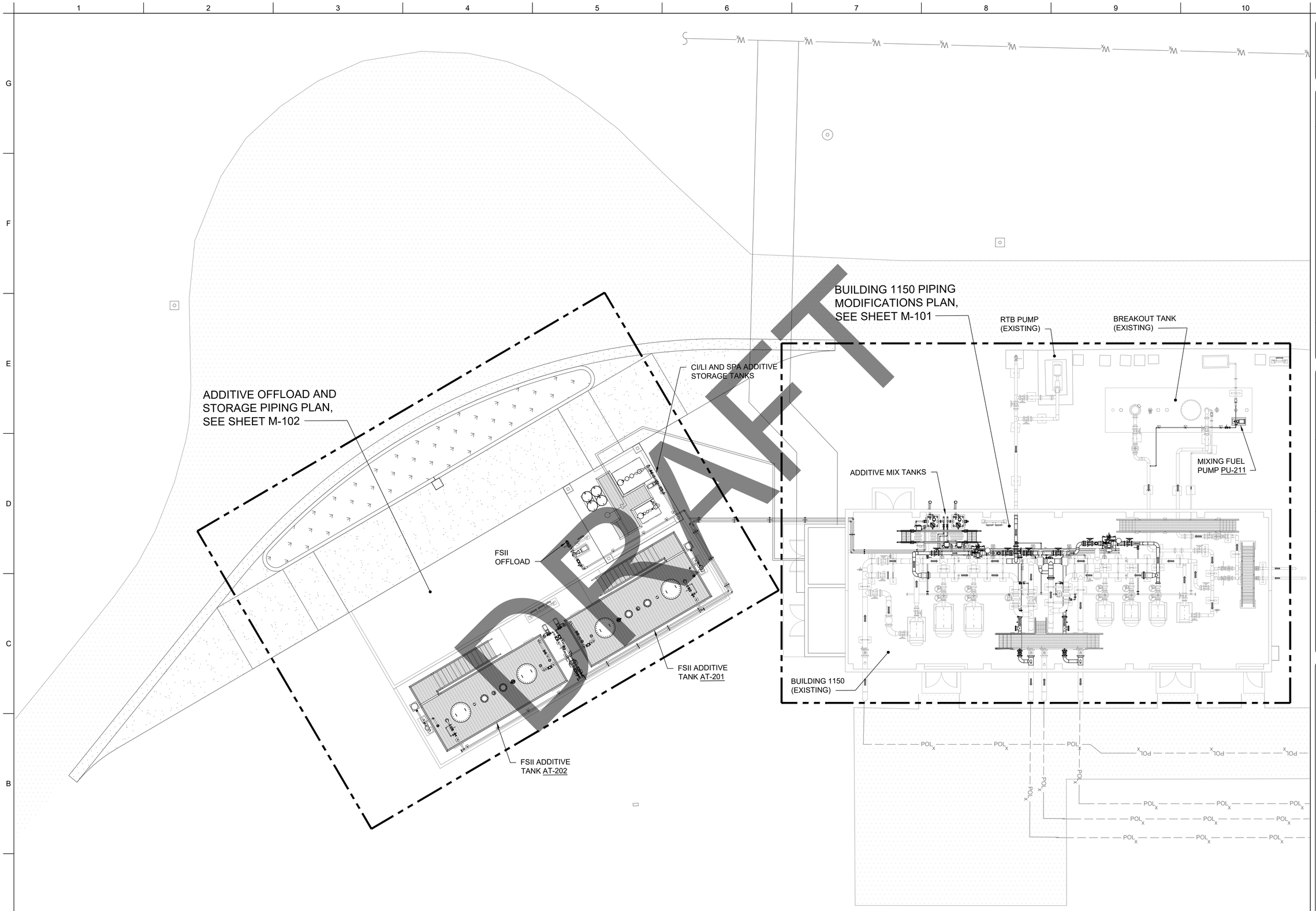

DRAFT

BUILDING 1150 OVERALL SITE PLAN

SCALE: 1:100

US Army Corps of Engineers®

MARK	DESCRIPTION	DATE

ISSUE DATE: FEBRUARY 2022
SOLICITATION NO.: -
CONTRACT NO.: W912HV-17-D-0007
DRAWING CODE: -
DESIGNED BY: C. SCHIERMAN
DRAWN BY: C. SCHIERMAN
CHECKED BY: M. FRITZ
SUBMITTED BY: K. WARING
SIZE: ISO A1
FILE NAME: DESC20UX-MS101.dwg

U.S. ARMY CORPS OF ENGINEERS
JAPAN DISTRICT
APO AP 96343-5010

ENTERPRISE ENGINEERING, INC.
2600 CUSHMAN STREET
SUITE 200
ANCHORAGE, AK 99503

400 US ROUTE 1
NORTH SUITE B
FALMOUTH, ME 04105

DESC 20UX
INSTALL ADDITIVE INJECTION SYSTEM
MISAWA AIR BASE, JAPAN

BUILDING 1150 OVERALL SITE PLAN

SHEET ID

MS101

FILE: DESC20UX-MS101.dwg
DATE: 2/13/2021 2:32 PM
OPER:
SCALE:

IF SHEET IS LESS THAN 594 X 841 MM
REDUCED PRINT = USE GRAPHIC SCALES

RTA SUBMITTAL

SHEET NOTES

1. FIELD VERIFY DIMENSIONS PRIOR TO FABRICATION.
2. FIELD ROUTE PIPING AS REQUIRED TO AVOID CONFLICTS WITH EXISTING PIPE AND EQUIPMENT.
3. NOT ALL EXISTING SMALL BORE PIPING IS SHOWN FOR CLARITY. REFER TO FLOW DIAGRAMS FOR EXISTING SMALL BORE PIPE.
4. SMALL BORE (DN50 AND SMALLER) PIPE SUPPORT (INCLUDING PS-C1) SPACING MUST NOT EXCEED 2 METERS. ALL OTHER PIPE SUPPORTS MUST BE LOCATED AS SHOWN.

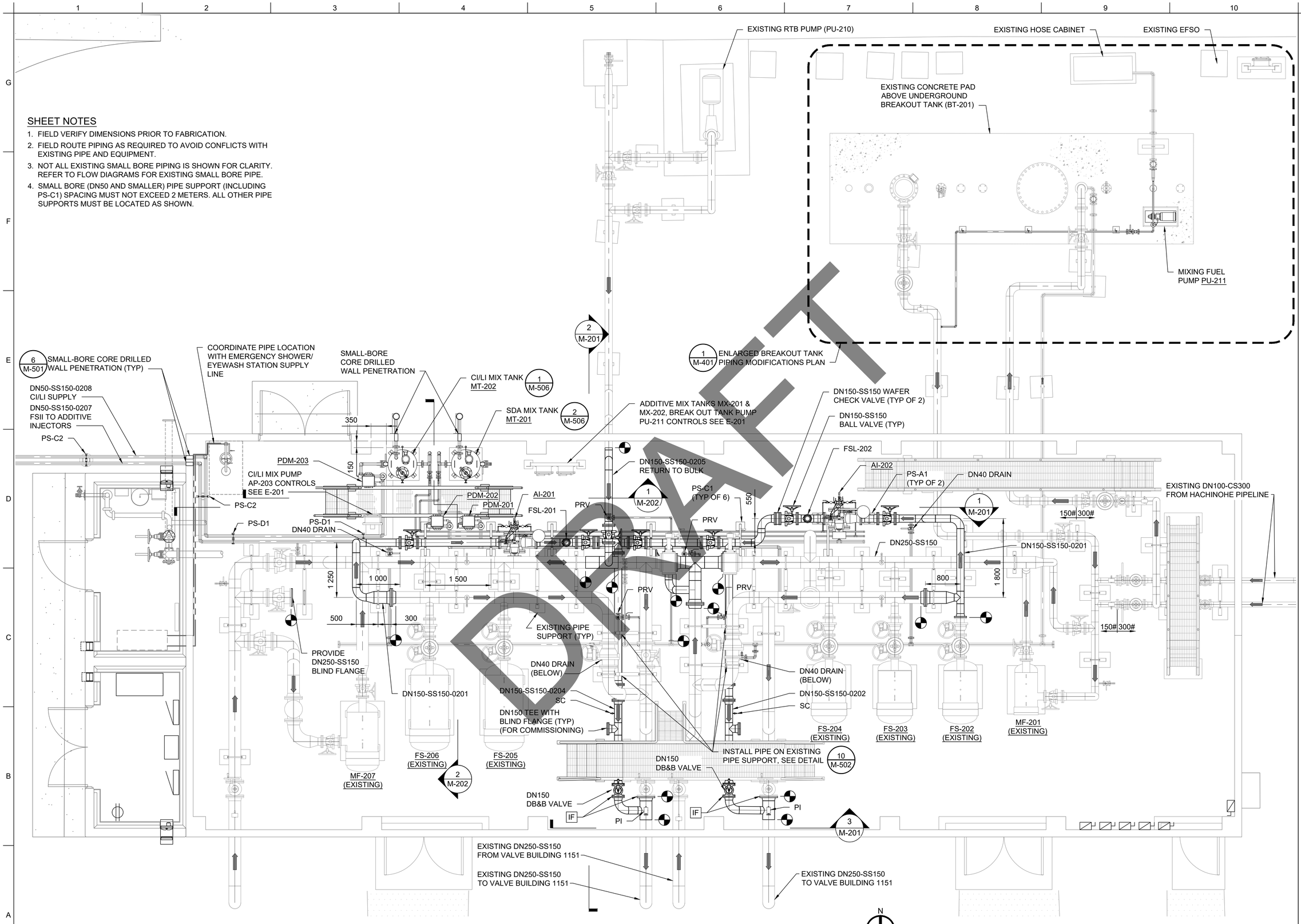

BUILDING 1150 PIPING MODIFICATIONS PLAN

SCALE: 1:40

0 1 2m

DRAFT

US Army Corps of Engineers®

MARK	DESCRIPTION	DATE

DESIGNED BY: C. SCHIERMAN
DRAWN BY: D. SCHIERMAN
CHECKED BY: M. FRITZ
SUBMITTED BY: K. WARING
SIZE: ISO A1
ISSUE DATE: FEBRUARY 2022
SOLICITATION NO.: -
CONTRACT NO.: W912HV-17-D-0007
DRAWING CODE: -
FILE NAME: DESC20UX-M-101.dwg

U.S. ARMY CORPS OF ENGINEERS
POL & CHEMICALS DIVISION
APO AP 96343-5010

ENTERPRISE ENGINEERING, INC.
2600 CUSHMAN STREET
SUITE 200
ANCHORAGE, AK 99503

400 US ROUTE 1
NORTH SUITE B
FALMOUTH, ME 04105

DESC 20UX
INSTALL ADDITIVE INJECTION SYSTEM
MISAWA AIR BASE, JAPAN

BUILDING 1150 PIPING MODIFICATIONS PLAN

SHEET ID

M-101

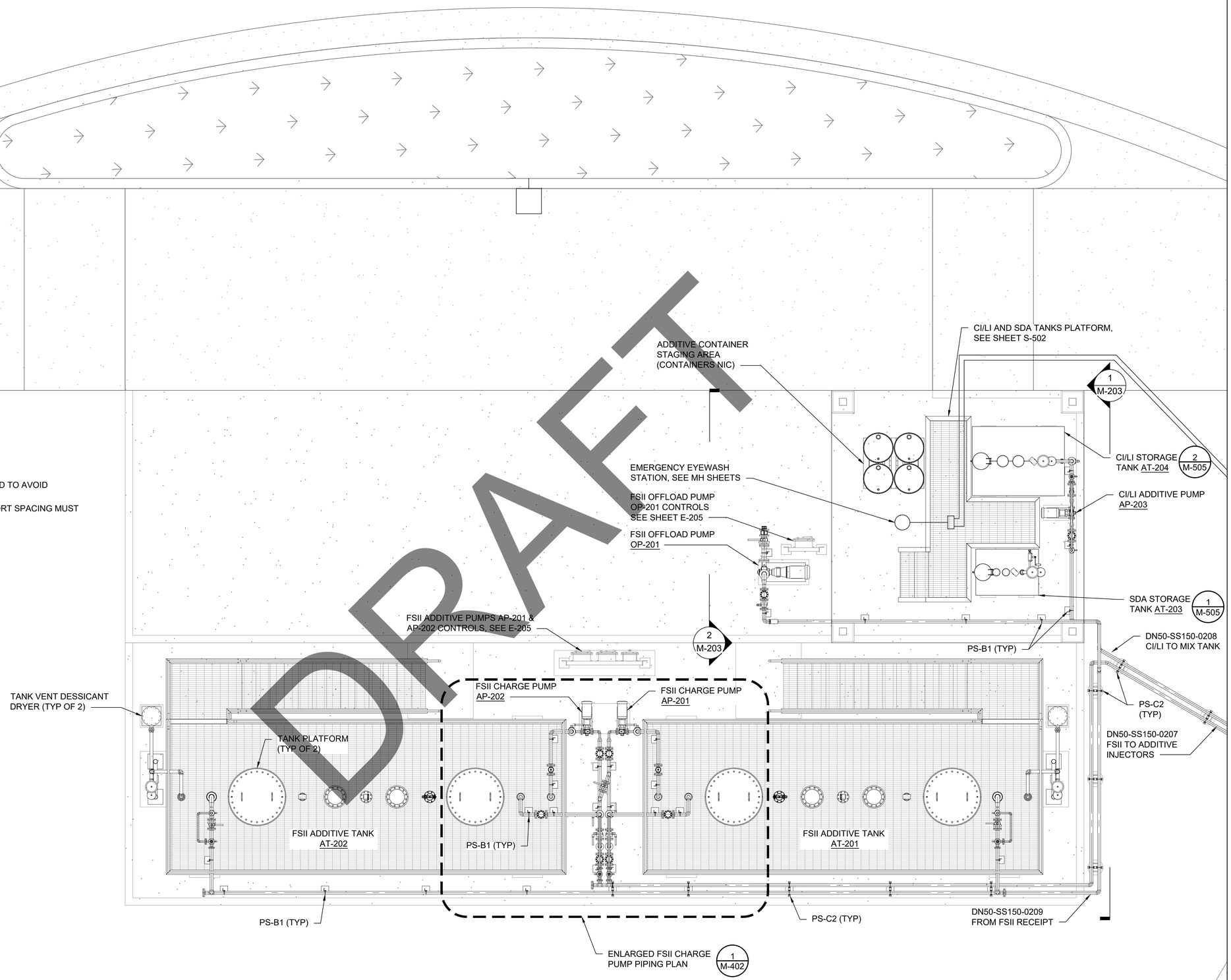

DRAFT

SHEET NOTES

1. FIELD ROUTE SMALL BORE PIPING AS REQUIRED TO AVOID CONFLICTS WITH PIPING AND EQUIPMENT.
2. SMALL BORE (DN50 AND SMALLER) PIPE SUPPORT SPACING MUST NOT EXCEED 2 METERS.

ADDITIVE OFFLOAD AND STORAGE PIPING PLAN

SCALE: 1:40

0 1 2m

US Army Corps of Engineers®

MARK	DESCRIPTION	DATE

ISSUE DATE: FEBRUARY 2022
SOLICITATION NO.: -
CONTRACT NO.: W912HV-17-D-0007
DRAWING CODE: -
DESIGNED BY: C. SCHIERMAN
DRAWN BY: C. SCHIERMAN
CHECKED BY: M. FRITZ
SUBMITTED BY: K. WARING
SIZE: ISO A1
FILE NAME: DESC20UX-M-102.dwg

U.S. ARMY CORPS OF ENGINEERS
ALASKA DISTRICT
APO AP 96343-5010

ENTERPRISE ENGINEERING, INC.
2800 CUSHMAN STREET
SUITE 200
ANCHORAGE, AK 99503

400 US ROUTE 1
NORTH SUITE B
FALMOUTH, ME 04105

DESC 20UX
INSTALL ADDITIVE INJECTION SYSTEM
MISAWA AIR BASE, JAPAN

ADDITIVE OFFLOAD AND STORAGE PIPING PLAN

SHEET ID

M-102

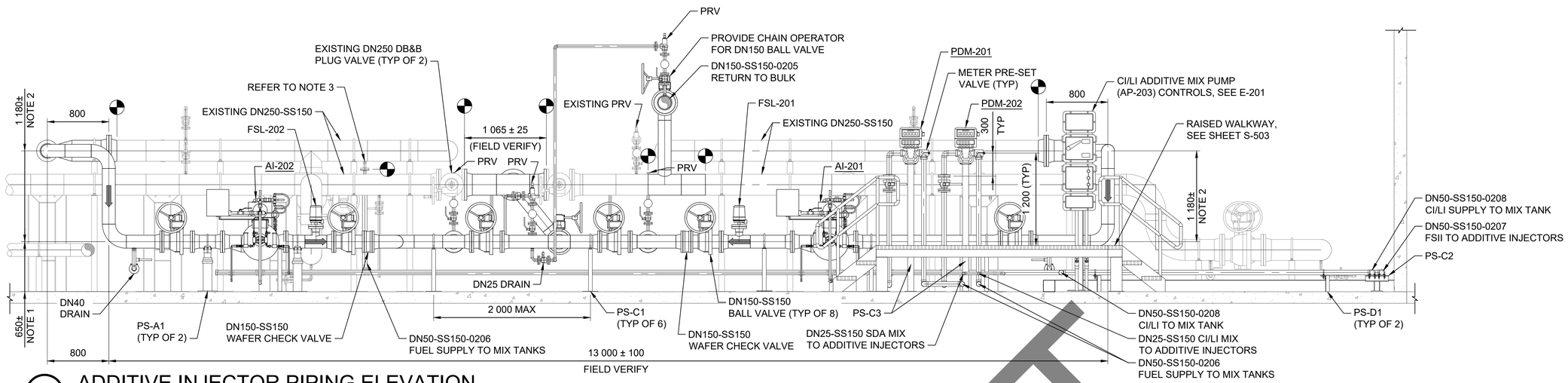

1 ADDITIVE INJECTOR PIPING ELEVATION
SCALE: 1:30

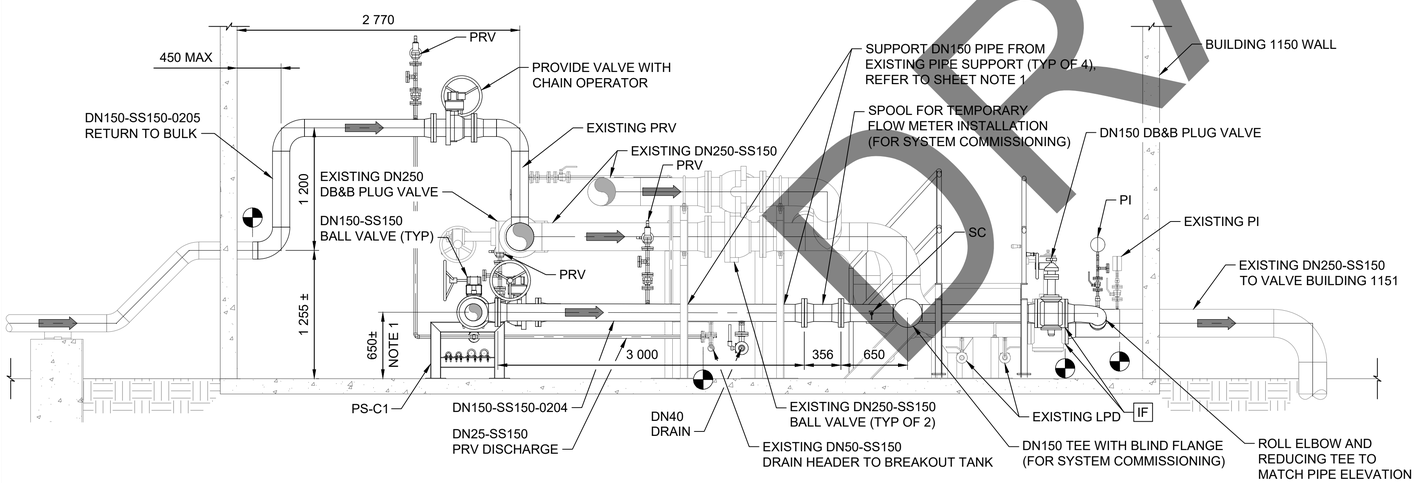

2 RTB AND ADDITIVE INJECTOR DISCHARGE PIPING ELEVATION
SCALE: 1:30

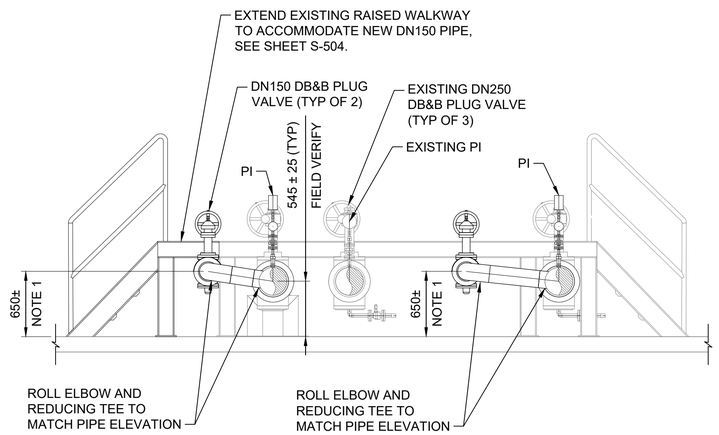

3 TRANSFER PIPING TIE-IN ELEVATION
SCALE: 1:30

SHEET NOTES:

1. FIELD VERIFY HEIGHT. COORDINATE HEIGHT WITH PIPE LAYOUT ON EXISTING PIPE SUPPORT CROSS-MEMBER. REFER TO DETAIL 10/M-502.
2. FIELD VERIFY DIMENSION REQUIRED TO MATCH EXISTING FILTER/ SEPARATOR DISCHARGE PIPE HEADER ELEVATION.
3. REMOVE EXISTING DN25 DRAIN CONNECTION ON FILTER/ SEPARATOR DISCHARGE HEADER AND PROVIDE DN50 PIPE CONNECTION FOR MIX TANK FUEL SUPPLY.
4. FIELD VERIFY ALL DIMENSION PRIOR TO FABRICATION.

DRAFT

US Army Corps of Engineers®

MARK	DESCRIPTION	DATE

DESIGNED BY: C.SCHIEWMAN
DRAWN BY: C.SCHIEWMAN
CHECKED BY: M.FRITZ
SUBMITTED BY: K.WARING
SIZE: ISO A1
ISSUE DATE: FEBRUARY 2022
SOLICITATION NO.: -
CONTRACT NO.: W912HV-17-D-0007
DRAWING CODE: -
FILE NAME: DESC20UX-M-201.dwg

U.S. ARMY CORPS OF ENGINEERS
POA-ASTOC-CD
APO AP 96343-5010

ENTERPRISE ENGINEERING, INC.
2550 CARDWELL STREET
SUITE 200
ANCHORAGE, AK 99503
400 US ROUTE 1
NORTH SUITE B
FALMOUTH, ME 04105

DESC 20UX
INSTALL ADDITIVE INJECTION SYSTEM
MISAWA AIR BASE, JAPAN

BUILDING 1150 PIPING ELEVATIONS 1

SHEET ID
M-201

FILE: DESC20UX-M-201.dwg
DATE: 9/10/2021 3:00 PM OPER: SCALE:

IF SHEET IS LESS THAN 594 X 841 MM
REDUCED PRINT = USE GRAPHIC SCALES

RTA SUBMITTAL

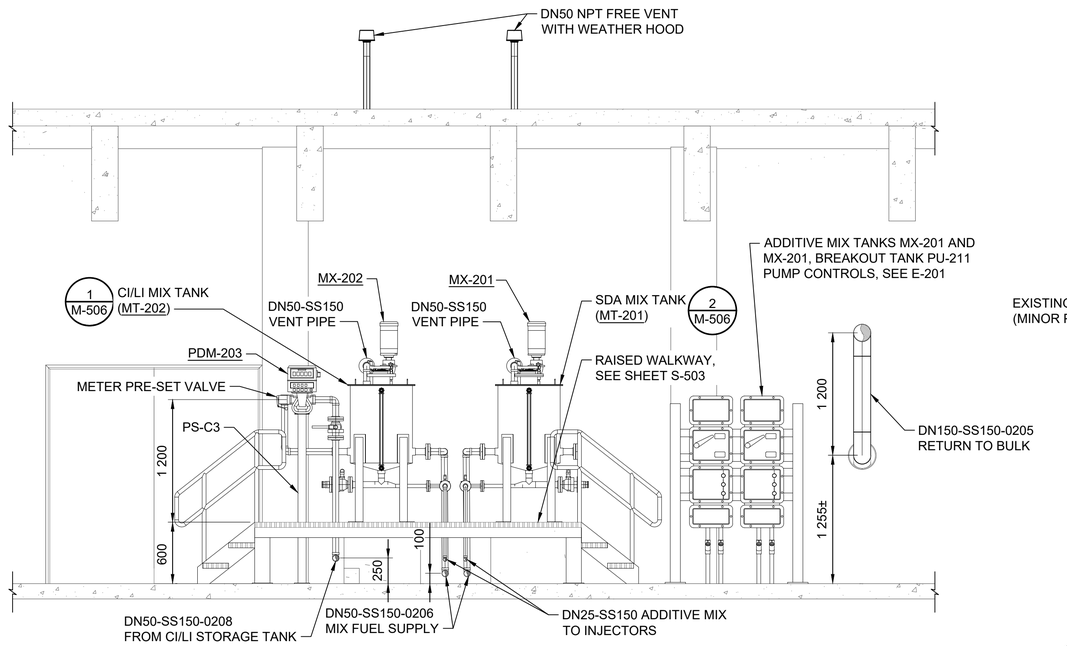

1 ADDITIVE MIX TANK PIPING ELEVATION 1

SCALE: 1:30

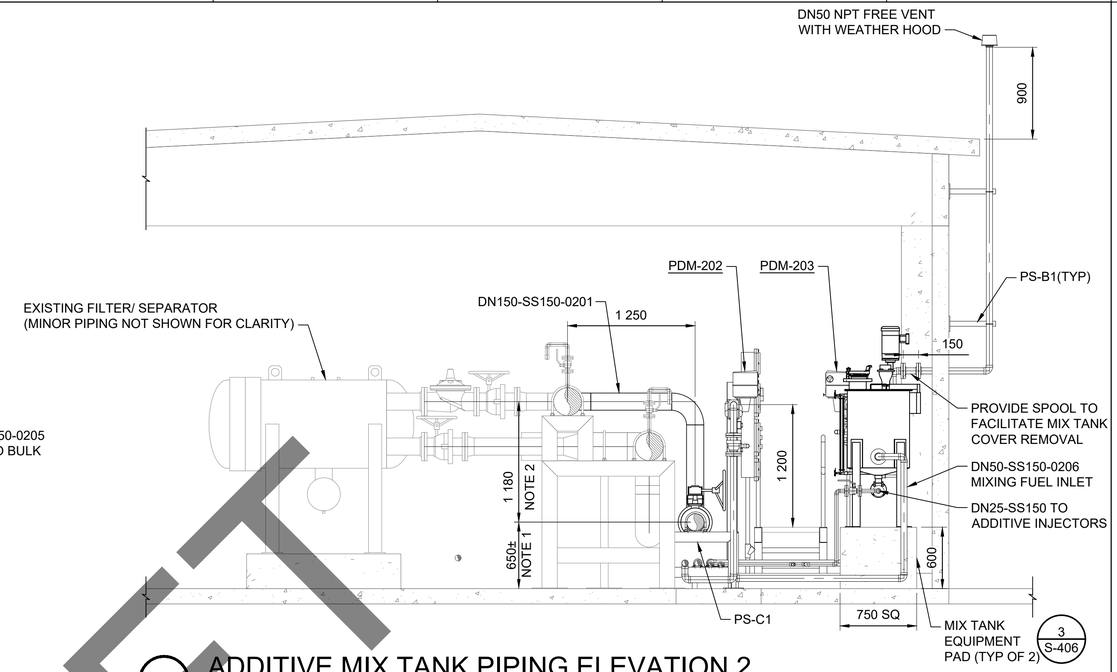

2 ADDITIVE MIX TANK PIPING ELEVATION 2

SCALE: 1:30

DRAFT

SHEET NOTES:

1. FIELD VERIFY HEIGHT. COORDINATE HEIGHT WITH PIPE LAYOUT ON EXISTING PIPE SUPPORT CROSS-MEMBER. REFER TO DETAIL 10/M-502.
2. FIELD VERIFY DIMENSION REQUIRED TO MATCH EXISTING FILTER/ SEPARATOR DISCHARGE PIPE HEADER ELEVATION.
3. FIELD VERIFY ALL DIMENSION PRIOR TO FABRICATION.

US Army Corps of Engineers®

MARK	DESCRIPTION	DATE

ISSUE DATE: FEBRUARY 2022
SOLICITATION NO.: -
CONTRACT NO.: W912HV-17-D-0007
DRAWING CODE: -
FILE NAME: DESC20UX-M-202.dwg

DESIGNED BY: C.SCHIENMAN
DRAWN BY: C.SCHIENMAN
CHECKED BY: M.FRITZ
SUBMITTED BY: K.WARING
SIZE: ISO A1

U.S. ARMY CORPS OF ENGINEERS
JAPAN DISTRICT
APO AP 96343-5010

ENTERPRISE ENGINEERING, INC.
400 US ROUTE 1
NORTH SUITE B
FALMOUTH, ME 04105
2550 CARDELL STREET
SUITE 200
ANCHORAGE, AK 99503

DESC 20UX
INSTALL ADDITIVE INJECTION SYSTEM
MISAWA AIR BASE, JAPAN

BUILDING 1150 PIPING ELEVATIONS 2

SHEET ID

M-202

FILE: DESC20UX-M-202.dwg
DATE: 2/12/2021 12:33 PM
OPER:
SCALE:

IF SHEET IS LESS THAN 594 X 841 MM
REDUCED PRINT = USE GRAPHIC SCALES

RTA SUBMITTAL

SHEET NOTES:

1. IF CANOPY BID OPTION IS NOT AWARDED, TERMINATE TANK VENT 3.6m ABOVE GRADE.
2. FIELD VERIFY ALL DIMENSION PRIOR TO FABRICATION.

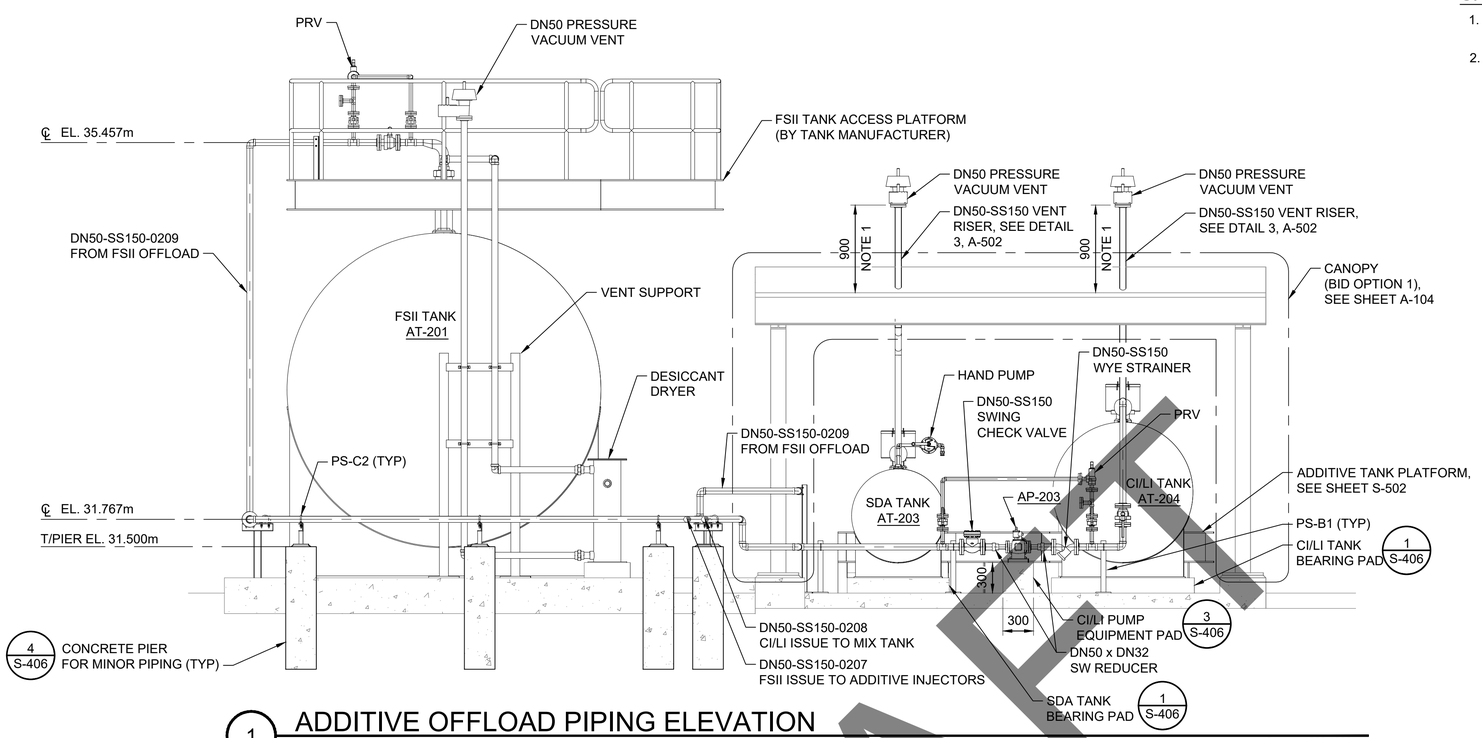

1 ADDITIVE OFFLOAD PIPING ELEVATION
SCALE: 1:30

0 500 1000mm

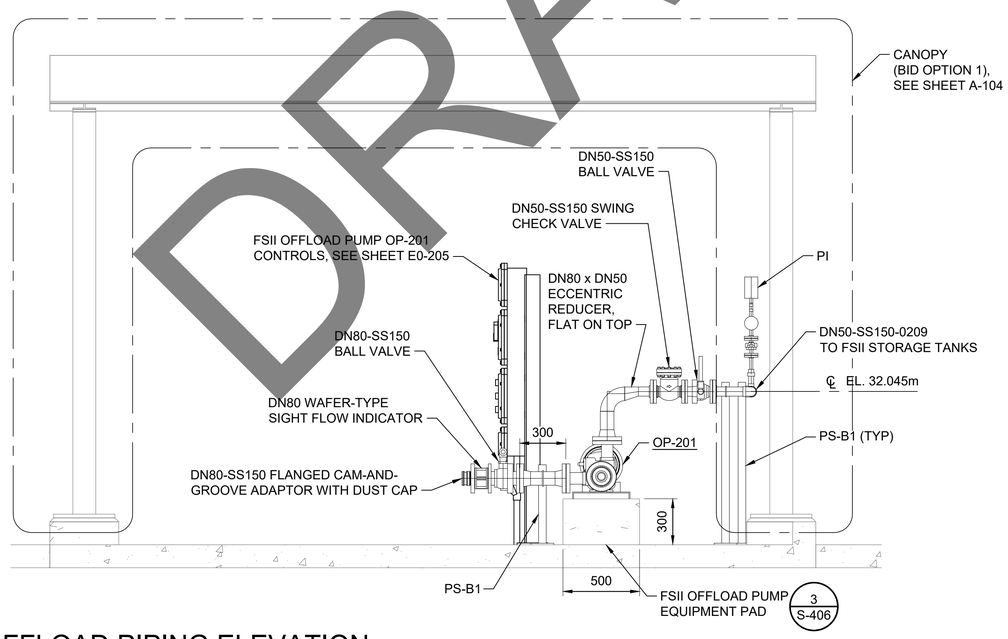

2 FSII OFFLOAD PIPING ELEVATION
SCALE: 1:20

0 500 1000mm

DRAFT

US Army Corps of Engineers®

MARK	DESCRIPTION	DATE

ISSUE DATE: FEBRUARY 2022
SOLICITATION NO.: -
CONTRACT NO.: W912HV-17-D-0007
DRAWING CODE: -
FILE NAME: DESC20UX-M-203.dwg

DESIGNED BY: C.SCHIENMAN
DRAWN BY: C.SCHIENMAN
CHECKED BY: M.FRITZ
SUBMITTED BY: K.WARING
SIZE: ISO A1

U.S. ARMY CORPS OF ENGINEERS
JAPAN DISTRICT
APO AP 96343-5010

ENTERPRISE ENGINEERING, INC.
2600 CAMPBELL STREET
SUITE 200
ANCHORAGE, AK 99503

400 US ROUTE 1
NORTH SUITE B
FALMOUTH, ME 04105

DESC 20UX
INSTALL ADDITIVE INJECTION SYSTEM
MISAWA AIR BASE, JAPAN

ADDITIVE OFFLOAD AND STORAGE PIPING ELEVATIONS

SHEET ID
M-203

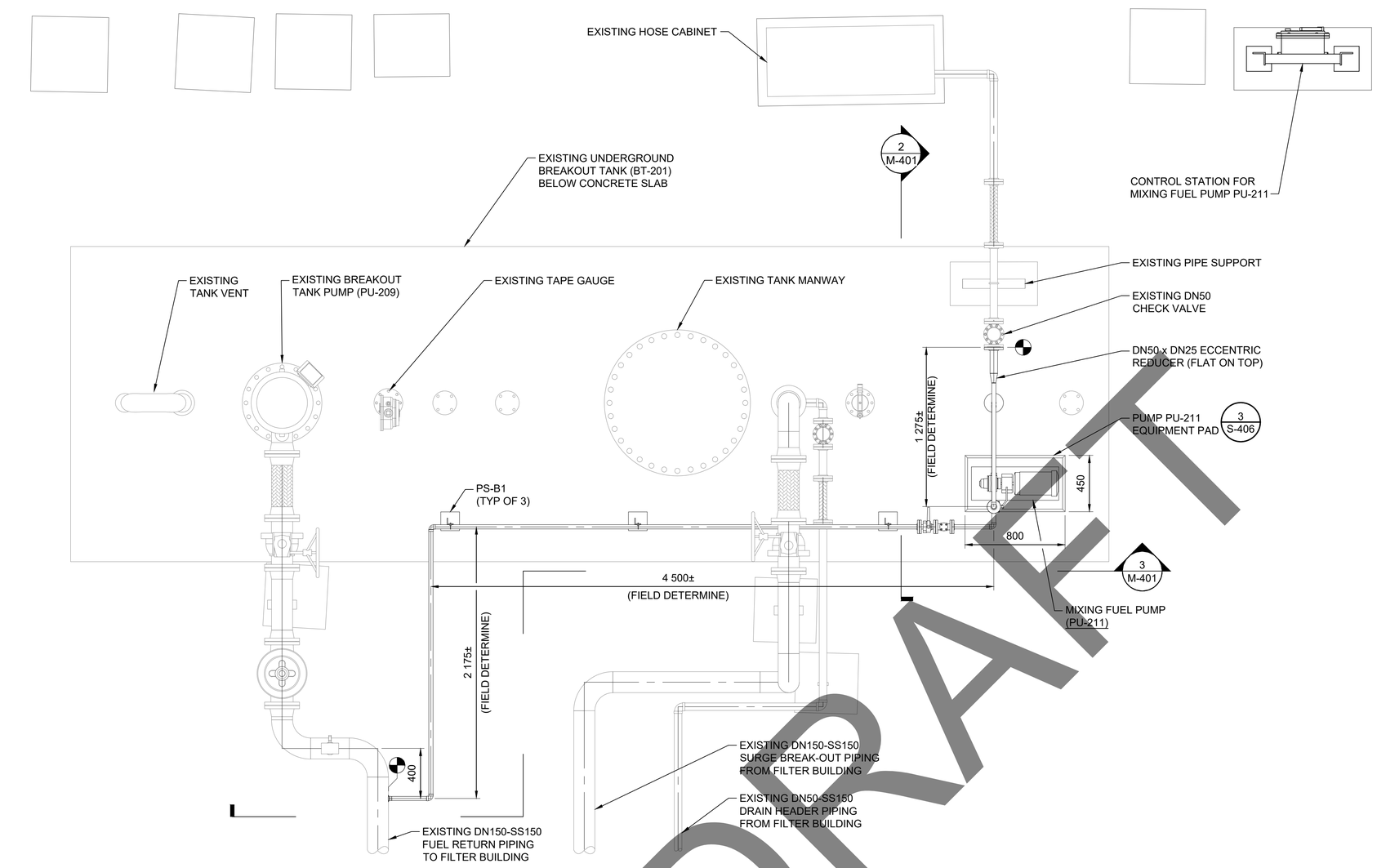

1 ENLARGED BREAKOUT TANK WATER DRAW-OFF PUMP PIPING MODIFICATIONS PLAN

SCALE: 1:20

0 500 1000mm

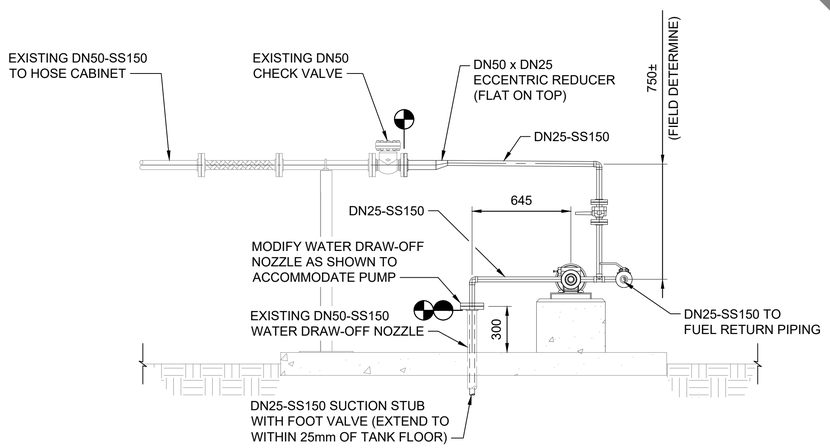

2 BREAK-OUT TANK WATER DRAW-OFF PIPING ELEVATION

SCALE: 1:20

0 500 1000mm

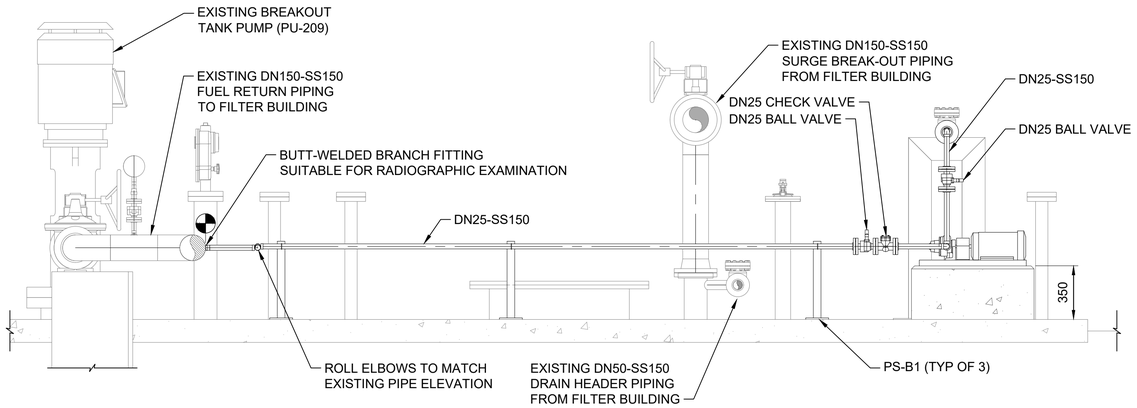

3 BREAK-OUT TANK WATER DRAW-OFF PIPING TIE-IN ELEVATION

SCALE: 1:20

0 500 1000mm

DRAFT

SHEET NOTES

1. SMALL BORE (DN50 AND SMALLER) PIPE SUPPORT SPACING MUST NOT EXCEED 2 METERS.

US Army Corps of Engineers®

MARK	DESCRIPTION	DATE

DESIGNED BY: C.SCHIENMAN
DRAWN BY: C.SCHIENMAN
CHECKED BY: M.FRITZ
SUBMITTED BY: K.WARING
SIZE: ISO A1
ISSUE DATE: FEBRUARY 2022
SOLICITATION NO.: -
CONTRACT NO.: W912HV-17-D-0007
DRAWING CODE: -
FILE NAME: DESC20UX-M-401.dwg

U.S. ARMY CORPS OF ENGINEERS
JAPAN DISTRICT
APO AP 96343-5010

ENTERPRISE ENGINEERING, INC.
400 US ROUTE 1
NORTH SUITE B
FALMOUTH, ME 04105
2550 CARDWELL STREET
SUITE 200
ANCHORAGE, AK 99503

DESC 20UX
INSTALL ADDITIVE INJECTION SYSTEM
MISAWA AIR BASE, JAPAN

ENLARGED BREAK-OUT TANK WATER DRAW-OFF PIPING MODIFICATIONS

SHEET ID
M-401

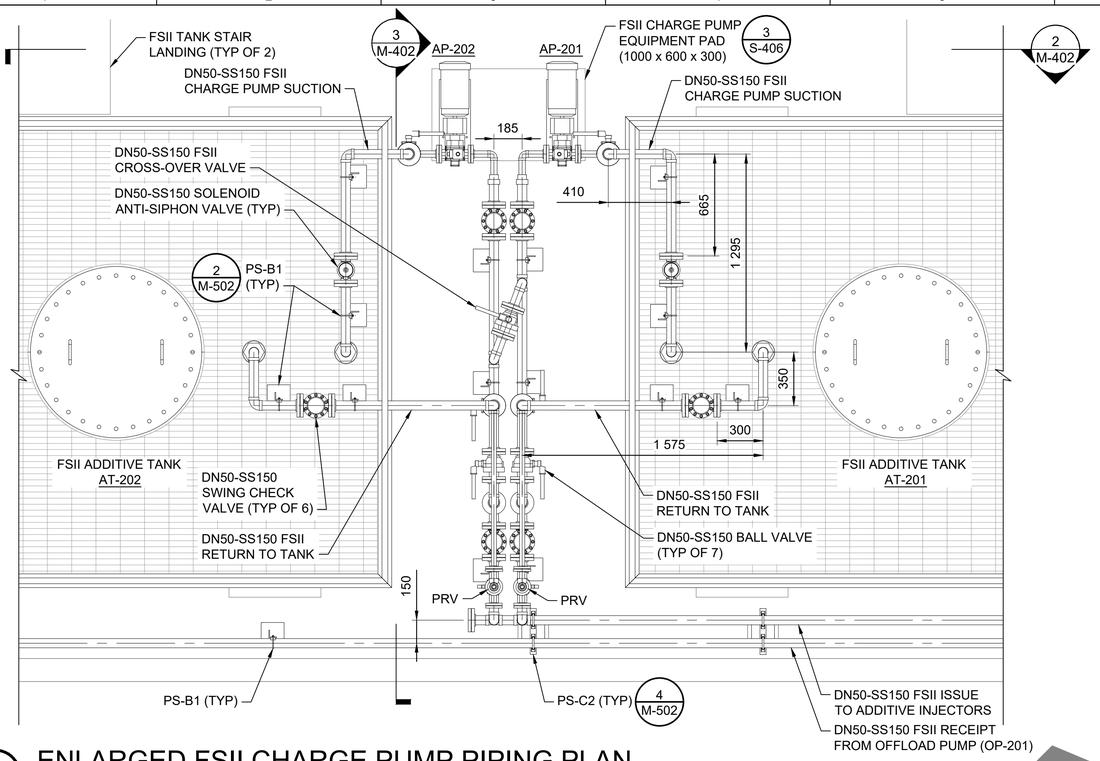

1 ENLARGED FSII CHARGE PUMP PIPING PLAN
SCALE: 1:20

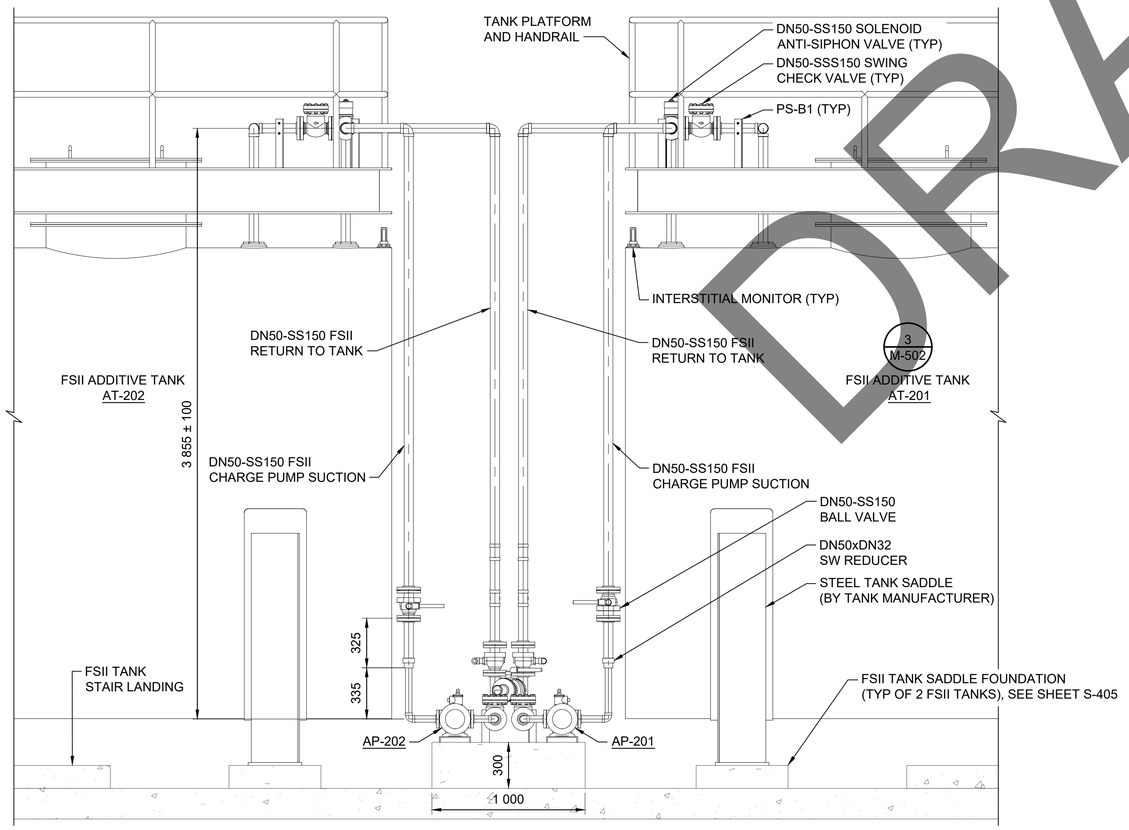

2 ENLARGED FSII CHARGE PUMP PIPING ELEVATION 1
SCALE: 1:20

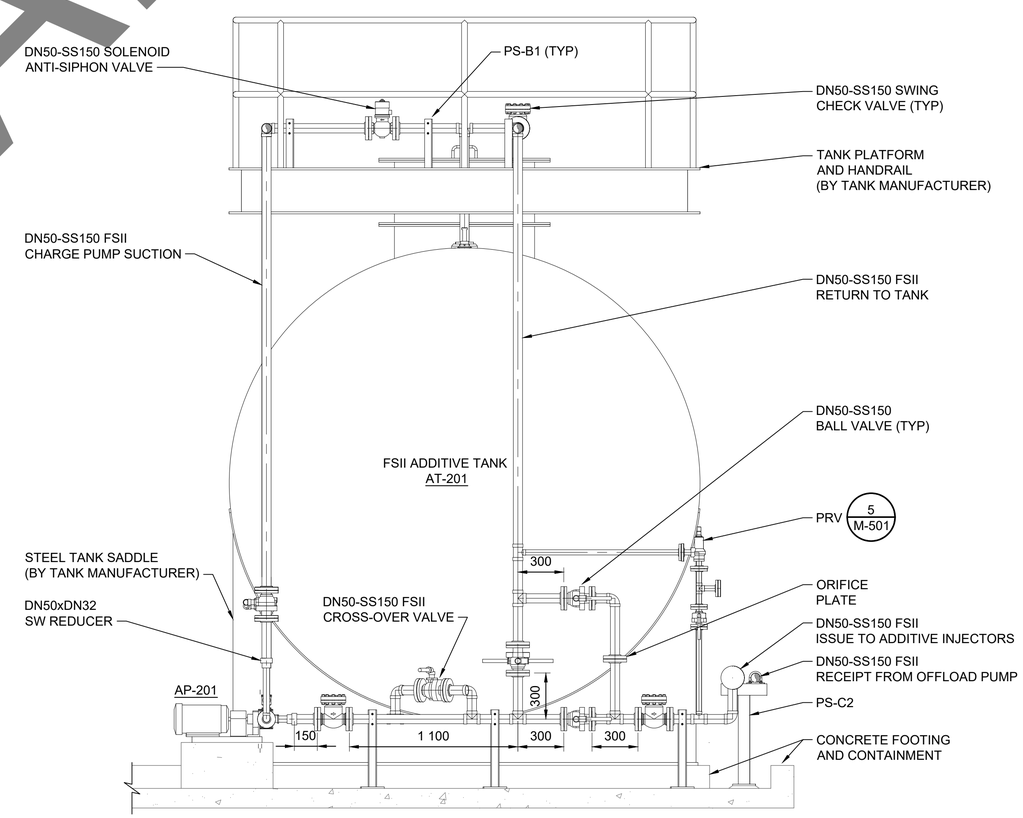

3 ENLARGED FSII CHARGE PUMP PIPING ELEVATION 2
SCALE: 1:20

DRAFT

US Army Corps of Engineers®

MARK	DESCRIPTION	DATE

DESIGNED BY: C.SCHIEHMAN
DRAWN BY: C.SCHIEHMAN
CHECKED BY: M.FRITZ
SUBMITTED BY: K.WARING
SIZE: ISO A1
ISSUE DATE: FEBRUARY 2022
SOLICITATION NO.: -
CONTRACT NO.: W912HV-17-D-0007
DRAWING CODE: -
FILE NAME: DESC20UX-M-402.dwg

U.S. ARMY CORPS OF ENGINEERS
JAPAN DISTRICT
APO AP 96343-5010

ENTERPRISE ENGINEERING, INC.
400 US ROUTE 1
NORTH SUITE B
FALMOUTH, ME 04105
2550 CARDWELL STREET
SUITE 200
ANCHORAGE, AK 99503

DESC 20UX
INSTALL ADDITIVE INJECTION SYSTEM
MISAWA AIR BASE, JAPAN

ENLARGED FSII CHARGE PUMP PIPING

SHEET ID
M-402

FILE: DESC20UX-M-402.dwg
DATE: 2/12/2021 12:47 PM
OPER:
SCALE:

IF SHEET IS LESS THAN 594 X 841 MM
REDUCED PRINT = USE GRAPHIC SCALES

RTA SUBMITTAL

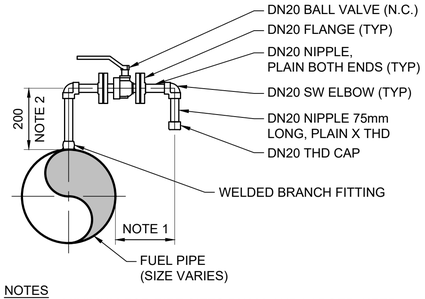

NOTES
1. 50mm MINIMUM FOR PIPE SIZES DN200 AND LARGER. KEEP DISTANCE AS SMALL AS POSSIBLE FOR PIPE SIZES DN150 AND SMALLER.
2. ADJUST LENGTH IN VALVE VAULTS WHERE INDICATED TO EXTEND VENT OUTLET AND VALVE ABOVE FLOOR GRATING.
3. DN20 HPV SHOWN. PROVIDE DN40 HPV WHERE INDICATED ON THE DRAWINGS AND FLOW DIAGRAMS.

1 HIGH POINT VENT (HPV)
SCALE: 1:10 (0 200 400mm)

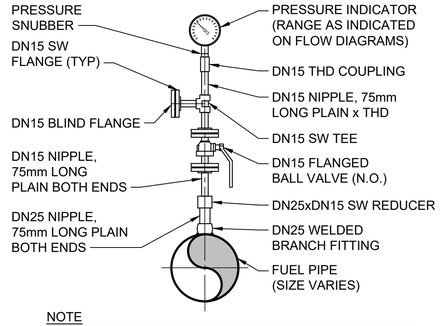

NOTE
1. INDICATOR MUST DISPLAY PRESSURE IN KILOPASCALS AND POUNDS PER SQUARE INCH.

2 PRESSURE INDICATOR (PI)
SCALE: 1:10 (0 200 400mm)

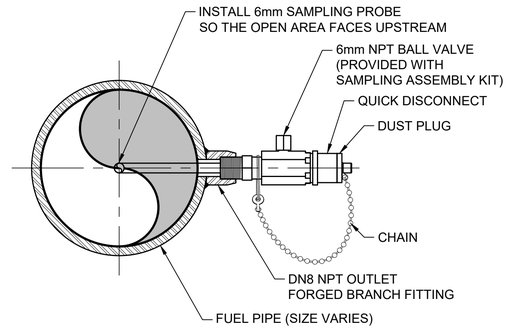

3 SAMPLE CONNECTION (SC)
SCALE: 1:2 (0 50 100mm)

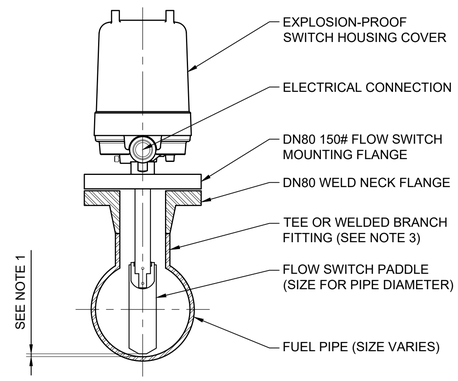

NOTES
1. REFER TO MANUFACTURER'S WRITTEN INSTRUCTIONS FOR FLOW SWITCH INSTALLATION AND MINIMUM CLEARANCE REQUIREMENTS FOR THE FLOW PADDLE.
2. ALIGN FLOW SWITCH ARROW WITH DIRECTION OF FLOW.
3. FOR PIPE SIZE DN80 PROVIDE REGULAR TEE. FOR PIPE SIZE DN100 THROUGH DN150 PROVIDE DN80 REDUCING TEE. FOR PIPE SIZE DN200 AND LARGER, PROVIDE DN80 INSERT-TYPE WELDING BRANCH FITTING (VESSOLET).

4 LOW FLOW SWITCH (FSL)
SCALE: 1:5 (0 100 200mm)

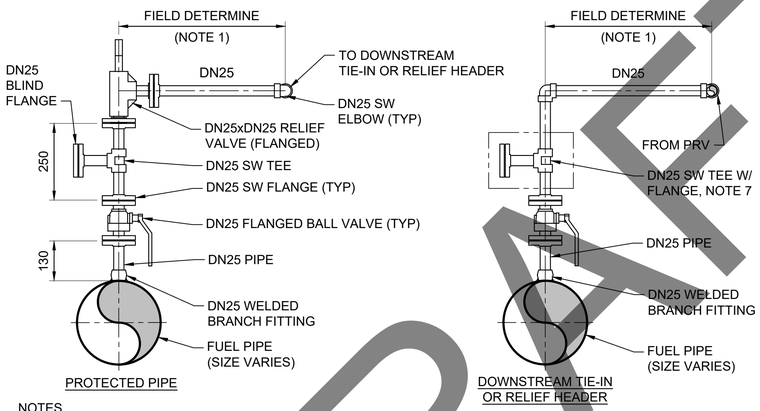

NOTES
1. ADJUST DIMENSIONS AS REQUIRED TO CLEAR DOWNSTREAM CONFLICTS AND ROUTE BYPASS PIPING TO LOCATIONS AS INDICATED ON PLANS
2. PROVIDE BRANCH CONNECTION AT 12 O'CLOCK, 3 O'CLOCK, OR 9 O'CLOCK POSITIONS AS INDICATED ON PLANS.
3. RELIEF PIPING AND VALVE MATERIALS MUST BE AS INDICATED ON FLOW DIAGRAM AND PLAN SHEETS.
4. RELIEF VALVE SETTINGS AS INDICATED ON FLOW DIAGRAM SHEETS.
5. LOCK BALL VALVES OPEN USING PLASTIC STRAPS (CAR SEALS).
6. INSTALL RELIEF VALVE WITH INLET IN THE VERTICAL DOWN ORIENTATION.
7. PROVIDE DOWNSTREAM TESTING TEE WITH BLIND FLANGE WHERE INDICATED ON THE FLOW DIAGRAMS.

5 PRESSURE RELIEF VALVE (PRV) ASSEMBLY
SCALE: 1:10 (0 200 400mm)

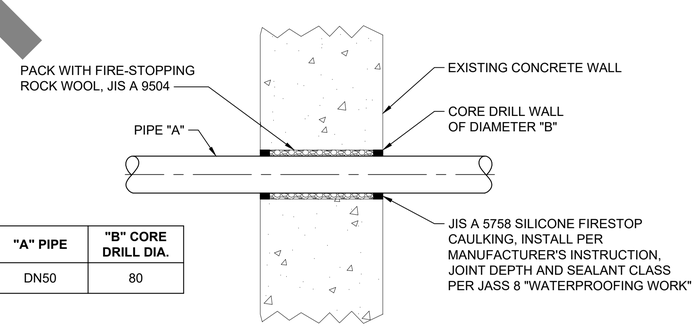

"A" PIPE	"B" CORE DRILL DIA.
DN50	80

6 SMALL-BORE CORE DRILLED WALL PENETRATION
SCALE: NTS (0 200 400mm)

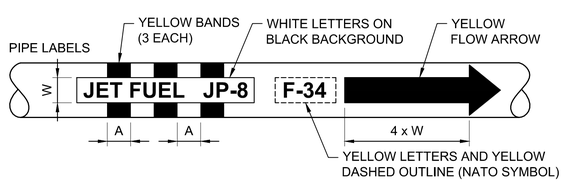

PIPE DIAMETER	BAND WIDTH AND SPACING "A"	LENGTH OF BANDS	LETTER SIZE	BACKGROUND AND ARROW WIDTH "W"
UNDER DN80	75 mm	ENCIRCLE	13 mm	25 mm
DN80 TO DN150	75 mm	ENCIRCLE	25 mm	50 mm
DN150 TO DN200	75 mm	ENCIRCLE	50 mm	75 mm
OVER DN200	100 mm	ENCIRCLE	75 mm	115 mm

NOTES
1. LABELS AND MARKINGS MUST BE IN ACCORDANCE WITH MIL-STD-161H DATED 04 SEPTEMBER 2015.
2. MARKINGS (TITLES, BANDS AND ARROWS) MUST BE APPLIED BY PAINTING AND STENCILING OR, ELASTOMERIC FILM OR REFLECTORIZED SHEETING DECALS. IF DECALS, FILM OR SHEETING ARE USED, MATERIAL MUST CONFORM TO SPECIFICATION MIL-DTL-43719 OR ASTM D4956 AS APPLICABLE.
3. PROVIDE MARKINGS AT LOCATIONS WHERE THE PIPELINE ENTERS/ EXITS THE GROUND, IN VALVE PITS, AT INTERSECTIONS OF ABOVEGROUND PIPING, ON ABOVEGROUND PIPING AT APPROXIMATELY 60 METER INTERVALS, AT ALL RECEIVING CONNECTIONS, WHERE LINE CONNECTIONS ARE MADE AT MANIFOLDS, AND AT ANY OTHER LOCATION NECESSARY TO ASSURE READY IDENTIFICATION OF THE PRODUCT IN THE SYSTEM.
4. IN CONCRETE PITS AND SIMILAR CONDITIONS WHERE SPACE WILL NOT PERMIT BANDING AND STENCILING OF THE PIPE, THE VERTICAL BAND(S) MUST BE PAINTED ON THE WALL ADJACENT TO THE PIPE. THE TITLE MUST BE STENCILED HORIZONTALLY IN WHITE ACROSS THE BANDS. WHERE PIT COVERS ARE INSTALLED, MARKINGS MAY BE APPLIED TO THE TOP OF THE COVERS.
5. PROVIDE FLOW ARROWS AS SHOWN TO INDICATED DIRECTION OF FLOW.

7 PRODUCT FLOW SYMBOL
SCALE: NTS

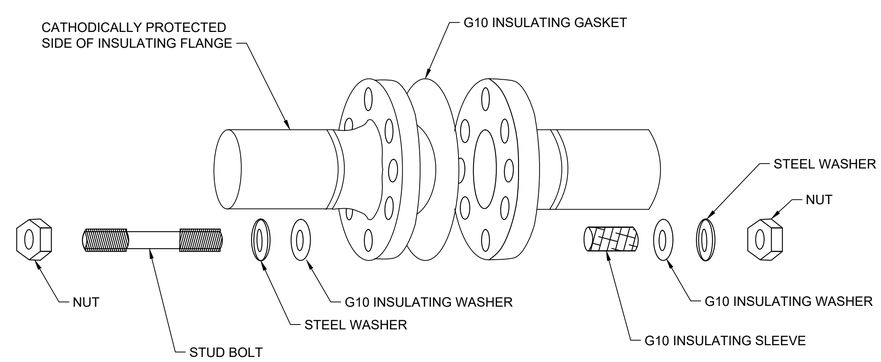

8 INSULATING FLANGE KIT (IF KIT)
SCALE: NTS

DRAFT

US Army Corps of Engineers®

MARK	DESCRIPTION	DATE

DESIGNED BY: M. FRITZ
DRAWN BY: M. FRITZ, S-HAURI
CHECKED BY: K. WARING
SUBMITTED BY: K. WARING
SIZE: ISO A1
FILE NAME: DESC20UX-M-501.dwg
ISSUE DATE: FEBRUARY 2022
SOLICITATION NO.:
CONTRACT NO.: W912HV-17-D-0007
DRAWING CODE: -

U.S. ARMY CORPS OF ENGINEERS
17TH CONTRACTING DIST
APO AP 96343-5010

ENTERPRISE ENGINEERING, INC.
9000 CLEMENTS STREET
SUITE 200
ANCHORAGE, AK 99503
400 US ROUTE 1
NORTH SUITE B
FALMOUTH, ME 04105

DESC 20UX
INSTALL ADDITIVE INJECTION SYSTEM
MISAWA AIR BASE, JAPAN

GENERAL MECHANICAL PIPING DETAILS

SHEET ID
M-501

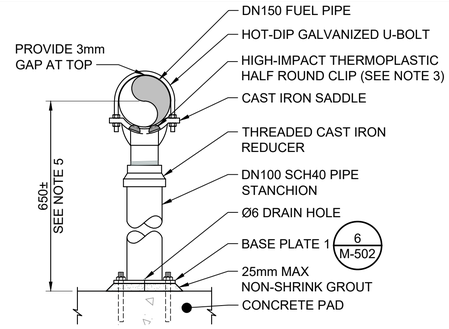

NOTES
1. SEE PIPE SECTIONS AND ELEVATIONS FOR REQUIRED SUPPORT HEIGHTS.
2. PIPE STANCHION MUST BE HOT-DIP GALVANIZED.
3. HALF-ROUND THERMOPLASTIC CLIPS MUST PROVIDE A 6mm MIN GAP BETWEEN PIPE AND SADDLE. PROVIDE 2 CLIPS PER SADDLE FOR PIPE SIZES UP TO DN150. ADHERE CLIPS TO SUPPORT SADDLE USING CLIP MANUFACTURER'S RECOMMENDED ADHESIVE.
4. PROVIDE A 3mm THICK TEFLON PAD BETWEEN PIPE AND U-BOLT.
5. COORDINATE HEIGHT WITH PIPE LAYOUT ON EXISTING PIPE SUPPORT, SEE DETAIL 10/M-502.

1 PIPE SUPPORT (PS-A1)
SCALE: 1:10 (0 200 400mm)

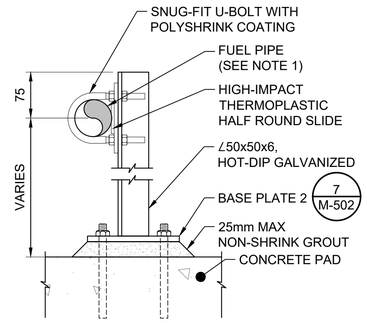

NOTES
1. PIPE SUPPORT SUITABLE FOR SMALL BORE PIPE SIZES UP TO DN80.
2. SEE PIPE SECTIONS AND ELEVATIONS FOR REQUIRED SUPPORT HEIGHTS.
3. PROVIDE Ø10 HOT-DIP GALVANIZED U-BOLTS.

2 PIPE SUPPORT (PS-B1)
SCALE: 1:5 (0 100 200mm)

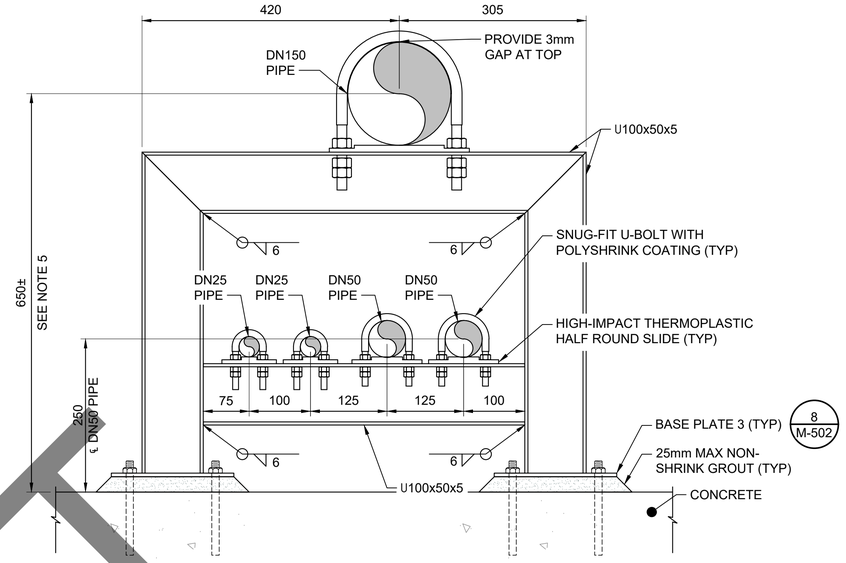

NOTES
1. SEE PIPE SECTIONS AND ELEVATIONS FOR REQUIRED SUPPORT HEIGHTS.
2. SUPPORT FINISH MUST BE HOT-DIP GALVANIZED.
3. PROVIDE Ø16 U-BOLTS FOR DN150 PIPE AND Ø10 U-BOLTS FOR DN25 AND DN50 PIPE. U-BOLTS MUST BE HOT-DIP GALVANIZE
4. MAXIMUM SPACING OF PIPE SUPPORTS MUST NOT EXCEED 2 METERS.
5. COORDINATE HEIGHT WITH PIPE LAYOUT ON EXISTING PIPE SUPPORT, SEE DETAIL 10/M-502.

3 PIPE SUPPORT (PS-C1)
SCALE: 1:5 (0 100 200mm)

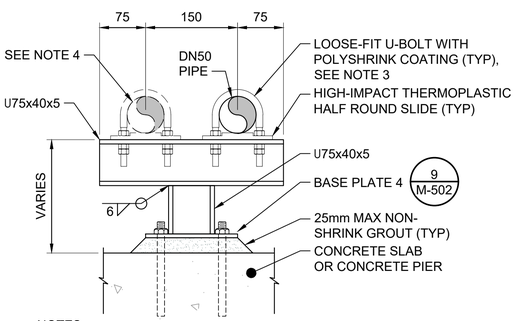

NOTES
1. SEE PIPE SECTIONS AND ELEVATIONS FOR REQUIRED SUPPORT HEIGHTS.
2. SUPPORT FINISH MUST BE HOT-DIP GALVANIZED.
3. PROVIDE Ø10 HOT-DIP GALVANIZED U-BOLTS. U-BOLTS MUST PROVIDE A MINIMUM GAP OF 3mm BETWEEN THE U-BOLT AND PIPE ON THE TOP AND SIDES.
4. AT LOCATIONS WITH ONLY ONE PIPE, PROVIDE ADDITIONAL U-BOLT AND SLIDE AS SHOWN TO ACCOMMODATE INSTALLATION OF A FUTURE DN50 PIPE.
5. MAXIMUM SPACING OF PIPE SUPPORTS MUST NOT EXCEED 2 METERS.
6. FOR SUPPORTS LOCATED IN NON-PAVED AREAS, PROVIDE A CONCRETE PIER. SEE 4/S-406 FOR CONCRETE PIER FOR MINOR PIPING DETAIL.

4 PIPE SUPPORT (PS-C2)
SCALE: 1:5 (0 100 200mm)

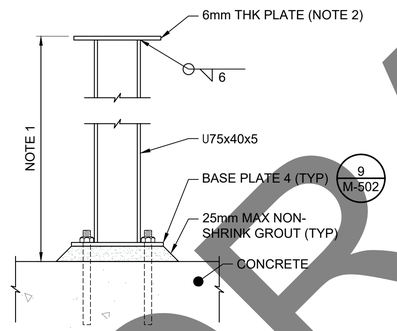

NOTES
1. SEE PIPE SECTIONS AND ELEVATIONS FOR REQUIRED SUPPORT HEIGHTS. COORDINATE WITH METER.
2. MOUNT METER TO PLATE. COORDINATE WITH METER MANUFACTURER FOR MOUNTING PLATE SIZE, BOLT HOLE ARRANGEMENT, AND BOLT HOLE SIZE.
3. SUPPORT FINISH MUST BE HOT-DIP GALVANIZED.

5 PIPE SUPPORT (PS-C3)
SCALE: 1:5 (0 100 200mm)

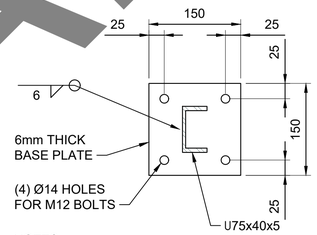

NOTES
1. BASE PLATE AND SUPPORT MUST BE HOT-DIP GALVANIZED.
2. PROVIDE (4) M12 ADHESIVE ANCHORS, 100mm MIN EMBED.
3. FOR PIPE SUPPORTS INSTALLED ON CONCRETE PIERS, ANCHORS WILL BE CAST INTO THE CONCRETE DURING CONSTRUCTION, REFER TO STRUCTURAL DETAILS.

9 BASE PLATE 4
SCALE: 1:5 (0 100 200mm)

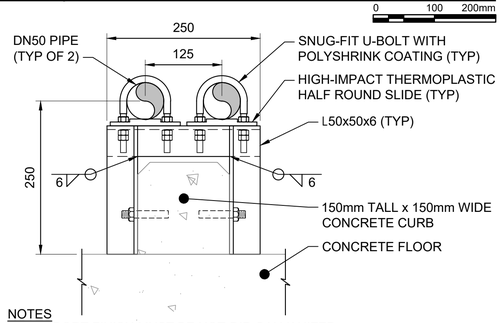

NOTES
1. SUPPORT FINISH MUST BE HOT-DIP GALVANIZED.
2. PROVIDE Ø10 HOT-DIP GALVANIZED U-BOLTS.
3. MAXIMUM SPACING OF PIPE SUPPORTS MUST NOT EXCEED 2 METERS.
4. PROVIDE (2) M10 EXPANSION ANCHORS, 50mm MIN EMBED.

11 PIPE SUPPORT (PS-D1)
SCALE: 1:5 (0 100 200mm)

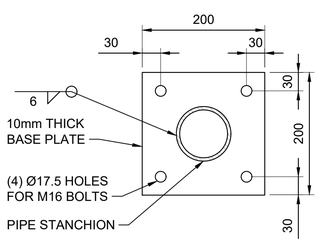

NOTES
1. BASE PLATE AND PIPE STANCHION OR ANGLE MEMBER MUST BE HOT-DIP GALVANIZED.
2. PROVIDE (4) M16 ADHESIVE ANCHORS, 100mm MIN EMBED.

6 BASE PLATE 1
SCALE: 1:5 (0 100 200mm)

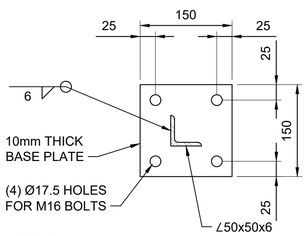

NOTES
1. BASE PLATE AND ANGLE SUPPORT MUST BE HOT-DIP GALVANIZED.
2. PROVIDE (4) M16 ADHESIVE ANCHORS, 100mm MIN EMBED.

7 BASE PLATE 2
SCALE: 1:5 (0 100 200mm)

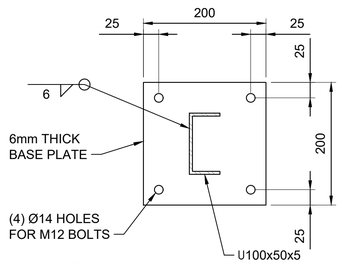

NOTES
1. BASE PLATE AND SUPPORT MUST BE HOT-DIP GALVANIZED.
2. PROVIDE (4) M12 ADHESIVE ANCHORS, 100mm MIN EMBED.

8 BASE PLATE 3
SCALE: 1:5 (0 100 200mm)

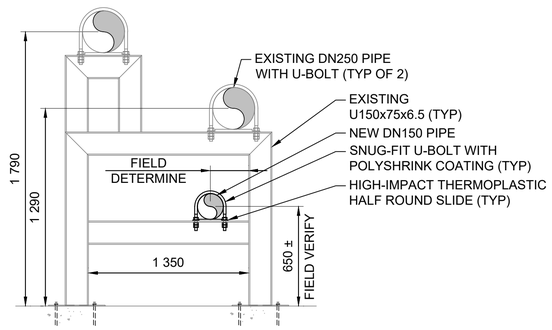

10 EXISTING PIPE SUPPORT MODIFICATION
SCALE: 1:20 (0 500 1000mm)

DRAFT

US Army Corps of Engineers®

MARK	DESCRIPTION	DATE

DESIGNED BY: C.SCHIERMAN
DRAWN BY: D.FOULK
CHECKED BY: M.FRITZ
SUBMITTED BY: K.WARING
SIZE: ISO A1
ISSUE DATE: FEBRUARY 2022
SOLICITATION NO.: -
CONTRACT NO.: W912HV-17-D-0007
DRAWING CODE: -
FILE NAME: DESC20UX-M-502.dwg

U.S. ARMY CORPS OF ENGINEERS
PACIFIC OCEAN DIVISION
APO AP 96343-5010

ENTERPRISE ENGINEERING, INC.
2550 CAMPBELL STREET
SUITE 200
ANCHORAGE, AK 99503
400 US ROUTE 1
NORTH SUITE B
FALMOUTH, ME 04105

DESC 20UX
INSTALL ADDITIVE INJECTION SYSTEM
MISAWA AIR BASE, JAPAN

PIPE SUPPORT DETAILS

SHEET ID
M-502

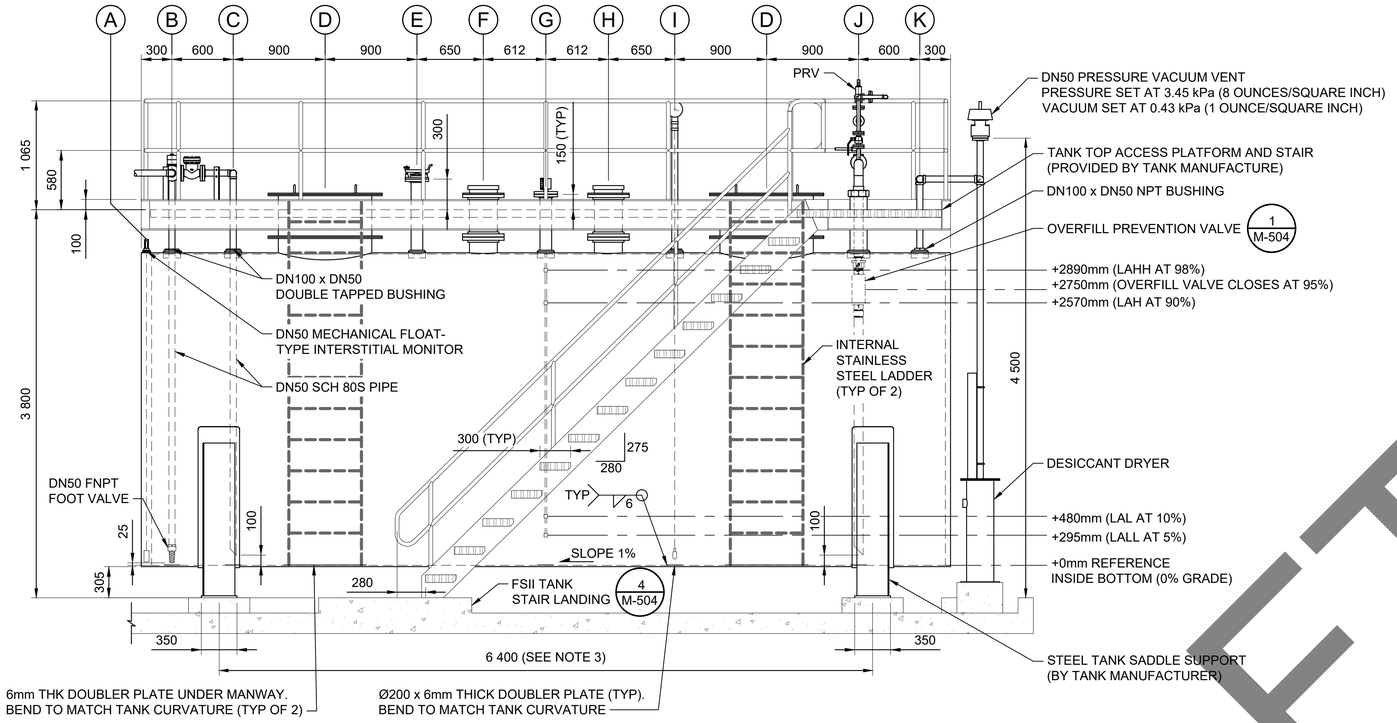

1 FSII STORAGE TANK SIDE ELEVATION

SCALE: 1:30

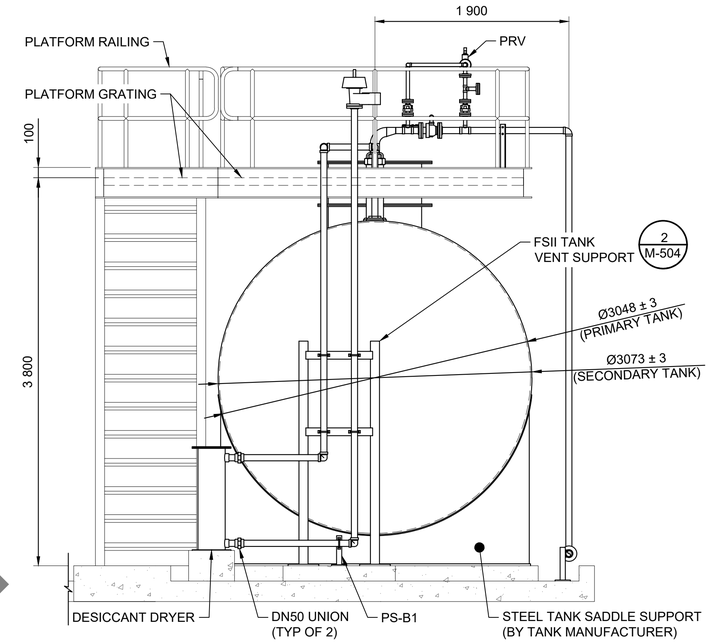

2 FSII STORAGE TANK END ELEVATION

SCALE: 1:30

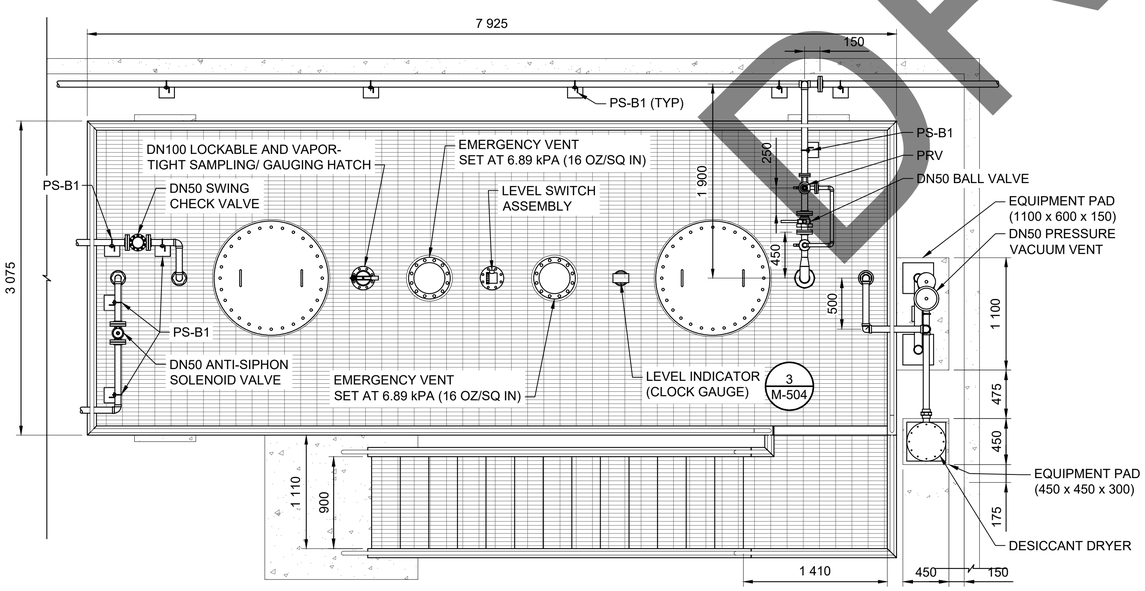

3 FSII STORAGE TANK (AT-201) DETAIL

SCALE: 1:30

TANK NOZZLE SCHEDULE

	QTY	SIZE	TYPE	REMARKS
A	1	DN50	FNPT	INTERSTITIAL MONITOR
B	1	DN100	FNPT	FSII SUPPLY
C	1	DN100	FNPT	FSII RETURN
D	2	900 mm	--	MANWAY
E	1	DN100	FNPT	SAMPLING AND GAUGING
F	1	DN250	RFSO	PRIMARY TANK EMERGENCY VENT
G	1	DN100	FNPT	LEVEL SWITCH
H	1	DN250	RFSO	SECONDARY TANK EMERGENCY VENT
I	1	DN100	FNPT	LEVEL INDICATOR (CLOCK GAUGE)
J	1	DN150	FNPT	TANK FILL
K	1	DN100	FNPT	PRESSURE/ VACUUM VENT

SHEET NOTES

1. DETAIL FOR FSII TANK AT-201 SHOWN, FSII TANK AT-202 IS MIRRORED.
2. PRIMARY AND SECONDARY TANKS MUST BE CONSTRUCTED OF 304L STAINLESS STEEL.
3. TANK SADDLES MUST BE PROVIDED BY THE TANK MANUFACTURER AND CONSTRUCTED OF STAINLESS STEEL. SADDLE SIZE AND SPACING MUST BE DESIGNED BY THE TANK MANUFACTURER IN ACCORDANCE WITH UL142 TO SUPPORT THE WEIGHT OF THE LIQUID WITHIN THE TANK AND THE PLATFORM AND COMPONENTS INSTALLED ON THE TOP OF THE TANK. COORDINATE SADDLE SUPPORT SPACING AND TANK ANCHOR LOCATIONS WITH STRUCTURAL.
4. TANK LIFTING LUGS OR LIFTING EYES ARE NOT SHOWN. PROVIDE PERMANENTLY INSTALLED LIFTING LUGS OR LIFTING EYES DESIGNED BY THE TANK MANUFACTURER IN ACCORDANCE WITH UL142. LIFTING LUG OR LIFTING EYE QUANTITIES AND LOCATIONS MUST BE DETERMINED BY THE TANK MANUFACTURER.
5. PROVIDE PLATFORM CENTERED ON AND ABOVE TANK WITH GEOMETRY AS SHOWN. PLATFORM MUST INCLUDE A STAIR LANDING AS SHOWN. PLATFORM MUST BE SUPPORTED BY THE TANK (NOT SHOWN FOR CLARITY). PROVIDE 200mm CLEARANCE MIN BETWEEN PLATFORM FRAMING AND THE TANK TOP.
6. PLATFORM MUST BE CONSTRUCTED OF EITHER THE SAME TYPE OF STAINLESS STEEL AS THE TANK, OR MUST BE CONSTRUCTED OF HOT-DIP GALVANIZED STEEL AND ELECTRICALLY ISOLATED FROM THE TANK TO PREVENT GALVANIC (DISSIMILAR METAL) CORROSION.
7. PROVIDE ACCESS STAIR WITH C250x90x9x13 STAIR STRINGER MIN. STAIR MUST BE SUPPORTED BY THE PLATFORM. TOP OF CONCRETE STAIR LANDING IS THE SAME ELEVATION AS THE TOP OF TANK SUPPORT CONCRETE PAD.
8. PROVIDE STEEL BAR GRATING FOR PLATFORM AND STAIR TREADS. PROVIDE ABRASIVE NOSINGS FOR STAIR TREADS.
9. PROVIDE CONTINUOUS PERIMETER PLATFORM HANDRAILS AND HANDRAILS ON BOTH SIDES OF STAIR.
10. TANK MANUFACTURER MUST DESIGN TANK STAIR AND PLATFORM SUITABLE FOR LOCATION, ACCOUNTING FOR PERSONNEL, EQUIPMENT, WIND, SNOW, AND SEISMIC LOADS.
11. REFER TO EQUIPMENT SCHEDULES ON SHEET M-601 FOR ADDITIONAL TANK INFORMATION.

DRAFT

US Army Corps of Engineers®

MARK	DESCRIPTION	DATE

ISSUE DATE: FEBRUARY 2022
SOLICITATION NO.: -
CONTRACT NO.: W912HV-17-D-0007
DRAWING CODE: -
DESIGNED BY: C. SCHIERMAN
DRAWN BY: M. FRITZ
CHECKED BY: M. FRITZ
SUBMITTED BY: K. WARING
SIZE: ISO A1
FILE NAME: DESC20UX-M-503.dwg

U.S. ARMY CORPS OF ENGINEERS
POB 1057 KAMIKAZE DIST
APO AP 96343-5010

ENTERPRISE ENGINEERING, INC.
2550 CARDWELL STREET
SUITE 200
ANCHORAGE, AK 99503

400 US ROUTE 1
NORTH SUITE B
FALMOUTH, ME 04105

DESC 20UX
INSTALL ADDITIVE FUELING SYSTEM
MISAWA AIR BASE, JAPAN

FSII ADDITIVE STORAGE TANK DETAILS 1

SHEET ID
M-503

FILE: DESC20UX-M-503.dwg
DATE: 2/11/2021 11:49 AM OPER: SCALE:

IF SHEET IS LESS THAN 594 X 841 MM
REDUCED PRINT = USE GRAPHIC SCALES

RTA SUBMITTAL

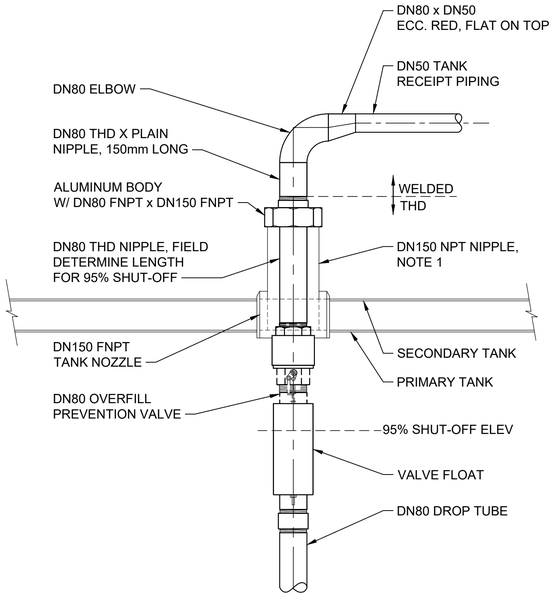

NOTE
1. LENGTHEN DN150 THD NIPPLE TO EXTEND PIPING ABOVE PLATFORM GRATING.

1 FSII TANK OVERFILL PREVENTION VALVE
SCALE: NTS

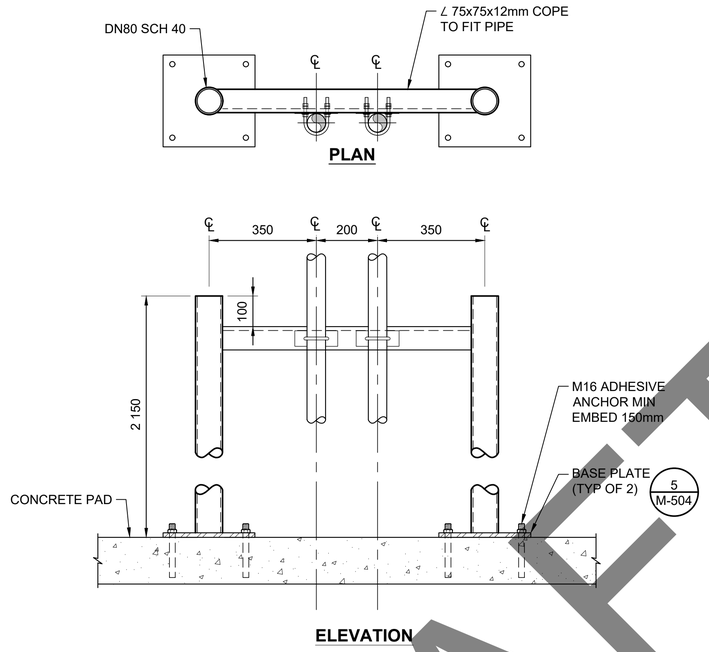

NOTES
1. PROVIDE U-BOLT TO FIT VENT PIPE.
2. PROVIDE SUPPORT WITH THE EPOXY COATING SPECIFIED FOR THE EXTERIOR OF STEEL STRUCTURES.

2 FSII TANK VENT SUPPORT
SCALE: 1:10

0 200 400mm

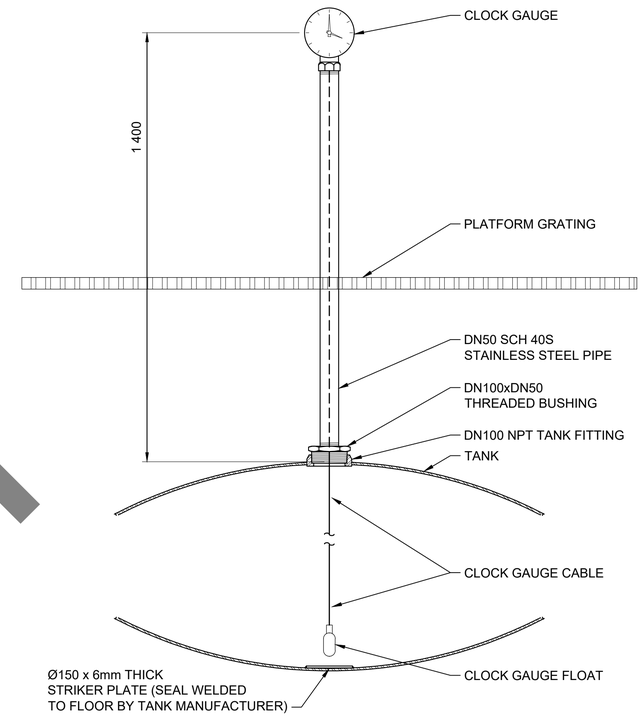

3 FSII TANK LEVEL INDICATOR (CLOCK GAUGE)
SCALE: 1:10

0 200 400mm

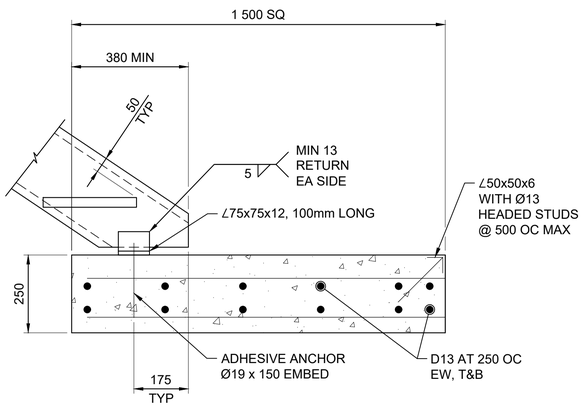

4 FSII TANK STAIR LANDING
SCALE: NTS

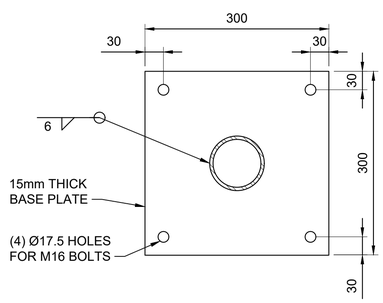

5 BASE PLATE
SCALE: 1:5

0 100 200mm

DRAFT

US Army Corps of Engineers®

MARK	DESCRIPTION	DATE

DESIGNED BY: M. FRITZ
DRAWN BY: T. TORRES-HAURI
CHECKED BY: K. WARING
SUBMITTED BY: K. WARING
SIZE: ISO A1
ISSUE DATE: FEBRUARY 2022
SOLICITATION NO.: -
CONTRACT NO.: W912HV-17-D-0007
DRAWING CODE: -
FILE NAME: DESC20UX-M-504.dwg

U.S. ARMY CORPS OF ENGINEERS
JAPAN DISTRICT
APO AP 96343-5010

ENTERPRISE ENGINEERING, INC.
400 US ROUTE 1
NORTH SUITE B
FALMOUTH, ME 04105
2550 CUSHELL STREET
SUITE 200
ANCHORAGE, AK 99503

DESC 20UX
INSTALL ADDITIVE INJECTION SYSTEM
MISAWA AIR BASE, JAPAN

FSII ADDITIVE STORAGE TANK DETAILS 2

SHEET ID
M-504

FILE: DESC20UX-M-504.dwg
DATE: 11/23/2020 2:32 PM
OPER:
SCALE:

IF SHEET IS LESS THAN 594 X 841 MM
REDUCED PRINT = USE GRAPHIC SCALES

RTA SUBMITTAL

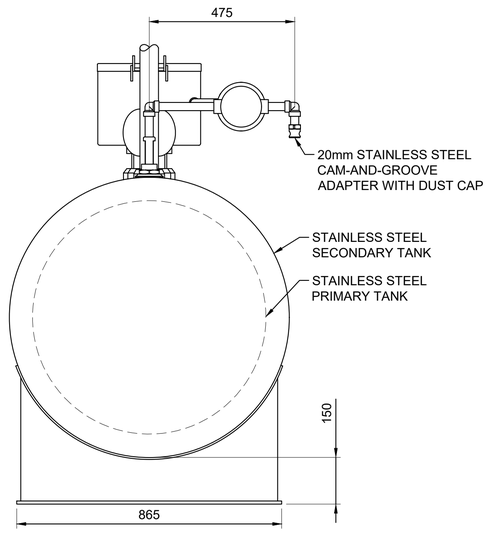

1 SDA STORAGE TANK END ELEVATION
SCALE: 1:10

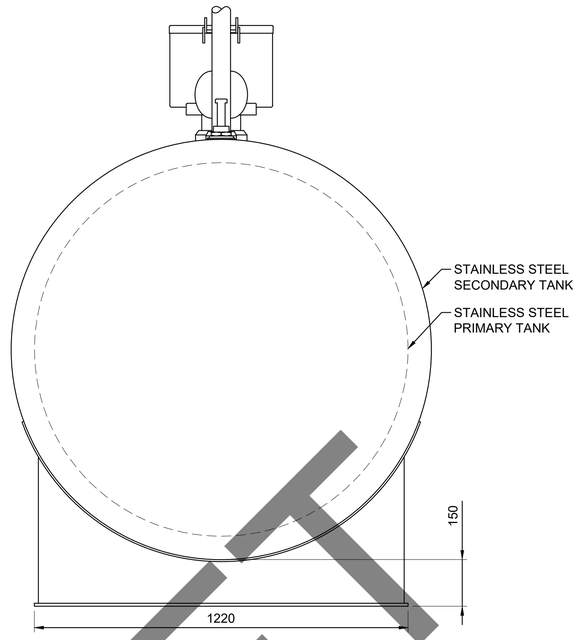

2 CI/LI STORAGE TANK END ELEVATION
SCALE: 1:10

SDA TANK NOZZLE SCHEDULE

	QTY	SIZE	TYPE	REMARKS
A	1	DN100	MNPT	TANK FILL WITH 19L (5 GAL) OFFSET SPILL CONTAINER
B	1	DN80	FNPT	PRIMARY TANK EMERGENCY VENT
C	1	DN80	FNPT	SECONDARY TANK EMERGENCY VENT
D	1	DN50	FNPT	LEVEL INDICATOR (CLOCK GAUGE)
E	1	DN50	FNPT	PRESSURE/ VACUUM VENT
F	1	DN50	FNPT	SDA SUPPLY
G	1	DN50	FNPT	INTERSTITIAL MONITOR

CI/LI TANK NOZZLE SCHEDULE

	QTY	SIZE	TYPE	REMARKS
A	1	DN100	MNPT	TANK FILL WITH 19L (5 GAL) OFFSET SPILL CONTAINER
B	1	DN100	FNPT	PRIMARY TANK EMERGENCY VENT
C	1	DN100	FNPT	SECONDARY TANK EMERGENCY VENT
D	1	DN50	FNPT	LEVEL INDICATOR (CLOCK GAUGE)
E	1	DN50	FNPT	PRESSURE/ VACUUM VENT
F	1	DN50	FNPT	CI/LI SUPPLY
G	1	DN50	FNPT	INTERSTITIAL MONITOR

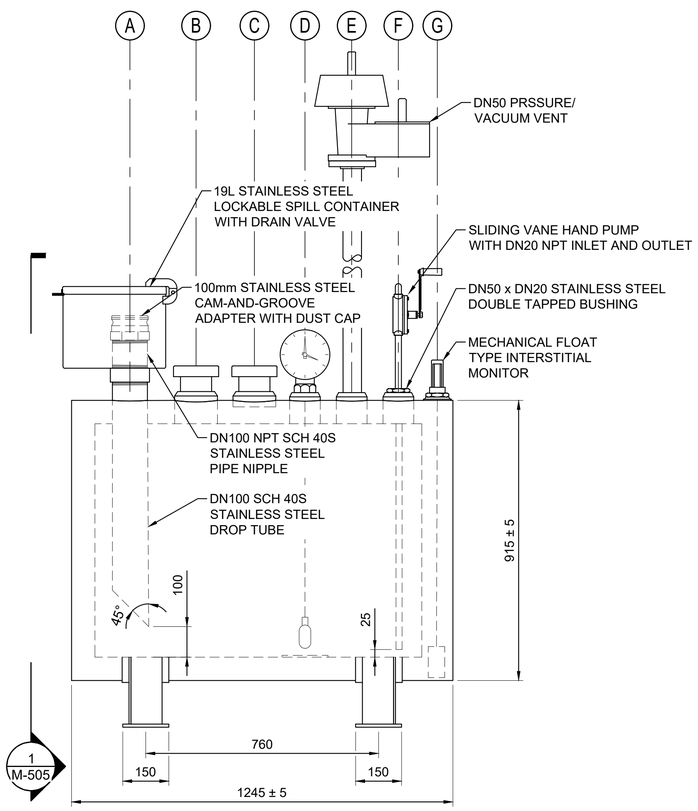

3 SDA STORAGE TANK (AT-3) DETAIL
SCALE: 1:10

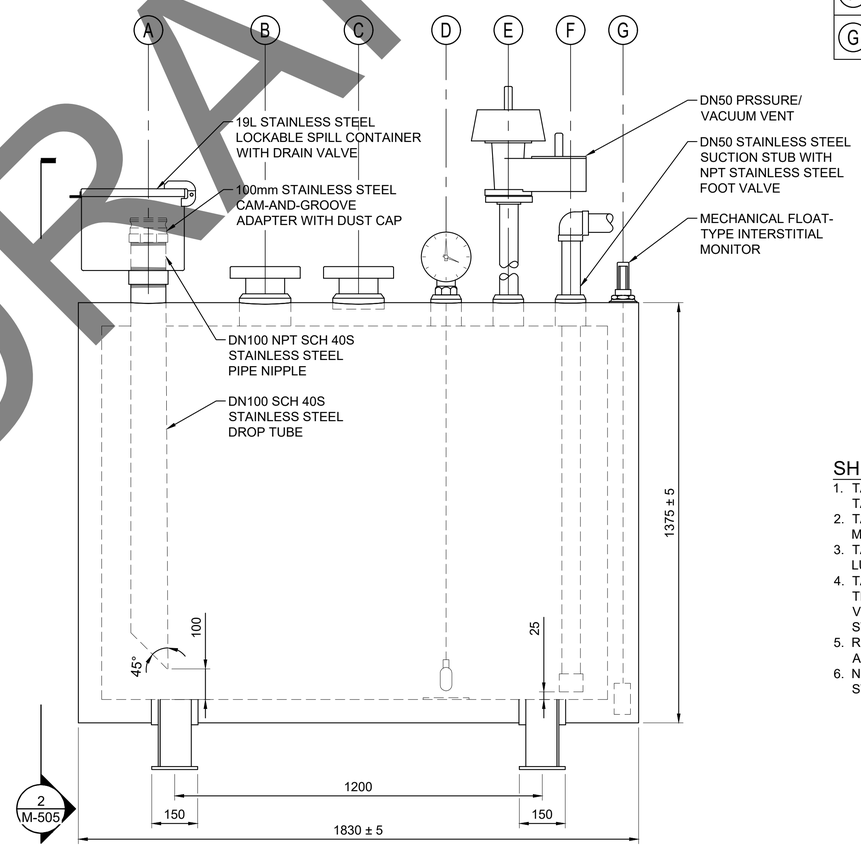

4 CI/LI STORAGE TANK (AT-4) DETAIL
SCALE: 1:10

SHEET NOTES

1. TANKS MUST BE UL 2085 LISTED. PRIMARY AND SECONDARY TANKS MUST BE CONSTRUCTED OF 304L STAINLESS STEEL.
2. TANK SADDLES MUST BE PROVIDED BY THE TANK MANUFACTURER AND CONSTRUCTED OF STAINLESS STEEL.
3. TANK LIFTING LUGS ARE NOT SHOWN. COORDINATE LIFTING LUG LOCATIONS WITH TANK MANUFACTURER.
4. TANK PRESSURE/ VACUUM VENTS MUST EXTEND THROUGH THE CANOPY. PROVIDE ELBOWS AS REQUIRED TO OFFSET VENT RISER PIPE TO AVOID CONFLICTS WITH CANOPY STRUCTURAL MEMBERS.
5. REFER TO EQUIPMENT SCHEDULES ON SHEET M-601 FOR ADDITIONAL TANK INFORMATION.
6. NOT ALL TANK STRIKER PLATES ARE SHOWN. PROVIDE STRIKER PLATES UNDER ALL OPENINGS.

DRAFT

US Army Corps of Engineers®

MARK	DESCRIPTION	DATE

ISSUE DATE: FEBRUARY 2022
SOLICITATION NO.: -
CONTRACT NO.: W912HV-17-D-0007
DRAWING CODE: -
FILE NAME: DESC20UX-M-505.dwg

DESIGNED BY: M. FRITZ
DRAWN BY: M. FRITZ
CHECKED BY: J. FREDERICK
SUBMITTED BY: K. WARING
SIZE: ISO A1

U.S. ARMY CORPS OF ENGINEERS
JAPAN DISTRICT
APO AP 96343-5010

ENTERPRISE ENGINEERING, INC.
400 US ROUTE 1
NORTH SUITE B
FALMOUTH, ME 04105
2550 DENALI STREET
SUITE 200
ANCHORAGE, AK 99503

DESC 20UX
INSTALL ADDITIVE INJECTION SYSTEM
MISAWA AIR BASE, JAPAN

SDA AND CI/LI STORAGE TANK DETAILS

SHEET ID
M-505

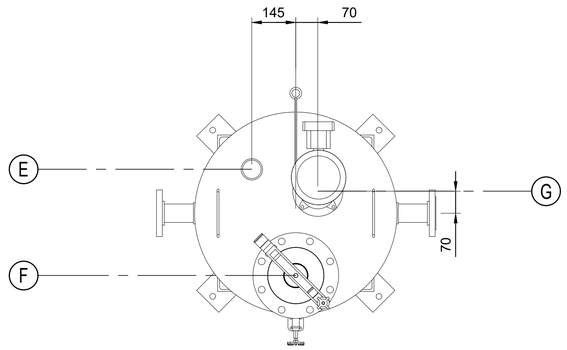

1 CI/LI ADDITIVE MIX TANK (MT-202) DETAIL
SCALE: 1:10
0 200 400mm

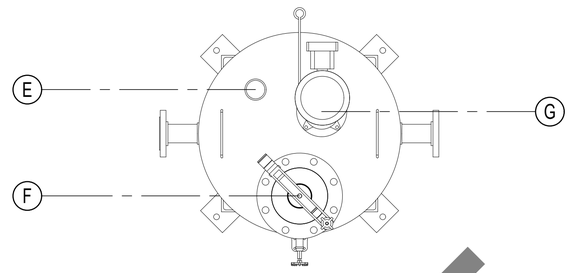

2 SDA ADDITIVE MIX TANK (MT-201) DETAIL
SCALE: 1:10
0 200 400mm

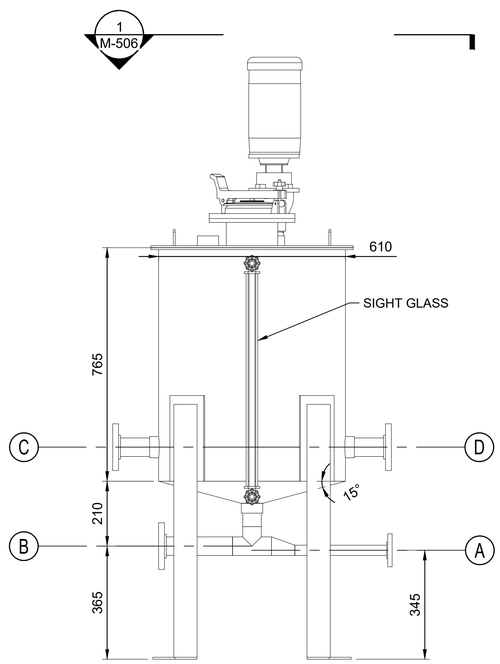

3 CI/LI ADDITIVE MIX TANK (MT-202) ELEVATION
SCALE: 1:10
0 200 400mm

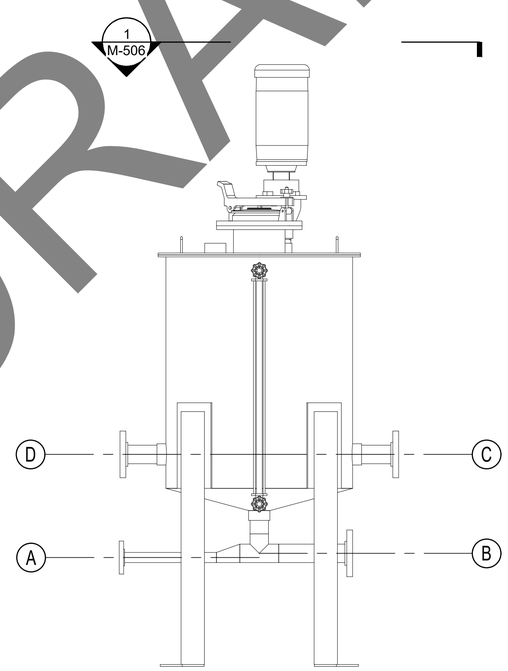

4 SDA ADDITIVE MIX TANK (MT-201) ELEVATION
SCALE: 1:10
0 200 400mm

SHEET NOTES
1. MT-201 AND MT-202 HAVE THE SAME DIMENSIONS AND ONLY DIFFER BY THE ROTATION OF THE BOTTOM NOZZLES.
2. COORDINATE TANK ANCHOR SIZE AND LOCATIONS WITH TANK MANUFACTURER WHEN ANCHORING TO CONCRETE SLAB.
3. TANKS AND TANK SUPPORTS MUST BE CONSTRUCTED OF 304L STAINLESS STEEL.
4. PROVIDE MIX TANKS WITH A FREE (ATMOSPHERIC) VENT WITH WEATHERHOOD. VENTS MUST EXTEND OUTSIDE BUILDING.
5. REFER TO EQUIPMENT SCHEDULES ON SHEET M-601 FOR ADDITIONAL TANK AND MIXER INFORMATION.
6. THE TANK LID, MIXER, AND HATCH MUST BE VAPOR TIGHT.

CI/LI TANK NOZZLE SCHEDULE

	QTY	SIZE	TYPE	REMARKS
A	1	DN25	RFSW	MIX SUPPLY
B	1	DN50	RFSW	DRAIN
C	1	DN50	RFSW	TANK FILL
D	1	DN50	RFSW	TANK FILL
E	1	DN50	FNPT	NORMAL VENT
F	1	DN100	RFSO	GAUGE HATCH
G	1	DN50	FNPT	MIXER

SDA TANK NOZZLE SCHEDULE

	QTY	SIZE	TYPE	REMARKS
A	1	DN25	RFSW	MIX SUPPLY
B	1	DN50	RFSW	DRAIN
C	1	DN50	RFSW	TANK FILL
D	1	DN50	RFSW	TANK FILL
E	1	DN50	FNPT	NORMAL VENT
F	1	DN100	RFSO	GAUGE HATCH
G	1	DN50	FNPT	MIXER

DRAFT

US Army Corps of Engineers®

MARK	DESCRIPTION	DATE

DESIGNED BY: M. FRITZ
DRAWN BY: M. FRITZ
CHECKED BY: K. WARING
SUBMITTED BY:
SIZE: ISO A1
FILE NAME: DESC20UX-M-506.dwg
ISSUE DATE: FEBRUARY 2022
SOLICITATION NO.: -
CONTRACT NO.: W912HV-17-D-0007
DRAWING CODE: -

U.S. ARMY CORPS OF ENGINEERS
JAPAN DISTRICT
APO AP 96343-5010

ENTERPRISE ENGINEERING, INC.
2550 CUSHELL STREET
SUITE 200
ANCHORAGE, AK 99503
400 US ROUTE 1
NORTH SUITE B
FALMOUTH, ME 04105

DESC: 20UX
INSTALL ADDITIVE INJECTION SYSTEM
MISAWA AIR BASE, JAPAN

SDA AND CI/LI ADDITIVE MIX TANK DETAILS

SHEET ID
M-506

PUMP SCHEDULE

PUMP TAG	DESCRIPTION	PUMP PERFORMANCE						CONNECTION SIZES		ELECTRICAL				REMARKS
		TYPE	FLUID TYPE	SG	FLOW RATE	HEAD	NPSHa	INLET	OUTLET	MOTOR	VOLTAGE	PHASE	Hz	
OP-201	FSII OFFLOAD PUMP	SLIDING-VANE POSITIVE DISPLACEMENT	FSII	1.025	475 L/MIN (125 GPM)	350 kPa (50 PSI)	AMPLE	DN80 ASME 150#	DN80 ASME 150#	7.5 kW (10 HP)	480 VAC	3Ø	50	CLASS 1 DIV 1 GROUP D. 350 kPa (50 PSI) INTERNAL RELIEF VALVE SET PRESSURE. 316 STAINLESS STEEL CONSTUCTION.
AP-201	FSII CHARGE ADDITIVE PUMP	SLIDING-VANE POSITIVE DISPLACEMENT	FSII	1.025	38 L/MIN (10 GPM)	175 kPa (25 PSI)	AMPLE	DN32 ASME 150#	DN32 ASME 150#	0.75 kW (1 HP)	120 VAC	1Ø	50	CLASS 1 DIV 1 GROUP D. 175 kPa (25 PSI) INTERNAL RELIEF VALVE SET PRESSURE. 316 STAINLESS STEEL CONSTRUCTION.
AP-202	FSII CHARGE ADDITIVE PUMP	SLIDING-VANE POSITIVE DISPLACEMENT	FSII	1.025	38 L/MIN (10 GPM)	175 kPa (25 PSI)	AMPLE	DN32 ASME 150#	DN32 ASME 150#	0.75 kW (1 HP)	120 VAC	1Ø	50	SAME AS AP-201
AP-203	CI/LI ADDITIVE MIX PUMP	SLIDING-VANE POSITIVE DISPLACEMENT	CI/LI	0.92	38 L/MIN (10 GPM)	175 kPa (25 PSI)	AMPLE	DN32 ASME 150#	DN32 ASME 150#	0.75 kW (1 HP)	120 VAC	1Ø	50	CLASS 1 DIV 1 GROUP D. 175 kPa (25 PSI) INTERNAL RELIEF VALVE SET PRESSURE. 316 STAINLESS STEEL CONSTRUCTION.
DP-204	HAND-HELD ELECTRIC DRUM PUMP	DRUM PUMP	CI/LI	0.917	38 L/MIN (10 GPM)	69 kPa (10 PSI)	N/A	N/A	25mm HOSE BARB	0.56 kW (0.75 HP)	120 VAC	1Ø	50	CLASS 1 DIV 1 GROUP D. 316 STAINLESS STEEL CONSTRUCTION. 1,200 mm SUCTION TUBE LENGTH. PROVIDE WITH 3 m LONG HOSE WITH DISPENSING NOZZLE.
PU-211	BREAKOUT TANK MIXING FUEL PUMP	SLIDING-VANE POSITIVE DISPLACEMENT	JP-8	.814	38 L/MIN (10 GPM)	175 kPa (25 PSI)	AMPLE	DN25 NPT	DN25 NPT	0.75 kW (1 HP)	120 VAC	1Ø	50	175 kPa (25 PSI) INTERNAL RELIEF VALVE SET PRESSURE.

ADDITIVE INJECTOR SCHEDULE

EQUIPMENT TAG	DESCRIPTION	INFORMATION								REMARKS
		CONNECTION SIZE	MIN FLOW RATE	MAX FLOW RATE	DESIGN PRESSURE	FUEL TYPE	FSII INJECTION RATIO	CI/LI INJECTION RATIO	SDA INJECTION RATIO	
AI-201	POSITIVE DISPLACEMENT TYPE ADDITIVE INJECTOR	DN150 ASME 150#	380 L/MIN (100 GPM)	4,160 L/MIN (1,100 GPM)	1.9 MPa (275 PSI)	JET-A	1,000 PPM (NEAT)	30 PPM (DILUTED 1:1)	30 PPM (DILUTED 1:19)	THE FSII TARGET IS 1000 PPM AND DOES NOT REQUIRE DILUTION PRIOR TO INJECTION. THE CI/LI TARGET IS 15 PPM (NEAT) AND MUST BE DILUTED 1:1 WITH JET FUEL PRIOR TO INJECTION. THE SDA TARGET IS 1.5 PPM (NEAT) AND MUST BE DILUTED 1:19 WITH JET FUEL PRIOR TO INJECTION.
AI-202	POSITIVE DISPLACEMENT TYPE ADDITIVE INJECTOR	DN150 ASME 150#	380 L/MIN (100 GPM)	4,160 L/MIN (1,100 GPM)	1.9 MPa (275 PSI)	JET-A	1,000 PPM (NEAT)	30 PPM (DILUTED 1:1)	30 PPM (DILUTED 1:19)	SAME AS AI-201

MIXER SCHEDULE

MIXER TAG	DESCRIPTION	MIXER PERFORMANCE							MIX TANK CONNECTION	ELECTRICAL				REMARKS
		TYPE	VISCOSITY	SG	NO. OF IMPELLERS	IMPELLER DIA.	IMPELLER PUMP RATE	SHAFT SPEED		MOTOR	VOLTAGE	PHASE	Hz	
MX-201	SDA MIXER	GEAR DRIVE, SQUARE PITCH PROPELLOR	65 cP	0.9	1	127 mm (5 IN)	312 L/MIN (82 GPM)	290 RPM	DN50 MNPT	0.37 kW (0.5 HP)	208 VAC	3	50	SEALED MIXER WITH 5:1 GEARBOX FOR USE WITH SEALED MIX TANKS. CLASS 1 DIV 1 GROUP D MOTOR.
MX-202	CI/LI MIXER	GEAR DRIVE, SQUARE PITCH PROPELLOR	65 cP	0.9	1	127 mm (5 IN)	312 L/MIN (82 GPM)	290 RPM	DN50 MNPT	0.37 kW (0.5 HP)	208 VAC	3	50	SAME AS MX-201

FACTORY-FABRICATED FUEL TANK SCHEDULE

TANK	DESCRIPTION	CAPACITY	PRIMARY TANK LENGTH	PRIMARY TANK DIAMETER	SECONDARY TANK LENGTH	SECONDARY TANK DIAMETER	REMARKS
AT-201	FSII ADDITIVE STORAGE TANK	56.8 kL (15,000 GAL)	7,772 mm (25'-6")	3,048 mm (10'-0")	7,925 mm (26'-0")	3,073 mm (10'-1")	DOUBLE WALL, 304L STAINLESS STEEL CONSTRUCTION WITH INTEGRAL STEEL SUPPORT SADDLES. UL 142 LISTED FOR ABOVEGROUND INSTALLATION. SEE M-503 FOR TANK DETAILS.
AT-202	FSII ADDITIVE STORAGE TANK	56.8 kL (15,000 GAL)	7,772 mm (25'-6")	3,048 mm (10'-0")	7,925 mm (26'-0")	3,073 mm (10'-1")	SAME AS AT-201
AT-203	SDA ADDITIVE STORAGE TANK	415 L (120 GAL)	1,067 mm (3'-6")	762 mm (2'-6")	1,245 mm (4'-1")	914 mm (3'-0")	DOUBLE WALL, 304L STAINLESS STEEL CONSTRUCTION WITH INTEGRAL STEEL SUPPORT SADDLES. UL 2085 LISTED FOR ABOVEGROUND INSTALLATION. SEE M-505 FOR TANK DETAILS.
AT-204	CI/LI ADDITIVE STORAGE TANK	1,900 L (500 GAL)	1,651 mm (5'-5")	1,219 mm (4'-0")	1,829 mm (6'-0")	1,372 mm (4'-6")	DOUBLE WALL, 304L STAINLESS STEEL CONSTRUCTION WITH INTEGRAL STEEL SUPPORT SADDLES. UL 2085 LISTED FOR ABOVEGROUND INSTALLATION. SEE M-505 FOR TANK DETAILS.

MIX TANK SCHEDULE

TANK TAG	DESCRIPTION	CAPACITY	SIDE HEIGHT	INSIDE DIAMETER	REMARKS
MT-201	SDA ADDITIVE MIX TANK	210 L (55 GAL)	762 mm (2'-6")	610 mm (2'-0")	304L STAINLESS STEEL CONSTRUCTION, 15 DEGREE CONE-BOTTOM. SEE M-506 FOR TANK DETAILS.
MT-202	CI/LI ADDITIVE MIX TANK	210 L (55 GAL)	762 mm (2'-6")	610 mm (2'-0")	SAME AS MT-201

ADDITIVE FLOW METER SCHEDULE

METER TAG	DESCRIPTION	METER INFORMATION				REMARKS
		CONNECTION SIZE	MAX WORKING PRESSURE	MIN FLOW RATE	MAX FLOW RATE	
PDM-201	MIXING FUEL POSITIVE DISPLACEMENT METER FOR SDA TANK	DN50 SOCKET WELD	1 MPa (150 PSI)	19 L/MIN (5 GPM)	230 L/MIN (60 GPM)	MECHANICAL REGISTER, MECHANICAL PRE-SET COUNTER, AND MECHANICAL PRE-SET VALVE
PDM-202	MIXING FUEL POSITIVE DISPLACEMENT METER FOR CI/LI TANK	DN50 SOCKET WELD	1 MPa (150 PSI)	19 L/MIN (5 GPM)	230 L/MIN (60 GPM)	MECHANICAL REGISTER, MECHANICAL PRE-SET COUNTER, AND MECHANICAL PRE-SET VALVE
PDM-203	CI/LI ADDITIVE POSITIVE DISPLACEMENT METER	DN50 SOCKET WELD	1 MPa (150 PSI)	19 L/MIN (5 GPM)	230 L/MIN (60 GPM)	MECHANICAL REGISTER, MECHANICAL PRE-SET COUNTER, AND MECHANICAL PRE-SET VALVE

DRAFT

US Army Corps of Engineers®

MARK	DESCRIPTION	DATE

ISSUE DATE: FEBRUARY 2022
SOLICITATION NO.: -
CONTRACT NO.: W912HV-17-D-0007
DRAWING CODE: -
FILE NAME: DESC20UX-M-601.dwg
SIZE: ISO A1

DESIGNED BY: C.SCHIEWMAN
DRAWN BY: C.SCHIEWMAN
CHECKED BY: M.FRITZ
SUBMITTED BY: K.WARING

U.S. ARMY CORPS OF ENGINEERS
POS-PACIFIC OCEANS DISTRICT
APO AP 96343-5010

ENTERPRISE ENGINEERING, INC.
2800 CUSHMAN STREET
SUITE 200
ANCHORAGE, AK 99503
400 US ROUTE 1
NORTH SUITE B
FALMOUTH, ME 04105

DESC 20UX
INSTALL ADDITIVE INJECTION SYSTEM
MISAWA AIR BASE, JAPAN

MECHANICAL POL SCHEDULE

SHEET ID
M-601

SEQUENCE OF OPERATIONS- ADDITIVE INJECTION FACILITY

THE FOLLOWING SEQUENCE OUTLINES THE OPERATIONAL REQUIREMENTS FOR ADDITIZING FUEL DURING A RECEIPT OPERATION FROM THE HACHINOHE TERMINAL OR THE TRUCK OFFLOAD FACILITY TO TANK FARM 2. THE SYSTEM IS COMPRISED OF TWO ADDITIVE INJECTORS EACH DESIGNED TO TRANSFER FUEL AT A RATE OF UP TO 3,030 L/min (800 GPM). FUEL ADDITIZATION IS RELIANT ON AUTOMATIC AND MANUAL OPERATIONS, INCLUDING RADIO CALLS BETWEEN BUILDING 1150 AND THE RECEIVING FACILITY CONTROL ROOM.

NOTE: THERE IS NO AUTOMATIC COMMUNICATION BETWEEN BUILDING 1150 AND THE HACHINOHE TERMINAL OR BETWEEN BUILDING 1150 AND THE RECEIVING TANK FARM 2. THE EFSO SYSTEM AT EACH FACILITY IS INDEPENDENT AND THERE IS NO LINK TO THE CONTROLS SYSTEM OR ALARMS AT BUILDING 1150.

FUEL TRANSFER THROUGH BUILDING 1150

1. DESIGNATE A RECEIPT TANK FOR THE RECEIPT OPERATION. RADIO CALL THE RECEIVING FACILITY TO VERIFY THE INTENDED RECEIPT TANK HAS SUFFICIENT ULLAGE AVAILABLE FOR THE TRANSFER.
2. ACCORDING TO THE SELECTED OPERATION AND RECEIPT FACILITY, ALIGN SYSTEM VALVES AS INDICATED IN THE ADDITIVE INJECTION VALVE ALIGNMENT TABLE LOCATED ON SHEET M-702.
   A. FOR ADDITIZING FUEL RECEIVED FROM HACHINOHE, ALIGN SYSTEM VALVES ACCORDING TO "TRANSFER FROM HACHINOHOE - ADDITIZED (AI-202)." FOR ADDITIZING FUEL FROM HACHINOHE USING THE FILTERS AND INJECTOR FOR THE TRUCK OFFLOAD, ALIGN SYSTEM VALVES ACCORDING TO "TRANSFER FROM HACHINOHE - ADDITIZED (AI-201)."
   B. FOR ADDITIZING FUEL FROM THE TRUCK OFFLOAD, ALIGN SYSTEM VALVES ACCORDING TO "TRANSFER FROM TRUCK OFFLOAD - ADDITIZED (AI-201)."
   C. FOR TRANSFERRING FUEL FROM HACINOHE THAT WILL NOT BE ADDITIZED, ALIGN SYSTEM VALVES ACCORDING TO "TRANSFER FROM HACHINOHE - NON ADDITIZED." FOR TRANSFERRING FUEL FROM THE TRUCK OFFLOAD THAT WILL NOT BE ADDITIZED, ALIGN SYSTEM VALVES ACCORDING TO "TRANSFER FROM TRUCK OFFLOAD - NON ADDITIZED."
   D. THE ADDITIVE INJECTION PANEL (AIP) WILL NOT INDICATE AN ERROR OF VALVE ALIGNMENT AS THEY ARE MANUALLY OPERATED VALVES.

   NOTE: THE ADDITIVE INJECTORS ARE MECHANICAL FLUID-POWERED SYSTEM THAT WILL ADDITIZE THE FUEL AS IT FLOWS THROUGH THE UNIT.
3. JET A-1 FUEL RECEIPTS MUST BE ADDITIZED BEFORE TRANSFERRING TO A BULK STORAGE RECEIPT TANK. REFER TO THE SECTION TITLED FUEL ADDITIZATION FOR OPERATIONAL PROCEDURES. ENSURE THAT ADEQUATE ADDITIVE HAS BEEN MIXED AND IS READY TO BE INJECTED.
   A. IF THERE IS NOT SUFFICIENT ADDITIVE MIX FOR SDA (STATIC DISSIPATER ADDITIVE) AND CI/LI (CORROSION INHIBITOR/LUBRICITY IMPROVER), ADDITIVE MUST BE PRE-MIXED PRIOR TO INJECTION DURING THE TRANSFER OPERATION. REFER TO THE SECTION TITLED ADDITIVE MIXING FOR PRE-MIXING OPERATIONAL PROCEDURES.
4. FOR RECEIVING FUEL FROM THE HACHINOHE TERMINAL, REFER TO THE BASE EXISTING SEQUENCE OF OPERATIONS.
   A. THROUGH RADIO CALLS TO THE RECEIPT FACILITY, MONITOR THE VOLUME OF FUEL TRANSFER. NOTE THE HACHINOHE TERMINAL IS RESPONSIBLE FOR SHUTTING DOWN THE TRANSFER OPERATION.
5. FOR OFFLOADING AND TRANSFERRING FUEL FROM THE TRUCK OFFLOAD SYSTEM, REFER TO THE BASE EXISTING SEQUENCE OF OPERATIONS.
6. WHEN ALL OFFLOADING ACTIVITIES ARE COMPLETE, RETURN ALL MANUAL VALVES TO THEIR NORMALLY CLOSED/NORMALLY OPEN POSITIONS.

FUEL ADDITIZATION

FUEL STORED AT MISAWA IN THE BULK STORAGE TANKS MUST BE JP-8 (F-34) OR ADDITIZED JET A-1 (F-24). THE FOLLOWING SEQUENCE OUTLINES THE OPERATIONAL REQUIREMENTS FOR ADDITIZING JET A-1 TO MEET MILITARY SPECIFICATION (F-24).

NOTE: ADDITIVE MIXING MUST OCCUR PRIOR TO THE FUEL RECEIPT OPERATION. REFER TO THE SECTION TITLED ADDITIVE MIXING FOR PRE-MIXING OPERATIONAL PROCEDURES.

1. PRIOR TO JET-A RECEIPT, ENSURE THERE IS ADEQUATE ADDITIVE MIX VOLUME IN BOTH THE SDA AND CI/LI MIX TANKS FOR THE TRANSFER OPERATION. OPEN MANUAL VALVES FOR FUEL PATH TO FLOW THROUGH THE ADDITIVE INJECTORS.
2. ON THE ADDITIVE INJECTION PANEL (AIP), TURN THE MODE SELECT SWITCH TO "ADDITIVE INJECTION"
3. SELECT THE DESIGNATED FSII ISSUE TANK USING THE SELECTOR SWITCH ON THE ADDITIVE INJECTION PANEL. THIS ENABLES THE FSII CHARGE PUMP, AP-201 OR AP-202 AND OPENS THE RESPECTIVE ANTI-SIPHON SOLENOID VALVE WHEN THE ADDITIVE INJECTOR FLOW SWITCH (FSL-201 OR FSL-202) SENSES FLOW.
4. VERIFY OPEN ALIGNMENT OF MANUAL VALVES FROM THE FSII TANK TO THE INJECTOR AND THROUGH THE RETURN LOOP.
5. ALIGN MINOR PIPING VALVES TO ISSUE MIXED ADDITIVES FROM THE ADDITIVE MIX TANKS TO THE INJECTOR.
6. TRANSFER JET A-1 IN ACCORDANCE WITH THE SECTION TITLED FUEL TRANSFER THROUGH BUILDING 1150.
7. WHEN THE ADDITIVE INJECTOR FLOW SWITCH (FSL-201 OR FSL-202) SENSES FLOW, A SIGNAL WILL TURN ON THE FSII CHARGE PUMP, OPENING THE ANTI-SIPHON SOLENOID VALVE, AND FSII WILL CIRCULATE THROUGH THE INJECTOR AND BACK TO THE FSII TANK.
8. ONCE THE FUEL TRANSFER OPERATION IS COMPLETE AND THERE IS NO FLOW THROUGH THE ADDITIVE INJECTOR FOR A PERIOD OF 30 SECONDS (FIELD ADJUST TIME DURING START-UP AND COMMISSIONING), THE FSL-201 OR FSL-202 WILL SHUT DOWN THE FSII CHARGE PUMP DUE TO LOW/NO FLOW.
9. TURN THE MODE SELECT SWITCH TO "OFF" AND RETURN VALVES TO THEIR NORMALLY CLOSED/OPEN POSITIONS.

ADDITIVE MIXING

MIXING CORROSION INHIBITOR/LUBRICITY IMPROVER (CI/LI)

1. DETERMINE THE AMOUNT OF CI/LI NEEDED TO ADDITIZE THE FULL VOLUME OF JET A TO BE TRANSFERRED. CI/LI HAS A TARGET INJECTION RATE OF 15 PPM, SO MULTIPLY THE ANTICIPATED VOLUME TO BE RECEIVED (IN GALLONS) BY 0.000015 TO DETERMINE THE MINIMUM VOLUME OF PURE CI/LI ADDITIVE REQUIRED FOR THE RECEIPT. ROUND THE MINIMUM VOLUME UP TO THE NEAREST GALLON.
2. PRIOR TO INJECTION, THE CI/LI MUST BE PRE-MIXED WITH FUEL AT A MIXING RATIO OF 1:1. THEREFORE, PRIOR TO RECEIPT, THE OPERATOR MUST MIX THE VOLUME OF CI/LI CALCULATED IN STEP 1 ABOVE, WITH AN EQUAL VOLUME OF JET A-1.
3. USING THE SIGHT GLASS, ENSURE THAT THERE IS ENOUGH ULLAGE IN THE CI/LI MIX TANK (MT-202) TO PRE-MIX THE DESIRED CI/LI WITH FUEL FOR THE VOLUMES CALCULATED IN STEP 1 AND 2 ABOVE.
4. CLOSE THE BALL VALVE THAT ISSUES MIXED ADDITIVE TO THE ADDITIVE INJECTOR.
5. ALIGN MINOR PIPING VALVES FROM THE CI/LI STORAGE TANK (AT-204) AND PUMP (AP-203) TO THE CI/LI MIX TANK (MT-202).
6. RESET THE CI/LI METER (PDM-203) TO ZERO AND PROGRAM THE METER PRE-SET SHUTOFF VOLUME FOR THE INTENDED AMOUNT OF ADDITIVE TO BE TRANSFERRED TO THE MIX TANK, AS CALCULATED IN STEP 1 ABOVE.
7. TURN ON THE CI/LI STORAGE PUMP (AP-203) WITH THE LOCAL ON-OFF SWITCH TO TRANSFER FROM THE STORAGE TANK (AT-204) TO THE MIX TANK (MT-202). CI/LI ADDITIVE WILL FLOW INTO THE MIX TANK UNTIL THE METER AND PRE-SET STOP VALVE REACHES THE SET POINT AND SHUTS OFF FLOW.
8. TURN OFF THE CI/LI STORAGE PUMP (AP-203) AND CLOSE THE MINOR PIPING VALVES FROM THE CI/LI STORAGE TANK (AT-204) TO THE CI/LI MIX TANK (MT-202).
9. RESET THE MIXING FUEL METER (PDM-202) TO ZERO AND PROGRAM THE METER PRE-SET SHUTOFF VOLUME FOR THE INTENDED AMOUNT OF MIXING FUEL TO BE TRANSFERRED TO THE MIX TANK AS CALCULATED IN STEP 1 ABOVE (SAME AS THE VOLUME OF CI/LI JUST INTRODUCED INTO THE MIX TANK).
10. ALIGN MANUAL VALVES TO ALLOW MIXING FUEL TO FLOW FROM THE BREAKOUT TANK MIXING FUEL PUMP INTO THE CI/LI MIX TANK (MT-202) .
11. TURN ON THE MIXING FUEL PUMP (PU-11) WITH THE LOCAL ON-OFF SWITCH TO TRANSFER FUEL FROM THE BREAKOUT TANK TO THE CI/LI MIX TANK (MT-202). FUEL WILL FLOW INTO THE MIX TANK UNTIL THE METER AND PRE-SET STOP VALVE REACHES THE SET POINT AND SHUTS OFF FLOW.
12. TURN OFF THE MIXING FUEL PUMP (PU-11) AND CLOSE THE MINOR PIPING VALVES FROM THE BREAKOUT TANK TO THE CI/LI MIX TANK (MT-202).
13. TO MIX THE FUEL AND CI/LI ADDITIVE, TURN ON THE MIXER (MX-202) WITH THE LOCAL ON-OFF SWITCH NEXT TO THE MIX TANK AND LET RUN FOR 5 MINUTES.
14. AFTER 5 MINUTES, SHUT DOWN THE MIXER BY TURNING THE LOCAL SWITCH TO “OFF”.
15. OPEN THE ISSUE VALVE FOR ADDITIVE MIX TO BE INJECTED THROUGH THE ADDITIVE INJECTORS.

MIXING STATIC DISSIPATER ADDITIVE (SDA)

1. DETERMINE THE AMOUNT OF SDA NEEDED TO ADDITIZE THE FULL VOLUME OF JET A TO BE TRANSFERRED. SDA HAS A TARGET INJECTION RATE OF 1.5 PPM, SO MULTIPLY THE ANTICIPATED VOLUME TO BE RECEIVED (IN GALLONS) BY 0.0000015 TO DETERMINE THE MINIMUM VOLUME OF PURE SDA REQUIRED FOR THE RECEIPT. ROUND THE MINIMUM VOLUME UP TO THE NEAREST GALLON.
2. PRIOR TO INJECTION, THE SDA MUST BE PRE-MIXED WITH FUEL AT A MIXING RATIO OF 1:19. DETERMINE THE VOLUME OFJET A-1 NEEDED TO MIX BY MULTIPLYING THE REQUIRED AMOUNT OF PURE SDA (ROUNDED TO THE NEAREST GALLON) BY 19.
3. USING THE SIGHT GLASS, ENSURE THAT THERE IS ENOUGH ULLAGE IN THE MIX TANK (MT-201) TO PRE-MIX THE DESIRED SDA WITH FUEL FOR THE VOLUMES CALCULATED IN STEPS 1 AND 2 ABOVE.
4. CLOSE THE BALL VALVE THAT ISSUES MIXED ADDITIVE TO THE ADDITIVE INJECTOR.
5. SDA IS STORED IN THE ADDITIVE STORAGE TANK AT-203. ADDITIVE IS ISSUED FROM THE TANK BY A ROTARY HAND PUMP INTO A MEASURING DEVICE. MANUALLY MEASURE OUT THE DESIRED AMOUNT OF SDA AS CALCULATED IN STEP 1 ABOVE AND POUR IT INTO THE MIX TANK (MT-203) THROUGH THE 100mm (4-INCH) GAUGING HATCH.
6. RESET THE MIXING FUEL METER (PDM-201) TO ZERO AND PROGRAM THE METER PRE-SET SHUTOFF VOLUME FOR THE INTENDED AMOUNT OF MIXING FUEL TO BE TRANSFERRED TO THE MIX TANK AS CALCULATED IN STEP 2 ABOVE. (NOTE: THIS IS A DIFFERENT VOLUME THAN THE SDA JUST TRANSFERRED INTO THE MIX TANK.)
7. ALIGN MANUAL VALVES TO ALLOW MIXING FUEL TO FLOW FROM THE BREAKOUT TANK MIXING FUEL PUMP INTO THE SDA MIX TANK (MT-201) .
8. TURN ON THE MIXING FUEL PUMP (PU-11) WITH THE LOCAL ON-OFF SWITCH TO TRANSFER FUEL FROM THE BREAKOUT TANK TO THE SDA MIX TANK (MT-201). FUEL WILL FLOW INTO THE MIX TANK UNTIL THE METER AND PRE-SET STOP VALVE REACHES THE SET PONT AND SHUTS OFF FLOW.
9. TURN OFF THE MIXING FUEL PUMP (PU-11) AND CLOSE THE MINOR PIPING VALVES FROM THE BREAKOUT TANK TO THE SDA MIX TANK (MT-201).
10. TO MIX THE FUEL AND ADDITIVE, TURN ON THE MIXER (MX-201) WITH THE LOCAL ON-OFF SWITCH NEXT TO THE MIX TANK AND LET RUN FOR 5 MINUTES.
11. AFTER 5 MINUTES, SHUT DOWN THE MIXER BY TURNING THE LOCAL SWITCH TO OFF.
12. OPEN THE ISSUE VALVE FOR ADDITIVE MIX TO BE INJECTED THROUGH THE ADDITIVE INJECTORS.

FSII ADDITIVE OFFLOAD

THE OFFLOAD POINT FOR RECEIVING FSII IS LOCATED ON THE TRUCK OFFLOAD ISLAND. THE FOLLOWING SEQUENCE OUTLINES THE OPERATIONAL REQUIREMENTS FOR OFFLOADING FSII USING THE POSITIVE DISPLACEMENT OFFLOAD PUMP, OP-201.

1. POSITION THE TRUCK OR DELIVERY CONTAINER AT FSII OFFLOAD AND CONNECT THE GROUNDING CLAMP FROM THE GROUNDING WHEEL TO THE TRUCK OR DELIVERY CONTAINER.
2. ATTACH THE OFFLOAD HOSE TO THE OFFLOAD PUMP.
3. OPEN THE MANUAL BALL VALVE AND VERIFY ALL VALVES ARE ALIGNED FOR TRANSFERRING ADDITIVE FROM THE TRUCK OR DELIVERY CONTAINER TO THE FSII STORAGE TANK(S) (AT-201 OR AT-202).
4. VERIFY THE INTENDED RECEIPT TANK HAS SUFFICIENT ULLAGE AVAILABLE FOR THE TRANSFER OPERATION.
5. TURN THE LOCAL ON-OFF SWITCH FOR THE OFFLOAD PUMP TO “ON” TO START THE PUMP AND TRANSFER FUEL FROM THE OFFLOAD POINT TO THE DESIGNATED STORAGE TANK. CONFIRM THAT ADDITIVE IS FLOWING THROUGH THE SIGHT FLOW INDICATOR.
6. UPON COMPLETION OF TRANSFER, TURN THE OFFLOAD PUMP HAND SWITCH TO “OFF” TO STOP THE OFFLOAD PUMP.
7. RETURN MANUAL VALVES TO THEIR NORMALLY CLOSED/OPEN POSITIONS, DISCONNECT AND DRAIN THE HOSE AND STOW THE GROUNDING CLAMP.

FSII TANK-TO-TANK TRANSFER

THE FOLLOWING SEQUENCE OUTLINES THE OPERATIONAL REQUIREMENTS FOR TRANSFERRING FSII BETWEEN THE TWO STORAGE TANKS, AT-201 AND AT-202.

1. ON THE ADDITIVE INJECTION PANEL (AIP), TURN THE MODE SELECT SWITCH TO "TANK-TO-TANK TRANSFER".
2. SELECT THE DESIGNATED FSII ISSUE TANK USING THE SELECTOR SWITCH ON THE ADDITIVE INJECTION PANEL. THIS ENABLES THE RESPECTIVE FSII CHARGE PUMP AND ASSOCIATED ANTI-SIPHON SOLENOID VALVE FOR THE SELECTED FSII ISSUE TANK.
3. ALIGN MANUAL VALVES TO DIRECT ADDITIVE FROM THE ISSUE TANK TO THE OTHER. OPEN THE NORMALLY CLOSED CROSS-OVER VALVE BETWEEN AT-201 AND AT-202.
4. VERIFY THE INTENDED RECEIPT TANK HAS SUFFICIENT ULLAGE AVAILABLE FOR THE TRANSFER OPERATION.
5. INITIATE A PUMP START BY DEPRESSING THE START PUSHBUTTON.
6. MONITOR THE FUEL LEVEL IN THE SOURCE AND RECEIPT TANKS DURING THE TRANSFER OPERATION.

   NOTE: THERE IS NO OVERFILL PREVENTION VALVE TO STOP THE TANK FROM OVERFILLING. IF THE TANK REACHES HIGH-HIGH LEVEL, THE ADDITIVE INJECTION PANEL WILL DISABLE THE FSII CHARGE PUMPS. THE CHARGE PUMPS CANNOT BE RESTARTED UNTIL THE ALARM CONDITION IS CORRECTED.
7. ONCE THE TRANSFER OPERATION IS COMPLETE, TURN OFF FSII CHARGE PUMP BY DEPRESSING THE STOP PUSHBUTTON. TURN THE MODE SELECT SWITCH TO "OFF" AND RETURN MANUAL VALVES TO THEIR NORMALLY CLOSED/NORMALLY OPEN POSITIONS.

OVERFILL PREVENTION AND ALARM CONDITIONS FOR THE ADDITIVE INJECTION SYSTEM AT BUILDING 1150

EACH FSII STORAGE TANK IS PROVIDED WITH A FLOAT-TYPE LEVEL ALARM SYSTEM THAT MONITORS THE TANK LEVEL. THE FSII TANK FLOAT SWITCHES ARE PROVIDED AS A SYSTEM SAFEGUARD TO PREVENT POTENTIAL OVERFILLS. THE FOLLOWING OPERATIONS WILL RESULT IN ALARM CONDITIONS.

1. IF THE LIQUID LEVEL IN A FSII TANK RISES TO THE HIGH LEVEL SWITCH SET POINT ELEVATION, THE HIGH LEVEL ALARM WILL ACTIVATE CONSISTING OF AN INDICATOR LIGHT AND BUZZER AT THE ADDITIVE INJECTION PANEL (AIP). THE HIGH LEVEL ALARM CAN BE SILENCED BY DEPRESSING THE ACKNOWLEDGE SWITCH.

   NOTE: THE HIGH LEVEL INDICATOR LIGHT WILL CONTINUE TO ILLUMINATE UNTIL THE ALARM CONDITION IS CORRECTED.
2. IF THE LIQUID LEVEL IN A FSII TANK RISES TO THE OVERFILL VALVE SHUT-OFF ELEVATION, THE OVERFILL VALVE WILL BEGIN TO CLOSE. THE OVERFILL PREVENTION VALVE MUST FULLY CLOSE BEFORE THE ACTIVATION OF THE HIGH-HIGH LEVEL SWITCH. WHEN THE FUEL LEVEL DROPS BELOW THE OVERFILL VALVE SHUT-OFF ELEVATION, THE OVERFILL PREVENTION VALVE WILL BEGIN TO OPEN.
3. IF THE LIQUID LEVEL IN A FSII TANK RISES TO THE HIGH-HIGH LEVEL SWITCH SET POINT ELEVATION, THE HIGH-HIGH LEVEL ALARM WILL ACTIVATE CONSISTING OF AN INDICATOR LIGHT AND BUZZER AT THE ADDITIVE INJECTION PANEL (AIP) AND AN EXTERIOR STROBE AND AUDIBLE ALARM. THE OFFLOAD PUMP AND FSII ADDITIVE PUMPS WILL BE DISABLED. THE HIGH-HIGH LEVEL ALARM CAN BE SILENCED BY DEPRESSING THE ACKNOWLEDGE SWITCH.

   NOTE: THE HIGH-HIGH LEVEL INDICATOR LIGHT AND STROBE WILL CONTINUE TO ILLUMINATE AND THE PUMPS WILL BE PREVENTED FROM STARTING AGAIN UNTIL THE ALARM CONDITION IS CORRECTED.
4. IF THE LIQUID LEVEL IN A FSII TANK FALLS TO THE LOW LEVEL SWITCH SET POINT ELEVATION, THE LOW LEVEL ALARM WILL ACTIVATE CONSISTING OF AN INDICATOR LIGHT AND BUZZER ON THE ADDITIVE INJECTOR PANEL (AIP). THE LOW LEVEL ALARM CAN BE SILENCED BY DEPRESSING THE ACKNOWLEDGE SWITCH.

   NOTE: THE LOW LEVEL INDICATOR LIGHT WILL CONTINUE TO ILLUMINATE UNTIL THE ALARM CONDITION IS CORRECTED.
5. IF THE LIQUID LEVEL IN A FSII TANK FALLS TO THE LOW-LOW LEVEL SWITCH ELEVATION SET POINT, THE LOW-LOW LEVEL ALARM WILL ACTIVATE CONSISTING OF AN INDICATOR LIGHT AND BUZZER ON THE ADDITIVE INJECTION PANEL (AIP). THE FSII CHARGE PUMP WILL BE DISABLED AND PREVENTED FROM STARTING AUTOMATICALLY. THE LOW-LOW LEVEL ALARM CAN BE SILENCED BY DEPRESSING THE ACKNOWLEDGE SWITCH.

   NOTE: THE LOW-LOW LEVEL INDICATOR LIGHT WILL CONTINUE TO ILLUMINATE AND THE CHARGE PUMP(S) WILL BE PREVENTED FROM STARTING AGAIN UNTIL THE ALARM CONDITION IS CORRECTED.

DRAFT

US Army Corps of Engineers®

MARK	DESCRIPTION	DATE

ISSUE DATE: FEBRUARY 2022
SOLICITATION NO.: -
CONTRACT NO.: W912HV-17-D-0007
DRAWING CODE: -
DESIGNED BY: C.SCHIERMAN
DRAWN BY: C.SCHIERMAN
CHECKED BY: M.FRITZ
SUBMITTED BY: K.WARING
SIZE: ISO A1
FILE NAME: DESC20UX-M-701.dwg

U.S. ARMY CORPS OF ENGINEERS
JAPAN DISTRICT
APO AP 96343-5010

ENTERPRISE ENGINEERING, INC.
2525 GAMBELL STREET
SUITE 200
ANCHORAGE, AK 99503

400 US ROUTE 1
NORTH SUITE B
FALMOUTH, ME 04105

DESC 20UX
INSTALL ADDITIVE INJECTION SYSTEM
MISAWA AIR BASE, JAPAN

SEQUENCE OF OPERATIONS

SHEET ID
M-701

ADDITIVE INJECTION TRANSFER OPERATION VALVE POSITIONS

	TRANSFER FROM HACHINOHE - ADDITIZED (AI-202)	TRANSFER FROM HACHINOHE - ADDITIZED (AI-201)	TRANSFER FROM HACHINHOE - NON-ADDITIZED	TRANSFER FROM TRUCK OFFLOAD - ADDITIZED (AI-201)	TRANSFER FROM TRUCK OFFLOAD - NON-ADDITIZED	MIXING FUEL TRANSFER TO MIX TANKS
V004		O				
V005		O				
V006			O			X
V007		X				
V008					O	
V015						O
V023	X					
V024	X					X
V026				X	O	
V034		X				
V201	O		X			X
V202	O					
V203		O		O	X	
V204		O		O		
V205				X		
V206						
V207		O		O		
V208	O					
V209						O
V210						X

TABLE NOTES
1. X = CLOSED
2. O = OPEN
3. REFER TO FLOW DIAGRAMS ON SHEETS M-011 AND M-015 FOR VALVE LOCATIONS.
4. THIS TABLE ASSUMES ALL FUEL WILL BE ROUTED THROUGH THE FILTERS.
5. THIS TABLE ASSUMES TRANSFERRING FUEL OUT OF THE FILTER BUILDING USING THE TRANSFER PIPELINES USED DURING NORMAL OPERATIONS. VALVE POSITIONS MAY BE ALTERED TO DIRECT FLOW THROUGH OTHER TRANSFER LINES.

DRAFT

US Army Corps of Engineers®

MARK	DESCRIPTION	DATE

DESIGNED BY: C.SCHIEWMAN
DRAWN BY: C.SCHIEWMAN
CHECKED BY: M.FRITZ
SUBMITTED BY: K.WARING
SIZE: ISO A1
ISSUE DATE: FEBRUARY 2022
SOLICITATION NO.: -
CONTRACT NO.: W912HV-17-D-0007
DRAWING CODE: -
FILE NAME: DESC20UX-M-702.dwg

U.S. ARMY CORPS OF ENGINEERS
JAPAN DISTRICT
APO AP 96343-5010

ENTERPRISE ENGINEERING, INC.
400 US ROUTE 1
NORTH SUITE B
FALMOUTH, ME 04105
2550 CARDELL STREET
SUITE 200
ANCHORAGE, AK 99503

DESC 20UX
INSTALL ADDITIVE INJECTION SYSTEM
MISAWA AIR BASE, JAPAN

ADDITIVE INJECTION TRANSFER OPERATIONS
VALVE POSITION TABLE

SHEET ID
M-702

EXHAUST FAN SCHEDULE

MARK	AREA SERVED	BUILDING	QTY	AIR FLOW CMH	ESP Pa	FAN TYPE	ELECTRICAL CAPACITY				REMARKS
							KW	V	PH	Hz	
EF 1	NEW FIRE SPRINKLER RISER ROOM	EXST FILTER SEPARATOR ROOM	1	107	50	PROPELLER WALL TYPE	0.02	100	1	50	COMPLETE WITH BACKDRAFT DAMPER, INSECT SCREEN AND RAINHOOD COVER.
EF 2	NEW ELECTRICAL ROOM	EXST FILTER SEPARATOR ROOM	1	143	50	PROPELLER WALL TYPE	0.02	100	1	50	COMPLETE WITH BACKDRAFT DAMPER, INSECT SCREEN AND RAINHOOD COVER.

NOTE: CONTRACTOR TO PROVIDE STEPDOWN TRANSFORMER 120V TO 100V FOR EF-1 AND EF-2.

UNIT HEATER SCHEDULE

MARK	AREA SERVED	BUILDING	QTY	HEATING CAPACITY kW	TYPE	PHYSICAL DIMENSION	ELECTRICAL CAPACITY			REMARKS
							V	PH	Hz	
UH 1	NEW FIRE SPRINKLER RISER ROOM	FIRE SPRINKLER RISER ROOM	1	0.50	WALL MTD ELECTRIC BASE BOARD CONVECTOR	635x85x260	200	1	50	COMPLETE WITH MOUNTING SUPPORT.

ELECTRIC DOMESTIC HOT WATER HEATER SCHEDULE

MARK	AREA SERVED	BUILDING	QTY	DESIGN TEMP LIMIT DEG C	DESIGN HOT WATER FLOW RATE, LPM	POWER INPUT kW	TYPE	PHYSICAL DIMENSION	ELECTRICAL CAPACITY			REMARKS
									V	PH	Hz	
EWH 1	EXST FILTER SEPARATOR ROOM AND OFF-LOADING AREA	FIRE SPRINKLER RISER ROOM	1	50	13.2	36	FLOOR MTD TANKLESS TYPE WATER HEATER	750x335x650	480	3	50	COMPLETE WITH THERMOSTATIC MIXING VALVE WITH SAFETY CONTROLS TO LIMIT THE TEMPERATURE AND PREVENT SCALDING.

PLUMBING FIXTURE SCHEDULE

FIXTURE	AREA SERVED	BUILDING	FLOW RATE, LPM	QTY	DESCRIPTION	REMARKS
EMERGENCY SHOWER/EYEWASH STATION (ES/EWS)	EXST FILTER SEPARATOR ROOM	EXST FILTER SEPARATOR ROOM	87	1	COMBINATION OF EMERGENCY SHOWER/ EYEWASH STATION	STANDARD STYLE, FREE STANDING WITH PEDESTAL MOUNTING.
EMERGENCY EYEWASH STATION (EWS)	OFF-LOADING AREA	OFF-LOADING AREA	11.4	1	EMERGENCY EYEWASH STATION WITH TEPID WATER SUPPLY FROM SPRINKLER RISER ROOM	FREEZE - RESISTANCE EYEWASH TYPE FOR PEDESTAL MOUNTING. FREEZE - RESISTANCE VALVE AND SUPPLY LINE ARE BURIED BELOW FROST LINE TO PROTECT AGAINST FREEZING.

DRAFT

MECHANICAL SCOPE OF WORK

A. EMERGENCY SHOWER AND EYEWASH STATI0N (ES/EWS) AT EXISTING FILTER SEPARATOR BUILDING

1. THE EXISTING FILTER SEPARATOR BUILDING WILL BE PROVIDED WITH STANDARD STYLE EMERGENCY SHOWER/EYEWASH STATION FOR PERSONNEL PROTECTION AGAINST OIL, MIST OR VAPORS. TANKLESS INSTANTANEOUS TYPE FLOOR MOUNTED HOT WATER HEATER LOCATED IN NEW FIRE SPRINKLER RISER ROOM WILL BE THE SOURCE OF TEPID WATER OF ES/EWS.

B. EMERGENCY EYEWASH STATI0N (EWS) AT OFF-LOADING AREA

1. THE OFF-LOADING AREA WILL BE PROVIDED WITH EMERGENCY EYEWASH STATION FOR PERSONNEL PROTECTION AGAINST OIL, MIST OR VAPORS. EMERGENCY EYEWASH SHALL BE FREEZE - RESISTANCE EYEWASH TYPE FOR PEDESTAL MOUNTING. FREEZE - RESISTANCE VALVE AND SUPPLY LINE ARE BURIED BELOW FROST LINE TO PROTECT AGAINST FREEZING. THE SOURCE OF TEPID WATER OF ES/EWS WILL ALSO BE SUPPLIED BY TANKLESS INSTANTANEOUS WATER HEATER FROM NEW FIRE SPRINKLER RISER ROOM.

C. VENTILATION SYSTEM AT NEW FIRE SPRINKLER RISER ROOM

1. THE NEW FIRE SPRINKLER SPRINKLER ROOM WILL BE PROVIDED WITH WALL MOUNTED PROPELLER TYPE EXHAUST FAN FOR HEAT REMOVAL AND SHALL BE ACTIVATED BY WALL MOUNTED THERMOSTAT 1500 MM FROM FINISH FLOOR LINE. WALL LOUVER FOR AIR INTAKE WILL BE PROVIDED (BY ARCH).

D. VENTILATION SYSTEM AT NEW ELECTRICAL ROOM

1. THE NEW FIRE SPRINKLER SPRINKLER ROOM WILL BE PROVIDED WITH WALL MOUNTED PROPELLER TYPE EXHAUST FAN FOR HEAT REMOVAL AND SHALL BE ACTIVATED BY WALL MOUNTED THERMOSTAT 1500 MM FROM FINISH FLOOR LINE. WALL LOUVER FOR AIR INTAKE WILL BE PROVIDED (BY ARCH).

E. HEATING SYSTEM AT NEW FIRE SPRINKLER RISER ROOM

1. THE NEW FIRE SPRINKLER RISER ROOM WILL BE PROVIDED WITH WALL MOUNTED TYPE ELECTRIC BASE BOARD CONVECTOR. UNIT HEATER SHALL BE CONTROLLED BY INTEGRAL THERMOSTAT CONTROLLER.

MECHANICAL NOTES

1. ALL INSTALLATION AND NEW WORK FOR THE PROJECT SHALL BE IN ACCORDANCE WITH THE CONTRACT DRAWINGS AND SPECIFICATIONS.
2. DAMAGED CAUSED BY REMOVAL OPERATIONS OR CONSTRUCTION IN ALL AREAS OF THE PROJECT SITE SHALL BE REPAIRED/RESTORED TO THE APPROXIMATE ORIGINAL CONDITIONS OR BETTER AND SATISFACTORY TO THE CONTRACTING OFFICER.
3. ANY DEVIATIONS FROM THE DRAWINGS WHICH ARE NECESSITATED BY FIELD CONDITIONS SHALL BE CALLED TO THE ATTENTION OF THE CONTRACTING OFFICER.
4. THE CONTRACTOR UPON COMPLETION OF ALL WORK IN THIS PROJECT SHALL LEAVE THE AREA CLEAN AND COMPLETE TO THE SATISFACTORY OF THE CONTRACTING OFFICER.
5. ALL INDICATED SIZE AND DIMENSIONS ARE IN MILLIMETERS UNLESS OTHERWISE NOTED.
6. ALL WORK EQUIPMENT AND MATERIALS ARE NEW UNLESS OTHERWISE NOTED AS EXISTING.
7. ALL NEW MATERIALS TO BE INSTALLED SHALL BE ASBESTOS AND LEAD FREE.

ABBREVIATIONS

ARCH	ARCHITECTURAL
BLDG	BUILDING
BOD	BOTTOM OF DUCT
CONT	CONTINUATION
CMH	CUBIC METER PER HOUR
CW	COLD WATER
D	DEPTH/DRAIN
DWG	DRAWING
EF	EXHAUST FAN
ES/EWS	EMERGENCY SHOWER/EYEWASH STATION
ESP	EXTERNAL STATIC PRESSURE
EXST	EXISTING
EWH	ELECTRIC WATER HEATER
GALV	GALVANIZED
H	HEIGHT
HZ	HERTZ
kW	KILOWATT
LPM	LITERS PER MINUTE
MAX	MAXIMUM
MIN	MINIMUM
MM	MILILIMETER
MTD	MOUNTED
Pa	PASCAL
PH	PHASE
QTY	QUANTITY
SST	STAINLESS STEEL
TEMP	TEMPERATURE
TW	TEMPERED WATER
TWR	TEMPERED WATER RETURN
TYP	TYPICAL
UH	UNIT HEATER
V	VOLT
W	WATT/WIDTH

LEGEND

——— – ———	COLD WATER LINE
——— – – ———	TEMPERED WATER LINE
——— – – ———	TEMPERED WATER RETURN LINE

US Army Corps of Engineers®

MARK	DESCRIPTION	DATE

ISSUE DATE: FEBRUARY 2022
SOLICITATION NO.: -
CONTRACT NO.: W912HV-17-D007
DRAWING CODE: -
DESIGNED BY: E.HONDA
DRAWN BY: D.OWENS
CHECKED BY: T.HATTORI
SUBMITTED BY: E.HONDA
SIZE: ISO A1
FILE NAME: DESC20UX_MH-100 Schedule

U.S. ARMY CORPS OF ENGINEERS
JAPAN DISTRICT
APO AP 96343-5010

HDR - WTNA JV
1001 BISHOP STREET
SUITE 400
HONOLULU, HAWAII 96813

MISAWA AIR BASE, JAPAN
DESC 20UX INSTALL ADDITIVE INJECTION SYSTEM

EQUIPMENT SCHEDULE

SHEET ID
MH-100

FILE: DESC20UX_MH-100 Schedule.dwg
DATE: 2/21/2022 4:21 PM OPER: SCALE:

IF SHEET IS LESS THAN 594 X 841 MM
REDUCED PRINT = USE GRAPHIC SCALES

RTA SUBMITTAL

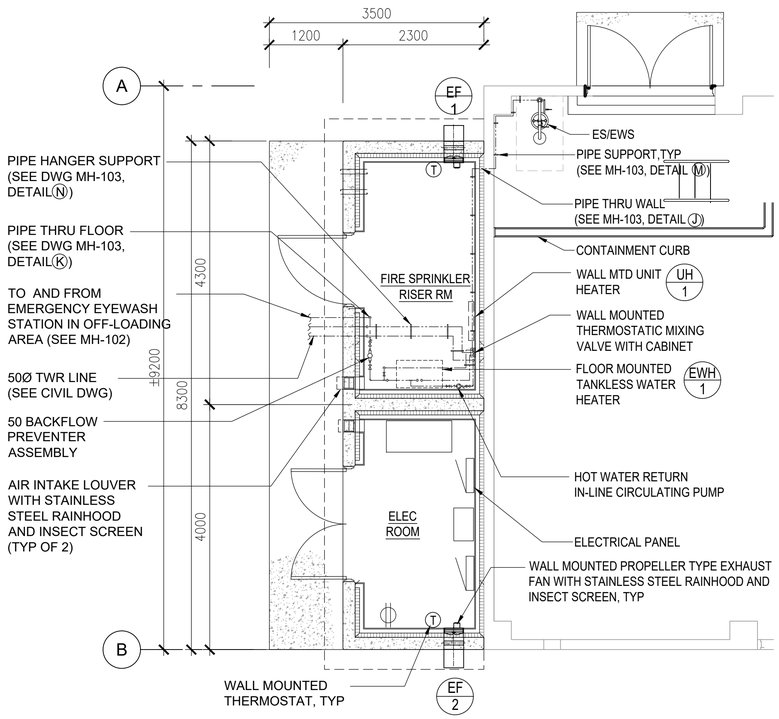

1 PLAN - HOT AND COLD WATER PIPING
SCALE: 1:40

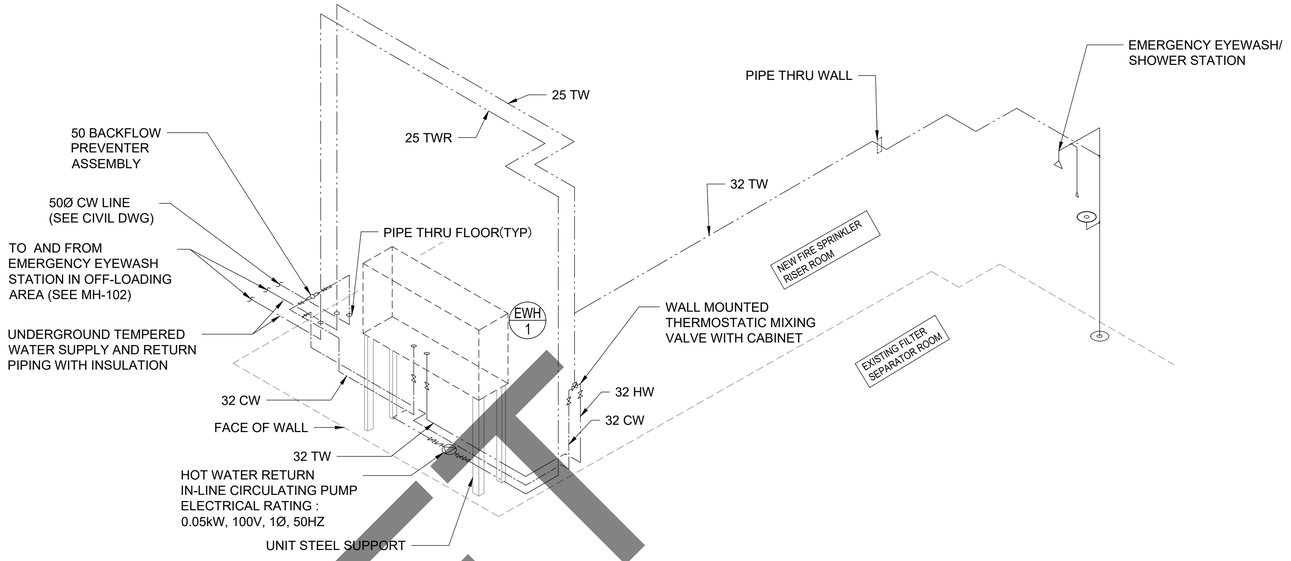

ISOMETRIC - HOT AND COLD WATER PIPING
NOT TO SCALE

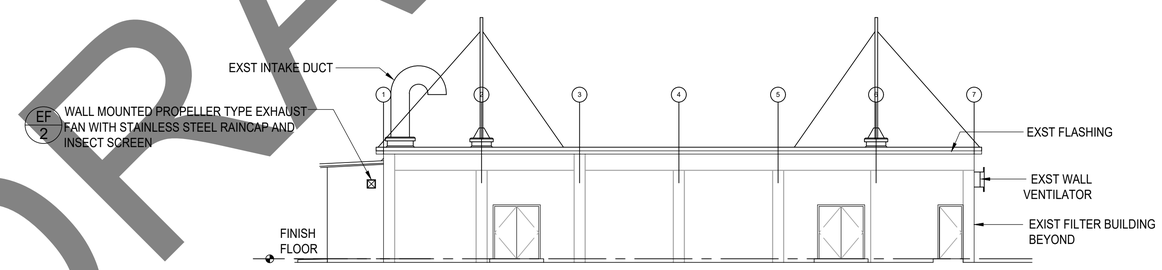

2 ELEVATION -1
SCALE: 1:100

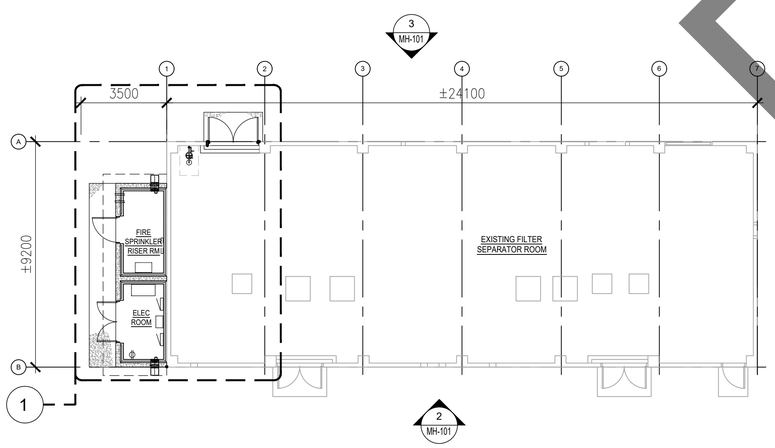

KEY PLAN
SCALE: 1:100

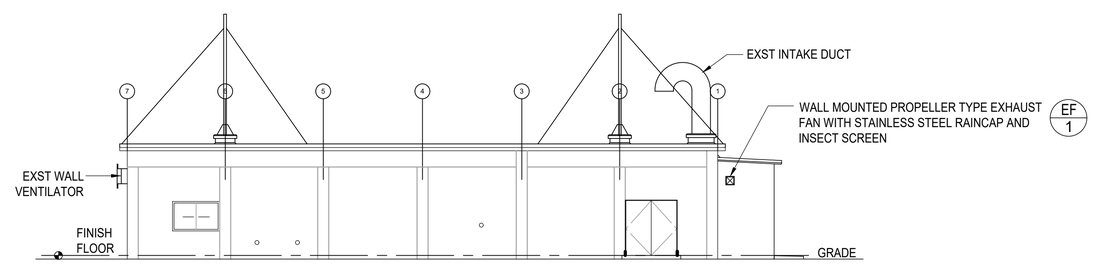

3 ELEVATION - 2
SCALE: 1:100

DRAFT

US Army Corps of Engineers®

MARK	DESCRIPTION	DATE

DESIGNED BY: E.HONDA
DRAWN BY: E.COWARD
CHECKED BY: T.HATTORI
SUBMITTED BY: E.HONDA
SIZE: ISO A1
ISSUE DATE: FEBRUARY 2022
SOLICITATION NO.:
CONTRACT NO.: W912HV-17-D007
DRAWING CODE: -
FILE NAME: DESC20UX_MH-101 Floor Plan

U.S. ARMY CORPS OF ENGINEERS
JAPAN DISTRICT
APO AP 96343-5010

HDR - WTNA JV
1001 BISHOP STREET
SUITE 400
HONOLULU, HAWAII 96813

MISAWA AIR BASE, JAPAN
DESC 20UX INSTALL ADDITIVE INJECTION SYSTEM

PLAN, ELEVATIONS AND ISOMETRIC DRAWING

SHEET ID
MH-101

FILE: DESC20UX_MH-101 Floor Plan.dwg
DATE: 2/21/2022 4:26 PM OPER: SCALE:

IF SHEET IS LESS THAN 594 X 841 MM
REDUCED PRINT = USE GRAPHIC SCALES

RTA SUBMITTAL

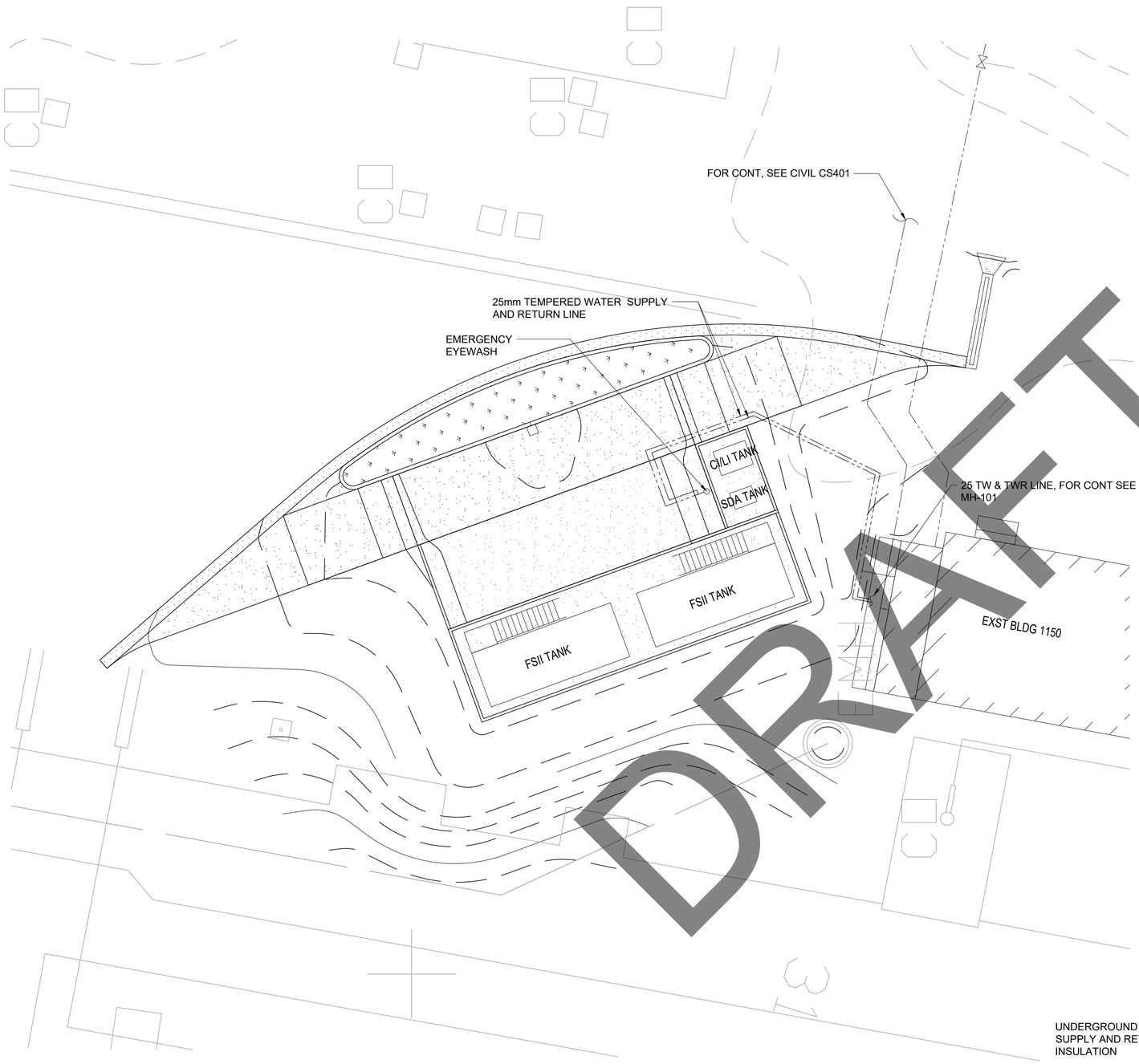

OFF LOADING LOAD AREA EMERGENCY EYEWASH

NOT TO SCALE

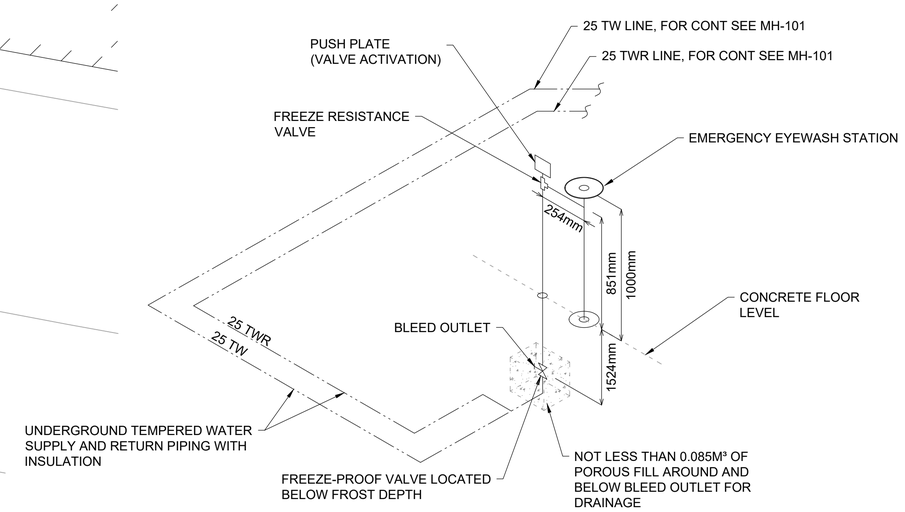

ISOMETRIC - EMERGENCY EYEWASH STATION

NOT TO SCALE

US Army Corps of Engineers®

MARK	DESCRIPTION	DATE

DESIGNED BY: E.HONDA
DRAWN BY: E.FOWLING
CHECKED BY: T.HATTORI
SUBMITTED BY: E.HONDA
SIZE: ISO A1
ISSUE DATE: FEBRUARY 2022
SOLICITATION NO.:
CONTRACT NO.: W912HV-17-D007
DRAWING CODE: -
FILE NAME: DESC20UX_MH-101 Floor Plan

U.S. ARMY CORPS OF ENGINEERS
JAPAN DISTRICT
APO AP 96343-5010

HDR - WTNA JV
1001 BISHOP STREET
SUITE 400
HONOLULU, HAWAII 96813

MISAWA AIR BASE, JAPAN
DESC 20UX INSTALL ADDITIVE INJECTION SYSTEM

OFF LOADING AREA
ISOMETRIC - EMERGENCY EYEWASH STATION

SHEET ID

MH-102

FILE: DESC20UX_MH-102 Site Plan.dwg
DATE: 2/21/2022 4:24 PM OPER: SCALE:

IF SHEET IS LESS THAN 594 X 841 MM
REDUCED PRINT = USE GRAPHIC SCALES

RTA SUBMITTAL

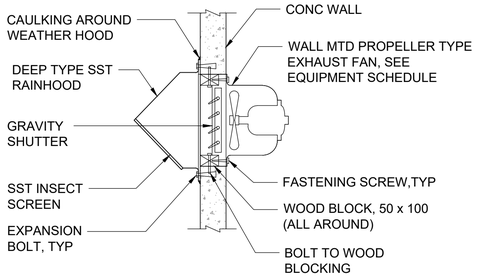

A EXHAUST FAN DETAIL
SCALE: NONE

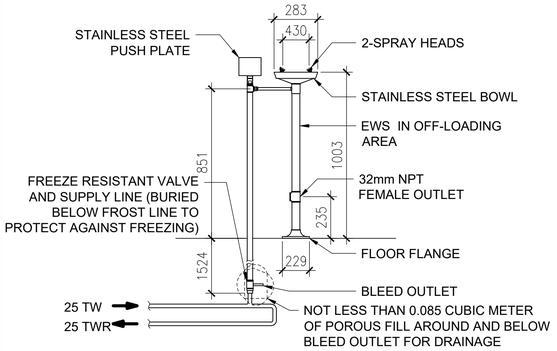

B EMERGENCY EYEWASH DETAIL
SCALE: NONE

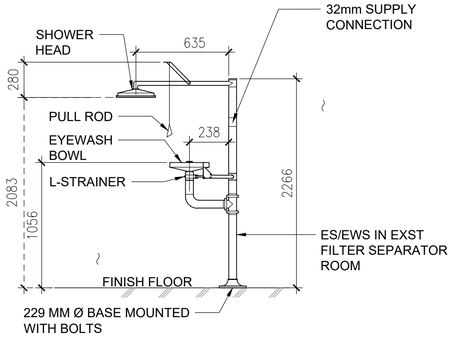

C EMERGENCY SHOWER/ EYEWASH STATION DETAIL
SCALE: NONE

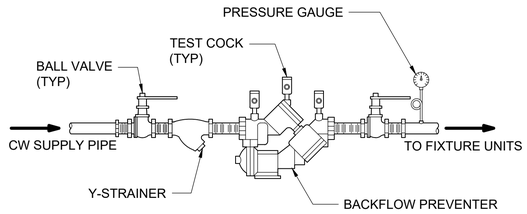

REDUCED PRESSURE PRINCIPLE TYPE

D BACKFLOW PREVENTER DETAIL
SCALE: NONE

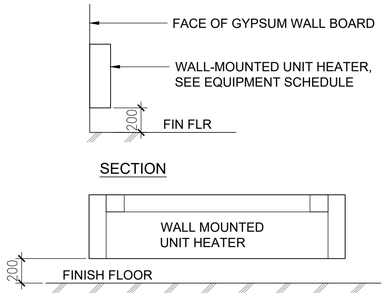

E UNIT HEATER DETAIL
SCALE: NONE

UNIT HEATER
**UH-1 (FOR FIRE SPRINKLER RISER ROOM)

SEQUENCE OF OPERATION:

THE UNIT HEATER SHALL START/STOP AND SHALL BE CONTROLLED BY INTEGRAL THERMOSTAT CONTROLLER IN THE UNIT TO MAINTAIN THE DESIRED ROOM TEMPERATURE SETTING AT 4.4 deg C (40 deg F).

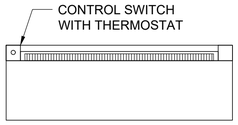

F UH-I CONTROL DIAGRAM
SCALE: NONE

EXHAUST FAN
**EF-1 (FOR FIRE SPRINKLER RISER ROOM)

SEQUENCE OF OPERATION:

THE EXHAUST FAN (EF-1) SHALL START/STOP AND SHALL BE CONTROLLED BY WALL MOUNTED THERMOSTAT CONTROLLER TO MAINTAIN THE DESIRED ROOM TEMPERATURE SETTING AT 26.7 deg C.

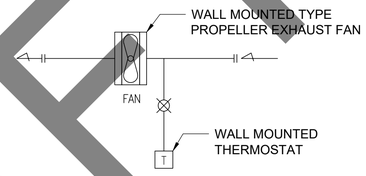

G EF-1 CONTROL DIAGRAM
SCALE: NONE

EXHAUST FAN
**EF-2 (FOR ELECTRICAL ROOM)

SEQUENCE OF OPERATION:

THE EXHAUST FAN (EF-2) SHALL START/STOP AND SHALL BE CONTROLLED BY WALL MOUNTED THERMOSTAT CONTROLLER TO MAINTAIN THE DESIRED ROOM TEMPERATURE SETTING AT 26.7 deg C

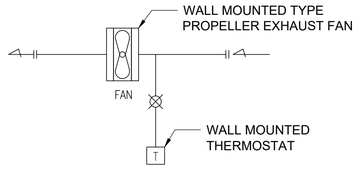

H EF-2 CONTROL DIAGRAM
SCALE: NONE

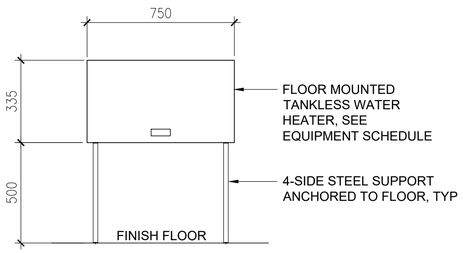

I FLOOR MOUNTED TANKLESS UNIT HEATER DETAIL
SCALE: NONE

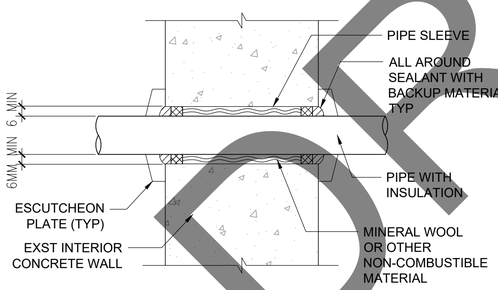

J PIPE PENETRATION DETAIL (INTERIOR)
SCALE: NONE

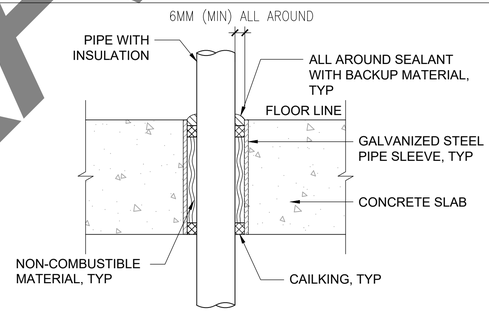

K PIPE PENETRATION DETAIL (FLOOR)
SCALE: NONE

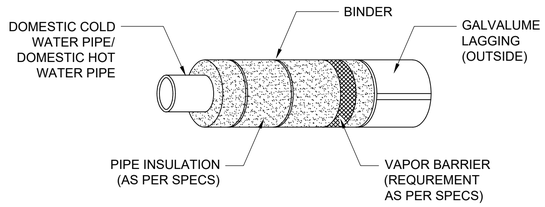

L PIPE INSULATION DETAIL
SCALE: NONE

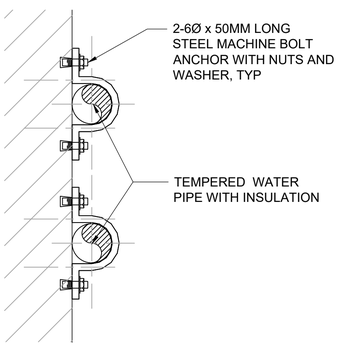

M PIPE WALL SUPPORT DETAIL
SCALE: NONE

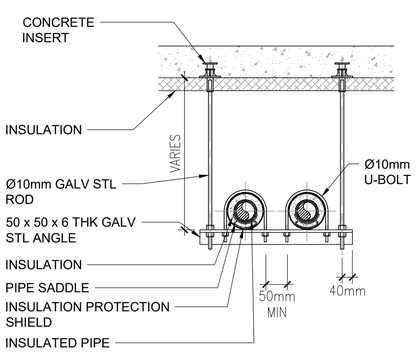

N PIPE HANGER SUPPORT DETAIL
SCALE: NONE

DRAFT

US Army Corps of Engineers®

MARK	DESCRIPTION	DATE

ISSUE DATE: FEBRUARY 2022
SOLICITATION NO.:
CONTRACT NO.: W912HV-17-D007
DRAWING CODE: -
DESIGNED BY: E.HONDA
DRAWN BY: E.COMMO
CHECKED BY: T.HATTORI
SUBMITTED BY: E.HONDA
FILE NAME: DESC20UX_MH-102 Misc Details
SIZE: ISO A1

U.S. ARMY CORPS OF ENGINEERS
JAPAN DISTRICT
APO AP 96343-5010

HDR - WTNA JV
1001 BISHOP STREET
SUITE 400
HONOLULU, HAWAII 96813

MISAWA AIR BASE, JAPAN
DESC 20UX INSTALL ADDITIVE INJECTION SYSTEM

MISCELLANEOUS DETAILS

SHEET ID
MH-103

FILE: DESC20UX_MH-103 Misc Details.dwg
DATE: 2/21/2022 4:25 PM OPER: SCALE:

IF SHEET IS LESS THAN 594 X 841 MM
REDUCED PRINT = USE GRAPHIC SCALES

RTA SUBMITTAL

FIRE PROTECTION SYMBOLS AND ABBREVIATIONS

SYMBOL EXISTING	SYMBOL NEW	DESCRIPTION
	F	DRY PIPE FIRE SPRINKLER PIPING
	D	DRAIN PIPE
	D	DRY PIPE FIRE SPRINKLER RISER
		PIPE / CONDUIT UP, AS NOTED
		PIPE / CONDUIT DOWN, AS NOTED
		PIPE / CONDUIT BREAK FOR CONTINUATION OR CLARITY
		PIPE CAPPED FOR FUTURE USE
		CHECK VALVE
		OS&Y VALVE
		ELECTRIC BELL
		FIRE DEPARTMENT CONNECTION
		TEST HEADER
		UPRIGHT SPRINKLER
	PS	ALARM PRESSURE SWITCH
	LA	LOW AIR PRESSURE SWITCH
	VS	TAMPER SWITCH
F	F	MANUAL FIRE ALARM STATION, MOUNTED 1,220 MM AFF TO TOP
		FIRE ALARM HORN
		HORN/STROBE
	FEP	POWER EXTENDER PANEL
	S P	PHOTOELECTRIC SMOKE DETECTOR
	AIM	ADDRESSABLE INPUT MODULE
	AOM	ADDRESSABLE OUTPUT MODULE
	EP	EXPLOSION PROOF
	WP	WEATHER PROOF
		AUXILLARY DRAIN

FIRE PROTECTION SYSTEM PAINTING:

1. PROVIDE PAINTING IN ACCORDANCE WITH UFGS 09 90 00.

AUTOMATIC SPRINKLER SYSTEM NOTES

1. THE SPRINKLER SYSTEM DESIGN AND INSTALLATION SHALL BE IN ACCORDANCE WITH NFPA 13-2019, UFC 3-600-01, CHANGE 4, 7 FEB 2020 AND SPECIFICATION SECTION 21 13 16 AND 28 31 70. THE CONTRACTOR SHALL VERIFY THE LOCATION OF ALL SPRINKLER SYSTEM COMPONENTS AND COORDINATE WITH THE VARIOUS TRADES, I.E. FIRE ALARM, ELECTRICAL, ETC.

2. ALL DEVICES AND EQUIPMENT SHALL BE UL LISTED OR FM APPROVED.

3. AUTOMATIC DRY PIPE SPRINKLER PROTECTION SHALL BE PROVIDED FOR THE ENTIRE BUILDING.

4. WATER SUPPLY INFORMATION: THE WATER SUPPLY FOR THE FACILITY WILL BE SUPPLIED BY BASE WATER SUPPLY.

   MISAWA AB, JAPAN, WATER SUPPLY:

PRESSURE HYDRANT:	344.7 kPa // F-21
FLOW HYDRANT:	165.5 kPa // F-10
TEST DATE:	OCT 14, 2020
STATIC PRESSURE:	468 KPA (68 PSI)
RESIDUAL FLOW @ 138 KPA (20 PSI):	7,429 LPM (1,963 GPM)

5. THE SPRINKLER SYSTEM SHALL BE HYDRAULICALLY DESIGNED USING AREA/DENSITY METHOD IN ACCORDANCE WITH NFPA 13. DESIGN CRITERIA SHALL BE APPLIED AS INDICATED ON THE DRAWINGS.

   ELECTRICAL AND FIRE SPRINKLER RISER ROOM (DRY-PIPE SYSTEM):

HAZARD CLASSIFICATION:	ORDINARY HAZARD
DESIGN DENSITY:	8.0 LPM/SM
K-FACTOR:	115
DESIGN AREA:	12.89 SM (FOR DRY PIPE SYSTEM)
OUTSIDE HOSE STREAM:	950 LPM
DURATION:	60 MINUTES

   FUEL INJECTOR SYSTEM ROOM (DRY-PIPE SYSTEM):

HAZARD CLASSIFICATION:	EXTRA HAZARD
DESIGN DENSITY:	12.0 LPM/SM
K-FACTOR:	160
DESIGN AREA:	209.3 SM (FOR DRY PIPE SYSTEM)
OUTSIDE HOSE STREAM:	1900 LPM
DURATION:	90 MINUTES

6. FIRE SPRINKLER DESIGN MUST PROVIDE A 10% SAFETY FACTOR APPLIED PARALLEL TO THE ORIGINAL WATER SUPPLY CURVE BASED ON THE STATIC PRESSURE.

7. IN ACCORDANCE WITH UFC 3-600-01, 9-7.10.3 SEISMIC RESTRAINT OF THE SPRINKLER SYSTEM IS REQUIRED FOR SEISMIC DESIGN CATEGORIES OTHER THAN A AND B. THE SEISMIC DESIGN CATEGORY FOR THIS SITE IS C.

8. SPRINKLER PIPING SHALL COMPLY WITH NFPA 13, EXCEPT THAT COPPER AND PLASTIC PIPE SHALL NOT BE PERMITTED. ALL PIPING IN FINISHED AREAS SHALL BE CONCEALED.

9. THE PIPE ROUTING AND SPRINKLER LOCATIONS ARE CONCEPTUAL. THE CONTRACTOR SHALL INSTALL THE SYSTEM IN ACCORDANCE WITH THE APPLICABLE CODES, MANUFACTURER'S RECOMMENDATIONS, EQUIPMENT LISTINGS AND SHALL BE DESIGNED TO AVOID OBSTRUCTIONS AS REQUIRED BY NFPA 13.

10. PROVIDE TAMPER SWITCHES ON CONTROL VALVES INSTALLED ON THE FIRE SPRINKLER RISER AND LOCK AND CHAIN FOR THE CONTROL VALVE ON THE TEST HEADER.

11. PROVIDE 1.2 MPA PRESSURE RELIEF VALVE FOR EACH SPRINKLER RISER AND FLOOR CONTROL VALVES. RELIEF VALVES MUST BE FACTORY SET TO 1.2 MPA AND MUST OPERATE TO THE OPEN POSITION BETWEEN 90% AND 105% OF THE SET PRESSURE.

12. PROVIDE WIRE HEAD GUARDS ON FIRE SPRINKLERS LOCATED IN MECHANICAL AND ELECTRICAL ROOMS AND AS REQUIRED BY NFPA 13.

13. PROVIDE A 55.2 KPA (8 PSI) LOSS THROUGH THE DOUBLE CHECK BACKFLOW PREVENTER.

FIRE ALARM NOTES:

1. THE FIRE ALARM SHALL BE DESIGNED AND INSTALLED IN ACCORDANCE WITH NFPA 72-2019, UFC 3-600-01, CHANGE 4, 7 FEB 2020 AND SPECIFICATION SECTION 28 31 70.

2. ALL DEVICES AND EQUIPMENT SHALL BE U.L. LISTED OR FM APPROVED.

3. DEVICE LOCATIONS AND CONDUIT ROUTING ARE CONCEPTUAL. DEVICES ARE SHOWN IN SUGGESTED LOCATIONS. FINAL QUANTITY AND LAYOUT SHALL BE IN ACCORDANCE WITH APPLICABLE CODES, MANUFACTURER'S RECOMMENDATIONS, AND EQUIPMENT LISTINGS. COORDINATE LOCATIONS WITH LIGHTING SYSTEM.

4. ALL FIRE ALARM CONDUIT SHALL BE 19 MM MINIMUM. ALL CONDUIT IN FINISHED AREAS SHALL BE CONCEALED.

5. SYNCHRONIZE ALL VISUAL NOTIFICATION APPLIANCES. SYNCHRONIZE ALL AUDIBLE NOTIFICATION APPLIANCES.

6. THE FIRE ALARM SIGNAL SHALL BE A TEMPORAL THREE PATTERN TONE.

7. SIGNALING LINE CIRCUITS SHALL BE CLASS B, INITIATING DEVICE CIRCUITS SHALL BE CLASS B. NOTIFICATION APPLIANCE CIRCUITS SHALL BE CLASS B.

8. FOLLOW CLASS I, DIV I ELECTRICAL INSTALLATION IN ACCORDANCE WITH NFPA 70. SEE ELECTRICAL DRAWING E-003 FOR HAZARDOUS LOCATIONS.

DRAFT

US Army Corps of Engineers®

MARK	DESCRIPTION	DATE

DESIGNED BY: RTB
DRAWN BY: TSW
CHECKED BY: JH
SUBMITTED BY:
SIZE: ISO A1
ISSUE DATE: FEBRUARY 2022
SOLICITATION NO.: -
CONTRACT NO.: W912HV-17-D-0007
DRAWING CODE: -
FILE NAME: DESSC20UX-F-001.dwg

U.S. ARMY CORPS OF ENGINEERS
JAPAN DISTRICT
APO AP 96328-5010

HDR - WTNA JV
1001 BISHOP STREET
SUITE 400
HONOLULU, HAWAII 96813

MISAWA AIR BASE, JAPAN
DESC 20UX INSTALL ADDITIVE INJECTION SYSTEM

FIRE PROTECTION NOTES, SYMBOLS AND ABBREVIATIONS

SHEET ID
F-001

BUILDING AND LIFE SAFETY CODE SUMMARY:

BUILDING CODE:

UNIFIED FACILITIES CRITERIA (UFC):

FC 1-300-09N	NAVY AND MARINE CORPS DESIGN PROCEDURES WITH CHANGE 4, 14 JUNE 2018
UFC 1-200-01	DOD BUILDING CODE (GENERAL BUILDING REQUIREMENTS), 20 JUNE 16 WITH CHANGE 1, 01 FEB 2018
UFC 3-460-01	DESIGN: PETROLEUM FUEL FACILITIES, 16 AUG 2010 WITH CHANGE 2, 17 JUN 2015
UFC 3-600-01	FIRE PROTECTION ENGINEERING FOR FACILITIES, 8 AUG 2016 WITH CHANGE 4, 7 FEB 2020
UFC 4-010-01	DOD MINIMUM ANTITERRORISM STANDARDS FOR BUILDINGS, 9 FEB 2012 WITH CHANGE 1, 1 OCT 2013

INTERNATIONAL CODES, INTERNATIONAL CODE COUNCIL (ICC):

IBC	INTERNATIONAL BUILDING CODE, 2018

NATIONAL FIRE CODES, NATIONAL FIRE PROTECTION ASSOCIATION (NFPA) STANDARDS:

NFPA 1	FIRE CODE, 2018
NFPA 13	STANDARD FOR THE INSTALLATION OF SPRINKLER SYSTEMS, 2019
NFPA 30	FLAMMABLE AND COMBUSTIBLE LIQUIDS CODE, 2018
NFPA 70	NATIONAL ELECTRICAL CODE, 2020
NFPA 72	NATIONAL FIRE ALARM AND SIGNALING CODE, 2019
NFPA 101	LIFE SAFETY CODE, 2018

IBC OCCUPANCY	NFPA OCCUPANCY
H-2	SPECIAL PURPOSE INDUSTRIAL OCCUPANCY WITH HIGH HAZARD CONTENT (CHAPTER 40)
S-2	STORAGE OCCUPANCY (CHAPTER 42)

THE FIRE SPRINKLER RISER AND ELECTRICAL ROOMS WILL BE CONSIDERED LOW-HAZARD ACCESSORY STORAGE OCCUPANCIES PER IBC, SECTION 311.3.

CONSTRUCTION TYPE PROVIDED: TYPE II-B

BUILDING HEIGHT (TABLE 504):

OCCUPANCY	ALLOWABLE	PROVIDED
HIGH-HAZARD (H-2)	16.76 M (1-STORY)	5 M (1-STORY)

ALLOWABLE AREA (TABLE 506.2):
THIS ANALYSIS IS BASED ON THE IBC RULES FOR NON-SEPARATED OCCUPANCIES.

OCCUPANCY	BASIC ALLOWABLE AREA	ACTUAL AREA
HIGH-HAZARD (H-2)	650 SM	223.79 SM

BUILDING SEPARATION AND EXPOSURE PROTECTION (TABLE 601, 704.8):
BUILDING EXPOSURES

LOCATION AND EXPOSURE	FIRE SEPARATION PROVIDED	REQUIRED FIRE RATING
NORTH: CLASS II FUELS TANK	5.1 M	0 HR
EAST: OPEN	> 9.14 M	0 HR
SOUTH: OPEN	> 9.14 M	0 HR
WEST: OPEN	> 9.14 M	0 HR

FIRE RESISTANCE REQUIREMENTS (TABLE 601):

BUILDING ELEMENT	MATERIAL RATING	REQUIRED RATING	PROVIDED	SECTION
PRIMARY STRUCTURAL FRAME	NON-COMBUSTIBLE	0 HR	0 HR	TABLE 601
BEARING WALLS - EXTERIOR	NON-COMBUSTIBLE	0 HR	0 HR	TABLE 601
BEARING WALLS - INTERIOR	NON-COMBUSTIBLE	0 HR	0 HR	TABLE 601
NONBEARING WALLS - EXTERIOR	NON-COMBUSTIBLE	0 HR	0 HR	TABLE 601
NONBEARING WALLS - INTERIOR	NON-COMBUSTIBLE	0 HR	0 HR	TABLE 601
FLOOR CONSTRUCTION	NON-COMBUSTIBLE	0 HR	0 HR	TABLE 601
ROOF CONSTRUCTION	NON-COMBUSTIBLE	0 HR	0 HR	TABLE 601

LIFE SAFETY CODE:

OCCUPANT LOAD:

OCCUPANCY USE	AREA	OCCUPANT LOAD FACTOR	OCCUPANT LOAD
INDUSTRIAL	209.3 SM	NA	5
STORAGE	14.49 SM	46.5	2

CAPACITY OF MOE:

FIVE DOUBLE DOORS: (1700 MM / 10 MM) * 5 = 850 PERSONS
ONE SINGLE DOOR: (850 MM / 10 MM) * 1 = 85 PERSONS

MINIMUM NUMBER OF EXITS REQUIRED: 2
PROVIDED NUMBER OF EXITS: 3

PER SECTION 7.5.1.3.3, THE MINIMUM SEPARATION DISTANCE BETWEEN 2 EXITS MUST BE AT LEAST ONE-THIRD THE LENGTH OF THE MAXIMUM OVERALL DIAGONAL DIMENSION OF THE BUILDING. IT IS NOTED THAT THE DISTANCE BETWEEN THE SINGLE AND DOUBLE DOOR OF THE EXISTING FILTER ROOM DOES NOT MEET THIS REQUIREMENT. HOWEVER, THE FILTER ROOM STILL MEETS THE MINIMUM 2 EXIT REQUIREMENT AND HAS A TOTAL OF 3 PROVIDED EXITS.

COMMON PATH OF TRAVEL:	MAXIMUM ALLOWED	PROVIDED
	30 M	4 M

TRAVEL DISTANCE:	MAXIMUM ALLOWED	PROVIDED
	122 M	22 M

EMERGENCY LIGHTING: REQUIRED AND PROVIDED
MARKING OF MEANS OF EGRESS: NOT REQUIRED
PROTECTION OF OPENINGS: FACILITY IS ONE STORY AND DOES NOT HAVE VERTICAL OPENINGS
PROTECTION FROM HAZARDS: CLASS 1, DIVISION 1, SEE ELECTRICAL DRAWINGS FOR HAZARDOUS LOCATIONS
FIRE EXTINGUISHING SYSTEMS: DRY PIPE SPRINKLER SYSTEM REQUIRED AND PROVIDED
FIRE ALARM AND MASS NOTIFICATION SYSTEMS (FA AND MNS): FA SYSTEM PROVIDED, MNS NOT REQUIRED

EGRESS LEGEND

SYMBOL	DESCRIPTION
	EGRESS PATH
	COMMON PATH OF TRAVEL
XXX/XXX	OCCUPANT LOAD/EGRESS CAPACITY
XXX/XXX	COMMON PATH OF TRAVEL (METER)/ TRAVEL DISTANCE (METER)
	EXIT

OCCUPANCY LEGEND

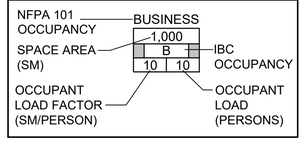

NOTE: WHEN OCCUPANT LOAD FACTOR IS "NA", THE OCCUPANT LOAD REPRESENTS THE MAXIMUM PROBABLE NUMBER OF OCCUPANTS PRESENT AT ANY TIME PER NFPA TABLE 7.3.1.2.

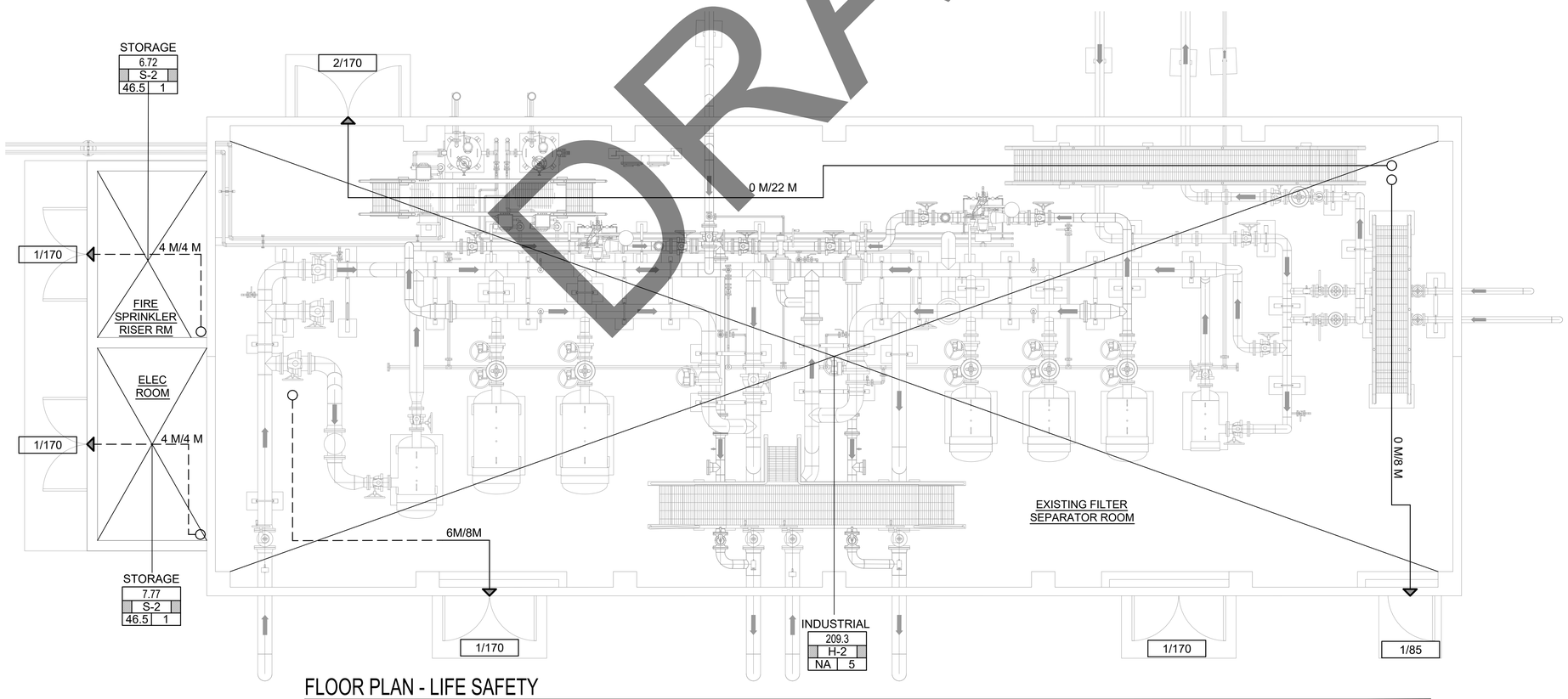

FLOOR PLAN - LIFE SAFETY
SCALE: 1:50

DRAFT

US Army Corps of Engineers®

MARK	DESCRIPTION	DATE

DESIGNED BY: RTB
DRAWN BY: TSW
CHECKED BY: JH
SUBMITTED BY:
ISSUE DATE: FEBRUARY 2022
SOLICITATION NO.: -
CONTRACT NO.: W912HV-17-D-0007
DRAWING CODE: -
SIZE: ISO A1
FILE NAME: DESSC20UX-F-101.dwg

U.S. ARMY CORPS OF ENGINEERS
JAPAN DISTRICT
APO AP 96343-5010

HDR - WTNA JV
1001 BISHOP STREET
SUITE 400
HONOLULU, HAWAII 96813

MISAWA AIR BASE, JAPAN
DESC 20UX INSTALL ADDITIVE INJECTION SYSTEM

BUILDING AND LIFE SAFETY CODE SUMMARY AND LIFE SAFETY PLAN

SHEET ID
F-101

FILE: DESSC20UX-F-101.dwg
DATE: 12/15/2021 8:03 AM
OPER:
SCALE:

IF SHEET IS LESS THAN 594 X 841 MM
REDUCED PRINT = USE GRAPHIC SCALES

RTA SUBMITTAL

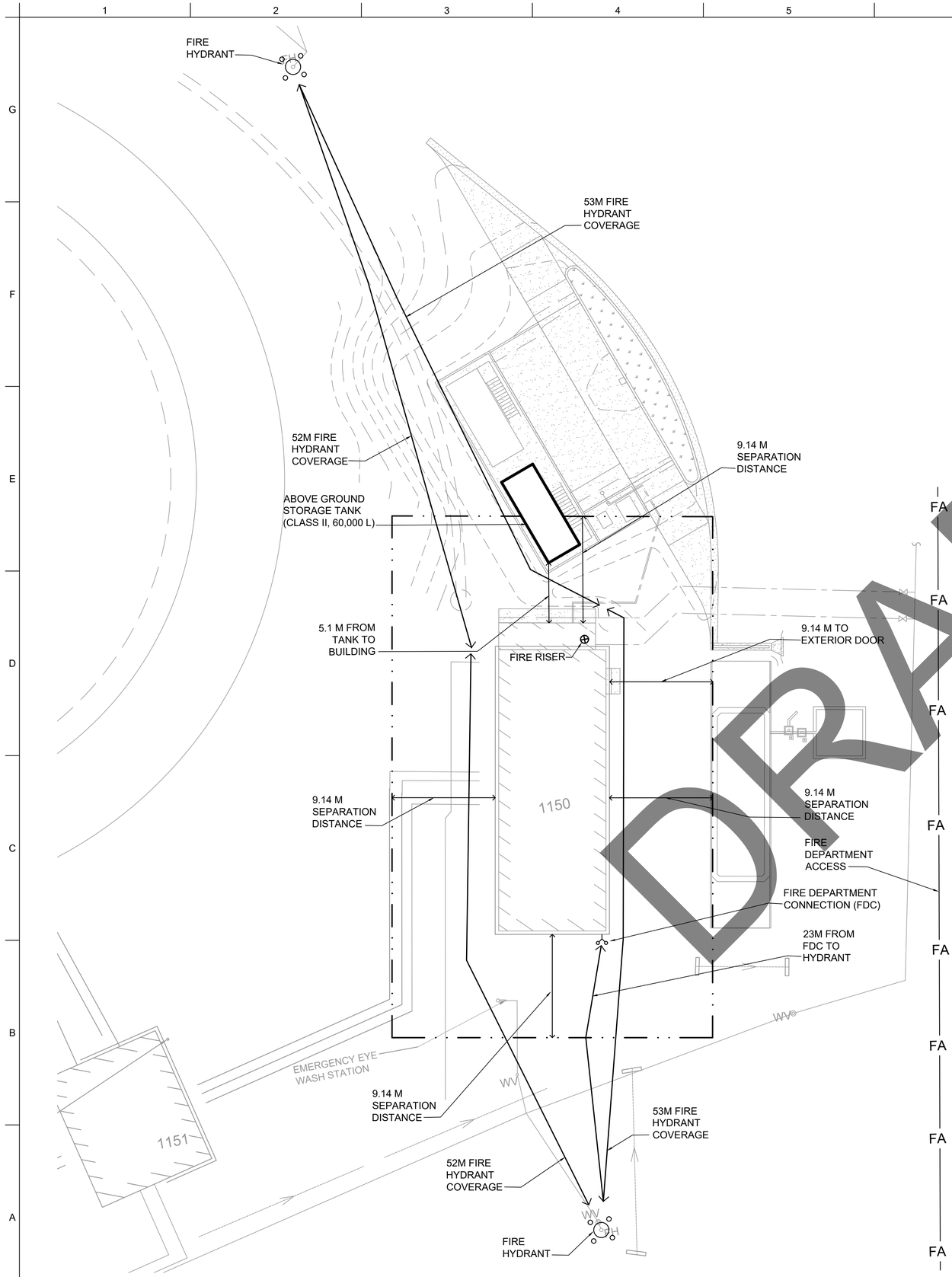

SITE PLAN LEGEND

SYMBOL	DESCRIPTION
— · · —	ASSUMED PROPERTY LINE
— FA —	FIRE DEPARTMENT ACCESS
———	FIRE HYDRANT COVERAGE
	FIRE HYDRANT
	FIRE DEPARTMENT CONNECTION

CODE COMPLIANCE SITE PLAN

SCALE: 1:200

0 5 10m

N

US Army Corps of Engineers®

MARK	DESCRIPTION	DATE

DESIGNED BY: RTB
DRAWN BY: TSW
CHECKED BY: JH
SUBMITTED BY:
SIZE: ISO A1
ISSUE DATE: FEBRUARY 2022
SOLICITATION NO.: -
CONTRACT NO.: W912HV-17-D-0007
DRAWING CODE: -
FILE NAME: DESSC20UX-F-102.dwg

U.S. ARMY CORPS OF ENGINEERS
JAPAN DISTRICT
APO AP 96343-5310

HDR - WTNA JV
1001 BISHOP STREET
SUITE 400
HONOLULU, HAWAII 96813

MISAWA AIR BASE, JAPAN
DESC 20UX INSTALL ADDITIVE INJECTION SYSTEM

CODE COMPLIANCE SITE PLAN

SHEET ID

F-102

FILE: DESSC20UX-F-102.dwg
DATE: 10/22/2021 3:25 PM
OPER:
SCALE:

IF SHEET IS LESS THAN 594 X 841 MM
REDUCED PRINT = USE GRAPHIC SCALES

RTA SUBMITTAL

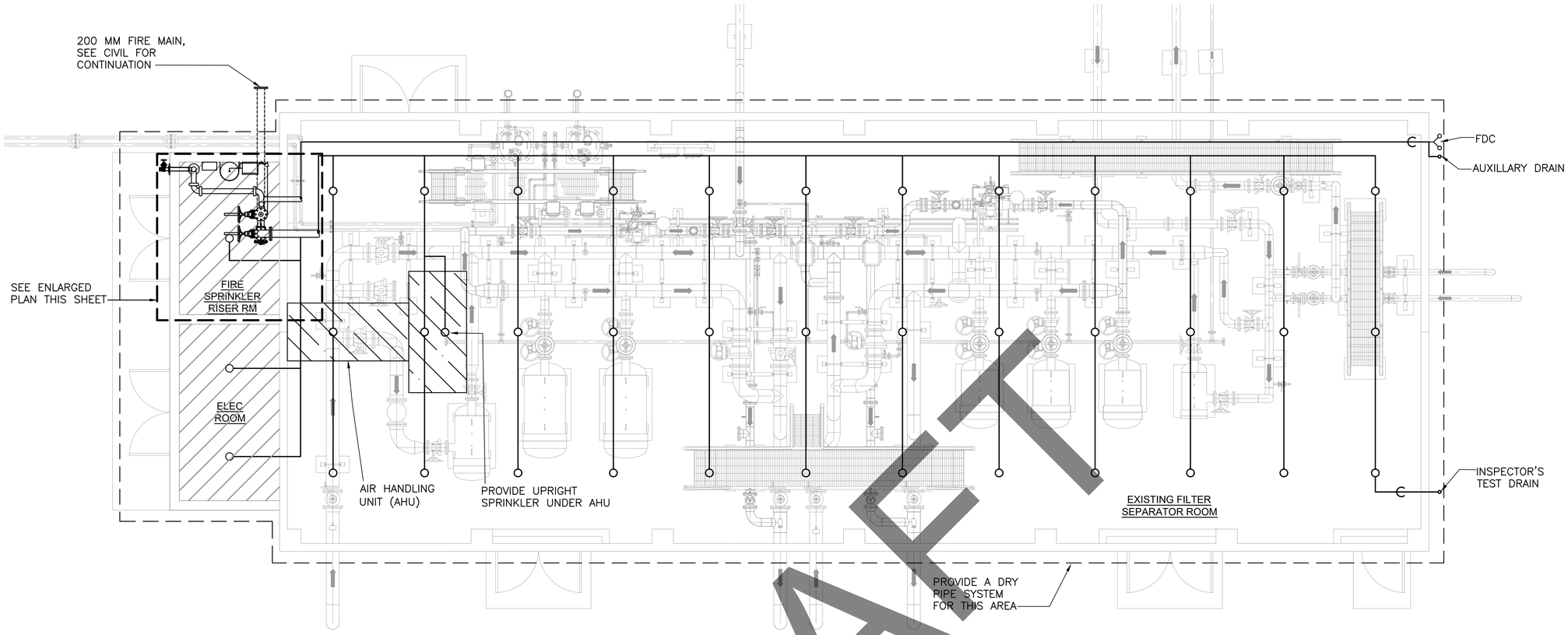

FLOOR PLAN - FIRE SPRINKLER

SCALE: 1:50

0 1 2m

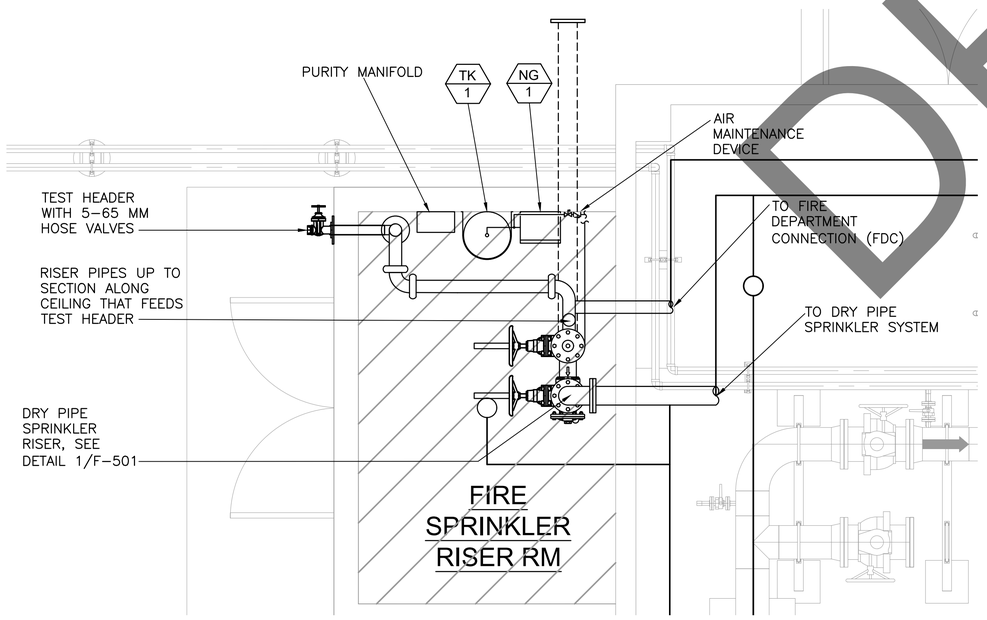

ENLARGED FLOOR PLAN - FIRE SPRINKLER

SCALE: 1:25

0 500 1000mm

NITROGEN GENERATOR SCHEDULE

UNIT NO.	TYPE	REQUIRED VOLUME	PRESSURE	POWER	VOLTS	PHASE	HERTZ	REMARKS
NG 1	NITROGEN GENERATION SYSTEM, SELF CONTAINED WITH DROP-IN OPERABILITY	1892.71 LITERS (500 GALLONS)	276 KPA	15 AMPS	110	1	60	SKID MOUNTED. PROVIDE WITH PURITY MONITOR MANIFOLD. ABLE TO FILL UP TO 2403 LITERS (635 GALLONS) WITHIN 30 MINUTES
TK 1	NITROGEN TANK	105.99 LITERS (28 GALLONS)						PROVIDE WITH TANK MANIFOLD WITH NOZZLES AND TANK STRAP ASSEMBLY

FIRE SPRINKLER HAZARD GROUP LEGEND	
	EXTRA HAZARD
	ORDINARY HAZARD

DRAFT

US Army Corps of Engineers®

MARK	DESCRIPTION	DATE

DESIGNED BY: RTB
DRAWN BY: TSW
CHECKED BY: JH
SUBMITTED BY:
SIZE: ISO A1
ISSUE DATE: FEBRUARY 2022
SOLICITATION NO.: -
CONTRACT NO.: W912HV-17-D-0007
DRAWING CODE: -
FILE NAME: DESSC20UX-FX101.dwg

U.S. ARMY CORPS OF ENGINEERS
JAPAN DISTRICT
APO AP 96343-5010

HDR - WTNA JV
1001 BISHOP STREET
SUITE 400
HONOLULU, HAWAII 96813

MISAWA AIR BASE, JAPAN
DESC 20UX INSTALL ADDITIVE INJECTION SYSTEM

FLOOR PLAN - FIRE SPRINKLER

SHEET ID
FX101

N

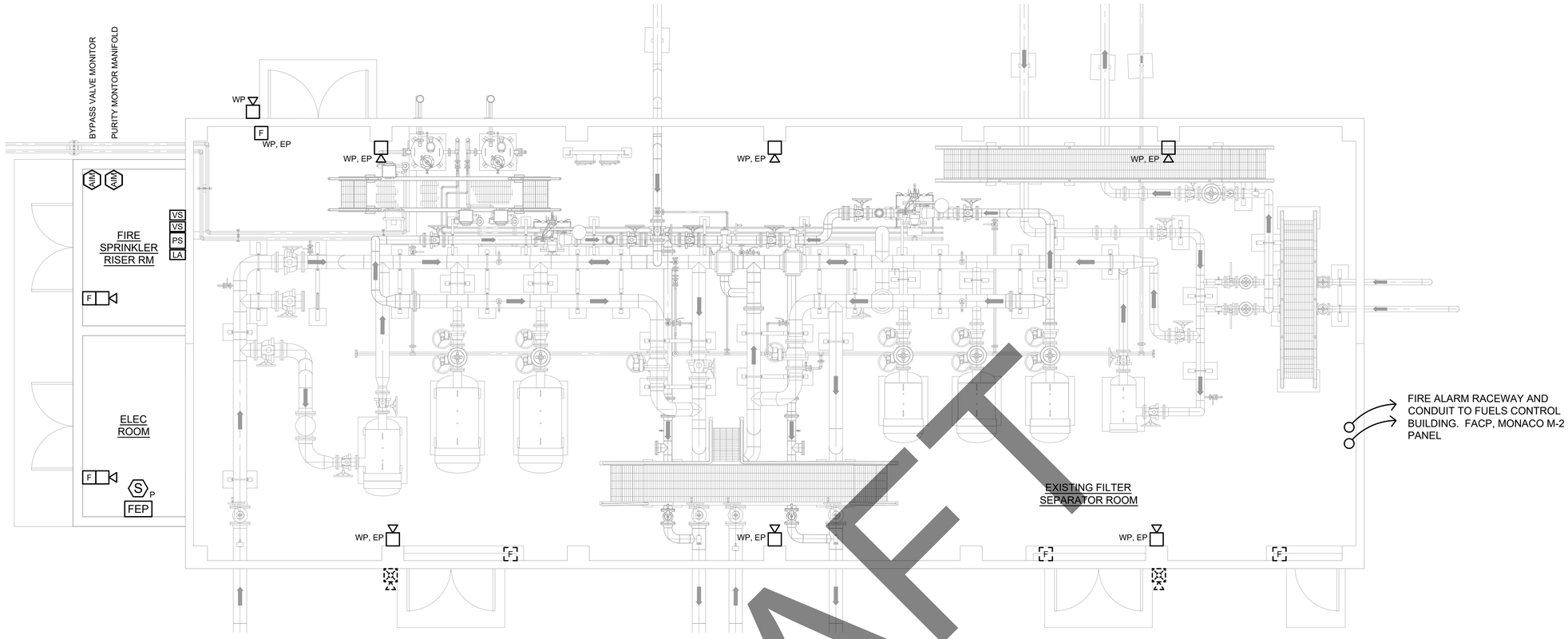

FLOOR PLAN - FIRE ALARM

SCALE: 1:50

0 1 2m

FIRE ALARM SEQUENCE OF OPERATIONS

NOTE:
RE-PROGRAM EXISTING SEQUENCE OF OPERATIONS TO ADD NEW SYSTEM INPUT AND OUTPUT SHOWN

SYSTEM INPUT		SYSTEM OUTPUT 1: ANNUNCIATE ALARM ZONE AT FACP	2: ANNUNCIATE TROUBLE ZONE AT FACP	3: ANNUNCIATE SUPERVISORY ALARM ON FACP	4: ACTIVATE AUDIO ALARMS	5: TRANSMIT SIGNAL VIA THE RADIO FIRE ALARM TRANSMITTER TO FUELS BUILDING	
A	ACTIVATION OF A SPRINKLER PRESSURE SWITCH	X			X	X	A
B	ACTIVATION OF CEILING SMOKE DETECTOR	X			X	X	B
C	ACTIVATION OF LOW AIR PRESSURE SENSOR			X		X	C
D	SIGNAL FROM PURITY MONITOR MANIFOLD INDICATING PURITY BELOW 98%			X			D
E	SIGNAL FROM BYPASS VALVE MONITOR			X			E
F	ACTIVATION OF MANUAL PULL STATION	X	X		X	X	F
		1	2	3	4	5	

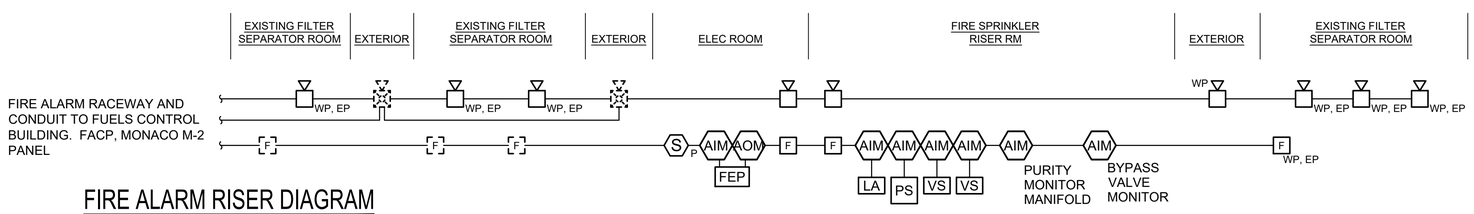

FIRE ALARM RISER DIAGRAM

NOT TO SCALE

DRAFT

US Army Corps of Engineers®

MARK	DESCRIPTION	DATE

DESIGNED BY: RTB
DRAWN BY: TXW
CHECKED BY: JH
SUBMITTED BY:
SIZE: ISO A1
ISSUE DATE: FEBRUARY 2022
SOLICITATION NO.: -
CONTRACT NO.: W912HV-17-D-0007
DRAWING CODE: -
FILE NAME: DESSC20UX-FA101.dwg

U.S. ARMY CORPS OF ENGINEERS
JAPAN DISTRICT
APO AP 96204-5010

HDR - WTNA JV
1001 BISHOP STREET
SUITE 400
HONOLULU, HAWAII 96813

MISAWA AIR BASE, JAPAN
DESC 20UX INSTALL ADDITIVE INJECTION SYSTEM

FLOOR PLAN - FIRE ALARM

SHEET ID
FA101

FILE: DESSC20UX-FA101.dwg
DATE: 10/22/2021 3:26 PM
OPER:
SCALE:

IF SHEET IS LESS THAN 594 X 841 MM
REDUCED PRINT = USE GRAPHIC SCALES

RTA SUBMITTAL

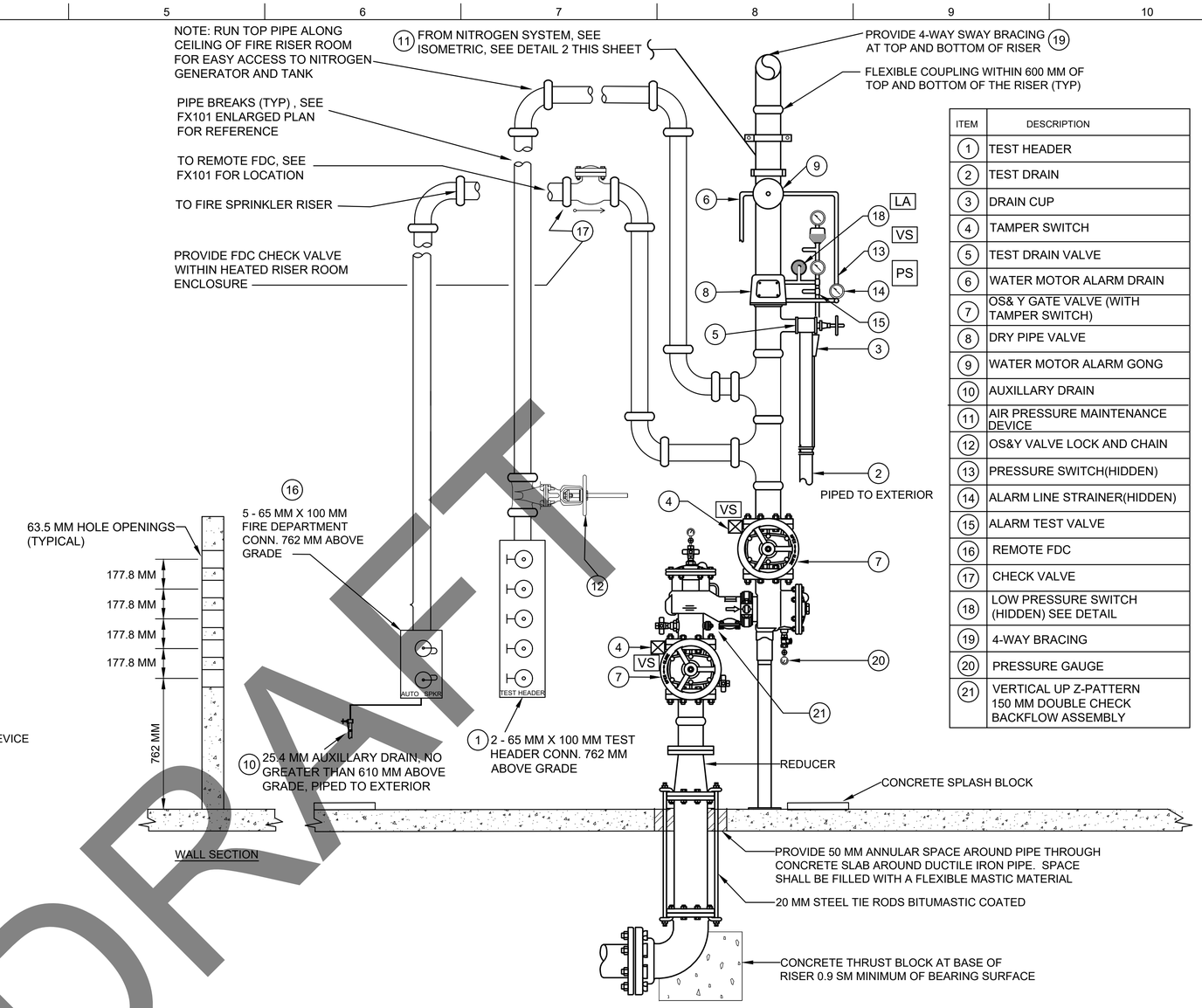

ITEM	DESCRIPTION
1	TEST HEADER
2	TEST DRAIN
3	DRAIN CUP
4	TAMPER SWITCH
5	TEST DRAIN VALVE
6	WATER MOTOR ALARM DRAIN
7	OS& Y GATE VALVE (WITH TAMPER SWITCH)
8	DRY PIPE VALVE
9	WATER MOTOR ALARM GONG
10	AUXILLARY DRAIN
11	AIR PRESSURE MAINTENANCE DEVICE
12	OS&Y VALVE LOCK AND CHAIN
13	PRESSURE SWITCH(HIDDEN)
14	ALARM LINE STRAINER(HIDDEN)
15	ALARM TEST VALVE
16	REMOTE FDC
17	CHECK VALVE
18	LOW PRESSURE SWITCH (HIDDEN) SEE DETAIL
19	4-WAY BRACING
20	PRESSURE GAUGE
21	VERTICAL UP Z-PATTERN 150 MM DOUBLE CHECK BACKFLOW ASSEMBLY

1 DRY PIPE (DPV) SPRINKLER RISER DETAIL

SCALE: NONE

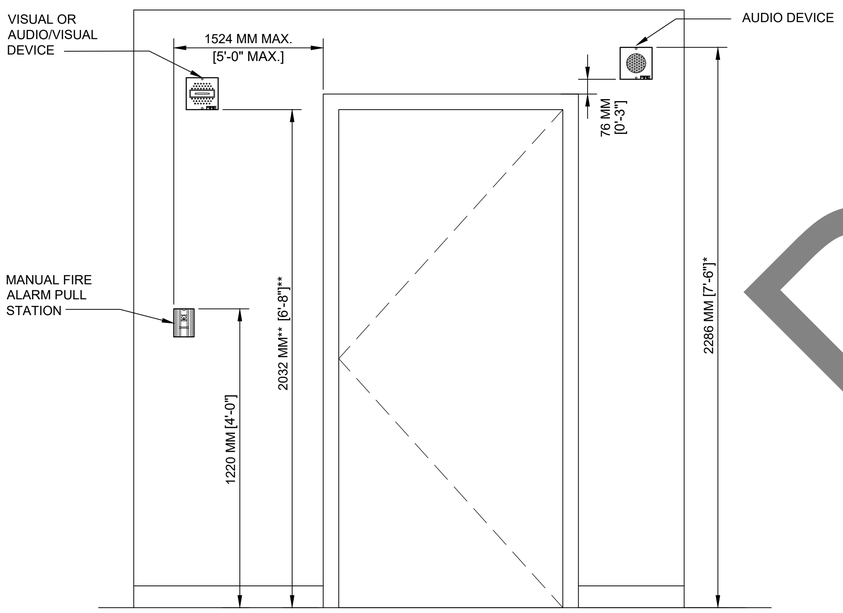

* IF CEILING HEIGHT DOES NOT PERMIT MOUNTING HEIGHTS NOTED FOR AUDIO DEVICES WHILE LEAVING A MINIMUM OF 150 MILIMETERS [6-INCHES] BETWEEN THE CEILING AND THE TOP OF THE AUDIO DEVICE, THE DEVICE SHALL BE MOUNTED AT 150 MILLIMETERS [6-INCHES] BELOW CEILING MEASURED TO THE TOP OF THE DEVICE.

** IF CEILING HEIGHT DOES NOT PERMIT MOUNTING HEIGHTS NOTED FOR VISUAL OR AUDIO/VISUAL DEVICE, THE DEVICE SHALL BE MOUNTED AT 150 MILLIMETERS [6-INCHES] BELOW CEILING MEASURED TO THE BOTTOM OF THE DEVICE.

3 TYPICAL MOUNTING DETAIL FOR FIRE ALARM DEVICES

SCALE: NONE

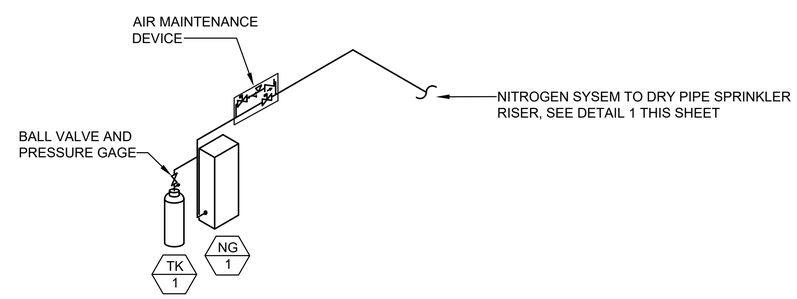

2 NITROGEN SYSTEM ISOMETRIC

SCALE: NONE

DRAFT

US Army Corps of Engineers®

MARK	DESCRIPTION	DATE

DESIGNED BY: RTB
DRAWN BY: TSW
CHECKED BY: JH
SUBMITTED BY:
SIZE: ISO A1
ISSUE DATE: FEBRUARY 2022
SOLICITATION NO.: -
CONTRACT NO.: W912HV-17-D-0007
DRAWING CODE: -
FILE NAME: DESSC20UX-F-501.dwg

U.S. ARMY CORPS OF ENGINEERS
FAR EAST DISTRICT
APO AP 96343-5310

HDR - WTNA JV
1001 BISHOP STREET
SUITE 400
HONOLULU, HAWAII 96813

MISAWA AIR BASE, JAPAN
DESC 20UX INSTALL ADDITIVE INJECTION SYSTEM

FIRE PROTECTION DETAILS

SHEET ID
F-501

ELECTRICAL SYMBOLS

- LED LIGHT FIXTURE, SURFACE CEILING MOUNTED
- LED LIGHT FIXTURE W/ EMERGENCY BATTERY PACK, SURFACE CEILING MOUNTED
- LED LIGHT FIXTURE, PENDANT MOUNTED
- LED LIGHT FIXTURE, PENDANT MOUNTED
- PANELBOARD, 1981mm (6'-6") TO TOP
- DUPLEX RECEPTACLE WITH GFCI PROTECTION, NEMA 5-20R, 125V, +460 AFF UON
- DUPLEX RECEPTACLE, NEMA 5-20R, 125V, +457mm (+18") AFF UON
- J — LARGE JUNCTION BOX, SIZE AS INDICATED
- J — LARGE JUNCTION BOX, WALL MOUNTED, SIZE AS INDICATED
- J — SMALL JUNCTION (OUTLET) BOX
- J — SMALL JUNCTION (OUTLET) BOX, WALL MOUNTED
- DISCONNECT SWITCH, HEAVY DUTY, HP-RATED, SIZE AS INDICATED, +1676 TO TOP UON, WP/EX
- COMBINATION MOTOR STARTER/DISCONNECT, WP/EX
- H — HORN
- T — DRY-TYPE TRANSFORMER
- T — DRY-TYPE TRANSFORMER, WALL MOUNTED UON
- T — TIME SWITCH
- E — EQUIPMENT CONNECTION, EXPLOSION PROOF
- M — MOTOR CONNECTION, EXPLOSION PROOF
- G — GENERATOR CONNECTION
- HAND-OFF-AUTO SWITCH, KEY OPERATED, EXPLOSION PROOF
- EFSO PUSH-BUTTON STATION, +1200mm AFF, RED MUSHROOM HEAD, KEY-RESET, EXPLOSION PROOF, WP WITH LEGEND PLATE "EMERGENCY FUEL SHUTDOWN", FOR EPSO MOUNTED ON PEDESTAL WITH OTHER EQUIPMENT. SEE DETAIL 4/E-507 FOR STAND ALONE EFSO AND DETAIL 5/E-507
- SEAL FITTING
- $ — SINGLE POLE SWITCH, 20A, 120/277V, - 3=3 WAY, 4=4 WAY, M=MANUAL MOTOR SWITCH, TS=TIME SWITCH, +1220 AFF
- MANHOLE
- HH — HANDHOLE OR PULLBOX
- G — GROUND ROD, SEE DETAIL 4/E-501
- LIGHTNING PROTECTION SYSTEM AIR-TERMINAL

AFF	ABOVE FINISHED FLOOR
CO	CONDUIT ONLY
EX	EXPLOSION-PROOF
UON	UNLESS OTHERWISE NOTED
WP	WEATHERPROOF

- CONDUIT UP
- CONDUIT DOWN
- CONDUIT & WIRING IN WALL OR CEILING
- CONDUIT & WIRING BELOW REFERENCED PLANE
- CONDUIT & WIRING EXPOSED
- HOMERUN TO APPLICABLE PANEL
- CONDUIT STUB
- FLEXIBLE CONDUIT

- C — TELECOMMUNICATION SYSTEM CONDUIT, 25C (1"C) MIN WITH PULLSTRING UON
- EM — EMERGENCY POWER SYSTEM CONDUIT & CONDUCTORS
- G — GROUND CONDUCTOR
- CONDUIT SIZE SHALL BE G22 UON. ANY CIRCUIT W/ NO TICK MARKS OR FURTHER DESIGNATION INDICATES A TWO (2) WIRE CIRCUIT. CIRCUITS W/ ADDITIONAL WIRES ARE INDICATED AS FOLLOWS: —//— 3 WIRES, —///— 4 WIRES, ETC. CONDUCTOR SIZE SHALL BE 2.0mm UON. DO NOT USE A COMMON NEUTRAL FOR MULTI-WIRE BRANCH CIRCUITS. PROVIDE A DEDICATED NEUTRAL FOR EACH CIRCUIT. THIS NOTE ALSO APPLIES TO SITE ELECTRICAL CONDUCTOR AND CONDUIT SYMBOLS.

ONE-LINE SYMBOLS

- PANELBOARD
- MOLDED CASE CIRCUIT BREAKER
- SAFETY SWITCH - NON FUSED

SITE ELECTRICAL SYMBOLS

- LED AREA LIGHT, SEE DETAIL 1/E-503
- EXISTING AREA LIGHT
- MANHOLE
- HANDHOLE OR PULLBOX
- UNDERGROUND DUCTLINE
- L — SITE LIGHTING DUCTLINE & WIRING
- C — SITE TELECOMMUNICATIONS DUCTLINE & WIRING

DUCT DESIGNATION

2 P 125 B

- B — DUCT SECTION "B" SEE DUCT SECTION DETAILS
- 125 — CONDUIT SIZE/DIAMETER IN MM
- P — SYSTEM
  - "P" PRIMARY ELECTRIC (NORMAL)
  - "S" SECONDARY ELECTRIC (NORMAL)
  - "EM" SECONDARY ELECTRIC (EMERGENCY)
  - "L" LIGHTING, STREET OR AREA
  - "C" TELECOMMUNICATIONS
  - "A" CONTROL (ANALOG)
  - "SP" SPARE
- 2 — NUMBER OF DUCTS

PULLBOX, HANDHOLE, MANHOLE SCHEDULE

- 22 — 600 x 600 x 900 ELECTRIC HANDHOLE
- 26 — 900 x 900 x 1100 ELECTRIC HANDHOLE
- 401 — 600 x 600 x 600 CONTROLS PULLBOX

ALL HANDHOLES AND MANHOLES SHALL HAVE A T-20 RATING MINIMUM.

DRAFT

US Army Corps of Engineers®

MARK	DESCRIPTION	DATE

DESIGNED BY: PKU
DRAWN BY: MKE
CHECKED BY: PKU
SUBMITTED BY: MK ENGINEERS, LTD
SIZE: ISO A1
ISSUE DATE: -
SOLICITATION NO.: -
CONTRACT NO.: W912HV-17-D-0007
DRAWING CODE: -
FILE NAME: DESSC2OUX-E-001.dwg

U.S. ARMY CORPS OF ENGINEERS
JAPAN DISTRICT
APO AP 96343-5010

HDR - WTNA JV
1132 BISHOP STREET
SUITE 2200
HONOLULU, HAWAII 96813

MISAWA AIR BASE, JAPAN
DESC 20UX INSTALL ADDITIVE INJECTION SYSTEM

ELECTRICAL AND ONE-LINE SYMBOLS

SHEET ID
E-001

FILE: DESSC2OUX-E-001.dwg
DATE: 6/25/2018 5:05 PM
OPER:
SCALE:

IF SHEET IS LESS THAN 594 X 841 MM
REDUCED PRINT = USE GRAPHIC SCALES

FINAL

LIGHTNING PROTECTION SYSTEM NOTES

1. PROVIDE AND INSTALL COPPER AIR TERMINAL . MINIMUM DIAMETER OF 16mm FOR SOLID COPPER AIR TERMINAL. AIR TERMINALS WITH CRIMP TYPE CABLE CONNECTORS SHALL NOT BE PERMITTED. THE MINIMUM HEIGHT OF ALL AIR TERMINALS SHALL BE 254mm ABOVE THE ROOF OR OTHERWISE. ALL AIR TERMINALS OVER 600mm SHALL BE SUPPORTED AT A POINT NOT LESS THAN HALF ITS HEIGHT.

2. ALL EXTERIOR HAND RAILS, STAIRWAYS, PIPES, TUBING, ROOF DRAINS, CONDUITS OR OTHER METAL SURFACE WITHIN THE DISTANCE OF 1.7 m FROM THE MAIN CONDUCTOR AT MAIN ROOF LEVEL AND 2.4 m FROM THE MAIN CONDUCTOR AT UPPER SUBROOF LEVEL SHALL BE BONDED TO THE LIGHTNING PROTECTION SYSTEM WITH A BONDING CONDUCTOR SIZE NO LESS THAN 14mm SQ WITH STRANDING WIRE SIZE OF NO LESS THAN 1.6mm SQ.

3. MAIN CONDUCTORS SHALL BE FASTENED TO THE STRUCTURE UPON WHICH THEY ARE PLACED AT INTERVALS NOT EXCEEDING 0.9 m. ADHESIVE TYPE STAINLESS STEEL CABLE HOLDER OR CONDUCTOR SUPPORT SHALL BE USED FOR FLAT ROOF SURFACE WITH SURFACE COMPATIBLE ADHESIVE. THE BOLT TYPE STAINLESS STEEL FASTENERS AND SUPPORTS SHALL BE USED TO SECURE THE MAIN-CONDUCTOR ON THE REST OF THE ROOF AREA. THE CONDUCTOR FASTENERS AND SUPPORTS SHALL NOT BE SUBJECT TO BREAKAGE. MINIMUM SIZE OF THE BONDING CONDUCTOR USED FOR THE BONDING OF GROUNDED METAL BODIES OR ISOLATED METAL BODIES REQUIRING CONNECTION TO THE LIGHTNING PROTECTION SYSTEM SHALL HAVE SIZE NO LESS THAN 14mm SQ WITH STRANDING WIRE SIZE OF NO LESS THAN 1.6mm SQ.

4. NO BEND OF A CONDUCTOR SHALL FORM AN INCLUDED ANGLE OF LESS THAN 90 DEGREES, NOR SHALL IT HAVE A RADIUS OF BEND LESS THAN 203 mm AND CONDUCTORS SHALL BE PERMITTED TO BE COURSED THROUGH AIR WITHOUT SUPPORT FOR A DISTANCE OF 0.9 m OR LESS.

5. USE BIMETAL BONDING PLATES, CONNECTORS, AND FITTINGS FOR SPLICING OR BONDING DISSIMILAR METAL. MASONRY ANCHORS USED TO ATTACH LIGHTNING PROTECTION MATERIALS SHALL HAVE MINIMUM OUTSIDE DIAMETER OR 6.4 MM, AND HOLES MADE TO RECEIVE THE BODY OF THE ANCHOR SHALL BE OF THE CORRECT SIZE, MADE IN THE BRICK, STONE, OR OTHER MASONRY UNIT RATHER THAN IN MORTAR JOINTS. WHERE ANCHORS ARE INSTALLED, THE FIT SHALL BE TIGHT AGAINST MOISTURE, THUS REDUCING THE POSSIBILITY OF DAMAGE DUE TO FREEZING.

6. THE DOWN CONDUCTOR SHALL GO DOWN IN RIGID GALVANIZED STEEL CONDUITS AND IT SHALL BE ATTACHED PERMANENTLY TO THE GROUNDING ELECTRODE SYSTEM AT A GROUND ROD BY EXOTHERMIC WELDING. PROVIDE GROUND WELL AT ALL OF THE CONNECTIONS BETWEEN A DOWN CONDUCTOR AND A GROUND ROD IN THE GROUND RING SYSTEM. BOND THE CONDUIT TO THE STRUCTURAL STEEL AT THE TOP AND BOTTOM ENDS OF THE CONDUIT.

7. GROUND RODS SHALL BE COPPER-CLAD STEEL, A MINIMUM OF 3 m IN LENGTH, SPACED APART 6 m, AND SIZE NO LESS THAN 19mm IN DIAMETER. THE THICKNESS OF THE COPPER JACKET SHALL NOT BE LESS THAN 0.3mm. GROUNDING ELECTRODE CONNECTION SHALL EXTEND AT LEAST 0.6 m AWAY FROM THE FOUNDATION WALLS OF THE BUILDING. THE GROUND RODS SHALL BE BURIED AT LEAST 0.45 m BELOW GRADE LEVEL, AND IT SHALL BE INTERCONNECTED WITH A BARE STRANDED COPPER GROUND RING CONDUCTOR. THE GROUND RING CONDUCTOR SHALL BE BURIED AT A DEPTH BELOW THE EARTH'S SURFACE OF NOT LESS THAN 762mm.

8. PROVIDE AND INSTALL A GROUND RING CONDUCTOR PER PLAN USING A BARE COPPER CONDUCTOR WITH SIZE NO LESS THAN 150mm SQ WITH STRANDING WIRE SIZE OF NO LESS THAN 2.0mm SQ. BOND THE GROUND RING TO ALL DOWN CONDUCTORS AND ALL GROUNDING RODS. IT WILL NOT, HOWEVER, BOND TO METALLIC UTILITIES SUCH AS GAS AND WATER AND WILL NOT BOND TO OTHER METALLIC OBJECTS PER THE UFC SUCH AS THE BUILDING STRUCTURAL STEEL.

9. A BARE COPPER CABLES WITH SIZE NO LESS THAN 60mm SQ WITH STRANDING WIRE SIZE OF NO LESS THAN 2.0mm SQ SHALL BE USED TO BOND ELECTRICAL AND TELECOM SERVICE GROUNDING POINTS INDICATED PER PLAN.

10. PROVIDE ADHESIVE CABLE HOLDER TO SUPPORT THE MAIN CONDUCTOR ON THE FLAT SURFACES. CABLE HOLDERS ARE PLACED AT INTERVALS NOT EXCEEDING 0.9 METERS. SEE 1/E-507.

11. COPPER LIGHTNING PROTECTION MATERIAL SHOULD NOT BE IN CONTACT WITH ALUMINUM SURFACE.

12. PROVIDE T-SPLICE AND CROSS-RUN CLAMP, TYPICAL. SEE 1/E-506.

13. PROVIDE BONDING PLATE TO CONNECT THE BASE OR LOWER EDGES OF THE METALLIC OBJECT TO MAIN CONDUCTOR. USE BONDING PLATE THAT HAVE A SURFACE CONTACT AREA OF NO LESS THAN 1940mm SQUARE (3" SQUARE), AND PROVIDE TWO OR MORE PATHS TO MAIN CONDUCTOR.

ABBREVIATIONS

&	AND
@	AT
#	NUMBER
+	PLUS
A,AMPS	AMPERES
ABV	ABOVE
AC	ALTERNATING CURRENT
A.C.	ASPHALT CONCRETE
ACU	AIR CONDITIONING UNIT
A/C	AIR CONDITIONER
ADJ	ADJACENT
AF	AMPERE FRAME
AFF	ABOVE FINISHED FLOOR
AFG	ABOVE FINISHED GRADE
AHU	AIR HANDLING UNIT
AIC	AMPERES INTERRUPTING CAPACITY
ALUM	ALUMINUM
AM	AMMETER
APPROX	APPROXIMATE
ARCH	ARCHITECTURAL
AT	AMPERE TRIP
ATS	AUTOMATIC TRANSFER SWITCH
AUTO	AUTOMATIC
AUX	AUXILIARY
BATT	BATTERY
BC	BARE COPPER
BD	BOARD
BKBD	BACKBOARD
BKR	BREAKER
BLDG	BUILDING
BMS	BALANCED MAGNETIC SWITCH
BRKT	BRACKET
C	CONDUIT
CAB	CABINET
CAT	CATEGORY
CATV	CABLE TELEVISION
CB	CIRCUIT BREAKER
CC	CENTER TO CENTER
CCTV	CLOSED CIRCUIT TELEVISION
CHH	COMMUNICATION HANDHOLE
CKT	CIRCUIT
CKTS	CIRCUITS
CL	CLEARANCE
CLF	CURRENT LIMITING FUSE
CLG	CEILING
CM	CENTIMETER
CMP	COMMUNICATION PLENUM
CMU	CONCRETE MASONRY UNIT
CO	CONDUIT ONLY
COL	COLUMN
COMM	COMMUNICATION
COMP	COMPUTER
CONC	CONCRETE
CONN	CONNECT, CONNECTION
CONT	CONTINUOUS
CP	CATHODIC PROTECTION
CRI	COLOR RENDERING INDEX
CT	CURRENT TRANSFORMER
CTS	CURRENT TRANSFORMERS
CU	COPPER
DBL	DOUBLE
DC	DIRECT CURRENT
D,DIA	DIAMETER
DEMO	DEMOLITION
DEPT	DEPARTMENT
DET	DETAIL
DF	DEMAND FACTOR
DIA	DIAMETER
DIAG	DIAGONAL
DI/DO	DIGITAL INPUT/DIGITAL OUTPUT
DISA	DEFENSE INFORMATION SYSTEMS AGENCY
DISC	DISCONNECT
DIST	DISTRIBUTION
DIV	DIVISION
DN	DOWN
DOT	DEPARTMENT OF TRANSPORTATION
DP	DIFFERENTIAL PRESSURE, DEEP
DT	DRY-TYPE
DWG	DRAWING
DWGS	DRAWINGS
EA	EACH
EF	EXHAUST FAN
EFSO	EMERGENCY FUEL SHUT-OFF
EHH	ELECTRIC HANDHOLE
ELEC	ELECTRICAL
ELEV	ELEVATION
EMH	ELECTRICAL MANHOLE
EMERG	EMERGENCY
EMT	ELECTRICAL METALLIC TUBING
EO/H	EXISTING OVERHEAD LINE
ENCL	ENCLOSURE
EP	EXPLOSION-PROOF
EPR	ETHYLENE PROPYLENE RUBBER
EQPT	EQUIPMENT
EQUIP	EQUIPMENT
EWC	ELECTRIC WATER COOLER
EX	EXPLOSION PROOF
EXH	EXHAUST
EXST	EXISTING
EXIST	EXISTING
EXT	EXTERIOR
FA	FIRE ALARM
FCBN	FULL CAPACITY BELOW NORMAL
FCO	FUSED CUT OUT
FCU	FAN COIL UNIT
FDN	FOUNDATION
FDP	FIBER DISTRIBUTION PANEL
FDR	FEEDER
FG	FINISHED GRADE
FIG	FIGURE
FIN	FINISH
FIXT	FIXTURE
FLEX	FLEXIBLE
FLR	FLOOR
FLUOR	FLUORESCENT
FRP	FIBERGLASS REINFORCED PLASTIC
FT	FOOT/FEET
FU	FUSE
FVNR	FULL VOLTAGE NON-REVERSING
G,GND	GROUND
GA	GAUGE
GAL	GALLONS
GALV	GALVANIZED
GEN	GENERATOR
GFI	GROUND FAULT INTERRUPT
GFCI	GOVERNMENT FURNISHED CONTRACTOR INSTALLED
GFGI	GOVERNMENT FURNISHED GOVERNMENT INSTALLED
GOVT	GOVERNMENT
GRC	GALVANIZED RIGID CONDUIT
GRS	GALVANIZED RIGID STEEL CONDUIT
GSA	GENERAL SERVICES ADMINISTRATION
GYP	GYPSUM
H	HEIGHT
HEX	HEXAGON
HH	HANDHOLE
HHCS	HEX HEAD CAP SCREW
HMCP	HEATING MOTOR CONTROL PROTECTION
HO	HIGH OUTPUT
HOA	HAND-OFF-AUTO
HORIZ	HORIZONTAL
HP	HORSEPOWER
HPF	HIGH POWER FACTOR
HR	HOUR
HSG	HOUSING
HT	HEIGHT
HTR	HEATER
HV	HIGH VOLTAGE
HZ	HERTZ
IC	INTERRUPTING CAPACITY
ID	IDENTIFICATION
IDF	INTEMEDIATE DISTRIBUTION FRAME
I.E.	THAT IS
IEC	INTERNATIONAL ELECTROTECHNICAL
IES	ILLUMINATING ENGINEERING SOCIETY
IMC	INTERMEDIATE METALLIC CONDUIT
IN	INCH
INSUL	INSULATION
IRRIG	IRRIGATION
IT	INFORMATION TECHNOLOGY
JB	JUNCTION BOX
JP	JOINT POLE
K	KELVIN
KA	KILO-AMPS
KCM	KILO CIRCULAR MILS
KCMIL	KILO CIRCULAR MILS
KG	KILOGRAM
KIUC	KAUAI ISLAND UTILITY COOPERATIVE
KMPH	KILOMETERS PER HOUR
KN	KILO NEWTON
KPa	KILO PASCALS
KV	KILO-VOLTS
KVA	KILO-VOLT-AMPERE
KVAR	KILO-VOLT-AMPERE REACTIVE
KW	KILOWATT
KWH	KILOWATT HOUR
KWHR	KILOWATT HOUR
L	LENGTH
LAB	LABORATORY
LBS	POUNDS
LC	LEAD COVERED CABLE
L-L	LINE TO LINE
LG	LONG
LPS	LIGHTNING PROTECTION SYSTEM
LT	LIGHT
LTG	LIGHTING
M	METER
MACH	MACHINE
MAX	MAXIMUM
MCC	MOTOR CONTROL CENTER
MCM	THOUSAND CIRCULAR MILS
MDF	MAIN DISTRIBUTION FRAME
MECH	MECHANICAL
MFG	MANUFACTURER
MH	MANHOLE
MIN	MINIMUM
ma	MILLIAMPERE
mm	MILLIMETER
MISC	MISCELLANEOUS
MPH	MILES PER HOUR
MT	MOUNT
MTD	MOUNTED
MTG	MOUNTING
MTS	MANUAL TRANSFER SWITCH
MULTI	MULTIPLE
MVA	MEGA-VOLT-AMPERE
NC	NOISE CRITERION
N.C.	NORMALLY CLOSED
NEC	NATIONAL ELECTRICAL CODE
NEMA	NATIONAL ELECTRICAL MANUFACTURERS ASSOCIATION
NF	NON-FUSED
NFPA	NATIONAL FIRE PROTECTION ASSOCIATION
NFSW	NON-FUSED SWITCH
NIC	NOT IN CONTRACT
NL	NIGHT LIGHT
NO	NUMBER
N.O.	NORMALLY OPEN
NTS	NOT TO SCALE
N1	NEMA TYPE 1 ENCLOSURE
N3R	NEMA TYPE 3R ENCLOSURE
N4X	NEMA TYPE 4X ENCLOSURE
N12	NEMA TYPE 12 ENCLOSURE
O.C.	ON CENTER
O.D.	OUTSIDE DIAMETER
OFCI	OWNER FURNISHED CONTRACTOR INSTALLED
OFOI	OWNER FURNISHED OWNER INSTALLED
O/H	OVERHEAD
O.L.	OVERLOAD
P	POLE
PA	PUBLIC ADDRESS
PAV'T	PAVEMENT
PB	PULLBOX
PDS	PROTECTED DISTRIBUTED SYSTEM
PF	POWER FACTOR
PFB	PROVISION FOR FUTURE CIRCUIT BREAKER
PH	PHASE
PIC	POLYOLEFIN INSULATED CONDUCTOR
PLC	PROGRAMMABLE LOGIC CONTROLLER
PLYBD	PLYBOARD
PLYWD	PLYWOOD
PMP	PUMP
PNL	PANEL
PP	POWER POLE
PRESS	PRESSURE
PSI	POUNDS PER SQUARE INCH
PT	POTENTIAL TRANSFORMER
PTS	POTENTIAL TRANSFORMERS
PVC	POLYVINYL CHLORIDE
PVMT	PAVEMENT
PWR	POWER
QTY	QUANTITY
QUAD	QUADRUPLE
RCPT	RECEPTACLE
REINF	REINFORCED
RFI	RADIO FREQUENCY INTERFERENCE
RGC	RIGID GALVANIZED CONDUIT
RM	ROOM
RPM	REVOLUTIONS PER MINUTE
RQ'D	REQUIRED
RQMT	REQUIREMENT
RVNR	REDUCED VOLTAGE NON-REVERSING
SCADA	SUPERVISORY CONTROL AND DATA AQUISITION
SCHD	SCHEDULE
SCHED	SCHEDULE
SDBC	SOFT DRAWN BARE COPPER
SEC	SECONDARY
SECT	SECTION
SHT	SHEET
SIM	SIMILAR
SLH	STREET LIGHT HANDHOLE
SN	SOLID NEUTRAL
SPEC	SPECIFICATION
SPKR	SPEAKER
SPST	SINGLE POLE SINGLE THROW
SQ	SQUARE
SS	STAINLESS STEEL
SSRV	SOLID STATE REDUCED VOLTAGE STARTER
STA	STATION
STD	STANDARD
SVC	SERVICE
SW	SWITCH
SWBD	SWITCHBOARD
SWGR	SWITCHGEAR
SYM	SYMMETRICAL
SYS	SYSTEM
TC	TELEPHONE CABINET
TCLP	TOXIC CHARACTERISTIC LEACHING PROCEDURE
TEL	TELEPHONE
TEMP	TEMPORARY
TGB	TELECOM GROUND BAR
THD	TOTAL HARMONIC DISTORTION
THH	TELEPHONE HANDHOLE
THK	THICK
TMGB	TELECOM MASTER GROUND BAR
TMH	TELECOMMUNICATIONS MANHOLE
TSP	TWISTED SHIELDED PAIR
TYP	TYPICAL
U	UNIT
UBC	UNIFORM BUILDING CODE
UG	UNDERGROUND
UL	UNDERWRITERS LABORATORIES
UON	UNLESS OTHERWISE NOTED
UPS	UNINTERRUPTABLE POWER SYSTEM
UTP	UNSHIELDED TWISTED PAIR
UV	ULTRAVIOLET
V	VOLT
VA	VOLT-AMPERE
VARS	VOLT-AMPERES REACTIVE
VCB	VACUUM CIRCUIT BREAKER
VDC	VOLTS DIRECT CURRENT
VERT	VERTICAL
VFD	VARIABLE FREQUENCY DRIVE
VM	VOLTMETER
W	WATT
W	WIDTH
W	WIRE
W/	WITH
WHM	WATTHOUR METER
WHSE	WAREHOUSE
WP	WEATHER-PROOF
XFMR	TRANSFORMER
XLP	CROSS-LINKED POLYETHYLENE INSULATION

DRAFT

19058

US Army Corps of Engineers®

MARK | DESCRIPTION | DATE

ISSUE DATE: -
SOLICITATION NO.: -
CONTRACT NO.: W912HV-17-D-0007
DRAWING CODE: -
DESIGNED BY: BKMAKAIAU
DRAWN BY: MKE
CHECKED BY: PKUYEDA
SUBMITTED BY: MK ENGINEERS, LTD
SIZE: ISO A1
FILE NAME: DESSC2OUX-E-002.dwg

U.S. ARMY CORPS OF ENGINEERS
JAPAN DISTRICT
APO AP 96343-5010

HDR - WTNA JV
1132 BISHOP STREET
SUITE 1200
HONOLULU, HAWAII 96813

DESC 20UX
INSTALL ADDITIVE INJECTION SYSTEM
MISAWA AIR BASE, JAPAN

ABBREVIATIONS

SHEET ID

E-002

FILE: DESSC2OUX-E-002.dwg
DATE: 6/25/2018 5:05 PM
OPER:
SCALE:

IF SHEET IS LESS THAN 594 X 841 MM
REDUCED PRINT = USE GRAPHIC SCALES

100%

C:\Users\brent\MK Engineers\W (CAD) - General\01_PROJECTS\2019\19058_Misawa_InstlAddInjectSys\01_dwg\Sheets\DESSC2OUX-E-002.dwg, Layout1, 2/12/2021 1:50:55 PM, brent, 1:1

HAZARDOUS LOCATION CLASSIFICATION NOTES:

1. HAZARDOUS LOCATIONS SHALL BE DEFINED IN ACCORDANCE WITH UFC 3-460-01 AND API 500 (LATEST EDITIONS). JP-8 AND OTHER COMBUSTIBLE LIQUIDS UNDER PRESSURE SHALL BE CONSIDERED FLAMMABLE LIQUIDS.

2 CLASS 1/DIVISION 1 LOCATIONS INCLUDE (BUT ARE NOT LIMITED TO):

a. 0.9 METER/3-FEET IN ALL DIRECTIONS OF FILL OPENINGS OR VENTS TO WHICH FLAMMABLE LIQUIDS ARE BEING TRANSFERRED.

b. 1.5 METER/5-FEET IN ALL DIRECTIONS FROM VENTS AND OPENINGS OF STORAGE TANKS.

c. ENTIRE PIT, SUMP, OPEN TRENCH OR DEPRESSION IN WHICH ANY PART IS LOCATED WITHIN A CLASS 1/DIVISION 1 OR CLASS 1/DIVISION 2 LOCATION AND IS WITHOUT MECHANICAL VENTILATION.

d. WITHIN AND ON EXTERIOR WALLS OF OPEN TOP SPILL CONTAINMENT STRUCTURES, OIL-WATER SEPARATORS AND SPILL CONTAINMENT BOXES.

e. LOCATIONS AT FUEL DISPENSERS.

f. LOCATIONS WITHIN 0.9 METERS/3-FEET IN ALL DIRECTIONS FROM VENTS WHEN LOADING A FUEL TRUCK THROUGH THE BOTTOM CONNECTION.

g. INTERIORS OF PUMP HOUSES AND FILTER ROOMS.

3 CLASS 1/DIVISION 2 LOCATIONS INCLUDE (BUT ARE NOT LIMITED TO):

a. OUTDOOR LOCATIONS BETWEEN 1.5 METERS/5-FEET AND 3-METERS/10-FEET OF VENT AND OPENINGS OF STORAGE TANKS.

b. ENTIRE PIT, SUMP, OPEN TRENCH OR DEPRESSION IN WHICH ANY PART IS LOCATED WITHIN A CLASS 1/DIVISION 1 OR CLASS 1/DIVISION 2 LOCATION AND IS PROVIDED WITH MECHANICAL VENTILATION.

c. OUTDOOR LOCATIONS WITHIN 0.9 METERS/3-FEET IN ALL DIRECTIONS FROM PUMPS, AIR-RELIEF VALVES, WITHDRAWAL FITTINGS, FLANGED/BOLTED FITTINGS, METERS AND SIMILAR DEVICES. IN ADDITION, THE AREA 450mm/18-INCHES ABOVE GRADE AND 3 METERS/10-FEET HORIZONTALLY FROM ANY SURFACE OF PUMPS, AIR-RELIEF VALVES, WITHDRAWAL FITTINGS, FLANGED/BOLTED FITTINGS, METERS AND SIMILAR DEVICES.

d. LOCATIONS EXTENDING 450mm/18-INCHES ABOVE GRADE AND WITHIN 4.6 METERS/15-FEET HORIZONTALLY FROM ANY SURFACE OF OPEN TOP SPILL CONTAINMENT STRUCTURES INCLUDING OIL/WATER SEPARATORS AND SPILL CONTAINMENT BOXES.

e. AREA BETWEEN 0.9 METERS/3-FEET AND 3-METERS/10-FEET EXTENDING IN ALL DIRECTIONS FROM VENTS WHEN LOADING A FUEL TRUCK. IN ADDITION, THE AREA 450mm/18-INCHES ABOVE GRADE AND 3 METERS/10-FEET HORIZONTALLY FROM THE TRUCK LOAD CONNECTION.

4. ELECTRICAL MATERIALS, EQUIPMENT, AND DEVICES FOR INSTALLATION IN HAZARDOUS LOCATIONS MUST COMPLY WITH JNIOSH-TR-46-1:2015, JNIOSH-TR-46-2:2018, JIS C 60079-0 AND JIS C 60079-14 FOR ELECTRICAL EQUIPMENT AND INDUSTRIAL CONTROLS AND JIS C 60079-0 AND JIS C 60079-14 FOR MOTORS.

DETAIL LEGEND

- CLASS 1, DIVISION 1, GROUP D HAZARDOUS AREA
- CLASS 1, DIVISION 2, GROUP D HAZARDOUS AREA
- NON-CLASSIFIED AREA

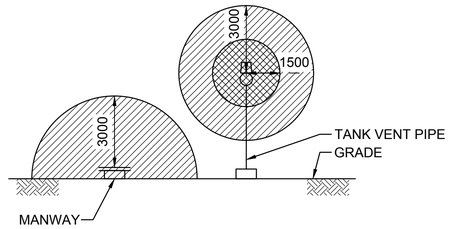

1 TYPICAL VENT AND MANWAY DETAIL
NOT TO SCALE

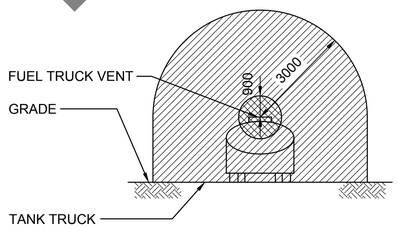

2 TANK TRUCK DETAIL
NOT TO SCALE

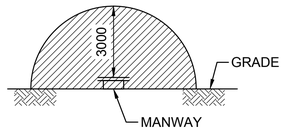

3 TYPICAL VENT DETAIL
NOT TO SCALE

DRAFT

US Army Corps of Engineers®

MARK	DESCRIPTION	DATE

DESIGNED BY: PKU
DRAWN BY: MWE
CHECKED BY: PKU
SUBMITTED BY: MK ENGINEERS, LTD
SIZE: ISO A1
ISSUE DATE: -
SOLICITATION NO.: -
CONTRACT NO.: W912HV-17-D-0007
DRAWING CODE: -
FILE NAME: DESSC2OUX-E-003.dwg

U.S. ARMY CORPS OF ENGINEERS
JAPAN DISTRICT
APO AP 96343-5010

HDR - WTNA JV
1132 BISHOP STREET
SUITE 1200
HONOLULU, HAWAII 96813

MISAWA AIR BASE, JAPAN
DESC 20UX INSTALL ADDITIVE INJECTION SYSTEM

HAZARDOUS LOCATION CLASSIFICATION NOTES AND DETAILS

SHEET ID
E-003

FILE: DESSC2OUX-E-003.dwg
DATE: 6/25/2018 5:05 PM
OPER:
SCALE:

IF SHEET IS LESS THAN 594 X 841 MM
REDUCED PRINT = USE GRAPHIC SCALES

FINAL

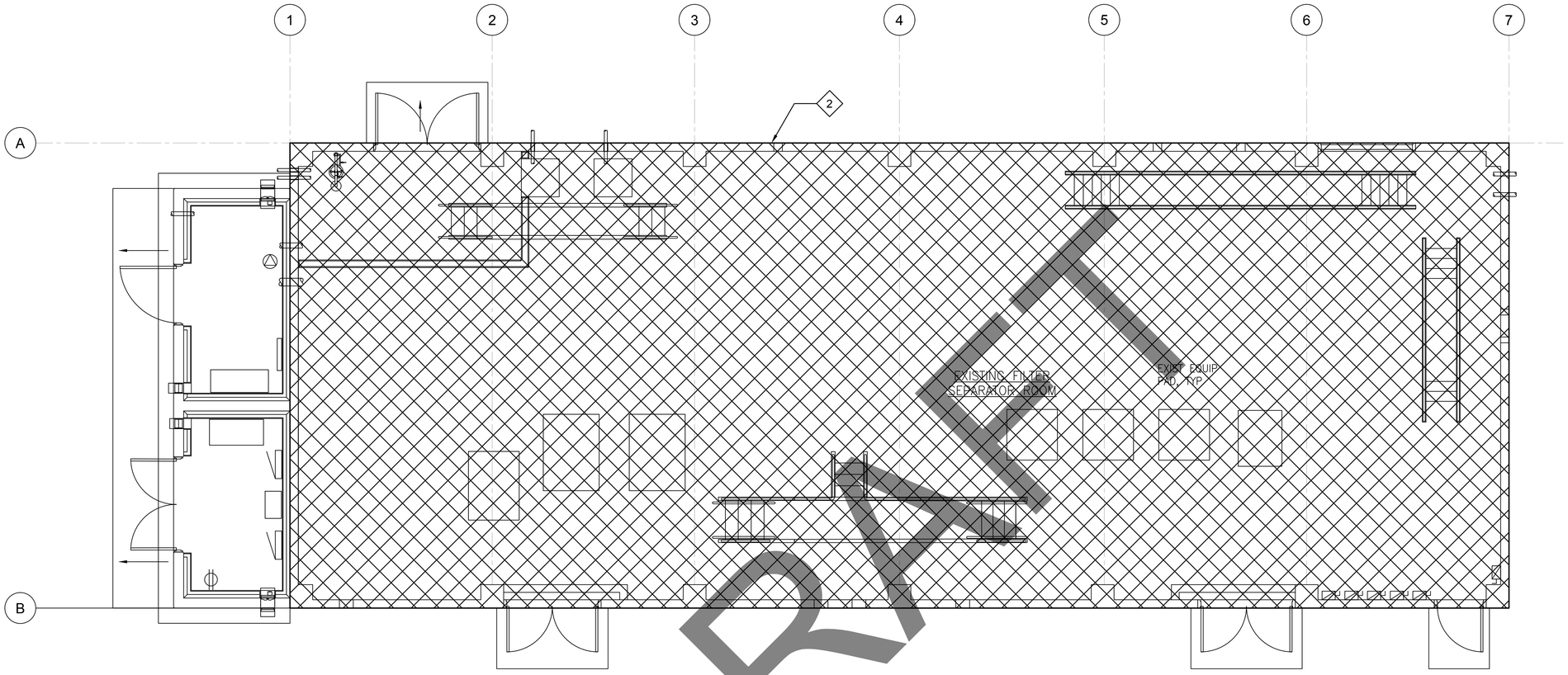

DRAFT

NORTH

HAZARDOUS LOCATION CLASSIFICATION PLAN - FILTER BUILDING

SCALE: 1:50

NOTES:

1. LIGHT LINES DENOTE EXISTING CONDITION
   BOLD LINES DENOTE NEW WORK
   "X" DENOTES REMOVAL WORK
2. SEE HAZARDOUS LOCATION CLASSIFICATION NOTES ON SHEET E-003 .

DETAIL LEGEND

- CLASS 1, DIVISION 1, GROUP D HAZARDOUS AREA
- CLASS 1, DIVISION 2, GROUP D HAZARDOUS AREA
- NON-CLASSIFIED AREA

0 2500 5000

1:50

US Army Corps of Engineers®

MARK	DESCRIPTION	DATE

DESIGNED BY: PKU
DRAWN BY: MWE
CHECKED BY: PKU
SUBMITTED BY: MK ENGINEERS, LTD
SIZE: ISO A1
ISSUE DATE: -
SOLICITATION NO.: -
CONTRACT NO.: W912HV-17-D-0007
DRAWING CODE: -
FILE NAME: DESSC2OUX-E-004.dwg

U.S. ARMY CORPS OF ENGINEERS
JAPAN DISTRICT
APO AP 96343-5010

HDR - WTNA JV
1132 BISHOP STREET
SUITE 1200
HONOLULU, HAWAII 96813

MISAWA AIR BASE, JAPAN
DESC 20UX INSTALL ADDITIVE INJECTION SYSTEM

HAZARDOUS LOCATION CLASSIFICATION PLAN - FILTER BUILDING

SHEET ID

E-004

FILE: DESSC2OUX-E-004.dwg
DATE: 6/25/2018 5:05 PM
OPER:
SCALE:

IF SHEET IS LESS THAN 594 X 841 MM
REDUCED PRINT = USE GRAPHIC SCALES

FINAL

C:\Users\ftp\MK Engineers\W (CAD) - General\01_PROJECTS\2019\19058_Misawa_InstlAddInjectSys\01_Dwg\Sheets\DESSC2OUX-E-004.dwg, Layout1, 12/22/2021 8:55:49 AM, ftp, 1:1

19058

DETAIL

LEGEND

CLASS 1, DIVISION 1, GROUP D HAZARDOUS AREA

CLASS 1, DIVISION 2, GROUP D HAZARDOUS AREA

NON-CLASSIFIED AREA

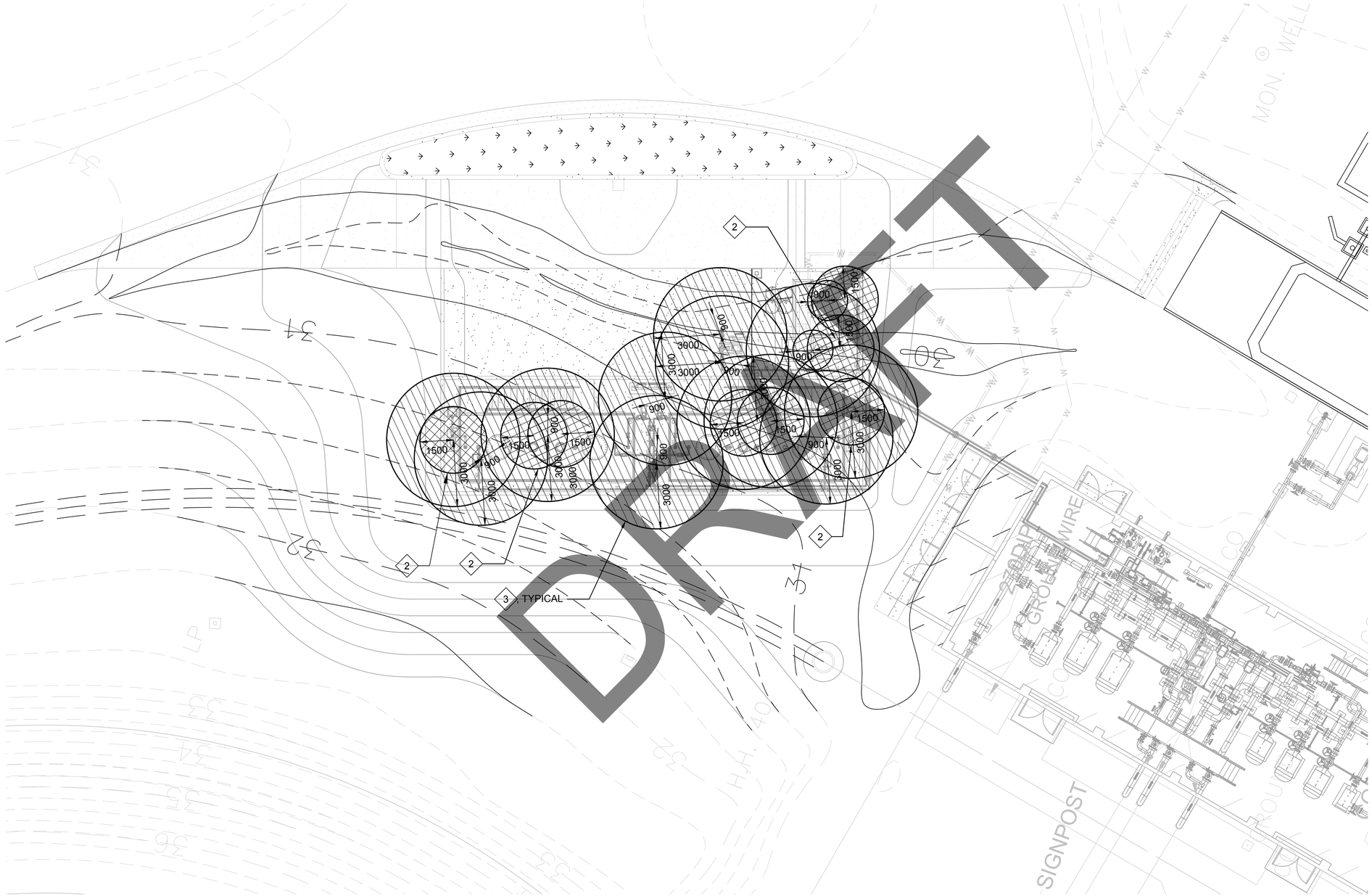

NORTH

HAZARDOUS LOCATION CLASSIFICATION PLAN - ADDITIVE INJECTION FACILITY

SCALE: 1:100

NOTES:

1. SEE HAZARDOUS LOCATION CLASSIFICATION NOTES, SHEET E-003 .

0 5000 10000

1:100

US Army Corps of Engineers®

MARK	DESCRIPTION	DATE

DESIGNED BY: PKU
DRAWN BY: MKE
CHECKED BY: PKU
SUBMITTED BY: MK ENGINEERS, LTD
SIZE: ISO A1
ISSUE DATE: -
SOLICITATION NO.: -
CONTRACT NO.: W912HV-17-D-0007
DRAWING CODE: -
FILE NAME: DESSC2OUX-E-005.dwg

U.S. ARMY CORPS OF ENGINEERS
JAPAN DISTRICT
APO AP 96343-5010

HDR - WTNA JV
1132 BISHOP STREET
SUITE 1200
HONOLULU, HAWAII 96813

MISAWA AIR BASE, JAPAN
DESC 20UX INSTALL ADDITIVE INJECTION SYSTEM

HAZARDOUS LOCATION CLASSIFICATION PLAN - ADDITIVE INJECTION FACILITY

SHEET ID

E-005

FILE: DESSC2OUX-E-005.dwg
DATE: 6/25/2018 5:05 PM
OPER:
SCALE:

IF SHEET IS LESS THAN 594 X 841 MM
REDUCED PRINT = USE GRAPHIC SCALES

FINAL

C:\Users\ky.MK Engineers\V (CAD) - General\01_PROJECTS\2019\19058_Misawa_InstAddInjectSys\01_dwg\Sheets\DESSC2OUX-E-005.dwg, Layout1, 12/22/2021 9:20:37 AM, ky, 1:1

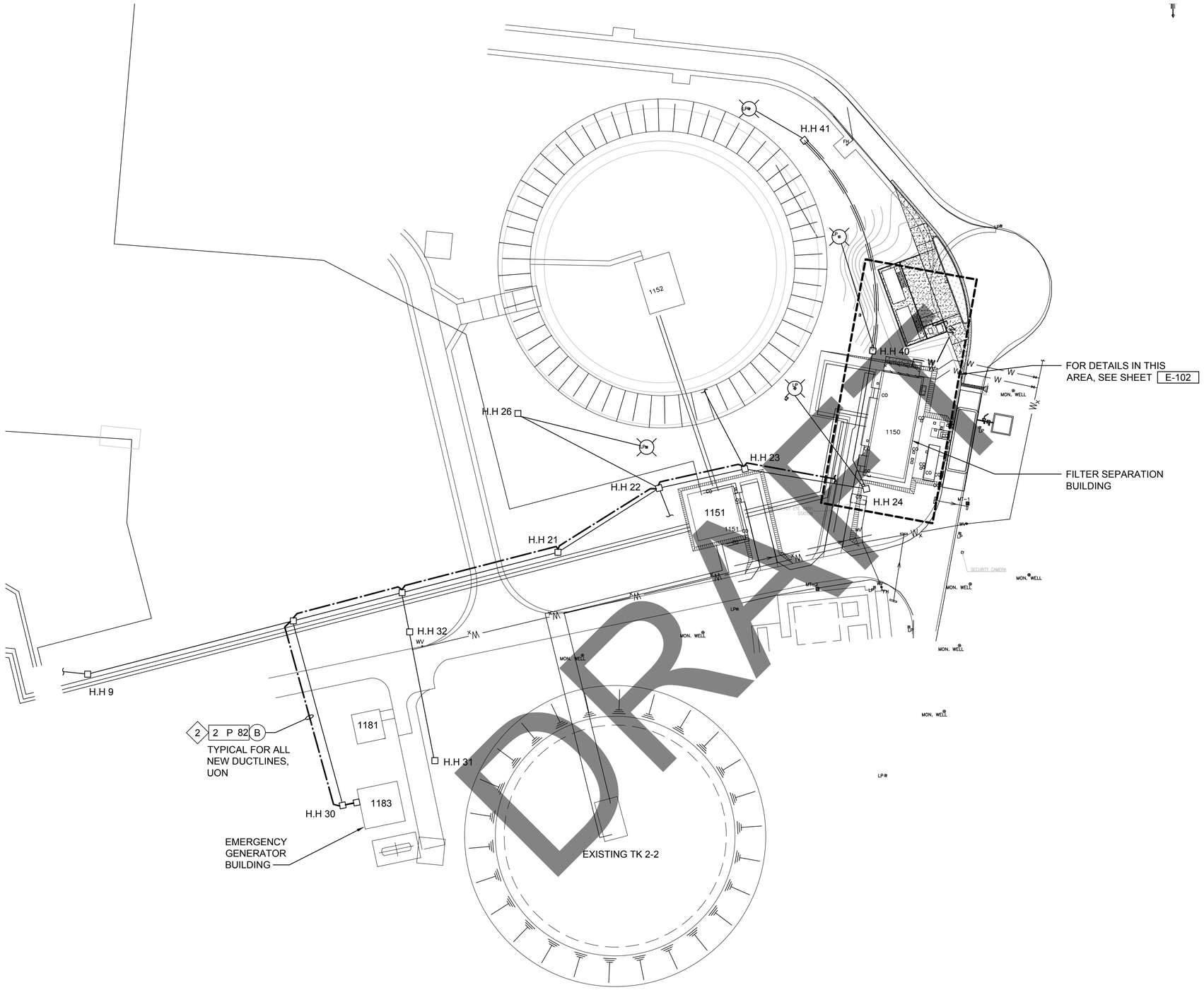

NORTH

OVERALL SITE ELECTRICAL PLAN

SCALE: 1:500

NOTES:

1. LIGHT LINES DENOTE EXISTING CONDITION
   BOLD LINES DENOTE NEW WORK
   "X" DENOTES REMOVAL WORK

2 PROVIDE 3 - 150mmSQ, AND 14mmSQ GROUND IN NEW 82mm HIVE CONCRETE ENCASED DUCTLINES.

0 25M 50M

1:500

US Army Corps of Engineers®

MARK	DESCRIPTION	DATE

DESIGNED BY: PKU
DRAWN BY: MKE
CHECKED BY: PKU
SUBMITTED BY: MK ENGINEERS, LTD
SIZE: ISO A1
ISSUE DATE: -
SOLICITATION NO.: -
CONTRACT NO.: W912HV-17-D-0007
DRAWING CODE: -
FILE NAME: DESSC2OUX-E-101.dwg

U.S. ARMY CORPS OF ENGINEERS
JAPAN DISTRICT
APO AP 96343-5010

HDR - WTNA JV
1132 BISHOP STREET
SUITE 1200
HONOLULU, HAWAII 96813

MISAWA AIR BASE, JAPAN
DESC 20UX INSTALL ADDITIVE INJECTION SYSTEM

OVERALL SITE ELECTRICAL PLAN

SHEET ID

E-101

FILE: DESSC2OUX-E-101.dwg
DATE: 6/25/2018 5:05 PM
OPER:
SCALE:

IF SHEET IS LESS THAN 594 X 841 MM
REDUCED PRINT = USE GRAPHIC SCALES

FINAL

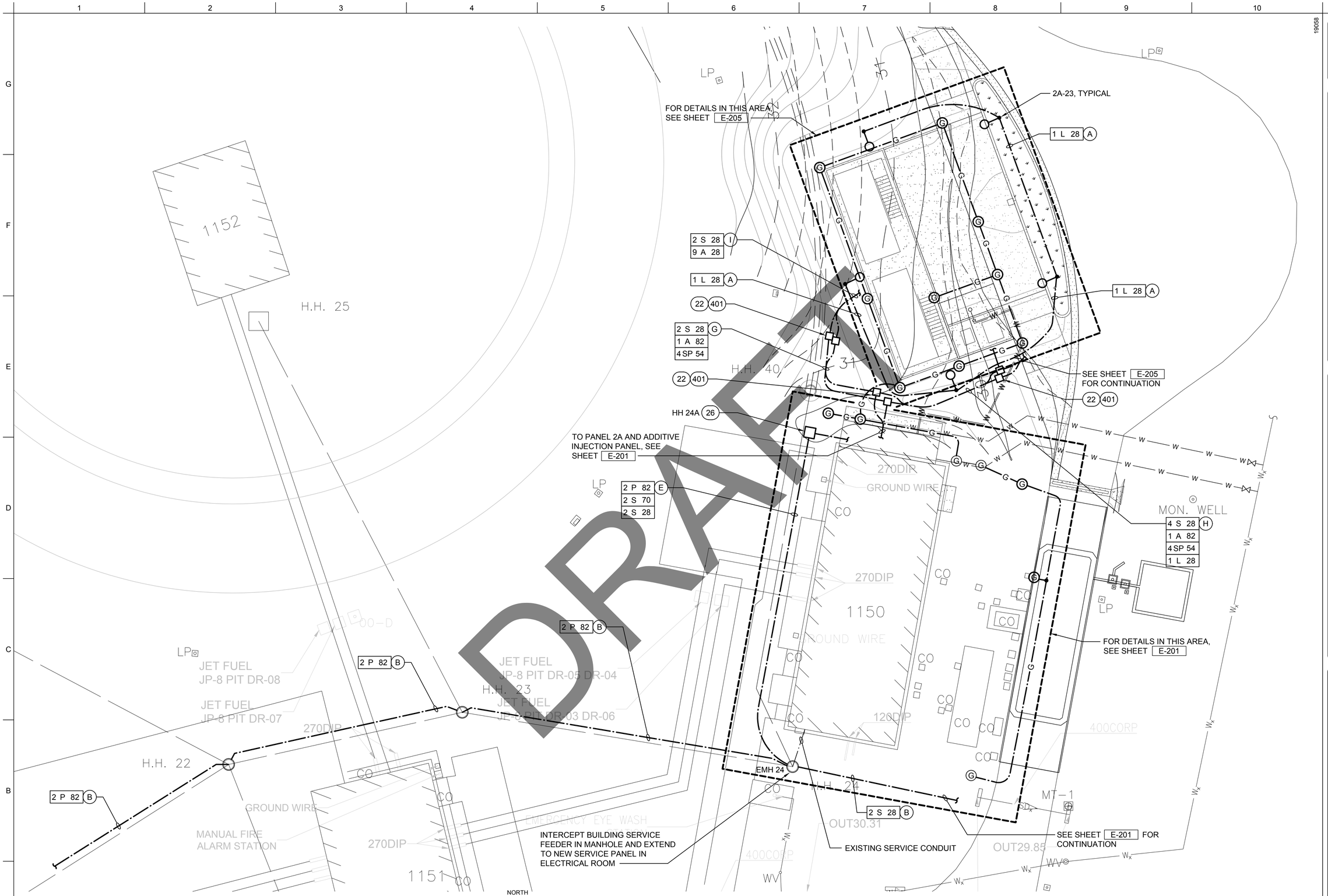

SITE ELECTRICAL PLAN

SCALE: 1:150

NOTES:

1. LIGHT LINES DENOTE EXISTING CONDITION
   BOLD LINES DENOTE NEW WORK
   "X" DENOTES REMOVAL WORK

DRAFT

US Army Corps of Engineers®

MARK	DESCRIPTION	DATE

DESIGNED BY: PKU
DRAWN BY: MKE
CHECKED BY: PKU
SUBMITTED BY: MK ENGINEERS, LTD
SIZE: ISO A1
ISSUE DATE: -
SOLICITATION NO.: -
CONTRACT NO.: W912HV-17-D-0007
DRAWING CODE: -
FILE NAME: DESSC2OUX-E-102.dwg

U.S. ARMY CORPS OF ENGINEERS
JAPAN DISTRICT
APO AP 96343-5010

HDR - WTNA JV
1132 BISHOP STREET
SUITE 1200
HONOLULU, HAWAII 96813

MISAWA AIR BASE, JAPAN
DESC 20UX INSTALL ADDITIVE INJECTION SYSTEM

SITE ELECTRICAL PLAN

SHEET ID
E-102

FILE: DESSC2OUX-E-102.dwg
DATE: 6/25/2018 5:05 PM
OPER:
SCALE:

IF SHEET IS LESS THAN 594 X 841 MM
REDUCED PRINT = USE GRAPHIC SCALES

FINAL

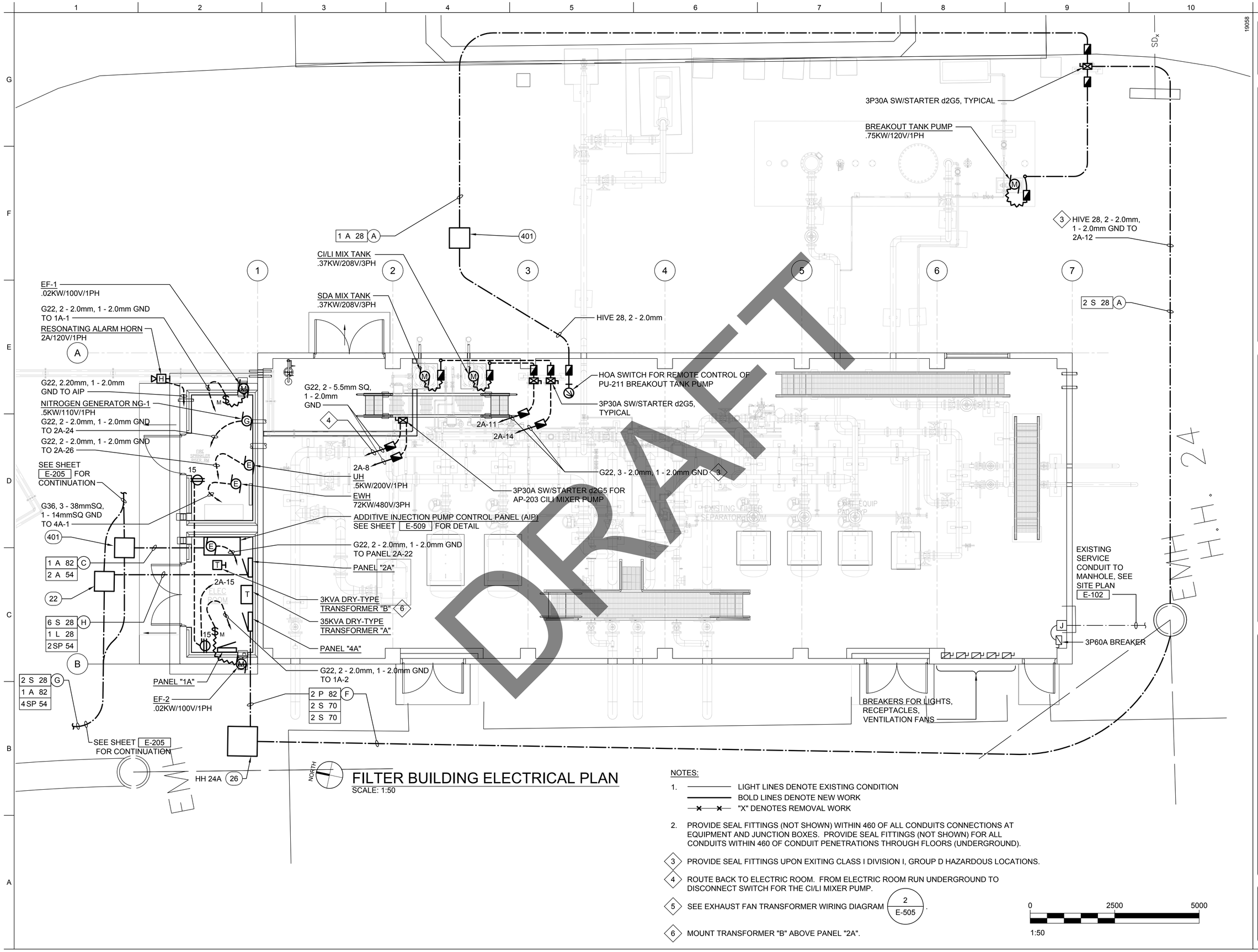

FILTER BUILDING ELECTRICAL PLAN

SCALE: 1:50

NOTES:

1. LIGHT LINES DENOTE EXISTING CONDITION
   BOLD LINES DENOTE NEW WORK
   "X" DENOTES REMOVAL WORK
2. PROVIDE SEAL FITTINGS (NOT SHOWN) WITHIN 460 OF ALL CONDUITS CONNECTIONS AT EQUIPMENT AND JUNCTION BOXES. PROVIDE SEAL FITTINGS (NOT SHOWN) FOR ALL CONDUITS WITHIN 460 OF CONDUIT PENETRATIONS THROUGH FLOORS (UNDERGROUND).

3 PROVIDE SEAL FITTINGS UPON EXITING CLASS I DIVISION I, GROUP D HAZARDOUS LOCATIONS.

4 ROUTE BACK TO ELECTRIC ROOM. FROM ELECTRIC ROOM RUN UNDERGROUND TO DISCONNECT SWITCH FOR THE CI/LI MIXER PUMP.

5 SEE EXHAUST FAN TRANSFORMER WIRING DIAGRAM 2 / E-505.

6 MOUNT TRANSFORMER "B" ABOVE PANEL "2A".

0 2500 5000
1:50

US Army Corps of Engineers®

MARK	DESCRIPTION	DATE

DESIGNED BY: PKU
DRAWN BY: MKE
CHECKED BY: PKU
SUBMITTED BY: MK ENGINEERS, LTD
SIZE: ISO A1
ISSUE DATE: -
SOLICITATION NO.: -
CONTRACT NO.: W912HV-17-D-0007
DRAWING CODE: -
FILE NAME: DESSC2OUX-E-201.dwg

U.S. ARMY CORPS OF ENGINEERS
JAPAN DISTRICT
APO AP 96343-5010

HDR - WTNA JV
1132 BISHOP STREET
SUITE 1200
HONOLULU, HAWAII 96813

MISAWA AIR BASE, JAPAN
DESC 20UX INSTALL ADDITIVE INJECTION SYSTEM

FILTER BUILDING ELECTRICAL PLAN

SHEET ID
E-201

FILE: DESSC2OUX-E-201.dwg
DATE: 6/25/2018 5:05 PM
OPER:
SCALE:

IF SHEET IS LESS THAN 594 X 841 MM
REDUCED PRINT = USE GRAPHIC SCALES

FINAL

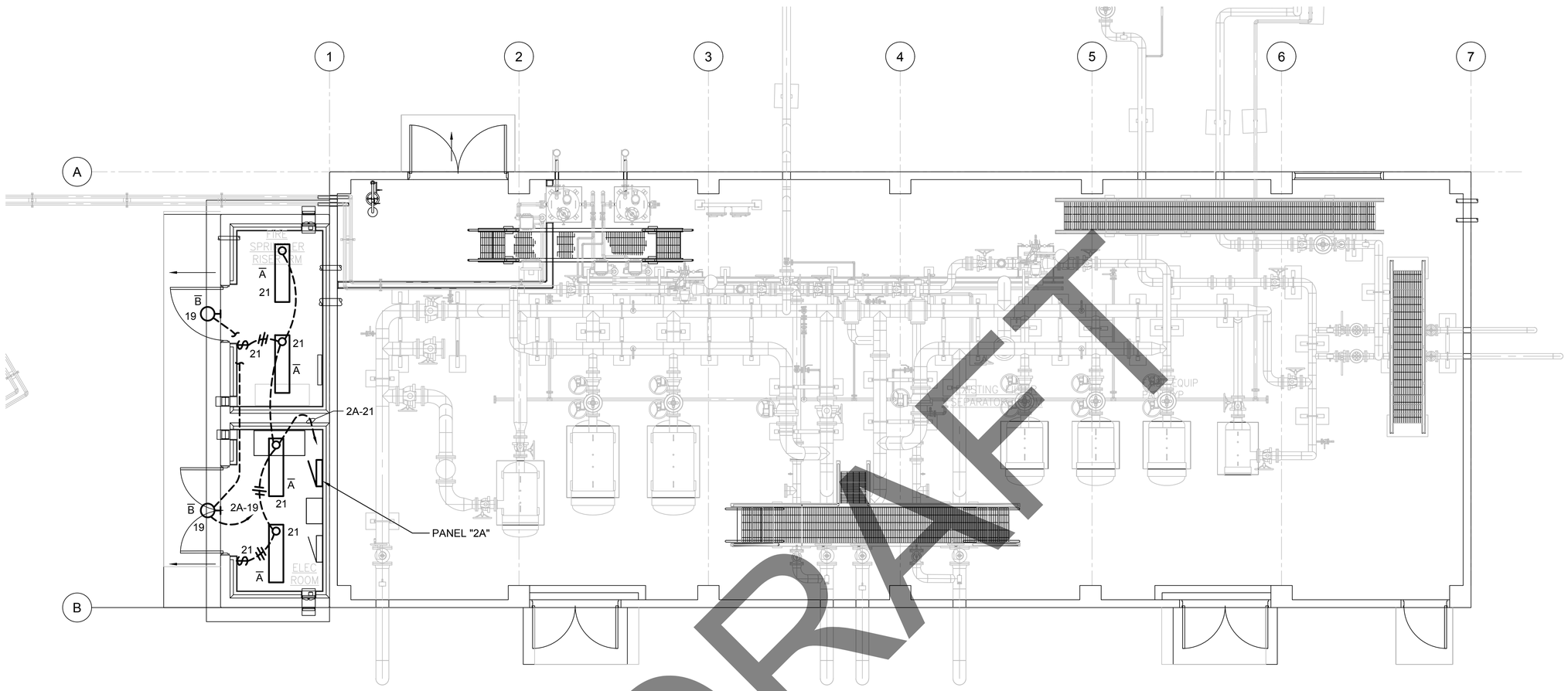

DRAFT

NORTH

FILTER BUILDING LIGHTING PLAN

SCALE: 1:50

NOTES:

1. LIGHT LINES DENOTE EXISTING CONDITION
   BOLD LINES DENOTE NEW WORK
   "X" DENOTES REMOVAL WORK

0 2500 5000
1:50

US Army Corps of Engineers®

MARK	DESCRIPTION	DATE

DESIGNED BY: PKU
DRAWN BY: MWE
CHECKED BY: PKU
SUBMITTED BY: MK ENGINEERS, LTD
SIZE: ISO A1
ISSUE DATE: -
SOLICITATION NO.: -
CONTRACT NO.: W912HV-17-D-0007
DRAWING CODE: -
FILE NAME: DESSC2OUX-E-202.dwg

U.S. ARMY CORPS OF ENGINEERS
JAPAN DISTRICT
APO AP 96343-5010

HDR - WTNA JV
1132 BISHOP STREET
SUITE 1200
HONOLULU, HAWAII 96813

MISAWA AIR BASE, JAPAN
DESC 20UX INSTALL ADDITIVE INJECTION SYSTEM

FILTER BUILDING LIGHTING PLAN

SHEET ID

E-202

FILE: DESSC2OUX-E-202.dwg
DATE: 6/25/2018 5:05 PM
OPER:
SCALE:

IF SHEET IS LESS THAN 594 X 841 MM
REDUCED PRINT = USE GRAPHIC SCALES

FINAL

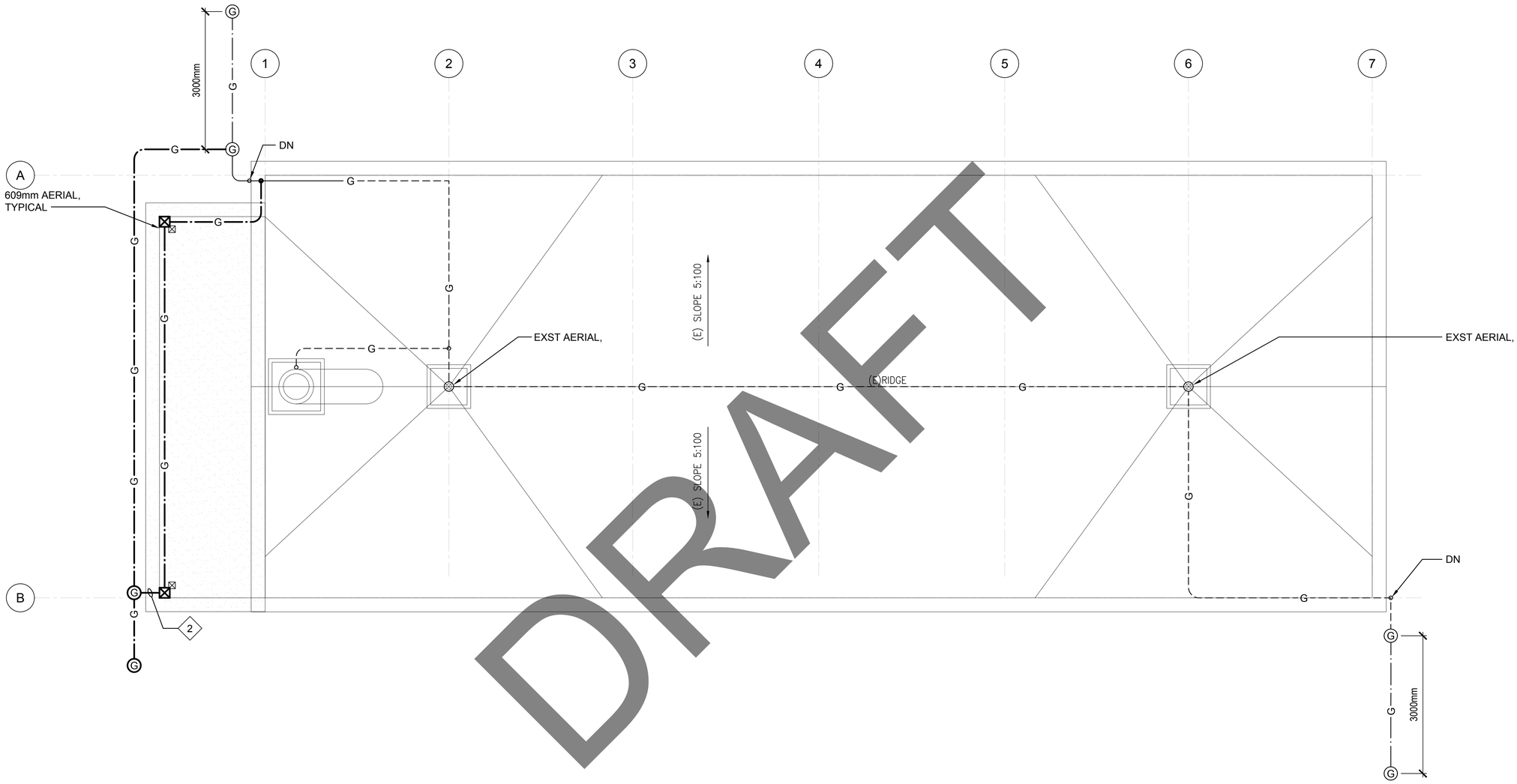

DRAFT

NORTH

FILTER BUILDING LIGHTNING PROTECTION PLAN

SCALE: 1:50

NOTES:

1. LIGHT LINES DENOTE EXISTING CONDITION
   BOLD LINES DENOTE NEW WORK
   "X" DENOTES REMOVAL WORK

2 G28, 60mmSQ CLASS 11 BARE COPPER DOWN TO GROUND RING.

0 2500 5000
1:50

US Army Corps of Engineers®

MARK	DESCRIPTION	DATE

DESIGNED BY: PKU
DRAWN BY: MMS
CHECKED BY: PKU
SUBMITTED BY: MK ENGINEERS, LTD
SIZE: ISO A1
ISSUE DATE: -
SOLICITATION NO.: -
CONTRACT NO.: W912HV-17-D-0007
DRAWING CODE: -
FILE NAME: DESSC2OUX-E-203.dwg

U.S. ARMY CORPS OF ENGINEERS
JAPAN DISTRICT
APO AP 96343-5010

HDR - WTNA JV
1132 BISHOP STREET
SUITE 1200
HONOLULU, HAWAII 96813

MISAWA AIR BASE, JAPAN
DESC 20UX INSTALL ADDITIVE INJECTION SYSTEM

FILTER BUILDING LIGHTNING PROTECTION PLAN

SHEET ID
E-203

FILE: DESSC2OUX-E-203.dwg
DATE: 6/25/2018 5:05 PM
OPER:
SCALE:

IF SHEET IS LESS THAN 594 X 841 MM
REDUCED PRINT = USE GRAPHIC SCALES

FINAL

19058

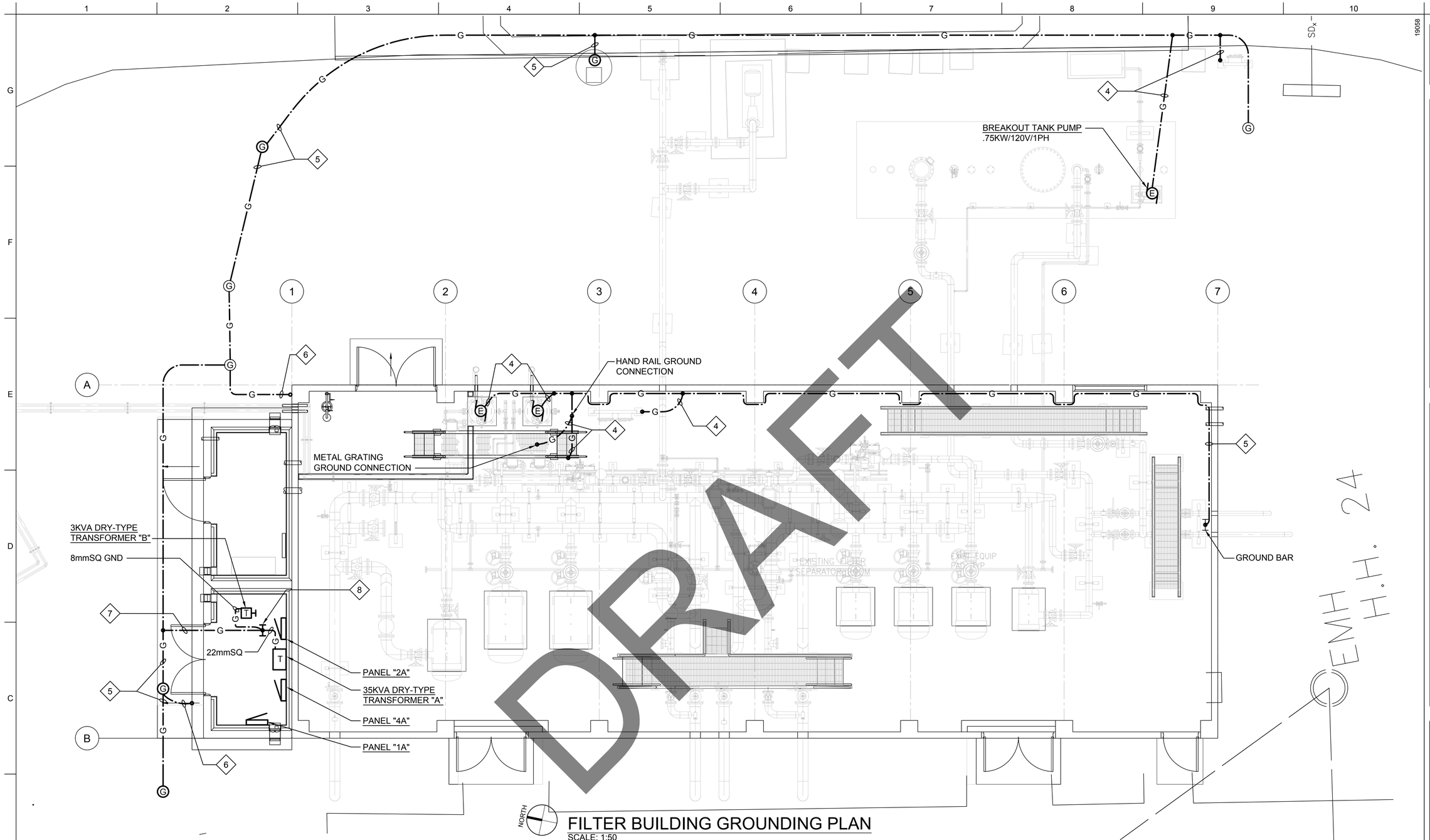

FILTER BUILDING GROUNDING PLAN

SCALE: 1:50

NOTES:

1. LIGHT LINES DENOTE EXISTING CONDITION
   BOLD LINES DENOTE NEW WORK
2. GROUND AND BOND ALL METAL SURFACES, INCLUDING DOORWAYS, STEP, RAILING METALLIC CONDUIT AND/OR PIPES THAT ARE NOT ATTACHED TO A GROUNDED PANEL OR ENCLOSURE MUST BE GROUNDED USING A GROUND BUSHING.

3 PROVIDE 38mm SQ GROUND JUMPER ACROSS ALL FLANGED FUEL LINE FITTINGS (NOT SHOWN).

4 100mm SQ BARE COPPER GROUND.

5 150mm SQ BARE COPPER GROUND, MINIMUM 770mm BELOW FINISHED GRADE.

6 G8, 60mm SQ BARE COPPER UP TO LIGHTNING PROTECTION AIR TERMINALS ON ROOF.

7 22mmSQ BARE COPPER GROUND.

8 PROVIDE GROUND BAR EGB UNDER PANEL 2A, SEE 2/E-505.

0 2500 5000
1:50

US Army Corps of Engineers®

MARK	DESCRIPTION	DATE

DESIGNED BY: PKU
DRAWN BY: MKE
CHECKED BY: PKU
SUBMITTED BY: MK ENGINEERS, LTD
SIZE: ISO A1
ISSUE DATE: -
SOLICITATION NO.: -
CONTRACT NO.: W912HV-17-D-0007
DRAWING CODE: -
FILE NAME: DESSC2OUX-E-204.dwg

U.S. ARMY CORPS OF ENGINEERS
JAPAN DISTRICT
APO AP 96343-5010

HDR - WTNA JV
1132 BISHOP STREET
SUITE 1200
HONOLULU, HAWAII 96813

MISAWA AIR BASE, JAPAN
DESC 20UX INSTALL ADDITIVE INJECTION SYSTEM

FILTER BUILDING GROUNDING PLAN

SHEET ID
E-204

FILE: DESSC2OUX-E-204.dwg
DATE: 6/25/2018 5:05 PM
OPER:
SCALE:

IF SHEET IS LESS THAN 594 X 841 MM
REDUCED PRINT = USE GRAPHIC SCALES

FINAL

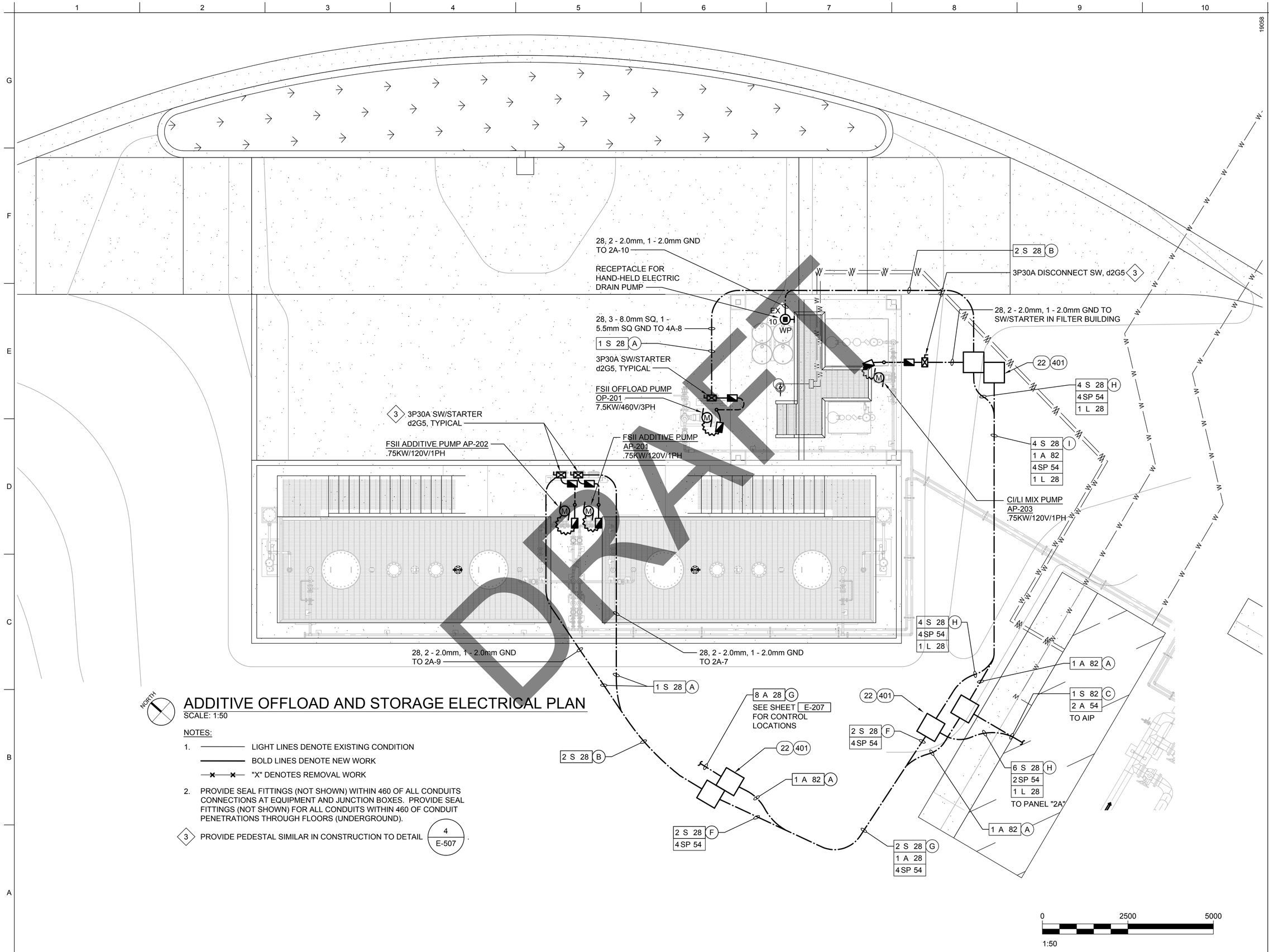

ADDITIVE OFFLOAD AND STORAGE ELECTRICAL PLAN

SCALE: 1:50

NOTES:

1. LIGHT LINES DENOTE EXISTING CONDITION
   BOLD LINES DENOTE NEW WORK
   "X" DENOTES REMOVAL WORK
2. PROVIDE SEAL FITTINGS (NOT SHOWN) WITHIN 460 OF ALL CONDUITS CONNECTIONS AT EQUIPMENT AND JUNCTION BOXES. PROVIDE SEAL FITTINGS (NOT SHOWN) FOR ALL CONDUITS WITHIN 460 OF CONDUIT PENETRATIONS THROUGH FLOORS (UNDERGROUND).

3 PROVIDE PEDESTAL SIMILAR IN CONSTRUCTION TO DETAIL 4 / E-507.

DRAFT

US Army Corps of Engineers®

MARK	DESCRIPTION	DATE

DESIGNED BY: PKU
DRAWN BY: MKE
CHECKED BY: PKU
SUBMITTED BY: MK ENGINEERS, LTD
SIZE: ISO A1
ISSUE DATE: -
SOLICITATION NO.: -
CONTRACT NO.: W912HV-17-D-0007
DRAWING CODE: -
FILE NAME: DESSC2OUX-E-205.dwg

U.S. ARMY CORPS OF ENGINEERS
JAPAN DISTRICT
APO AP 96343-5010

HDR - WTNA JV
1132 BISHOP STREET
SUITE 1200
HONOLULU, HAWAII 96813

MISAWA AIR BASE, JAPAN
DESC 20UX INSTALL ADDITIVE INJECTION SYSTEM

ADDITIVE OFFLOAD AND STORAGE ELECTRICAL PLAN

SHEET ID

E-205

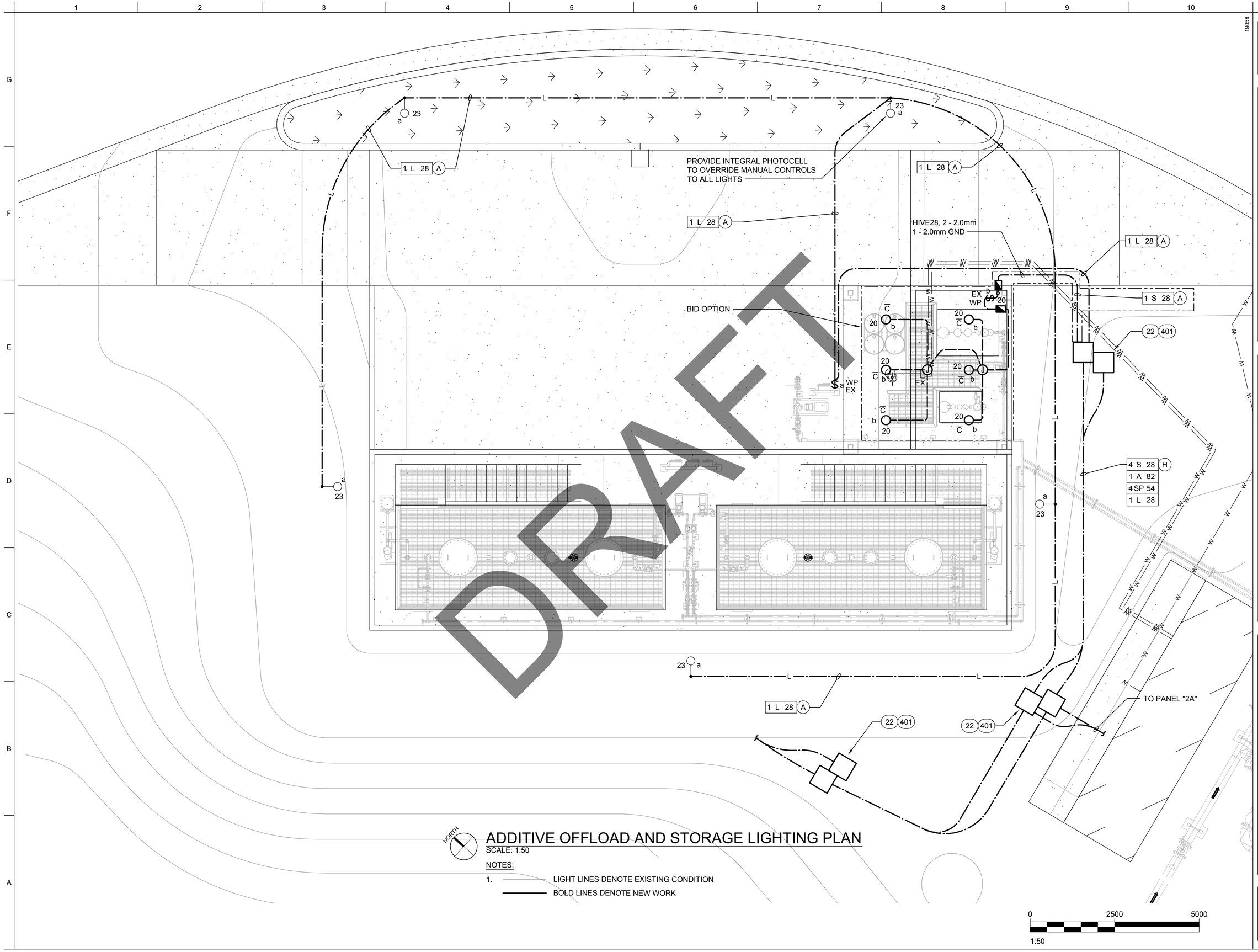

ADDITIVE OFFLOAD AND STORAGE LIGHTING PLAN

SCALE: 1:50

NOTES:

1. LIGHT LINES DENOTE EXISTING CONDITION
   BOLD LINES DENOTE NEW WORK

US Army Corps of Engineers®

MARK	DESCRIPTION	DATE

ISSUE DATE: -
SOLICITATION NO.: -
CONTRACT NO.: W912HV-17-D-0007
DRAWING CODE: -
DESIGNED BY: PKU
DRAWN BY: MKE
CHECKED BY: PKU
SUBMITTED BY: MK ENGINEERS, LTD
SIZE: ISO A1
FILE NAME: DESSC2OUX-E-206.dwg

U.S. ARMY CORPS OF ENGINEERS
JAPAN DISTRICT
APO AP 96343-5010

HDR - WTNA JV
1132 BISHOP STREET
SUITE 1200
HONOLULU, HAWAII 96813

MISAWA AIR BASE, JAPAN
DESC 20UX INSTALL ADDITIVE INJECTION SYSTEM

ADDITIVE OFFLOAD AND STORAGE LIGHTING PLAN

SHEET ID

E-206

FILE: DESSC2OUX-E-206.dwg
DATE: 6/25/2018 5:05 PM
OPER:
SCALE:

IF SHEET IS LESS THAN 594 X 841 MM
REDUCED PRINT = USE GRAPHIC SCALES

FINAL

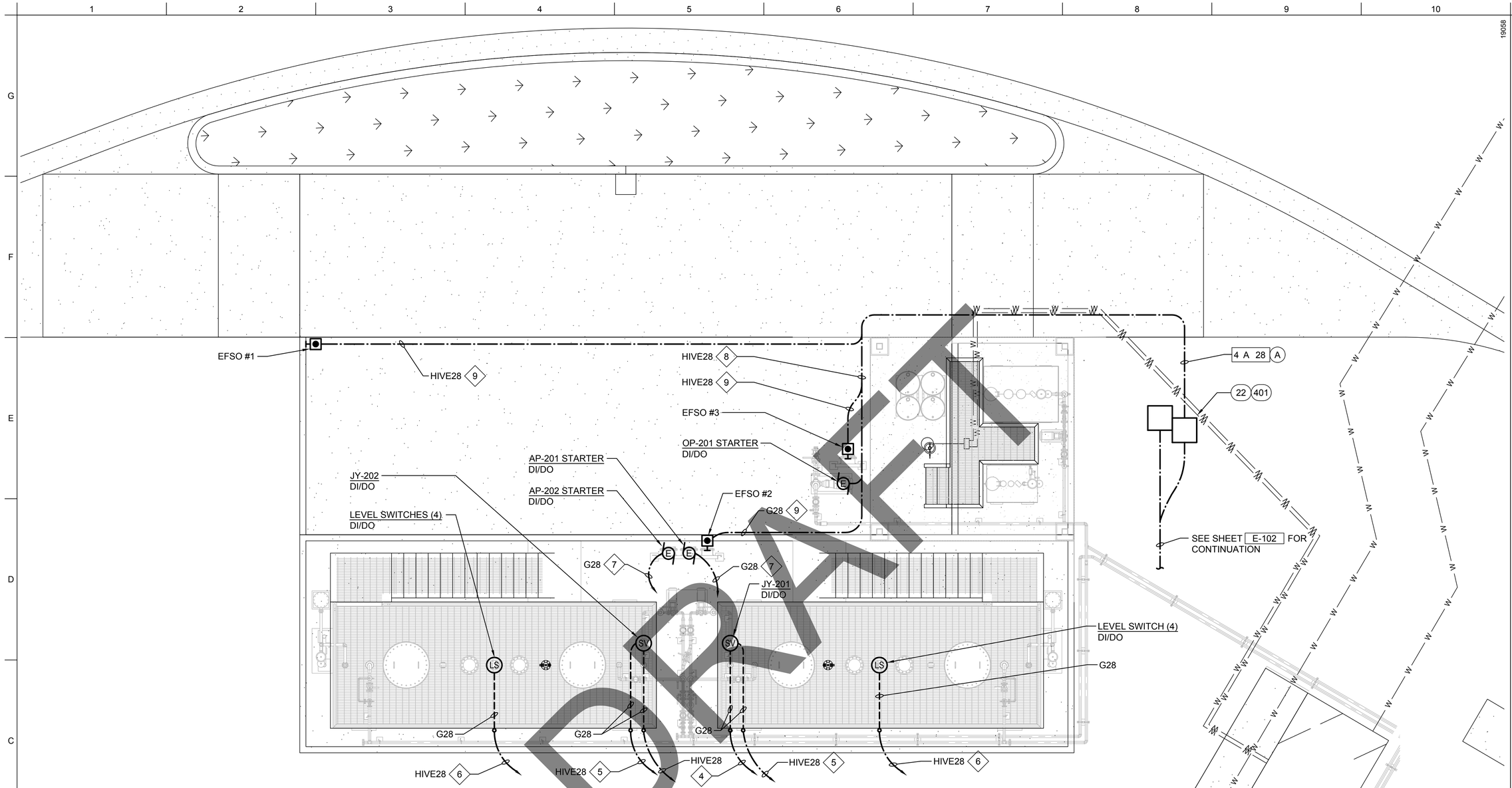

NORTH

ADDITIVE OFFLOAD AND STORAGE MECHANICAL CONNECTION PLAN

SCALE: 1:50

NOTES:

1. LIGHT LINES DENOTE EXISTING CONDITION
   BOLD LINES DENOTE NEW WORK
   "X" DENOTES REMOVAL WORK
2. PROVIDE SEAL FITTINGS (NOT SHOWN) FOR ALL CONDUITS AT EQUIPMENT CONNECTIONS.
3. PROVIDE SEAL FITTINGS (NOT SHOWN) FOR ALL CONDUITS BELOW ADDITIVE INJECTION PANEL (AIP) AT +460 ABOVE FINISH GRADE/PAVEMENT.

4. 3 - 2.0mm (SOLENOID VALVE POWER/CONTROL) TO ADDITIVE INJECTION CONTROL PANEL VIA CONTROL PULLBOXES.

5. 2 - 2.0mm, 2.0mm GND TO ADDITIVE INJECTION PANEL (SOLENOID VALVE POWER) VIA CONTROL PULLBOXES.

6. 3 - 4/C 1.6mm (LEVEL SWITCHES) TO ADDITIVE INJECTION CONTROL PANEL VIA CONTROL PULLBOXES.

7. 2 - 4/C 1.6mm PUMP START/STOP TO ADDITIVE INJECTION CONTROL PANEL VIA PULLBOXES.

8. 2 - 4/C 1.6mm (OP-201 EMER. STOP/FSII TANK "HIGH-HIGH" LEVEL) TO ADDITIVE INJECTION CONTROL PANEL VIA CONTROL PULLBOXES.

9. 4/C 1.6mm (DI/DO) TO ADDITIVE INJECTION CONTROL PANEL VIA CONTROL PULLBOXES.

0 2500 5000
1:50

US Army Corps of Engineers®

MARK	DESCRIPTION	DATE

ISSUE DATE: -
SOLICITATION NO.: -
CONTRACT NO.: W912HV-17-D-0007
DRAWING CODE: -
DESIGNED BY: PKU
DRAWN BY: MWE
CHECKED BY: PKU
SUBMITTED BY: MK ENGINEERS, LTD
SIZE: ISO A1
FILE NAME: DESSC2OUX-E-207.dwg

U.S. ARMY CORPS OF ENGINEERS
JAPAN DISTRICT
APO AP 96343-5010

HDR - WTNA JV
1132 BISHOP STREET
SUITE 1200
HONOLULU, HAWAII 96813

MISAWA AIR BASE, JAPAN
DESC 20UX INSTALL ADDITIVE INJECTION SYSTEM

ADDITIVE OFFLOAD AND STORAGE MECHANICAL CONNECTION PLAN

SHEET ID
E-207

FILE: DESSC2OUX-E-207.dwg
DATE: 6/25/2018 5:05 PM
OPER:
SCALE:

IF SHEET IS LESS THAN 594 X 841 MM
REDUCED PRINT = USE GRAPHIC SCALES

FINAL

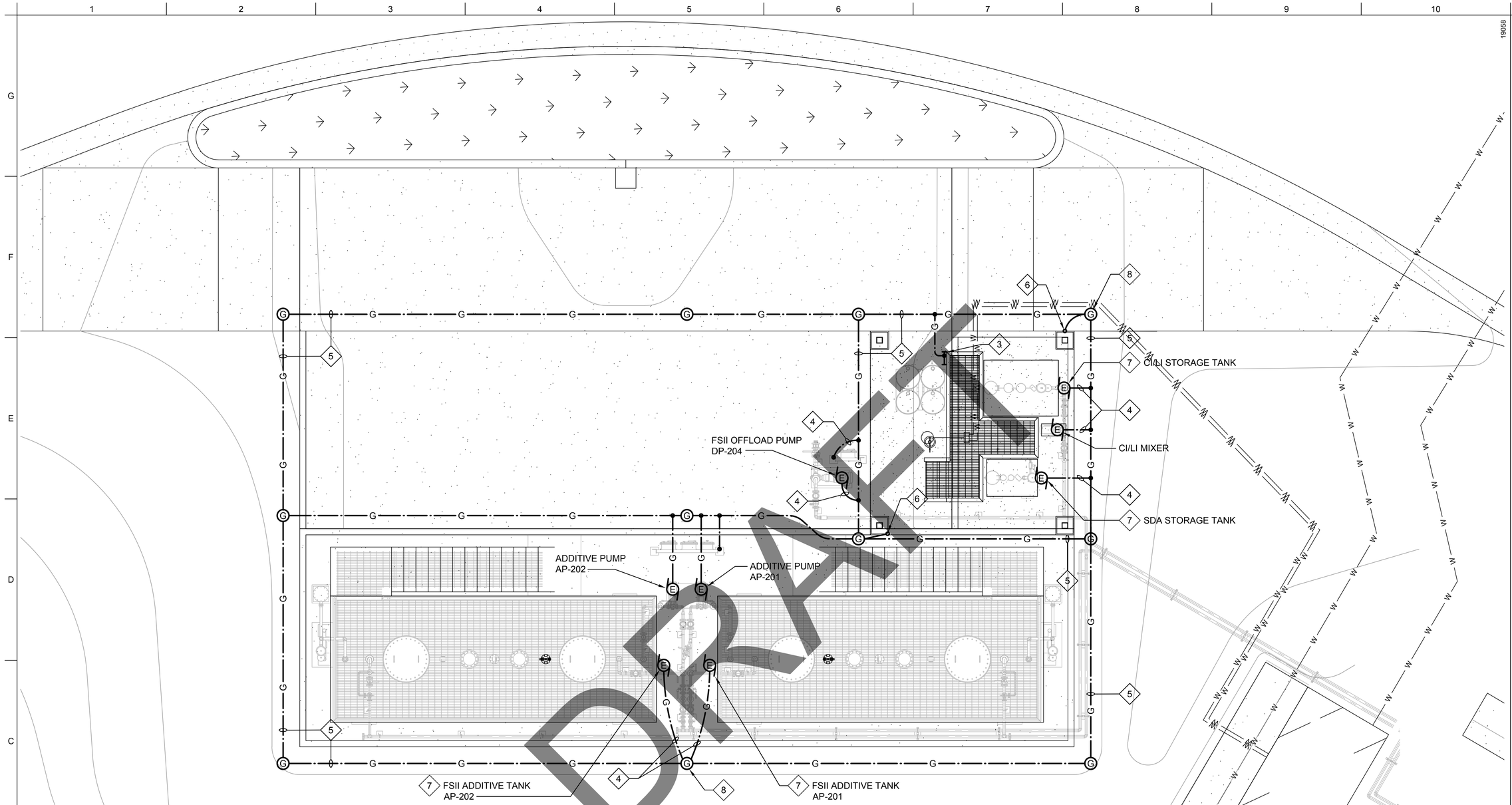

NORTH

ADDITIVE OFFLOAD AND STORAGE GROUNDING PLAN

SCALE: 1:50

NOTES:

1. LIGHT LINES DENOTE EXISTING CONDITION
   BOLD LINES DENOTE NEW WORK
2. PROVIDE 38mm SQ GROUND JUMPER ACROSS ALL FLANGED FUEL LINE FITTINGS (NOT SHOWN).

3 PROVIDE GROUNDING BUS FOR DRUMS.

4 100mm SQ BARE COPPER GROUND.

5 150mm SQ BARE COPPER GROUND, MINIMUM 770mm BELOW FINISHED GRADE.

6 G28, 60mm SQ BARE COPPER UP TO LIGHTNING PROTECTION AIR TERMINALS ON ROOF.

7 VERIFY GROUNDING POINT OF TANKS PER MANUFACTURER INSTRUCTIONS.

8 GROUND WELL, SEE DETAIL 1 / E-508.

0 2500 5000
1:50

US Army Corps of Engineers®

MARK	DESCRIPTION	DATE

DESIGNED BY: PKU
DRAWN BY: MKE
CHECKED BY: PKU
SUBMITTED BY: MK ENGINEERS, LTD
SIZE: ISO A1
ISSUE DATE: -
SOLICITATION NO.: -
CONTRACT NO.: W912HV-17-D-0007
DRAWING CODE: -
FILE NAME: DESSC2OUX-E-208.dwg

U.S. ARMY CORPS OF ENGINEERS
JAPAN DISTRICT
APO AP 96343-5010

HDR - WTNA JV
1132 BISHOP STREET
SUITE 1200
HONOLULU, HAWAII 96813

MISAWA AIR BASE, JAPAN
DESC 20UX INSTALL ADDITIVE INJECTION SYSTEM

ADDITIVE OFFLOAD AND STORAGE GROUNDING PLAN

SHEET ID
E-208

FILE: DESSC2OUX-E-208.dwg
DATE: 6/25/2018 5:05 PM
OPER:
SCALE:

IF SHEET IS LESS THAN 594 X 841 MM
REDUCED PRINT = USE GRAPHIC SCALES

FINAL

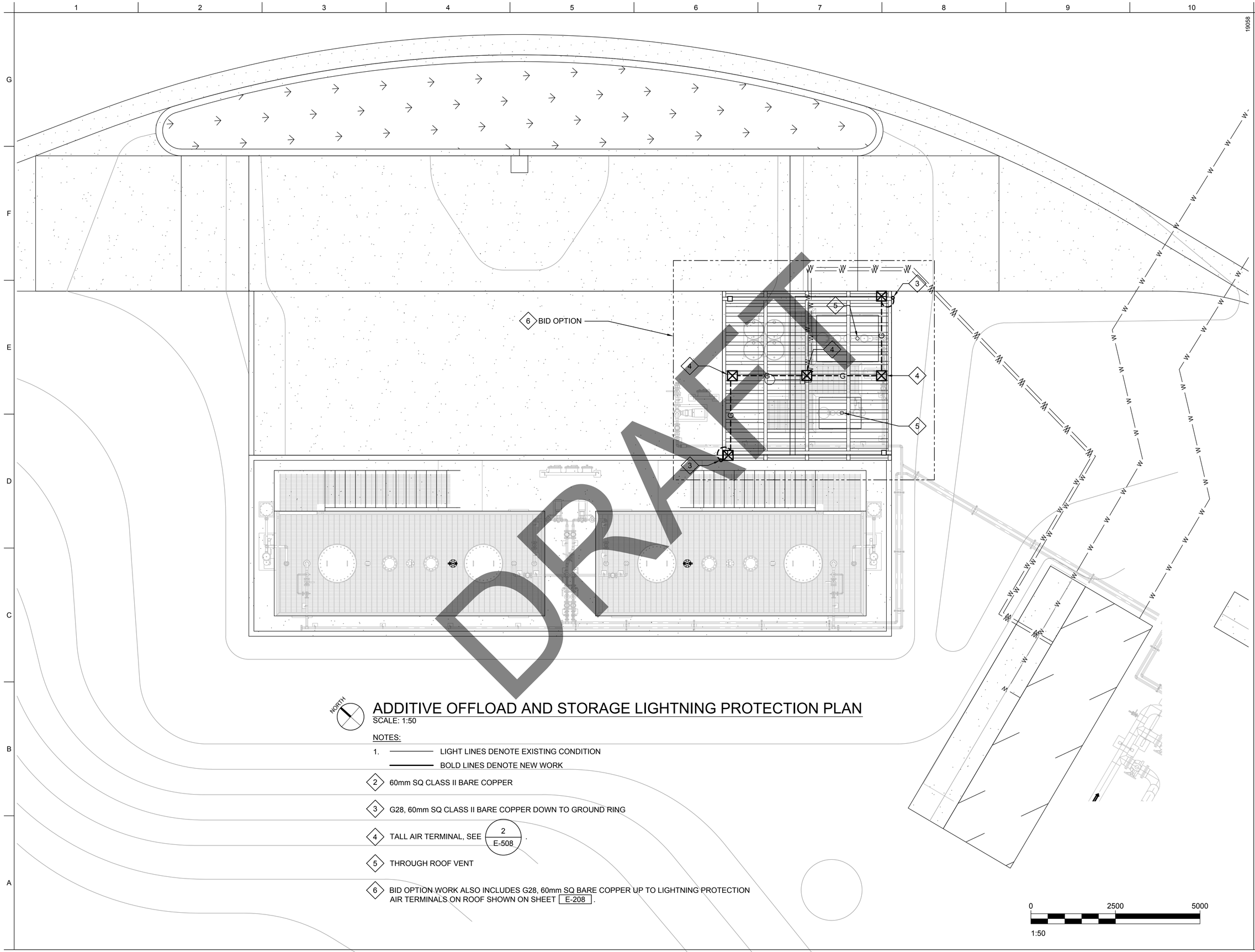

ADDITIVE OFFLOAD AND STORAGE LIGHTNING PROTECTION PLAN

SCALE: 1:50

NOTES:

1. LIGHT LINES DENOTE EXISTING CONDITION
   BOLD LINES DENOTE NEW WORK

2. 60mm SQ CLASS II BARE COPPER

3. G28, 60mm SQ CLASS II BARE COPPER DOWN TO GROUND RING

4. TALL AIR TERMINAL, SEE 2 / E-508 .

5. THROUGH ROOF VENT

6. BID OPTION WORK ALSO INCLUDES G28, 60mm SQ BARE COPPER UP TO LIGHTNING PROTECTION AIR TERMINALS ON ROOF SHOWN ON SHEET E-208 .

DRAFT

US Army Corps of Engineers®

MARK	DESCRIPTION	DATE

DESIGNED BY: PKU
DRAWN BY: MKE
CHECKED BY: PKU
SUBMITTED BY: MK ENGINEERS, LTD
SIZE: ISO A1
ISSUE DATE: -
SOLICITATION NO.: -
CONTRACT NO.: W912HV-17-D-0007
DRAWING CODE: -
FILE NAME: DESSC2OUX-E-209.dwg

U.S. ARMY CORPS OF ENGINEERS
JAPAN DISTRICT
APO AP 96343-5010

HDR - WTNA JV
1132 BISHOP STREET
SUITE 1200
HONOLULU, HAWAII 96813

MISAWA AIR BASE, JAPAN
DESC 20UX INSTALL ADDITIVE INJECTION SYSTEM

ADDITIVE OFFLOAD AND STORAGE LIGHTNING PROTECTION PLAN

SHEET ID
E-209

FILE: DESSC2OUX-E-209.dwg
DATE: 6/25/2018 5:05 PM
OPER:
SCALE:

IF SHEET IS LESS THAN 594 X 841 MM
REDUCED PRINT = USE GRAPHIC SCALES

FINAL

C:\Users\tlay\MK Engineers\W (CAD) - General\01_PROJECTS\20195\19058_Misawa_InstAdditiveInjSys\01_DwgSheets\DESSC2OUX-E-209.dwg, Layout1, 11/24/2021 9:54:54 AM, tlay, 1:1

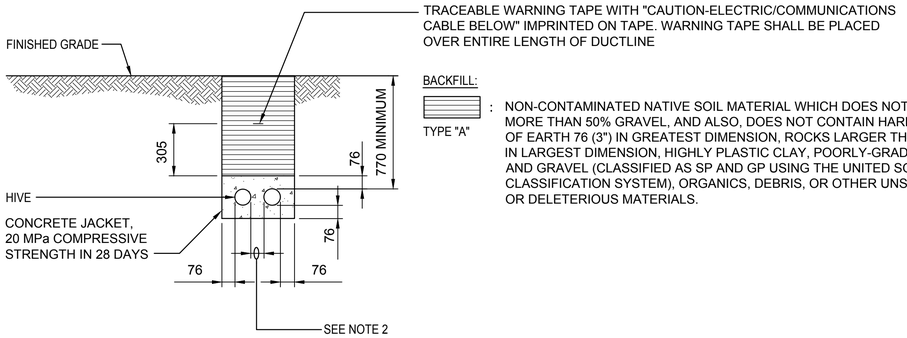

1 TYPICAL DUCT SECTION (CONCRETE ENCASED)

NOT TO SCALE

NOTES:

1. ELECTRICAL AND TELEPHONE DUCTS SIMILAR.
2. PROVIDE 51 SEPARATION BETWEEN DUCTS OF SAME SYSTEM AND 76 BETWEEN DUCTS OF DIFFERENT SYSTEMS.
3. WHERE TRENCH ENCOUNTERS EXISTING CONCRETE OR ASPHALT CONCRETE, SURFACE SHALL BE SAWCUT. BACKFILL, COMPACT AND PATCH SURFACE TO MATCH ADJACENT AREA. SEE TRENCH RESTORATION DETAIL.
4. SEE DUCT SECTION DETAILS FOR CONDUIT ARRANGEMENT.

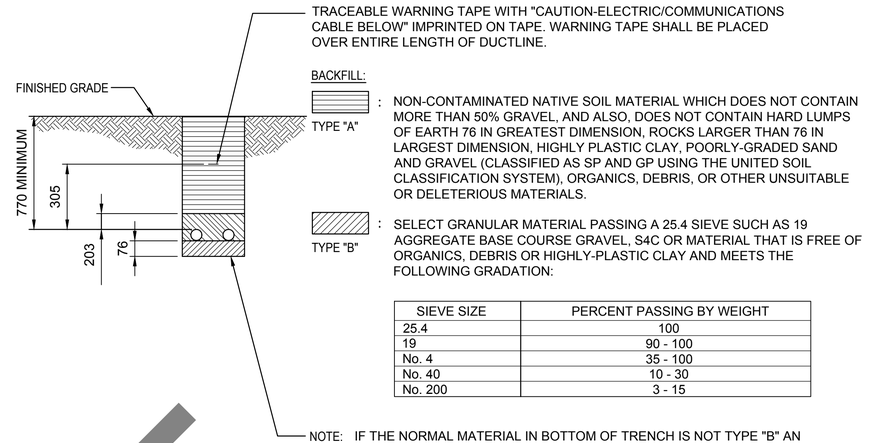

SIEVE SIZE	PERCENT PASSING BY WEIGHT
25.4	100
19	90 - 100
No. 4	35 - 100
No. 40	10 - 30
No. 200	3 - 15

2 TYPICAL DUCT SECTION (DIRECT BURIED)

NOT TO SCALE

NOTES:

1. DIRECT BURY ALL BARE COPPER GROUND WIRES.
2. WHERE TRENCH ENCOUNTERS EXISTING CONCRETE OR ASPHALT CONCRETE, SURFACE SHALL BE SAWCUT. BACKFILL, COMPACT AND PATCH SURFACE TO MATCH ADJACENT AREA. SEE TRENCH RESTORATION DETAIL.
3. PROVIDE 76 SEPARATION BETWEEN DUCTS OF SAME SYSTEM AND 305 SEPARATION BETWEEN ELECTRICAL DUCTS AND DUCTS OF DIFFERENT SYSTEMS.

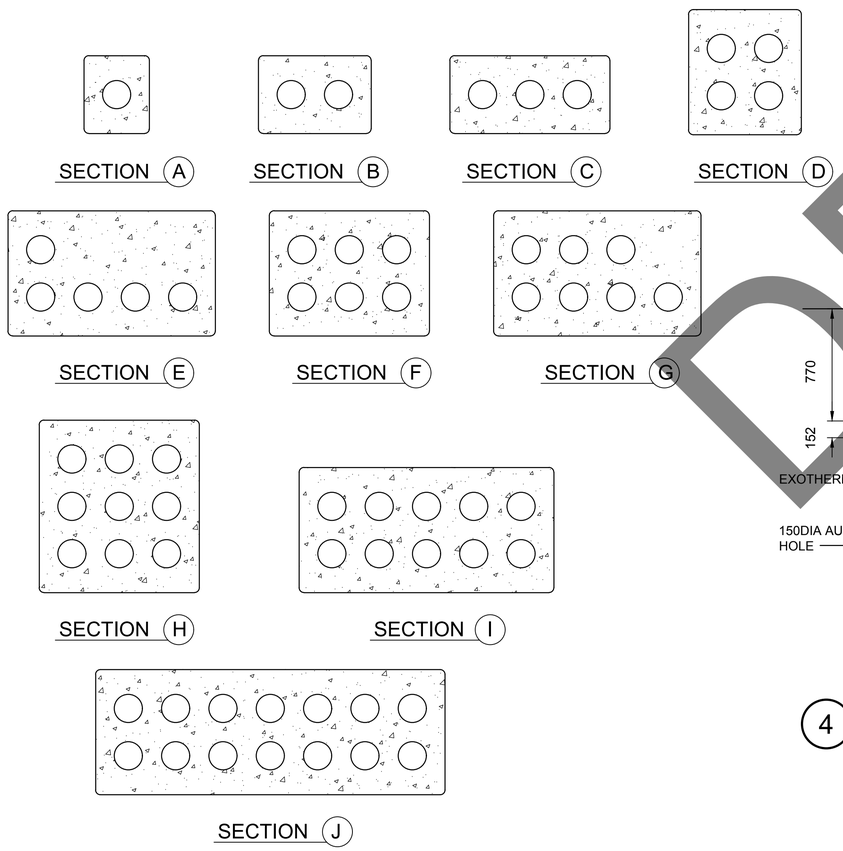

3 TYPICAL DUCTLINE SECTION

NOT TO SCALE

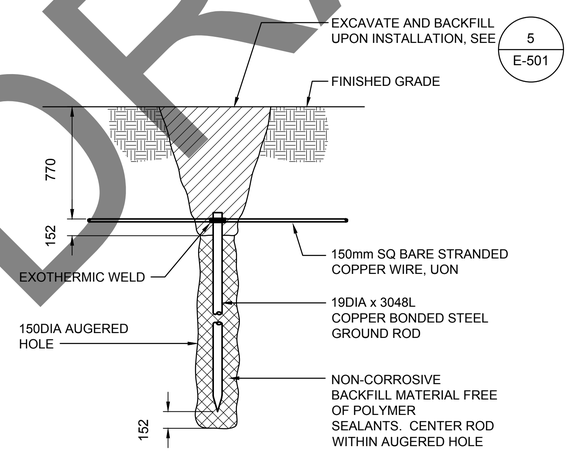

4 GROUND WIRE DETAIL

NOT TO SCALE

NOTES:

1. WHERE TRENCH ENCOUNTERS EXISTING CONCRETE OR ASPHALT CONCRETE, SURFACE SHALL BE SAWCUT. BACKFILL, COMPACT AND PATCH SURFACE TO MATCH ADJACENT AREA. SEE TRENCH RESTORATION DETAIL.

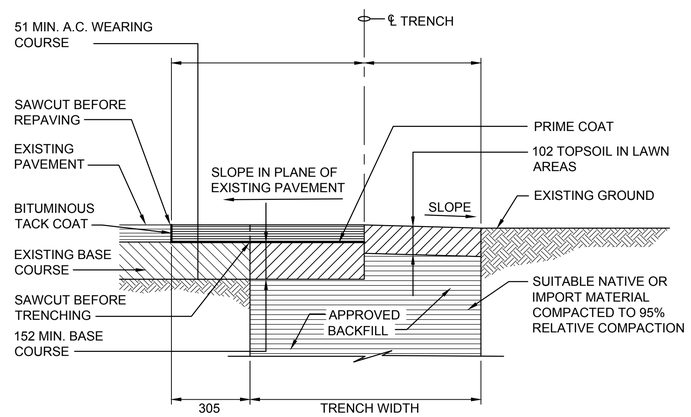

5 TRENCH RESTORATION DETAIL

NOT TO SCALE

DRAFT

US Army Corps of Engineers®

MARK	DESCRIPTION	DATE

DESIGNED BY: PKU
DRAWN BY: MKE
CHECKED BY: PKU
SUBMITTED BY: MK ENGINEERS, LTD
SIZE: ISO A1
ISSUE DATE: -
SOLICITATION NO.: -
CONTRACT NO.: W912HV-17-D-0007
DRAWING CODE: -
FILE NAME: DESSC2OUX-E-501.dwg

U.S. ARMY CORPS OF ENGINEERS
JAPAN DISTRICT
APO AP 96343-5010

HDR - WTNA JV
1132 BISHOP STREET
SUITE 1200
HONOLULU, HAWAII 96813

MISAWA AIR BASE, JAPAN
DESC 20UX INSTALL ADDITIVE INJECTION SYSTEM

DUCT SECTION DETAILS

SHEET ID
E-501

FILE: DESSC2OUX-E-501.dwg
DATE: 6/25/2018 5:05 PM
OPER:
SCALE:

IF SHEET IS LESS THAN 594 X 841 MM
REDUCED PRINT = USE GRAPHIC SCALES

FINAL

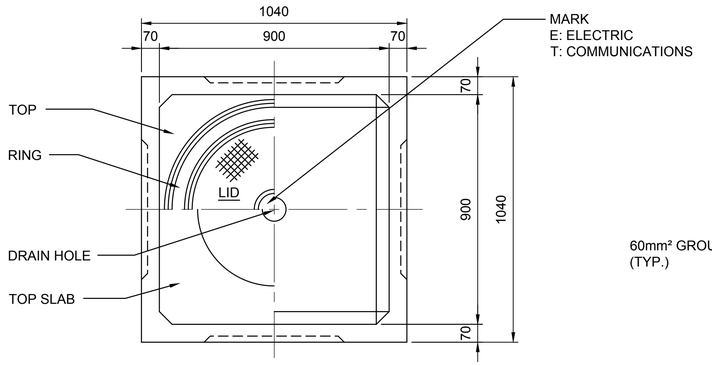

HANDHOLE SECTION

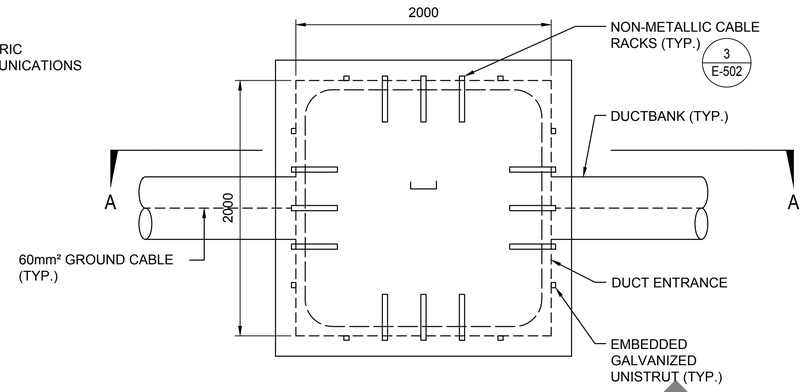

PLAN

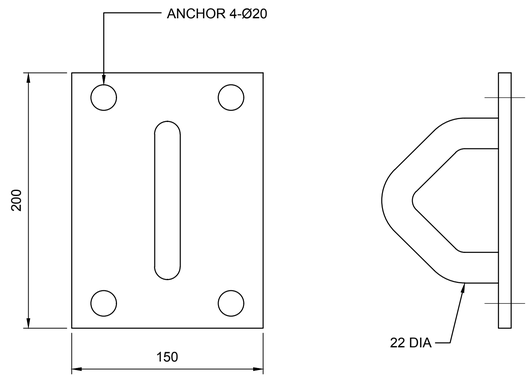

2 PULLING IRON DETAIL
NOT TO SCALE

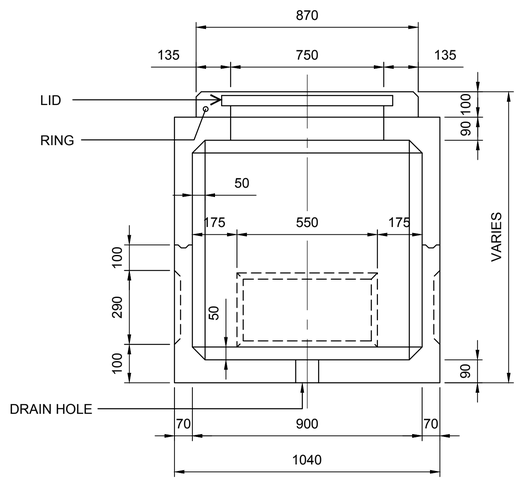

HANDHOLE SECTION

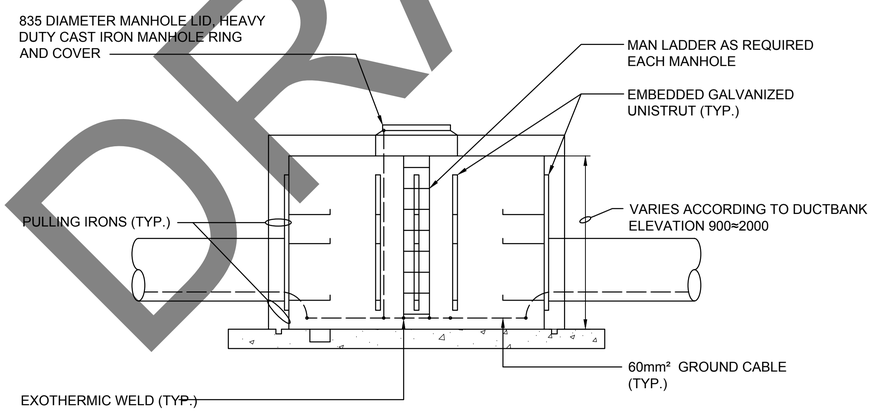

SECTION "A-A"

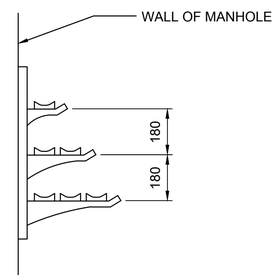

1 HANDHOLE DETAILS
NOT TO SCALE

3 TYPICAL CABLE RACK DETAIL
NOT TO SCALE

DRAFT

US Army Corps of Engineers®

MARK	DESCRIPTION	DATE

DESIGNED BY: BM/AKAIAU
DRAWN BY: MS
CHECKED BY: PM/YEDA
SUBMITTED BY: PM/YEDA
SIZE: ISO A1
ISSUE DATE: -
SOLICITATION NO.: -
CONTRACT NO.: W912HV-17-D-0007
DRAWING CODE: -
FILE NAME: DESSC2OUX-E-502.dwg

U.S. ARMY CORPS OF ENGINEERS
JAPAN DISTRICT
APO AP 96343-5010

HDR - WTNA JV
1132 BISHOP STREET
SUITE 1200
HONOLULU, HAWAII 96813

DESC 2OUX
INSTALL ADDITIVE INJECTION SYSTEM
MISAWA AIR BASE, JAPAN

HANDHOLE DETAILS

SHEET ID
E-502

FILE: DESSC2OUX-E-502.dwg
DATE: 6/25/2018 5:05 PM
OPER:
SCALE:

IF SHEET IS LESS THAN 594 X 841 MM
REDUCED PRINT = USE GRAPHIC SCALES

100%

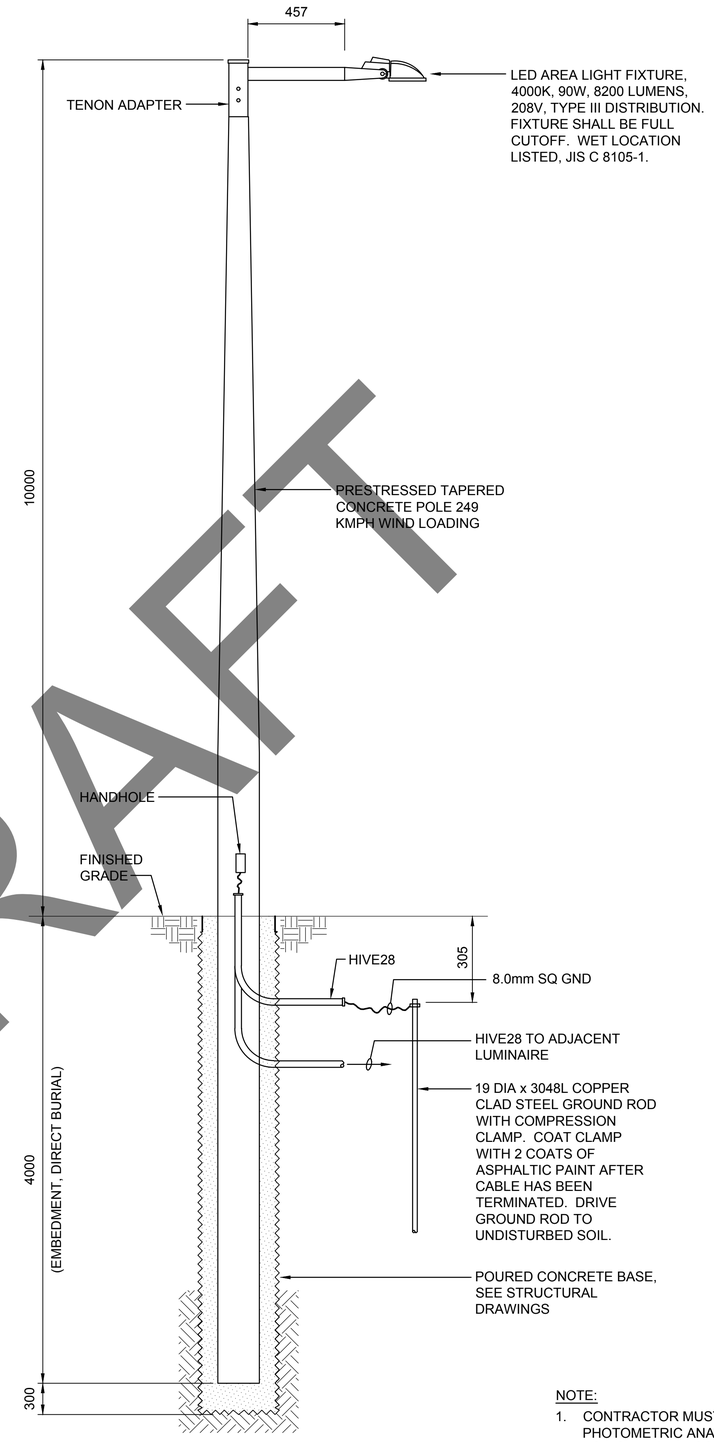

1 AREA LIGHT MOUNTING DETAIL
NOT TO SCALE

NOTE:

1. CONTRACTOR MUST PROVIDE COMPUTER GENERATED PHOTOMETRIC ANALYSIS OF THE ROADWAY LUMINAIRE AND LAYOUT USING A LIGHT LOSS FACTOR OF 0.7. HORIZONTAL ILLUMINANCE MEASUREMENTS AT FINISHED GRADE MUST BE TAKEN AT A MAXIMUM OF EVERY 3048 ON CENTER. PHOTOMETRIC ANALYSIS MUST INCLUDE MINIMUM FOOTCANDLES, MAXIMUM FOOTCANDLES, AVERAGE MAINTAINED FOOTCANDLES, MAXIMUM TO MINIMUM RATIO, AND AVERAGE TO MINIMUM RATIO. LUMINAIRE MUST BE MOUNTED 10M ABOVE FINISHED GRADE.
   ROADWAY LIGHTING CRITERIA (ILLUMINANCE)
   ILLUMINANCE (AVG) = 0.8 FOOTCANDLES
   ILLUMINANCE (AVG) / ILLUMINANCE (MIN) - 6.0 UNIFORMITY

DRAFT

19058

US Army Corps of Engineers®

MARK	DESCRIPTION	DATE

DESIGNED BY: BMA/KAJIAU
DRAWN BY: MKS
CHECKED BY: PMU/YEDA
SUBMITTED BY: HDR ENGINEERS, LTD
SIZE: ISO A1
ISSUE DATE: -
SOLICITATION NO.: -
CONTRACT NO.: W912HV-17-D-0007
DRAWING CODE: -
FILE NAME: DESSC2OUX-E-503.dwg

U.S. ARMY CORPS OF ENGINEERS
JAPAN DISTRICT
APO AP 96343-5010

HDR - WTNA JV
1132 BISHOP STREET
SUITE 1200
HONOLULU, HAWAII 96813

DESC 20UX
INSTALL ADDITIVE INJECTION SYSTEM
MISAWA AIR BASE, JAPAN

AREA LIGHT MOUNTING DETAILS

SHEET ID
E-503

FILE: DESSC2OUX-E-503.dwg
DATE: 6/25/2018 5:05 PM
OPER:
SCALE:

IF SHEET IS LESS THAN 594 X 841 MM
REDUCED PRINT = USE GRAPHIC SCALES

100%

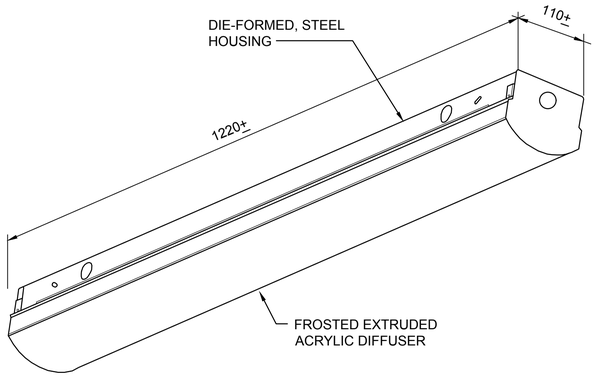

TYPE	A
MOUNT	SURFACE MOUNT
HOUSING	DIE-FORMED, STEEL HOUSING, TEXTURED MATTE WHITE POLYESTER TGIC POWDER COAT BONDED TO PHOSPHATE FREE, MULTI-STAGE PRETREATED METAL, PAINTED AFTER FABRICATION
LENS	FROSTED EXTRUDED ACRYLIC LENS
LIGHT SOURCE	SOLID STATE LEDS, 3500K, 50K HOURS RATED LIFE AT L70, 80 CRI MINIMUM
LUMEN OUTPUT	31.9W, 5100 LUMENS
DRIVER	100V-277V, FIXED OUTPUT DRIVER
LISTINGS	JIS C 8105-1, DAMP LOCATION

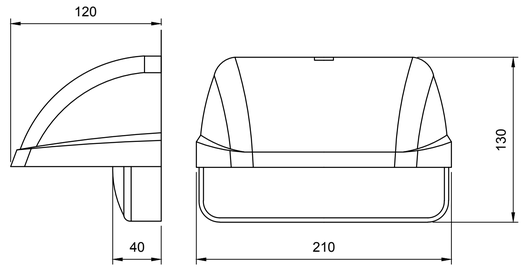

TYPE	B
MOUNT	SURFACE WALL MOUNTED
HOUSING	DIE-CAST ALUMINUM
LENS	FULL CUT-OFF, DISTRIBUTION TYPE III
LIGHT SOURCE	SOLID STATE LEDS, 4000K, 50K HOURS RATED LIFE AT L90, 70 CRI MINIMUM
LUMEN OUTPUT	13W, 1052 LUMENS
DRIVER	100-277V, FIXED OUTPUT DRIVER
LISTINGS	JIS C 8105-1, WET LOCATION

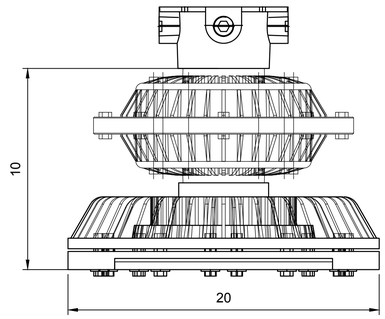

TYPE	C
MOUNT	PENDANT STAN MOUNTED 2700 TO BOTTOM
HOUSING	DIE-CAST ALUMINUM, CLASS 1, DIVISION 1, GROUP D HAZARDOUS LOCATION, FACTORY SEALED
LENS	SHATTER-RESISTANT, EXPLOSION PROOF GLASS
LIGHT SOURCE	SOLID STATE LEDS, 5000K, 60K HOURS RATED LIFE AT L70, 70 CRI MINIMUM
LUMEN OUTPUT	56W, 5800 LUMENS
DRIVER	100-277V, FIXED OUTPUT DRIVER
LISTINGS	JNIOSH-TR-46-2:2018, d2G5, CLASS 1, DIVISION 1, GROUP D HAZARDOUS LOCATION, JIS C 8105-1, WET LOCATION

DRAFT

19058

US Army Corps of Engineers®

MARK	DESCRIPTION	DATE

DESIGNED BY: PKU
DRAWN BY: MMES
CHECKED BY: PKU
SUBMITTED BY: MK ENGINEERS, LTD
SIZE: ISO A1
ISSUE DATE: -
SOLICITATION NO.: -
CONTRACT NO.: W912HV-17-D-0007
DRAWING CODE: -
FILE NAME: DESSC2OUX-E-504.dwg

U.S. ARMY CORPS OF ENGINEERS
JAPAN DISTRICT
APO AP 96343-5010

HDR - WTNA JV
1132 BISHOP STREET
SUITE 1200
HONOLULU, HAWAII 96813

MISAWA AIR BASE, JAPAN
DESC 20UX INSTALL ADDITIVE INJECTION SYSTEM

LIGHT FIXTURE DETAILS

SHEET ID

E-504

FILE: DESSC2OUX-E-504.dwg
DATE: 6/25/2018 5:05 PM
OPER:
SCALE:

IF SHEET IS LESS THAN 594 X 841 MM
REDUCED PRINT = USE GRAPHIC SCALES

FINAL

C:\Users\ftp\MK Engineers\W (CAD) - General\01_PROJECTS\2019\19058_Misawa_Install\Airtrips\Sys01_Dwg\Sheets\DESSC2OUX-E-504.dwg, Layout1, 2/16/2021 1:58:38 PM, ftp, 1:1

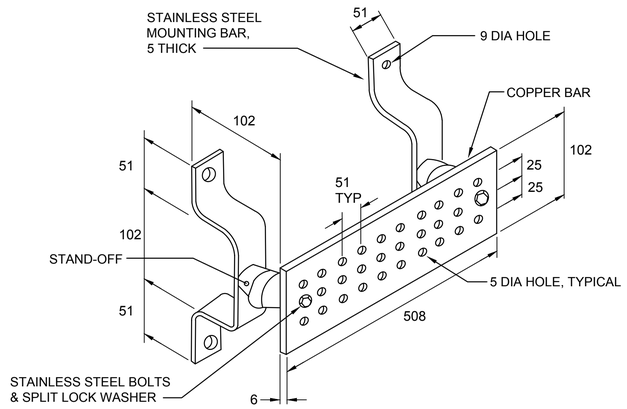

1 ELECTRICAL EQUIPMENT GROUND BAR (EGB) DETAIL

NOT TO SCALE

NOTES:

1. SECURE STAINLESS STEEL MOUNTING BAR TO WALL WITH APPROPRIATE SIZE OF STAINLESS STEEL BOLTS, NUTS & SPLIT WASHERS.
2. ALL GROUND LEADS SHALL BE TERMINATED TO THE EGB WITH TWO HOLE LUG, LONG BARREL COMPRESSION CONNECTORS. CLEAN CONTACT SURFACES OF CONNECTORS AND GROUND BAR, APPLY THIN COAT OF ANTI-OXIDATION COMPOUND, THEN TERMINATE CONNECTORS. REMOVE ANY EXCESS COMPOUND.
3. MOUNT EGB 1828 AFF.

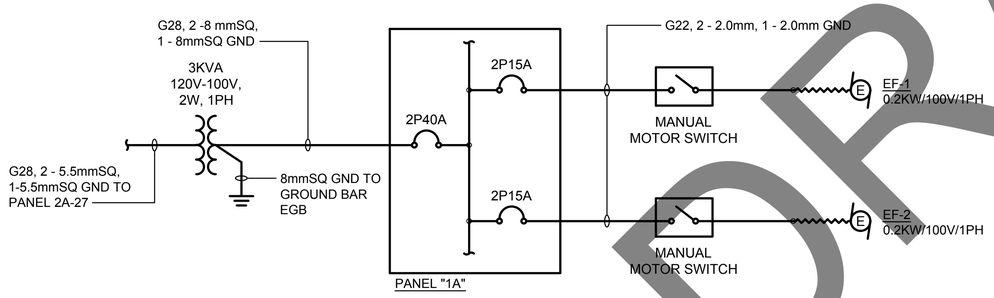

2 EXHAUST FAN TRANSFORMER WIRING DIAGRAM

NO SCALE

GROUNDING GENERAL NOTES:

1. WHEN MAKING CONNECTIONS, CLEAN CONTACT SURFACES OF THE CONNECTORS AND GROUND BARS, APPLY A THIN COAT OF NO OXIDE JOINT COMPOUND THEN MAKE CONNECTION.
2. LABEL LEADS WITH THE PROPER NUMBERS IDENTIFYING THE LEADS & ITS USE ON 25 x 76 PLASTIC ID PLATES. CONTRACTOR TO SUPPLY AND ATTACH. SEE SCHEDULE.
3. GROUND WIRE RUNS TO BE AS STRAIGHT AS POSSIBLE WITH NO SHARP BENDS OR LOOPS. MINIMUM BEND RADII ARE:
   160 MINIMUM FOR UP TO 14mmSQ.
   310 MINIMUM FOR UP TO 100mmSQ.
   610 MINIMUM FOR SIZES GREATER THAN 100mmsq.
4. ALL GROUND WIRES MUST BE CONTINUOUS WITHOUT SPLICES AND IF PLACED IN CONDUIT MUST BE NON-METALLIC CONDUIT. AN EXOTHERMIC WELD IS NOT CONSIDERED A SPLICE.
5. TWO HOLE LUG, LONG BARREL COMPRESSION CONNECTORS TO BE USED FOR ALL GROUND CONNECTIONS TO THE GROUND BARS AND GROUND PLATES.
6. DO NOT ENCIRCLE ANY GROUNDING CONDUCTOR WITH A METAL CLAMP. DO NOT RUN GROUNDING CONDUCTOR THROUGH METAL WALLS OR PLATES AND IN METALLIC CONDUIT. IF ENCIRCLED METALLIC CLAMP IS USED, PROVIDE CLAMP WITH AIR SPACE AND USE INSULATED (NYLON) BOLT.
7. PROVIDE HEAT SHRINK TUBING BETWEEN THE CONDUCTOR AND DOUBLE HOLE COMPRESSION LUG.
8. PROVIDE DUCT SEAL ON ALL OPEN ENDS OF CONDUIT.
9. SEPARATE THE GROUND BAR 102 FROM WALL. PROVIDE FOUR (4) 304 THICK SPOOL INSULATORS BETWEEN WALL AND BAR.
10. GROUNDING CONDUCTOR(S) SHALL BE INDIVIDUALLY PROTECTED BY INSTALLING IN 27C (MINIMUM) UNLESS OTHERWISE NOTED. CONDUIT(S) SHALL BE EXTENDED 152 TO EDGE OF BAR.

DRAFT

19058

US Army Corps of Engineers®

MARK	DESCRIPTION	DATE

DESIGNED BY: PKU
DRAWN BY: MKE
CHECKED BY: PKU
SUBMITTED BY: MK ENGINEERS, LTD
SIZE: ISO A1
ISSUE DATE: -
SOLICITATION NO.: -
CONTRACT NO.: W912HV-17-D-0007
DRAWING CODE: -
FILE NAME: DESSC2OUX-E-505.dwg

U.S. ARMY CORPS OF ENGINEERS
JAPAN DISTRICT
APO AP 96343-5010

HDR - WTNA JV
1132 BISHOP STREET
SUITE 1200
HONOLULU, HAWAII 96813

MISAWA AIR BASE, JAPAN
DESC 20UX INSTALL ADDITIVE INJECTION SYSTEM

ELECTRICAL EQUIPMENT GROUND BAR (EGB) DETAIL

SHEET ID

E-505

FILE: DESSC2OUX-E-505.dwg
DATE: 6/25/2018 5:05 PM
OPER:
SCALE:

IF SHEET IS LESS THAN 594 X 841 MM
REDUCED PRINT = USE GRAPHIC SCALES

FINAL

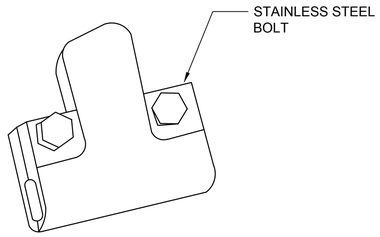

1 T-SPLICE DETAIL
NOT TO SCALE

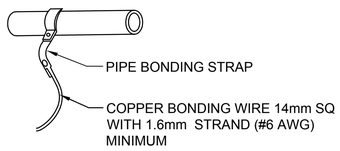

2 TYPICAL BOND DETAIL
NOT TO SCALE

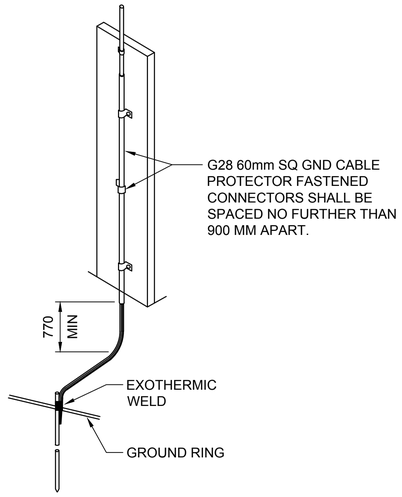

3 TYPICAL DOWNLEAD AND GROUND DETAIL
NOT TO SCALE

NOTES:

1. BOND THE DOWN CONDUCTOR AND CONDUIT TO THE STRUCTURAL STEEL AT THE TOP AND BOTTOM ENDS OF THE CONDUIT.
2. BOND ANY METALLIC MASSES WITHIN THE SIDE FLASH DISTANCE OF UNLESS IT HAS A SURFACE AREA LESS THAN 0.26mm SQ OR VOLUME OF LESS THAN 0.016 CUM.
3. DETAIL IS TYPICAL FOR FLAT WALLS AND CONCRETE COLUMNS.

DRAFT

19058

US Army Corps of Engineers®

MARK	DESCRIPTION	DATE

DESIGNED BY: PKU
DRAWN BY: MKE
CHECKED BY: PKU
SUBMITTED BY: MK ENGINEERS, LTD
SIZE: ISO A1
ISSUE DATE: -
SOLICITATION NO.: -
CONTRACT NO.: W912HV-17-D-0007
DRAWING CODE: -
FILE NAME: DESSC2OUX-E-506.dwg

U.S. ARMY CORPS OF ENGINEERS
JAPAN DISTRICT
APO AP 96343-5010

HDR - WTNA JV
1132 BISHOP STREET
SUITE 1200
HONOLULU, HAWAII 96813

MISAWA AIR BASE, JAPAN
DESC 20UX INSTALL ADDITIVE INJECTION SYSTEM

LIGHTNING PROTECTION SYSTEM
DETAILS - 1

SHEET ID
E-506

FILE: DESSC2OUX-E-506.dwg
DATE: 6/25/2018 5:05 PM
OPER:
SCALE:

IF SHEET IS LESS THAN 594 X 841 MM
REDUCED PRINT = USE GRAPHIC SCALES

FINAL

C:\Users\ftp\MK Engineers\W (CAD) - General\01_PROJECTS\2019\19058_Misawa_InstlAddtivejectSys\01_Dwg\Sheets\DESSC2OUX-E-506.dwg, Layout1, 2/13/2021 1:32:06 PM, ftp, 1:1

LIGHTNING PROTECTION NOTES:

1. LIGHTNING PROTECTION

   a. INSTALLATION OF AIR TERMINALS AND GROUNDING CONDUCTORS FOR LIGHTNING PROTECTION SHALL CONFORM TO NFPA 780.

   b. ALL MATERIALS FOR LIGHTNING PROTECTION SHALL BE NFPA 780, CLASS I.

2. PROVIDE GUARDS FOR DOWN CONDUCTORS. GUARDS SHALL BE PROVIDED FROM A MINIMUM OF 1.8M ABOVE GRADE TO 0.3M BELOW GRADE. GUARDS SHALL BE G28.

3. DOWN CONDUCTORS SHALL BE TERMINATED ON BURIED GROUND RODS BETWEEN 0.3M TO 0.6M BELOW GRADE AND BETWEEN 0.6M AND 1.2M OUTSIDE THE FOUNDATION OF THE BUILDING. BONDS TO GROUND RODS SHALL BE THE EXOTHERMIC TYPE.

4. ROOF CONDUCTORS SHALL BE INSTALLED TO MAINTAIN A HORIZONTAL COURSE. DOWN CONDUCTORS SHALL BE INSTALLED TO MAINTAIN A DOWNWARD COURSE. ROOF AND DOWN CONDUCTORS SHALL NOT BE BENT TO FORM AN ANGLE OF LESS THAN 1.575 RADIANS (90 DEGREES). BEND RADII SHALL NOT BE LESS THAN 203mm.

5. BOND ALL METALLIC BODIES ON THE STRUCTURE SUBJECT TO INDUCED CHARGES TO THE LIGHTNING PROTECTION SYSTEM, INCLUDING BUT NOT LIMITED TO: ROOF DRAINS, PLUMBING VENTS, METAL FLASHING, GUTTERS, DOWNSPOUTS, DOOR AND WINDOW FRAMES, VENTILATION LOUVERS, AND ANY ISOLATED METALLIC BODY WITHIN 1.8M OF AN EXPOSED LIGHTNING PROTECTION SYSTEM ELEMENT.

6. UTILIZE STAINLESS STEEL STRAPS AND FASTENERS TO FASTEN LIGHTNING CONDUCTORS.

7. CONTRACTOR SHALL NOT PENETRATE ROOF MEMBRANE WHEN INSTALLING LIGHTNING PROTECTION. UTILIZE ADHESIVE CABLE HOLDERS AND BASES TO SECURE CABLE AND AIR TERMINALS TO ROOF. UTILIZE MANUFACTURER'S RECOMMENDED METHOD TO SECURE HOLDERS AND BASES TO ROOF.

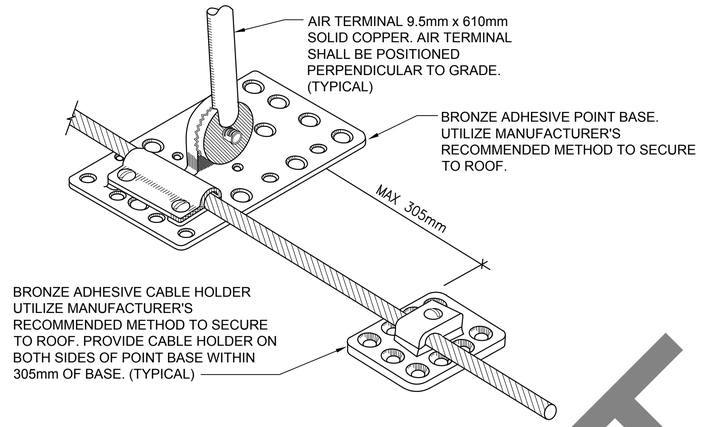

1 LIGHTNING PROTECTION ROOF MOUNTING DETAIL
NOT TO SCALE

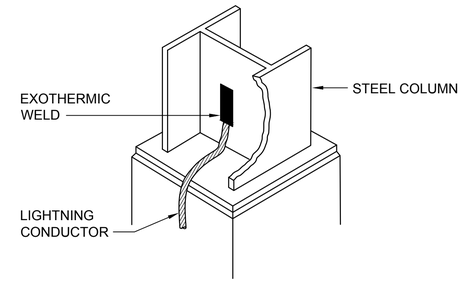

3 STRUCTURAL STEEL BONDING DETAIL
NOT TO SCALE

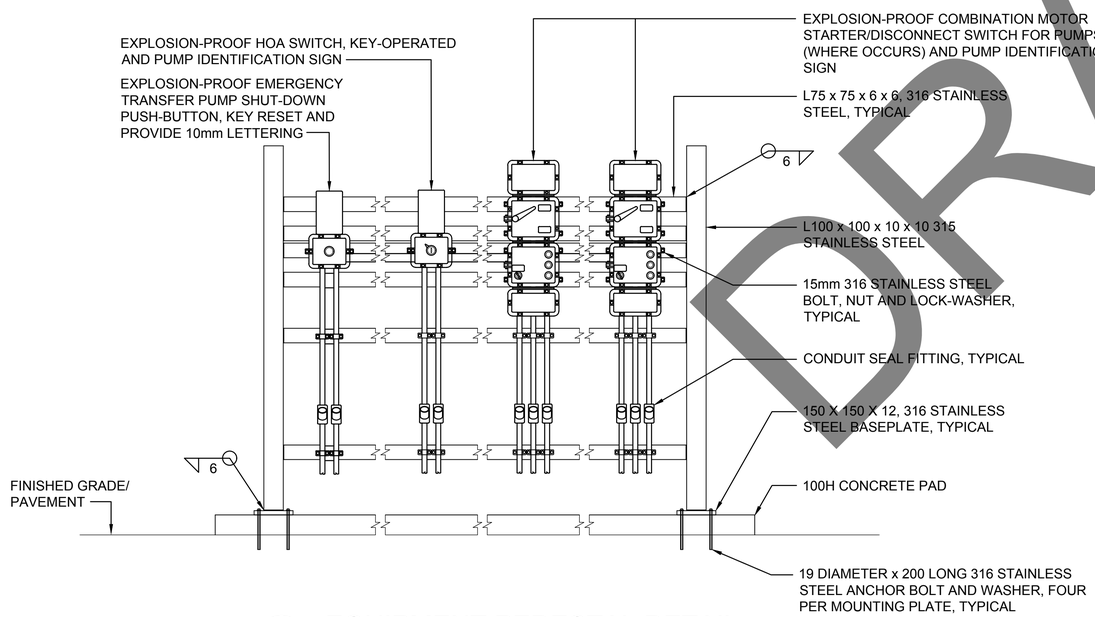

4 EQUIPMENT PEDESTAL DETAIL
NOT TO SCALE

NOTES:

1. THIS DETAIL SHOWS A FREE-STANDING CONDITION; FOR WALL MOUNTED CONDITION, CONCRETE PAD AND MOUNTING FRAME SHALL BE DELETED AND MOUNT EQUIPMENT DIRECTLY TO WALL.

2. SEE ELECTRICAL DRAWINGS FOR COMBINATIONS OF EQUIPMENT PER PEDESTAL.

3. PROVIDE 6.35mm LETTERING FOR ALL IDENTIFICATION SIGNS UON.

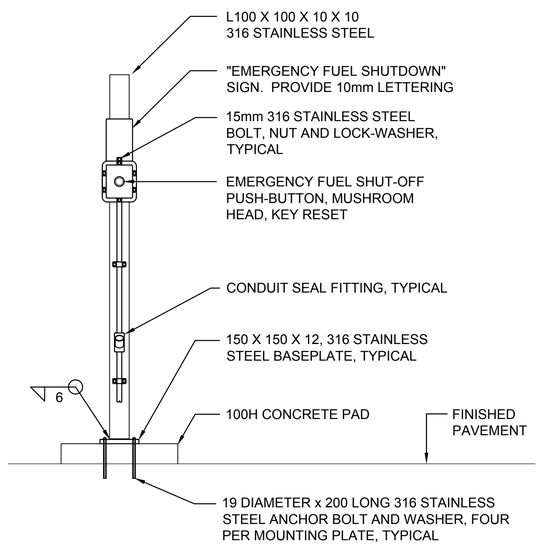

5 EFSO PUSH BUTTON DETAIL
NOT TO SCALE

NOTES:

1. THIS DETAIL SHOWS A FREE-STANDING CONDITION; FOR WALL MOUNTED CONDITION, CONCRETE PAD AND MOUNTING FRAME SHALL BE DELETED AND MOUNT EQUIPMENT DIRECTLY TO WALL.

DRAFT

19058

US Army Corps of Engineers®

MARK	DESCRIPTION	DATE

DESIGNED BY: PKU | ISSUE DATE: -
DRAWN BY: MKE | SOLICITATION NO.:
CHECKED BY: PKU | CONTRACT NO.: W912HV-17-D-0007
SUBMITTED BY: MK ENGINEERS, LTD | DRAWING CODE: -
SIZE: ISO A1 | FILE NAME: DESSC2OUX-E-507.dwg

U.S. ARMY CORPS OF ENGINEERS
JAPAN DISTRICT
APO AP 96343-5010

HDR - WTNA JV
1132 BISHOP STREET
SUITE 1200
HONOLULU, HAWAII 96813

MISAWA AIR BASE, JAPAN
DESC 20UX INSTALL ADDITIVE INJECTION SYSTEM

LIGHTNING PROTECTION SYSTEM
DETAILS - 2

SHEET ID
E-507

FILE: DESSC2OUX-E-507.dwg
DATE: 6/25/2018 5:05 PM
OPER:
SCALE:

IF SHEET IS LESS THAN 594 X 841 MM
REDUCED PRINT = USE GRAPHIC SCALES

FINAL

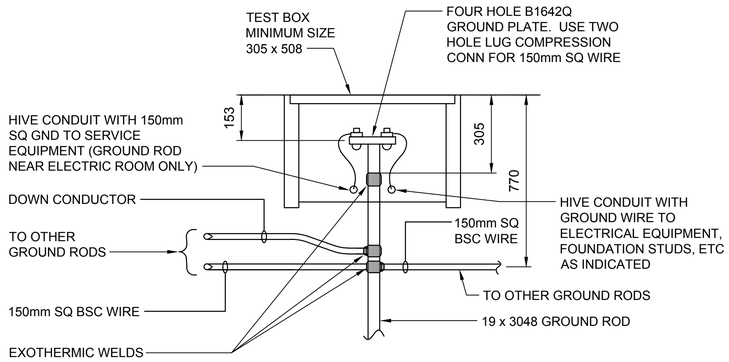

1 GROUND TEST BOX DETAIL

NOT TO SCALE

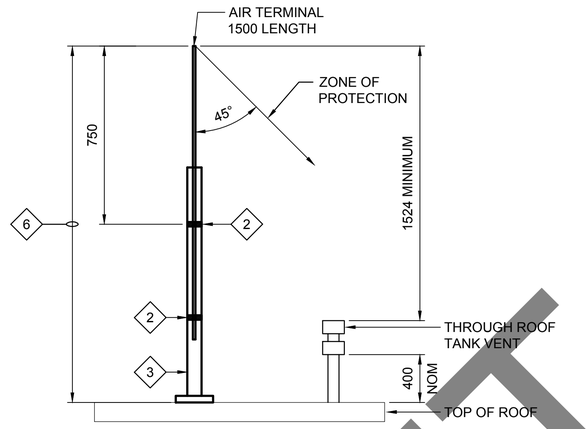

2 TALL AIR TERMINAL DETAIL

NOT TO SCALE

NOTES:

1. LIGHT LINES DENOTE EXISTING CONDITION
   BOLD LINES DENOTE NEW WORK

2. PROVIDE TERMINAL PIPE CLAMP IN A MINIMUM OF TWO LOCATIONS, AT THE HALF WAY POINT AND AT A LOCATION BELOW NEAR THE BOTTOM 15% OF THE AIR TERMINAL.

3. PROVIDE A MINIMUM 2000L x 100 DIAMETER GALVANIZED STEEL PIPE WITH A WELDED SQUARE BASE OF MINIMUM 7mm THICKNESS TO MOUNT THE AIR TERMINAL. PROVIDE A PIPE CAP FOR THE TOP OF THE PIPE AND PRIME AND PAINT THE PIPE TO MATCH THE ROOF.

4. PROVIDE TWO BONDING CONDUCTORS PER AIR TERMINAL.

5. ADJUST THE BASE OF THE AIR TERMINAL AND MOUNTING PIPE FOR THE ROOF SLOPE SO THAT THE ASSEMBLY IS VERTICAL.

6. SET TOP OF TERMINAL SUCH THAT THE ZONE OF PROTECTION (45 DEGREE LINE) CROSSES +300 ABOVE THE OUTSIDE EDGE OF THE ROOF.

DRAFT

19058

US Army Corps of Engineers®

MARK	DESCRIPTION	DATE

DESIGNED BY: PKU
DRAWN BY: MWE
CHECKED BY: PKU
SUBMITTED BY: MK ENGINEERS, LTD
SIZE: ISO A1
ISSUE DATE: -
SOLICITATION NO.: -
CONTRACT NO.: W912HV-17-D-0007
DRAWING CODE: -
FILE NAME: DESSC2OUX-E-508.dwg

U.S. ARMY CORPS OF ENGINEERS
JAPAN DISTRICT
APO AP 96343-5010

HDR - WTNA JV
1132 BISHOP STREET
SUITE 1200
HONOLULU, HAWAII 96813

MISAWA AIR BASE, JAPAN
DESC 20UX INSTALL ADDITIVE INJECTION SYSTEM

LIGHTNING PROTECTION SYSTEM
DETAILS - 3

SHEET ID

E-508

FILE: DESSC2OUX-E-508.dwg
DATE: 6/25/2018 5:05 PM
OPER:
SCALE:

IF SHEET IS LESS THAN 594 X 841 MM
REDUCED PRINT = USE GRAPHIC SCALES

FINAL

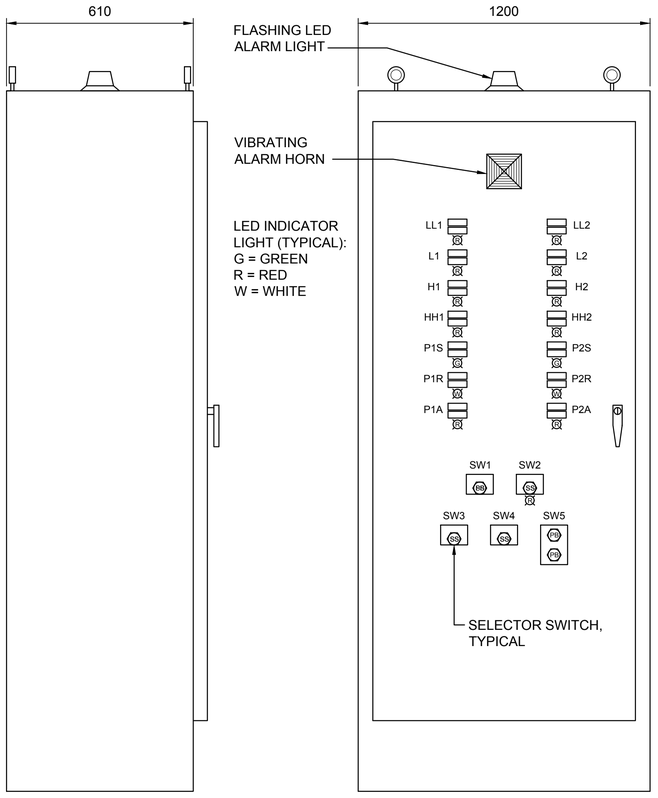

LEFT SIDE LAYOUT

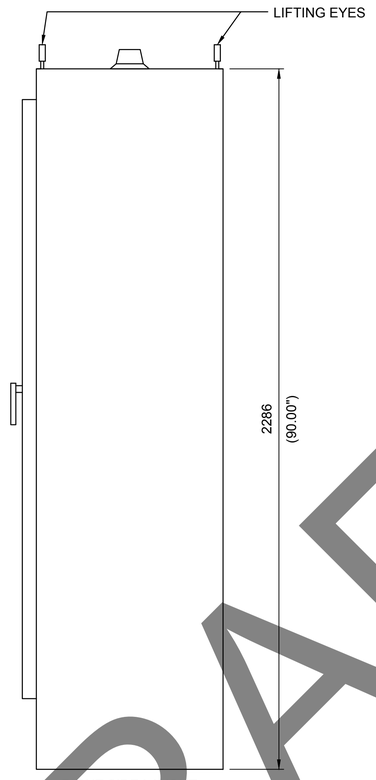

RIGHT SIDE LAYOUT

FSII TANK 1 LOW-LOW	LL1	FSII TANK 2 LOW-LOW	LL2
FSII TANK 1 LOW	L1	FSII TANK 2 LOW	L2
FSII TANK 1 HIGH	H1	FSII TANK 2 HIGH	H2
FSII TANK 1 HIGH-HIGH	HH1	FSII TANK 2 HIGH-HIGH	HH2
FSII TANK 1 PUMP STOP	P1S	FSII TANK 2 PUMP STOP	P2S
FSII TANK 1 PUMP RUN	P1R	FSII TANK 2 PUMP RUN	P2R
FSII TANK 1 PUMP ALARM	P1A	FSII TANK 2 PUMP ALARM	P2A

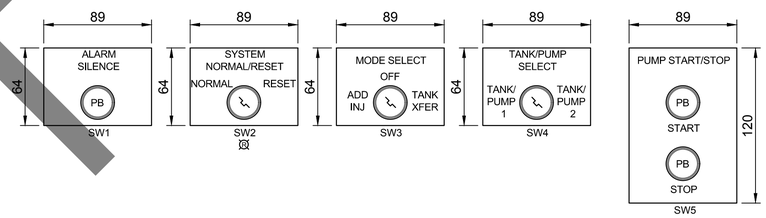

NOTES:

1. ALL NAMEPLATES ARE BLACK WITH WHITE 4 LETTERING
2. ALL NAMEPLATES ARE 2-19 x 19 UNLESS OTHERWISE NOTED
3. ALL NAMEPLATES SHALL INCLUDE JAPANESE TEXT LOCATED DIRECTLY ABOVE THE ENGLISH NAMEPLATE.

NOTES:

1. ENCLOSURE IS A IP67 CONSTRUCTED OF CORROSION RESISTANT STEEL. FRONT ACCESS WITH 3 POINT LATCH ASSEMBLY INTERIOR FINISH - GLOSS WHITE POLYESTER POWDER COAT; EXTERIOR FINISH - LIGHT GRAY POLYESTER POWDER COAT.

1 ADDITIVE INJECTION PUMP CONTROL PANEL (AIP) DETAILS

SCALE: 1:10

NOTES:

1. THIS DETAIL IS TO ILLUSTRATE GENERAL REQUIREMENTS FOR THE ADDITIVE INJECTION PUMP CONTROL PANEL (AIP) ONLY. SEE SPECIFICATIONS FOR THE DETAILED REQUIREMENTS.
2. ALL LIGHTS SHALL HAVE LED SOURCES.

DRAFT

0 500 1000
1:10

US Army Corps of Engineers®

MARK	DESCRIPTION	DATE

DESIGNED BY: PKU
DRAWN BY: MKE
CHECKED BY: PKU
SUBMITTED BY: MK ENGINEERS, LTD
SIZE: ISO A1
FILE NAME: DESSC2OUX-E-509.dwg
ISSUE DATE: -
SOLICITATION NO.: -
CONTRACT NO.: W912HV-17-D-0007
DRAWING CODE: -

U.S. ARMY CORPS OF ENGINEERS
JAPAN DISTRICT
APO AP 96343-5010

HDR - WTNA JV
1132 BISHOP STREET
SUITE 1200
HONOLULU, HAWAII 96813

MISAWA AIR BASE, JAPAN
DESC 20UX INSTALL ADDITIVE INJECTION SYSTEM

ADDITIVE INJECTION PUMP CONTROL PANEL (AIP) DETAILS

SHEET ID
E-509

FILE: DESSC2OUX-E-509.dwg
DATE: 6/25/2018 5:05 PM
OPER:
SCALE:

IF SHEET IS LESS THAN 594 X 841 MM
REDUCED PRINT = USE GRAPHIC SCALES

FINAL

19058

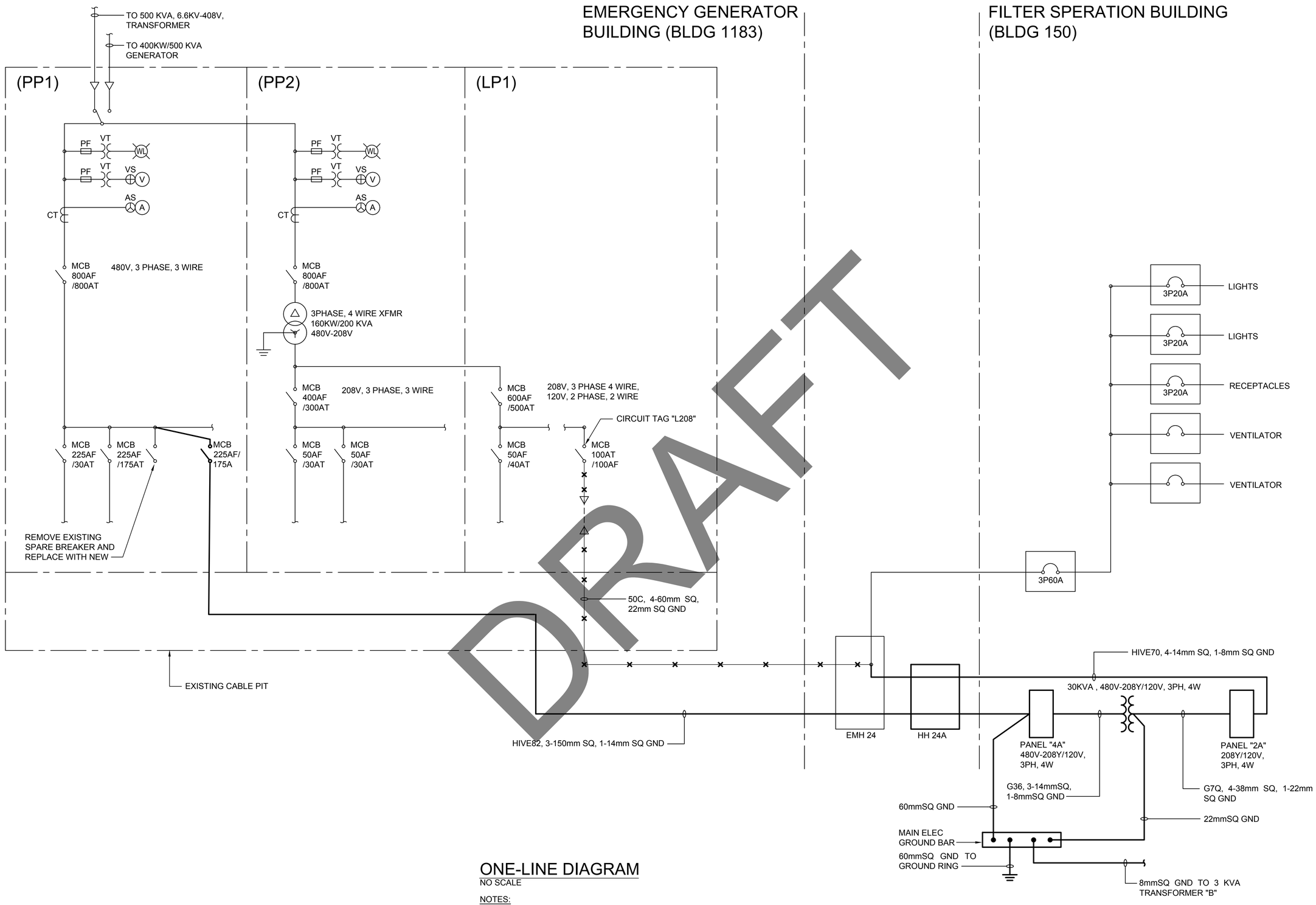

DRAFT

ONE-LINE DIAGRAM

NO SCALE

NOTES:

1. LIGHT LINES DENOTE EXISTING CONDITION
   BOLD LINES DENOTE NEW WORK
   "X" DENOTES REMOVAL WORK

US Army Corps of Engineers®

MARK	DESCRIPTION	DATE

DESIGNED BY: PKU
DRAWN BY: MKE
CHECKED BY: PKU
SUBMITTED BY: MK ENGINEERS, LTD
SIZE: ISO A1
ISSUE DATE: -
SOLICITATION NO.: -
CONTRACT NO.: W912HV-17-D-0007
DRAWING CODE: -
FILE NAME: DESSC2OUX-E-601.dwg

U.S. ARMY CORPS OF ENGINEERS
JAPAN DISTRICT
APO AP 96343-5010

HDR - WTNA JV
1132 BISHOP STREET
SUITE 1200
HONOLULU, HAWAII 96813

MISAWA AIR BASE, JAPAN
DESC 20UX INSTALL ADDITIVE INJECTION SYSTEM

ONE-LINE DIAGRAM

SHEET ID

E-601

FILE: DESSC2OUX-E-601.dwg
DATE: 6/25/2018 5:05 PM
OPER:
SCALE:

IF SHEET IS LESS THAN 594 X 841 MM
REDUCED PRINT = USE GRAPHIC SCALES

FINAL

LEGEND

	VENTURI	S	SOLENOID VALVE OPERATOR	DI	DIGITAL INPUT
	VALVE	M	MOTOR VALVE OPERATOR	DO	DIGITAL OUTPUT
RTU	REMOTE TERMINAL UNIT	MC XXX	MOTOR CONTROLLER	AI	ANALOG INPUT
ZS XXX	VALVE POSITION SWITCH	P	PUMP	AO	ANALOG OUTPUT
HS XXX	HAND SWITCH	M XXX	PUMP MOTOR	YSS XXX	E-STOP PUSH BUTTON
FSL XXX	FLOW SWITCH	XY XXX	LIQUID SENSOR	EY XXX	POWER STATUS
LT XXX	LEVEL TRANSMITTER	TS XXX	TEMPERATURE SENSOR	YY XXX	E-STOP STATUS
LI XXX	LEVEL INDICATOR	TT XXX	TEMPERATURE TRANSMITTER	I-1	INTERLOCK
LIT XXX	LEVEL INDICATING TRANSMITTER	PDT XXX	PRESSURE DIFFERENTIAL TRANSMITTER	SS	SELECTOR SWITCH
LS XXX	LEVEL SWITCH LOW	PIT XXX	PRESSURE INDICATING TRANSMITTER	PB S	PUSH-BUTTON STOP
LSL XXX	LEVEL SWITCH LOW	PE XXX	PRESSURE SENSOR	PB R	PUSH-BUTTON RUN
LSH XXX	LEVEL SWITCH HIGH	LG XXX	GREEN LIGHT		
LSLL XXX	LEVEL SWITCH LOW LOW	LW XXX	WARNING LIGHT		
LSHH XXX	LEVEL SWITCH HIGH HIGH	LR XXX	RED LIGHT		

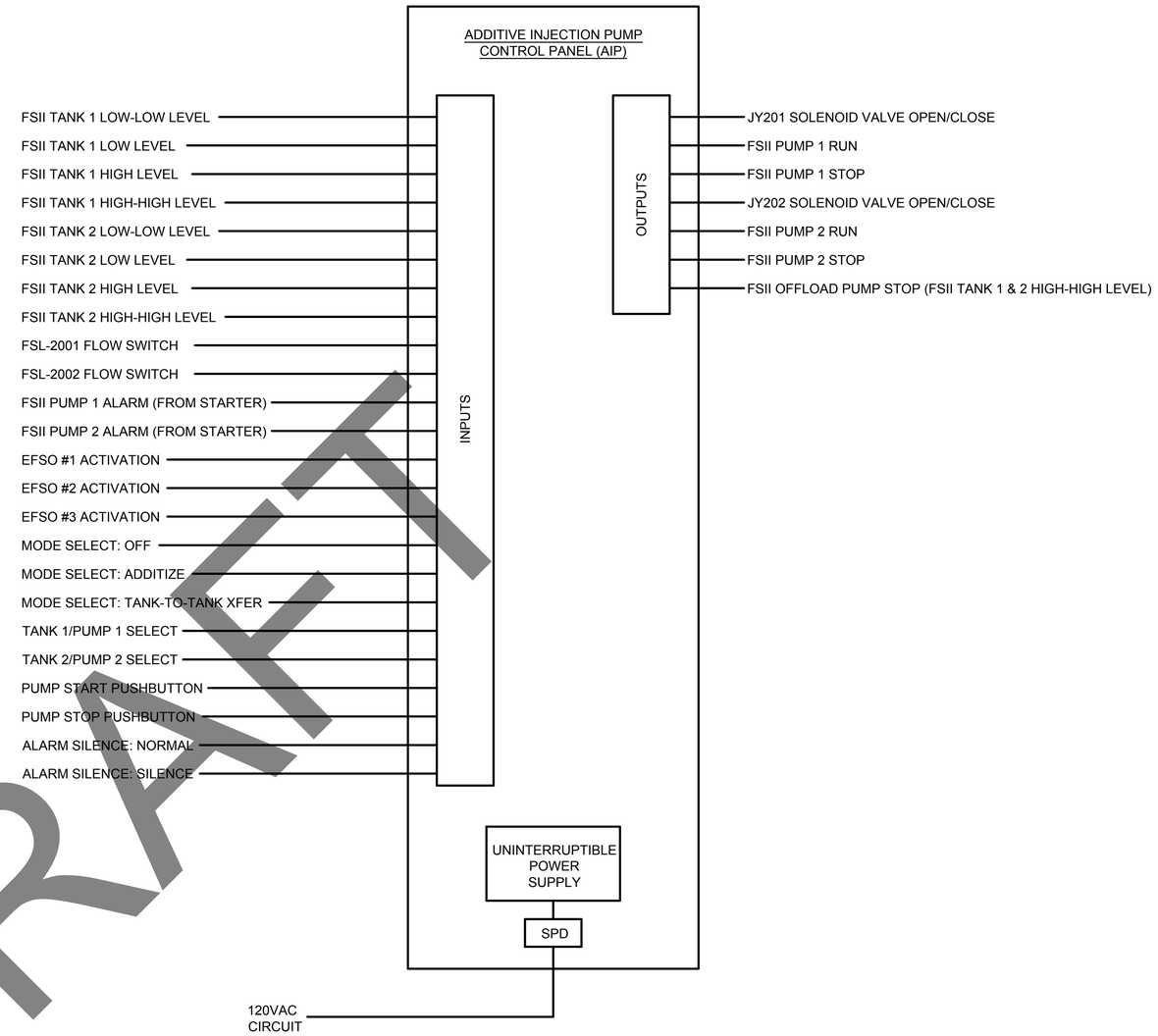

ADDITIVE INJECTION CONTROL PANEL (AIP) DIAGRAM

NO SCALE

DRAFT

19058

US Army Corps of Engineers®

MARK	DESCRIPTION	DATE

DESIGNED BY: PKU | ISSUE DATE: - | SOLICITATION NO.: -
DRAWN BY: MKE | CONTRACT NO.: W912HV-17-D-0007
CHECKED BY: PKU | DRAWING CODE: -
SUBMITTED BY: MK ENGINEERS, LTD | FILE NAME: DESSC2OUX-E-602.dwg
SIZE: ISO A1

U.S. ARMY CORPS OF ENGINEERS
JAPAN DISTRICT
APO AP 96343-5010

HDR - WTNA JV
1132 BISHOP STREET
SUITE 1200
HONOLULU, HAWAII 96813

MISAWA AIR BASE, JAPAN
DESC 20UX INSTALL ADDITIVE INJECTION SYSTEM

ADDITIVE INJECTION CONTROL PANEL (AIP) DIAGRAM

SHEET ID

E-602

FILE: DESSC2OUX-E-602.dwg
DATE: 6/25/2018 5:05 PM OPER: SCALE:

IF SHEET IS LESS THAN 594 X 841 MM
REDUCED PRINT = USE GRAPHIC SCALES

FINAL

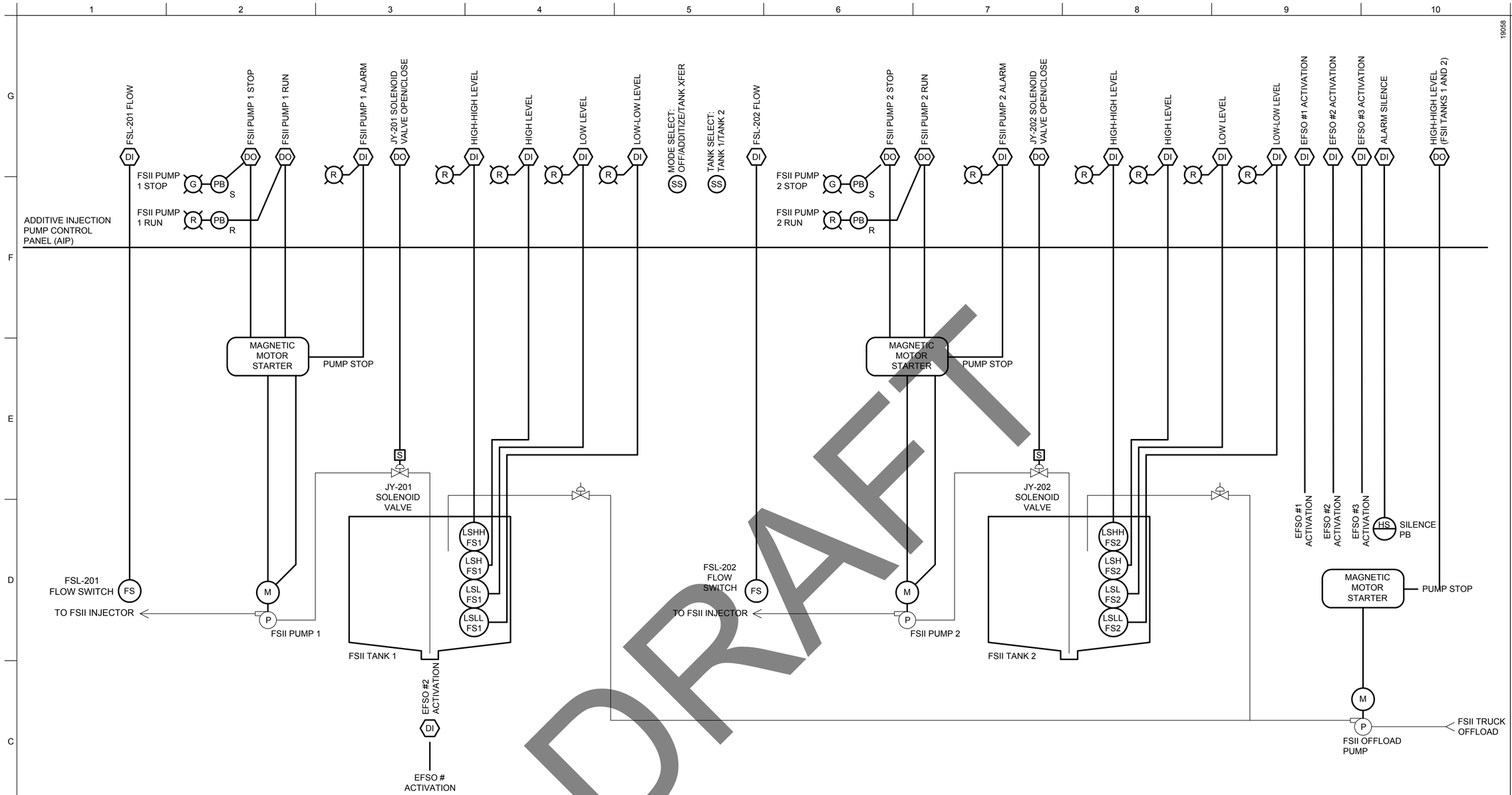

DRAFT

ADDITIVE INJECTION CONTROL SYSTEM I/O

NO SCALE

NOTES:

1. BOLD LINES DENOTE NEW WORK
   LIGHT LINES DENOTE FUEL PIPING
2. SYMBOL LEGEND, SEE SHEET E-602 .

US Army Corps of Engineers®

MARK	DESCRIPTION	DATE

DESIGNED BY: PKU | ISSUE DATE: - | SOLICITATION NO.: - | DRAWN BY: MKE | CONTRACT NO.: W912HV-17-D-0007 | CHECKED BY: PKU | DRAWING CODE: - | SUBMITTED BY: MK ENGINEERS, LTD | FILE NAME: DESSC2OUX-E-603.dwg | SIZE: ISO A1

U.S. ARMY CORPS OF ENGINEERS
FAR EAST DISTRICT
APO AP 96343-5010

HDR - WTNA JV
1132 BISHOP STREET
SUITE 2200
HONOLULU, HAWAII 96813

MISAWA AIR BASE, JAPAN
DESC 20UX INSTALL ADDITIVE INJECTION SYSTEM

ADDITIVE INJECTION CONTROL SYSTEM I/O

SHEET ID

E-603

FILE: DESSC2OUX-E-603.dwg
DATE: 6/25/2018 5:05 PM OPER: SCALE:

IF SHEET IS LESS THAN 594 X 841 MM
REDUCED PRINT = USE GRAPHIC SCALES

FINAL

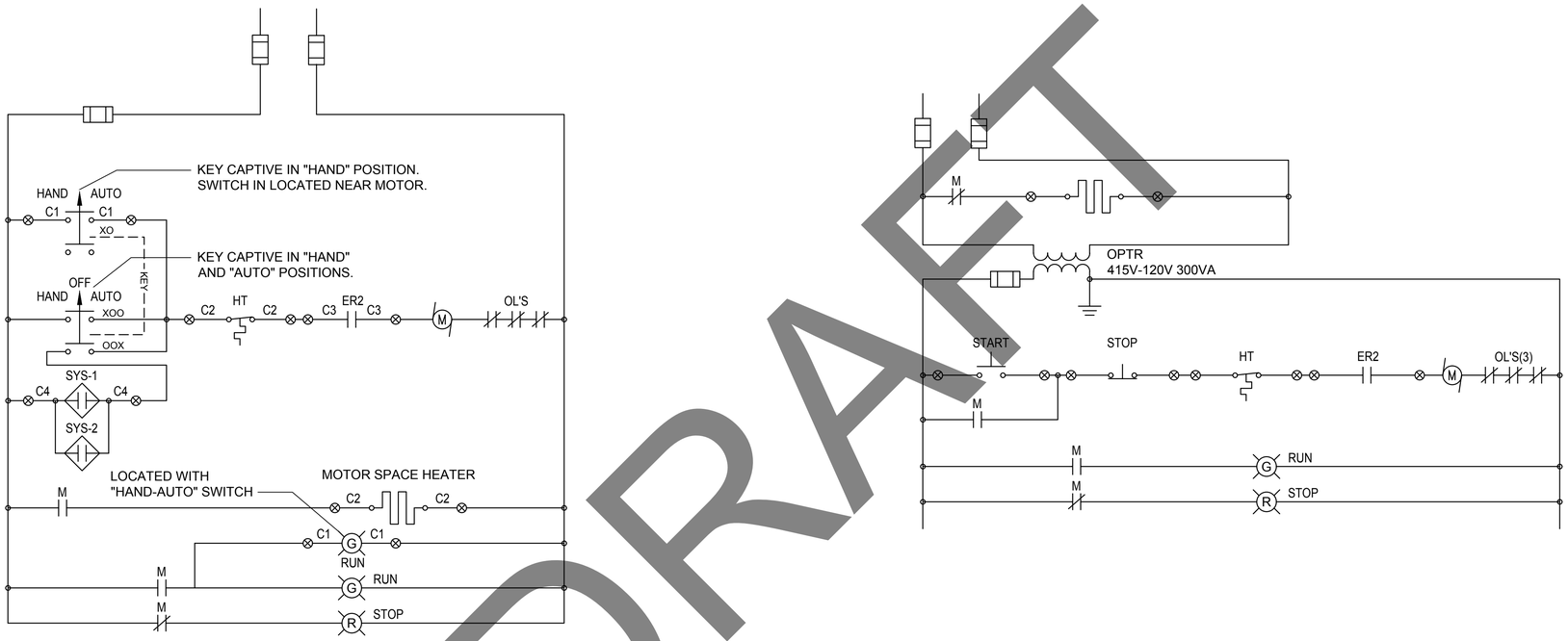

1 CONTROL DIAGRAMS
NO SCALE

DRAFT

US Army Corps of Engineers®

MARK	DESCRIPTION	DATE

DESIGNED BY: BMJAKAIAU
DRAWN BY: NAME
CHECKED BY: PKUYEDA
SUBMITTED BY: PKUYEDA
SIZE: ISO A1
ISSUE DATE: -
SOLICITATION NO.: -
CONTRACT NO.: W912HV-17-D-0007
DRAWING CODE: -
FILE NAME: DESSC2OUX-E-604.dwg

U.S. ARMY CORPS OF ENGINEERS
JAPAN DISTRICT
APO AP 96343-5010

HDR - WTNA JV
1132 BISHOP STREET
SUITE 1200
HONOLULU, HAWAII 96813

MISAWA AIR BASE, JAPAN
DESC 20UX INSTALL ADDITIVE INJECTION SYSTEM

CONTROL DIAGRAMS

SHEET ID

E-604

FILE: DESSC2OUX-E-604.dwg
DATE: 6/25/2018 5:05 PM
OPER:
SCALE:

IF SHEET IS LESS THAN 594 X 841 MM
REDUCED PRINT = USE GRAPHIC SCALES

FINAL

PANEL 1A

VOLTAGE:	100V, 1PH, 2W	MAIN BKR:	3P40A
BUS:	COPPER	TYPE:	BOLT ON
BUS RATING:	100	MOUNT:	SURFACE
AIC:	10,000	ENCLOSURE:	

EQUIPMENT GROUND BUS:	YES
ISOLATED GROUND BUS:	NO
FEED THRU LUGS:	NO
U.L. LISTED AS SERVICE ENTRANCE EQUIPMENT:	NO

KVA A	KVA B	KVA C	DESCRIPTION: L-LIGHTS R-RECEPTACLE, S-SPARE PFB-PROV FOR FUTURE CB	CKT BKR	CKT NO	CKT NO	CKT BKR	DESCRIPTION: L-LIGHTS R-RECEPTACLE, S-SPARE PFB-PROV FOR FUTURE CB	KVA A	KVA B	KVA C
0.1			EF-1	1P15A	1	2	1P15A	EF-2	0.1		
	0.5		S	1P20A	3	4	1P20A	S		0.5	
			PFB	--	5	6	--	PFB			
0.1	0.5	0.0			SUBTOTALS				0.1	0.5	0.0

1.2 TOTAL KVA
0.8 DEMAND FACTOR
1.0 DEMAND KVA
6 DEMAND AMPS 100 volts

NOTES:
1) * - REMOVE AND RELOCATE EXISTING CIRCUIT BREAKER
2) ** - PROVIDE DEDICATED NEUTRAL
3) + - PROVIDE ISOLATED GND CONDUCTOR W/BRANCH WIRING
4) ++ - PROVIDE NEW CIRCUIT BREAKER IN EXISTING PFB
5) VERIFY CIRCUIT BREAKER REQUIREMENTS FOR AIR CONDITIONING LOADS WITH MANUFACTURER. REVISE AS REQUIRED.

PANEL 4A

VOLTAGE:	480V, 3 PH, 3W	MAIN BKR:	3P150A
BUS:	COPPER	TYPE:	BOLT ON
BUS RATING:	225	MOUNT:	SURFACE
AIC:	14,000	ENCLOSURE:	

EQUIPMENT GROUND BUS:	YES
ISOLATED GROUND BUS:	NO
FEED THRU LUGS:	NO
U.L. LISTED AS SERVICE ENTRANCE EQUIPMENT:	NO

KVA A	KVA B	KVA C	DESCRIPTION: L-LIGHTS R-RECEPTACLE, S-SPARE PFB-PROV FOR FUTURE CB	CKT BKR	CKT NO	CKT NO	CKT BKR	DESCRIPTION: L-LIGHTS R-RECEPTACLE, S-SPARE PFB-PROV FOR FUTURE CB	KVA A	KVA B	KVA C
24.0			ELECTRIC WATER HEATER	3P125A*	1	2	3P50A	XFMR "A"	10.0		
	24.0		PART OF 1	--	3	4	--	PART OF 2		10.0	
		24.0	PART OF 1	--	5	6	--	PART OF 2			10.0
0.5			S	1P20A	7	8	3P25A	OP-1 FSII OFFLOAD PUMP	4.0		
	0.5		S	1P20A	9	10	1P20A	PART OF 8		4.0	
		0.5	S	1P20A	11	12	1P20A	PART OF 8			4.0
			PFB	--	13	14	--	PFB			
			PFB	--	15	16	--	PFB			
			PFB	--	17	18	--	PFB			
			PFB	--	19	20	--	PFB			
			PFB	--	21	22	--	PFB			
			PFB	--	23	24	--	PFB			
			PFB	--	25	26	--	PFB			
			PFB	--	27	28	--	PFB			
			PFB	--	29	30	--	PFB			
24.5	24.5	24.5			SUBTOTALS				14.0	14.0	14.0

115.5 TOTAL KVA
0.8 DEMAND FACTOR
92.4 DEMAND KVA
111 DEMAND AMPS 480 volts

NOTES:
1) * - PROVIDE A LOCAKBLE BREAKER.
2) ** - PROVIDE DEDICATED NEUTRAL
3) + - PROVIDE ISOLATED GND CONDUCTOR W/BRANCH WIRING
4) ++ - PROVIDE NEW CIRCUIT BREAKER IN EXISTING PFB
5) VERIFY CIRCUIT BREAKER REQUIREMENTS FOR AIR CONDITIONING LOADS WITH MANUFACTURER. REVISE AS REQUIRED.

PANEL 2A

VOLTAGE:	208Y/120V, 3 PH, 4W	MAIN BKR:	3P110A
BUS:	COPPER	TYPE:	BOLT ON
BUS RATING:	125	MOUNT:	SURFACE
AIC:	10,000	ENCLOSURE:	

EQUIPMENT GROUND BUS:	YES
ISOLATED GROUND BUS:	NO
FEED THRU LUGS:	NO
U.L. LISTED AS SERVICE ENTRANCE EQUIPMENT:	NO

KVA A	KVA B	KVA C	DESCRIPTION: L-LIGHTS R-RECEPTACLE, S-SPARE PFB-PROV FOR FUTURE CB	CKT BKR	CKT NO	CKT NO	CKT BKR	DESCRIPTION: L-LIGHTS R-RECEPTACLE, S-SPARE PFB-PROV FOR FUTURE CB	KVA A	KVA B	KVA C
3.0			EXISTING FILTER BUILDING LOADS	3P60A	1	2	1P20A	S	0.5		
	3.0		PART OF 1	--	3	4	1P20A	S		0.5	
		3.0	PART OF 1	--	5	6	1P20A	S			0.5
1.0			AP-201 FSII ADD PUMP	1P15A	7	8	1P15A	AP-203 CI/LI ADD PUMP	1.0		
	1.0		AP-202 FSII ADD PUMP	1P15A	9	10	1P15A	DP-204 DRUM PUMP RECEPTACLE		0.8	
		0.3	MX-201 SDA MIXER	3P15A	11	12	3P15A	PU-211 BREAKOUT TANK PUMP			1.0
0.3			PART OF 11	--	13	14	1P15A	MX-202 CI/LI MIXER	3.0		
	0.3		PART OF 11	--	15	16	--	PART OF 14		0.3	
		0.2	R-ELEC RM & FIRE SPRINKLER RISER	1P20A	17	18	--	PART OF 14			0.3
0.3			L-EXT ELEC & SPRINKLER RM	1P20A	19	20	1P20A	L-ADDITIVE STORAGE CANOPY	0.3		
	0.2		L-ELEC RM & SPRINKLER RM	1P20A	21	22	1P20A	ADDITIVE INJECTION PANEL		0.5	
		0.3	AREA LIGHTS	2P20A	23	24	1P20A	NITROGEN GENERATION SYSTEM			1.7
0.3			PART OF 23	--	25	26	1P20A	UH - UNIT HEATER	0.5		
	1.5		XFMR "B"	2P20A	27	28	1P20A	S		0.5	
		1.5	PART OF 27	--	29	30	1P20A	S			0.5
0.5			S	1P20A	31	32	1P20A	S	0.5		
	0.5		S	1P20A	33	34	1P20A	S		0.5	
		0.5	S	1P20A	35	36	1P20A	S			0.5
			PFB	--	37	38	--	PFB			
			PFB	--	39	40	--	PFB			
			PFB	--	41	42	--	PFB			
5.4	6.5	5.8			SUBTOTALS				5.8	3.1	4.5

31.1 TOTAL KVA
0.8 DEMAND FACTOR
24.9 DEMAND KVA
69 DEMAND AMPS 208 volts

NOTES:
1) * - REMOVE AND RELOCATE EXISTING CIRCUIT BREAKER
2) ** - PROVIDE DEDICATED NEUTRAL
3) + - PROVIDE ISOLATED GND CONDUCTOR W/BRANCH WIRING
4) ++ - PROVIDE NEW CIRCUIT BREAKER IN EXISTING PFB
5) VERIFY CIRCUIT BREAKER REQUIREMENTS FOR AIR CONDITIONING LOADS WITH MANUFACTURER. REVISE AS REQUIRED.

DRAFT

19058

US Army Corps of Engineers®

MARK	DESCRIPTION	DATE

DESIGNED BY: PKU
DRAWN BY: MKE
CHECKED BY: PKU
SUBMITTED BY: MK ENGINEERS, LTD
SIZE: ISO A1
ISSUE DATE: -
SOLICITATION NO.: -
CONTRACT NO.: W912HV-17-D-0007
DRAWING CODE: -
FILE NAME: DESSC2OUX-E-701.dwg

U.S. ARMY CORPS OF ENGINEERS
JAPAN DISTRICT
APO AP 96343-5010

HDR - WTNA JV
1132 BISHOP STREET
SUITE 1200
HONOLULU, HAWAII 96813

MISAWA AIR BASE, JAPAN
DESC 20UX INSTALL ADDITIVE INJECTION SYSTEM

PANEL SCHEDULES

SHEET ID
E-701

FILE: DESSC2OUX-E-701.dwg
DATE: 6/25/2018 5:05 PM OPER: SCALE:

IF SHEET IS LESS THAN 594 X 841 MM
REDUCED PRINT = USE GRAPHIC SCALES

FINAL