Fuse holder terminal blocks

for 6,35 x 25,4 mm *1/4 x 1 in.* and 6,35 x 32 mm *1/4 x 1 1/4 in.* fuses

Compression clamp

DIN 1 - DIN 3

ML 10/13.SFL...

Spacing 13 mm *(.512")*

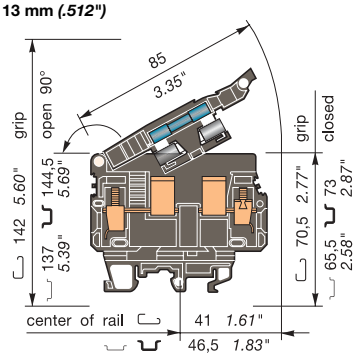

13 mm block with neon blown fuse indicator.

Color	Type	Part numbers
Black V0/110-230V	**ML 10/13.SFL**	**0199 168.00**
Black V0/480V	**ML 10/13.SFL1**	**0199 165.25**

Characteristics

Wire size		IEC NFC DIN	UL	CSA
Compression clamp	Solid wire	0,5-16 mm²	22-10 AWG	22-8 AWG
	Stranded wire	0,5-10 mm²	22-10 AWG	22-8 AWG

Voltage			
Rated	800 V (1)	600 V (1)	600 V (1)
Pulse	8 kV		
Pollution degree	3		

Current			
Rated	16 A	25 A	25 A

Wire size			
Rated / Gauge	10 mm² / A6	10 AWG	8 AWG

Wire stripping length	Recomm. screwdriver	Recomm. torque	Protection
12 mm *.472"*	5,5 mm *.217"*	1,2-1,4 Nm *10.6-12.3 lb.in*	

ML 10/13.SFD...

Spacing 13 mm *(.512")*

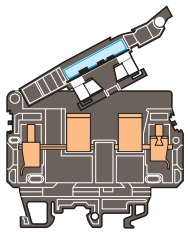

13 mm block with LED blown fuse indicator.

Color	Type	Part numbers
Black V0/LED 24V	**ML 10/13.SFD**	**0199 166.26**
Black V0/LED 48V	**ML 10/13.SFD1**	**0199 167.27**

Characteristics

Wire size		IEC NFC DIN	UL	CSA
Compression clamp	Solid wire	0,5-16 mm²	22-10 AWG	22-8 AWG
	Stranded wire	0,5-10 mm²	22-10 AWG	22-8 AWG

Voltage			
Rated	800 V (1)	600 V (1)	600 V (1)
Pulse	8 kV		
Pollution degree	3		

Current			
Rated	16 A	25 A	25 A

Wire size			
Rated / Gauge	10 mm² / A6	10 AWG	8 AWG

Wire stripping length	Recomm. screwdriver	Recomm. torque	Protection
12 mm *.472"*	5,5 mm *.217"*	1,2-1,4 Nm *10.6-12.3 lb.in*	

End stop th. 9,1 mm	**BADL** V0		**0199 408.02**
End stop th. 9,1 mm	**BAM**		**0103 002.26**
Other end stops : See Accessories section			
Rail 35 x 7,5 x 1	**PR30**	prepunched	**0173 220.05**
Rail 35 x 15 x 2,3	**PR4**		**0168 500.12**
Rail 35 x 15 x 1,5	**PR5**	prepunched	**0101 598.26**
Rail 32 x 15	**PR1Z2**		**0163 050.04**
Other rails : See Accessories section			

Notes

The use of some accessories may decrease the block's voltage rating. For more information, consult us.

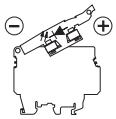

** Blocks with LED indicator are labeled "+" on the outside of the lever. The indicator can be reversed in the field if required.*

Accessories

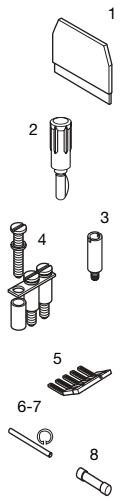

		Type		Part numbers
1	End section black	**FEM13U** V0	th. 1,5 mm	**0199 635.24**
2	Test plug	**FC2**	DIA. 2 mm	**0007 865.26**
		FC4	DIA. 4 mm	**0167 860.01**
3	Test socket	**AL2**	DIA. 2 mm	**0163 043.21**
		AL3	DIA. 3 mm	**0163 261.00**
		AL4	DIA. 4 mm	**0163 262.01**
4	Standard jumper bar	**BJS131** (2)	10 poles	**0175 991.11**
	screw for **BJS**	**VJS11**		**0163 394.26**
	washer for **BJS**	**RDJ11**		**0168 783.01**
5	Comb-type jumper bar 70 A	**PC13**	10 poles	**0173 510.20**
6	Assembly rod	**TGA13**	2 poles	**0168 564.05**
		TGA13	3 poles	**0168 565.06**
		TGA13	4 poles	**0168 566.07**
7	Assembly ring	**ANT**		**0168 675.14**
8	Fuse 6,35x32 mm (1/4 x 1 1/4")	**FU633**	6,35 x 32	
	BPC quick-blow fuse cartridge		0,25 A	**0168 554.03**
	as per IEC 127-2		0,63 A	**0168 555.04**
			1 A	**0168 556.05**
			1,6 A	**0168 557.06**
			2,5 A	**0168 558.17**
			4 A	**0168 559.10**
			6,3 A	**0168 560.15**
	HPC time delay fuse cartridge		10 A	**0168 561.02**
	as per UL 198G		16 A	**0168 562.03**

Leakage current with neon indicator < 0,5 mA (110 & 480 V) < 0,7 mA (230 V)

R See section on markers marking method

		Type		Part numbers
1	End section black	**FEM13U** V0	th. 1,5 mm	**0199 635.24**
2	Test plug	**FC2**	DIA. 2 mm	**0007 865.26**
		FC4	DIA. 4 mm	**0167 860.01**
3	Test socket	**AL2**	DIA. 2 mm	**0163 043.21**
		AL3	DIA. 3 mm	**0163 261.00**
		AL4	DIA. 4 mm	**0163 262.01**
4	Standard jumper bar	**BJS131** (2)	10 poles	**0175 991.11**
	screw for **BJS**	**VJS11**		**0163 394.26**
	washer for **BJS**	**RDJ11**		**0168 783.01**
5	Comb-type jumper bar 70 A	**PC13**	10 poles	**0173 510.20**
6	Assembly rod	**TGA13**	2 poles	**0168 564.05**
		TGA13	3 poles	**0168 565.06**
		TGA13	4 poles	**0168 566.07**
7	Assembly ring	**ANT**		**0168 675.14**
8	Fuse 6,35x32 mm (1/4 x 1 1/4")	**FU633**	6,35 x 32	
	BPC quick-blow fuse cartridge		0,25 A	**0168 554.03**
	as per IEC 127-2		0,63 A	**0168 555.04**
			1 A	**0168 556.05**
			1,6 A	**0168 557.06**
			2,5 A	**0168 558.17**
			4 A	**0168 559.10**
			6,3 A	**0168 560.15**
	HPC time delay fuse cartridge		10 A	**0168 561.02**
	as per UL 198G		16 A	**0168 562.03**

Leakage current with LED indicator 24 V or 48 V < 4,5 mA

(6) RC610 on top of block (17) RC810 on sides of block (26)

(6) RC610 on top of block (17) RC810 on sides of block (26)

Note : (1) Insulation voltage of terminal block - operating voltage : In accordance with fuse rating.
(2) Use of these accessories requires the user to cut out the partition.