Table of contents

MOTOROLA
test equipment

COMMUNICATIONS SYSTEM ANALYZER

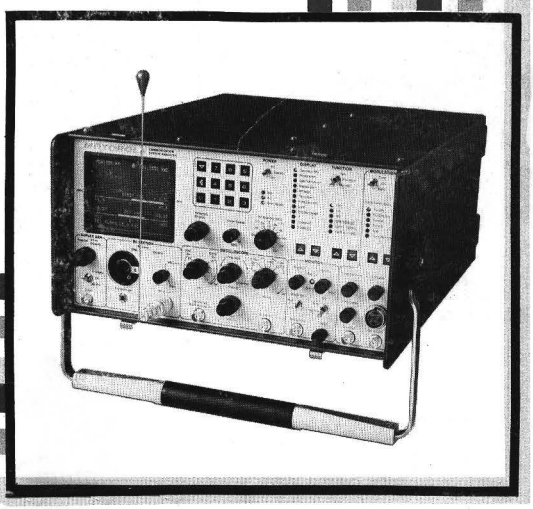

R-2001A/R-2002A

68P81069A84-O

MOTOROLA INC.
Communications
Group

R-2001A/R-2002A COMMUNICATIONS SYSTEM ANALYZER

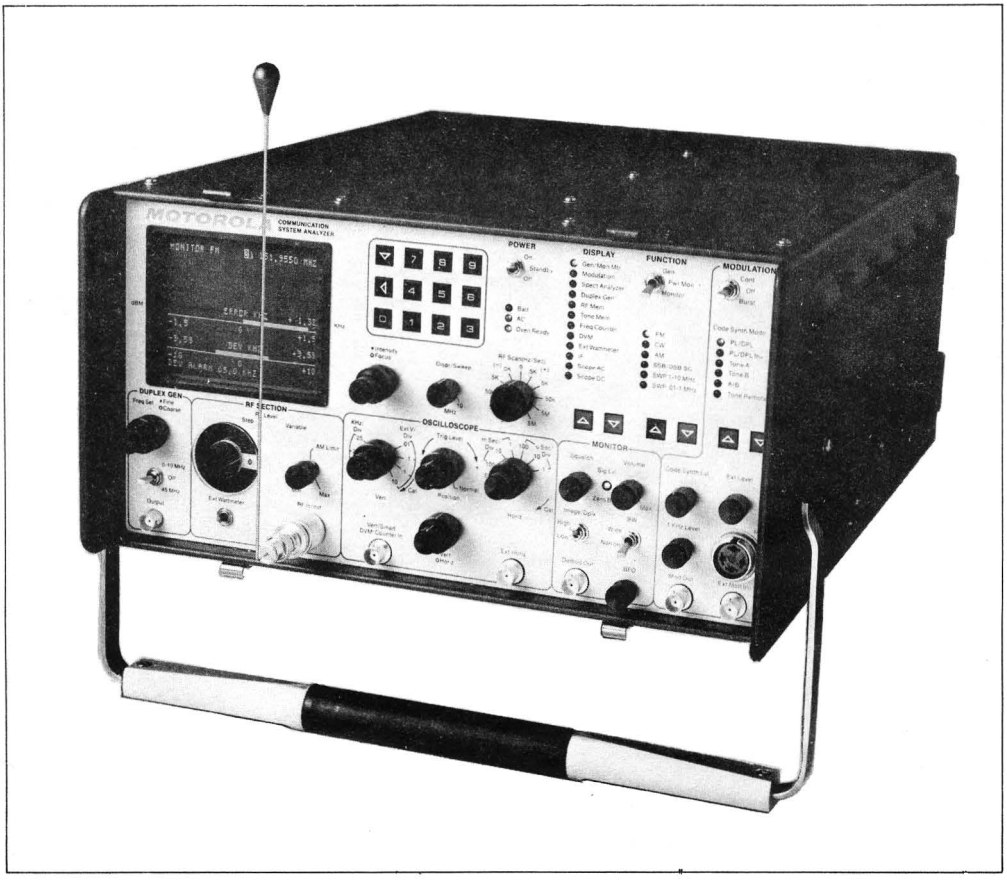

© Motorola, Inc. 1980
All Rights Reserved
Printed in U.S.A.

1313 E. Algonquin Road, Schaumburg, Il. 60196

68P81069A84-O
5/30/80-SK

TABLE OF CONTENTS

Paragraph Page

FOREWORD .....

SECTION 1

1-1 Introduction 1-1

SECTION 2 — DESCRIPTION

2-1 Description 2-1
2-3 Microprocessor 2-1
2-4 Display 2-1
2-5 System Warnings 2-1
2-6 Functions 2-1
2-7 AM, FM, CW, DSB Signal Generation 2-2
2-8 Simultaneous Modulation 2-2
2-9 Modulation Display 2-2
2-10 Sweep Generation 2-2
2-11 SINAD Metering 2-2
2-12 Multi-Mode Code Synthesizer 2-2
2-13 Off-The-Air Monitor 2-2
2-14 IF Display 2-2
2-15 Spectrum Analyzer 2-3
2-16 RF Burnout Protection 2-3
2-17 Terminated RF Power Measurement 2-3
2-18 In-Line Power Measurement 2-3
2-19 Duplex Generator 2-3
2-20 500-kHz Oscilloscope 2-3
2-21 Frequency Counter 2-4
2-22 AC/DC Voltmeter..... 2-4
2-23 Power Supply 2-4
2-24 Accessories 2-4

SECTION 3 — INSTALLATION

3-1 Packing Information 3-1
3-4 Initial Setup 3-1
3-5 Analyzer 3-1
3-6 Battery Pack 3-2
3-7 Blower Assembly 3-2

SECTION 4 — OPERATION

4-1 General 4-1
4-3 Controls, Indicators, and Connectors 4-1
4-5 Operation 4-12
4-7 Calibrate 4-12

TABLE OF CONTENTS (CONT)

Paragraph Page

SECTION 4 — OPERATION (CONT)

4-8 Generator Operation 4-13
4-9 Duplex Generation 4-14
4-10 Frequency Counter 4-15
4-11 Spectrum Analyzer 4-15
4-12 Monitor 4-16
4-13 Ext Wattmeter 4-17
4-14 Simultaneous Generate and Measurement Operations 4-17

SECTION 5 — MAINTENANCE

5-1 Service 5-1
5-6 Replacement Parts Ordering 5-1
5-9 Addresses 5-1
5-10 General Offices 5-1
5-11 U.S.Orders 5-2
5-12 Canadian Motorola Electronics Company 5-2
5-13 All Countries Except U. S. and Canada 5-2
5-14 Major Assemblies 5-4
5-16 Theory of Operation 5-5
5-17 General 5-5
5-20 System Control 5-5
5-25 Generate Mode 5-5
5-34 Power Meter 5-11
5-40 Monitor Mode 5-12
5-52 Duplex Generator 5-14
5-56 Code Synthesizer 5-15
5-65 Frequency Counter 5-17
5-71 Digital Voltmeter (DVM) 5-17
5-84 Oscilloscope 5-19
5-96 Sinad Meter 5-21
5-99 Alignment Procedure 5-22
5-100 Introduction 5-22
5-102 Test Equipment Required 5-22
5-104 Preparation for Alignment 5-23
5-105 Basic Alignment Procedure 5-23
5-118 Extended Alignment Procedure 5-27
5-126 Checkout Procedure 5-32
5-127 Introduction 5-32
5-129 Test Equipment Required 5-32
5-131 Procedure 5-33
5-146 System Troubleshooting 5-37

SECTION 6 — SYSTEM INTERCONNECT AND PARTS LISTS

TABLE OF CONTENTS (CONT)

Paragraph Page

SECTION 7 - LOW VOLTAGE POWER SUPPLY (A1)

7-1 General 7-1
7-2 Input Power Control 7-1
7-6 DC Output Control 7-1
7-9 Protection Circuitry 7-1
7-13 High Voltage Supply Control 7-2

SECTION 8 — SCOPE AMPLIFIER (A2)

8-1 General 8-1
8-2 Deflection Amplifiers 8-1
8-3 Horizontal Timebase Generator 8-1
8-5 Horizontal Switching 8-1
8-6 Intensity Control 8-1
8-8 Focus Control 8-1
8-9 Astigmatism, Geometry, and Trace Rotation 8-1

SECTION 9 - SCOPE/DVM CONTROL MODULE (A3)

9-1 General 9-1
9-4 Scope Vertical Control 9-1
9-7 SSB Detection 9-1
9-8 455 kHz PLL 9-2
9-9 Scope Horizontal Control 9-2
9-11 Synthesizer Sweep Control 9-2
9-12 Scope Z-Axis Control 9-2
9-13 Modulation Display Control 9-2
9-17 Peak Detector 9-3
9-18 DVM Control 9-3
9-21 SINAD Detection 9-4
9-22 Module Control 9-4

SECTION 10 — RECEIVER (A4)

10-1 General 10-1
10-2 Down Converter 10-1
10-4 Linear IF Amplifier and Detectors 10-1
10-8 Audio Switching and Filtering 10-1
10-10 Logarithmic Amplifier and Detector 10-2
10-11 Alarm Generator and Audio Amplifier 10-2
10-12 Module Control 10-2

SECTION 11 — RF SYNTHESIZER (A5)

11-1 General 11-1
11-2 Frequency Synthesis Scheme 11-1

TABLE OF CONTENTS (CONT)

Paragraph Page

SECTION 11 - RF SYNTHESIZER (A5) (CONT)

11-5 310-440 MHz Phase Locked Loop 11-1
11-6 60.5 MHz Phase Locked Loop 11-1
11-7 550 MHz Phase Locked Loop 11-1
11-9 500-1000 MHz Phase Locked Loop 11-2
11-10 Modulation Control 11-2
11-11 Module Control 11-2

SECTION 12 - AUDIO SYNTHESIZER (A6)

12-1 General 12-1
12-2 Private Line Generator 12-1
12-7 DPL Generator 12-1
12-10 1 kHz Tone 12-2
12-11 External Modulation 12-2
12-12 Modulation Control 12-2
12-14 Module Control 12-2

SECTION 13 — PROCESSOR I/O MODULE (A7)

13-1 General 13-1
13-2 10.245 MHz Phase Locked Loop 13-1
13-3 System Control Bus Interface 13-1
13-6 DVM 13-1
13-8 Frequency Counter 13-1

SECTION 14 - IEEE INTERFACE MODULE (A8)

14-1 General 14-1
14.2 IEEE Bus Interface 14-1
14-3 RF Level Control 14-1
14-5 Modulation Control 14-1
14-6 Address Decode and Control Latches 14-1

SECTION 15 - PROCESSOR MODULE (A9)

15-1 General 15-1
15-2 Processor 15-1
15-6 Character Generator 15-1

SECTION 16 — HIGH VOLTAGE POWER SUPPLY (A10)

16-1 General 16-1
16-2 High Voltage Supply 16-1

TABLE OF CONTENTS (CONT)

Paragraph Page

SECTION 17 — RF INPUT MODULE (AH)

17-1 General **17-1**
17-2 Input Protection and Power Meter 17-1
17-4 Wideband Amplifier and Frequency Converter 17-1
17-9 Duplex Generator 17-2

SECTION 18 - FRONT PANEL INTERFACE MODULE

18-1 General 18-1
18-2 Input Coupling and Ranging 18-1
18-4 DVM Buffer 18-1
18-5 Frequency Counter Preamp 18-1
18-6 Scope Vertical Preamp 18-1
18-7 Scope Horizontal Preamp 18-1
18-8 Control and Display Interface 18-1

SECTION 19 - 10 MHz FREQUENCY STANDARD MODULE (A13)

19-1 General 19-1

SECTION 20 — FRONT PANEL (A14)

SECTION 21 — BLOWER ASSEMBLY

SECTION 22 — IEEE - 488 BUS CONTROL

22-1 Introduction 22-1
22-7 IEEE-488 Bus Structure 22-3
22-9 Bus Signals 22-3
22-10 Data Transfer 22-3
22-12 Programming 22-3
22-15 Command Structure 22-4
22-24 Command Strings 22-10
22-25 Command Types 22-10
22-29 Trigger Command 22-10
22-30 Return Data 22-10
22-35 Programming Commands 22-11
22-36 Terminal Mode 22-11
22-42 Error Messages 22-11
22-45 Service Requests 22-14
22-46 Programming Considerations 22-15
22-53 General 22-16
22-54 R2002A Analyzer Configuration 22-16

SECTION 23 — BATTERY ASSEMBLY

LIST OF ILLUSTRATIONS

Figure Page

1-1 Communications System Analyzer 1-0
2-1 Accessories Supplied with Analyzer 2-4
3-1 Typical Communication System Analyzer Packaging 3-1
4-1 Controls, Indicators, and Connectors, Front Panel 4-2
4-2 Controls, Indicators, and Connectors, Left Side Panel 4-3
4-3 Controls, Indicators, and Connectors, Rear Panel 4-3
4-4 System Analyzer Time Base Calibrate Test Setup and CRT Display 4-13
4-5 Duplex Generation Test Setup and CRT Display 4-14
4-6 Spectrum Test Setup and CRT Display 4-16
4-7 Wattmeter Test Setup and CRT Display 4-17
4-8 Test Setup for FM Receiver Sensitivity Using Generator and SINAD Meter with CRT Display 4-18
4-9 Test Setup for Pager and Alert Functions with CRT Display 4-19
4-10 Test Setup for Using DVM and Signal Generate with CRT Display 4-20
5-1 Communication System Analyzer, Top View Cover Removed 5-3
5-2 Communication System Analyzer, Bottom View Cover Removed 5-3
5-4 Generate Mode Block Diagram 5-10
5-5 Power Meter Block Diagram 5-12
5-6 Monitor Mode Block Diagram 5-13
5-7 Duplex Generator Block Diagram 5-15
5-8 Code Synthesizer Block Diagram 5-16
5-9 Frequency Counter Block Diagram 5-17
5-10 Digital Voltmeter (DVM) Block Diagram 5-18
5-11 Oscilloscope Block Diagram 5-20
5-12 Sinad Meter Block Diagram 5-22
5-13 Scope Amplifier Alignment Points 5-23
5-14 Front Panel Interface Alignment Points 5-26
5-15 Scope/DVM Control Alignment Points 5-27
5-16 Horizontal Time Base Alignment Points 5-27
5-17 DVM Input Buffer Alignment Points 5-28
5-18 Scope/DVM Control Test Point Numbering 5-28
5-19 Processor I/O A/D Alignment Points 5-29
—-5-20 Scope/DVM Control Char Sweep and Sinad Alignment Points 5-30

LIST OF TABLES

Table		Page
1-1	Physical Characteristics	1-1
1-2	Electrical Characteristics	1-1
1-3	Input/Output Characteristics	1-5
2-1	Accessories Supplied with the Communication Systems Analyzer	2-5
2-2	Optional Equipment for Use with Analyzer	2-5
4-1	Controls, Indicators, and Connectors	4-1
5-1	List of Subassemblies	5-4
5-2	Control Buses and Functions	5-9
5-3	Basic Test Equipment Required	5-22
5-4	Extended Test Equipment Required	5-23
5-5	Test Equipment	5-32
5-6	System Troubleshooting	5-37
5-7	Test Point Identification	5-42
9-1	Internal DVM Inputs	9-3
22-1	IEEE-488 Interface Controllable Functions	22-2
22-2	Command Categories	22-4
22-3	Programming Commands	22-5
22-4	Terminal Mode ASC II Characters Printable Characters	22-12
22-5	Error Messages	22-14
22-6	SRQ Data	22-14
22-7	Code Synthesizer Programming Considerations	22-15

FOREWORD

1. SCOPE OF MANUAL

This manual contains information for the installation, operation, and maintenance of the Communications System Analyzer.

2. PURPOSE AND USE

The Motorola Communications System Analyzer is a portable test instrument, designed specifically for the service and monitoring of communications equipment. Its functions supersede those of a Service Monitor, expanding the features and capabilities to the point wherein servicing is achieved with a single instrument, rather than a host of separate equipment.

The R2001A is the standard Communications System Analyzer. The R2002A Analyzer, which contains the IEEE-488 Standard interface control bus, is also available. Programming for the R2002A is covered in Secton 22 of this manual.

The Analyzer improves a technician's efficiency and accuracy and reduces servicing time.

The Communications System Analyzer performs the functions of signal generation, signal monitoring, and the tests normally associated with the devices listed below.

- Spectrum Analyzer
- Duplex Generator
- Modulation Oscilloscope
- Frequency Counter
- AC/DC Digital Voltmeter
- RF Wattmeter
- General Purpose Oscilloscope
- Multi-Mode Code Synthesizer
- SINAD Meter
- Sweep Generator

The Analyzer meets the shock and vibration requirements of EIA test RS152B, the same specifications met by Motorola mobile radios. This minimizes failures when the instrument is used in a mobile service van, and means it is as tough as the radios it services.

The Communications System Analyzer is designed to be serviced quickly and easily, should a breakdown occur. The majority of the circuitry is on seven modular plug-in circuit boards which have built-in test points that aid in isolating the problem to a specific board. Simple plug-in replacement gets the instrument back in

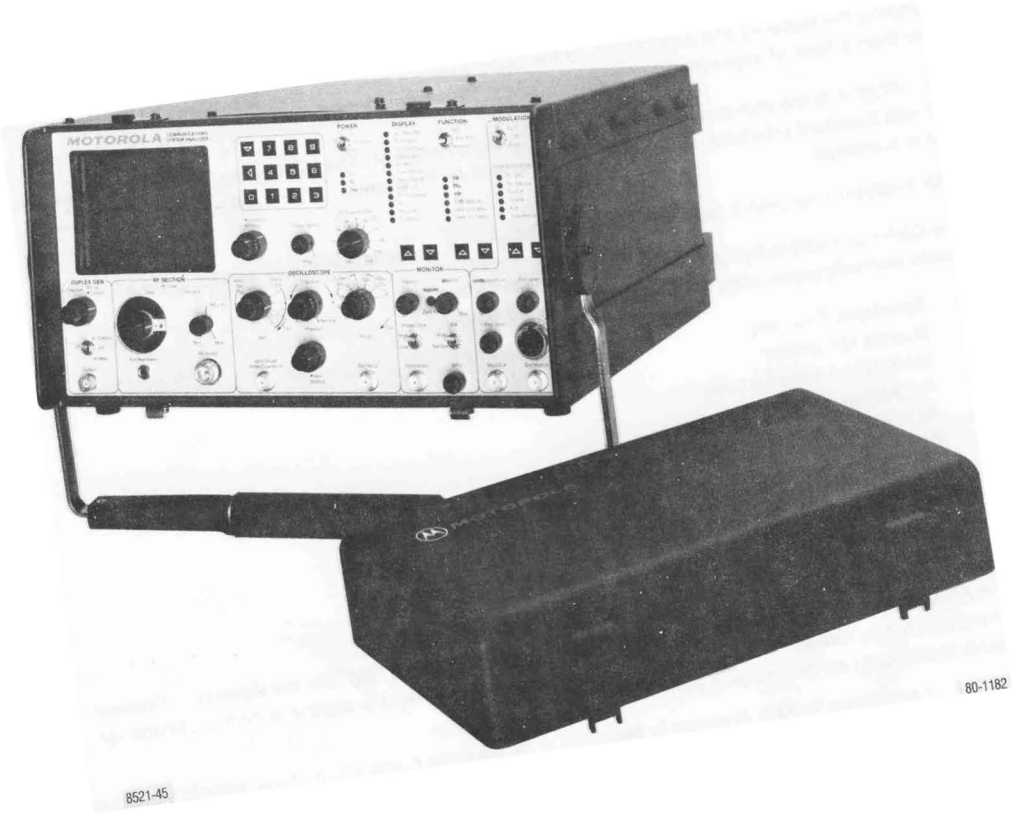

Figure 1-1. Communications System Analyzer

SECTION 1

1-1 INTRODUCTION

1-2 This section lists the physical, electrical, and input/output characteristics of the Communications stem Analyzer shown in figure 1-1.

Table 1-1. Physical Characteristics

Characteristic	Description
Length	20.75 inches (52.7 cm)
Width	15.75 inches (40.0 cm)
Height	8.25 inches (21.0 cm)
Weight	48 pounds (21.9 kg) (Excluding Battery Pack)

Table 1-2. Electrical Characteristics

Characteristic	Description
Signal Generator Mode	
Frequency	
Range	10 kHz to 999.9999 MHz
Resolution	100 Hz
Accuracy	Equal to master oscillator time base
Output (into 50 ohms)	
Attenuator:	16 dB variable plus 10 dB steps over 13 ranges
Range:	0.1 *u* V to 1 Vrms (-127 dBm to +13 dBm)
Accuracy:	±2 dB accuracy on 0 dB step attenuator range ±2 dB across other step attenuator ranges ±1 dB over temperature range
Spectral purity	
Spurious:	<-40dB
Harmonics:	<-15 dB
Frequency modulation	
Range:	0 - 50 kHz peak
Accuracy:	±5% of full scale
FM residual noise:	100 Hz
External/internal frequency range:	5 Hz - 10 kHz (±1 dB)
External input:	Approximately 150 mV for 20 kHz deviation
Modes:	Internal, external, microphone or all simultaneously

Table 1-2. Electrical Characteristics (Continued)

Characteristic	Description
Amplitude modulation	
Range:	0 to 80% from 1 to 500 MHz
Accuracy:	±10% of full scale from 0% to 50% AM
External/internal frequency range:	5 Hz - 10 kHz (±1 dB)
External input:	Approximately 150 mV for 80%, BNC connector
Modes:	Internal, external, microphone or all simultaneously
Double sideband suppressed carrier	
Carrier suppression:	> 25 dB (1 MHz - 500 MHz)
	Monitor Mode
Frequency	
Range:	1 MHz to 999.9999 MHz
Resolution:	100 Hz
Accuracy:	Equal to that of master oscillator time base
Frequency error indicator	Autoranging CRT display. ±10 Hz resolution for frequency error measurements on 1.5 kHz, 5 kHz and 15 kHz full scale ranges. ±1 Hz resolution on the 50 Hz full scale range.
Input sensitivity	1.5 ***ft*** V for 10 dB EIA Sinad (narrow band ±6 kHz mod. acceptance) 7 *fjtV* for 10 dB EIA Sinad (wide band ±100 kHz mod. acceptance) 4 MHz to 1000 MHz. Useable to 1 MHz.
Spurious response	-40 dB typical 0 dB image at ±21.4 MHz -10 dB at L.O. harmonics ±10.7 MHz
Deviation Measurement	
Range:	1, 10, 100 kHz full scale
Accuracy:	±5% of reading ±100 Hz from 500 Hz to 50 kHz deviation; ±10% of reading from 50 kHz to 75 kHz deviation
Peak deviation limit alarm:	Set via keyboard to 100 Hz resolution (0 kHz to 99.9 kHz). Audible alarm indicates limit condition in all Monitor Modes.
AM modulation measurement	
Range:	0 to 100%
Accuracy:	±5% of full scale

Table 1-2. Electrical Characteristics (Continued)

Characteristic	Description
RF Wattmeter (Autoranging display)	
Frequency range:	1 MHz to 1000 MHz
Power range:	1.0 watts to 125 wattts
Accuracy:	±10%, 1 watt to 125 watts
Protection	Over temp indicator
General	
Spectrum Analyzer	
Dynamic range	>75 dB displayed, - 105 dBm to +30 dBm input range with step attenuator
Frequency	
Range	4 MHz to 1,000MHz
Full scale frequency dispersion:	Adjustable between 1 MHz and 10 MHz
Duplex Generator	
Frequency offset	Adjustable from 0 to 10 MHz plus fixed offset of 45 MHz (high or low side)
Modulation level (FM only)	Adjustable from 0 to 20 kHz peak deviation
Oscilloscope	
Size	8 cm x 10 cm
Frequency response	DC to 0.5 MHz (3 dB point)
External vertical input range	10 mV, 100 mV, 1V, 10V (per division)
Sweep rates	**1 *[1*** s, 10 *H* s, 0.1 ms, 1 ms, 0.01S, 0.18 (per division)
Sync	Automatic or normal triggering
Frequency Counter	
Frequency range	**10 Hz to 35 MHz**
Readout	5 digit, autoranging
Input sensitivity	30 mV from 10 Hz to 1 MHz 50 mV from 1 MHz to 35 MHz

Table 1-2. Electrical Characteristics (Continued)

Characteristic	Description
Digital Voltmeter	
Readout	Auto ranging digital display, 1, 10, 100, 300 volts full scale. AC-dBm calibrated across 600 ohms.
DC accuracy	±1% of full scale ±1 **least** significant digit
AC accuracy	±5% of full scale
AC bandwidth	**50 Hz to 10 kHz**
Modulation Source	
Code Synthesizer	
Frequency range	5 Hz to 9.9999 kHz sinewave
Resolution	0.1 Hz
Frequency accuracy	±0.01%
Distortion	<1%
Signaling sequences	Four fixed 1. Tone only 2. Tone with battery saver 3. Tone and voice 4. Group call Four user programmable
Tone remote access	Remote base access sequence as follows Tone A for 150 msec Tone B for 40 msec 10 dB below Tone A Tone A continuously 30 dB below the first Tone A burst
Digital private line (DPL)	Codes 000 to 777 and inverted
Fixed 1 kHz	
Accuracy	Equal to master time base
Distortion	<1%
External input	
Microphone	Standard RTM 4000A microphone interface with IDC.
External Jack	
Frequency range	5 Hz to 10 kHz
Level	7 vrms maximum
Impedance	10 Kohm nominal
Code synthesizer external output level	0-3 vrms into a 600 ohm load
SINAD Meter	
Input level range	0.5V to 10 Vrms
Sinad accuracy	±1 dB at 12 dB Sinad

Table 1-2. Electrical Characteristics (Continued)

Characteristic	Description
Manual Frequency Scan	
Step size Step rate	Switch Selectable: 100 Hz, 1 kHz, 10 kHz, 100 kHz and 1 MHz (+ or-) 5 steps/sec.
Time Base	
Standard TCXO Optional ovenized high stability	Aging: ±1 x 10-° per year Temp: ±1 x 10^{-6} maximum error over the 0° to 55° C temp. range Aging: ±1 x 10^{-6} per year Temp: +5 x 10^{-8} maximum error over the 0° to 55°C temp range (warmup to ±5 x 10^{-7} of final frequency within 20 minutes)
Power and Environmental	
AC DC Optional battery Temperature range	100-130 VAC, 200-260 VAC 47-63 Hz +11.5 VDC to +16 VDC 13.6V battery - provides 1 hour continuous operation 0° to 55°C operating; -40 to 85° C storage

Table 1-3. Input/Output Characteristics

Characteristic	Description
Input	
Ext mod in Mic. Ext Horiz Vert/Sinad/DVM/Counter In	10K ohms nominal, 150 mV typical for 20 kHz dev. FM or 80% AM Mic input provides bias and IDC limiting suitable for Motorola RTM 9000A handset. PTT switches R2001 from monitor to generate. 1 volt minimum for full screen deflection. Maximum input 10 volts. 1 Meg ohm, 40 pf Nominal; ±300 volts DC max, 300 Vrms max at frequencies below 500 Hz, 10 Vrms max up to 35 MHz • Scope vert in: DC to 500 kHz or 50 Hz to 500 kHz AC mode (±3 d8) • Sinad in: 0.5 to 10 Vrms in at 1 kHz

Table 1-3. Input/Output Characteristics (Cont)

Characteristics	Description
	• DVM in: 1, 10, 100 and 300V full scale AC or DC. AC bandwidth 50 Hz to 10 kHz for ±5% F.S. accuracy (AC dBm calibrated across 600 ohms) • Frequency counter in: 30 mV or greater required from 10 Hz to 1 MHz. 50 mV or greater required from 1 MHz to 35 MHz
RF In/Out	50 ohms nominal, 125 watts max (1-1000 MHz) **CAUTION:** The RF In/Out Jack is protected against RF overload. However, to prevent undue stress on the protected circuits it is advisable to always switch the system to the power monitor mode before applying power in excess of 200 mW. Additional protection is also obtained by making it a practice not to leave the step attenuator in the 0 dB position.
Ext Wattmeter	Characteristics suitable for Motorola ST-1200 series Wattmeter Elements
10 MHz std in (rear panel)	70 to 350 mV rms input required at 10 MHz, impedance greater than 50 ohms.
Output	
Mod out	Up to 11 vpp into 600 ohms 10 Hz to 10 kHz
Demod out	Typically 3 vpp into 600 ohms for ±5 kHz deviation narrowband, 4 vpp for ±75 kHz deviation wideband; DC to 10 kHz response
RF in/out	1.0 Vrms (+13 dBm) to 0.1 Vrms (-127 dBm) 50 ohm nominal source impedance. 10 kHz to 1.0 GHz.
Duplex gen out	-30 dBm typical, 50 ohm nominal source impedance 2 MHz to 1 GHz
10 MHz std out (rear panel)	250 mV rms nominal output into 50 ohms

SECTION 2

DESCRIPTION

2-1. DESCRIPTION

2-2. The Communication System Analyzer is a portable test instrument designed for servicing and monitoring of portable, mobile, and land base communications equipment operating over the frequency range of 1 MHz to 1 GHz. The unit performs the functions of signal generation, frequency error and modulation measurement. It is also capable of a variety of tests normally associated with the following devices:

Spectrum analyzer
Duplex offset generator
Modulation oscilloscope
Frequency counter
AC/DC digital-analog voltmeter
RF wattmeter
General purpose oscilloscope
Multi-mode code synthesizer
SINAD meter
Sweep generator

2-3. MICROPROCESSOR. A Motorola M-6800 series microprocessor permits keyboard entry of data, autoranging of displays, fast frequency access, and permanent storage of often-used frequencies and codes. Generate and monitor RF frequencies, tone codes, and timing sequences can be programmed into a nonvolatile memory, saving time and eliminating entry errors. When one particular type of equipment is continuously serviced, the unit can be programmed to select the mode of operation required when first turned on.

2.4 DISPLAY. All functions, generated or monitored, are presented on an 8 cm x 10 cm cathode ray tube (CRT) in both analog and digital format, with the name of the function being displayed. The CRT also displays control settings eliminating the need for operator search of different equipment panels. Digital readouts are visually aided by the use of the continuously autoranging analog line segments, which are similar to a bar graph. Each has a base line and calibration markers, in addition to the intensified segment showing the measurement. The user selectable displays are listed in a column beneath the DISPLAY heading on the front panel. Choosing a display is accomplished by pressing an arrow button below the column, for up or down movement, as required. When the appropriate arrow is pressed, the LED adjacent to the selected display illuminates. FUNCTION is selected in the same way, providing rapid, accurate changes in service capability at the touch of a button.

2-5. SYSTEM WARNINGS. To aid the technician in servicing, visual warnings will appear on the CRT when certain overload or caution conditions exist. Displays warn of low battery power, overheating of the RF load, or an improper attenuator setting for particular measurements. In addition, a continuous audible alarm sounds when a preset deviation limit is exceeded in monitor modes. This limit is entered by using the keyboard and may be programmed from 0 kHz to 99.9 kHz, with 100 Hz resolution.

2-6. FUNCTIONS. The following paragraphs briefly describe the major functions of the Communications System Analyzer.

2-7. AM, FM, CW, DSB Signal Generation. The built-in general purpose signal generator provides continuous coverage of the HF, VHP, and UHF land mobile spectrum for receiver testing. Many forms of external and internal modulation can be simultaneously impressed on the carrier signal for actual composite signals. The frequency range of the RF signal generator is from 10 kHz to 1000 MHz in 100 Hz steps. The output of up to 1 Volt rms provides sufficient amplitude to get through misaligned tuners and receivers, and is especially effective when changing a receiver's frequency. The high level, clean output is available over the entire frequency range of the Communications System Analyzer. The output frequency is referenced to an internal time base which can be calibrated to the WWV Standard. (See paragraph 4-7.)

2-8. Simultaneous Modulation. Modulation is simultaneously available from an internal 1 kHz tone generator, a multi-mode code synthesizer, and from external inputs. The external modulation can be voice from a standard Motorola mobile radio microphone (which plugs into the front panel of the instrument), as well as a signal applied to the external BNC input. Separate controls are provided for independently setting the levels of the 1 kHz tone, the code synthesizer, and the external modulation sources. The 1 kHz test tone is a convenient source of modulation for making Sl NAD measurements. A MOD OUT connector provides external access to all of the modulation signals.

2-9. Modulation Display. The recovered audio waveform, or audio used to modulate the generator carrier, can be viewed on the CRT. It is used to graphically measure deviation, and to aid in waveform analysis.

2-10. Sweep Generation. The sweep generator mode provides an RF output that is swept in frequency across a band centered at the programmed frequency. A synchronized horizontal sweep for the internal oscilloscope allows filter characteristics to be easily determined. This is ideal for in-depth troubleshooting of IF amplifiers and filters.

2-11. SINAD Metering. A comprehensive check of receiver performance can be made with a SINAD measurement. The analog line segment and digital representation of SINAD appear automatically whenever the unit is in the normal generate mode. The only hookups required are from the Communications System Analyzer to the RF input of the receiver under test, and from the audio output of the receiver to the instrument's multipurpose input. The measurement, and appropriate servicing, can then be accomplished withoutthe need for a separate signal generator, SINAD meter or distortion analyzer.

2-12. Multi-Mode Code Synthesizer. The Communications System Analyzer generates Private Line tones (PL), Digital Private Line codes (DPL), two-tone sequential paging codes and tone-remote base signaling tones. All codes are available at the Mod Out jack, as well as being used internally to modulate the RF signal generator. This eliminates the necessity of using separate generators and oscillators for general servicing, setting transmitter deviation, or for checking tone-remote-base control lines. Timing sequences are also stored in the Tone Memory to provide fast set-up and eliminate errors. User programmable timing sequences are also provided to allow the storage of non-standard or future time sequences.

2-13. Off-the-Air Monitor. The 1.5 μV sensitivity of the Communications System Analyzer receiver allows off-the-air monitoring and measurement of transmitter frequency error and deviation to 1000MHz. A variable squelch allows weak signals to be monitored, but can beset higher to ensure the proper signal-to-noise ratio for measurement accuracy. The off-the-air monitor function enables frequent parameter checks without leaving the shop, thus spotting system degradation early and keeping service costs down, Bandwidth can be set Wide for off-channel signal location or wide band FM; or Narrow for maximum sensitivity and selectivity.

2-14. IF Display. When the IF display mode is selected, the Communications System Analyzer's receiver IF envelope is shown on the CRT. This allows the technician **to** qualitatively and quantitatively assess the amplitude modulation envelope of a transmitter.

2-15. Spectrum Analyzer. In this mode of operation the CRT displays a window of the RF spectrum whose bandwidth (from 1 MHz to 10 MHz) is determined by the DISPERSION/SWEEP control. The center frequency of this window ranges from 4 MHz to 1,000 MHz, selectable by entering a specific center frequency with the keyboard. This center frequency is digitally displayed at the top of the CRT screen, eliminating the need for an external signal generator, and counter to provide markers. Once a signal is centered on the screen, positive identification is aided by switching the Analyzer to MONITOR AM or FM and listening to the demodulated output via the built-in audio amplifier and speaker. The spectrum analyzer's center frequency can be scanned up or down at rates varying from 0.5 kHz per second to 5 MHz per second, using the RF scan control. Slow rates are used to precisely determine a subject signal's frequency while faster rates are used for locating intermittent transmissions or viewing large areas of the spectrum in a short time. Uses of the Spectrum Analyzer are: Intermodulation interference identification, IF and RF signal tracing, transmitter harmonics measurements, transmitter spurious checks, and receiver local oscillator radiation.

2-16. RF Burnout Protection. At RF input levels above 200 mW, in any operating mode, the input automatically switches to the internal 125 watt RF load, thus protecting the attenuator and signal generator against damage from a keyed transmitter. If power above 200 mW is applied in any mode except the power monitor mode an audiable alarm sounds and a visual warning on the CRT directs the operator to switch to the power monitor mode.

CAUTION

To prevent undue stress on the protected circuits it is advisable to always switch the system to the power monitor mode before applying power in excess of 200 mW. Additional protection is also obtained by making it a practice not to leave the step attenuator in the 0 dB position.

2-17. Terminated RF Power Measurement. RF power is automatically measured when the Communications System Analyzer is in the Power-Monitor mode. The built-in RF load dissipates up to 50 watts for three minutes and up to 125 watts for one minute. If a high power transmitter should be keyed into the unit for a time long enough to threaten overheating of the power measuring circuitry, the audible alarm sounds and the CRT display changes to read "RF LOAD OVER-TEMP," thus warning the technician to un-key. This instrument function is further enhanced by the simultaneous indication of RF power output, carrier frequency error, and modulation, all on the same CRT display.

2-18. In-Line Power Measurement. Use of the Motorola ST-1200 series Wattmeter elements in conjunction with the analyzer's external wattmeter display provides measurement of forward and reflected antenna power on the CRT display. This capability eliminates the complex hook-ups and the additional instruments normally required for antenna measurements.

2-19. Duplex Generator. In this mode, the Communications System Analyzer simultaneously receives and generates the signals for duplex radio servicing, while generated and monitored frequencies are observed on the CRT. In the 0-10 MHz range, the'Freq. Set'control tunes the proper offset frequency for the VHF and UHF bands. The 45 MHz mode provides a single offset for the 800 MHz range. A switch is also provided to select high or low side offset, as required. The Duplex Generator provides enhanced capability to service equipment such as repeaters, car telephones and Emergency Medical Telemetry portables.

2-20. 500-kHz Oscilloscope. This general purpose scope is ideal for waveform analysis in two-way communication servicing. Use it for viewing modulation signals (either internally or externally generated), detection of asymmetric modulation or audio distortion, and general purpose signal tracing and troubleshooting.

2-21. Frequency Counter. The frequency counter measures inputs in a range from 10 Hz to 35 MHz. Its 5 digit auto-ranging output is displayed on the CRT and allows precise measurement and setting of offset oscillators, 35 kHz and 455 kHz pager IF's, PL frequencies and other external input signals. This function will also operate simultaneously with the generate or monitor receiver modes of operation. Frequency measurement of transmitted carriers and other signals higher than 35 MHz is easily accomplished with the frequency error readout in the monitor modes.

2-22. AC/DC Voltmeter. Switching to the DVM mode provides a digital-analog voltage presentation on the CRT, along with the corresponding dBm value. The auto-ranging display provides full scale deflections of 1, 10, 100 and 300 Volts. AC or DC measurement is selected on the CRT. The meter's wide dynamic range and three digit display are ideal for setting power supply voltages, checking bias levels, and setting audio levels. Like the Frequency Counter, the DVM will operate simultaneously with generate or monitor operation.

2-23. Power Supply. The Communications System Analyzer may be powered by a variety of sources:

- AC at 110 or 220 Volts, 50/60 Hz
- DC from an external 12 Volt source such as a service vehicle
- DC from an optional battery pack. Servicing can thus be accomplished wherever the equipment under test is located

2-24. ACCESSORIES.

2-25. Table 2-1 lists the accessories supplied with the Communication System Analyzer. Optional equipment available for use with the unit is listed in Table 2-2.

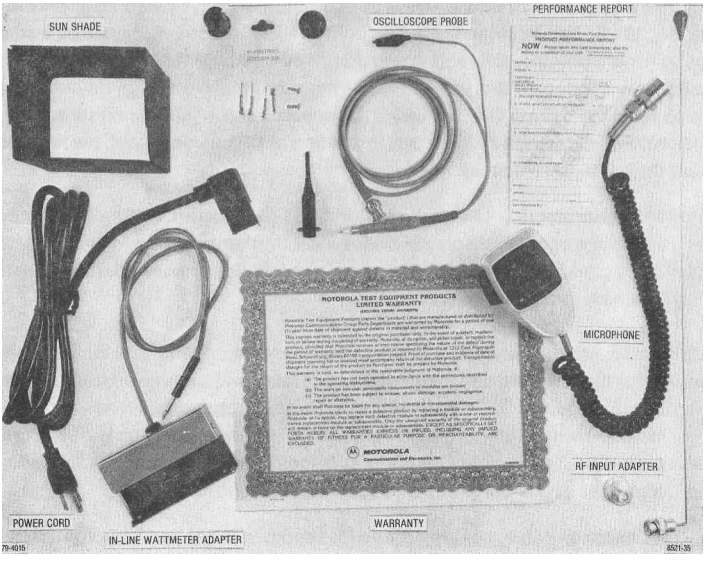

Figure 2-1. Accessories Supplied with Analyzer

Table 2-1. Accessories Supplied with the Communication Systems Analyzer

Equipment	Motorola Part No.	Use
Front cover	15-80335A70	Front panel and CRT protection, storage of cables, power cord, and other equipment for on-sjte servicing.
Sun shade	15-80335A55	Snap over CRT during use in bright sunlight.
Power cord	30-80336A36	Three conductor cord to supply AC power to unit. Also used when charging optional battery pack.
Oscilloscope probe	RTL-4058A	A X1 probe with attachments for general servicing.
In-line wattmeter adapter	RTL-4055A	Allows use of Motorola ST-1200 series in-line watt-meter elements for direct measurement and display of forward and reflected transmitted power.
Coax adapter	58-84300A98	Adapts front panel "N" connector to BNC female.
Antenna	TEKA-24A	Plugs into RF in/out connector on front panel with N to BNC adapter. Used for off-the-air transmitter and receiver tests.
Test microphone	RTM-4000A	Used for voice modulation of signals.
Connector kit	RPX-4097A	Consists of connector shell, clamp, and four connector pins. Used to fabricate a mating plug for male dc power connector at back of analyzer. Enables user to make a dc power cable to inter-connect separate power source to analyzer. Pins 1 and 2 are positive, pin 3 is the charging line, pin 4 is ground.

Table 2-2. Optional Equipment for Use with Analyzer

Equipment	Motorola Part No.	Use
IEEE-488 Standard interface bus option	Consult factory for retrofit information.	Enables fully automatic testing with the unit by external control from a computer or programmable controller.
Blower	RTL-4054A	Provides additional cooling in high ambient temperature conditions

Table 2-2. Optional Equipment for Use with Analyzer (Cont)

Equipment	Motorola Part No.	Use
Battery pack	RTP-1002A	13.6 volt battery and charger attaches to back of the unit. Provides one hour of continuous operation. Cannot be used with IEEE-488 or Blower options.
High-stability oscillator module	RTL-1007A	Improves stability of the time base as specified in electrical characteristics section.
Protective cover	RTL-4056A	Padded fabric type cover to protect unit from excessive field wear.

SECTION 3

INSTALLATION

3-1. PACKING INFORMATION

3-2. The unit is packaged in a fiberboard carton and protected by foam pieces as shown in figure 3-1. The unit is first packed in a cardboard container and then thiscarton is packed in asecond, larger cardboard container, for further protection. Save the packing container and materials for future use.

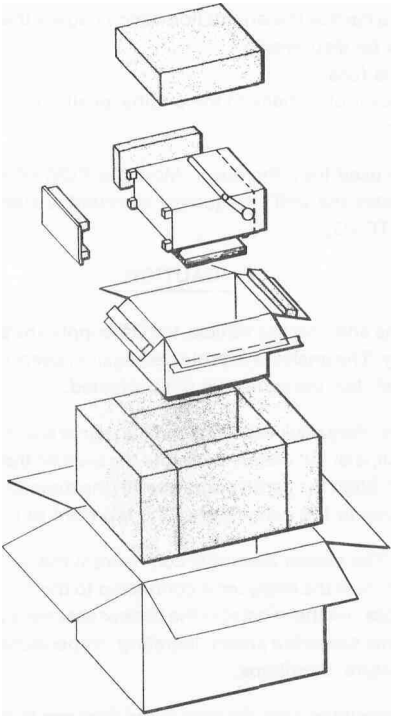

Figure 3-1. Typical Communication System Analyzer Packaging

3-3. All accessories supplied with the analyzer are packed in the analyzer cover.

3-4. INITIAL SETUP

3-5. ANALYZER. To set up the Analyzer for use, place the unit on workbench or in mobile repair unit. Remove the front cover by operating the two latches on the bottom of the cover. Lift the cover and slide it to the side to separate the hinges. Remove the power cord (AC or DC) that is stored in the cover, Attach the female connector of the power cord to the appropriate connector on the rear panel of the analyzer, and the other end to the power source. For AC power a grounded 3 wire power source of 100-130 Vac or 200-260 Vac, 47-63 Hz must be used.

NOTE

The unit is set for 110-130 Vac operation from the factory. For operation from 1 GO-110 Vac or 200-260 Vac, the voltage selection card must be readjusted before connection to the power source. This is accomplished by the following procedure:

1. Remove the power cord from the rear panel connector.
2. Slide the selector card cover door over the connector area exposing the selection card and fuse area.
3. Pull outward on the fuse ejector tab and remove fuse.
4. Remove the printed circuit board voltage selector card by pulling straight to the rear.
5. Reinsert the card at the orientation which causes the appropriate voltage range (marked on card) to be displayed.
6. Reinstall the fuse.
7. Slide the cover plate back to the original position, connect power cord, and proceed with system operation.

Remove the accessories to be used from the cover. Move the POWER switch to the ON position. When the Oven Ready indicator illuminates the unit's frequency standard is stabilized and the unit is ready for use, (instantaneous with standard TCXO).

CAUTION

When installing the analyzer in a vehicle, the DC supply line should be fused close to the vehicle battery. The analyzer is protected against overload by the DC 8A fuse on the rear of the unit, but the vehicle is not protected.

3-6. BATTERY PACK. The battery pack is attached to the rear of the analyzer with two clips and two screws. Align and slide the mounting clips of the battery pack into the slots on the mounting brackets on the left side of the back panel of the analyzer. Align the captive screws with the mounting holes on the right of the panel and tighten. Connect the power plug to the connector at the top right of the rear panel.

3-7. BLOWER ASSEMBLY. The blower assembly comes from the factory wired for continuous operation. That is, the blower will run whenever the analyzer is connected to the AC power line. If thermostatic operation is desired the wire jumper across the thermostat in the blower assembly must be clipped out. The blower will now run only when the back panel exceeds a preset operating temperature. Normally this temperature will only occur in high ambient temperature conditions.

3-8. The blower assembly is mounted onto the rear of the analyzer in the same manner as the battery pack. Align and slide the mounting clips of the blower into the slots of the mounting brackets on the left side of the back panel. Align the captive screws with the mounting holes on the right of the panel and tighten. Connect the power plug to the BLOWER connector on the right side of the rear panel.

SECTION 4

OPERATION

4-1. GENERAL

4-2. This section contains information tor the operation of the Communication System Analyzer.

4-3. CONTROLS, INDICATORS, AND CONNECTORS

4-4. The analyzer controls, indicators, and connectors are shown in Figures 4-1 through 4-3 and listed with their functions in Table 4-1.

Table 4-1. Controls, Indicators, and Connectors

Item	Description	Function
	FRONT PANEL (fig. 4-1)	
Keyboard	Twelve-key pushbutton keyboard	Enters variables into memory/enters manual variables/selects variables to be used from the memory.
V	Line cursor key	Moves the cursor down to the next line that may be changed. Preset permanent entries are skipped. Cursor will move down only. When on last line, will return to top line with next entry.
<l	Horizontal cursor key	Moves the horizontal cursor left to the next entry position that may be changed. When in the last left position, the cursor will move to the far right with the next entry.
0 through 9	Numerical keys	Used to select from the memory a stored value to be used, or to enter directly a value to be used.
• Intensity • Focus	Stacked concentric potentiometers	
	• Intensity - center (small) knob	Controls the intensity of the scope presentation.
	• Focus - outside (large) knob	Controls the focus of the scope presentation.
Dispr/Sweep control	Potentiometer	Controls the frequency span (1-10 MHz) displayed on the CRT when unit is used as a spectrum analyzer. Provides sweep width control when either sweep function (SWP 0.01-1 MHz or SWP 1-10 MHz) is selected.

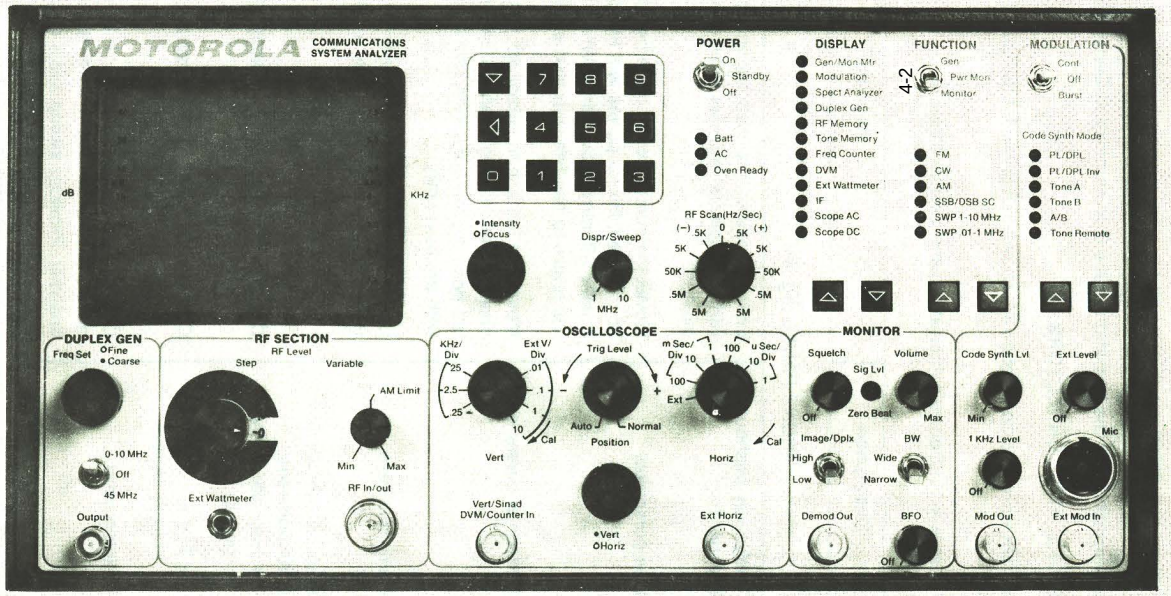

79-3891

8521-15

Figure 4-1. Controls, Indicators, and Connectors, Front Panel

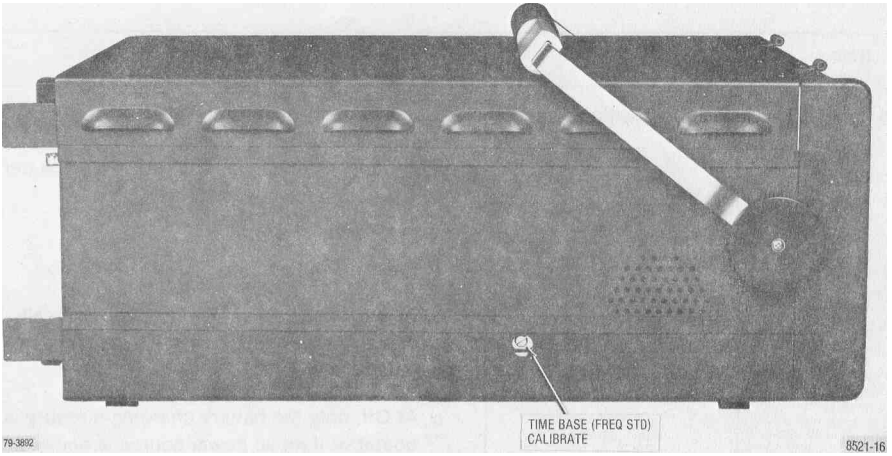

Figure 4-2. Controls, Indicators, and Connectors, Left Side Panel

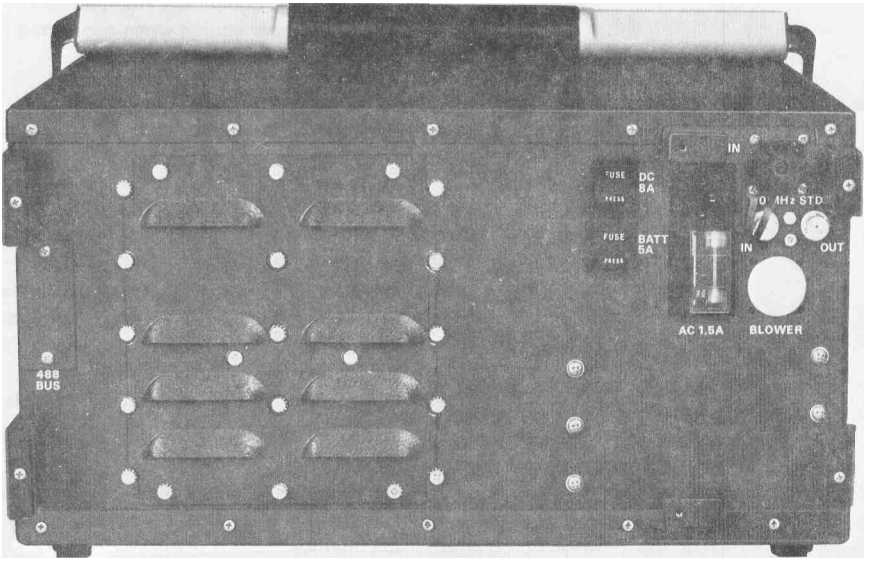

Figure 4-3. Controls, Indicators, and Connectors, Rear Panel

Table 4-1. Controls, Indicators, and Connectors (Cont)

Item	Description	Function
RF Scan (Hz/Sec) switch	Eleven position switch	Allows automatic scan of the generated or the monitored frequency. The switch setting indicates rate of frequency change. The rate is 5 steps per second, with frequency steps of 100 Hz, 1 kHz, 10 kHz, 100 kHz and 1 MHz.
POWER switch	Three-position toggle switch.	a. Energizes all circuitry in the On position. b. At Standby position, removes DC from all circuitry except the frequency standard and battery charger. c. At Off, only the battery charging circuitry is operative if an ac power source is being used.
Batt indicator	LED (red)	Illuminates when equipment is using DC power.
AC indicator	LED (red)	Illuminates when equipment is connected to an ac power source. Position of POWER switch has no effect on indicator. Equipment automatically switches to ac power source when connected to **ac** line voltage.
Oven Ready indicator	LED (red)	Illuminates when optional frequency standard oven has stabilized. Continuously illuminated with the TCXO frequency standard.
DISPLAY indicators	Twelve LEDs (red)	Illuminate one at a time to indicate the function or type of operation the equipment is performing and the information displayed on the CRT. a. Gen/Mon Mtr — In the generate mode the center frequency, output power, and modulation depth of the RF output is displayed. In the monitor mode the center frequency, input power, frequency error, and modulation depth of the received carrier is displayed. b. Modulation — The modulation audio in the generate mode or the demodulated audio in the monitor mode is displayed. c. Spect Analyzer — The spectrum analyzer mode is enabled. The RF spectrum and the operating center frequency is displayed.

Table 4-1. Controls, Indicators, and Connectors (Cont)

Item	Description	Function
		d. Duplex Gen — The duplex generate and monitor frequencies are displayed. The depth of modulation on the generator output or on the received carrier is indicated for the generate and monitor modes respectively. For this display, the function switch only selects which modulation reading is displayed. e. RF Memory — The nine stored RF frequencies or DPL codes with their corresponding PL and the current frequency in use are displayed. f. Tone Memory — The user selectable parameters for the code synthesizer are displayed. These include the tone A and B frequencies, the signaling sequence, and the programming for each of the eiqht sequences available. g. Freq Counter — The frequency of the signal input to the front panel frequency counter jack is displayed. h. DVM — The AC or DC level of the signal at the front panel DVM jack is displayed. The AC or DC mode is selected with the display cursor and the keyboard. The battery voltage is also displayed. i. Ext Wattmeter — The external wattmeter element selected and the forward and reflected power being passed thru that element are displayed. The element select is changed by entering the appropriate range number with the keyboard. j. IF — The 455 kHz IF signal from the monitor ' receiver is displayed. k. Scope AC — The voltage waveform applied to the front panel vertical input is displayed. The vertical input is AC coupled. l. Scope DC — The voltage waveform applied to the front panel vertical input is displayed. The vertical input is DC coupled.
FUNCTION switch	Three-position toggle switch	Controls the function of the equipment. The mode is shown by the LEDs. a. Gen - equipment generates and outputs an RF signal.

Table 4-1. Controls, Indicators, and Connectors (Cont)

Item	Description	Function
		b. Pwr Mon - equipment monitors input signals with the input terminated into the internal **power** meter. This position must be used for **inputs of 0.2 watts and greater.** c. Monitor - equipment monitors input signals with the input terminated into the receive mixer. This position is used for "off the air" monitoring.
FUNCTION indicators	Six LEDs (red)	Indicates the mode or type of signal the equipment is set up to monitor or generate: a. FM - equipment generates or monitors frequency modulated signals. b. CW - equipment generates an unmodulated RF signal. Monitor CW provides frequency error measurement only. c. AM - equipment generates or monitors amplitude modulated signals. d. SSB/DSBSC - equipment generates a double sideband suppressed carrier signal. NOTE: The level of the DSBSC signal generated is not calibrated, it is for use in relative measurements only. Monitor SSB mode receives SSB signals with the use of the BFO. e. SWP 1-10 MHz - equipment generates a swept RF signal having a sweep width of 1 to 10 MHz, controlled by the Dispr/Sweep control. Selection of Monitor Sweep has no effect, equipment remains in generate mode. f. SWP 0.01-1 MHz - equipment performs as in e. above except the sweep width limits are 0.01 MHz to 1 MHz.
MODULATION SWITCH	Three position' switch	Controls the Code Synthesizer modulation source. Code Synthesizer mode is shown by the LEDs. a. Cont - Continuous modulation signal output.

Table 4-1. Controls, Indicators, and Connectors (Cont)

Item	Description	Function
FRONT PANEL (fig. 4-1) (Cont)		
		b. Off - Turns off signal. When the mode is DPL or DPL Inv, returning the switch to Off from Cont produces a 133 Hz tone burst for a 120 ms duration. c. Burst - For PL, tone A, and tone B modes the output is present for as long as the switch Is held in the burst position. For the A/B mode the burst position causes a single signaling sequence to be output. For the DPL and DPL Inv modes the Burst position causes a 133 Hz tone to be output. For the Tone Remote mode either the Burst or the Cont position causes a tone remote access sequence to be output. The access sequence leaves tone A at a low level for transmit-type commands until the switch is returned to the Off position. This switch is spring loaded to return to the Off position from the Burst position.
CODE SYNTH Mode indicators	Six LEDs (red)	When illuminated, indicates the selected mode of the Code Synthesizer. a. PL/DPL Indicator PL - Selected Private Line frequency output to 1 kHz DPL - Selected Digital Private Line code output Maximum code number is 777. b. PL/DPL Inv indicator PL - Same as above DPL - Inverted output of selected Digital Private Line code. Maximum code number is 777. The Private Line frequency or the Digital Private Line code is selected from the RF memory display or entered from the keyboard on the Gen Mon Mtr display. c. Tone A indicator Indicates Tone A selected for output d. Tone B indicator Indicates Tone B selected for output

Table 4-1. Controls, Indicators, and Connectors (Cont)

Item	Description	Function
		e. A/B indicator Indicates Tone A/Tone B signaling sequence will be output. See Tone Memory Table example, figure 4-9. f. Tone Remote indicator Indicates access sequence for Motorola Repeater will be output. Tone A and B frequencies are entered from the keyboard on the Tone Memory Display.
DISPLAY select switches	Two-pushbutton switches	Selects the function to be displayed by the equipment, as indicated by the DISPLAY LEDs, a. ^ - moves the selection up one step at a time b. V - moves the selection down one step at a time
FUNCTION select switches	Two-pushbutton switches	Selects the type or mode of signal the equipment will generate or monitor as indicated by the FUNCTION LEDs. Operation is the same as for the DISPLAY select switches.
Code Synth Mode select switches	Two-pushbutton switches	Selects the Code Synthesizer output mode as indicated by the CODE SYNTH MODE LEDs. Operation is the same as for the DISPLAY select switches.
Code Synth Lvl control	Potentiometer	Controls the level of Code Synthesizer for modulation or MOD Output.
Ext Level control	Potentiometer/switch	Controls modulation level of external input (microphone and other external generators). Switch at full counterclockwise position disables external modulation inputs.
Mic connector	4-pin connector	Microphone input. Provides microphone bias and PUSH TO TALK (GENERATE) connection to equipment.
Ext Mod In connector	BNC connector	External modulation signal input.
1 kHz Level control	Potentiometer/switch	Internal 1 kHz tone modulation level control. Switch at full counterclockwise position disables **1 kHz modulation tone.**

Table 4-1. Controls, Indicators, and Connectors (Cont)

Item	Description	Function
Mod Out connector	BNC connector	Output connector for all modulation signals (all signals combined).
Volume control	Potentiometer	Controls speaker output level.
BW switch	Two-position switch	In either Pwr Mon or Monitor modes selects IF bandwidth. NB is ±6 kHz mod acceptance bandwidth. WB is ±100 kHz mod acceptance bandwidth. In Gen FM mode selects modulation range. 0-25 kHz dev in NB mode or 0-100 kHz dev in WB mode.
BFO control	Potentiometer/switch	BFO on/off and beat frequency control for sideband reception. Full Counterclockwise position is off. NOTE: To minimize interference the BFO should be turned off when not in use.
Sig Lvl/Zero Beat indicator	LED (red)	Flashes at a rate equal to the difference between the received carrier frequency and the programmed frequency. Also is used as a squelch indicator.
Squelch control	Potentiometer	Adjusts squelch threshold level, full counter-clockwise position disables squelch. NOTE: Monitor sensitivity is greatly decreased (for high-level use) as the control is increased clockwise beyond the quieting point.
Image/Dplx switch	Two-position switch	In duplex generation mode, controls the duplex frequency output for above (High) or below (Low) the receive programmed frequency. In the monitor mode it selects the frequency of the local oscillator injection above or below the programmed monitor frequency to remove image interference.
Demod Out connector	BNC connector	Receiver audio output.
Oscilloscope Horiz switch	Seven-position rotary switch	When in the oscilloscope mode, selects the horizontal sweep rate or selects the external horizontal input.

Table 4-1. Controls, Indicators, and Connectors (Cont)

Item	Description	Function
Horiz Vernier control	Potentiometer	Horizontal sweep rate Vernier or external horizontal input gain Vernier. Calibrated position Is fully clockwise.
Ext Horiz	BNC connector	Allows external horizontal inputs for oscilloscope.
Trig Level	**Stacked concentric** potentiometer **and** switch	Selects oscilloscope trigger level and trigger mode. Center knob selects the level of trigger. Outside (largest) knob controls the trigger mode. In Auto position, continuous sweep with no vertical input signal, syncs on vertical input. Normal position, no sweep unless vertical input is present, syncs on vertical input.
Position controls	Stacked concentric controlled potentiometer	Controls the position of the CRT display, when in the oscilloscope mode.
• Vert	Center (small) control knob	Controls the vertical position of the CRT display
• Horiz	Outside (large) control knob	Controls the horizontal position of the CRT display
Vert switch	Four-position rotary switch	Oscilloscope operation uses values marked **to** the right of the switch, indicating volts per division on the CRT. Values marked to the left of the switch are used during modulation display mode, indicating range for calibrated FM deviation. NOTE: Frequency Counter sensitivity is also controlled by this switch.
Vert Vernier control	Potentiometer	Vernier gain control for vertical inputs to the CRT when in the oscilloscope mode. Fully clockwise is the calibrated position.
Vert/Sinad/DVM/ Counter In connector	BNC connector	Signal input to the equipment for the following operations: a. External vertical for oscilloscope operation b. SINAD Meter c. Frequency Counter d. Digital Voltmeter

Table 4-1. Controls, Indicators, and Connectors (Cont)

Item	Description	Function
Type N connector	RF In/out connector	RF input in the power monitor or monitor mode, RF output in the generate mode.
Potentiometer	RF Level Variable control	Vernier control of RF output level. Exceeding the AM limit marking in AM generation mode may result in a distorted output.
14-position ganged atten and switch -	RF Level Step switch	Ten dB per step control of RF output level in generate mode. Also serves as RF input level step attenuator in monitor and spectrum analyzer modes.
Ext Wattmeter	Connector	Allows input from Motorola ST-1200 series in-line wattmeter elements for measurement and CRT display of forward and reflected trans-mitted power.
Freq Set controls	Stacked concentric potentiometers	Controls the duplex generator output frequency in the Duplex Generation mode.
• Coarse	Inside (small) control knob	Coarse frequency control.
• Fine	Outside (large) control knob	Fine frequency control.
Frequency offset control (0-10 MHz/Off /45 MHz)	Three-position switch	Selects the offset of the transmitted frequency from the selected receive frequency (Image/ Dpix switch determines side of selected frequency the offset will be). 0-10 MHz position allows frequency offset to be varied between 0-10 MHz. In the 45 MHz position the offset Is variable over a small range around 45 MHz with the use of the Fine frequency control.
Output connector	BNC connector	Output connector for duplex generator output.
SIDE PANEL (fig. 4-2)		
Frequency Standard control	Potentiometer	Allows calibration of the time base frequency (freq std)
REAR PANEL (fig. 4-3)		
BATT 5A	Line fuseholder (5 amp)	Battery charger output line fuseholder.
DC8A	Line fuseholder (8 amp)	DC Input line fuseholder

Table 4-1. Controls, Indicators, and Connectors (Cont)

Item	Description	Function
DC IN power connector	4-pin connector	Connects to DC prime power source
AC power connector	3-pin connector	Connects to AC prime power source. Internally patched to accommodate either 100-110 VAC, 110-130 VAC, 200-220 VAC or 220-260 VAC.
AC 1.5A	Line fuseholder	AC line fuseholder.
10 MHz std IN connector	BNC connector	Provides for external 10 MHz time base input. Equipment automatically switches to external time base with an input at this connector.
10 MHz std OUT connector	BNC connector	Provides an output of the internal or external 10 MHz time base for external use.
488 BUS connector		Placement of I/O connector when IEEE-488 Interface Bus option is provided.
Blower power connector		Placement of Blower power connector, when Blower option is provided.

4-5. OPERATION

4-6. The operator may use the CRT display to become familiar with the functions the Communication System Analyzer is capable of performing. The unit may be preset to any of the functions the unit performs. As a function and its parameters are selected they are displayed on the CRT.

The unit contains a nonvolatile memory that stores frequently used data for fast access, reducing setup time. As a function is selected, if data for that function is stored, the data is displayed on the CRT.

One of the stored parameters may be used or the user may manually select (keyboard entry) the parameters required for the function. Selection of stored data or keyboard entry of data is cursor controlled. As a control is changed the CRT display changes to reflect the new parameter being used or function being performed.

4-7. CALIBRATE. The Communication System Analyzer may be calibrated to WWV or other time/frequency standards (figure 4-4). To calibrate the unit's time base (frequency standard) proceed as follows:

a. Connect antenna to RF In/Out connector.

b. Set FUNCTION switch to Monitor and DISPLAY to Gen/Mon Mtr.

c. Enter frequency of time/frequency standards station directly from keyboard.

d. Select AM function.

e. Using a tuning tool, adjust time base frequency calibration control (on left side of housing) until CRT frequency error display indicates less than 5 Hz error. Frequency settability to 0.5 part per million can thus be achieved using a 10 MHz frequency standard station.

NOTE

The time base output is also available on the rear panel for external measurement or laboratory calibration to better than the 0.5 ppm achievable with the above method.

NOTE

An external time base input is also provided on the rear panel.

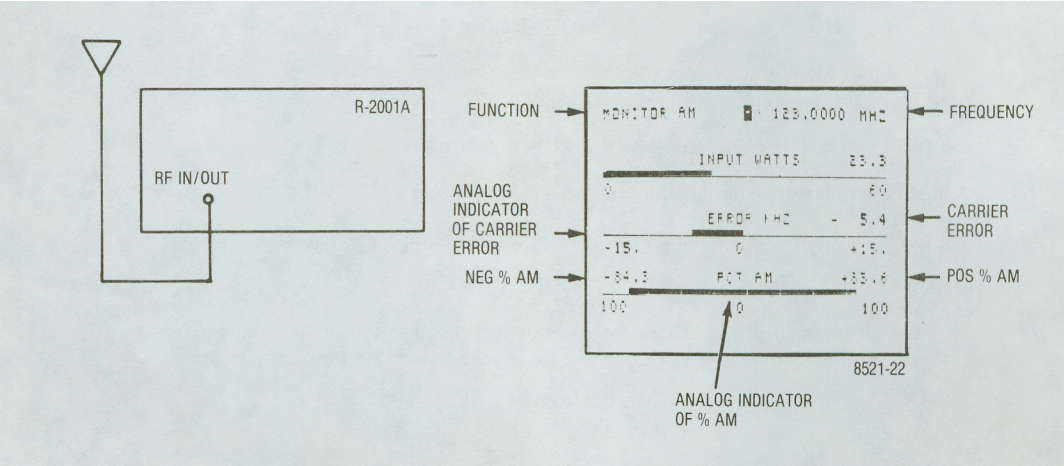

Figure 4-4. System Analyzer Time Base Calibrate Test Setup and CRT Display

4-8. GENERATOR OPERATION. The system generates RF frequencies for FM, AM, CW, SSB, and DSBSC types of transmission covering a range of 10 kHz to 1000 MHz. To generate a signal the FUNCTION switch is placed in the Gen. position.

NOTE

An RF protection circuit to protect against damage due to inadvertent application of RF power to the unit, when in a generate or sensitive monitor mode, is functional over the full monitor frequency range of the equipment (2 to 1000 MHz).

The type of signal is selected using the FUNCTION select LED indicator column. The unit can deliver an output of up to 1 volt into 50 Ohms. When in the AM generate mode the variable control (located in the RF SECTION on the front panel) should not be set above the AM limit mark. Exceeding this may cause distortion in the output.

NOTE

The RF protect circuit may trip if generator is run at full power output without having a 50-ohm load connected.

4-9. DUPLEX GENERATION. When operating in the duplex generate mode the offset frequency can be set to either 45 MHz or 0 to 10MHz (adjustable). The Image/Dplx switch sets the offset frequency above (high) or below (low) the monitored frequency. When offset is in the 0 to 10 MHz range, the control range may include a foldback region. If the generator is operated in this foldback area erroneous frequency output indications can be given. Avoid areas where backward indication or a jittering display of the offset frequency are incurred. The following is an example of the duplex generator being used to setup repeater levels.

a. Connect DUPLEX GEN output to repeater receiver antenna input and repeater transmitter signal sample to RF In/Out connector. The Duplex Gen Output level is fixed at -30 dBm nominal.

b. Set FUNCTION switch to Gen and DISPLAY to Duplex Gen.

c. Select Duplex Monitor frequency (repeater transmit frequency) from memory table or enter directly from keyboard.

d. Set DUPLEX GENERATOR frequency to repeater receiver frequency.

e. Adjust PL and test tone deviation to desired level on display.

f. Set FUNCTION switch to Monitor and measure the deviation of the repeated signal.

NOTE

Switch function to power monitor and connect repeater transmitter (under 125 watts) directly to the RF In/Out connector to read power and frequency error, as well.

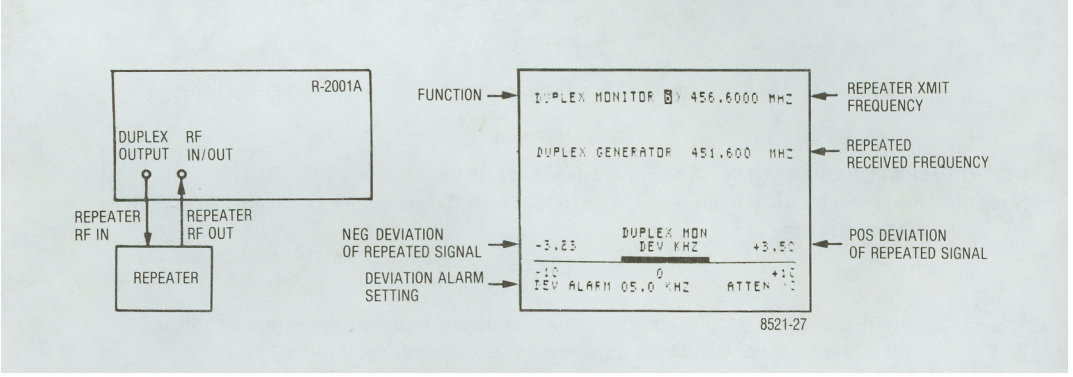

Figure 4-5. Duplex Generation Test Setup and CRT Display

4-10. FREQUENCY COUNTER. The frequency Counter measures inputs in a range from 10 Hz to 35 MHz. The input to the frequency counter is through the Vert/Sinad/DVM/Counter in, BNC connector (located in the OSCILLOSCOPE section of the front panel). The counter sensitivity is controlled by the scope Vert switch. The following shows the minimum sensitivity for each switch setting:

Switch setting	Sensitivity
0.01	50 mV RMS
0.1	500 mV RMS
1.0	5V RMS
10.0	50V RMS

The autorange output of the counter is displayed on the CRT to a resolution of 0.1 Hz or 5 digits.

NOTE

Do not connect transmitter directly to the frequency counter input. Instead use the RF In/Out connector and the frequency error meter for transmitter frequency measurements.

4-11. SPECTRUM ANALYZER. Input to the spectrum analyzer is through the RF In/Out connector. Select the spectrum analyzer position on the DISPLAY column. Place the FUNCTION switch in the monitor position. Select the desired width of sweep by the Dispr/Sweep control. The center frequency is selected from the memory or entered directly from the keyboard, it is displayed at the top-right of the CRT. The following is an example of locating the frequency of an incoming signal with the spectrum analyzer.

a. Connect antenna to RF IN/OUT connector.

b. Set FUNCTION switch to Mon. and DISPLAY to Sped. Analyzer.

c. Select center frequency from memory table or enter directly from keyboard.

d. Adjust Disp/Sweep control for desired spectrum span.

e. Adjust Step attenuator \f required to reduce sensitivity.

f. To determine whether a given displayed signal is valid or being internally generated, flip the Image/Dplx switch to the opposite position. If signal moves in frequency or disappears, it then/represents an internally generated spurious response or received image.

g. Use the RF Scan control to move desired signal to center of the screen. If the signal is located to the right of screen center line, move the RF Scan control clockwise into one of five positive stepping modes. If the signal is to the left of screen center line, turn the RF Scan control counter clockwise to one of five negative stepping modes.

h. Adjust Dispr/sweep.control fully counterclockwise for 1 MHz spectrum span.

i. Again use RF Scan to recenter signal on screen.

j. Set DISPLAY to Qen/Mon Mtr.

k. Now adjust the RF scan control to minimize any existing frequency error between the incoming signal and the Monitor frequency.

The frequency indicated at the top of the screen is now that of the desired incoming signal. It can also be monitored for call signs, etc.

NOTE

The spectrum analyzer is functional but uncalibrated for level measurements in Power Monitor mode for transmitter testing with the built-in 125 watt 50 ohm load. (Observe "RF LOAD OVERTEMP" warning for high power levels or extended periods of use.)

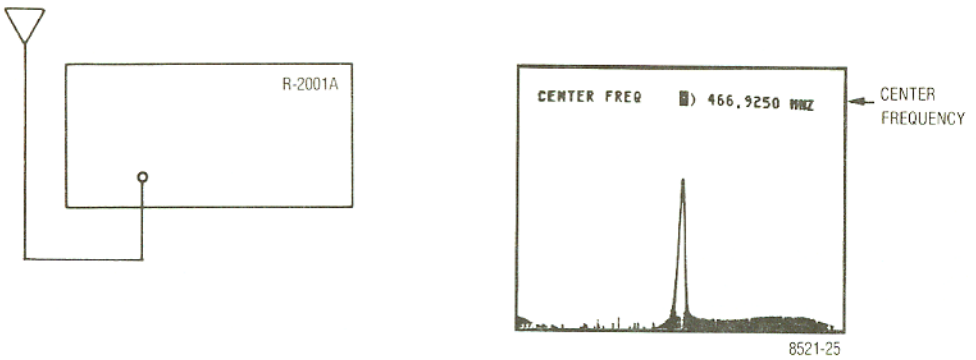

Figure 4-6. Spectrum Test Setup and CRT Display

4-12. MONITOR. The analyzer is capable of monitoring the same frequencies that it generates (para 4-9). Select Gen/Mon Mtr in the DISPLAY column and the modulation type in the FUNCTION column. Set the FUNCTION switch to the Monitor position for small signal samples or off the air monitoring. For high power signal monitoring (0.2w to 125w), set the FUNCTION switch to Pwr Mon.

CAUTION

To prevent undue stress on the protected circuits it is advisable to always switch the system to the power monitor mode before applying power in excess of 200 mw. Additional protection is also obtained by making it a practice not to leave the step attenuator in the 0 dB position.

NOTE

High-powered equipment in the 1-30 MHz range, which has unusually fast carrier rise times, may damage the system analyzer with repeated activation of the protect circuit. Ensure the FUNCTION switch is in the Pwr Mon position (this enables the protect circuit) before RF power is applied to the equipment.

In the monitor mode the CRT displays the type of signal being monitored, the selected frequency, power, error of the received frequency, and the modulation level.

4-13. EXT WATTMETER. When the analyzer DISPLAY is set to the Ext Wattmeter mode and the Motorola RTL-4055A in-line wattmeter adapter (supplied) is connected to the Ext Wattmeter jack the analyzer measures both forward and reflected power. The power rating of the wattmeter elements (Motorola ST-1200 series"), to be used, are displayed on the CRT. The following is an example of a test setup for external wattmeter operation. Figure 4-7 shows the test set connections and CRT display.

a. Select the EXT Wattmeter function by means of the arrow keys located below the DISPLAY column.

b. Plug the connector of the RTL-4055A In-Line Wattmeter adaptor into the "Ext-Wattmeter" jack located on the RF SECTION of the front panel.

c. Using the keyboard; enter the single digit which corresponds to the full scale power rating of the ST-1200 series element you plan to use.

d. Place the ST-1200 element In the In-Line Wattmeter adaptor and install element/adaptor assembly into transmission line.

NOTE

Arrow on In-Line Wattmeter Adaptor must point in the forward direction of the desired rf power flow through the adaptor.

e. Key transmitter and observe magnitudes of forward and reflected power as displayed simultaneously on the 2 analog meter bars and corresponding digital readouts.

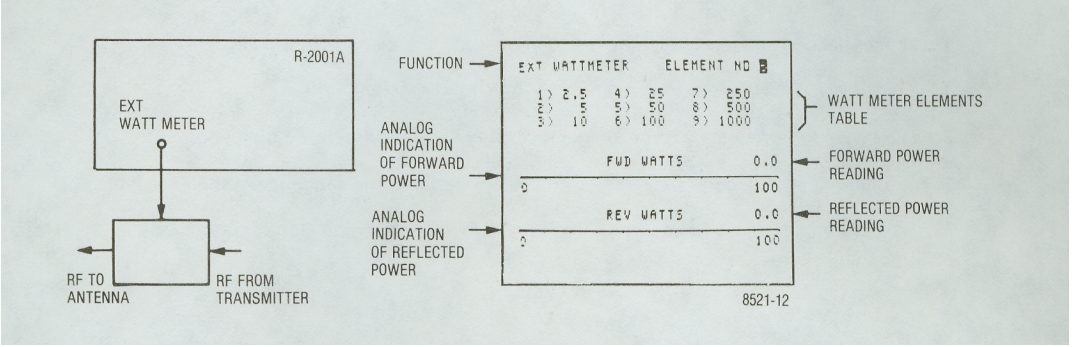

Figure 4-7. Wattmeter Test Setup and CRT Display

4-14. SIMULTANEOUS GENERATE AND MEASUREMENT OPERATIONS. The following test setups and CRT displays are examples of simultaneous generating and measurement operations.

a. FM Mobile radio setup for receiver sensitivity using Generator and SINAD meter.

1. Connect RF In/Out to mobile radio antenna connector and multipurpose measurement (SINAD) input to receiver audio output.

'Contact your Motorola Parts Source for ordering separately.

2. Set FUNCTION switch to Gen. and DISPLAY switch to Gen/Mon Mtr.

3. Select frequency from RF memory table or enter directly from keyboard.

4. Adjust 1 kHz level for 3.0 kHz deviation and RF level for 12 dB SINAD indication. (The mobile radio audio output may be set to the desired level using the DVM AC mode.)

5. Read receiver SINAD sensitivity in microvolts or dBm.

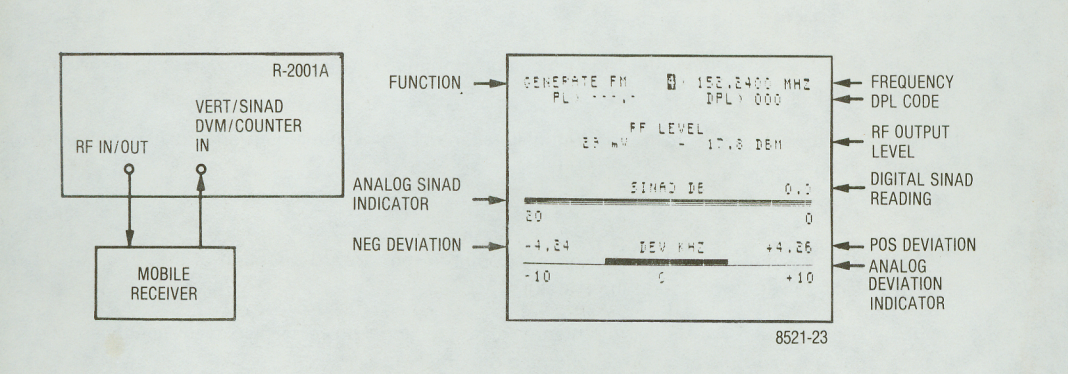

Figure 4-8. Test Setup for FM Receiver Sensitivity Using Generator and SINAD Meter with CRT Display

b. Test pager decode and alert function, and demonstrate simultaneous modulation.

1. Set FUNCTION switch to Gen and DISPLAY to Tone Mem.

2. Select pager frequency from RF memory table or enter directly from keyboard.

3. Enter pager tone code frequencies and select desired time sequence in memory table.

4. Activate and adjust Code Synth. Lvl. for 3.3 kHz deviation on Gen/Mon Mtr. display. (5 kHz system)

NOTE

Timing sequences 1 through 4 are preset and can not be changed. Timing sequences 5 through 8 are keyboard programmable for testing other pager types, upper and lower timing limits, or future schemes.

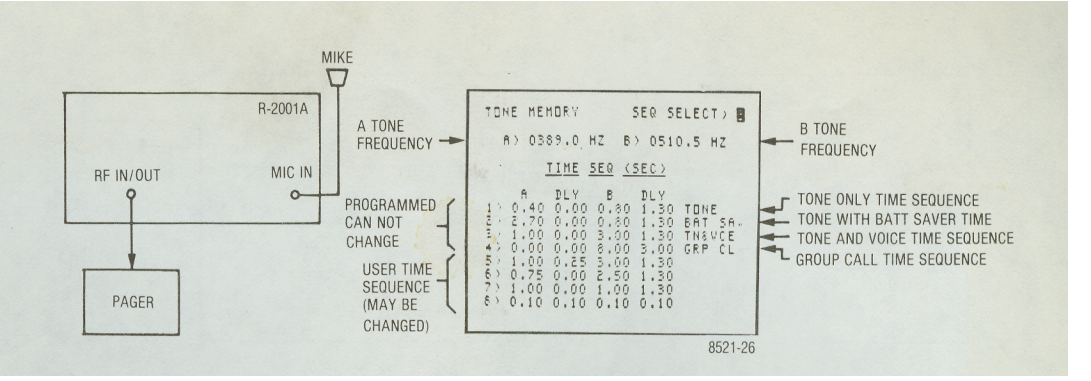

Figure 4-9. Test Setup for Pager and Alert Functions with CRT Display

c. Troubleshooting Receiver audio stages using "DVM and Signal Generate" function simultaneously.

1. Select the DVM function by means of the arrow keys located below the DISPLAY column.

2. Using the keyboard "down" arrow position the CRT cursor adjacent to the "DVM Mode" graphics.

3. Enter a "1" via the keyboard to select AC voltage measurement or a "2" for DC voltage measurement selection.

   Set up the desired on-channel RF signal to provide an input to the receiver.

   Set Function switch to "Gen". Set appropriate RF output level (as indicated on the CRT screen).

   Apply test signals from the receiver audio stages to the instrument's "Vert/Sinad DVM/Counter In" input. DC Voltage measurement points are also applied to this same input. The supplied XI test probe may be used.

   Refer to the CRT screen for an auto-ranging and analog/digital indication of either DC voltage or AC voltage and corresponding dBm level.

NOTE

The AC DVM indication of dBm is referred to 600 ohms.

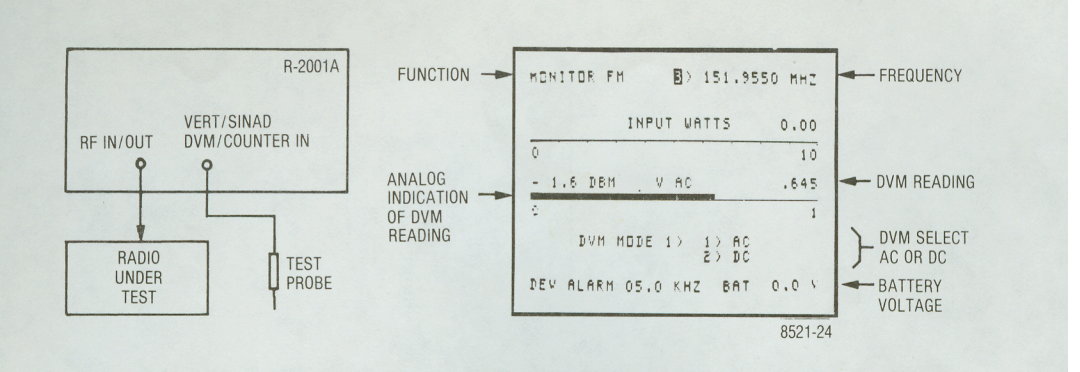

Figure 4-10. Test Setup for Using DVM and Signal Generate with CRT Display

SECTIONV

MAINTENANCE

5-1. SERVICE

5-2. The Motorola Test Equipment Repair Center is charged with the service responsibility for all test equipment supplied by the Motorola Communications Group. The center maintains a stock of original equipment replacement parts and a complete library of service information for all Motorola test equipment.

5-3. Most in-warranty repair are performed at the center. Exceptions include repairs on some equipment not manufactured by Motorola which are performed by the original supplier under the direction of the Test Equipment Repair Center. Out-of-warranty service is performed on a time and materials basis at competitive rates and the maximum turn-around goal is less than ten working days. Customer satisfaction is continually surveyed by reply cards returned with repaired instruments.

5-4. The Test Equipment Repair Center also provides a convenient telephone troubleshooting service. Frequently, a user technician can troubleshoot a piece of equipment and isolate defective components under the direction of the Test Equipment Repair Center via telephone. Required replacement parts are then immediately shipped to the user thereby reducing shipping time and servicing costs. For telephone troubleshooting contact the Test Equipment Repair Center toll free at (800) 323-6967.

5-5. All other inquiries and requests for test equipment calibration and repairs should be directed to the Area Parts Office. They will contact the Test Equipment Repair Center, process the necessary paperwork and, if necessary, have the Center contact you to expedite the repair.

5-6. REPLACEMENT PARTS ORDERING

5-7. Motorola maintains a number of parts offices strategically located throughout the United States. These facilities are staffed to process parts orders, identify part numbers, and otherwise assist in the maintenance and repair of Motorola Communications products.

5-8. Orders for all replacement parts should be sent to the nearest area parts and service center listed below. When ordering replacement parts the complete identification number located on the equipment should be included.

5-9. ADDRESSES

5-10. General Offices

MOTOROLA INC.
Communications Division Parts Dept.
1313 E. Algonquin Rd.,
Schaumburg, Illinois 60196
Phone: 312-397-1000
Executive Offices: 1301 E. Algonquin Rd.,
Schaumburg, Illinois 60196

5-11. U.S. Orders

WESTERN AREA PARTS
1170 Chess Drive, Foster City,
San Mateo, California 94404
Phone: 415-349-3111
TWX: 910-375-3877

MID-ATLANTIC AREA PARTS
7230 Parkway Drive
Hanover, Maryland 21076
Phone: 301-796-8600
TWX: 710-862-1941

EASTERN AREA PARTS
85 Harristown Road
Glen Rock, New Jersey **07452**
Phone: 201-447-4000
TWX: 710-988-5602

SOUTHWESTERN AREA PARTS
3320 Belt Line Road
Dallas, Texas 75234
Phone: 214-241-2151
TWX: 910-860-5505

GULF STATES AREA PARTS
8550 Katy Freeway
Houston, Texas 77024
Phone: 713-932-8955

MIDWEST AREA PARTS
1313 E. Algonquin Rd.
Schaumburg, Ill. 60196
Phone: 312-576-7322
TWX: 910-693-0869

EAST CENTRAL AREA PARTS
12995 Snow Road
Parma, Ohio 44130
Phone: 216-267-2210
TWX: 810-421-8845

PACIFIC SOUTHWESTERN AREA PARTS
9980 Carroll Canyon Road
San Diego, California 92131
Phone: 714-578-2222
TWX: 910-335-1634

SOUTHEASTERN AREA PARTS
5096 Panola
Industrial Blvd.,
Decatur, Georgia 30032
Phone: 504-981-9800
TWX: 810-766-0876

5-12. Canadian Orders

CANADIAN MOTOROLA ELECTRONICS COMPANY
Parts Department
3125 Steeles Avenue
East Willowdale, Ontario
Phone: 516-499-1441
TWX: 610-492-2713
Telex: 02-29944LD

5-13. All Countries Except U.S. and Canada

MOTOROLA INC., OR MOTOROLA AMERICAS, INC.
International Parts
1313 E. Algonquin Road,
Schaumburg, Illinois 60196 **U.S.A.**
Phone: 312-397-1000
TWX: 910-693-1592 or 1599
Telex: 722433 or 722424
Cable: MOTOL

5-14. MAJOR ASSEMBLIES

5-15. The Communication System Analyzer is designed for ease of maintenance. Most of the circuitry is on seven plug-in circuit boards. A list of all subassemblies is given in table 5-1. The assembly locations are shown in figures 5-1 and 5-2.

Table 5-1. List of Subassemblies

Ref. Des.	Item	Part Number As Labeled	Replacement Order Part No.
A1	Low Voltage Power Supply Module	01-P00422N001	RTP-1000A
A2	Scope Amplifier Module	01-P00413N001	RTC-4007A
A3	Scope/DVM Control Module	01-P00409N001	RTC-4008A
A4	Receiver Module	01-P00389N001	RTL-1002A
A5	Synthesizer Module	01-P00385N001	RTC-1001A
A5A*	Digital Synthesizer Card	01-P00358N001	RTC-4009A
A5B*	RF Synthesizer Card	01-P00386N001	RTC-4010A
A6	Audio Synthesizer Module	01-P00426N001	RTC-4011A
A7	Processor Input/Output Module	01-P00405N001	RTC-4012A
A8	IEEE Bus Module (Optional)	01-P00430N001	RTC-4013A
A9	Microprocessor/Character Generator Module	01-P00401N001	RTC-4014A
A10	High Voltage Power Supply Module	01-P00417N001	RTP-1001A
A11	RF Input Module	01-P00394N001	RTC-1002A
A11A1*	Protection/Power Meter Card	01-P00400N001	RTL-4061A^
A11A2*	Converter/Wide Band Amplifier Card	01-P00398N001	RTC-4015A(-
A11A3*	Offset Generator Card	01-P00399N001	RTC-4016A^)
A12	Front Panel Interface Module	01-P00421N001	RTL-4045A
A13	Frequency Standard Module	01-P00368N001	RTL-1004A
A14	Front Panel Assembly	01-P00366N001	01-80304A42
	Motherboard Assembly	01-P00441N001	RTL-4060A

'These items are solder-in submodules listed for reference purposes. These cards are not normally repaired or replaced individually.

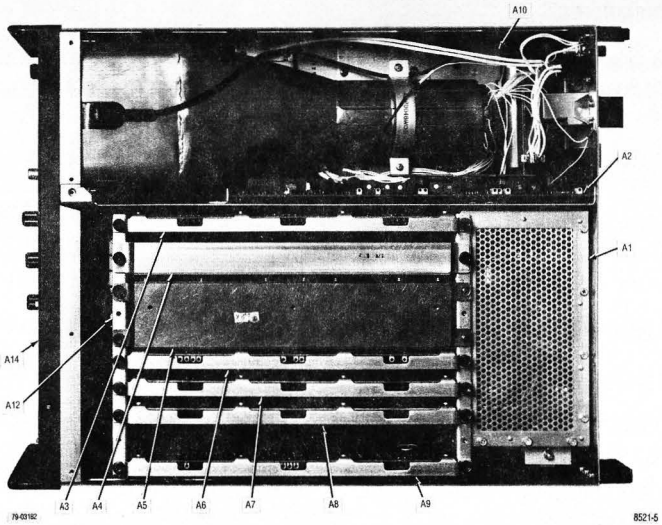

Figure 5-1. Communication System Analyzer, Top View Cover Removed

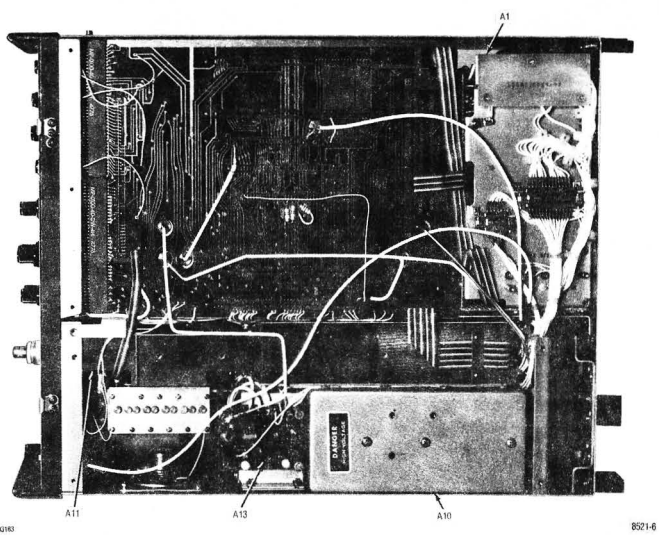

Figure 5-2. Communication System Analyzer, Bottom View Cover Removed

5-16. THEORY OF OPERATION

5-17. General

5-18. The operation of the Communications System Analyzer can be divided into nine basic functions; Generate, Power Meter, Monitor, Duplex Generator, Code Synthesizer, Frequency Counter, Digital Voltmeter (DVM), Oscilloscope, and Sinad Meter. The general operation of the unit will simultaneously incorporate the basic functions to provide the total capability of the system.

5-19. The following discussion will cover the block diagrams for each of the basic functions pi us a discussion on the processor control of the system. A functional block diagram of the total system is shown in figure 5-3. Only the major signal paths between each of the modules are shown to clarify the total system configuration.

5-20. System Control

5-21. System Control is the primary responsibility of the internal microprocessor. Front panel control and system status inputs to the processor are manipulated by the processor to provide the control for the operating mode. From the front panel the processor monitors the keyboards, the function select switch, the modulation control switch, the RF scan switch, the image switch, the bandwidth switch, the horizontal and vertical range switches, and the step attenuator switch. This information plus internal status information causes the processor to display the appropriate information on the CRT to program the center frequency, to set up the generate or monitor mode, and to make the internal switching arrangements for the selected operating state.

5-22. The interface to and from the microprocessor is via the processor bus. This bus consists of a 16-bit address bus, an 8-bit data bus, and a 7-bit control bus. This bus interfaces the processor to its program memory (ROM), scratch pad memory (RAM), IEEE interface, and the peripheral interface adapters (PIA).The PIA is the mechanism by which the processor interfaces with the system. A PIA consits of a dual 8-bit latch which may be programmed as either an input or output for the microprocessor. System input and control information passes to and from the microprocessor via three system control buses attached to a PIA.

5-23. Each system control bus consists of a 4 bit address bus, a 4 bit data bus, and an enable line. The 4 address bits determine which of 16 possible latches the 4 bits of data is to be sent to or received from. The enable line triggers the actual transfer of data. The three control buses within the system are called the RF control bus and the AF control buses 1 and 2. The RF control bus is as described above while the AF control buses consist of a single 4-bit address and 4-bit data bus and two enable lines. The resulting total input/output capability for the system buses is 16 latches at 4-bits each times 3 buses or 192 bits. A tabulation of buses and the controlling or input function of each bit is shown in table 5-2.

5-24. Systems with the IEEE remote control option interface the IEEE bus to the processor bus through a general purpose interface bus adapter (GPIB) on the IEEE interface module. When enabled all control inputs to the system pass through the IEEE bus and front panel controls are ignored. For more information on IEEE control see section 22.

5-25. Generate Mode

5-26. The generate mode provides a variable level RF output that is phase locked to the internal 10 MHz standard. AM, FM, and Sideband Modulation are possible on the output signal. A block diagram of the generate mode is shown in figure 5-4.

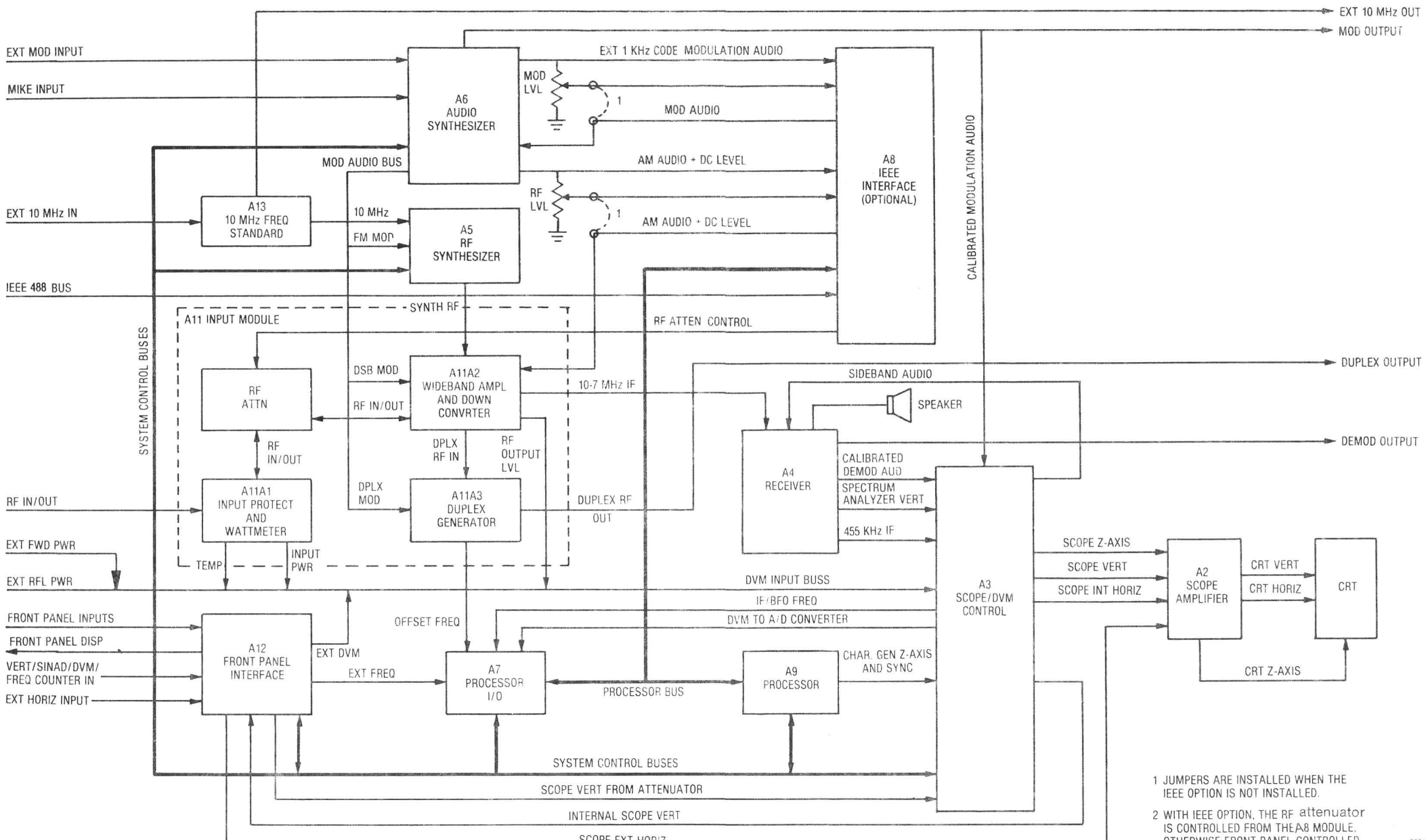

Figure 5-3. System Block Diagram

Table 5-2. Control Buses and Functions

Data / ADRS	RF Bus D3	RF Bus D2	RF Bus D1	RF Bus D0	AF Bus #1 D3	AF Bus #1 D2	AF Bus #1 D1	AF Bus #1 D0	AF Bus #2 D3	AF Bus #2 D2	AF Bus #2 D1	AF Bus #2 D0	Data / ADRS
0	310-440 PLL A0				Audio Synth N0				Display Led's				0
1	310-440 PLL N0				Audio Synth N1				Function Led's				1
2	310-440 PLL N1				Audio Synth N2				Mode Led's				2
3	60 PLL N0				Audio Synth N3				Input Scope Atten				3
									0.001	0.01	0.1	1.0	
4	60 PLL N1				PL Sel	DPL CLK Enab	DPL Sel	AUDIO Synth N4			Atten Int/Ext Sel	Ext In AC/DC Sel	4
5	60 PLL N2				MOD To Spkr Enab	Audio Atten 30 dB	Aduio Atten 20 dB	Audio Atten 10 dB	RF Atten Position				5
6	60 PLL N3				DPLX MOD Enab	DSBSC MOD Enab	FM MOD Enab	AM MOD Enab	Scan Switch Position				6
7	310-440 PLL A1		60 PLL N4						IF Overl'd In	SIG Present In	RF Input <+20 dB In	WB/NB Sw In	7
8			500-1000 Out Enab	250-500 Out Enab	DVM MODE Select				$\overline{\text{CSSG}}$ $\overline{\text{Cont}}$ Sw In	$\overline{\text{CSSG}}$ $\overline{\text{Burst}}$ Sw In	Hi/Lo Image Sw In	Gen Sw In	8
9	WB MOD Enab	(MOD) x (2) Enab	MOD $\overline{\text{INV}}$/INV Sel	MOD FM/SWP Sel		Pk Det FM MOD Enab	Pk Det AM MOD Enab	Pk Det Demod Enab	Scope Vertical Switch Pos In				9
									$\overline{\text{10 V}}$/ DIV	$\overline{\text{1V-100kHz}}$ DIV	$\overline{\text{0.1V-10kHz}}$ DIV	$\overline{\text{0.01V-1kHz}}$ DIV	
A	0.01-1000 Sel	500-700/ 700-1000 VCO Sel	LOOP INV/$\overline{\text{INV}}$ Sel	MOD Disable		Int DVM x 0.1 Enab	WB/NB Sel	IF/BFO Freq Sel	$\overline{\text{Mon}}$ Sw In	Scope Horiz Switch Pos Sw In			A
B					Horiz Scope Mode Sel		Vert Scope Mode Sel						B
C					Pwr MTR Enab	(Mon + DSB)/ Gen Sel		.01-1 /1-10 Swp Sel					C
D	SSB Demod Enab	FM Demod Enab	AM Demod Enab	Demod To Spkr Enab	Scope Time Base CTL								D
					SSC3	SSC2	SSC1	SSC0					
E	WB/NB Sel	Demod INV/$\overline{\text{INV}}$ Sel	Alarm Enab	LIN IF/ Log IF Sel	Scope Time Base CTL				DVM AC/DC Sel	Freq Cntr Range			E
					SSC7	SSC6	SSC5	SSC4					
F									Ctr/DVM Sel	Counter Input Sel			F
										IF/BFO	Offset	Ext	

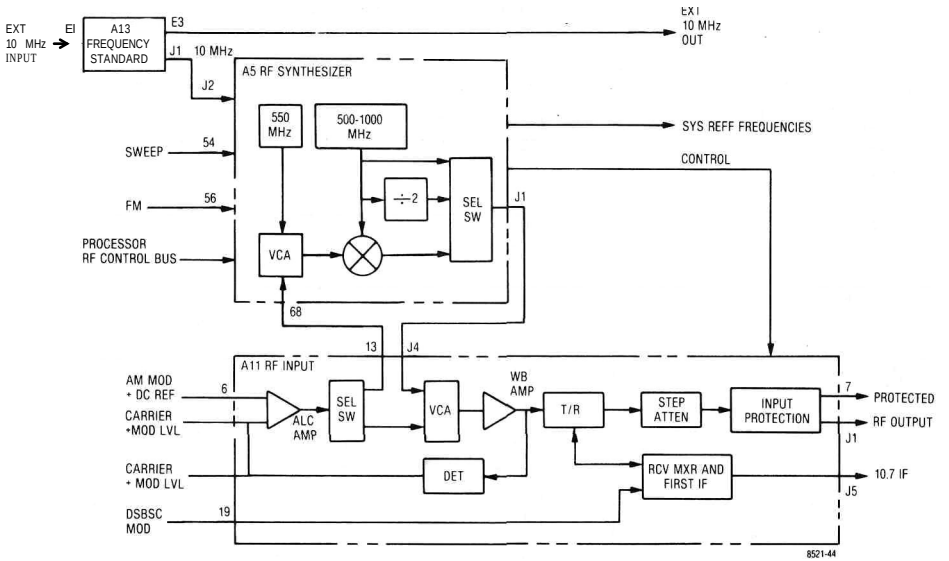

Figure 5-4. Generate Mode Block Diagram

5-27. The Frequency Standard module (A13) contains a 10 MHz standard oscillator with buffering and switching to provide a 10 MHz signal to the EXTERNAL 10 MHz OUTPUT and to the RF Synthesizer (A5). A provision is made for the application of an EXTERNAL 10 MHz INPUT which causes the internal standard to shutdown and the EXTERNAL 10MHz INPUT to be switched to the EXTERNAL 10 MHz OUT and to the RF Synthesizer.

5-28, The 10 MHz standard input to the RF synthesizer is digitally divided down to provide SYSTEM REFF FREQUENCIES for the frequency counter, the zero beat detector, the second local oscillator in the receiver, and the processor timing reference. Additionally reference frequencies are provided for a fixed 550 MHz locked loop and for a programmable 500 MHz-1000 MHz locked loop. The programming of the 500 MHz-1000 MHz locked loop is provided by the RF CONTROL BUS from the processor. The SELECT SWITCH selects one of three possible output points for the SYNTH RF output signal. The first is from the 500 MHz-1000 MHz loop directly. The second is from a divide by two on the output of the 500 MHz-1000 MHz loop which gives frequencies from 250 MHz to 500 MHz. For outputs below 250 MHz, the output of the 500 MHz-1000 MHz loop is mixed with the fixed 550 MHz signal and the difference signal used for the output. For this output the processor programs the 500 MHz-1000 MHz loop for frequencies between 550.01 MHz and 800 MHz to obtain outputs from 10 kHz to 250 MHz respectively.

5-29. FM and SWEEP Modulation is implemented within the 500 MHz-1000 MHz loop. FM capability is 200 kHz peak which when divided by two gives the 100 kHz peak requirement. Similarly the sweep capability is 10 MHz peak which provides the 5 MHz requirement for the sweep generator and spectrum analyzer requirements.

5-30. The SYNTH RF signal is amplified and leveled in the RF Input module (AH). The signal level at the output of the wideband amp is detected and compared to the AM MOD & DC REF signal from the front panel level control. If there is a difference between the two signal levels, the ALC amp provides an error voltage. The error voltage controls the attenuation of the Voltage Controlled Attenuator (VCA) in the direction that will make the detected RF output equal to the AM MOD & DC REF signal. There are two possible VCA's for the output leveling. The VCA within A11 is used for frequencies from 1 MHz to 1000MHz. For frequencies below 1 MHz, the VCA on A11 is set to minimum attenuation and the VCA on the RF Synthesizer module is used for leveling. Amplitude modulation is incorporated by summing the modulation signal with the DC reference signal to force the leveling loop to vary the output level in proportion to the modulating signal. The signal from the RF level detector (CARRIER + MOD LVL) is used by the processor for the determination of RF output level and the percent AM. The leveled output range of the Wideband Amp is from -3dBm to +13dBm (0.16 to I.OVrms).

5-31. The leveled output from the Wideband Amplifier is applied to the Generate/Monitor (T/R) switch. For AM, FM, and CW signals the switch connects the amplifier output to the Step Attenuator. For Double Sideband Suppressed Carrier (DSBSC) the T/R switch is in the "R" position where the amplifier output is connected to the local oscillator port on the receive mixer and the attenuator is connected to the RF port. The DSBSC MOD signal is then used to drive the IF port of the mixer giving a DSBSC signal at the RF port and thus at the Step Attenuator.

5-32. Coarse level control in 10 dB increments is provided by the Step Attenuator. The total range of the attenuator is from 0 dBto 130 dB attenuation. For the basic R2001 A the Step Attenuator is controlled directly by a shaft to the front panel knob. With the IEEE control option the Step Attenuator is electrically programmable and controlled by the processor. The front panel knob in this case is connected only to a rotary switch which directs the processor in setting the attenuation level. Under IEEE control, commands via the IEEE •bus determine the attenuator setting. (See section 22.)

5-33. The RF signal from the Step Attenuator passes through the input protection circuitry to the RF Output jack. A level detector on the RF Output jack monitors the power level at the jack. If power in excess of 200 mW is applied to the Output jack, the protection circuit will activate and switch the RF Output jack to the internal 50 ohm load. This action protects the Wideband Amp and Step Attenuator against burnout. A signal line from the protection network signals the processor that the system is in the protected mode. The processor in turn activates the CRT and alarm warnings.

5-34. Power Meter

5-35. Input power measurements are made with the RF Input terminated into an internal 50 ohm load. This termination is the same one used for the protect mode when in the generate or monitor functions. A block diagram of the power meter is shown in figure 5-5.

5-36. For the power meter mode the processor sets the WATT METER ENABLE line to cause the RF input jack to be switched to the 50 ohm power termination. For modes other than the power meter, an Input Detector on the RF Input jack detects when the input power has exceeded 200 mW and then switches the input to the load.

5-37. The switch is a single pole double throw configuration so that when switched to the RF load the path to the Step Attenuator and Converter is open circuited. However, leakage across the open switch provides sufficient signal for operation of the normal monitor functions.

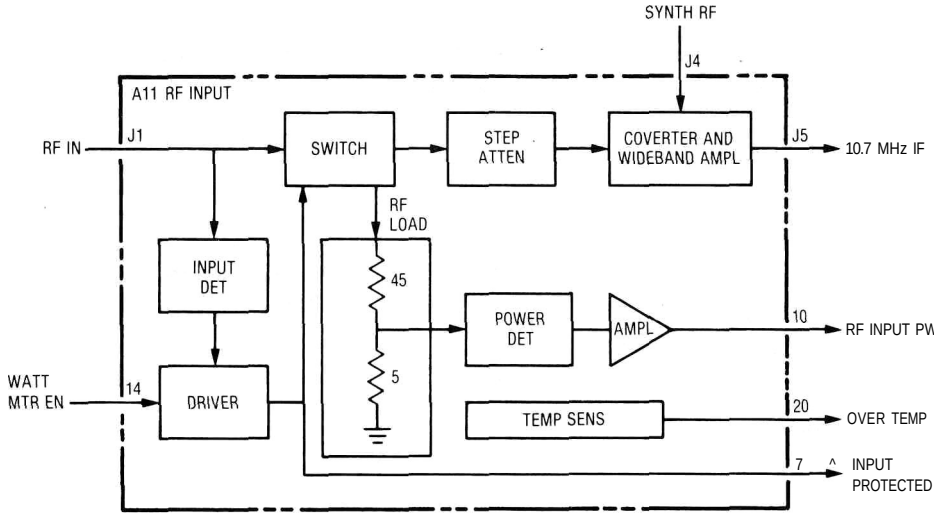

Figure 5-5. Power Meter Block Diagram

5-38. A sample of the RF voltage being applied to the RF Load is detected by the Power Detector to give a DC output proportional to the peak RF voltage. The amplifier following the detector buffers and gain adjusts the detected voltage to provide the RF INPUT POWER signal to the processor. The processor then determines and displays the RF input power.

5-39. A Temperature Sensor located near the flange of the RF Load alerts the processor when the load temperature exceeds 80° C. The processor reacts to the OVER TEMPERATUREsignal by displaying a warning message on the CRT and by sounding the audible alarm.

5-40. Monitor Mode

5-41. The monitor mode allows RF signals from an antenna or from a transmitter directly to be checked for frequency error, modulation level, and spectral content. AM, FM, and sideband modulations can be accommodated with this system. A block diagram of the monitor mode is shown in figure 5-6.

5-42. The RF signal to be monitored is applied to the RF I nput jack on the RF Input module (AH). If the input level is less than 200 mW the input signal passes directly through the Input Protection circuitry to the Step Attenuator. For input levels greater than 200 mW the protection circuit switches the input to the internal load and signal the operator to switch to the Power Monitor mode. In this case, RF leakage (paragraph 5-37) through the protection circuits provides the input signal to the Step Attenuator.

5-43. For the monitor mode the T/R switch is set so that the RF input from the Step Attenuator is connected to the RF port on the receive mixer. The output from the wideband amp is switched to the local oscillator porton the receive mixer. The processor programs the RF Synthesizer for an output frequency that is offset from the frequency to be monitored by 10.7 MHz. The offset may be above or below the center frequency as selected by the front panel image switch.

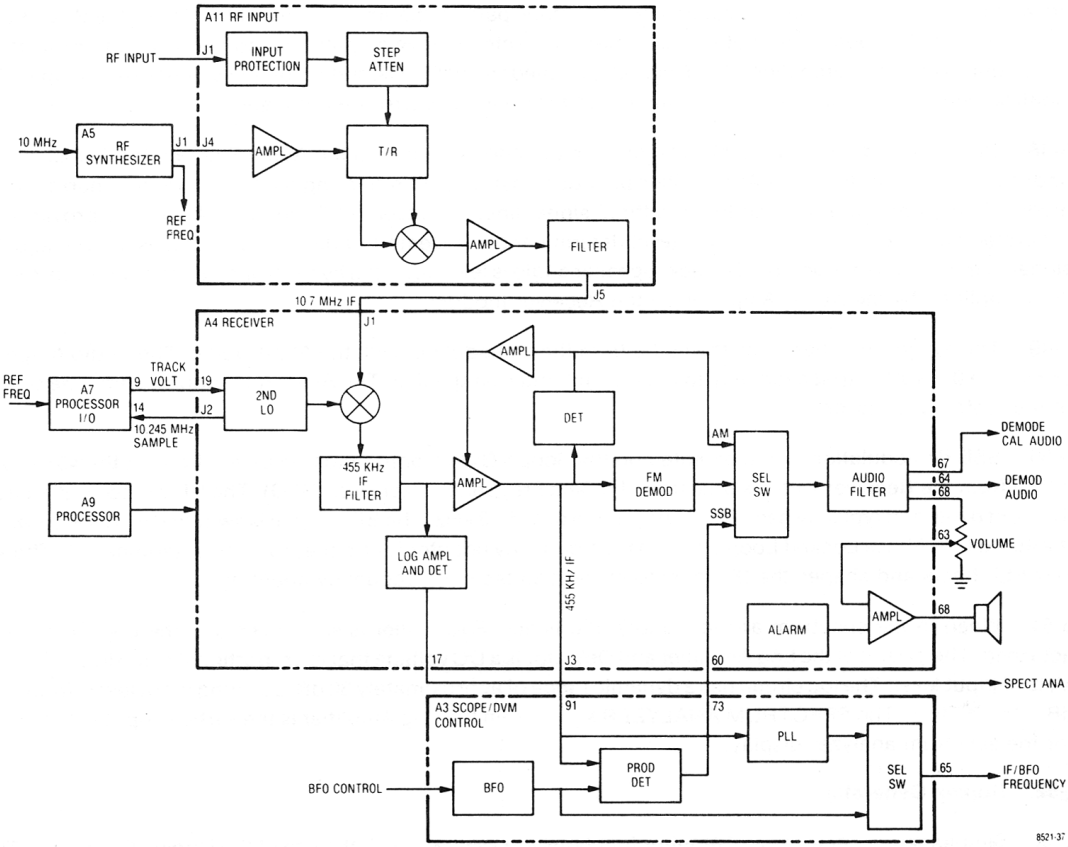

Figure 5-6. Monitor Mode Block Diagram

5-44. The 10.7 MHz difference signal at the IF port of the receive mixer is amplified and selected by the first IF Amplifier and Filter. The Amplifier provides sufficient gain so that the overall gain of the RF Input module is 10 ±2 dB. The I F filter provides a modulation acceptance bandwidth of +100 kHz. The filter output is the 10.7 MHz IF signal to the Receiver module (A4).

5-45. A second mixer in the receiver module down converts the 10.7MHz IF signal to 455 kHz by mixing the input signal with a 10.245 MHz Second Local Oscillator. The Second Local Oscillator is phase locked to the 10 MHz system standard so that its frequency is as accurate as the standard. The phase locked loop for the Second Local Oscillator is split between two modules. A 10.245 MHz SAMPLE signal is compared with the REFERENCE FREQUENCIES from the RF Synthesizer on the Processor I/O module (A7). The comparison provides a TRACKING **VOLTAGE error signal to the 10.245 MHz oscillator which corrects its** frequency to hold it in lock.

5-46. Immediately following the second mixer is the IF filter. The IFfilter is selectable between a narrowband (±6 kHz mod acceptance) and a wideband (±100 kHz mod acceptance) bandwidth. The bandwidth is under the control of the processor and is selected by the bandwidth switch on the front panel.

5-47. The output signal from the IF filter has two possible paths. The path to the Log Amplifier and Detector provides the spectrum analyzer capability. The other path is the linear IF Amplifier for AM, FM, and SSB demodulation. The output level of the Amplifier is detected to give amplitude modulation and to provide the AGC control on the IF amplifier. The IF signal is applied to the FM Demodulator and issenttotheScope/DVM Control module (A3) for SSB demodulation and for frequency error determination.

5-48. Demodulated audio from the selected demodulator is routed to the Audio Filter by the Select Switch under processor control. The Audio Filter provides post detection filtering for both wide and narrow band modes. The output of the Audio Filter is three signal lines. The Demod Calibration Audio line provides the calibrated audio levels for modulation level determination. A Demod Audio output provides a level adjusted signal to the front panel Demod Out jack. Speaker audio is level adjusted by the front panel volume control and then amplified by the Audio Amplifier on the Receiver module.

5-49. The Audio Amplifier sums the audio from the demodulator with the Alarm audio. The Audio Amplifier provides a 0.5 watt output capability to the system's internal speaker. The Alarm generator is under the control of the system processor.

5-50. SSB demodulation is implemented on the Scope/DVM Control module by multiplying the 455 kHz IF signal from the Receiver with a signal from the Beat Frequency Oscillator (BFO). The BFO is controlled from the front panel and typically has a frequency range of 455 ±3 kHz. The BFO signal is switched with the output of the 455 kHz IF Phase Locked Loop (PLL) to the frequency counter for frequency error determination. The 455 kHz PLL filters and shapes the IF signal to make it suitable for frequency counting.

5-51. When in the spectrum analyzer mode the linear IF Amplifier is shut down and the Log Amplifier is activated. The output of the Log Amplifier and Detector is a DC voltage that is proportional to the log of the 10.7 MHz IF input level. The log circuit has a dynamic range of approximately 80 dB, covering input levels from-100 dBm to -20 dBm. The SPECTRUM ANALYZER signal from the Log Amplifier is the vertical input to the scope for the spectrum analyzer display.

5-52. Duplex Generator

5-53. Simultaneous generate and monitor functions are available with the use of the Duplex Generator. The frequency spread between generate and monitor frequencies is limited to a range of 0 to 10 MHz and a fixed frequency of 45 MHz. A block diagram of the Duplex Generator function is shown in figure 5-7.

5-54. The Duplex Output signal is generated by mixing the local oscillator signal for the first receive mixer with a signal from the Offset Oscillator. The Offset Oscillator is at the frequency equal to the desired spread between generate and monitor frequencies less the 10.7 MHz IF offset. The monitor function is unaffected by the duplex mode and operates as described under paragraph 5-40.

5-55. Frequency modulation of the duplex output is obtained by modulating the Offset Oscillator frequency via the OFFSET MOD signal line. Control of the Offset Oscillator is directly from the front panel of the system. A OFFSET FREQUENCY output from the oscillator provides an input to the frequency counter for the determination of the duplex frequency.

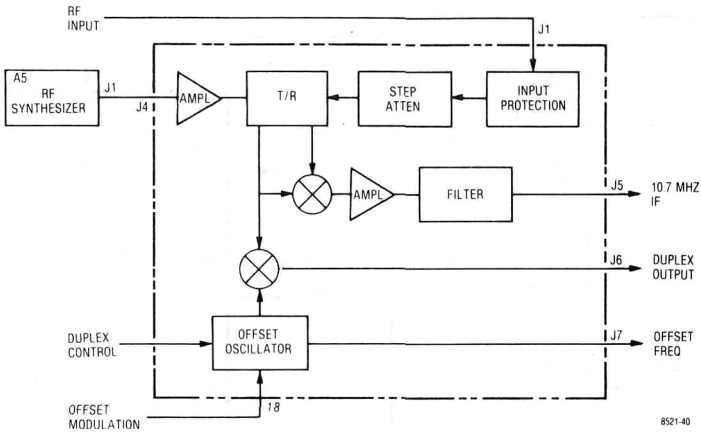

Figure 5-7. Duplex Generator Block Diagram

5-56. Code Synthesizer

5-57. Three simultaneous modulation sources are possible with the internal Code Synthesizer, A private line (PL) or Digital Private Line (DPL) source, a fixed 1 kHz source, and external modulation sources are individually level controllable and sumed together to give the composite modulation audio. The Code Synthesizer provides the modulation source for the system in the generate mode and can be used as an audio frequency source when in the monitor mode. For the IEEE option a provision is made to allow processor control of the modulation levels. A block diagram of the Code Synthesizer is shown in figure 5-8.

5-58. The PL signaling sequence generator is an Audio Synthesizer with an output frequency range from 5 Hz to 10 kHz in 0.1 Hz steps. The frequency is programmed by the processor in response to the operator's request from the keyboard through the CRT display. The Programmable Attenuator following the synthesizer provides 10 dB and 30 dB attenuation levels for the tone remote access sequence.

5-59. DPL Code words are generated by the processor in response to the code entered by the operator. The 23-bit DPL word is stored in the DPL Generator and continuously output when selected. Either PL or DPL signals are switched to the Code Synthesizer Level control on the front panel.

5-60. A 1 kHz reference signal from the RF Synthesizer is bandpass filtered to provide a low distortion 1 kHz sinewave to the front panel 1 kHz Level Control.

5-61. Two sources of external modulation are possible. A standard Motorola microphone interface jack on the front panel and a BNC front panel jack are provided. The microphone input is connected to an IDC circuit .for peak limiting. The composite of the two external modulation sources is the signal to the External Level control on the front panel.

5-62. Systems without the IEEE option will have the wipers of the level control pots jumpered to their respective inputs to the summation amp on the Audio Synthesizer module (A6). Those systems with the IEEE option will select on the IEEE Interface module (A8) either the tops of the level controls or their wipers to the Programmable Attenuators for remote or local control respectively. While in the IEEE Control mode the processor controlled Programmable Attenuator on the IEEE module provides the modulation level control. For the local mode the attenuators are programmed for zero attenuation so that the wipers of the level controls set the modulation levels directly.

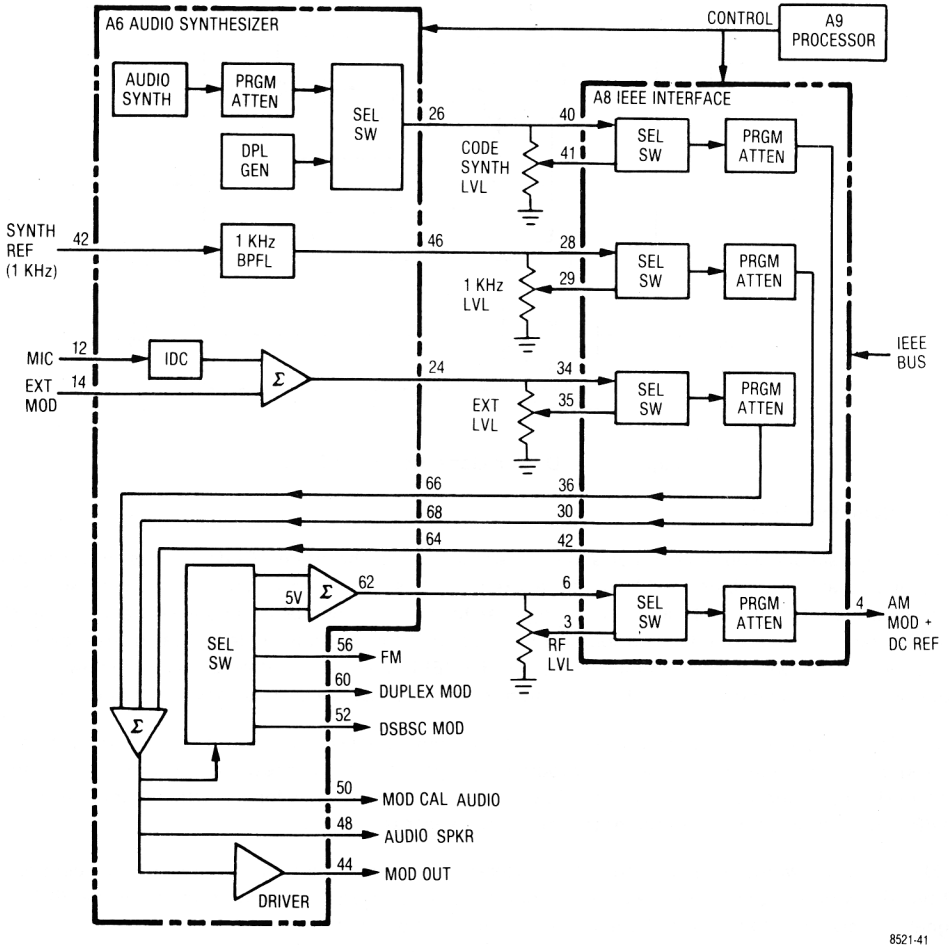

Figure 5-8. Code Synthesizer Block Diagram

5-63. The three modulation sources are sumed together on the Audio Synthesizer module after the level controls. The composite modulation signal is then switched to the appropriate modulator and applied to the modulation determination circuitry (MOD CAL AUDIO), the audio amplifier (SPKR AUDIO), and the Modulation Output jack (MOD OUT) on the front panel. The signal to the front panel jack is buffered by a Driver Amplifier to provide a low driving source impedance.

5-64. The AM modulation signal at the output of the Select Switch is sumed with a +5 volt signal. This combination provides a DC level to control the average output power of the wideband amp in the RF Input module, and a superimposed modulation signal to give an AM output. The RF Level control on the front panel for local control or the Programmable Attenuator on the IEEE module provide local or remote RF level control by simultaneously attenuating the DC level and the modulating signal. The resulting signal is the AM MOD & DC REFERENCE signal to the RF Input module.

5-65. Frequency Counter

5-66. Three possible signal sources are made available to the frequency counter for frequency determination. Two of the inputs are from internal system points for the determinations of the offset frequency (OFFSET), and the monitored carrier error frequency (IF/BFO). The third input is the external input (FREQ CNTR INPUT) on the front panel. A block diagram of the frequency counter function is shown in figure 5-9.

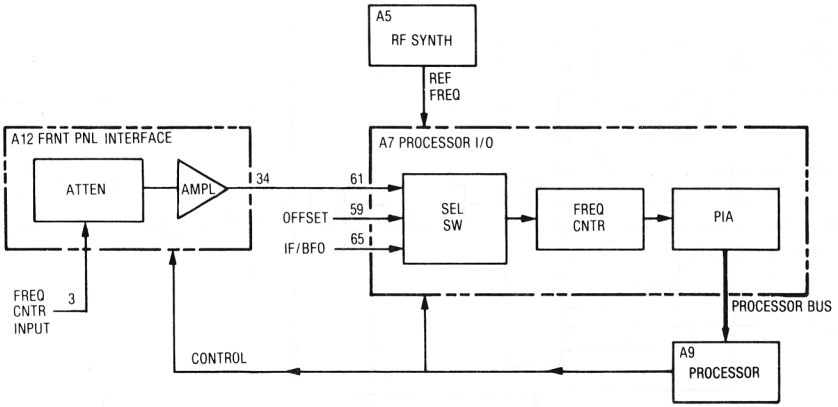

Figure 5-9. Frequency Counter Block Diagram 852™

5-67. The external input signal is routed to the Front Panel Interface module (A12). A range Attenuator on the Interface module provides variable sensitivity settings according to the vertical range switch setting on the front panel. An Amplifier following the range Attenuator amplifies and limits the signal amplitude for the frequency counter input.

5-68. A Select Switch on the Processor I/O module (A7) routes the desired signal to the Frequency Counter circuitry. The signal selected is controlled by the processor and is determined by the operating mode of the system.

5-69. A 16-bit gated accumulator is used to determine the input frequency. Gate times from 1 msec to 10 sec are automatically selected by the processor to give the maximum possible resolution. The gate times are derived from the RF Synthesizer REFERENCE FREQUENCIES and thus are as accurate as the system time base.

5-70. The 16-bit Frequency Counter output is transferred directly to the processor bus through a Peripheral Interface Adapter (PIA). The processor in turn adjusts the data for the gate time used and then processes the information to obtain the required frequency display.

5-71. Digital Voltmeter (DVM)

5-72. The **processor through the DVM circuitry has access to voltage information ata large** number of points throughout the system. From this information the processor is able to determine and display parameters such • as; output power level, modulation level, input power level and the like. In addition an external voltage applied to the DVM input jack on the front panel can be measured and displayed for external voltage measurements. A block diagram of the DVM function is shown in figure 5-10.

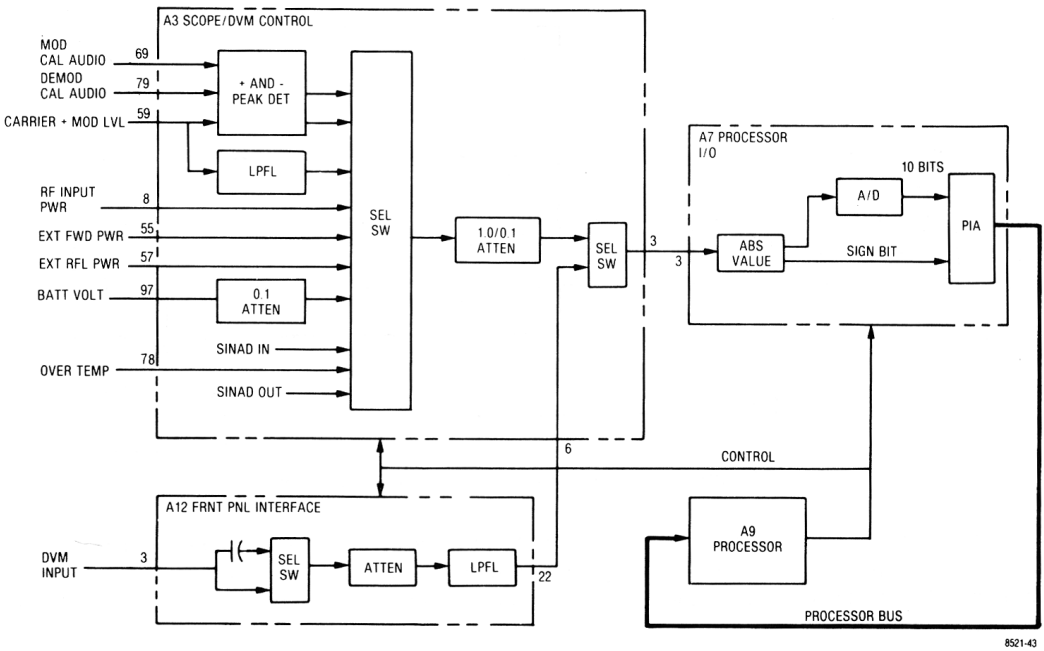

Figure 5-10. Digital Voltmeter (DVM) Block Diagram

5-73. Switching for the DVM input is contained on the Scope/DVM Control module (A3). One of ten internal measurement points may be selected for measurement. The switching action is controlled by the processor and is performed as required to obtain the information on the CRT. To keep the CRT information current, each of the required measurements are made in sequence at an approximate rate of thirty per second. The net effect is a multiplexing of the voltage information to the processor.

.5-74. Two modulation signals (MOD CAL AUDIO and CARRIER + MOD LVL) and a demodulated signal (DEMOD CAL AUDIO) are made available to the peak detectors. Positive and negative peak determination of the selected signal enables the processor to determine the level of modulation.

5-75. A Lowpass Filter (LPFL) removes the DC component from the CARRIER + MOD LVL signal so that the generate RF output level can be determined. Refer to paragraph 5-30.

5-76. The RF INPUT POWER and OVERTEMP signal lines from the RF Input module provide the processor inputs for the internal wattmeter. (Paragraph 5-38). External wattmeter element inputs (EXT FWD PWR and EXT RFL PWR) from the front panel jack provide the information for the external wattmeter display.

5-77. A signal line from the DC input jack on the rear panel (BATT VOLT) is brought to the processor for battery voltage determination. The voltage is attenuated by a factor of 10 to stay with the 10 volt maximum input to the select switch. The processor uses the battery voltage measurement to warn the operator when the battery is near it's discharged state.

5-78. Sinad determination utilizes the two remaining inputs to the select switch. For a discussion on the sinad function see para 5-96.

5-79. The selected internal measurement signal is then passed through a range attenuator. Signals from the Select Switch have a 0 to +10 volt range while the DVM input has a 1 volt maximum input requirement. The processor automatically determines and sets the correct range on the attenuator so that the input level to the DVM is maintained at less than 1 volt. For levels from the select switch less than 1 volt, the attenuator is ranged to the unity gain position for maximum measurement resolution.

5-80. A select switch following the internal range attenuator gates either the internal measurement points or the external input to the DVM circuitry. External DVM inputs are applied through the front panel jack to the Front Panel Interface module (A12). On the Interface module, a processor controlled switch selects between a direct coupled or a capacitively coupled path for DC and AC measurements respectively. A range attenuator follows the AC/DC switch to provide processor controlled autoranging over a four decade range. Input voltages from 1 millivolt to 300 volt can be handled through the DVM Input.

5-81. For DC measurements a lowpass filter (LPFL) removes AC signal components. The filter provides approximately 25 dB rejection at 50 Hz so that accurate DC measurements can be made with superimposed AC line ripple. When the AC measurement mode is selected the LPFL is reprogrammed for less than 0.5 dB rejection at 10 kHz.

5-82. Positive and negative DVM input levels are full-wave rectified by the Absolute Value circuit on the Processor I/O module (A7). The outputs of the Absolute Value circuit provide a positive voltage level equal to the magnitude of the input voltage and a SIGN BIT indicating the polarity of the input signal. For AC measurements a lowpass filter is switched into the Absolute Value circuit to filter the rectified AC input for it's average level. The processor then multiplies by 1.11 to obtain the RMS value.

5-83. An analog to digital converter (A/D) converts the magnitude voltage level into a 10-bit digital word. This digital word when combined with the SIGN BIT is a binary representation of the input voltage level. The peripheral interface adapter transfers the information to the processor.

5-84. Oscilloscope

5-85. Three basic functions are provided for by the system oscilloscope. The alphanumeric and modulation displays provide operating mode and control information for the system. The external oscilloscope feature augments the total system as a general purpose test instrument. A block diagram of the oscilloscope function is shown in figure 5-11.

5-86. Drive signals for the CRT are provided by circuits on the Scope Amplifier module (A2). Horizontal and vertical signals are amplified by their respective amplifiers from 0.5 volt/division input levels to the levels required on the deflection plates. A Z-Axis Modulator circuit controls the cathode to grid bias voltage on the **CRT to effect intensity control.**

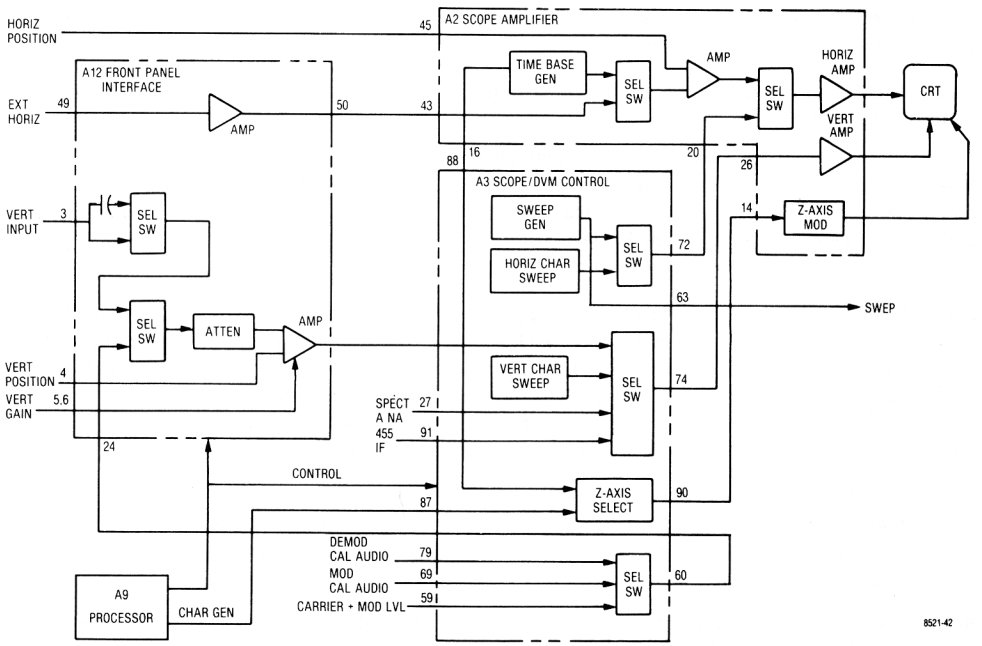

Figure 5-11. Oscilloscope Block Diagram

5-87. The horizontal amplifier input is selected between external and internal scope functions. External functions, Time base Generator or external horizontal input, are switched to a sumation amp where the HORIZONTAL POSITION signal from the front panel is added. The resulting DC offset positions the display horizontally on the CRT.

5-88. Six decade sweep ranges from 1μ sec to 100 msec per division are provided by the Time base Generator. Control of the Time base Generator is from the front panel horizontal switch through the processor.

5-89. Front panel external horizontal inputs are applied to the top of the horizontal vernier gain potentiometer. The wiper of the gain potentiometer is the EXTERNAL HORIZONTAL input signal to the

preamp on. the Front Panel Interface module (A12). The preampprovittes (he required horizontal input sensitivity and buffers the signal to the select switch on the Scope Amplifier module.

5-90. Internal horizontal signals, Sweep Generator and Character Sweep outputs, are selected on the Scope/DVM Control module (A3). The Sweep Generator provides a sawtooth waveform to the RF Synthesizer module for the sweep generator and spectrum analyzer functions. The sweep signal to the CRT horizontal input causes the scope sweep to be synchronous with the synthesizer sweep for the spectrum and swept filter response displays.

5-91. The Horizontal Character Sweep generator output is a sawtooth waveform that provides the horizontal sweep for the raster scan character display.

5-92. One of four possible vertical signal sources are switched to the Vertical Amplifier input by a Select Switch on the Scope/DVM Control module. The 455 kHz IF and SPECTRUM ANALYZER signals from the Receiver Module provide the IF envelope and spectrum analyzer displays respectively. The Vertical Character Sweep generator gives the vertical sweep for the raster scan character display. The remaining input is the path for external vertical or modulation scope vertical inputs from the Front Panel Interface module.

5-93. A vertical preamplifier on the Interface module gives a vertical sensitivity of 10 millivolt per division and provides positioning and vernier gain capability for its input. The amplifier is proceeded by a four decade range attenuator which is controlled from the front panel vertical switch through the processor. The attenuator provides external vertical input sensitivities from 0.01 to 1.0 volt per division and modulation scope sensitivities from 0.25 to 25 kHz per division.

5-94. A Select Switch ahead of the Attenuator selects between the external vertical input or the modulation scope inputs. The External Vertical input path is further selected between AC and DC coupling before becoming the vertical input jack on the front panel. The modulation scope signal path is switched to one of three possible sources on the Scope/DVM Control module. Demodulation signals from the Receiver are selected via the DEMOD CAL AUDIO path, and frequency and amplitude modulation signals via the MOD CAL AUDIO and CARRIER + MOD LVL signal paths respectively. The Audio Synthesizer module provides the MOD CAL AUDIO signal while the RF Input module gives the CARRIER + MOD LVL signal.

5-95. A Z-Axis Select circuit on the Scope/DVM Control module gates either the CHARACTER GEN signal for character displays or the retrace blanking signal from the Time Base Generator for scope displays to the Z-Axis Modulator on the Scope Amplifier module.

5-96. Sinad Meter

5-97. Sinad, which is defined as the ratio of noise plus distortion to signal plus noise plus distortion, is a measurement of the audio quality at a receiver output. Measurement of the Sinad is implemented with a 1 kHz notch filter. For a receiver receiving a 1 kHz tone the audio output is applied to the 1 kHz notch filter. Sinad is then the ratio of the signal power at the output of the notch filter to the signal power at the input of the notch filter. A block diagram of the Sinad Meter is shown in figure 5-12.

5-98. The Sinad Input from the front panel is AC coupled to the range Attenuator on the Front Panel Interface module (A12). Processor control on the Attenuator allows a wide range of input levels to be automatically handled. The output of the Attenuator is routed to the 1 kHz Notch Filter on the Scope/DVM Control module (A3). Detectors, comprised of fullwave rectifiers and filters, on the input and output of the notch filter determine the respective power levels.'The DC outputs of the detectors are read by processor through the DVM. The processor determies the ratio between the two readings and displays the Sinad.

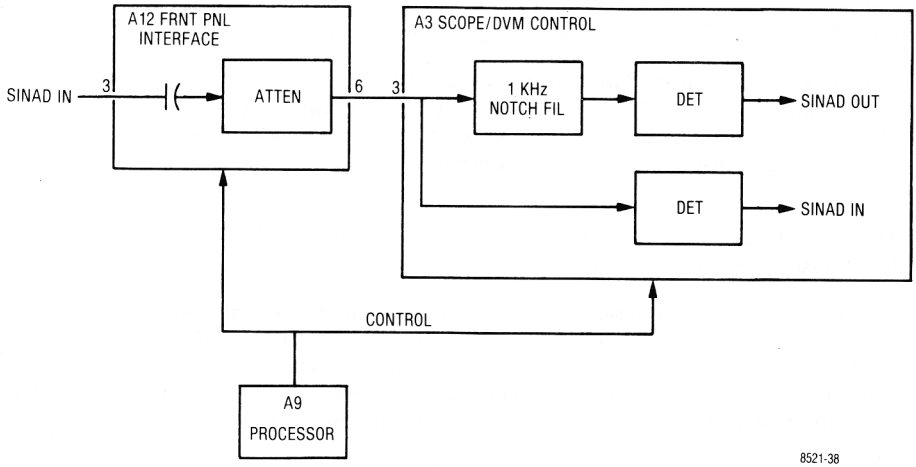

Figure 5-12. Sinad Meter Block Diagram

5-99. ALIGNMENT PROCEDURE

5-100. Introduction

5-101. This section provides a basic (para 5-105) and an extended (para 5-118) alignment procedure. The basic procedure requires only the use of a calibrated oscilloscope. It is expected that the basic alignment be performed whenever service work is performed. The extended alignment procedure requires module extenders and a calibrated digital voltmeter in addition to the oscilloscope. The extended procedure should be performed as required after servicing the system. All adjustments not covered in this procedure are to be performed on suitable module test fixtures only.

5-102. Test Equipment Required

5-103. The test equipment or its equivalent listed in table 5-3 is required for the basic procedure. The additional equipment required for the extended procedure is listed in table 5-4.

Table 5-3. Basic Test Equipment Required

Description	Model
'Oscilloscope Test Point Shorting Jumper Nonmetallic Alignment Tool	Motorola R1004A

*A R2001A is a suitable substitute

Table 5-4. Extended Test Equipment Required

Description	Model
'Oscilloscope	Motorola R1004A
'Digital Voltmeter	Motorola R1001A
*RF Signal Generator	Motorola R1201A
•Modulation Meter	Boonton 82AD
Receiver Test Cover	Motorola 15-P01324V001
Extender Card Set	Motorola67-P01322V001

"A R2001A is suitable for use in place of these separate equipments.

5-104. Preparation for Alignment

1. All alignments to be performed at normal ambient temperature.
2. Remove the top cover of the unit to be aligned.
3. Apply power to the unit to be aligned and allow a warmup time of 15 minutes prior to alignment.

5-105. Basic Alignment Procedure

5-106. CRT Astigmatism and Geometry

1. Select the Monitor Function and the Gen/Mon Mtr Display on the R2001 A. Set the Intensity Control for a medium intense display.
2. While using the Focus Control to maintain a focused display at the center of the CRT, adjust the Astigmatism and Geometry potentiometers (Figure 5-13) for the best focus at the outer edges of the CRT while minimizing the pincushion and barrel distortion of the display. The two adjustments are interactive so that repeated small adjustments alternated between the two potentiometers will be required to obtain the best display.

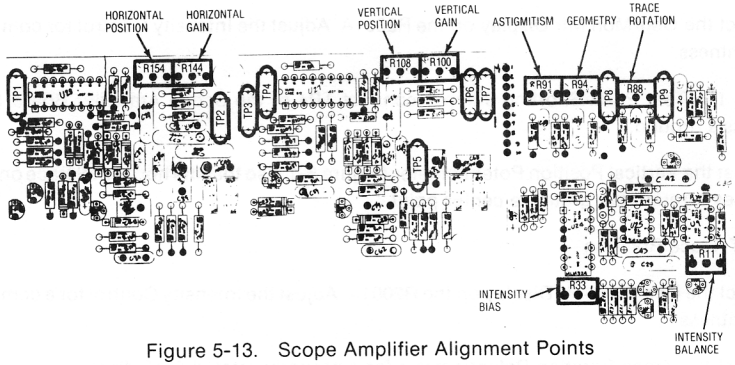

Figure 5-13. Scope Amplifier Alignment Points

5-107. CRT intensity Bias

1. Select the Scope DC Display and the Ext Horiz. Input mod» Set the Intensity Control fully counter clockwise.

CAUTION

Do not let a dot stay in one place on the CRT screen for more than 30 seconds as a permanent burn in the phosphor will occur.

2. Adjust the Intensity Bias potentiometer (Figure 5-13) until a dot appears on the screen. (The Vertical and Horizontal Position Control on the front panel may have to be used to bring the dot on to the screen.) Then back off the Intensity Bias potentiometer until the dot just disappears.

5-108. CRT Intensity Balance

1. Select the Scope DC Display and the 1 mSec/Div Horizontal Sweep rate on the R2001A. Set the Horizontal Timebase Veriner to the Cal position and adjust the Intensity Control for a barely visible horizontal line on the CRT.

2. Adjust the Intensity Balance potentiometer (Figure 5-13) for uniform intensity of the horizontal trace from left to right. The Balance potentiometer affects the intensity on the left side of the trace.

5-109. CRT Horizontal Centering

1. Select the Gen/Mon Mtr Display on the R2001A. Adjust the Intensity Control for a comfortable viewing brightness.

2. With the Test Point Shorting Jumper connect TP1 of the Scope Amplifier Board (Figure 5-13) to chassis ground.

3. Adj ust the Horizontal Position Potentiometer (Figure 5-13) so that the vertical trace on the CRT screen passes through the graticule center point.

4. Remove the jumper from TP1.

5-110. CRT Vertical Centering

1. Select the Gen/Mon Mtr Display on the R2001A. Adjust the Intensity Control for comfortable viewing brightness.

2. With the Test Point Shorting Jumper connect TP4 of the Scope Amplifier Board (Figure 5-13) to chassis ground.

3. Adjust the Vertical Position Potentiometer (Figure 5-13) so that the horizontal trace on the CRT screen passes through the graticule center point.

5-111. CRT Trace Rotation

1. Select the Gen/Mon Mtr Display on the R2001A. Adjust the Intensity Control for a comfortable viewing brightness.

2. Adjust the Trace Rotation Potentiometer for a properly rotated CRT display.

5-112. CRT Horizontal Gain

1. Connect the Mod Out Jack to the Ext Horiz Jack on the R2001A front panel.

2. Set the R2001 A for the Generate FM Function and the Scope DC Display. Set the Horiz Control for Ext Horiz input. Turn the Code Synthesizer off/the Ext Level offhand the 1 kHz Level up about half way.

3. Connect an oscilloscope with a calibrated vertical input-to TP1 on the Scope Amplifier Board. (Figure 5-13).

4. Using the front panel Horizontal Vernier Control adjust for a 3 V p-p amplitude on the sinewave at TP1.

5. With 3V p-p at TP1 adjust the Horizontal Gain Potentiometer (Figure 5-13) for a horizontal trace 6 cm long on the CRT. (Use the front panel controls to position the trace at a convenient place near the center of the CRT).

5-113. CRT Vertical Gain

1. Connect the Mod Out Jack to the Vert Input Jack on the R2001A front panel.

2. Set the R2001A for the Generate FM Function and the Scope DC Display. Set the Horiz Control for 1 mSec/Div sweep rate and the Horizontal Vernier to the Cal position. Set the Vert Control for 1 V/Div input sensitivity and the Vertical Vernier to the Cal position.

3. Turn the Code Synthesizer off, the Ext Level off and the 1 kHz Level up about half way.

4. Connect an oscilloscope with a calibrated vertical input to TP4 on the Scope Amplifier Board. (Figure 5-13).

5. Using the front panel 1 kHz Level Control adjust for a 3V p-p amplitude on the sinewave at TP4.

6. With 3V p-p at TP4 adjust the Vertical Gain Potentiometer (Figure 5-13) for a 6 cm p-p sinewave on the CRT. (use the front panel Position Controls to center the waveform on the CRT).

5-114. Vertical Input Gain

1. Set the R2001 A for the Generate FM Function and the Scope DC Display. Set the Horiz Control for 1 m Sec/Div sweep rate and the Horizontal Vernier to the Cal position. Set the Vert Control for 1 V/Div input sensitivity and the Vertical Vernier to the Cal position.

2. Connect an oscilloscope with a calibrated vertical input to the Mod Out Jack on the front panel.

3. Turn the Code Synthesizer off, the Ext Level off and adjust the 1 kHz Level Control for a 6 V p-p sinewave on the attached oscilloscope.

4. Disconnect the oscilloscope from the Mod Out Jack and connect the Mod Out Jack to the Vert Input Jack on the R2001A.

5. Adjust the Input Vertical Gain Potentiometer on the Front Panel Interface Board (Figure 5-14) for a 6 cm p-p sinewave on the CRT. (Use the front panel Position Controls to center the waveform on the CRT.)

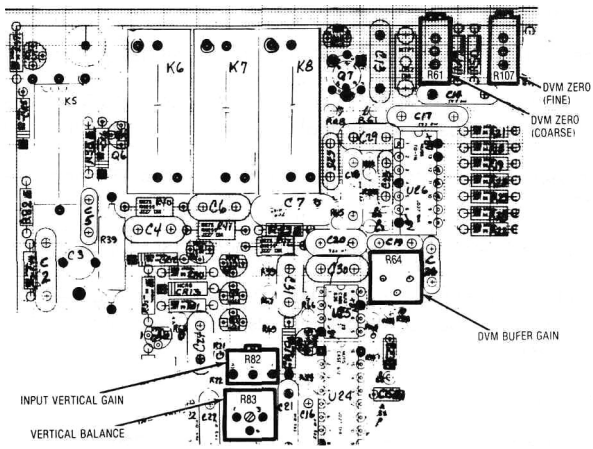

Figure 5-14. Front Panel Interface Alignment Points

5-115. DVM Zero

1. Select the DVM Display and the DC Mode on the R2001A.

2. Short the center conductor of the DVM Input Jack to ground.

3. Adjust the DVM Zero (Coarse) and the DVM Zero (Fine) Potentiometers on the Front Panel Interface Board (Figure 5-14) for a zero reading on the DVM Display.

5-116. Spectrum Analyzer Centering

1. Select the Spect Analyzer Display on the R2001 A. Set the Dispersion Control on the front panel to the 1 MHz position, (full counter clockwise) Set the center frequency of the analyzer to 10.0 MHz.

2. Connect the 10 MHz Output on the rear panel to the RF Input on the front panel. Set the RF Step Attenuator to obtain a convenient spectral display.

3. Adjust the Spectrum Analyzer Centering Potentiometer on the Scope/DVM Control Board (Figure 5-15) so that the spectral line on the CRT is centered about the center graticule line.

5-117. Horizontal Time Base

1. Select the Tone Memory Display and the Generate FM Function on the R2001 A. Program tone A for 20.0 Hz and Tone B for 2000.0 Hz.

2. Select the Modulation Display. Set the Oscilloscope Controls for 2.5 kHz/Div vertical range, Auto Trigger, and 10 mSec/Div horizontal sweep range. Set the Horizontal and Vertical Vernier Controls to their Cal positions. •

3. Set the Code Synthesizer for Continuous, Tone A, and turn up the Code Synth Level to obtain a nearly full scale sinusoidal waveform on the CRT. Turn the Ext Level and the 1 kHz Level Controls to the off position.

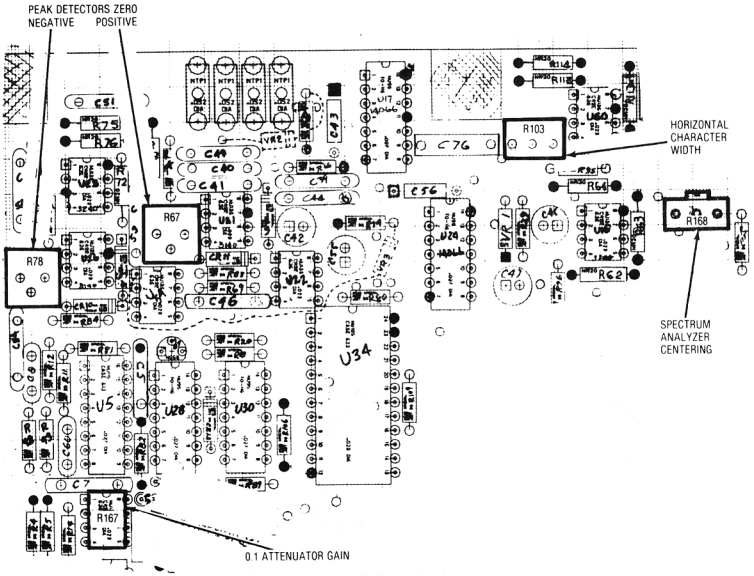

Figure 5-15. Scope/DVM Control Alignment Points

Adjust the Coarse Time Base Calibration Potentiometer on the Scope Amplifier Board (Figure 5-16) so that one cycle of the displayed waveform occurs in 5 cm along the horizontal axis. Use the Vertical and Horizontal Position controls to center and to move the waveform so that the 5 cm are measured in the middle of **the screen to avoid nonlinearities near the edge of the CRT.**

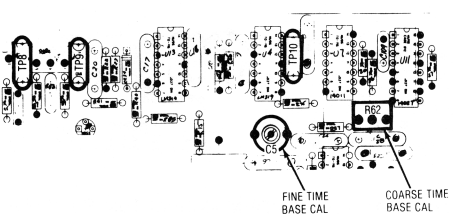

Figure 5-16. Horizontal Time Base Alignment Points

Set the Oscilloscope Horizontal Control for a *100ft* Sec/Div sweep rate and select the Tone B output on'-the Code Synthesizer.

Adjust the Fine Time Base Calibration Capacitor on the Scope Amplifier Board (Figure 5-16) so that one cycle of the displayed waveform occurs in 5 cm along the horizontal axis, Use the Vertical and Horizontal Position controls to center and to move the waveform so that the 5 cm are measured in the middle of the screen to avoid nonlinearities near the edge of the CRT.

5-118. Extended Alignment Procedure

5-119. DVM

1. Remove the top and bottom covers **of the-R2001A.**

2. Connect the R2001Atoa primary power source and turn it on. Allow approximatly 15 minutes warm up before proceeding with the alignment procedure.

3. Short the center conductor of the DVM Input Jack on the front panel to ground. Connect an external DVM with a floating input between pin 1 and pin 6 of J3 on the bottom side of the motherboard.

4. Adjust the Coarse and Fine DVM Zero potentiometers on the Front Panel Interface board (Figure 5-17) for a reading of 0 ±0.5 mV on the external DVM.

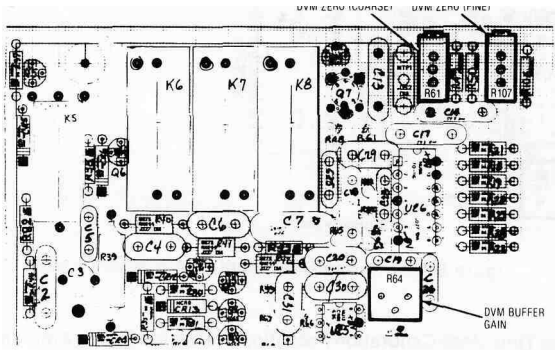

Figure 5-17. DVM Input Buffer Alignment Points

5. Remove the ground from the DVM Input and connect the DVM Input to TP 12 of the Scope/DVM Control Board. (Figure 5-18)

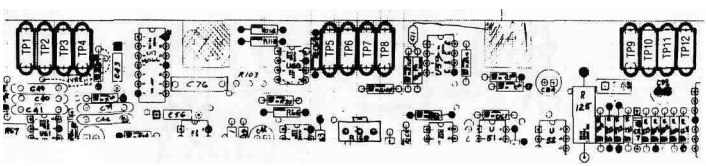

Figure 5-18. Scope/DVM Control Test Point Numbering

6. Disconnect the external DVM from pins 1 and 6 of J3 and connect it to TP 12 of the Scope/DVM Control Board and chassis ground. Note the DVM reading for TP 12.

7. Reconnect the external DVM between pin 1 and pin 6 of J3. The external DVM should show a reading equal to one-tenth the voltage at TP 12 noted in paragraph 5-119.6 plus or minus 10 mV. If the reading falls outside this range it will be necessary to physically disconnect the front panel from the chassis in order to adjust the DVM Input Gain Potentiometer on the Front Panel Interface Card (Figure 5-17). Adjust the DVM Input gain for a reading on the external DVM equal to one-tenth the voltage noted for paragraph 5-119.6. Reconnect the front panel to the chassis.

8. Repeat paragraphs 5-119.3 and 5-119.4.

9. Disconnect the external DVM. With the DVM input jack still shorted adjust the A/D Zero Potentiometer on the I/O Board (Figure 5-19) **for a** O.tfVDC'reading on the R2001ACRT display.

CAUTION

Do not use the card extender while aligning the Processor I/O board.

10. Remove the short from the DVM Input and connect the DVM Input to TP 12 of the Scope/DVM Control Board.

11. Adjust the A/D Gain Potentiometer on the Processor I/O Board (Figure 5-19) for a DVM reading on the CRT equal to the voltage measured at TP 12 with the external DVM for paragraph 5-119.6.

12. Connect the external DVM to TP11 of the Scope/DVM Control Board and chassis ground. Note the DVM reading for TP11.

13. Disconnect he external DVM from TP11 and connect the DVM Input Jack on the front panel to TP11 of the Scope/DVM Control Board.

14. Adjust the A/D Balance Potentiometer on the Processor I/O Board (Figure 5-19) for a DVM reading on the CRT equal to the voltage measured at TP11 with. the external DVM in step 13.

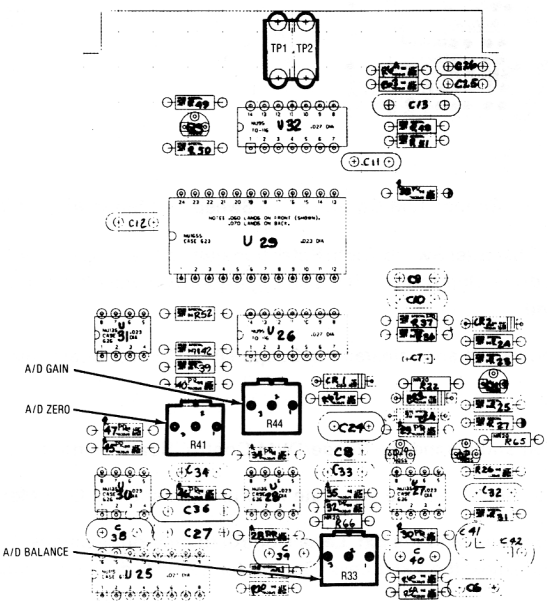

Figure 5-19. Processor I/O A/D Alignment Points

5-120. Character Generator

1. Perform the Basic Alignment Procedure of para 5-105.

2. Turn the R2001A off and extend the Scope/DVM Control Board using the 100 pin extender card.

3. Turn the R2001A on and select the Monitor FM Function and the Gen/Mon Mtr Display.

4. Adjust the Horizontal Character Sweep Width Potentiometer on the Scope/DVM Control Board (Figure 5-20) so that the right-hand edge of the CRT character display is approximately 4.2 graticule divisions to the right of the graticule center line.

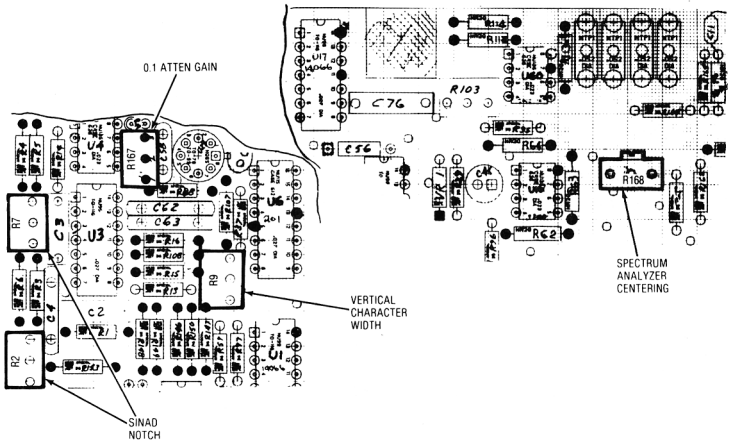

Figure 5-20. Scope/DVM Control Char Sweep and Sinad Alignment Points

5. Adjust the Vertical Character Sweep Width Potentiometer on the Scope/DVM Control Board (FigureS-20) so that the bottom edge of the CRT display is approximately 3.3 graticule divisions below the graticule center line.

6. Turn the system power off and reinstall the Scope/DVM Control Board into the R2001A,

5-121. Sinad Notch Filter

1. Turn the R2001A off and extend the Scope/DVM Control Board using the 100 pin extender card.

2. Turn the R2001A on and select the Generate FM Function and the Gen/Mon Mtr Display.

3. Set the Modulation Switch and the Ext. Level Control to their off positions. Set the BW Switch to the Narrow position and adjust the 1 kHz Level Control for a 20 kHz deviation reading on the CRT display.

4. Connect the Mod Out Jack on the fron panel to the Vert/Sinad/DVM/Counter Input Jack on the front panel.

5. *AHernatety ad/usl She Iwo SWAD Noich polenf/ome'ters on 8ie Scope/DVW Coniro) Board iF/gare* 5-20) for a maximum SINAD reading on the CRT display. A reading greater than 30 dB should be obtained.

6: Turn the system power off and reinstall the Scope/DVM Control Board into the R2001A.

5-122. Receiver

5-123. AM Detector

1. Perform the basic alignment procedure of para 5-105.

2. Turn the R2001 A off and remove the Receiver Module. Remove the Receiver Module cover and install the Receiver Test Cover on the module housing. Extend the Receiver module on the Receiver Extender Card.

3. Turn the R2001 A on and select the Monitor AM Function and the Gen/Mon Mtr Display. Set the monitor frequency to 250 MHz, the RF Step Attenuator to the 0 dB position, and the BW Switch to the Narrow position.

4. Connect the external signal generator to the RF In/Out Jack on the front panel. Adjust the external generator for an output level of approximately -60 dBm and a calibrated 30% AM.

5. Adjust R60 (Marked on the Receiver Test Cover) for a reading of 30% ±5% on the CRT AM display.

5-124. FM Detector

1. Select the Monitor FM Function and the Gen/Mon Mtr Display. Set the monitor frequency to 250 MHz, the RF Step Attenuator to the 0 dB position, and the BW Switch to the Wide position.

2. Connect the external signal generator to the RF In/Out Jack on the front panel. Adjust the external generator for a center frequency of 250 MHz at an output level of approximately -30 dBm and a **calibrated 20 kHz** FM.

3. Adjust R70 (Marked on the Receiver Test Cover) for a reading of 20 kHz ± 1 kHz on the CRT FM display.

4. Set the BW switch to the Narrow position and reset the FM on the external generator to 3 kHz deviation.

5. Adjust R125 (Marked on the Receiver Test Cover) for a reading of 3 kHz ± 150 Hz on the CRT FM display.

6. Turn off the FM on the external generator so that a CW signal of a level of approximately -30 dBm is applied to the R2001A.

7. Connect the Demod Out Jack to the Vert/Sinad/DVM/Counter I nputdaek on the front panel. Select the DVM Display and the DC DVM Mode on the R2001A. • ..

8. Adjust R68 (Marked on the Receiver Test Qover) for a 0.0 VDC ±100 mVDC reading on the DVM Display. I

5-125. Spectrum Analyzer

1. Select the Monitor Function and the Spectrum Analyzer Display on the R2001A. Set the monitor frequency to 250 MHz, and the RF Step Attenuator to the 40 dB position.

2. Connect the external signal generator to the RF In/Out Jack on the front panel. Adjust the external generator for a center frequency of 250 MHz and a calibrated output level of -30 dBm with no modulation.

3. Adjust in succession C2, C83, C88, and C96 (Marked on the Receiver Test Cover) to maximize the amplitude of the spectral line in the center of the CRT display.

4. Adjust R124, R91, and R100 (Marked on the Receiver Test Cover) to obtain a uniform change in the spectral amplitude per 10 dB change of the RF Step Attenuator. R124 affects the level of the spectral component when in the top quarter of the screen, R91 affects levels in the third quarter from the top, and R100 affects levels in the bottom quarter.

5. Adjust R119 for offset and R121 for gain so that with the step attenuator in the 0 dB Position the peak of the spectral line lies on the 30 dB line of the CRT and that successive step increases of the input attenuator move the spectral amplitude downward in 10 dB increments on the CRT. The accuracy required for any one step attenuator position is ±3 dB.

6. It will generally be necessary to repeat paragraphs 5-125.4 and 5-125.5 until the best possible accuracy is obtained.

7. Turn the power off and remove the Receiver Module and the Receiver Extender for the chassis. Remove the Test Cover from the Receiver Module and replace the module cover. Reinstall the Receiver Module into the system chassis.

5-126. CHECKOUT PROCEDURE

5-127. Introduction

5-128. This section provides a system checkout procedure. This procedure will help isolate system failures when used with the troubleshooting information in para 5-146.

5-129. Test Equipment Required

5-130. The test equipment listed in table 5-5 or its equivalent will be required to perform the checkout procedure.

Table 5-5. Test Equipment

*RF Signal Generator	Motorola R-1201A
"RF Power Meter	Motorola S-1339A
*SINAD Meter	Motorola R-1013A
"Modulation Meter	Boonton 82AD
RF Power Source	1 watt to 100 watts

*An R2001 A is suitable for use in place of these separate equipments.

5-131. Procedure

5-132. Power On

1. Check that the AC input power select card is in the 120 V postion. Connect the Unit UnderTest (UUT) to a 120 VAC line source with the front panel power switch off. Verify the presence of an AC indication on the front panel.

2. , Sat the poww swtah to the Stawltsy PosWw.. Verify ttwown ready wdifcatw te *Wi.*

3. Set the power switch to the on position. Verify that after a warm-up period a display is visible on the CRT.

5-133. Keyboard Check

1. Verify that each key has the proper effect by observing the Gen/Mon Mtr Display and entering the frequency 123.4567 MHz and the PL frequency 890. Check for proper cursor .key operation.

2. Verify that the up and down display keys perform properly and that the LED at each display illuminates.

3. Verify that the up and down function keys perform properly and, that the LED at each function illuminates. ••' • :

4. Verify that the up and down modulation keys perform properly and that the LED at each modulation mode illuminates.

5-134. Nonvolatile Memory

1. Select some random combination of Display, Function, and Modulation Modes. Simultaneously depress both cursor keys and after a five second delay turn the system power OFF. Turn the system power back ON and verify that the same Display, Function, and Modulation Modes are present.

5-135. Modulation Capability

1. Set the UUT to the Generate FM Mode and select the Gen/Mon Mtr Display. On the Gen/Mon Mtr Display enter a DPLcodeof 111. Select the Oscilloscope Display and connect the Mod Out Jack to the Vert In Jack. Set the code synthesizer to the Cont PL/DPL Mode. On the scope verify the presence of a DPL waveform whose amplitude is variable with the code synthesizer level control.

2. Move the Modulation Switch from CONT to OFF and verify that a short burst of 133 Hz is output before the output stops. . ,

3. Move the Modulation Switch to the BURST position. Verify that a 133 Hz tone is output as long as the switch is held in the BURST position.

4. Select the Tone A Continuous Mode. Verify a Tone A output on the scope and at the speaker.

5. Select the Tone Remote Mode. Verify that when the Modulation Switch is moved from OFF to BURST that a single Tone Remote Access Sequence is generated.

6. Connect a microphone to the Mic Jack- Turn up the ExtLevel Control and verify that speaking into the mike causes a modulation signat to be output as observed on the scope display.

5-136. Frequency Counter

1. Set the UUT to the Gen CW Mode with an output frequency of 35 MHz at a level of 0 dBm as displayed ontheGen/Mon Mtr display. Connect the RF In/Out Jack to the Counter In Jack of the UUT. Select the Frequency Counter Display and verify a frequency reading of 35 MHz.

2. Set the UUT to the Generate FM Mode and select the Gen/Mon Mtr Display. Turn the Code Synthesizer and Ext Modulation sources OFF. Select the Narrow Band Mode and adjust the 1 kHz Level Control for a 5 kHzFM deviation reading. Connect the Mod Out Jack to the Counter Input Jack of UUT. Select the Frequency Counter Display and verify a nominal frequency reading of 1 kHz.

5-137. DVM

1. Maintaining the same conditions as in paragraph 5-136.2, select the DVM Display and the AC Mode on the display. Verify a DVM reading of 0.707 vrms ±0.04 vrms.

2. Select the DC Mode and verify a near zero volt DC reading.

5-138, Scope Mode ,

1. Set the UUT to the Scope AC display mode and connect the scope vertical input jack to the Mod Out Jack. Enable the internal 1 kHz modulation source. Verify the operation of each position of the vertical input range switch and the vertical vernier gain control.

2. With the same connection as in paragraph 5-138.1, verify the operation of each position of the Horizontal Control and the Horizontal timebase vernier.

3. With the Horizontal Control set to the External Mode, connect the External Horizontal jack to the Mod Out jack. Verify a horizontal line whole length is variable with the Horizontal Vernier.

4. Connect the Vert In jack to the Mod Out jack on the UUT. Set the vert and horizontal controls for a convenient display. Verify that a steady sync is obtained in either the Norm or Auto modes and that the point of triggering is adjustable with the level control. Remove the input signal and verify no horizontal sweep in the Norm mode and the presence of a horizontal sweep in the Auto mode.

5-139. SINAD Meter

1. Set the UUT for the Generate FM Function, Narrow Band Mode, and the Tone Memory Display. On the Tone Table set Tone A for 2000.0 Hz.

2. Select the Gen/Mon Mtr Display and the Tone A Cont Modulation Mode. Turn the Ext Level and the 1 kHz Level Controls OFF. Adjust the Code Synth Lvl Control for an FM deviation of 1.88 kHz as read on the CRT display.

3. Without disturbing the Code Synth Lvl Control, turn the Code Synthesizer OFF. Turn ON the 1 kHz Level Control and adjust for an FM deviation of 7.5 kHz on the CRT display.

4. Connect the Mod Out Jack to the SINAD Input Jack on the UUT. Verify a SINAD reading greater than 25 dB.

5. Set the Code Synthesizer to the Continuous Mode and verify a SINAD reading 12 dB ±1 dB.

5-140. Scan Mode

1. Set the UUTfortheGen/Mon Mtr display. Verify the proper operation of each of the RF Scan, switch positions.

5-141. Generate Mode

1. Set the UUTforthe Generate FM Mode at 200 MHz'and select the Gen/Mon Mtr display. Verify an RF level output display on the CRT.

2. Connect the RF millivoltmeter with a 50 ohm termination to the RF In/Out Jack on the UUT. Set the RF step attenuator to the OdB position and adjust the Variable Level control to obtain a displayed output level of +13 dBm. Verify that the RF millivoltmeter reads +13 dBm ±2 dBm.

' 3. Repeat paragraph 5-141.2 except at a center frequency of 800 MHz.

4. Increase the RF Step Attenuator setting in 10 dB increments and verify that the displayed RF level decreases in 10 dB increments.

5. Set the Code Synthesizer Modulation Switch and the Ext Level Control to their respective OFF positions. Select the Narrow Band mode and adjust the 1 kHz Level Control for a 5 kHz deviation reading on the CRT display. Verify a 1 kHz tone at the speaker output.

6. Connect the Modulation Meter to the RF In/Out Jack on the UUT. Set the Modulation Meter for a deviation display of 5 kHz ±250 Hz.

7. Select the Wide Band mode on the UUT and verify that the CRT displays a deviation of 20 kHz. Also verify that the Modulation Meter shows a peak deviation of 20 kHz ±1 kHz.

8. Select the Modulation Display on the UUT and verify a peak-to-peak modulation display of 40 kHz ±2 kHz.

9. Select the Generate CW Function and verify that no modulation is present on the CRT.

10. Set the UUT for the Generate AM Function, the Gen/Mon Mtr Display, and adjust for an RF output level of 0 dBm. Adjust the 1 kHz Level Control for a 50% AM reading on the CRT. Verify that the Modulation Meter reads 50% ±10% AM.

11. Select the Modulation Display and verify a low distortion 1 kHz sinewave.

12. Set the UUT for the Generate SSB/DSBSC Function and verify a low distortion 1 kHz sinewave on the CRT.

13. Set the UUT for the Generate SWP 1-10 MHz Function and the Scope DC Display. Verify a horizontal trace and a center frequency display on the CRT.

14. Set the UUT for the Generate SWP 0.01 - 1 MHz Function and verify the same results as paragraph 5-141.13.

5-142. Power Monitor Mode

1. Set the UUT to the Power Monitor Mode. Set the RF Step Attenuator to the 30 dB position, and select the Gen/Mon Mtr Display. Connect the RF power source to the RF In/Out Jack. Key the power source and verify a correct power reading on the CRT display. Unkey the power source.

2. Set the UUT to the Monitor Function and verify that the RF Step Attenuator is in the 30 dB position. Key the RF power source and verify the presence of an audible alarm and a warning display on the CRT. Unkey the power source.

5-143, Monitor Mode

1. Set the UUT to the Monitor FM Function. Set the Squelch Control to the OFF position and verify the presence of a Sig Lvl indication and noise at the speaker. Turn the Squelch Control full on and verify the absence of a Sig Lvl indication and noise at the speaker.

2. Repeat paragraph 5-143.1 except for the AM Function.

3. Repeat paragraph 5-143.1 except for the SSB/DSBSC Function and enable the BFO. After the test turn the BFO off.

4. Select the Narrow Band FM Monitor Function at 300 MHz and set the RF Step Attenuator to the OdB position. Connect the RF Signal Generator to the RF In/Out Jack and the SINAD Meter to the Demod Out Jack. Set the RF Signal Generator for a center frequency of 300 MHz and for 3 kHz FM at a 1 kHz rate. Adjust the RF output level from the Signal Generator for a 10 dB reading on the SINAD Meter. Verify that the Signal Generator's level is less than -103 dBm (1.5 yUVrms).

5. Calibrate the RF Signal Generator for 3 kHz FM at 1 kHz rate using the Modulation Meter. Set the Generator for a nominal output level of-60 dBm and connect it to the RF In/Out Jack of the UUT. Select the Gen/Mon Mtr Display and verify a monitor deviation reading of 3 kHz ±150 Hz.

6. Calibrate the RFSignal Generatorfor50 kHz FM at a 1 kHz rate. SelecttheWide Band Modeon the UUT and verify a reading of 50 kHz ±2.5 kHz on the CRT deviation display.

7. Calibrate the RF Signal Generator for 30% AM at a 1 kHz rate. Set the Generator for a nominal output level of-60 dBm and connect it to the RF In/Out Jack of the UUT. Select the Monitor AM Function and the Narrow Band Mode. Verify a monitor AM reading of 30% ±5%.

8. Monitor the % AM Displayed on the CRT while increasing the RF level out of the Signal Generator. Verify that the IF Overload Warning occurs before the displayed AM exceeds a reading of 30% ±5%.

9. Select the Modulation Display on the UUT and verify the presence of the received modulation signal.

10. Select the Gen/Mon Mtr Display and the Wide Band Mode on the UUT. Vary the center frequency on either the UUT or the Signal Generator and verify that the Frequency Error Display properly represents the difference between the UUT's Center frequency and the Signal Generator's center frequency.

11. Select the IF Display on the UUT and verify the presence of an IF envelope on the CRT.

5-144. Spectrum Analyzer

1. Set the UUT for the Monitor Function of 300 MHz the Spectrum Analyzer Display, and 0 dB input attenuation. Set at 300 MHz. Connect the Signal Generator to the RF In/Out Jack on the UUT. Verify a spectral amplitude of -30 dBm ±5 dB on the CRT display. Increase the RF Step Attenuator in 10 dB increments verifying that the spectral amplitude decreases by 10 dB ±3 dB with each step.

2. Verify the operation of the Dispersion Control.

5-145. Duplex Generator-

1. Select the Duplex Generator Display and the monitor Function at a frequency of IOOMHz. Enable the 45 MHz offset frequency. For an Image Low switch position verify that a displayed duplex frequency of 55 MHz can be obtained. Set the Image Switch to the HIGH position and verify a duplex frequency display of 145 MHz.

2. Enable the 0- 10 MHz offset frequency and verify that displayed duplex frequencies from 100 MHz to 110 MHz can be obtained.

3. Set the UUT to the Generate Function with the Duplex Generator Display. With the Code Synthesizer and the External Modulation sources OFF, adjust the 1 kHz Level Control for a 20 kHz FM deviation reading on the CRT. Select the Monitor Function and adjust the offset frequency for a duplex output of 100 MHz. Connect the Duplex Output Jack to the RF In/Out Jack and verify a 20 kHz ±1 kHz FM deviation reading on the CRT.

5-146. System Troubleshooting

5-147. A troubleshooting procedure is outlined in Table 5-6. Because of the complexity of the system the table covers only the major failures and provides only a guide to the most probable failed module. When using the table it is important to use the checkout procedure at paragraph 5-126 to determine the fault. The troubleshooting table assumes that all tests prior to the failure point have been successfully completed and thus the applicable circuits are okay.

5-148. A list of the system test points and their functions are provided in Table 5-7. Test points are identified on the block diagrams for the Theory of Operation discussion of paragraph 5-16 and for the Module Descriptions to aid in troubleshooting.

Table 5-6. System Troubleshooting

Test Paragraph	**Fault**	Troubleshooting Procedure
5-132	No AC indication	1. Check AC linecord and line fuse. 2. If system powers up normally when on, Replace AC LED.
5-132	No Oven Ready indication	1. Check for approximately +15 VDC at E13 of the A13 module. If not present replace the **Low** Voltage Power Supply (A1). 2. Check E11 of A13 for +9 VDC and E12 for approximately +7.5 VDC. IfEU is okay and E12 is 0 VDC, replace the LED. If the +9 VDC is not present on E11 replace A13.

Table 5-6. System Troubleshooting (Cont)

Test Paragraph	Fault	Troubleshooting Procedure
5-132	System won't turn on	1. Disconnect the high voltage supply from the low voltage supply at A10P1. Check for +7.9 VDC at pin 1 of J2 on the low voltage supply and for +12 VDC at pin 2. If either voltage is not present replace the low voltage supply (A1). 2. Reconnect the low voltage/high voltage interface and check for a nominal +9 VDC at C15 on the high voltage supply. (C15 is a feedthru cap on the high voltage supply and can be reached from the top side just beyond the CRT socket.) **CAUTION** There is 110V on the rear panel connector even when the power switch is turned off. If 9 volts is not present replace the high voltage supply (A1). 3. If items 1 and 2 check okay replace the low voltage supply (A1).
5-132	System turns on, but no display on the CRT for any display mode	1. Check for presence of high voltage by disconnecting the CRT anode lead and arcing it to the chassis. If no arc, replace the high voltage supply. 2. If the high voltage supply is okay, replace the CRT.
5-133	More than one key is inoperative or has the wrong effect	1. Replace the Processor Module (A9).
5-133	Only one key is inoperative	1. Replace the defective key switch.
5-134	Any part of the nonvolatile memory fails to remember	1. Replace the Processor module (A9).
5-135	No DPL (modulation) signal on CRT	1. Check TP1 of the Audio Synthesizer for the presence of the DPL signal. If not present replace the Audio Synthesizer module. 2. Check for the DPL signal on pin 64 of the Audio Synthesizer. If not present replace the IEEE Interface module (A8), or check for the presence of the jumpers on J8 for the standard unit.

Table 5-6. System Troubleshooting (Cont)

Fault	Troubleshooting Procedure
	3. Check for the DPL signal at TP6 of the Audio Synthesizer. If not present replace the Audio Synthesizer (A6).
	4. Check for the DPL signal at TP4 of the Scope Amplifier module (A2). If not present replace the Scope/DVM control module (A3).
	5. If signal switching is okay tolhe Scope AmpI i-fier module proceed to the scope trouble-: shooting information.
No external modulation on the CRT	1. Check for modulation signal at TP7 of the, Audio Synthesizer module (A6). If not present replace the Audio Synthesizer module.
	2. Check for the modulation signal on pin 66 of the Audio Synthesizer. If not present replace the IEEE Interface module (A8), or check for the presence of the modulation jumpers on J8 for the standard unit.
	3. Continue troubleshooting at step 3 of the "no ; DPL signal on the CRT".
Frequency Counter inoperative	1. Check for presence of a 1 kHz signal at TP9 of' the Audio Synthesizer (A6). If not present check for the 10 MHz signal from the Fre-quency Standard module (A13) to the RF Synthesizer (A5). If present replace the RF Synthesizer. If not present replace the Fre-quency Standard module.
	2. If the 1 kHz signal is present check for the presence of the signal to be counted at pins 61 and 63 of the Processor I/O module (A7). If not present replace the Front Panel Inter-face Module (A12).
	3. If signal is okay up to the Processor I/O module replace the Processor I/O module.
DVM AC mode is inoperative	1. Check for DVM signal at pin 22 of Processor Interface module (A12). If not present replace the Front Panel Interface module.
	2. Check for short bursts of the DVM AC signal at TP8 of the Scope/DVM Control module (A3).

Table 5-6. System Troubleshooting (Cont)

Test Paragraph	Fault	Troubleshooting Procedure
		NOTE The DVM AC signal from the external input is multiplexed with the other signals to be measured. Thus only short bursts of the input signal will be observed at TP8. If signal is not present at TP8 replace the Scope/DVM Control module. 3. If the signal is okay to TP8 of A3, replace the Processor I/O module (A7).
5-137	DVM DC mode is inoperative	1. Check for the DC input level attenuated by factors of 10 to less than 1 volt at pin 22 of the Front Panel Interface module (A12). If not present or if greater than 1 volt, replace the' Front Panel Interface module. 2. If the signal is okay from A12, switch to the AC mode and apply an AC signal to the DVM input. Proceed from step 2 under DVM AC mode inoperative.
5-138	No horizontal sweep	1. Check for a voltage level between -2.0 VDC and +2.0 VDC at TP4 of the Scope Amplifier module (A2). If the voltage cannot be brought within range with either the vertical range attenuator or the vertical position control replace the Front Panel Interface module (A12). 2. If the voltage at TP4 is okay replace the Scope Amplifier module (A2).
5-138	No vertical display	1. Check for the input signal at TP4 of the Scope Amplifier module (A2). If not present replace the Front Panel Interface module (A12). 2. If signal is okay at TP4 replace the Scope Amplifier module.
5-138	No vertical sync	1. Check for the presence of sync pulses at pin 12 of the Scope/DVM Control module (A3) and for a nominal zero volt sync present level at pin 76. If either signal is not present replace the Scope/DVM Control module.

Table 5-6. System Troubleshooting (Cont)

Fault	Troubleshooting Procedure.
	2. If sync pulse and the syn present lines are okay replace the Scope Amplifier module (A2).
SINAD meter inoperative	1. If the DVM mode checks okay replace the Scope/DVM Control module (A3).
	2. If the DVM mode does not check okay go to the troubleshooting list for DVM AC inoperative.
No generate output	1. Remove the RF cable between the RF Synthesizer (AS) and the RF Input module (A11). Check for a nominal -10 dBm level at the Synthesizer output. If no output replace the RF Synthesizer.
	2. If the Synthesizer output is okay replace the RF Input module.
No Frequency Modulation	1. Check for modulation signal at pin 56 of the RF Synthesizer (A5). If the signal is okay replace the RF Synthesizer.
	2. If the modulation signal is not present proceed to the troubleshooting list under "no DPL (modulation) signal on CRT".
Internal wattmeter in error	1. Replace RP input module (A11).
T^o monitor function	1. Apply a 10.7MHz modulated carrier td the RF input. Check for normal receiver operation except reduced sensitivity. If receiver is not working replace the Receiver module (A4).
	2. If the receiver checks okay and the generate function is okay, replace the RF Input module (A11).
Monitor frequency error display is missing	1. Go to the troubleshooting list under "frequency counter inoperative".
Monitor frequency error is in error	1. Check for presence of IF signal at pin 91 of the Scope/DVM Control module (A3). If not present replace the Receiver module (A4).
	2. If the IF signal is present replace the Scope/DVM Control module.

Table 5-6. System Troubleshooting (Cont)

Test Paragraph	Fault	Troubleshooting Procedure
5-144	No spectrum analyzer sweep	1.. Check pin 6 of the RF Synthesizer module (A5) for a 50 Hz square wave. If not present replace the RF Synthesizer module. 2. If 50 Hz signal is present replace the Scope/ DVM Control module (A3).
5-144	Spectrum display is in error	1. Replace the Receiver module (A4).
5-145	No duplex output	1. Replace the RF Input module (A11).

Table 5-7. Test Point Identification

All test points are located near the top edge of the card and counted from left to right when facing the; component side of the card.

Module	Test Point No.	Signal Description
A2 Scope Amplifier	1	Horizontal Amp Input
	2	Horizontal Deflection Plate
	3	Horizontal Deflection Plate
	4	Vertical Amp Input
	5	Focus Tracking Voltage
	6	Vertical Deflection Plate
	7	Vertical Deflection Plate
	8	Z-Axis Modulator Output
	9	Intensity Tracking Voltage
	10	Time Base Output
A3 Scope/DVM Control	1	Vertical Character Sync
	2	Negative Peak Detector Output
	3	Gen Carrier Plus AM Level
	4	Positive Peak Detector Output
	5	Demodulated Calibrated Audio
	6	Not Used
	7	Ground
	8	Multiplexed A/D Signal
	9	Character Generator Reset
	10	Ground
	11	-8VDC
	12	+8 VDC
A6 Audio Synthesizer	1	Synth/DPL Audio
	2	DPL Clock
	3	Unfiltered DPL

Table 5-7. Test Point Identification

Module	Test Point No.	Signal Description
	4	Synth. D/A Output
	5	Ground
	6	Composite Modulation Audio
	7	Composite External Mod. Audio
	8	Synthesizer Clock 104, 857.6 Hz
	9	1 kHz Modulation Source
A7 Processor I/O	1	A/D Input
	2	Unfiltered 10.245 MHz T.V.
	3	DVM/Freq. Counter Select
	4	Frequency Counter Input
	5	Not Used
A9 Processor	1	Ground
	2	Character Clock
	3	Character Row Clock
	4	Character Dot Clock
	5	Enable
	6	Character Line Clock
	7	R/W Select
	8	Char. Gen/Processor Select
A12 Front Panel Interface	1	Attenuator Buffer Output

SECTION 6

SYSTEM INTERCONNECT AND PARTS LISTS

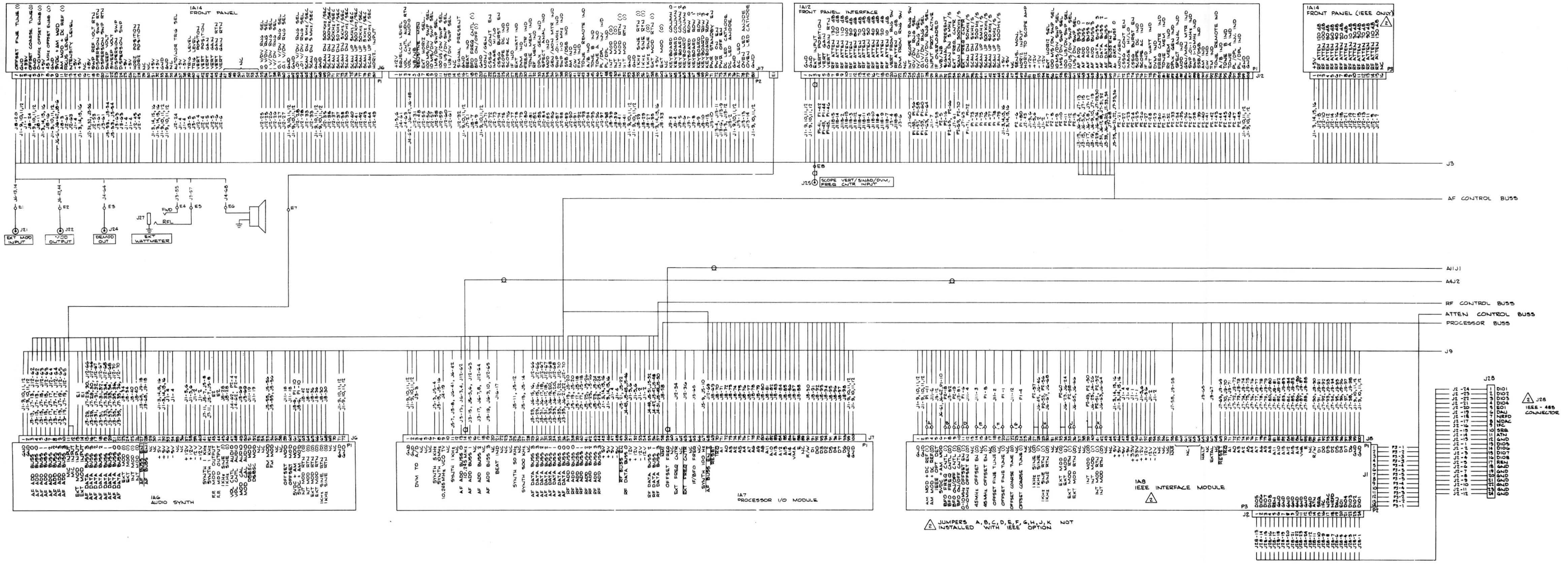

Figure 6-1. System Interconnect Diagram

(Sheet 2 of 2)

NOTES:

1. THIS DIAGRAM APPLIES TO COMMUNICATION SYSTEM ANALYZER PART NUMBER 01-P0038IJ. FOR MATRIX OF CONFIGURATIONS SEE 00-P0418AT

4 APPLIES TO UNITS WITH IEEE OPTION ONLY. FOR REFERENCE DRAWINGS SEE: 01-P0038IJ003, 01-P0038IJ004

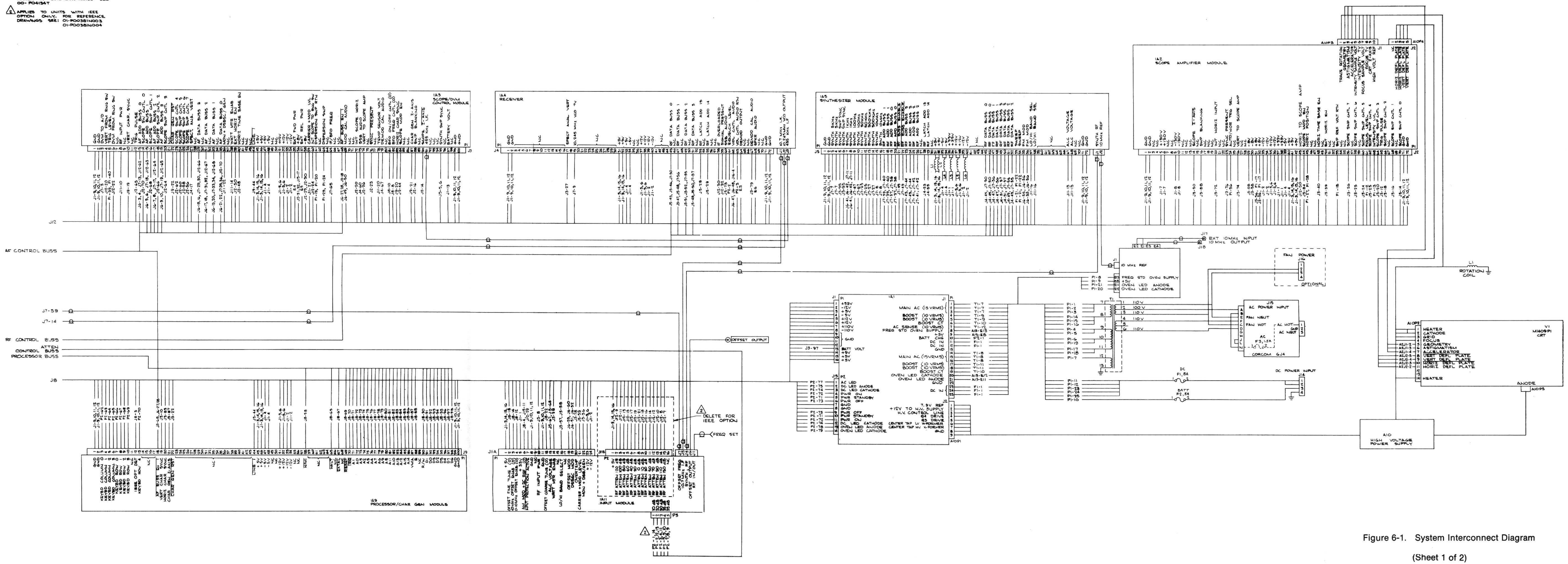

Figure 6-1. System Interconnect Diagram

(Sheet 1 of 2)

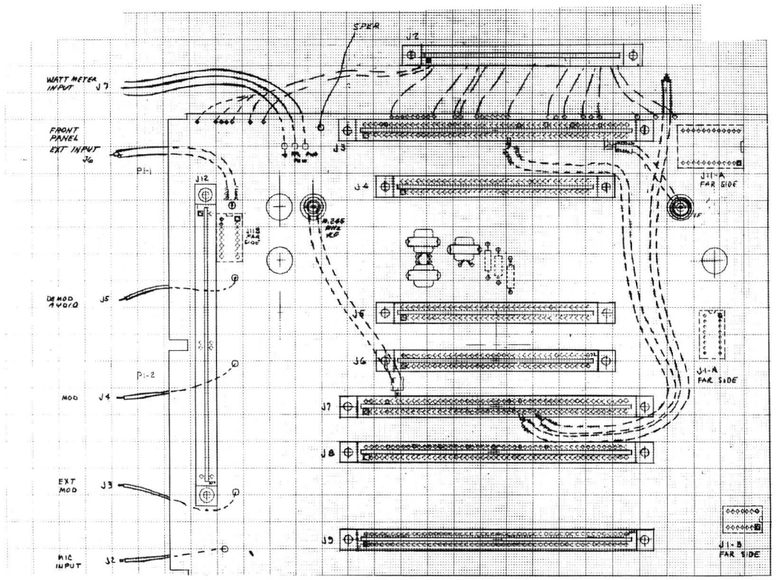

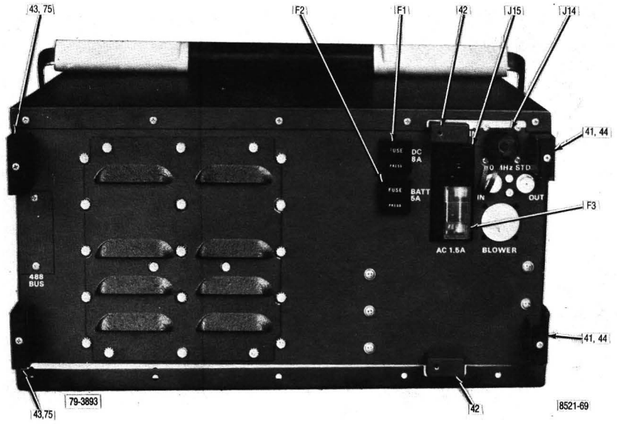

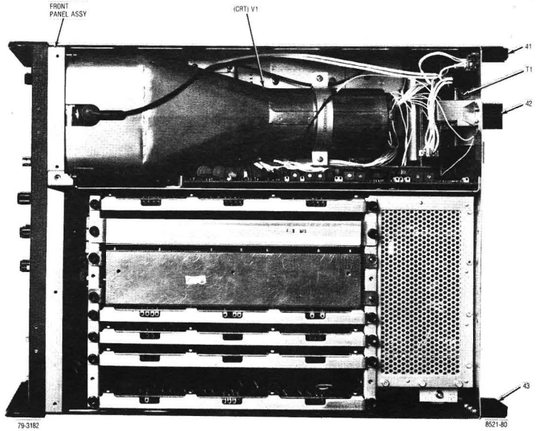

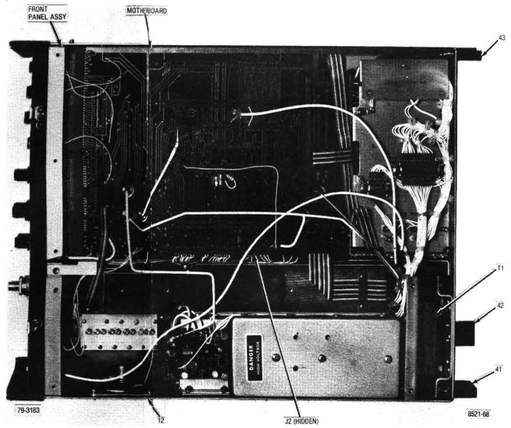

Figure 6-2. Motherboard Assembly Parts Locat or RTL-4060A

Find No.	Qty. Req.	Part Number	Nomenclature	Part Value
	1	15-80335A44	COVER, SYSTEM,TOP	
	1	15-80335A69	COVER, SYSTEM	
	1	55-80335A58	HANDLE, BAIL	
	1	55-80335A73	HANDLE,BAIL	
	1	55-80335A72	HANDLE,MOLDED	
	1	33-14232A09	IDENTIFICATION PLATE	
	2	15-80335A59	COVER,HANDLE	
	1	01-P00249N002	FRONT COVER ASSY	
	2	55-80335A89	HINGE	
	10	MS35206-213	SCREW	4-40X1/4
	22	03-80335A97	SCREW,PH BLACK	6-32X.312
	4	MS51957-27	SCREW	6-32X5/16
	4	MS35338-136	WASHER	NO.6
	4	MS15795-806	WASHER	NO.6
	22	04-80335A99	WASHER,FLAT BLACK	NO.6
	22	MS35338-136B	WASHER,LOCK BLACK	NO.6
	2	55-847016	STRIKE,CATCH	
	2	MS24693-C49	SCREW	8-32X.438
	10	MS35338-40	WASHER,LOCK	NO.4
	10	NAS620C4L	WASHER,FLAT	NO.4
	1	58-84300A98	CONN,ADAPTER	N-BNC
		30-P04147T001	CABLE ASSEMBLY,IEEE	24 PIN
	AR		WIRE	26
	AR	11-14167A10	INK	WHITE
	AR	SN63WRP3	SOLDER	
	AR	11D84308A11	PAINT	SHADOW BRONZE
001	1	01-80304A57	FRONT PANEL ASSEMBLY	
002	1	27-80335A01	CHASSIS, SYSTEM	
003	1	64-P00260N001	PLATE MOUNTING; PWR S	A10/A11
004	5	MS35206-226	SCREW,PH	6-32X.250
005	4	66602-1	CONTACT,PIN	
006	26	MS35206-214	SCREW,PH	4-40X.312
007	60	MS27183-3	WASHER,FLAT	NO.4
008	60	MS35338-40	WASHER,LOCK	NO.4
009	12	MS24693-S24	SCREW,FLHD	6-32X1/4
010	AR		WIRE	22 WHT
011	AR	SN63WRMAP3	SOLDER	
012	1	50D83205B03	SPEAKER	
013	1	26-80335A54	SHIELD, CRT	
014	1	42-P00481N001	BRACKET,CRT SHIELD	
015	1	26-P06847R001	MAGNETIC SHIELD	
016	2	3-134169	SCREW,THD FORMING	
017	15	3-134185	SCREW,THD FORMING	6-32X.250
021	2	348-8-7-7	FUSEHOLDER	
028	2	42-14060A01	CLAMP ASSEMBLY, CONNE	MALE-SCREWLOCK
029	1	RTL-4060A	MOTHERBOARD ASSEMBLY	
034	2	206903-1	SEALING CAP	
035	1	36-80335A88	KNOB,SPECIAL	
040	1	75-80335A51	ISOLATOR, CRT,BOTTOM,	
041	2	07-80335A92	FOOT; REAR CHASSIS	
042	2	07-80335A93	FOOT,BATTERY HOLDER	
043	2	07-80335A94	FOOT,BATTERY HOLDER,L	
044	2	75-80335A60	FOOT,PLASTIC	
047	5	MS35206-228	SCREW	6-32X.375
048	3	MS51957-27B	SCREW,PH BLACK	6-32X.312
049	28	MS35206-215	SCREW	4-40X.375
050	12	MS27183-5	WASHER,FLAT	NO.6
051	3	MS15795-805B	WASHER,FLAT BLACK	NO.6
052	3	MS35338-136B	WASHER,LOCK BLACK	NO.6
053	12	MS35338-41	WASHER,LOCK	NO.6
054	10	MS35649-242	NUT,HEX	4-40
057	2	64-P00301N001	PLATE,THREADED	

Find No.	Qty. Req.	Part No.	Nomenclature	Part Value
058	1	30-P06804R001	CABLE ASSEMBLY A11/A4	10.7 MHZ,IF
059	1	30-P06805R001	CABLE ASSEMBLY,SYNTH	A5/A11
060	1	30-P06806R001	CABLE ASSEMBLY,OFFSET	A11/MOTHERBOARD
061	1	30-P06807R001	CABLE ASSEMBLY 455KHZ	A4/MOTHERBOARD
062	1	30-P06808R001	CABLE ASSEMBLY 10.245	A4/MOTHERBOARD
063	1	30-P06809R001	CABLE ASSEMBLY 10MHZ	A13/A4
066	2	29-15159A03	TERMINAL,LUG	
068	AR		WIRE	16 WHT
069	AR	SN63WRP3	SOLDER	
070	AR	M23053/5-103-9	INSULATION SLEEVING	.093 WHT
071	AR		WIRE	20 WHT
072	AR		TAPE	NATURAL
073	AR		WIRE	24 WHT
074	AR		INSULATION TAPE,MYLAR	1IN YELLOW
075	2	75-80346A24	FOOT,PLASTIC	
076	2	66601-2	SOCKET	
077	1	MS35489-9	GROMMET	
078	AR		COMPOUND,THD LKG,BLUETYPE II,GR N,242	
079	AR		ENCAPSULANT SILICONE	
080	1	32-P04135T001	PAD,CRT CLAMP	
081	AR		WIRE	20
082	2	MS35206-213	SCREW	4-40X.250
083	2	MS35206-231	SCREW	6-32X.625
084	2	9224-A-140-10A	SPACER	.250DX.25L
085	3	33-14232A09	IDENTIFICATION PLATE	HIGH VOLTAGE
086	1	14-P01317V001	INSULATOR	FP/INTERFACE BD
A 001	1	RTP-1000A	LOW VOLTAGE PWR SUPPL	A1
A 002	1	RTL-4007A	SCOPE HORZ/VERT AMP	
A 003	1	RTC-4008A	SCOPE/DVM CONTROL	
A 004	1	RTL-1002A	RECEIVER ASSY A4	
A 005	1	RTC-1001A	SYNTHESIZER A5	
A 006	1	RTC-4011A	AUDIO SYNTHESIZER A6	
A 007	1	RTC-4012A	PROCESSOR I/O A7	
A 008	1	RTC-4013A	IEEE INTERFACE(2002A SYSTEM ONLY)	
A 009	1	RTC-4014 A	MICRO PROC CHAR GEN	
A 015	1	RTL-4054A	BLOWER ASSEMBLY	
A 010	1	RTP-1001A	HIGH VOLTAGE PWR SUPP	A10
A 011	1	RTC-1003A	RF FRONT END	A11
A 012	1	RTL-4045A	FRT PANEL INTRF ASSY	
A 013	1	RTL-1004A	FREQUENCY STANDARD	A13
F 001	1	F03A250V8A	FUSE	250V-8A
F 002	1	F02A250V5A	FUSE,CARTRIDGE	250V-5A
F 003	1	F02A250V1-1/2A	FUSE,CARTRIDGE	250V-1 1/2A
J 002	1	MP-0100-36-DW-6H	CONNECTOR	
J 011	1	DB-25S	CONNECTOR	25 PIN
J 014	1	206061-1	CONNECTOR,BATTERY	4-PIN MALE
J 015	1	6J4	CONNECTOR	POWER INPUT
J 016	1	206430-1	CONNECTOR,BLOWER	4 CONTACT
T 001	1	24-P00243N001	TRANSFORMER, LINE	
V 001	1	95-80335A48	CATHODE RAY TUBE	

ASSEMBLY PARTS LIST

MOTHERBOARD ASSEMBLY
RTL-4060A

Find No.	Qty. Req.	Part No.	Nomenclature	Part Value
J 003	1	MP-0100-50-DW-6H	CONNECTOR	
J 004	1	MP-0100-36-DW-6H	CONNECTOR	
J 005	1	MP-0100-36-DW-6H	CONNECTOR	
J 006	1	MP-0100-36-DW-6H	CONNECTOR	
J 007	1	MP-0100-50-DW-6H	CONNECTOR	
J 008	1	MP-0100-50-DW-6H	CONNECTOR	
J 009	1	MP-0100-50-DW-6H	CONNECTOR	
J 010	1	MP-0100-50-DW-6H	CONNECTOR	
L 001	1	25-83127G01	CHOKE,AUDIO	
L 002	1	25-83127G01	CHOKE,AUDIO	
L 003	1	25-83127G01	CHOKE,AUDIO	
L 004	1	MS91189-33	COIL	47UH
L 005	1	MS90539-07	COIL	470UH
L 006	1	MS91189-37	COIL	100UH

ASSEMBLY PARTS LIST

System Top Level

SECTION 7

LOW VOLTAGE POWER SUPPLY (A1)

7-1. General. The low voltage power supply converts either an AC line input or a DC supply input to the DC operating voltages required by the system. Appropriate protection circuits are incorporated within the supply to protect both the supply and the system in vhe event of certain common malfunctions. A block diagram of the Low Voltage Supply module is shown in figure 7-1 with its schematic shown in figure 7-2.

7-2. Input Power Control. Whenever AC power is connected to the unit the DC BUS within the supply is supplied by the AC rectifier and filter circuitry. The AC sense circuit provides a control voltage whenever AC is present that isolates the DC input from the DC bus and drives the front panel AC indicator.

7-3. With power on the DC buss the power supply control circuitry determines the operating mode of the power supply. With the unit "OFF", the battery charger control circuit is turned on and the frequency standard control and chopper generator circuits are turned off. When the unit is in"STANDBY", the chopper generator is off and the frequency standard supply and battery charger are enabled. Finally with the unit "ON", the frequency standard supply and the chopper generator are enabled and the battery charger is off. Thus the battery is charged in off and standby modes, and the frequency standard operates in standby and on modes.

7-4. The voltage for the battery charger is boosted above the nominal DC bus voltage to 32 volts by the AC boost winding. This increase in voltage is necessary for proper charge operation.

7-5. For operation from a DC input, the AC power must be removed from the unit disabling the AC sense voltage. With the AC power removed and the unit off, no power is present on the DC bus. When the unit is switched to the standby mode, the DC relay closes, connecting the DC input to the DC bus and the supply voltage to the frequency standard is enabled. Then with the unit turned on the chopper generator is enabled and normal operation occurs.

7-6. DC Output Control. Regulation of the DC output voltages is accomplished by regulating only the +5V output. The transformer winding ratios determing the other output voltages with respect to the +5 volt output. The +5V output is compared with a stable reference voltage and the resultant control voltage is used to determine the on time of the pulse-width modulator, thus regulating the input voltage to the chopper circuits.

7-7. The chopper generator provides the 7.9 volt reference voltage, a 20 KHz square wave chopper drive signal, and a 20 KHz triangle waveform output for pulse-width modulator control. The pulse-width control comparator compares the triangle waveform with the control voltage. If the control voltage is equal to the mean DC voltage of the triangle wave the pulse modulator has a 50% duty cycle. For control voltages above and below the mean value the duty cycle is proportionally increased or decreased.

7-8. The filtered DC output from the pulse-width modulator is chopped through the primary of the output transformer at the 20 KHz rate. The DC output is alternately switched between the upper half and the lower half of the primary winding. The current through the primary center tap is detected by a current transformer and its output used for overcurrent protection.

7-9. Protection Circuitry. The power supply is protected against shorted outputs, high internal temperatures, and low or high DC buss voltages. In each case the protection circuit pulls the control voltage line to ground to open up the pulse-width modulator and shut down the supply.

7-10. Short circuit protection is implemented by monitoring the current in the primary winding of theoutput transformer. If a secondary output is shorted the primary current will increase significantly causing the overcurrent detector to pull the control line low shutting down the supply. However, with the supply shut down primary current will cease and the overcurrent detector will release the control line. With the control line released the supply will come back on. If the short is still present the cycle will repeat itself. Delay is provided in the overcurrent detector so that with a shorted output the supply cycles at about a 0.5 second rate.

7-11. Overtemperature protection is obtained by using a thermal switch mounted on the most heat critical capacitor. If the capacitors temperature exceeds the temperature setting of the thermal switch, the switch closes to ground shorting the control line and shutting down the supply. Normal operation of the supply will be resumed when the temperature returns to a safe operating level.

7-12. Protection for high or low DC and AC line inputs is provided by monitoring the voltage on the DC Bus. If the bus voltage exceeds 20 volts or if the voltage falls below 10 volts, the shutdown circuitry pulls the control line to ground shutting down the supply. When the bus voltage returns to normal limits, supply operation automatically resumes.

7-13. High Voltage Supply Control. A 12 volt regulator from the DC BUS provides the bias voltage for the High Voltage Power Supply (AIO). The primary power for the High Voltage Supply comes from the high voltage control circuitry. A control line from the high voltage supply regulates the input voltage to the high voltage transformer. The current used in the high voltage supply is the bias current for the pulse width modulator circuitry for improved power supply efficiency.

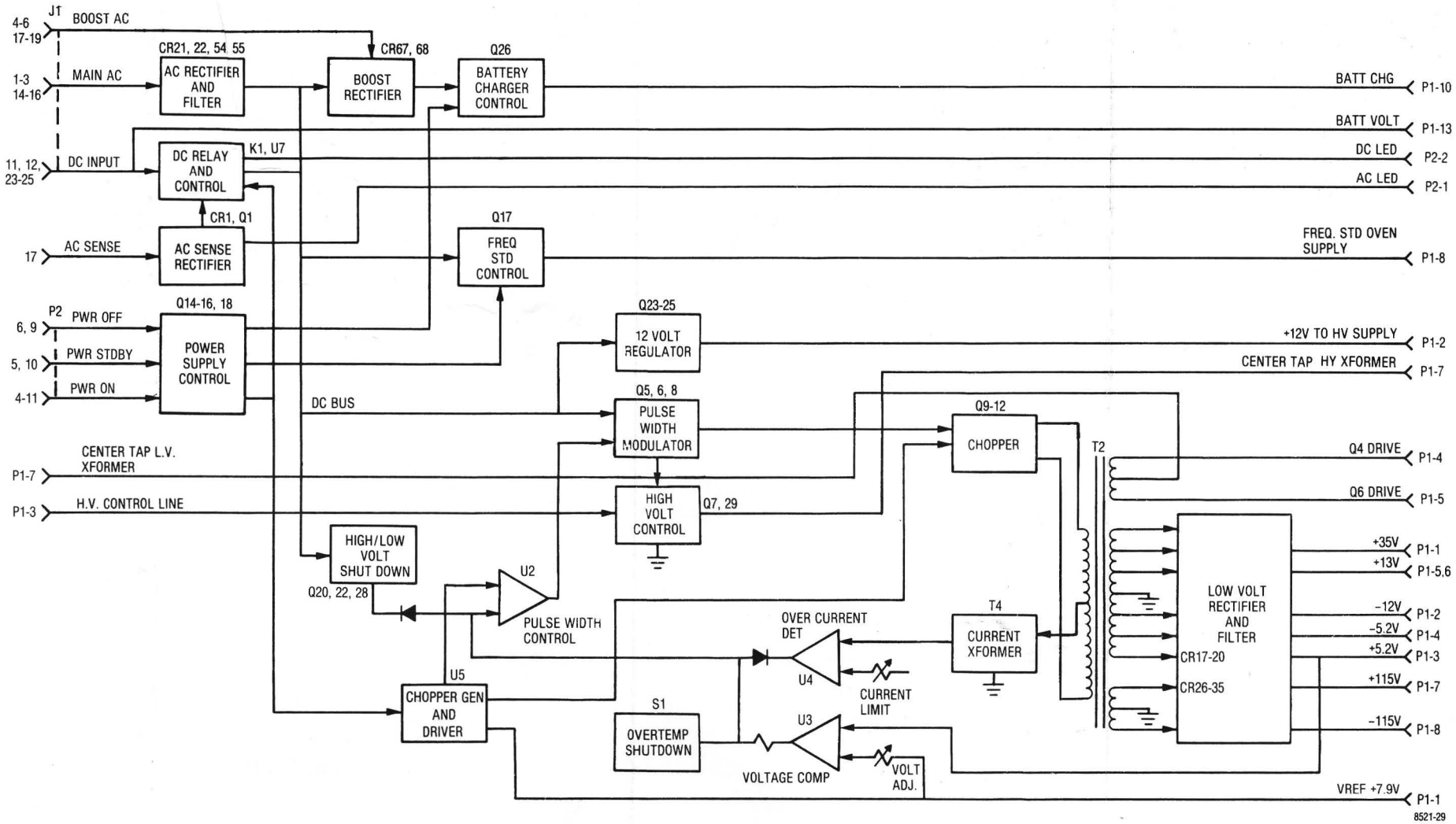

Figure 7-1. Low Voltage Power Supply A1 Block Diagram

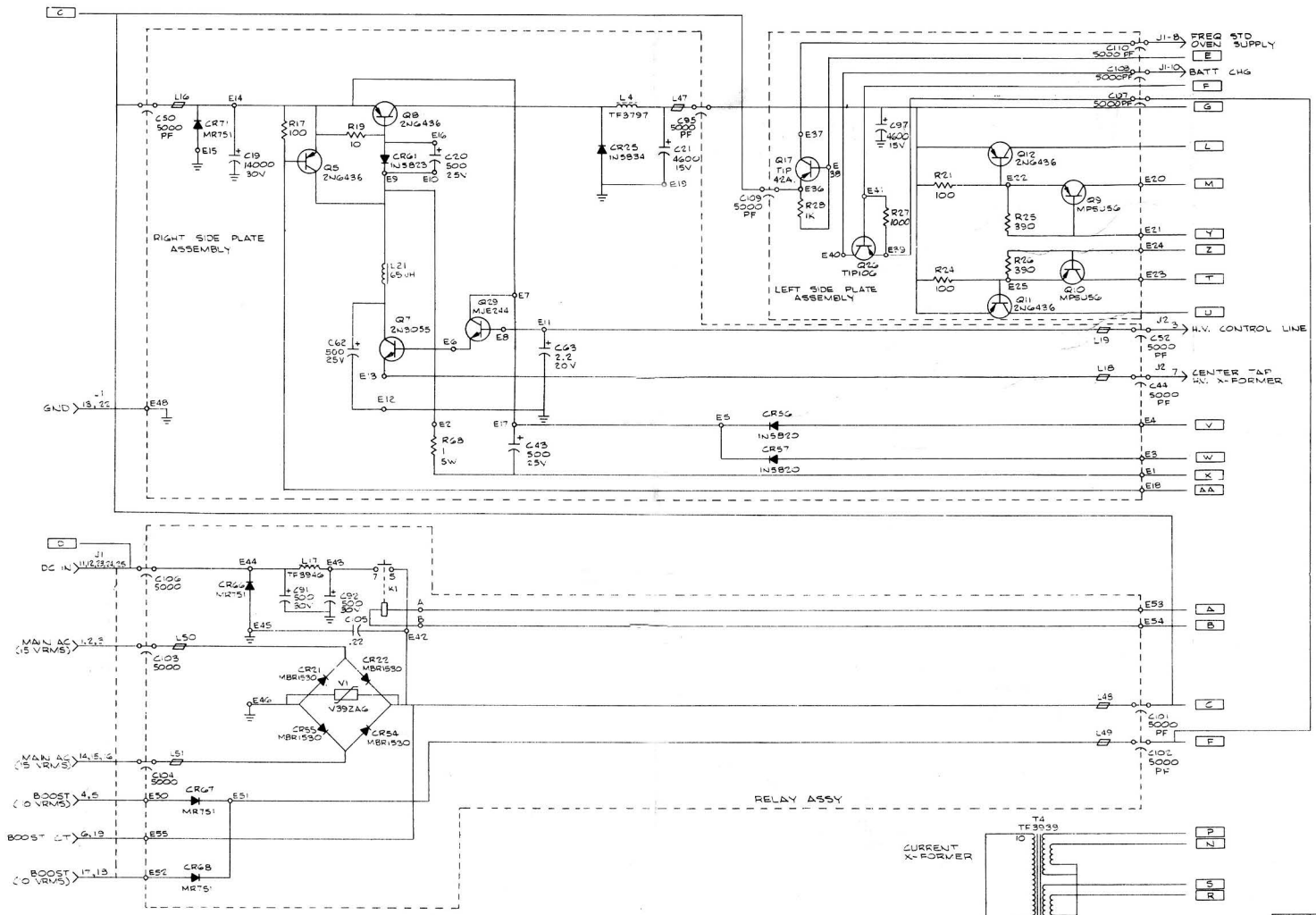

REF DES	DEVICE TYPE	GND	NO CONN
J1	NOT USED		
U1	MLM301	1,4	5,6
U2	CA3140	4	1,5,8
U3	CA3140	4	1,5,8
U4	MC3370	6,12	3,14
U5	LM318	3	
U6	MC7812		

NOTES

1. PARTIAL REFERENCE DESIGNATIONS ARE SHOWN. FOR COMPLETE DESIGNATION PREFIX WITH 1A1.
2. FOR REFERENCE DRAWINGS REFER TO: 01-P.(4222).
3. UNLESS OTHERWISE SPECIFIED:
   ALL RESISTORS ARE IN OHMS ±5 PCT, 1.4 WATT.
   ALL CAPACITORS ARE IN UF.
   ALL INDUCTORS ARE AS MARKED
   ALL VOLTAGES ARE DC.
4. 9570 IS MOTOROLA 48-R0086957-0
5. SELECT IN TEST.
6. 957 IS MOTOROLA 48-R0086957-1

Figure 7-2. Low Voltage Power Supply A1

Schematic Diagram (Sheet 1 of 2)

(RTP-1000A)

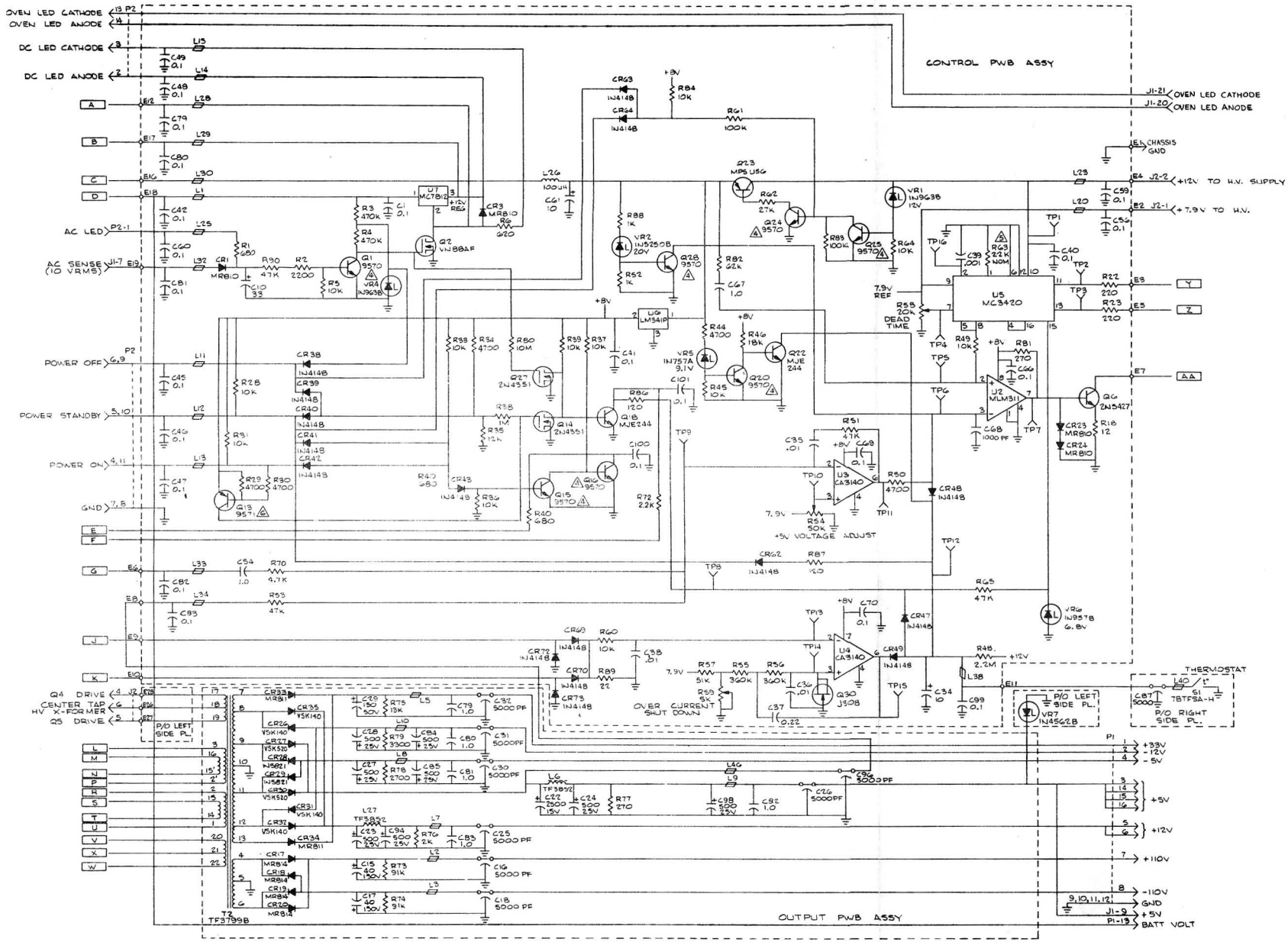

Figure 7-2. Low Voltage Power Supply A1

Schematic Diagram (Sheet 2 of 2)

(RTP-1000A)

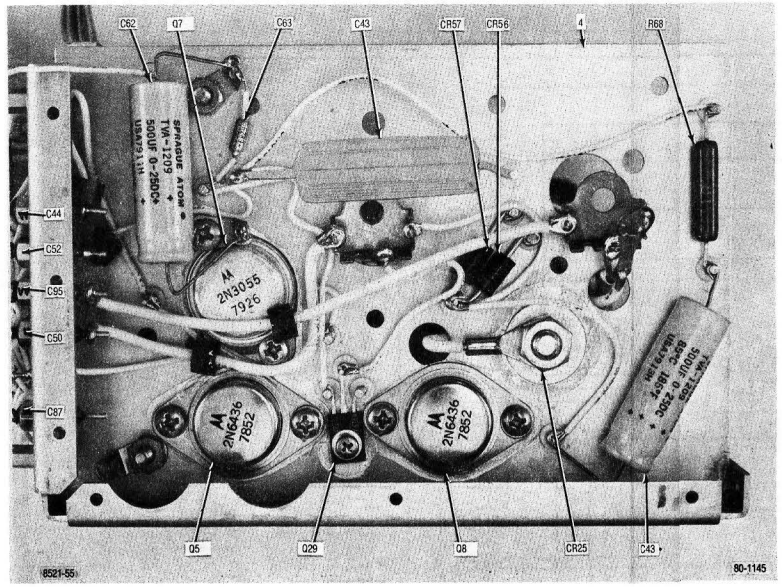

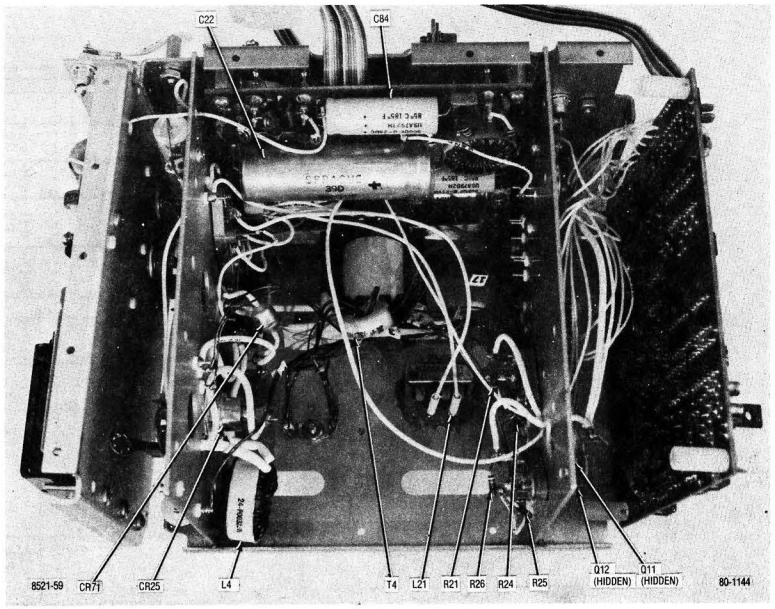

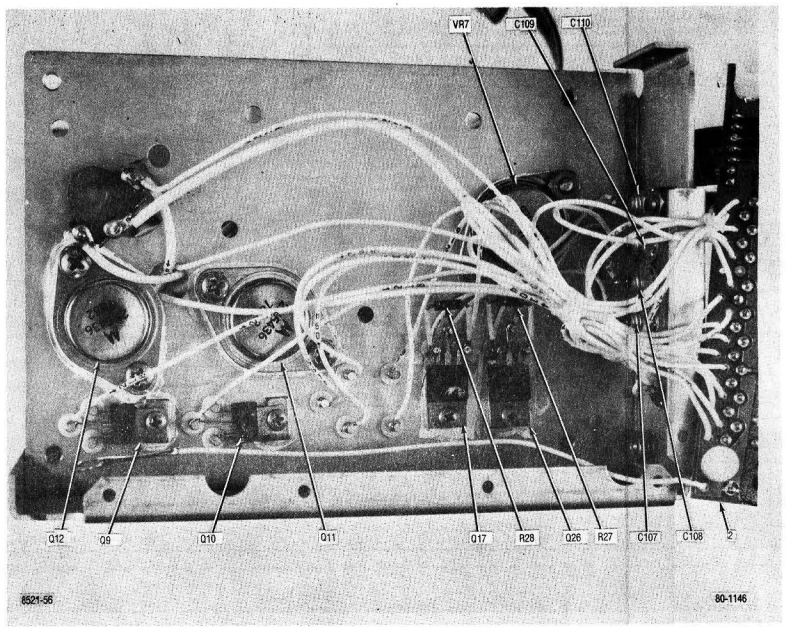

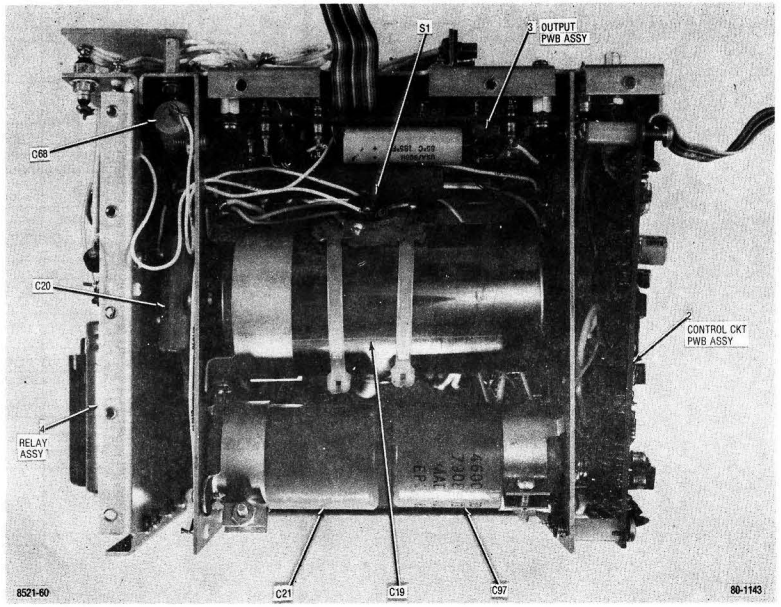

Figure 7-3. Low Voltage Power Supply Parts Locator

Low Voltage Power Supply A1
RTP-1000A

Find No.	Qty. Req.	Part No.	Nomenclature	Part Value
001	1	27-80335A42	CHASSIS ASSY	
002	1	RTP-4001A	CONTROL CIRCUIT PWB A	
003	1	RTP-4008A	OUTPUT PWB ASSY	
004	1	01-80304A40	RELAY ASSEMBLY	
005	1	15-80335A44	COVER	
006	1	64-P00310N001	PLATE,PROTECTIVE-LARG	
007	2	4586-97A	CLAMP,CAPACITOR	
008	1	64-P00311N001	PLATE,PROTECTIVE-SMAL	
009	1	4586-48	CLAMP,CAPACITOR	
010	4	MS35206-248	SCREW	8-32X.875
011	29	3-134185	SCREW,THD FORMING	6-32X.250
012	3	MS35207-264	SCREW	10-32X.625
013	6	MS27183-8	WASHER,FLAT	NO.10
014	6	MS35338-43	WASHER,LOCK	NO.10
016	5	MS35206-228	SCREW	6-32X.375
017	4	MS27183-5	WASHER,FLAT	NO.6
018	4	MS35338-41	WASHER,LOCK	NO.6
019	9	MS35649-262	NUT,HEX	6-32
020	1	MS35489-6	GROMMET	
021	2	07-P00305N001	BRACKET,CONNECTOR	
022	AR	SN63WRMAP3	SOLDER	
024	AR		WIRE	22 WHT
025	27	29-15106A63	TERMINAL,FEEDTHRU-INS	
026	2	07-P00305N002	BRACKET,CONNECTOR	
027	3	29-P00307N001	TERMINAL,MULTIPLE	
029	4	4505-632-A-9	SPACER,HEX	
030	5	MD-3452-G	SOCKET	
031	7	C9029-4Z	CLIP,FASTENER	
032	2	42-14063A01	CLAMP ASSEMBLY	
033	2	B09002A001	WASHER,RECT	
034	5	14-15141A01	INSULATOR	
036	1	B52200F006	WASHER,COMP	
037	3	B52600F003	WASHER,MICA INSUL	
038	4	B51547F015	BUSHING	
040	5	NAS662-2-8	SCREW	2-56X.500
041	5	MS24693-S26	SCREW	6-32X3/8
042	4	MS24693-S2	SCREW,FH	4-40X1/4
043	4	MS35206-216	SCREW,PH	4-40X.438
045	10	MS35206-230	SCREW	6-32X.500
047	4	MS77068-2	TERMINAL,LUG	NO.6
048	7	MS51861-14	SCREW	.112-24X.375
049	2	29-15122A10	TERMINAL	
050	1	DE-9S	CONNECTOR	
051	1	DB-25P	CONNECTOR	
052	9	MS27183-3	WASHER,FLAT	NO.4
053	8	MS35338-40	WASHER,LOCK	NO.4
054	5	MS35649-242	NUT,HEX	4-40
057	6	011-1046-000-479	TERMINAL,FEEDTHRU INS	
058	2	B08853A001	WASHER,MICA-RECT	
059	10	MS27183-2	WASHER,FLAT	NO.2
060	1	MS35206-217	SCREW,PH	4-40X.500
061	1	B51547F013	WASHER,TEFLON	
062	2	B52600F002	INSULATOR,MICA	
063	1	B52595F019	LUG	
064	1	B51568F029	NUT	
065	AR	G-642	COMPOUND,THERMAL	
066	1	B51567F025	WASHER,FLAT	
067	1	B51566F011	WASHER, LOCK	
068	AR		WIRE	16 WHT
069	AR		WIRE	14 WHT
070	AR		WIRE	20 WHT
071	5	MS35338-39	WASHER,LOCK	NO.2
072	5	MS35649-222	NUT,HEX	2-56
073	3	9317-A-194	SPACER,ROUND	10X.25
074	AR	RTV3145	ADHESIVE,SILICONE	
077	1	MS77068-1	TERMINAL,LUG	4
078	AR		TAPE	NATURAL
079	AR	M23053/5-103-9	INSULATION SLEEVING	.093 WHT
080	25	MS3367-5-9	STRAP,CABLE	NATURAL 4.5
081	AR	11-14167A01	INK	BLACK
082	AR		WIRE,BUS	22
083	2	SST21-M	STRAP,CABLE	8.0
084	AR		INSULATION SLEEVING	22 WHT
085	AR		WIRE	20 WHT
086	1	01-80304A56	CABLE ASSEMBLY	14PIN,DUALSIDE 12LG
087	AR		INSULATION SLEEVING	16 WHT
088	4	MS35206-215	SCREW	4-40X.375
089	3	MS35207-261	SCREW	10-32X.375
090	AR	MS3367-4-9	STRAP	NATURAL
091	12	MS35333-37	WASHER	NO.6
092	4	MS35333-37	WASHER	NO.6
093	1	ABMM-A-C	TIE MOUNT,CABLE	
C 019	1	36D143G030BC2A	CAPACITOR	14000UF-30V
C 020	1	500D507G025FH7	CAPACITOR	500UF-25V
C 021	1	36D462G015AA2A	CAPACITOR	4600UF-15V
C 043	1	500D507G025FH7	CAPACITOR	500UF-25V
C 044	1	2499-003X5W502AA	CAPACITOR	5000PF-GWV-500
C 050	1	2499-003X5W502AA	CAPACITOR	5000PF-GMV-500
C 052	1	2499-003X5W502AA	CAPACITOR	5000PF-GMV-500
C 062	1	500D507G025FH7	CAPACITOR	500UF-25V
C 063	1	M39003/01-2283	CAPACITOR	2.2UF-10-20
C 087	1	2499-003X5W502AA	CAPACITOR	5000PF-GMV-500
C 095	1	2499-003X5W502AA	CAPACITOR	5000PF-GMV-500
C 097	1	36D462G015AA2A	CAPACITOR	4600UF-15V
C 107	1	2499-003X5W502AA	CAPACITOR	5000PF-GMV-500
C 108	1	2499-003X5W502AA	CAPACITOR	5000PF-GMV-500
C 109	1	2499-003X5W502AA	CAPACITOR	5000PF-GMV-500
C 110	1	2499-003X5W502AA	CAPACITOR	5000PF-GMV-500
CR025	1	48-80345A91	DIODE	40V-40A
CR056	1	48-80345A89	DIODE	20V 3AMP
CR057	1	48-80345A89	DIODE	20V 3AMP
CR061	1	48-6411A15	DIODE	20V 5AMP
CR071	1	48-80345A67	DIODE	100V
L 004	1	24-P00323N001	CHOKE	57MH
L 016	1	10273	FERRITE BEAD	
L 018	1	10273	FERRITE BEAD	
L 019	1	10273	FERRITE BEAD	
L 021	1	25C84148F01	COIL	65UH
L 040	1	10273	FERRITE BEAD	
L 047	1	10273	FERRITE BEAD	
Q 005	1	48-80345A61	TRANSISTOR	
Q 007	1	48-869302	TRANSISTOR	
Q 008	1	48-80345A61	TRANSISTOR	
Q 009	1	48-80345A50	TRANSISTOR	
Q 010	1	48-80345A50	TRANSISTOR	
Q 011	1	48-80345A61	TRANSISTOR	
Q 012	1	48-80345A61	TRANSISTOR	
Q 017	1	48-80345A56	TRANSISTOR	
Q 026	1	48-80345A55	TRANSISTOR	
Q 029	1	48-80345A43	TRANSISTOR	
R 017	1	6S124A25	RESISTOR	100-5-1/4
R 019	1	6S124A01	RESISTOR	10-5-1/4
R 021	1	6S124A25	RESISTOR	100-5-1/4
R 024	1	6S124A25	RESISTOR	100-5-1/4
R 025	1	6S124A39	RESISTOR	390-5-1/4
R 026	1	6S124A39	RESISTOR	390-5-1/4
R 027	1	6S124A49	RESISTOR	1K-5-1/4
R 028	1	6S124A49	RESISTOR	1K-5-1/4
R 068	1	243E1R05	RESISTOR	1-5-5
S 001	1	7BTF5A-14	THERMOSTAT	
T 004	1	24-P00327N001	TRANSFORMER	
VR007	1	48-80345A79	DIODE	

ASSEMBLY PARTS LIST
Low Voltage Power Supply
(Sheet 1)

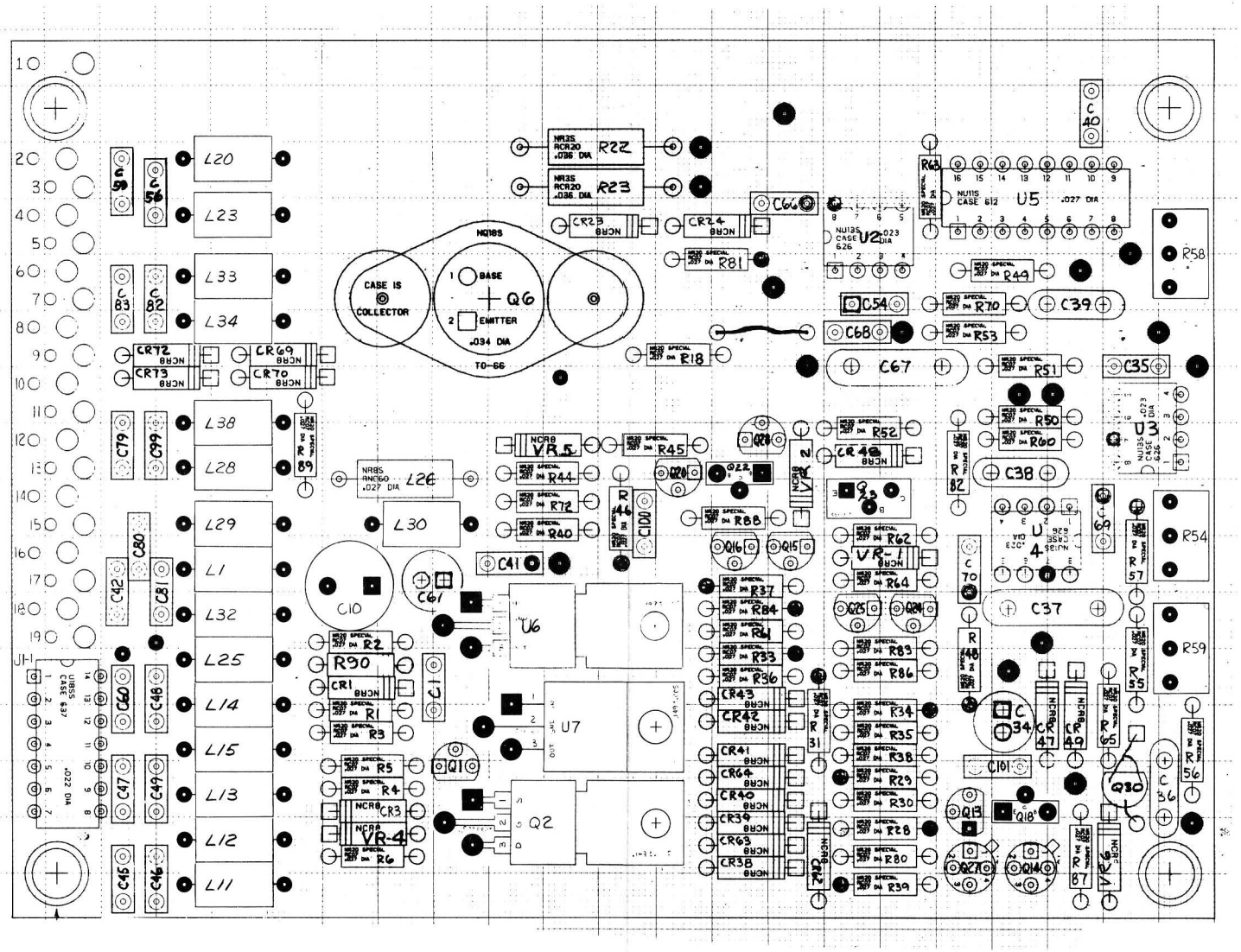

Low Voltage Power Supply Control Assy A1A1

Control Circuit PWB A1A1
RTP-4001A

Find No.	Qty. Req.	Part No.	Nomenclature	Part Value
A1				
001	1	84-P00471N001	PWB,LVPS CONTROL	
002	4	SRS8-10N	SUPPORT,SPACER	
004	AR	SN63WRMAP3	SOLDER	
006	2	MS35206-214	SCREW,PH	4-40X.312
007	2	MS27183-3	WASHER,FLAT	NO.4
008	2	MS35338-40	WASHER,LOCK	NO.4
009	2	MS35649-242	NUT,HEX	4-40
010	AR		WIRE	22
C 001	1	3439050E104M	CAPACITOR	.1UF-20-50
C 010	1	503D336G050CD	CAPACITOR	33UF-50V
C 034	1	23D84665F01	CAPACITOR	10UF-25V
C 035	1	M39014/02-1338	CAPACITOR	.01UF-10-200
C 036	1	21D82428B62	CAPACITOR	.01UF80-20-200
C 037	1	M39014/02-1356	CAPACITOR	.22-10-50
C 038	1	21D82428B62	CAPACITOR	.01UF80-20-200
C 039	1	21D82187B14	CAPACITOR	1000PF-10-100
C 040	1	3439050E104M	CAPACITOR	.1UF-20-50
C 041	1	3439050E104M	CAPACITOR	.1UF-20-50
C 042	1	3439050E104M	CAPACITOR	.1UF-20-50
C 045	1	3439050E104M	CAPACITOR	.1UF-20-50
C 046	1	3439050E104M	CAPACITOR	.1UF-20-50
C 047	1	3439050E104M	CAPACITOR	.1UF-20-50
C 048	1	3439050E104M	CAPACITOR	.1UF-20-50
C 049	1	3439050E104M	CAPACITOR	.1UF-20-50
C 054	1	23D83441B15	CAPACITOR	1.0UF-20-35
C 056	1	3439050E104M	CAPACITOR	.1UF-20-50
C 059	1	3439050E104M	CAPACITOR	.1UF-20-50
C 060	1	3439050E104M	CAPACITOR	.1UF-20-50
C 061	1	23D84665F01	CAPACITOR	10UF-25V
C 066	1	3439050E104M	CAPACITOR	.1UF-20-50
C 067	1	5CZ5U105D8500C5	CAPACITOR	1UF-50
C 068	1	21D82187B14	CAPACITOR	1000PF-10-100
C 069	1	3439050E104M	CAPACITOR	.1UF-20-50
C 070	1	3439050E104M	CAPACITOR	.1UF-20-50
C 079	1	3439050E104M	CAPACITOR	.1UF-20-50
C 080	1	3439050E104M	CAPACITOR	.1UF-20-50
C 081	1	3439050E104M	CAPACITOR	.1UF-20-50
C 082	1	3439050E104M	CAPACITOR	.1UF-20-50
C 083	1	3439050E104M	CAPACITOR	.1UF-20-50
C 099	1	3439050E104M	CAPACITOR	.1UF-20-50
C 100	1	3439050E104M	CAPACITOR	.1UF-20-50
C 101	1	3439050E104M	CAPACITOR	.1UF-20-50
CR001	1	48-80345A68	DIODE	50V-1A
CR003	1	48-80345A68	DIODE	50V-1A
CR023	1	48-80345A68	DIODE	
CR024	1	48-80345A68	DIODE	
CR038	1	48-84463K02	DIODE	
CR039	1	48-84463K02	DIODE	
CR040	1	48-84463K02	DIODE	
CR041	1	48-84463K02	DIODE	
CR042	1	48-84463K02	DIODE	
CR043	1	48-84463K02	DIODE	
CR047	1	48-84463K02	DIODE	
CR048	1	48-84463K02	DIODE	
CR049	1	48-84463K02	DIODE	
CR062	1	48-84463K02	DIODE	
CR063	1	48-84463K02	DIODE	
CR064	1	48-84463K02	DIODE	
CR069	1	48-84463K02	DIODE	
CR070	1	48-84463K02	DIODE	
CR072	1	48-84463K02	DIODE	
CR073	1	48-84463K02	DIODE	
L 001	1	24-83961B01	CHOKE,RF	
L 011	1	24-83961B01	CHOKE,RF	
L 012	1	24-83961B01	CHOKE,RF	
L 013	1	24-83961B01	CHOKE,RF	
L 014	1	24-83961B01	CHOKE,RF	
L 015	1	24-83961B01	CHOKE,RF	
L 020	1	24-83961B01	CHOKE,RF	
L 023	1	24-83961B01	CHOKE,RF	
L 025	1	24-83961B01	CHOKE,RF	
L 026	1	WEE-100	INDUCTOR	100UH
L 028	1	24-83961B01	CHOKE,RF	
L 029	1	24-83961B01	CHOKE,RF	
L 030	1	24-83961B01	CHOKE,RF	
L 032	1	24-83961B01	CHOKE,RF	
L 033	1	24-83961B01	CHOKE,RF	
L 034	1	24-83961B01	CHOKE,RF	
L 038	1	24-83961B01	CHOKE,RF	
Q 001	1	48R00869570	TRANSISTOR	
Q 002	1	48-80345A58	TRANSISTOR	
Q 006	1	48-80345A60	TRANSISTOR	
Q 013	1	48R00869571	TRANSISTOR	
Q 014	1	48-80345A59	TRANSISTOR	
Q 015	1	48R00869570	TRANSISTOR	
Q 016	1	48R00869570	TRANSISTOR	
Q 018	1	48-80345A43	TRANSISTOR	
Q 020	1	48R00869570	TRANSISTOR	
Q 022	1	48-80345A43	TRANSISTOR	
Q 023	1	48-80345A50	TRANSISTOR	
Q 024	1	48R00869570	TRANSISTOR	
Q 025	1	48R00869570	TRANSISTOR	
Q 027	1	48-80345A59	TRANSISTOR	
Q 028	1	48R00869570	TRANSISTOR	
Q 030	1	48-80335A79	TRANSISTOR	
R 001	1	6S124A45	RESISTOR	680-5-1/4
R 002	1	6S124A57	RESISTOR	2.2K-5-1/4
R 003	1	6S124B14	RESISTOR	470K-5-1/4
R 004	1	6S124B14	RESISTOR	470K-5-1/4
R 005	1	6S124A73	RESISTOR	10K-5-1/4
R 006	1	6S124A44	RESISTOR	620-5-1/4
R 018	1	6S124A03	RESISTOR	12-5-1/4
R 022	1	6S125A33	RESISTOR	220-5-1/2
R 023	1	6S125A33	RESISTOR	220-5-1/2
R 028	1	6S124A73	RESISTOR	10K-5-1/4
R 029	1	6S124A65	RESISTOR	4.7K-5-1/4
R 030	1	6S124A65	RESISTOR	4.7K-5-1/4
R 031	1	6S124A73	RESISTOR	10K-5-1/4
R 033	1	6S124A73	RESISTOR	10K-5-1/4
R 034	1	6S124A65	RESISTOR	4.7K-5-1/4
R 035	1	6S124A75	RESISTOR	12K-5-1/4
R 036	1	6S124A73	RESISTOR	10K-5-1/4
R 037	1	6S124A73	RESISTOR	10K-5-1/4
R 038	1	6S124B22	RESISTOR	1M-5-1/4
R 039	1	6S124A73	RESISTOR	10K-5-1/4
R 040	1	6S124A45	RESISTOR	680-5-1/4
R 044	1	6S124A65	RESISTOR	4.7K-5-1/4
R 045	1	6S124A73	RESISTOR	10K-5-1/4
R 046	1	6S124A79	RESISTOR	18K-5-1/4
R 048	1	6S124B30	RESISTOR	2.2M-5-1/4
R 049	1	6S124A73	RESISTOR	10K-5-1/4
R 050	1	6S124A65	RESISTOR	4.7K-5-1/4
R 051	1	6S124A89	RESISTOR	47K-5-1/4
R 052	1	6S124A49	RESISTOR	1K-5-1/4
R 053	1	6S124A89	RESISTOR	47K-5-1/4
R 054	1	18D83452F17	RESISTOR,VARIABLE	50K
R 055	1	6S124B11	RESISTOR	360K-5-1/4
R 056	1	6S124B11	RESISTOR	360K-5-1/4
R 057	1	6S124A90	RESISTOR	51K-5-1/4
R 058	1	18D83452F15	RESISTOR,VARIABLE	20K
R 059	1	18D83452F11	RESISTOR,VARIABLE	5K
R 060	1	6S124A73	RESISTOR	10K-5-1/4
R 061	1	6S124A97	RESISTOR	100K-5-1/4
R 062	1	6S124A83	RESISTOR	27K-5-1/4
R 063	1	6S124A81	RESISTOR	22K-5-1/4 NOMINAL
R 063	S01	6S124A83	RESISTOR	27K-5-1/4
R 064	1	6S124A73	RESISTOR	10K-5-1/4
R 065	1	6S124A89	RESISTOR	47K-5-1/4
R 070	1	6S124A65	RESISTOR	4.7K-5-1/4
R 072	1	6S124A57	RESISTOR	2.2K-5-1/4
R 080	1	6S124B46	RESISTOR	10M-5-1/4
R 081	1	6S124A35	RESISTOR	270-5-1/4
R 082	1	6S124A92	RESISTOR	62K-5-1/4
R 083	1	6S124A97	RESISTOR	100K-5-1/4
R 084	1	6S124A73	RESISTOR	10K-5-1/4
R 086	1	6S124A27	RESISTOR	120-5-1/4
R 087	1	6S124A27	RESISTOR	120-5-1/4
R 088	1	6S124A49	RESISTOR	1K-5-1/4
R 089	1	6S124A09	RESISTOR	22-5-1/4
R 090	1	6S124A89	RESISTOR	47K-5-1/4
U 002	1	51-80345A27	INTEGRATED CIRCUIT	
U 003	1	51-80345A01	INTEGRATED CIRCUIT	
U 004	1	51-80345A01	INTEGRATED CIRCUIT	
U 005	1	51-80345A24	INTEGRATED CIRCUIT	
U 006	1	51-80345A08	ITERGRATED CIRCUIT	
U 007	1	51-84621K22	INTEGRATED CIRCUIT	
VR001	1	48-82256C25	DIODE,ZENER	12V-5-.4
VR002	1	48-86850C95	DIODE,ZENER	20V-5-.5
VR004	1	48-82256C25	DIODE,ZENER	12V-5-.4
VR005	1	48-82256C45	DIODE,ZENER	9.1V-5-.4
VR006	1	48-818459	DIODE	

ASSEMBLY PARTS LIST
Low Voltage Power Supply
(Sheet 2)

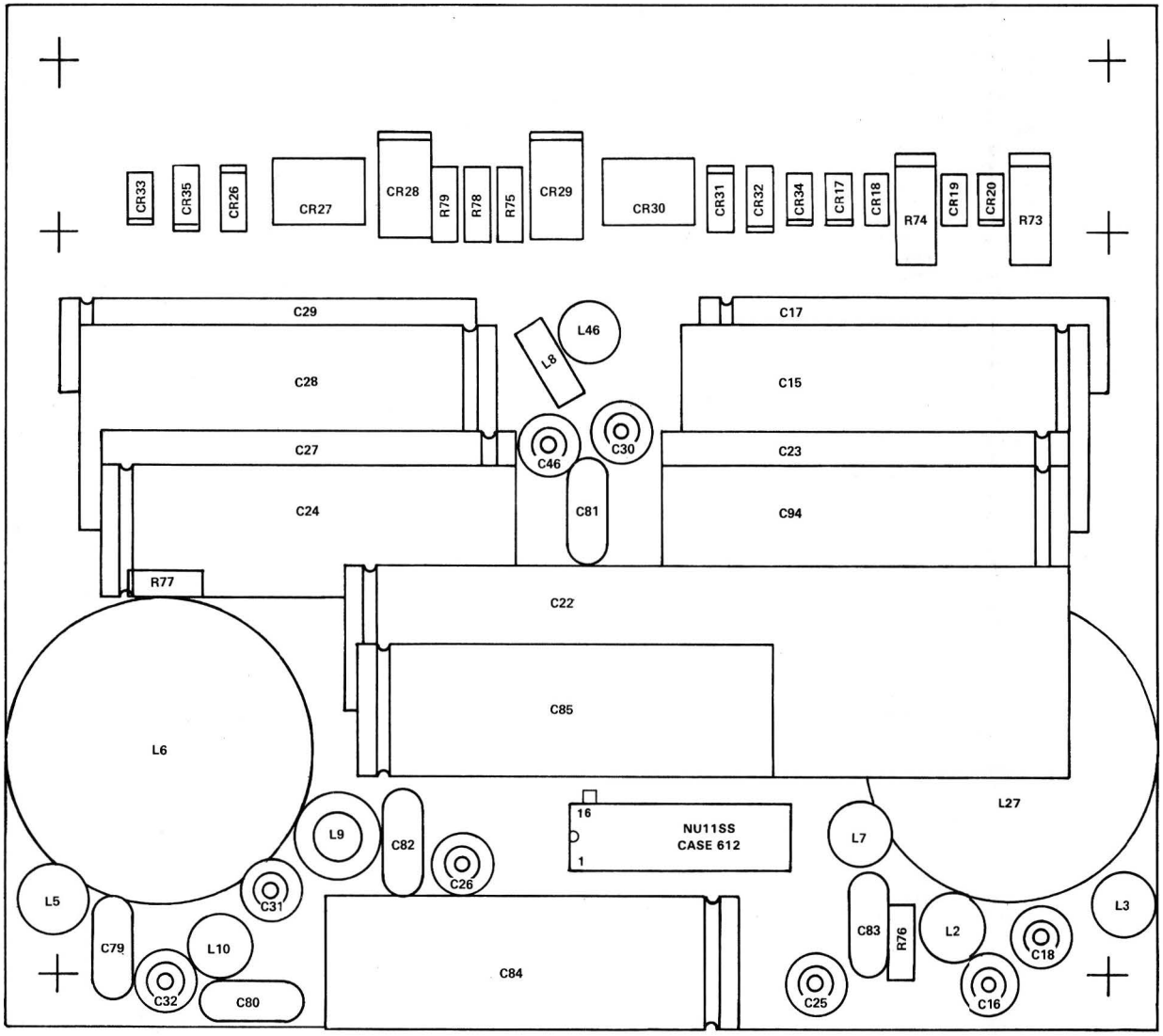

Low Voltage Power Output Assy A1A2

Output PWB A1A2
RTP-4008A

Find No.	Qty. Req.	Part Number	Nomenclature	Part Value
001	1	84-P00239N001	PWB,LVPS OUTPUT	
002	1	14-P04128T002	INSULATOR	
003	AR	SN63WRMAP3	SOLDER	
004	4	3052-B-440-B-2	SPACER	
005	AR		INSULATION TAPE	1IN YELLOW
006	2	MS35206-214	SCREW,PH	4-40X.312
007	2	MS27183-3	WASHER,FLAT	NO.4
008	2	MS35338-40	WASHER,LOCK	NO.4
009	2	MS35649-242	NUT,HEX	4-40
010	1	01-80304A55	CABLE ASSEMBLY	16PIN,DUALSIDE 3LG
011	AR	RTV3145	ADHESIVE,SILICONE	
012	AR		INSULATION SLEEVING	22 WHT
013	AR		WIRE	26 WHT
014	AR		WIRE,BUS	22
015	AR	11-14167A01	INK	BLACK
016	1	14-P04128T001	INSULATOR	
C 015	1	TVA1413	CAPACITOR	40UF-150V
C 016	1	21C82543H03	CAPACITOR,FEEDTHRU	5000PF80-20-500
C 017	1	TVA1413	CAPACITOR	40UF-150V
C 018	1	21C82543H03	CAPACITOR,FEEDTHRU	5000PF80-20-500
C 022	1	39D258G015GP4	CAPACITOR	2500UF-15V
C 023	1	500D507G025FH7	CAPACITOR	500UF-25V
C 024	1	500D507G025FH7	CAPACITOR	500UF-25V
C 025	1	21C82543H03	CAPACITOR,FEEDTHRU	5000PF80-20-500
C 026	1	21C82543H03	CAPACITOR,FEEDTHRU	5000PF80-20-500
C 027	1	500D507G025FH7	CAPACITOR	500UF-25V
C 028	1	500D507G025FH7	CAPACITOR	500UF-25V
C 029	1	500D157G050EH7	CAPACITOR	150UF-50V
C 030	1	21C82543H03	CAPACITOR,FEEDTHRU	5000PF80-20-500
C 031	1	21C82543H03	CAPACITOR,FEEDTHRU	5000PF80-20-500
C 032	1	21C82543H03	CAPACITOR,FEEDTHRU	5000PF80-20-500
C 079	1	3CZ5U105D8500C5	CAPACITOR,CERAMIC	1UF-50V
C 080	1	3CZ5U105D8500C5	CAPACITOR,CERAMIC	1UF-50V
C 081	1	3CZ5U105D8500C5	CAPACITOR,CERAMIC	1UF-50V
C 082	1	3CZ5U105D8500C5	CAPACITOR,CERAMIC	1UF-50V
C 083	1	3CZ5U105D8500C5	CAPACITOR,CERAMIC	1UF-50V
C 084	1	500D507G025FH7	CAPACITOR	500UF-25V
C 085	1	500D507G025FH7	CAPACITOR	500UF-25V
C 094	1	500D507G025FH7	CAPACITOR	500UF-25V
C 096	1	21C82543H03	CAPACITOR,FEEDTHRU	5000PF80-20-500
C 098	1	500D507G025FH7	CAPACITOR	500UF-25V
CR017	1	48-80345A70	DIODE-25V	400V-1A
CR018	1	48-80345A70	DIODE1A	400V-1A
CR019	1	48-80345A70	DIODE1A	400V-1A
CR020	1	48-80345A70	DIODE1A	400V-1A
CR026	1	48-80346A66	DIODE1A	40V-1A
CR027	1	48-80346A67	DIODEA	20V-5A
CR028	1	48-84250L01	DIODEA	30V-3A
CR029	1	48-84250L01	DIODEA	30V-3A
CR030	1	48-80346A67	DIODEA	20V-5A
CR031	1	48-80346A66	DIODEA	40V-1A
CR032	1	48-80346A66	DIODEA	40V-1A
CR033	1	48-80345A69	DIODEA	100V-1A
CR034	1	48-80345A69	DIODE1A	100V-1A
CR035	1	48-80346A66	DIODE1A	40V-1A
L 002	1	VK200-10/3B	COIL	
L 003	1	VK200-10/3B	COIL	
L 005	1	VK200-10/3B	COIL	
L 006	1	24-P00326N001	CHOKE	20UH
L 007	1	VK200-10/3B	COIL	
L 008	1	VK200-10/3B	COIL	
L 009	1	VK200-10/3B	COIL	
L 010	1	VK200-10/3B	COIL	
L 027	1	24-P00326N001	CHOKE	20UH
L 046	1	VK200-10/3B	COIL	
R 073	1	6S125A96	RESISTOR	91K-5-1/2
R 074	1	6S125A96	RESISTOR	91K-5-1/2
R 075	1	6S124A76	RESISTOR	13K-5-1/4
R 076	1	6S124A56	RESISTOR	2.0K-5-1/4
R 077	1	6S124A35	RESISTOR	270-5-1/4
R 078	1	6S124A59	RESISTOR	2.7K-5-1/4
R 079	1	6S124A61	RESISTOR	3.3K-5-1/4
T 002	1	24-P00324N001	TRANSFORMER	TRANSFORMER

Relay Assembly A1A3
01-80304A40

Find No.	Qty. Req.	Part No.	Nomenclature	Part Value
001	1	27-P00237N001	RELAY CHASSIS	
002	1	07-P00306N001	BRACKET,RELAY	
003	8	MS35206-227	SCREW	6-32X.312
004	7	MS35649-262	NUT,HEX	6-32
005	4	MS27183-5	WASHER,FLAT	NO.6
006	4	MS35338-41	WASHER,LOCK	NO.6
007	4	MS77068-2	TERMINAL,LUG	N0.6
008	4	B52595F025	TERMINAL,LUG	N0.10
009	4	B51566F020	WASHER,LOCK	NO.10
010	4	B51567F009	WASHER,FLAT	NO.10
011	4	B51568F015	NUT10	10-32
012	4	B51547F012	WASHER,TEFLON	
013	1	2104-632-A-9	SPACER,HEX	
014	4	011-1046-000-479	TERMINAL,FEEDTHRU INS	
015	5	29-15106A63	TERMINAL,FEEDTHRU-INS	
016	8	MW-688-195-002	WASHER,MICA	
017	AR		WIRE	22 WHT
018	AR		WIRE	14 WHT
019	AR		WIRE	16 WHT
020	AR	RTV3145	ADHESIVE,SILICONE	
021	AR	G-642	COMPOUND	
022	AR	SN63WRMAP3	SOLDER	
023	AR		INSULATION SLEEVING	20 WHT
024	AR		INSULATION SLEEVING	16 WHT
025	1	NAS671C6	NUT	1380-32
C 091	1	39D507G030FL4	CAPACITOR	500UF-30V
C 092	1	39D507G030FL4	CAPACITOR	500UF-30V
C 101	1	2499-003X5W502AA	CAPACITOR	5000PF-GMV-500
C 102	1	2499-003X5W502AA	CAPACITOR	5000PF-GMV-500
C 103	1	2499-003X5W502AA	CAPACITOR	5000PF-GMV-500
C 104	1	2499-003X5W502AA	CAPACITOR	5000PF-GMV-500
C 105	1	6PS-P22	CAPACITOR	.22UF-600V
C 106	1	2499-003X5W502AA	CAPACITOR	5000PF-GMV-500
CR021	1	48-80345A66	DIODEF-GMV-500	30V-15A
CR022	1	48-80345A66	DIODE5A	30V-15A
CR054	1	48-80345A66	DIODE5A	30V-15A
CR055	1	48-80345A66	DIODE5A	30V-15A
CR066	1	48-80345A67	DIODE5A	100V
CR067	1	48-80345A67	DIODE	100V
CR068	1	48-80345A67	DIODE	100V
K 001	1	80-80346A03	RELAY	12V
L 017	1	24-P00328N001	CHOKE	
L 048	1	10273	FERRITE BEAD	
L 049	1	10273	FERRITE BEAD	
L 050	1	10273	FERRITE BEAD	
L 051	1	10273	FERRITE BEAD	
V 001	1	V39ZA6	VARISTOR	VARISTOR

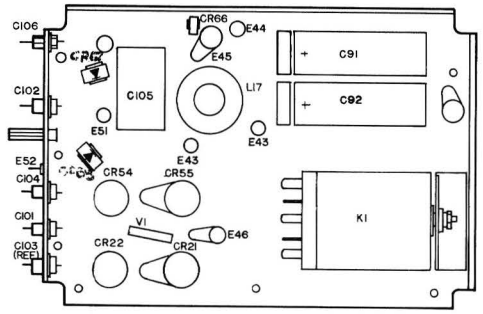

ASSEMBLY PARTS LIST

Low Voltage Power Supply
(Sheet 3)

SECTION 8

SCOPE AMPLIFIER (A2)

8-1. General. The Scope Amplifier module contains the horizontal and vertical deflection amps, the horizontal timebase generator, focus and intensity control circuitry, and miscellaneous CRT bias adjustments. A block diagram of the Scope Amplifier module is shown in figure 8-1 with its schematic shown in figure 8-2.

8-2. Deflection Amplifiers. The vertical and horizontal deflection amplifiers are identical. The input signal is initially amplified and split into two signals 180° out of phase. Each of the two signals is then further amplified to become the CRT deflection plate signals. The amplifiers provide up to 200 volts peak-peak signal capability with a 1 MHz frequency bandwidth.

8-3. Horizontal Timebase Generator. The horizontal timebase generator provides calibrated sweep rates over a six decade range from 1***11*** sec to 100 msec per division. Sweep rate selection is from the processor via the SCOPE SWP CONT 0-7 signal lines. Veriner control over the sweep rate is via the SWP VERN VOLT input from the front panel. Sweep triggering is either the auto or normal mode as selected by the AUTO/NOR TRIG SEL line from the front panel. In the auto mode if the SYNC PRESENT input is high indicating no sync, the scope sweep is self triggered after a hold off time. If there is a sync present, the sweep will wait for a pulse on the TRIG PULSE line to start the sweep after the hold off time. For the normal trigger mode the sweep will always wait for a TRIG PULSE input.

8-4. A sweep cycle consists of two parts, the sweep and the hold off. During the sweep the CRT is unblanked via the SWP BLANKING line and the horizontal trace is made. At the end of the sweep the CRT is blanked and the hold off time begins. During the hold off time, which is equal to the sweep time, the sweep generator and trigger circuits are reset in preparation for the next sweep.

8-5. Horizontal Switching. The input to the horizontal deflection amp is selected between two sources. The INT HORIZ IN signal line provides the horizontal character sweep and the horizontal spectrum analyzer sweep. The other source is the scope mode signal path from the horizontal positioning suming amp. The scope mode signal is either the output of the Horizontal Timebase Generator or the EXT HORIZ INPUT from the front panel. Selection between internal horizontal and scope mode horizontal inputs is via the SCOPE MODE EN line from the processor. Selection between the two scope mode signals is via the EXT HORIZ EN line.

8-6. Intensity Control. A crossover network is used to provide CRT Z-axis modulation from DC to 1 MHz. The INTEN LVL signal from the front panel control is gated with the SCOPE Z-AXIS signal by the Intensity Level Gate. The gated signal is sumed with the HV REF and INTEN SMPL VOLT signals to provide the INTEN TV signal. The INTEN TV (Intensity Tracking Voltage) is the low frequency control path which drives the intensity optoisolator in the High Voltage Supply.

8-7. The high frequency modulation path is via the Z-Axis Modulator circuit, line. line. The resulting CRT Z-AXIS signal is capacitively coupled to the CRT grid.

8-8. Focus Control. The FOCUS TV (Focus Tracking Voltage) signal is obtained by comparing the FOCUS LEVEL control line to the FOCUS SAMPLE VOLT signal. The tracking voltage signal drives an optoisolator circuit in the High Voltage Supply which controls the CRT focus voltage.

8-9. Astigmatism, Geometry, and Trace Rotation. These three CRT alignment controls are obtained from the respective wipers of three potentiometers. Each potentiometer is connected between supply voltages equal to the adjustment range required.

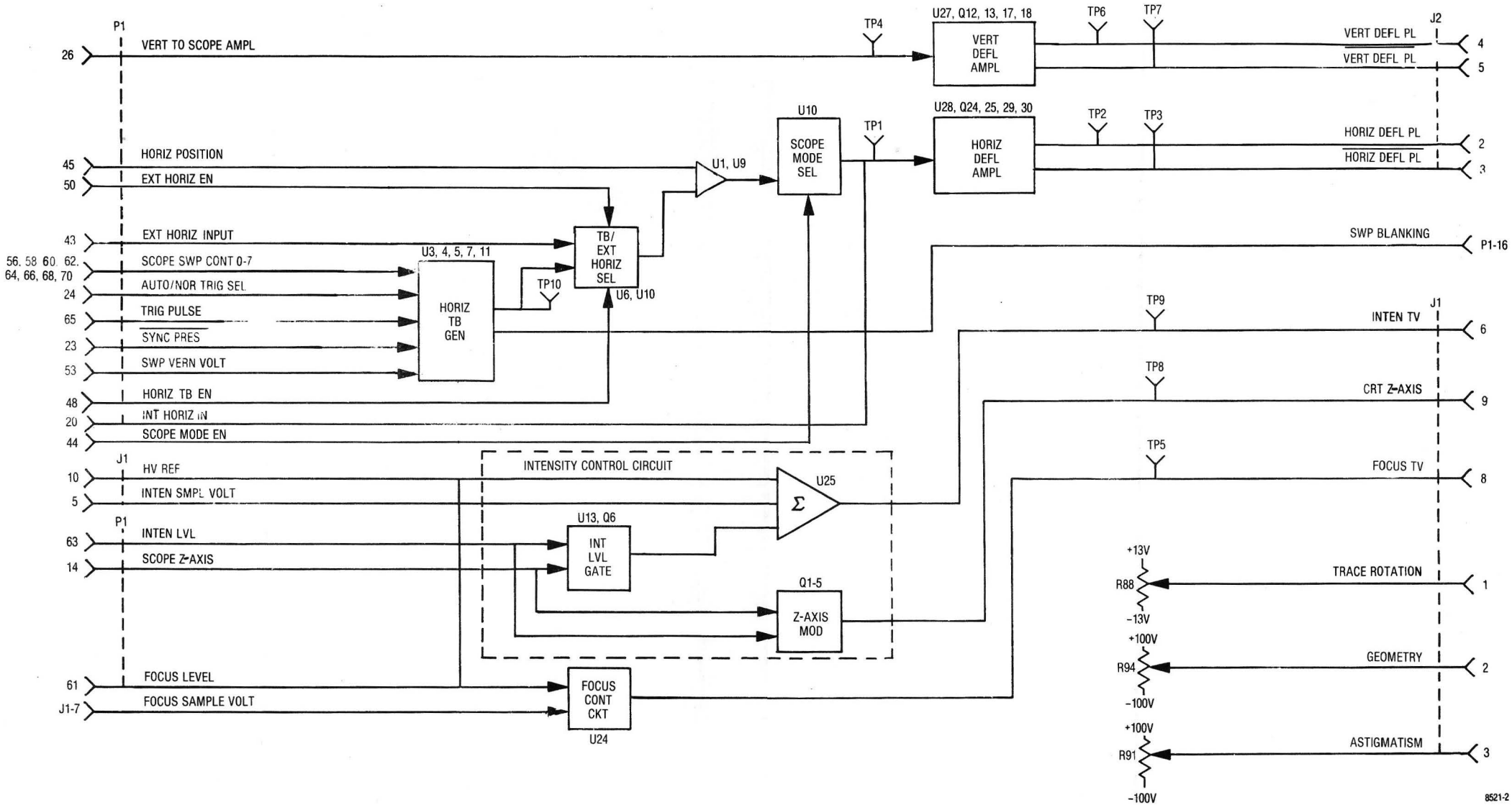

Figure 8-1. Scope Amplifier A2 Block Diagram

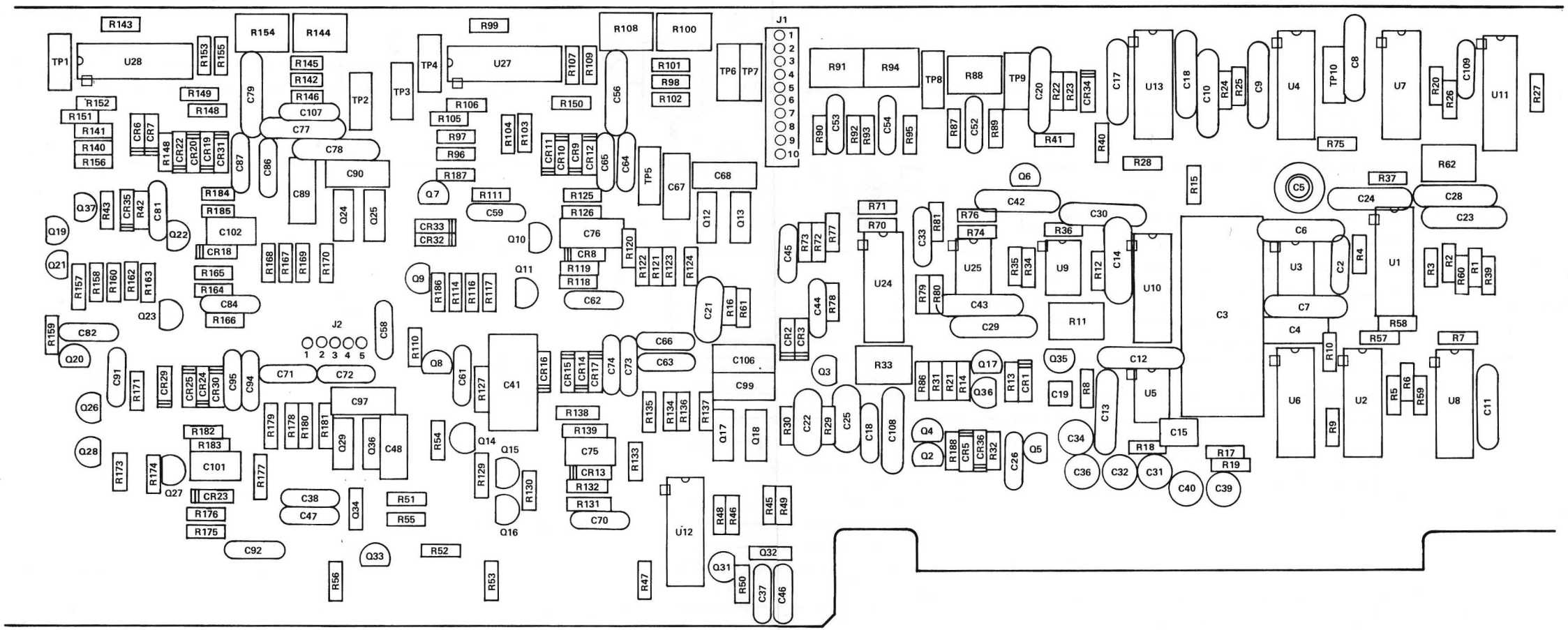

Figure 8-3. Scope Amplifier Parts Locator

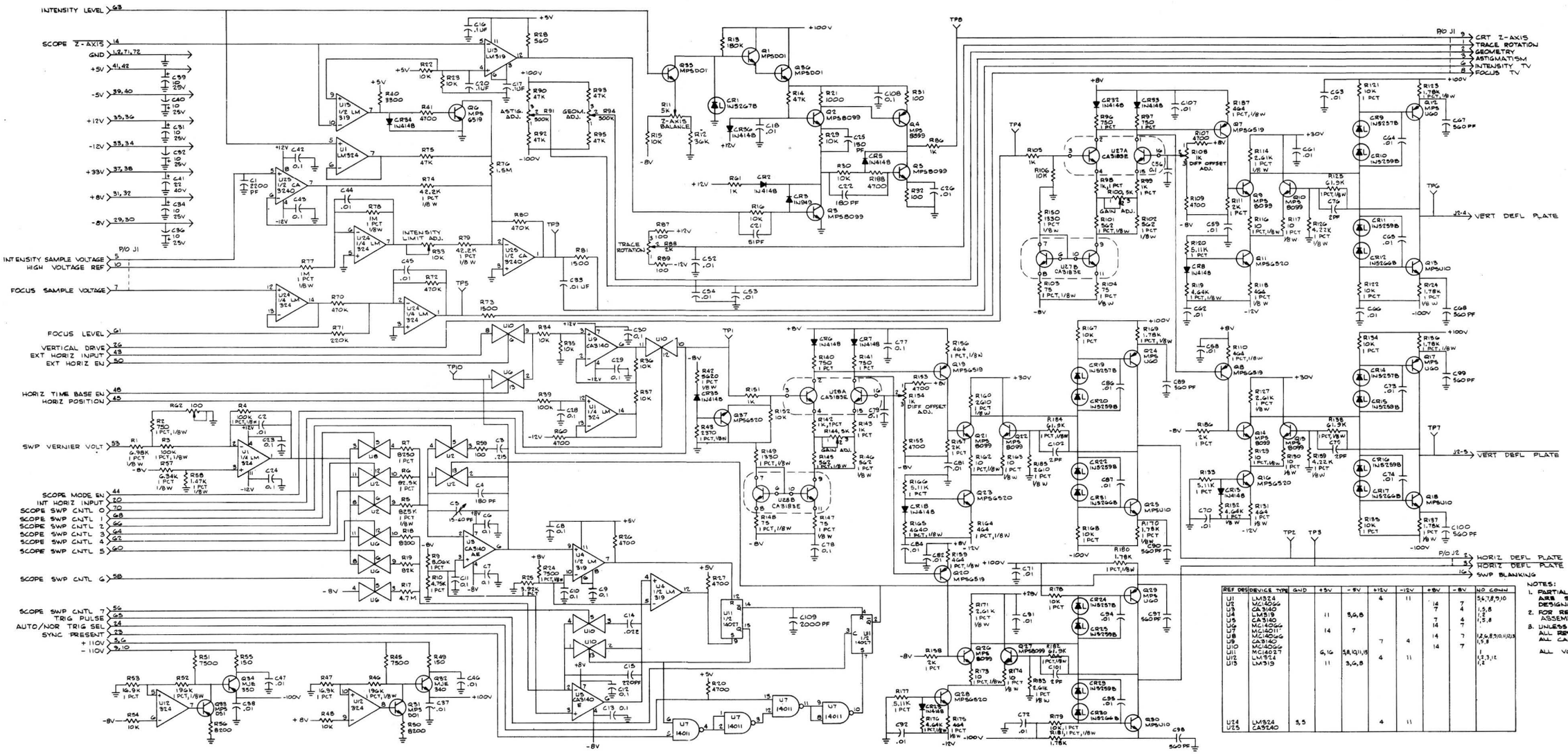

REF DES	DEVICE TYPE	GND	+5V	-8V	+12V	-12V	+8V	-8V	NO CONN
U1	LM324				4	11	14	7	5,6,7,8,9,10
U2	MC14006						7	4	1,5,8
U3	CA3140								1,2
U4	LM319		11	5,6,8			7	4	1,5,8
U5	CA3140						14	7	
U6	MC14006		14	7			14	7	
U7	MC14011				7	4			12,6,8,9,10,11,12,13
U8	MC14006						14	7	1,3,8
U9	CA3140								
U10	MC14006								1
U11	MC14027		6,16	5,8,10,11,15	4	11			1,2,3,12
U12	LM324								1,2
U13	LM319		11	5,6,8					
U24	LM324	3,5			4	11			
U25	CA3140								

NOTES:
1. PARTIAL REFERENCE DESIGNATIONS ARE SHOWN. FOR COMPLETE DESIGNATION PREFIX WITH 1A2.
2. FOR REFERENCE DRAWINGS REFER TO ASSEMBLY 01-P00413N
3. UNLESS OTHERWISE SPECIFIED: ALL RESISTORS ARE IN OHMS ±5 PCT, 1/8 WATT. ALL CAPACITORS ARE IN UF.

ALL VOLTAGES ARE IN DC.

Figure 8-2. Scope Amplifier A2 Schematic Diagram (RTL-4007A)

Scope Horz/Vert Amplifier A2
RTL-4007A

Find No.	Qty. Req.	Part No.	Nomenclature	Part Value
001	1	84-P00452N001	PWB, SCOPE AMPL	
002	AR	SN63WRMAP3	SOLDER	
003	AR	11-14167A01	INK	BLACK
004	4	26-P00316N001	HEAT SINK,TRANSISTOR	
005	4	42-P00317N001	BLOCK,TRANSISTOR MOUN	
006	8	NAS662-2-4	SCREW	2-56X1/4
007	4	MS35206-215	SCREW	4-40X.375
008	4	MS35338-40	WASHER,LOCK	NO.4
009	4	MS35649-242	NUT,HEX	4-40
010	4	33-14232A10	IDENTIFICATION PLATE	
011	AR		WIRE	26
012	10	M39024/11-01	JACK,TIP	WHITE
C 001	1	08C82789H01	CAPACITOR	2200PF-10-250
C 002	1	21D82428B62	CAPACITOR	.01UF80-20-200
C 003	1	08-83445B68	CAPACITOR	.215UF-1
C 004	1	21D84494B46	CAPACITOR	180PF-3-500
C 005	1	20C82399D07	CAPACITOR,VARIABLE	15-60PF
C 006	1	21C82372C09	CAPACITOR	.1UF80-20-25
C 007	1	21C82372C09	CAPACITOR	.1UF80-20-25
C 008	1	21C82372C09	CAPACITOR	.1UF80-20-25
C 009	1	21C82372C09	CAPACITOR	.1UF80-20-25
C 010	1	21C82372C09	CAPACITOR	.1UF80-20-25
C 011	1	21C82372C09	CAPACITOR	.1UF80-20-25
C 012	1	21C82372C09	CAPACITOR	.1UF80-20-25
C 013	1	21C82372C09	CAPACITOR	.1UF80-20-25
C 014	1	08D82096J08	CAPACITOR	.022UF-10-250
C 015	1	21D82187B08	CAPACITOR	220PF-10-500
C 016	1	21C82372C09	CAPACITOR	.1UF80-20-25
C 017	1	21C82372C09	CAPACITOR	.1UF80-20-25
C 018	1	21D82428B62	CAPACITOR	.01UF80-20-200
C 020	1	21C82372C09	CAPACITOR	.1UF80-20-25
C 021	1	21D84494B01	CAPACITOR	51PF-5-500
C 022	1	21D84494B46	CAPACITOR	180PF-3-500
C 023	1	21C82372C09	CAPACITOR	.1UF80-20-25
C 024	1	21C82372C09	CAPACITOR	.1UF80-20-25
C 025	1	21D84494B07	CAPACITOR	150PF-5-500
C 026	1	21D82428B62	CAPACITOR	.01UF80-20-200
C 028	1	21C82372C09	CAPACITOR	.1UF80-20-25
C 029	1	21C82372C09	CAPACITOR	.1UF80-20-25
C 030	1	21C82372C09	CAPACITOR	.1UF80-20-25
C 031	1	23D84665F01	CAPACITOR	10UF-25V
C 032	1	23D84665F01	CAPACITOR	10UF-25V
C 033	1	21D82428B62	CAPACITOR	.01UF80-20-200
C 034	1	23D84665F01	CAPACITOR	10UF-25V
C 036	1	23D84665F01	CAPACITOR	10UF-25V
C 037	1	21D82428B62	CAPACITOR	.01UF80-20-200
C 038	1	21D82428B62	CAPACITOR	.01UF80-20-200
C 039	1	23D84665F01	CAPACITOR	10UF-25V
C 040	1	23D84665F01	CAPACITOR	10UF-25V
C 041	1	23D82256J08	CAPACITOR	22UF-40V
C 042	1	21C82372C09	CAPACITOR	.1UF80-20-25
C 043	1	21C82372C09	CAPACITOR	.1UF80-20-25
C 044	1	21D82428B62	CAPACITOR	.01UF80-20-200
C 045	1	21D82428B62	CAPACITOR	.01UF80-20-200
C 046	1	21D82428B62	CAPACITOR	.01UF80-20-200
C 047	1	21D82428B62	CAPACITOR	.01UF80-20-200
C 052	1	21D82428B62	CAPACITOR	.01UF80-20-200
C 053	1	21D82428B62	CAPACITOR	.01UF80-20-200
C 054	1	21D82428B62	CAPACITOR	.01UF80-20-200
C 056	1	21C82372C09	CAPACITOR	.1UF80-20-25
C 058	1	21D82428B62	CAPACITOR	.01UF80-20-200
C 059	1	21D82428B62	CAPACITOR	.01UF80-20-200

Find No.	Qty. Req.	Part No.	Nomenclature	Part Value
C 061	1	21D82428B62	CAPACITOR	.01UF80-20-200
C 062	1	21D82428B62	CAPACITOR	.01UF80-20-200
C 063	1	21D82428B62	CAPACITOR	.01UF80-20-200
C 064	1	21D82428B62	CAPACITOR	.01UF80-20-200
C 065	1	21D82428B62	CAPACITOR	.01UF80-20-200
C 066	1	21D82428B62	CAPACITOR	.01UF80-20-200
C 067	1	21D82187B06	CAPACITOR	560PF-10-500
C 068	1	21D82187B06	CAPACITOR	560PF-10-500
C 070	1	21D82428B62	CAPACITOR	.01UF80-20-200
C 071	1	21D82428B62	CAPACITOR	.01UF80-20-200
C 072	1	21D82428B62	CAPACITOR	.01UF80-20-200
C 073	1	21D82428B62	CAPACITOR	.01UF80-20-200
C 074	1	21D82428B62	CAPACITOR	.01UF80-20-200
C 075	1	21-14032G97	CAPACITOR	2PF-.5PF-500
C 076	1	21-14032G97	CAPACITOR	2PF-.5PF-500
C 077	1	21C82372C09	CAPACITOR	.1UF80-20-25
C 078	1	21C82372C09	CAPACITOR	.1UF80-20-25
C 079	1	21C82372C09	CAPACITOR	.1UF80-20-25
C 081	1	21D82428B62	CAPACITOR	.01UF80-20-200
C 082	1	21D82428B62	CAPACITOR	.01UF80-20-200
C 084	1	21D82428B62	CAPACITOR	.01UF80-20-200
C 086	1	21D82428B62	CAPACITOR	.01UF80-20-200
C 087	1	21D82428B62	CAPACITOR	.01UF80-20-200
C 089	1	21D82187B06	CAPACITOR	560PF-10-500
C 090	1	21D82187B06	CAPACITOR	560PF-10-500
C 091	1	21D82428B62	CAPACITOR	.01UF80-20-200
C 092	1	21D82428B62	CAPACITOR	.01UF80-20-200
C 094	1	21D82428B62	CAPACITOR	.01UF80-20-200
C 095	1	21D82428B62	CAPACITOR	.01UF80-20-200
C 097	1	21D82187B06	CAPACITOR	560PF-10-500
C 098	1	21D82187B06	CAPACITOR	560PF-10-500
C 099	1	21D82187B06	CAPACITOR	560PF-10-500
C 100	1	21D82187B06	CAPACITOR	560PF-10-500
C 101	1	21-14032G97	CAPACITOR	2PF-.5PF-500
C 102	1	21-14032G97	CAPACITOR	2PF-.5PF-500
C 107	1	21D82428B62	CAPACITOR	.01UF80-20-200
C 108	1	M39014/02-1350	CAPACITOR	.1UF-10-100
C 109	1	21D82428B36	CAPACITOR	2000PF-10-200
CR001	1	48-80345A85	DIODE,ZENER	75V-5-.5
CR002	1	48-84463K02	DIODE	
CR003	1	48-80345A95	DIODE	
CR005	1	48-84463K02	DIODE	
CR006	1	48-84463K02	DIODE	
CR007	1	48-84463K02	DIODE	
CR008	1	48-84463K02	DIODE	
CR009	1	48-80345A82	DIODE,ZENER	33V-5-.5
CR010	1	48-80345A83	DIODE,ZENER	39V-5-.5
CR011	1	48-80345A83	DIODE,ZENER	59V-5-.5
CR012	1	48-80345A84	DIODE, ZENER	68V-5-.5
CR013	1	48-84463K02	DIODE	
CR014	1	48-80345A82	DIODE,ZENER	33V-5-.5
CR015	1	48-80345A83	DIODE,ZENER	39V-5-.5
CR016	1	48-80345A83	DIODE,ZENER	39V-5-.5
CR017	1	48-80345A84	DIODE, ZENER	68V-5-.5
CR018	1	48-84463K02	DIODE	
CR019	1	48-80345A82	DIODE,ZENER	33V-5-.5
CR020	1	48-80345A83	DIODE,ZENER	39V050.5
CR022	1	48-80345A83	DIODE,ZENER	39V-5-.5
CR023	1	48-84463K02	DIODE	
CR024	1	48-80345A82	DIODE,ZENER	33V-5-.5
CR025	1	48-80345A83	DIODE,ZENER	39V-5-.5
CR029	1	48-80345A83	DIODE,ZENER	39V-5-.5
CR030	1	48-80345A84	DIODE, ZENER	68V-5-.5

Find No.	Qty. Req.	Part No.	Nomenclature	Part Value
CR031	1	48-80345A84	DIODE, ZENER	68V-5-.5
CR032	1	48-84463K02	DIODE	
CR033	1	48-84463K02	DIODE	
CR034	1	48-84463K02	DIODE	
CR035	1	48-84463K02	DIODE	
CR036	1	48-84463K02	DIODE	
J 001	1	1-640456-0	CONNECTOR	
J 002	1	640456-5	CONNECTOR	
Q 001	1	48-80345A49	TRANSISTOR	
Q 002	1	48-80345A51	TRANSISTOR	
Q 003	1	48-80345A51	TRANSISTOR	
Q 004	1	48-80345A52	TRANSISTOR	
Q 005	1	48-80345A51	TRANSISTOR	
Q 006	1	48R00869571	TRANSISTOR	
Q 007	1	48R00869571	TRANSISTOR	
Q 008	1	48R00869571	TRANSISTOR	
Q 009	1	48-80345A51	TRANSISTOR	
Q 010	1	48-80345A51	TRANSISTOR	
Q 011	1	48R00869570	TRANSISTOR	
Q 012	1	48-80341A48	TRANSISTOR	
Q 013	1	48-80341A47	TRANSISTOR	
Q 014	1	48-80345A51	TRANSISTOR	
Q 015	1	48-80345A51	TRANSISTOR	
Q 016	1	48R00869570	TRANSISTOR	
Q 017	1	48-80341A48	TRANSISTOR	
Q 018	1	48-80341A47	TRANSISTOR	
Q 019	1	48R00869571	TRANSISTOR	
Q 020	1	48R00869571	TRANSISTOR	
Q 021	1	48-80345A51	TRANSISTOR	
Q 022	1	48-80345A51	TRANSISTOR	
Q 023	1	48R00869570	TRANSISTOR	
Q 024	1	48-80341A48	TRANSISTOR	
Q 025	1	48-80341A47	TRANSISTOR	
Q 026	1	48-80345A51	TRANSISTOR	
Q 027	1	48-80345A51	TRANSISTOR	
Q 028	1	48R00869570	TRANSISTOR	
Q 029	1	48-80341A48	TRANSISTOR	
Q 030	1	48-80341A47	TRANSISTOR	
Q 031	1	48-80345A49	TRANSISTOR	
Q 032	1	48-80345A44	TRANSISTOR	
Q 033	1	48-80341A46	TRANSISTOR	
Q 034	1	48-80345A45	TRANSISTOR	
Q 035	1	48-80345A49	TRANSISTOR	
Q 036	1	48-80345A49	TRANSISTOR	
Q 037	1	48R00869570	TRANSISTOR	
R 001	1	06D83175C88	RESISTOR	6.98K-1-1/4
R 002	1	06-10621B82	RESISTOR	750-1-1/8
R 003	1	06-10621D88	RESISTOR	100K-1-1/8
R 004	1	06-10621D88	RESISTOR	100K-1-1/8
R 005	1	06-10621E77	RESISTOR	825K-1-1/8
R 006	1	06D83175C74	RESISTOR	82.5K-1-1/4
R 007	1	06D82185J25	RESISTOR	8.25K-1-1/4
R 009	1	06D83175C90	RESISTOR	8.06K-1-1/4
R 010	1	06D83175C97	RESISTOR	4.75K-1-1/4
R 011	1	18D83452F11	RESISTOR VARIABLE	5K
R 012	1	6S124A86	RESISTOR	36K-5-1/4
R 013	1	6S124B04	RESISTOR	180K-5-1/4
R 014	1	6S124A89	RESISTOR	47K-5-1/4
R 015	1	6S124A73	RESISTOR	10K-5-1/4
R 016	1	6S124A73	RESISTOR	10K-5-1/4
R 017	1	6S124B38	RESISTOR	4.7M-5-1/4
R 018	1	6S124A71	RESISTOR	8.2K-5-1/4
R 019	1	6S124A95	RESISTOR	82K-5-1/4
R 020	1	6S124A65	RESISTOR	4.7K-5-1/4

ASSEMBLY PARTS LIST
Scope Amplifier Parts
~~(Sheet 1)~~

Find No.	Qty. Req.	Part No.	Nomenclature	Part Value
R 021	1	6S124A49	RESISTOR	1K-5-1/4
R 022	1	6S124A73	RESISTOR	10K-5-1/4
R 023	1	6S124A73	RESISTOR	10K-5-1/4
R 024	1	06-10621C79	RESISTOR	7.5K-1-1/8
R 025	1	06D82185J33	RESISTOR	3.92K-1-1/4
R 026	1	6S124A65	RESISTOR	4.7K-5-1/4
R 027	1	6S124A65	RESISTOR	4.7K-5-1/4
R 028	1	6S124A43	RESISTOR	560-5-1/4
R 029	1	6S124A73	RESISTOR	10K-5-1/4
R 030	1	6S124A73	RESISTOR	10K-5-1/4
R 031	1	6S124A25	RESISTOR	100-5-1/4
R 032	1	6S124A25	RESISTOR	100-5-1/4
R 033	1	18D83452F13	RESISTOR,VARIABLE	10K
R 034	1	6S124A73	RESISTOR	10K-5-1/4
R 035	1	6S124A73	RESISTOR	10K-5-1/4
R 036	1	6S124A73	RESISTOR	10K-5-1/4
R 037	1	6S124A73	RESISTOR	10K-5-1/4
R 039	1	6S124A97	RESISTOR	100K-5-1/4
R 040	1	6S124A61	RESISTOR	3.3K-5-1/4
R 041	1	6S124A65	RESISTOR	4.7K-5-1/4
R 042	1	06-10621C67	RESISTOR	5620-1-1/8
R 043	1	06-10621C31	RESISTOR	2370-1-1/8
R 045	1	6S124A70	RESISTOR	7.5K-5-1/4
R 046	1	06-10621E17	RESISTOR	196K-1-1/8
R 047	1	06D83175C21	RESISTOR	16.9K-1-1/4
R 048	1	6S124A73	RESISTOR	10K-5-1/4
R 049	1	6S124A29	RESISTOR	150-5-1/4
R 050	1	6S124A71	RESISTOR	8.2K-5-1/4
R 051	1	6S124A70	RESISTOR	7.5K-5-1/4
R 052	1	06-10621E17	RESISTOR	196K-1-1/8
R 053	1	06D83175C21	RESISTOR	16.9K-1-1/4
R 054	1	6S124A73	RESISTOR	10K-5-1/4
R 055	1	6S124A29	RESISTOR	150-5-1/4
R 056	1	6S124A71	RESISTOR	8.2K-5-1/4
R 057	1	06-10621C72	RESISTOR	6340-1-1/8
R 058	1	06-10621C11	RESISTOR	1.47K-1-1/8
R 059	1	6S124A25	RESISTOR	100-5-1/4
R 060	1	6S124A65	RESISTOR	4.7K-5-1/4
R 061	1	6S124A49	RESISTOR	1K-5-1/4
R 062	1	18D83452F03	RESISTOR,VARIABLE	100
R 070	1	6S124B14	RESISTOR	470K-5-1/4
R 071	1	6S124B06	RESISTOR	220K-5-1/4
R 072	1	6S124B14	RESISTOR	470K-5-1/4
R 074	1	06-10621D52	RESISTOR	42.2K-1-1/8
R 075	1	6S124A89	RESISTOR	47K-5-1/4
R 076	1	6S124B26	RESISTOR	1.5M-5-1/4
R 077	1	06-10621E85	RESISTOR	1M-1-1/8
R 078	1	06-10621E85	RESISTOR	1M-1-1/8
R 079	1	06-10621D52	RESISTOR	42.2K-1-1/8
R 080	1	6S124B14	RESISTOR	470K-5-1/4
R 081	1	6S124A53	RESISTOR	1.5K-5-1/4
R 086	1	6S124A49	RESISTOR	1K-5-1/4
R 087	1	6S124A25	RESISTOR	100-5-1/4
R 088	1	18D83452F01	RESISTOR,VARIABLE	2K
R 089	1	6S124A25	RESISTOR	100-5-1/4
R 090	1	6S124A89	RESISTOR	47K-5-1/4

Find No.	Qty. Req.	Part No.	Nomenclature	Part Value
R 091	1	18D83452F23	RESISTOR,VARIABLE	500K
R 092	1	6S124A89	RESISTOR	47K-5-1/4
R 093	1	6S124A89	RESISTOR	47K-5-1/4
R 094	1	18D83452F23	RESISTOR,VARIABLE	500K
R 095	1	6S124A89	RESISTOR	47K-5-1/4
R 096	1	06D84444A18	RESISTOR	750-1-1/4
R 097	1	06D84444A18	RESISTOR	750-1-1/4
R 098	1	06D84444A64	RESISTOR	1K-1-1/4
R 099	1	06D84444A64	RESISTOR	1K-1-1/4
R 100	1	18D83452F11	RESISTOR,VARIABLE	5K
R 101	1	06-10621B70	RESISTOR	562-1-1/8
R 102	1	06-10621B70	RESISTOR	562-1-1/8
R 103	1	06-10621A85	RESISTOR	75-1-1/8
R 104	1	06-10621A85	RESISTOR	75-1-1/8
R 105	1	6S124A49	RESISTOR	1K-5-1/4
R 106	1	6S124A73	RESISTOR	10K-5-1/4
R 107	1	6S124A65	RESISTOR	4.7K-5-1/4
R 108	1	18D83452F09	RESISTOR,VARIABLE	1K
R 109	1	6S124A65	RESISTOR	4.7K-5-1/4
R 110	1	06-10621B62	RESISTOR	464-1-1/8
R 111	1	06D82672B62	RESISTOR	2K-1-1/4
R 114	1	06-10621C35	RESISTOR	2610-1-1/8
R 116	1	06-10621A01	RESISTOR	10-1-1/8
R 117	1	06-10621A01	RESISTOR	10-1-1/8
R 118	1	06-10621B62	RESISTOR	464-1-1/8
R 119	1	06-10621C59	RESISTOR	4640-1-1/8
R 120	1	06-10621C63	RESISTOR	5.11K-1-1/8
R 121	1	06D83175C03	RESISTOR	10K-1-1/4
R 122	1	06D83175C03	RESISTOR	10K-1-1/4
R 123	1	06-10621C19	RESISTOR	1780-1-1/8
R 124	1	06-10621C19	RESISTOR	1780-1-1/8
R 125	1	06-10621D68	RESISTOR	61.9K-1-1/8
R 126	1	06-10621C55	RESISTOR	4.22K-1-1/8
R 127	1	06-10621C35	RESISTOR	2610-1-1/8
R 129	1	06-10621A01	RESISTOR	10-1-1/8
R 130	1	06-10621A01	RESISTOR	10-1-1/8
R 131	1	06-10621B62	RESISTOR	464-1-1/8
R 132	1	06-10621C59	RESISTOR	4640-1-1/8
R 133	1	06-10621C63	RESISTOR	5.11K-1-1/8
R 134	1	06D83175C03	RESISTOR	10K-1-1/4
R 135	1	06D83175C03	RESISTOR	10K-1-1/4
R 136	1	06-10621C19	RESISTOR	1780-1-1/8
R 137	1	06-10621C19	RESISTOR	1780-1-1/8
R 138	1	06-10621D68	RESISTOR	61.9K-1-1/8
R 139	1	06-10621C55	RESISTOR	4.22K-1-1/8
R 140	1	06D84444A18	RESISTOR	750-1-1/4
R 141	1	06D84444A18	RESISTOR	750-1-1/4
R 142	1	06D84444A64	RESISTOR	1K-1-1/4
R 143	1	06D84444A64	RESISTOR	1K-1-1/4
R 144	1	18D83452F11	RESISTOR,VARIABLE	5K
R 145	1	06-10621B70	RESISTOR	562-1-1/8
R 146	1	06-10621B70	RESISTOR	562-1-1/8
R 147	1	06-10621A85	RESISTOR	75-1-1/8
R 148	1	06-10621A85	RESISTOR	75-1-1/8
R 149	1	06-10621C07	RESISTOR	1330-1-1/8
R 150	1	06-10621C07	RESISTOR	1330-1-1/8

Find No.	Qty. Req.	Part No.	Nomenclature	Part Value
R 151	1	6S124A49	RESISTOR	1K-5-1/4
R 152	1	6S124A73	RESISTOR	10K-5-1/4
R 153	1	6S124A65	RESISTOR	4.7K-5-1/4
R 154	1	18D83452F09	RESISTOR,VARIABLE	1K
R 155	1	6S124A65	RESISTOR	4.7K-5-1/4
R 156	1	06-10621B62	RESISTOR	464-1-1/8
R 157	1	06D82672B62	RESISTOR	2K-1-1/4
R 158	1	06D82672B62	RESISTOR	2K-1-1/4
R 159	1	06-10621B62	RESISTOR	464-1-1/8
R 160	1	06-10621C35	RESISTOR	2610-1-1/8
R 162	1	06-10621A01	RESISTOR	10-1-1/8
R 163	1	06-10621A01	RESISTOR	10-1-1/8
R 164	1	06-10621B62	RESISTOR	464-1-1/8
R 165	1	06-10621C59	RESISTOR	4640-1-1/8
R 166	1	06-10621C63	RESISTOR	5.11K-1-1/8
R 167	1	06D83175C03	RESISTOR	10K-1-1/4
R 168	1	06D83175C03	RESISTOR	10K-1-1/4
R 169	1	06-10621C19	RESISTOR	1780-1-1/8
R 170	1	06-10621C19	RESISTOR	1780-1-1/8
R 171	1	06-10621C35	RESISTOR	2610-1-1/8
R 173	1	06-10621A01	RESISTOR	10-1-1/8
R 174	1	06-10621A01	RESISTOR	10-1-1/8
R 175	1	06-10621B62	RESISTOR	464-1-1/8
R 176	1	06-10621C59	RESISTOR	4640-1-1/8
R 177	1	06-10621C63	RESISTOR	5.11K-1-1/8
R 178	1	06D83175C03	RESISTOR	10K-1-1/4
R 179	1	06D83175C03	RESISTOR	10K-1-1/4
R 180	1	06-10621C19	RESISTOR	1780-1-1/8
R 181	1	06-10621C19	RESISTOR	1780-1-1/8
R 182	1	06-10621D68	RESISTOR	61.9K-1-1/8
R 183	1	06-10621C35	RESISTOR	2610-1-1/8
R 184	1	06-10621D68	RESISTOR	61.9K-1-1/8
R 185	1	06-10621C35	RESISTOR	2610-1-1/8
R 186	1	06D82672B62	RESISTOR	2K-1-1/4
R 187	1	06-10621B62	RESISTOR	464-1-1/8
R 188	1	6S124A65	RESISTOR	4.7K-5-1/4
U 001	1	51R84320A80	INTEGRATED CIRCUIT	
U 002	1	51-84887K73	INTEGRATED CIRCUIT	
U 003	1	51-80345A01	INTEGRATED CIRCUIT	
U 004	1	51-80345A06	INTEGRATED CIRCUIT	
U 005	1	51-80345A01	INTEGRATED CIRCUIT	
U 006	1	51-84887K73	INTEGRATED CIRCUIT	
U 007	1	51-84928F02	INTEGRATED CIRCUIT	
U 008	1	51-84887K73	INTEGRATED CIRCUIT	
U 009	1	51-80345A01	INTEGRATED CIRCUIT	
U 010	1	51-84887K73	INTEGRATED CIRCUIT	
U 011	1	51-84887K21	INTEGRATED CIRCUIT	
U 012	1	51R84320A80	INTEGRATED CIRCUIT	
U 013	1	51-80345A06	INTEGRATED CIRCUIT	
U 024	1	51R84320A80	INTEGRATED CIRCUIT	
U 025	1	51-80345A04	INTEGRATED CIRCUIT	
U 027	1	51-80345A03	INTEGRATED CIRCUIT	
U 028	1	51-80345A03	INTEGRATED CIRCUIT	

ASSEMBLY PARTS LIST

Scope Amplifier

(Sheet 2)

SECTION 9

SCOPE/DVM CONTROL MODULE (A3)

9-1. General. A primary function of the Scope/DVM Control Module is to route the required measurement and viewing signals to the DVM and scope circuitry. A large portion of the displayed data is determined by the DVM measurements on internal signal points. Thus for a rapid update of several data displays it is necessary to time division multiplex several measurement points to the DVM. The DVM control circuitry and the system processor provide this function.

9-2. The scope control circuitry allows the system to display data information, internal modulation or demodulated signals, and external scope inputs as selected by the user. Provisions are also made for external horizontal inputs and a horizontal sweep that is coherent with the sweep generator for spectrum analyzerand filter alignment displays.

9-3. The control module also contains circuitry forsingle sideband demodulation and a IF phase locked loop for filtering and waveshaping the IF signal for frequency counting. A block diagram of the Scope/DVM Control module is shown in figure 9-1 with a schematic shown in figure 9-2.

9-4. Scope Vertical Control. The input to the scope vertical amplifier is switched between four different sources; the range switch (VERT FROM RNG SW), the vertical character sweep, the spectrum analyzer (SPECT ANA VERT), or the 455 kHz IF. Range switch inputs are from either the scope vertical input jack on the front panel or the internal modulation signals as selected by the modulation display control on this module. The vertical character sweep is a sawtooth waveform generated by the Vertical Character Sweep Generator and synced by the VERT CHAR SYNC signal from the character generator. The detected and amplified output of the receiver logarithimic IF is the vertical input for the spectrum analyzer. The remaining signal source is the second IF signal from the receiver for IF envelope observation.

9-5. For the spectrum analyzer and the scope sweep displays the Dual Display Control and Character Sweep Counter circuitry allow a single row of characters at the top of the CRT. This function is implemented with the Vertical Sweep Control by alternating the spectrum analyzer or the range switch signal with the vertical character sweep signal.

9-6. The dual display sequence of events starts with the Synthesizer Sweep Generator which is common to both display modes. When the synthesizer sweep is near its peak (scope horizontal sweep is at the edge of the screen) the Dual Display Control activates the CHAR GEN RST line and switches the scope vertical and horizontal inputs to their character generator sweeps. When the first character line has been traced,, a transition on the LINE 1 input from the character generator resets the character generator sweeps and the character generator, increments the Character Sweep Counter, and thus causes line! to be traced again. This process repeats until four traces.as counted by the Character Sweep Counter, have been completed. At that point the counter resets the scope inputs back to the spectrum analyzer or range switch input. During the character display time the synthesizer sweep generator is reset and held until a transition on the SYNTH SWP SYNC line restarts the sweep. The timing of the process allows for the four character traces to be completed before the sweep sync occurs.

9-7. SSB Detection. Single Sideband (SSB) modulation is recovered by multiplying the 455 KHz IF signal with a 455 KHz beat frequency oscillator (BFO) signal. The BFO is controlled directly from the front panel and is adjustable over a 6 KHz frequency range. SSB AUDIO from the multiplier is routed to the receiver for post

detection filtering. A sample of the BFO signal is made available to the frequency counter on the IF/BFO FREQ line for sideband frequency error determination.

9-8. 455 KHz PLL. For monitor frequency error determination a 455 KHz Phase Locked Loop (PLL) is used to filter and to shape the IF signal. The cleaned up signal is switdhed with the BFO signal to the frequency counter.

9-9. Scope Horizontal Control. Switching for the scope horizontal input is divided between two modules. The time base generator and the external horizontal input are selected on the scope amplifier module. The. Horizontal Character Sweep Generator and the Synthesizer Sweep Generator signals are selected on the Control Module to the INT SCOPE HORIZ signal line.

9-10. For the dual display modes (characters and synthesizer sweep) the Horizontal Switch Control switches the horizontal input between the synthesizer sweep and the character sweep. This switching occurs simultaneously with that occurring in the scope vertical control as described in paragraph 9-6. The Horizontal Switch Control also provides the SCOPE MODE EN line to the scope avplifier to enable the scope mode horizontal inputs.

9-11. Synthesizer Sweep Control. The sweep signal generated by the Synthesizer Sweep Generator is controlled in amplitude and in range across the front panel sweep width control. Attenuations of 1.0 or 0.1 are provided by the Sweep Width Select circuitry to the sweep signal at the DISPERSION SWP signal line to the top of the width control. The bottom side of the width control is returned to the Sweep Width Select circuitry via the DISPERSION SWP RTN line. A 10 to 1 resistor change is made in the return line simultaneously with the attenuator change to give sweep ranges of 1-10 MHz and 0.01-1 MHz.

9-12. Scope Z-Axis Control. The SCOPE Z-AXIS signal has three possible sources as selected by the Z-Axis Control circuit. For character displays the Z-Axis signal is the CHAR GEN Z-AXIS from the character generator. The SWP BLANKING signal from the horizontal timebase generator is switched to the scope Z-Axis for the scope modes. For the remaining modes, spectrum analyzer and scope sweep, a logic zero level is gated to the Z-Axis input.

9-13. Modulation Display Control. Internal modulation or demodulated signals are displayed on the scope by switching the desired signal source to the input ranging switch and then switching the ranging switch output to the scope vertical input. One of two modulation sources or a demodulation output can be switched to the INT SCOPE TO RNG SW signal line for display on the CRT. Each of the signals are gain adjusted prior to the selection switch for scope calibration.

9-14. The DEMOD CAL AUDIO signal from the receiver is either AM, FM, or SSB as determined by the operating mode. The peak signal level on this line is calibrated to 10kHz/voltforFMand 10%/voltforAM.SSB signals are not calibrated.

9-15. For AM the CARRIER + MOD LVL input from the generator output detector provides a direct display of the modulation. This input is a DC level representative of the average output level plus an AC signal representative of the amplitude modulation on the output. For the scope modulation display the DC level is blocked so that only the AC component is observed. This input is uncalibrated for absolute AC levels, but the processor by determining the peak AC and average DC levels can determine the modulation depth.

9-16. For FM the MOD CAL AUDIO input from the audio synthesizer is calibrated to 5 kHz/volt for narrow band and to 20 kHz/volt for wide band. Correspondingly the display calibrating attenuator has two gain ranges to maintain the same display calibration for both narrow and wide band.

9-17. **Peak Detector.** Each of the modulation and demodulation inputs can be selected to the peak detecting circuitry for the determination of % AM or kHz deviation. The peak detector circuitry provides DC outputs equal to the negative and positive peak values of the input signal relative to the average DC level of the signal. These levels are then digitized by the DVM and input to the processor where the modulation level is determined.

9-18. DVM Control. Any one of ten internal or one external measurement point may be switched to the DVM for level digitization. Switching is controlled by the processor so that measurements are made to provide current display data. In general several measurement points must be input to obtain all the displayed data. Therefore the processor continuously cycles the switch through the required inputs stopping at each one long enough to digitize and input its level.

9-19. The Internal DVM Select switch is followed by a range attenuator. As the processor cycles through the inputs it sets the range attenuator according to the last cycle reading made at that input. Thus each internal input is auto ranged over two decades to give three digit accuracy up to a maximum input of 10 volts. The internal DVM inputs and their function are listed in table 9-1.

Table 9-1. Internal DVM Inputs

+ Peak Voltage	Positive modulation measurements
- Peak Voltage	Negative modulation measurements
Carrier Level	RF output level
RF INPUT PWR	Power level applied to the RF input/output port
EXT FWD PWR	Forward power level on external inline wattmeter element.
EXT RFL PWR	Reflected power level on external inline wattmeter element.
BATT VOLT	voltage level at DC input jack on the rear panel
TEMP SENS VOLT	+5V level signal the processor that the RF load temperature is too high.
SINAD OUT	DC level proportional to the signal power at the output of the SINAD notch filter.
SINAD IN	DC level proportional to the signal power at the input of the SINAD notch filter.

9-20. External DVM inputs to the front panel jack are ranged by the processor over a four decade range before being routed to the DVM switch. At the Internal/External DVM Select switch the external DVM FROM RNG SW signal or the internal signal from the x0.1 Attenuator is selected to the DVM to A/D signal line for digitization.

9-21. SINAD Detection. The SINAD of a signal on the DVM FROM RNG SW line is determined by taking the ratio of the input to the output signal power on the 1 kHz Notch Filter. Signal power is determined by Rectifier and Filter circuits whose outputs are DC levels proportional to the input signal levels. The DC levels, SINAD IN and SINAD OUT are digitized and input to the processor where the SINAD is calculated.

9-22. Module Control. Processor control of the Scope/DVM Control module is via the AF ADD BUS 0-3, the AF DATA BUS 0-3, and the AF BUS EN 1 signal lines. The four address bits are decoded by the Address Decode to determine which Control Latch the fours bits of data will be latched. The latching process is synchronized by the enable line. Control latches in addition to those necessary for controlling the module provide control for the Scope Amplifier module and part of the RF Input module.

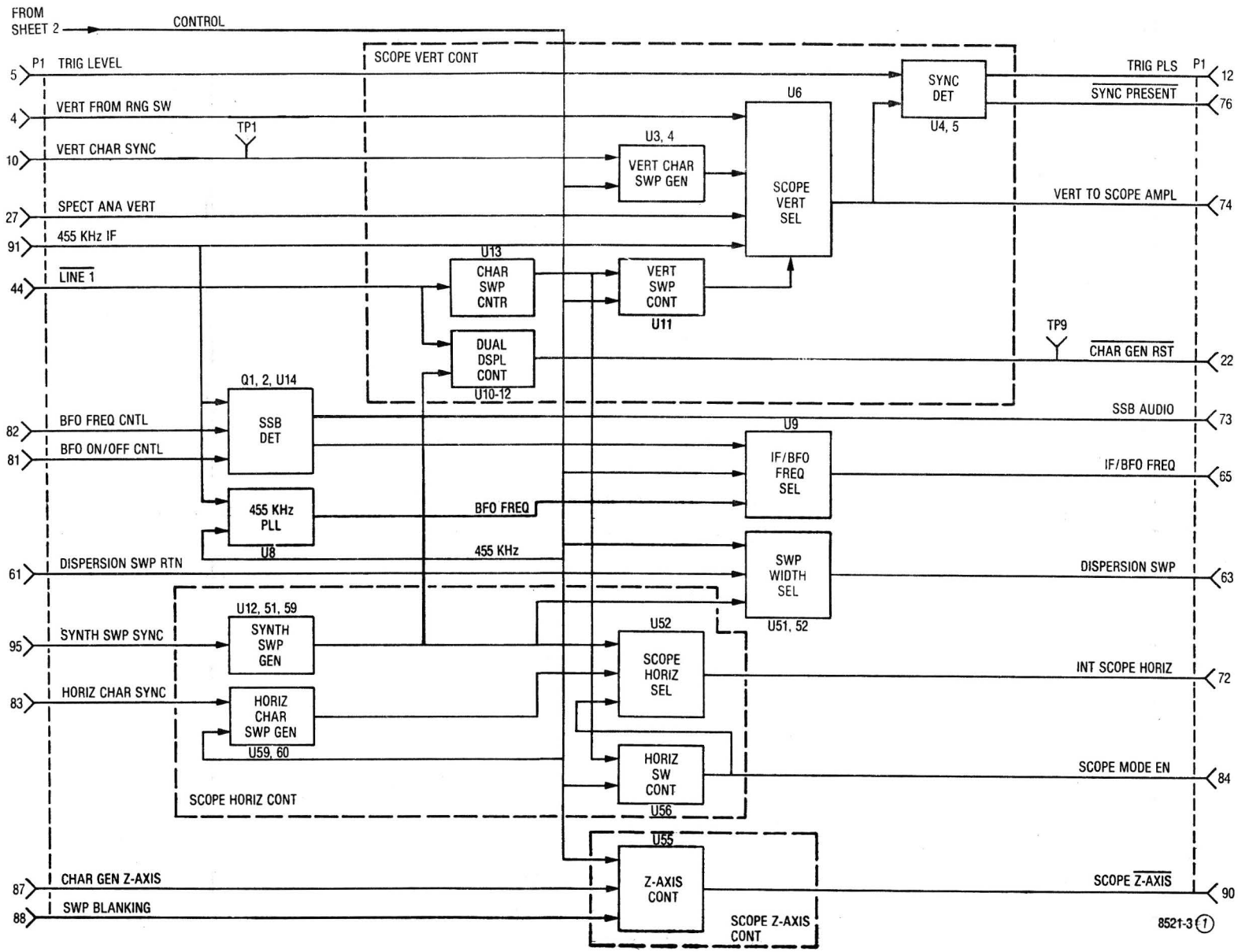

Figure 9-1. Scope/DVM Control Module A3 Block Diagram (Sheet 1 of 2)

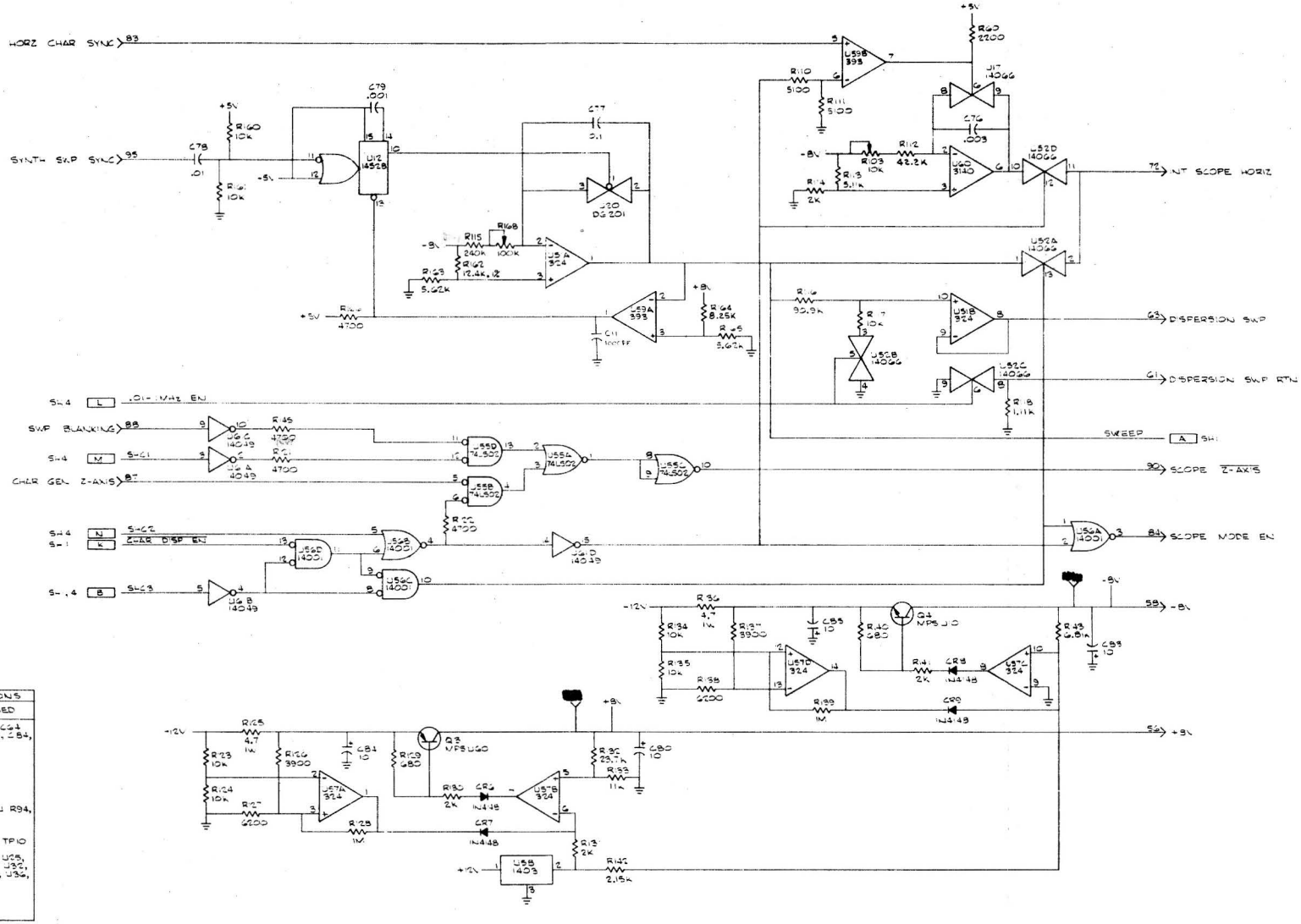

REF DESIGNATIONS	
HIGHEST USED	NOT USED
C89	C47, C50, C64 THRU C74, C84, C85
CR15	CR12
L1	
Q4	
R45	R30 THRU R34, R103
TP12	TP5, TP7, TP10
U61	U15, U18, U29, U27, U31, U32, U33, U35, U36, U38
VR1	

Figure 9-2. Scope/DVM Control Module A3 Schematic Diagram (Sheet 2 of 4) (RTC-4008A)

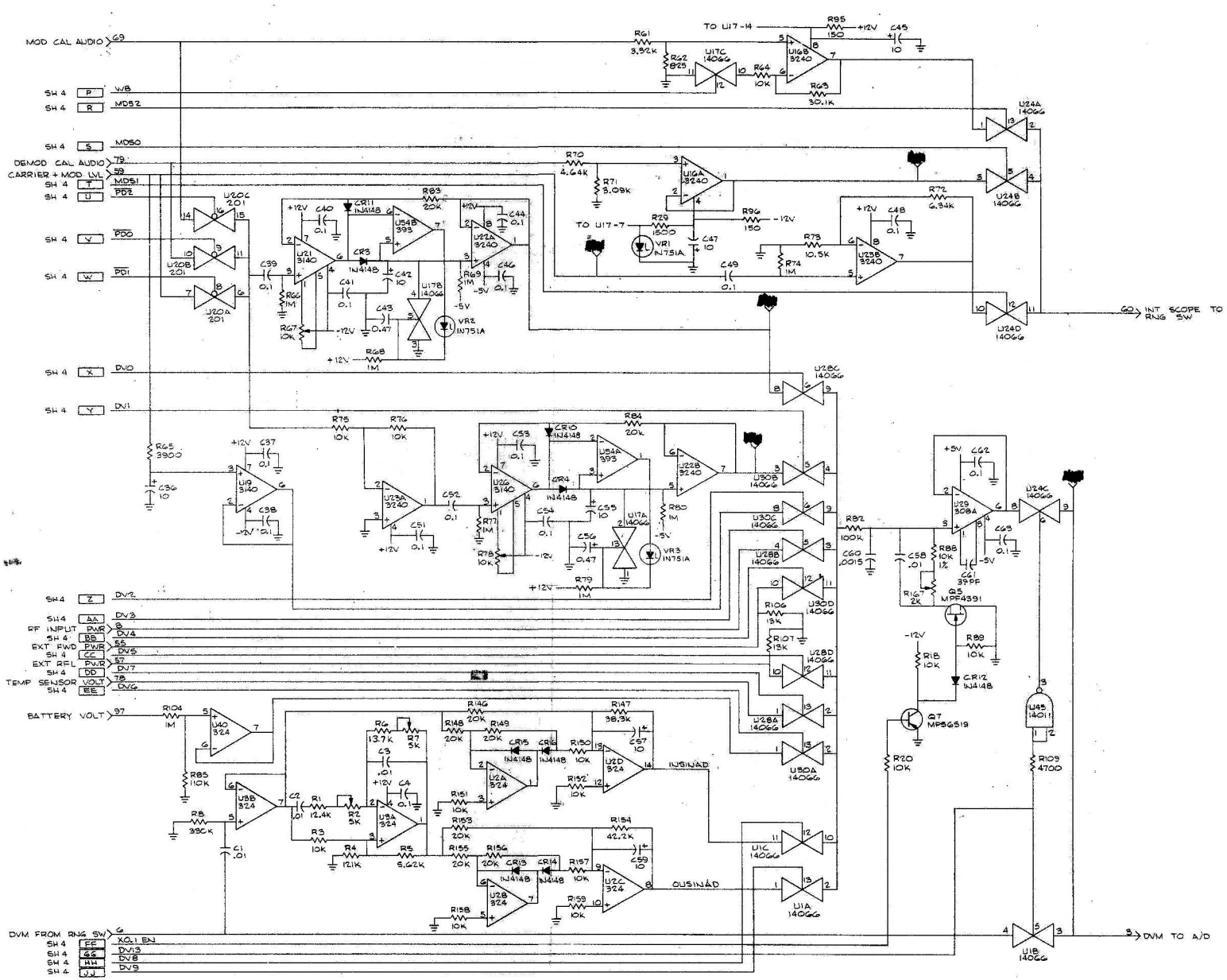

Figure 9-2. Scope/DVM Control Module A3
Schematic Diagram (Sheet 3 of 4)
(RTC-4008A)

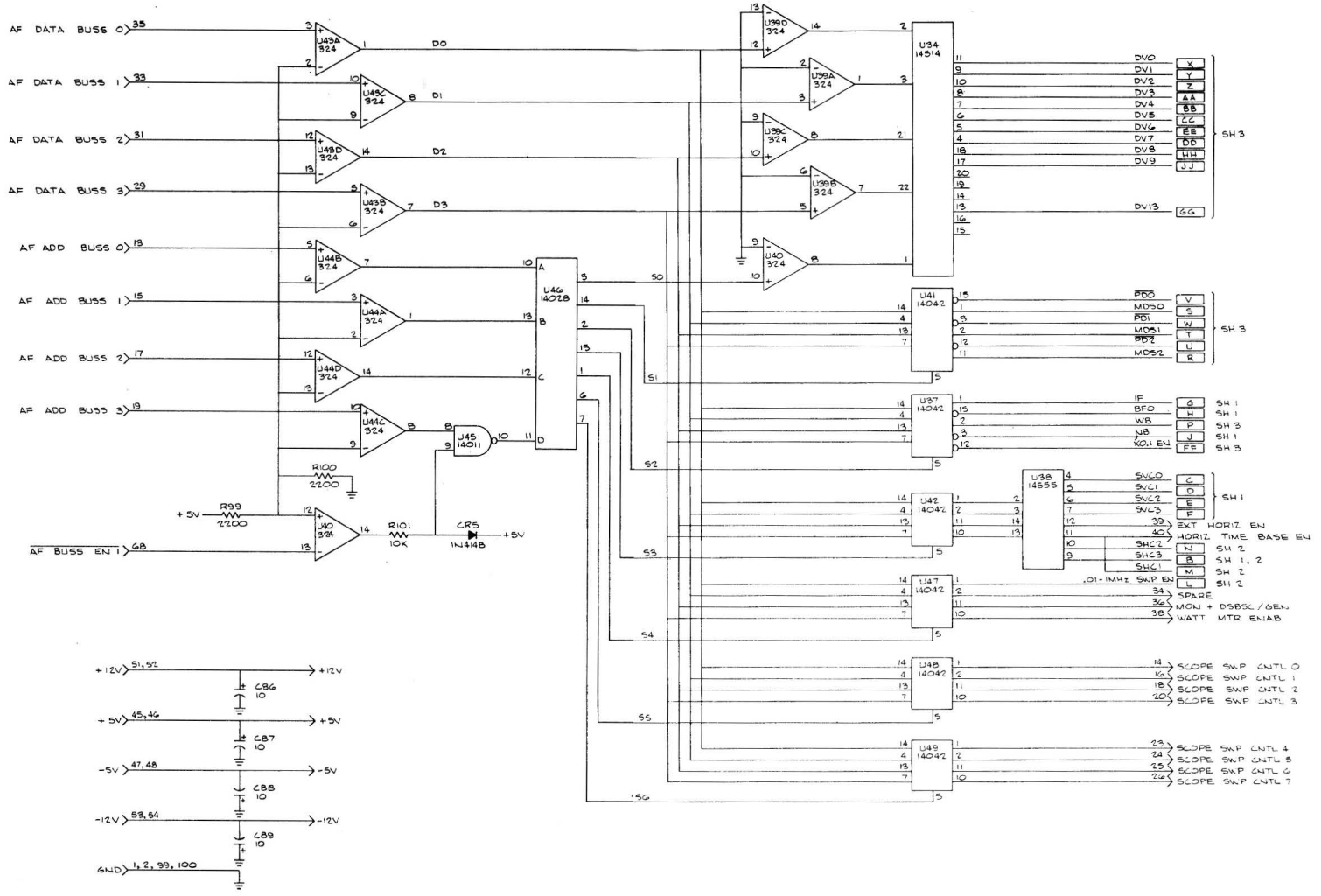

Figure 9-2. Scope/DVM Control Module A3 Schematic Diagram (Sheet 4 of 4) (RTC-4008A)

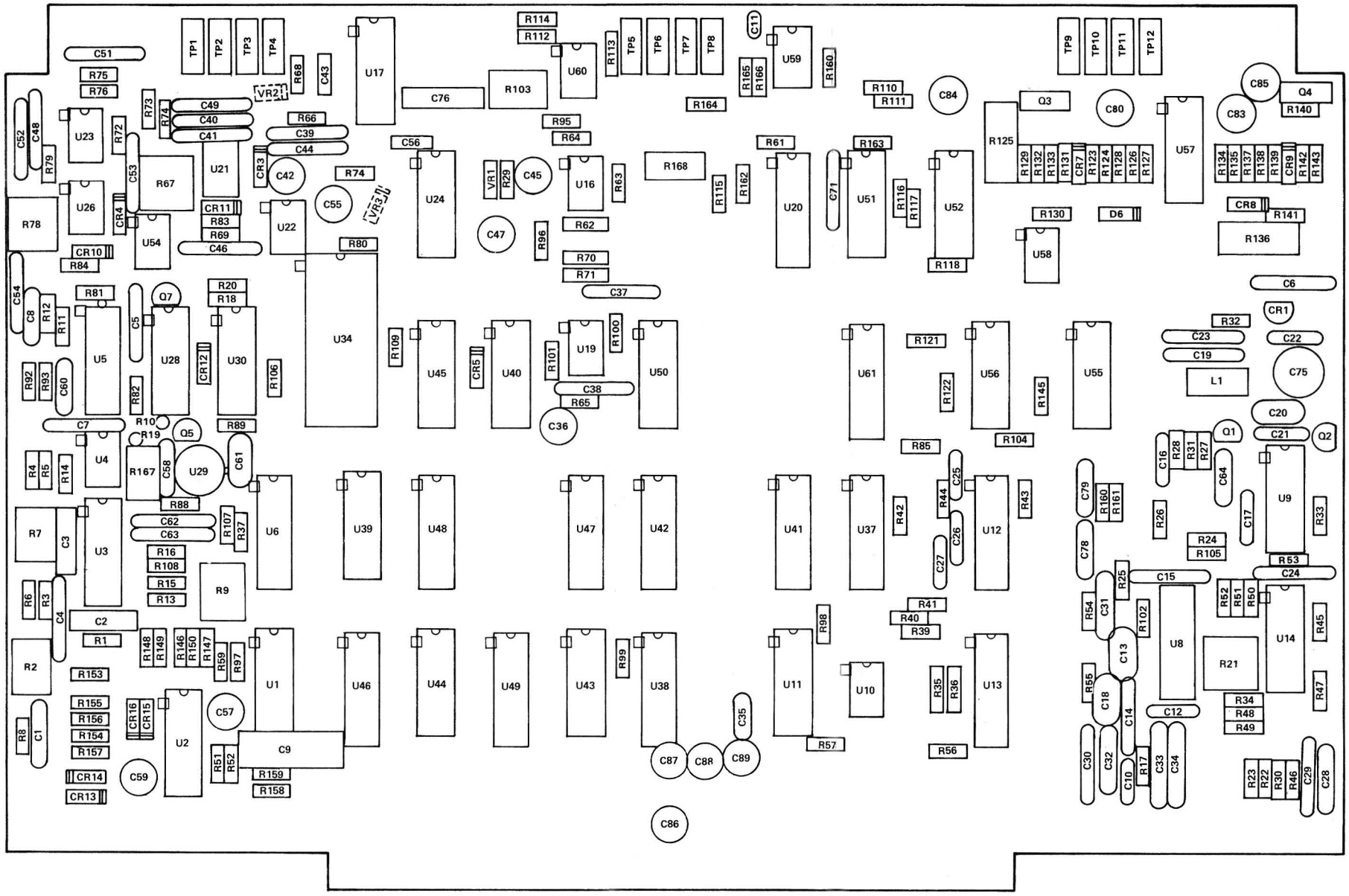

Figure 9-3. Scope/DVM Control Module Parts Locator

Scope/DVM Control A3
RTC-4008A

01 Find No.	Qty. Req.		Nomenclature	Part Value
001	1	84-P00460N001	PWB, SCOPE/DVM CONT	
002	AR	SN63WRMAP3	SOLDER	
003	AR	11-14167A01	INK	BLACK
004	1	07-P00499N001	BRACKET,PWB MTG	
005	4	MS20470AD4-5	RIVET	1/8X.312
006	2	5C84500B03	EYELET	
007	2	42C84284B01	RETAINER	
008	2	MS35206-214	SCREW,PH	4-40X.312
009	12	M39024/11-01	JACK,TIP	WHITE
010	AR		WIRE	26 WHT
011	AR		INSULATION SLEEVING	24 WHT
C 001	1	21D82428B19	CAPACITOR	0.01UF-20-500
C 002	1	08D80332A33	CAPACITOR	0.01UF-10-400
C 003	REF	08D80332A33	CAPACITOR	0.01UF-10-400
C 004	1	21C82372C09	CAPACITOR	.1UF80-20-25
C 005	1	21C82372C05	CAPACITOR	.2UF80-20-25
C 006	1	21C82372C09	CAPACITOR	.1UF80-20-25
C 007	1	21C82372C09	CAPACITOR	.1UF80-20-25
C 008	1	21D84494B45	CAPACITOR	56PF-5-500
C 009	1	08D82905G27	CAPACITOR	0.1UF-10-50
C 010	1	21D82428B62	CAPACITOR	.01UF80-20-200
C 011	1	UK16-104	CAPACITOR	.1UF-20-16
C 012	1	21D82187B14	CAPACITOR	1000PF-10-100
C 013	1	21D84494B04	CAPACITOR	100PF-5-500
C 014	1	21C82372C09	CAPACITOR	.1UF80-20-25
C 015	1	21C82372C09	CAPACITOR	.1UF80-20-25
C 016	1	21D82187B14	CAPACITOR	1000PF-10-100
C 017	1	UK16-104	CAPACITOR	.1UF-16
C 018	1	21D84494B37	CAPACITOR	11PF-5-500
C 019	1	21C82372C09	CAPACITOR	.1UF80-20-25
C 020	1	21D82610C58	CAPACITOR	100PF-N750
C 021	1	21D82428B10	CAPACITOR	3300PF-10-100
C 022	1	21D84494B01	CAPACITOR	51PF-5-500
C 023	1	21C82372C09	CAPACITOR	.1UF80-20-25
C 024	1	21C82372C09	CAPACITOR	.1UF80-20-25
C 025	1	21D82428B09	CAPACITOR	4700PF-10-100
C 026	1	21D82187B14	CAPACITOR	1000PF-10-100
C 027	1	21D82187B14	CAPACITOR	1000PF-10-100
C 028	1	21D82428B62	CAPACITOR	.01UF80-20-200
C 029	1	21C82372C09	CAPACITOR	.1UF80-20-25
C 030	1	21C82372C09	CAPACITOR	.1UF80-20-25
C 031	1	21D82428B19	CAPACITOR	0.01UF-20-500
C 032	1	21D82428B19	CAPACITOR	0.01UF-20-500
C 033	1	21C82372C09	CAPACITOR	.1UF80-20-25
C 034	1	21C82372C09	CAPACITOR	.1UF80-20-25
C 035	1	21D82187B14	CAPACITOR	1000PF-10-100
C 036	1	23D84665F01	CAPACITOR	10UF-25V
C 037	1	21C82372C09	CAPACITOR	.1UF80-20-25
C 038	1	21C82372C09	CAPACITOR	.1UF80-20-25
C 039	1	21C82372C09	CAPACITOR	.1UF80-20-25
C 040	1	21C82372C09	CAPACITOR	.1UF80-20-25
C 041	1	21C82372C09	CAPACITOR	.1UF80-20-25
C 042	1	23D84665F01	CAPACITOR	10UF-25V
C 043	1	23D84762H14	CAPACITOR	.47UF-20-50
C 044	1	21C82372C09	CAPACITOR	.1UF80-20-25
C 045	1	23D84665F01	CAPACITOR	10UF-25V
C 046	1	21C82372C09	CAPACITOR	.1UF80-20-25
C 047	1	23D84665F01	CAPACITOR	10UF-25V
C 048	1	21C82372C09	CAPACITOR	.1UF80-20-25
C 049	1	21C82372C09	CAPACITOR	.1UF80-20-25
C 051	1	21C82372C09	CAPACITOR	.1UF80-20-25

Find No.	Qty. Req.	Part No.	Nomenclature	Part Value
C 052	1	21C82372C09	CAPACITOR	.1UF80-20-25
C 053	1	21C82372C09	CAPACITOR	.1UF80-20-25
C 054	1	21C82372C09	CAPACITOR	.1UF80-20-25
C 055	1	23D84665F01	CAPACITOR	10UF-25V
C 056	1	23D84762H14	CAPACITOR	.47UF-20-50
C 057	1	23D84665F01	CAPACITOR	10UF-25V
C 058	1	21D82428B62	CAPACITOR	.01UF80-20-200
C 059	1	23D84665F01	CAPACITOR	10UF-25V
C 060	1	21D82187B11	CAPACITOR	1500PF-10-100
C 061	1	21D84494B24	CAPACITOR	39PF-5-500
C 062	1	21C82372C09	CAPACITOR	.1UF80-20-25
C 063	1	21C82372C09	CAPACITOR	.1UF80-20-25
C 064	1	21D82610C58	CAPACITOR	100PF-N750
C 075	1	CV31E600	CAPACITOR	15 TO 60PF-200
C 076	1	08D82905G25	CAPACITOR	.0033-10-100
C 077	1	M39014/02-1350	CAPACITOR	.1UF-10-100
C 078	1	21D82428B62	CAPACITOR	.01UF80-20-25
C 079	1	21D82187B14	CAPACITOR	1000PF-10-100
C 080	1	23D84665F01	CAPACITOR	10UF-25V
C 083	1	23D84665F01	CAPACITOR	10UF-25V
C 084	1	23D84665F01	CAPACITOR	10UF-25V
C 085	1	23D84665F01	CAPACITOR	10UF-25V
C 086	1	23D84665F01	CAPACITOR	10UF-25V
C 087	1	23D84665F01	CAPACITOR	10UF-25V
C 088	1	23D84665F01	CAPACITOR	10UF-25V
C 089	1	23D84665F01	CAPACITOR	10UF-25V
CR001	1	48-80345A73	DIODE	
CR003	1	48-84463K02	DIODE	
CR004	1	48-84463K02	DIODE	
CR005	1	48-84463K02	DIODE	
CR006	1	48-84463K02	DIODE	
CR007	1	48-84463K02	DIODE	
CR008	1	48-84463K02	DIODE	
CR009	1	48-84463K02	DIODE	
CR010	1	48-84463K02	DIODE	
CR011	1	48-84463K02	DIODE	
CR012	1	48-84463K02	DIODE	
CR013	1	48-84463K02	DIODE	
CR014	1	48-84463K02	DIODE	
CR015	1	48-84463K02	DIODE	
CR016	1	48-84463K02	DIODE	
L 001	1	MS90539-07	COIL	470UH
Q 001	1	48R00869570	TRANSISTOR	
Q 002	1	48R00869570	TRANSISTOR	
Q 003	1	48-80341A48	TRANSISTOR	
Q 004	1	48-80341A47	TRANSISTOR	
Q 005	1	48-80345A48	TRANSISTOR	
Q 007	1	48R00869571	TRANSISTOR	
R 001	1	06-10621D01	RESISTOR	12.4K-1-1/8
R 002	1	18D83452F11	RESISTOR,VARIABLE	5K
R 003	1	06D83175C03	RESISTOR	10K-1-1/4
R 004	1	06-10621D96	RESISTOR	121K-1-1/8
R 005	1	06-10621C67	RESISTOR	5620-1-1/8
R 006	1	06-10621D05	RESISTOR	13.7K-1-1/8
R 007	1	18D83452F11	RESISTOR,VARIABLE	5K
R 008	1	6S124B10	RESISTOR	330K-5-1/4
R 009	1	18D83452F17	RESISTOR,VARIABLE	50K
R 010	1	6S124A97	RESISTOR	100K-5-1/4
R 011	1	6S124A73	RESISTOR	10K-5-1/4
R 012	1	6S124A61	RESISTOR	3.3K-5-1/4
R 013	1	6S124A66	RESISTOR	5.1K-5-1/4

Find No.	Qty. Req.		Nomenclature	Part Value
R 014	1	6S124A66	RESISTOR	5.1K-5-1/4
R 015	1	06D84444A16	RESISTOR	2000-1-1/4
R 016	1	06-10621E27	RESISTOR	249K-1-1/8
R 017	1	6S124A49	RESISTOR	1K-5-1/4
R 018	1	6S124A73	RESISTOR	10K-5-1/4
R 019	1	6S124B38	RESISTOR	4.7M-5-1/4
R 020	1	6S124A73	RESISTOR	10K-5-1/4
R 021	1	18D83452F12	RESISTOR,VARIABLE	5K
R 022	1	06-10621D24	RESISTOR	21.5K-1-1/8
R 023	1	06D84444A27	RESISTOR	42.2K-1-1/4
R 024	1	6S124A79	RESISTOR	18K-5-1/4
R 025	1	6S124A97	RESISTOR	100K-5-1/4
R 026	1	6S124A66	RESISTOR	5.1K-5-1/4
R 027	1	6S124A25	RESISTOR	100-5-1/4
R 028	1	6S124A25	RESISTOR	100-5-1/4
R 029	1	6S124A41	RESISTOR	470-5-1/4
R 030	1	6S124A81	RESISTOR	22K-5-1/4
R 031	1	6S124A53	RESISTOR	1.5K-5-1/4
R 032	1	6S124A89	RESISTOR	47K-5-1/4
R 033	1	6S124A41	RESISTOR	470-5-1/4
R 034	1	6S124A57	RESISTOR	2.2K-5-1/4
R 035	1	06D83175C10	RESISTOR	12.4K-1-1/4
R 036	1	06D84444A45	RESISTOR	5.62K-1-1/20
R 037	1	6S124A73	RESISTOR	10K-5-1/4
R 039	1	6S124A73	RESISTOR	10K-5-1/4
R 040	1	6S124A65	RESISTOR	4.7K-5-1/4
R 041	1	6S124A65	RESISTOR	4.7K-5-1/4
R 042	1	6S124A97	RESISTOR	100K-5-1/4
R 043	1	6S124A97	RESISTOR	100K-5-1/4
R 044	1	6S124A97	RESISTOR	100K-5-1/4
R 045	1	6S124A63	RESISTOR	3.9K-5-1/4
R 046	1	6S124A56	RESISTOR	2.0K-5-1/4
R 047	1	6S124A73	RESISTOR	10K-5-1/4
R 048	1	6S124A77	RESISTOR	15K-5-1/4
R 049	1	6S124A49	RESISTOR	1K-5-1/4
R 050	1	6S124A53	RESISTOR	1.5K-5-1/4
R 051	1	6S124A49	RESISTOR	1K-5-1/4
R 052	1	6S124A62	RESISTOR	3.6K-5-1/4
R 053	1	6S124A63	RESISTOR	3.9K-5-1/4
R 054	1	6S124A63	RESISTOR	3.9K-5-1/4
R 055	1	6S124A49	RESISTOR	1K-5-1/4
R 056	1	6S124A63	RESISTOR	3.9K-5-1/4
R 057	1	6S124A73	RESISTOR	10K-5-1/4
R 059	1	6S124A77	RESISTOR	15K-5-1/4
R 060	1	6S124A57	RESISTOR	2.2K-5-1/4
R 061	1	06-10621C45	RESISTOR	3320-1-1/8
R 062	1	06-10621B86	RESISTOR	825-1-1/8
R 063	1	06-10621D38	RESISTOR	30.1K-1-1/8
R 064	1	06D83175C03	RESISTOR	10K-1-1/4
R 065	1	6S124A63	RESISTOR	3.9K-5-1/4
R 066	1	6S124B22	RESISTOR	1M-5-1/4
R 067	1	18D83452F14	RESISTOR,VARIABLE	10K
R 068	1	6S124B22	RESISTOR	1M-5-1/4
R 069	1	6S124B22	RESISTOR	1M-5-1/4
R 070	1	06-10621C59	RESISTOR	4640-1-1/8
R 071	1	06-10621C42	RESISTOR	3090-1-1/8
R 072	1	06D84444A40	RESISTOR	6.34K-1-1/4
R 073	1	06D83175C04	RESISTOR	10.5K-1-1/4
R 074	1	6S124B22	RESISTOR	1M-5-1/4
R 075	1	06D83175C03	RESISTOR	10K-1-1/4

ASSEMBLY PARTS LIST

Scope/DVM Control Module
(Sheet 1)

Find No.	Qty. Req.		Nomenclature	Part Value
R 076	1	06D83175C03	RESISTOR	10K-1-1/4
R 077	1	6S124B22	RESISTOR	1M-5-1/4
R 078	1	18D83452F14	RESISTOR,VARIABLE	10K
R 079	1	6S124B22	RESISTOR	1M-5-1/4
R 080	1	6S124B22	RESISTOR	1M-5-1/4
R 081	1	6S124B22	RESISTOR	1M-5-1/4
R 082	1	06-10621D88	RESISTOR	100K-1-1/8
R 083	1	6S124A80	RESISTOR	20K-5-1/4
R 084	1	6S124A80	RESISTOR	20K-5-1/4
R 085	1	06-10621D92	RESISTOR	110K-5-1/8
R 088	1	06-10621C91	RESISTOR	10K-1-1/8
R 089	1	6S124A73	RESISTOR	10K-5-1/4
R 092	1	6S124A49	RESISTOR	1K-5-1/4
R 093	1	6S124A53	RESISTOR	1.5K-5-1/4
R 095	1	6S124A29	RESISTOR	150-5-1/4
R 096	1	6S124A29	RESISTOR	150-5-1/4
R 097	1	6S124A73	RESISTOR	10K-5-1/4
R 098	1	6S124A73	RESISTOR	10K-5-1/4
R 099	1	6S124A57	RESISTOR	2.2K-5-1/4
R 100	1	6S124A57	RESISTOR	2.2K-5-1/4
R 101	1	6S124A73	RESISTOR	10K-5-1/4
R 102	1	6S124A65	RESISTOR	4.7K-5-1/4
R 103	1	18D83452F13	RESISTOR,VARIABLE	10K
R 104	1	06-10621E85	RESISTOR	1M-1-1/8
R 105	1	6S124A43	RESISTOR	560-5-1/4
R 106	1	06D83175C12	RESISTOR	13.0K-1-1/4
R 107	1	06D83175C12	RESISTOR	13.0K-1-1/4
R 108	1	06D84444A42	RESISTOR	7.15K-1-1/4
R 109	1	6S124A65	RESISTOR	4.7K-5-1/4
R 110	1	6S124A66	RESISTOR	5.1K-5-1/4
R 111	1	6S124A66	RESISTOR	5.1K-5-1/4
R 112	1	06-10621D52	RESISTOR	42.2K-1-1/8
R 113	1	06D83175C83	RESISTOR	5.11K-1-1/4
R 114	1	06D84444A16	RESISTOR	2000-1-1/4
R 115	1	06-10621D36	RESISTOR	28.7K-1-1/8
R 116	1	06D83175C76	RESISTOR	90.9K-1-1/4
R 117	1	06D83175C03	RESISTOR	10K-1-1/4
R 118	1	06-10621B98	RESISTOR	1100-1-1/8
R 121	1	6S124A65	RESISTOR	4.7K-5-1/4
R 122	1	6S124A65	RESISTOR	4.7K-5-1/4
R 123	1	6S124A73	RESISTOR	10K-5-1/4
R 124	1	6S124A73	RESISTOR	10K-5-1/4
R 125	1	6S126B61	RESISTOR	4.7-5-1
R 126	1	6S124A63	RESISTOR	3.9K-5-1/4
R 127	1	6S124A68	RESISTOR	6.2K-5-1/4
R 128	1	6S124B22	RESISTOR	1M-5-1/4
R 129	1	6S124A45	RESISTOR	680-5-1/4
R 130	1	6S124A56	RESISTOR	2.0K-5-1/4
R 131	1	6S124A56	RESISTOR	2.0K-5-1/4
R 132	1	06-10621D28	RESISTOR	23.7K-1-1/4
R 133	1	06-10621C95	RESISTOR	11K-1-1/8
R 134	1	6S124A73	RESISTOR	10K-5-1/4
R 135	1	6S124A73	RESISTOR	10K-5-1/4
R 136	1	6S126B61	RESISTOR	4.7-5-1
R 137	1	6S124A63	RESISTOR	3.9K-5-1/4
R 138	1	6S124A68	RESISTOR	6.2K-5-1/4
R 139	1	6S124B22	RESISTOR	1M-5-1/4
R 140	1	6S124A45	RESISTOR	680-5-1/4
R 141	1	6S124A56	RESISTOR	2.0K-5-1/4
R 142	1	06-10621C27	RESISTOR	2150-1-1/8
R 143	1	06-10621F55	RESISTOR	6.81K-1-1/8

Find No.	Qty. Req.		Nomenclature	Part Value
R 145	1	6S124A65	RESISTOR	4.7K-5-1/4
R 146	1	06-10621D21	RESISTOR	20K-1-1/8
R 147	1	06-10621D48	RESISTOR	38.3K-1-1/8
R 148	1	06-10621D21	RESISTOR	20K-1-1/8
R 149	1	06-10621D21	RESISTOR	20K-1-1/8
R 150	1	06D83175C03	RESISTOR	10K-1-1/4
R 151	1	6S124A73	RESISTOR	10K-5-1/4
R 152	1	6S124A73	RESISTOR	10K-5-1/4
R 153	1	06-10621D21	RESISTOR	20K-1-1/8
R 154	1	06-10621D52	RESISTOR	42.2K-1-1/8
R 155	1	06-10621D21	RESISTOR	20K-1-1/8
R 156	1	06-10621D21	RESISTOR	20K-1-1/8
R 157	1	06D83175C03	RESISTOR	10K-1-1/4
R 158	1	6S124A73	RESISTOR	10K-5-1/4
R 159	1	6S124A73	RESISTOR	10K-5-1/4
R 160	1	6S124A73	RESISTOR	10K-5-1/4
R 161	1	6S124A73	RESISTOR	10K-5-1/4
R 162	1	06-10621D01	RESISTOR	12.4K-1-1/8
R 163	1	06-10621C67	RESISTOR	5620-1-1/8
R 164	1	06-10621C83	RESISTOR	8250-1-1/8
R 165	1	06-10621C67	RESISTOR	5620-1-1/8
R 166	1	6S124A65	RESISTOR	4.7K-5-1/4
R 167	1	18D83452F01	RESISTOR,VARIABLE	2K
R 168	1	18D83452F19	RESISTOR,VARIABLE	100K
U 001	1	51-84887K73	INTEGRATED CIRCUIT	
U 002	1	51R84320A80	INTEGRATED CIRCUIT	
U 003	1	51R84320A80	INTEGRATED CIRCUIT	
U 004	1	5180345A10	INTEGRATED CIRCUIT	
U 005	1	51R82822F35	INTEGRATED CIRCUIT	
U 006	1	51-80345A05	INTEGRATED CIRCUIT	
U 008	1	51-80345A19	INTEGRATED CIRCUIT	
U 009	1	51-84887K73	INTEGRATED CIRCUIT	
U 010	1	5180345A10	INTEGRATED CIRCUIT	
U 011	1	51-84928F02	INTEGRATED CIRCUIT	
U 012	1	51R82822F35	INTEGRATED CIRCUIT	
U 013	1	51-84887K33	INTEGRATED CIRCUIT	
U 014	1	51-06472A26	INTEGRATED CIRCUIT	
U 016	1	51-80345A04	INTEGRATED CIRCUIT	
U 017	1	51-84887K73	INTEGRATED CIRCUIT	
U 019	1	51-80345A01	INTEGRATED CIRCUIT	
U 020	1	51-80345A05	INTEGRATED CIRCUIT	
U 021	1	51-80345A01	INTEGRATED CIRCUIT	
U 022	1	51-80345A04	INTEGRATED CIRCUIT	
U 023	1	51-80345A04	INTEGRATED CIRCUIT	
U 024	1	51-84887K73	INTEGRATED CIRCUIT	
U 026	1	51-80345A01	INTEGRATED CIRCUIT	
U 028	1	51-84887K73	INTEGRATED CIRCUIT	
U 029	1	51-80346A53	INTEGRATED CIRCUIT	
U 030	1	51-84887K73	INTEGRATED CIRCUIT	
U 034	1	51-84887K72	INTEGRATED CIRCUIT	
U 037	1	51-84887K10	INTEGRATED CIRCUIT	
U 038	1	51-82822F64	INTEGRATED CIRCUIT	
U 039	1	51R84320A80	INTEGRATED CIRCUIT	
U 040	1	51R84320A80	INTEGRATED CIRCUIT	
U 041	1	51-84887K10	INTEGRATED CIRCUIT	
U 042	1	51-84887K10	INTEGRATED CIRCUIT	
U 043	1	51R84320A80	INTEGRATED CIRCUIT	
U 044	1	51R84320A80	INTEGRATED CIRCUIT	
U 045	1	51-84928F02	INTEGRATED CIRCUIT	
U 046	1	51-80345A16	INTEGRATED CIRCUIT	
U 047	1	51-84887K10	INTEGRATED CIRCUIT	
U 048	1	51-84887K10	INTEGRATED CIRCUIT	

Find No.	Qty. Req.	Part No.	Nomenclature	Part Value
U 049	1	51-84887K10	INTEGRATED CIRCUIT	
U 050	1	51R84887K09	INTEGRATED CIRCUIT	
U 051	1	51R84320A80	INTEGRATED CIRCUIT	
U 052	1	51-84887K73	INTEGRATED CIRCUIT	
U 054	1	5180345A10	INTEGRATED CIRCUIT	
U 055	1	51-84118K13	INTEGRATED CIRCUIT	
U 056	1	51R84887K09	INTEGRATED CIRCUIT	
U 057	1	51R84320A80	INTEGRATED CIRCUIT	
U 058	1	51-80345A18	INTEGRATED CIRCUIT	
U 059	1	5180345A10	INTEGRATED CIRCUIT	
U 060	1	51-80345A01	INTEGRATED CIRCUIT	
U 061	1	51-10843A06	INTEGRATED CIRCUIT	
VR001	1	48-82556C15	DIODE,ZENER	5.1V-10-.4
VR002	1	48-82556C15A	DIODE,ZENER	5.1V-5-.4
VR003	1	48-82556C15A	DIODE,ZENER	5.1V-5-.4

ASSEMBLY PARTS LIST

Scope/DVM Control Module
(Sheet 2)

SECTION 10

RECEIVER (A4)

10-1. General. The Receiver down converts the 10.7 MHz first IF signal to 455 kHz. Following the down conversion a linearoralogarithimic IF amplifier provide the gain prior to AM and FM detectors or the spectrum analyzer detector respectively. Post detection filtering provides the wide or narrow band responses for the audio outputs. The audio amplifier for the speaker and the alarm generator are also contained on this module. A block diagram of the Receiver is shown in figure 10-1 and its schematic in figure 10-2.

10-2. Down Converter. The 10.7 MHz IF signal is converted to 455 kHz by mixing with a 10.245 MHz local oscillator. The local oscillator is phase locked to the system 10 MHz frequency standard. A sample of the 10.245 MHz VCO signal is output to the Processor I/O module. There the VCO signal is mixed with 10 MHz, the difference is divided by 49, and the result compared with a 5 kHz reference obtained from the 10 MHz. Any frequency difference causes a correction to be made to the VCO frequency via the 10.245 MHz VCO TV line through the Loop Filter.

10-3. The IF filter following the mixer provides the selectivity for the system. Two bandwidths, ±100 kHz wideband and ±13 kHz narrowband, are processor selectable to corresponrfthe front panel bandwidth control.

10-4. Linear IF Amplifier and Detectors. The linear IF Amplifier amplifies the 455 kHz signal to the AM and FM detectors. The DC signal from the AM detector is fed to the AGC Amplifier and Squelch Detection circuitry. There it is compared to the AGC reference with the resulting AGC signal controlling the gain of the IF Amplifier. For signal present indication and squelch operation the SQUELCH LVL from the front panel is compared to the AGC voltage. When the AGC voltage fall below the squelch level, indicating a strong signal, the SIG PRESENT line is activated. With the SIG PRESENT active the audio is allowed through the select switch and the signal present light on the front panel is illuminated. To warn the operator when the IF input level is beyond the linear range of the IF amplifier, the AGC voltage is also compared to a fixed IF overload level. When this level is exceeded, the IFOVLD line is activated causing the processor to flash the warning on the CRT display.

10-5. The AC component from the AM detector is buffered by the Audio Buffer and then passed to the Audio Select switch. The lower 3 dB corner on the AM audio response is approximately 100 Hz.

10-6. Frequency modulation is recovered by a dual bandwidth phase locked loop discriminator. The bandwidth, wide or narrow, is selected coincident with the IF Filter bandwidth. Audio from the discriminator is applied to the Audio Select switch.

10-7. A 455 kHz Buffer amplifier provides an interface between the IF Amplifier output and the IF processing circuits on the Scope/DVM Control module.

10-8. Audio Switching and Filtering. The output of the AM or FM detector or the SSB AUDIO signal from the Scope/DVM Control module can be selected as the demodulated audio output. Selection is made by the processor depending on the operating mode and the presence of the active state on the SIG PRESENT line. If the SIG PRESENT line is not active, the Audio Select switch is opened squelching the audio signal.

10-9. The Audio Filter provides either wide or narrow band filtering on the recovered audio. For wideband a 0.5 dB bandwidth of 100 kHz is provided.while narrowband hasa0.5dB bandwidth of 3kHz. Theoutput of the filter is separately buffered to three signal lines. The DEMOD CAL AUD signal is used on the Scope/DVM

Control module for modulation determination, the DEMOD OUT signal goes to the front panel jack, and the VOL CNTL ADD provides the drive to the speaker audio amplifier.

10-10. Logarithmic Amplifier and Detector. For the spectrum analyzer function the logarithmic IF amplifier processes the input signal level over an 80 dB range. The Amplifier is composed of four 20 dB sections summed together. Amplitude detection at the output of the amplifier provides the SPECT ANA VERT signal to the Scope/DVM Control module.

10-11. Alarm Generator and Audio Amplifier. An astable multivibrator operating at 1.2 kHz is the Alarm Generator. The Alarm signal is controlled by the processor and is summed with the VOL CNTL AUD RTN signal at the input of the Audio Amplifier. The SPKR ADD output of the amplifier has 0.5 watt capability and is connected directly to the system speaker.

10-12. Module Control. Address decoding for the two control latches on this module is performed on the Synthesizer module. The two decoded lines, RF LCHADD13and RFLCH ADD 14, determine which Control Latch the four bit data bus, RF DATA BUS 0-3, will be stored.

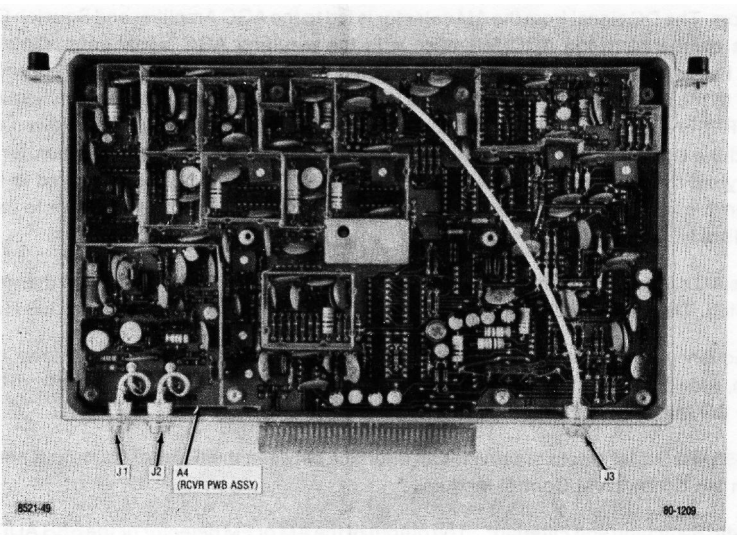

Figure 10-3. Receiver Parts Locator

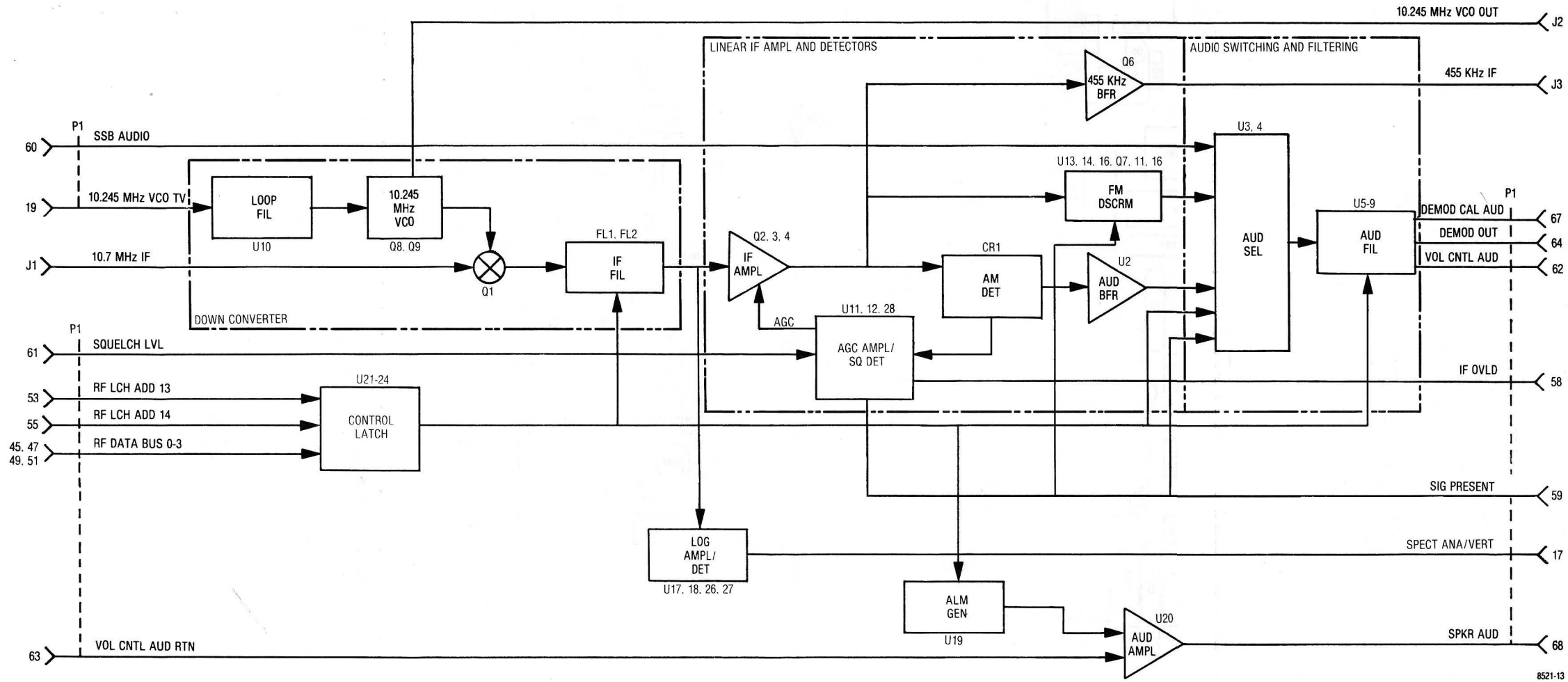

Figure 10-1. Receiver A4 Block Diagram

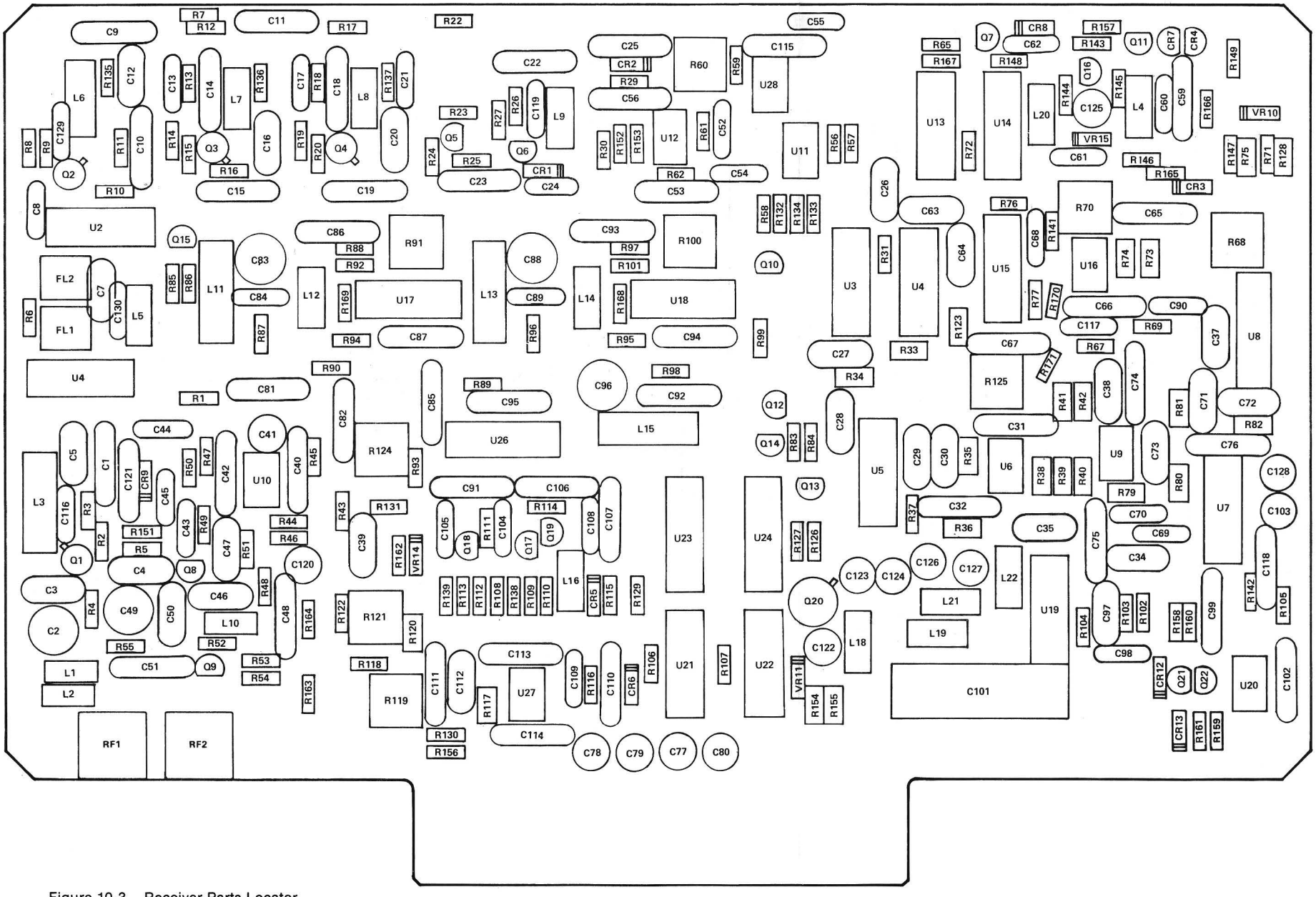

Figure 10-3. Receiver Parts Locator
(Sheet 1)

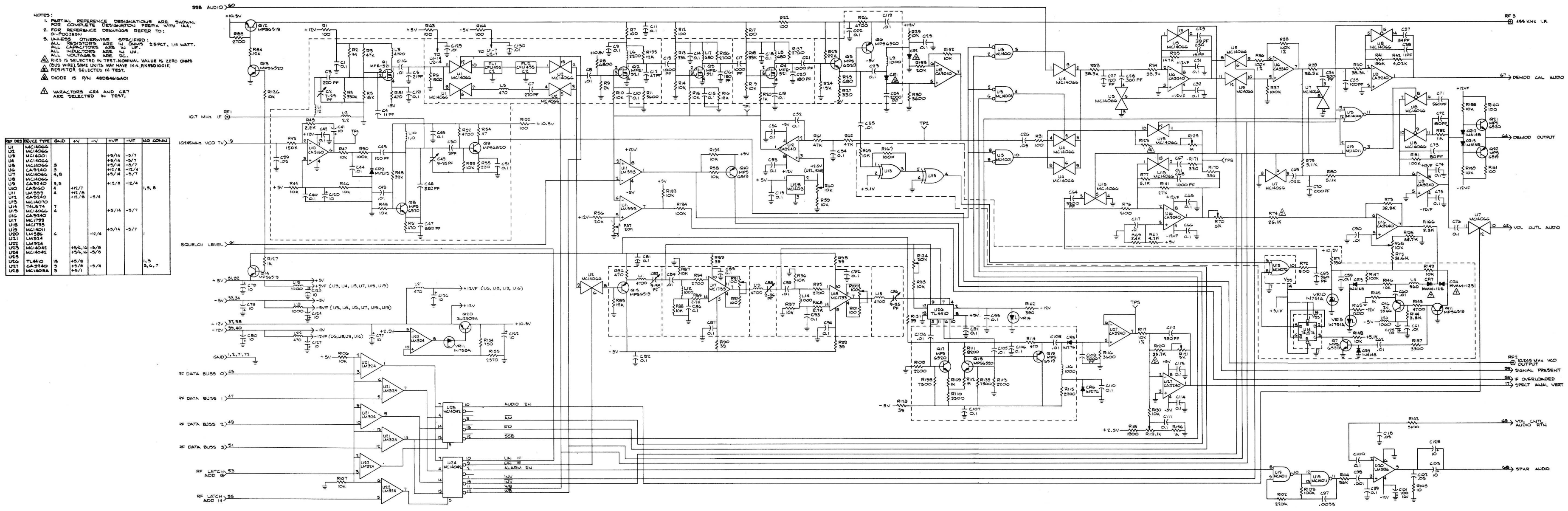

REF DES	DEVICE TYPE	GND	+V	-V	+VF	-VF	NO CONN
U1	MC14066						
U2	MC14066						
U3	MC14001				+5/14	-5/7	
U4	MC14066				+5/14	-5/7	
U5	MC14066	5			+5/14	-5/7	
U6	CA3140	2			+7/8	-7/4	
U7	MC14066	4,8			+5/14	-5/7	
U8	MC14066						
U9	CA3140	3,5			+7/8	-7/4	
U10	CA3140	4	+7/7				1,3,8
U11	LM393	4	+7/8				
U12	CA3240		+7/8	-5/4			
U13	MC14070						
U14	74LS74	7					
U15	MC14066	4			+5/14	-5/7	
U16	CA3140						
U17	MC1733						
U18	MC1733						
U19	MC14011				+5/14	-5/7	
U20	LM386	6		-7/4			1
U21	LM324						
U22	LM324						
U23	MC14042		+5/4,16	-5/8			
U24	MC14042		+5/4,16	-5/8			
U25							
U26	TL410	13	+8/8				1,3
U27	CA3140	3	+5/8	-5/4			5,6,7
U28	MC14066	5	+5/1				

Figure 10-2. Receiver A4 Schematic Diagram (RTL-1002A)

Receiver A4
RTL-1002A

Find No.	Qty. Req.	Part No.	Nomenclature	Part Value
001	1	27-80335A38	CHASSIS, RCVR	
003	1	15-80335A37	COVER,DIGITAL SYNTHES	RECIEVER
005	AR	SN63WRMAP3	SOLDER	
006	AR	11-14167A01	INK	BLACK
007	10	3S134169	SCREW,THD FORMING	4-40X.250
009	2	5C84500B03	EYELET	
010	2	42C84284B01	RETAINER	
011	2	MS35206-214	SCREW,PH	4-40X.312
012	AR	30-84421F13	CABLE,RF	WHITE
013	AR	30-14349A04	CABLE	.085
014	AR		WIRE,BUS	24
A 001	1	RTL-4047A	PWB ASSY RCVR	
J 001	1	5604-5014-00	CONNECTOR,RF	
J 002	1	5604-5014-00	CONNECTOR,RF	
J 003	1	5634-5015-00	CONNECTOR,RF	

Receiver PWB A4A1
RTL-4047A

Find No.	Qty. Req.	Part No.	Nomenclature	Part Value
001	1	84-P00466N001	PWB, RECEIVER	P/O A4
005	AR	SN63WRMAP3	SOLDER	
006	AR	11-14167A01	INK	BLACK
007	1	26-P00367N001	SHIELD	
008	1	26-P00367N002	SHIELD	
009	1	26-P00367N003	SHIELD	
010	1	26-P00367N004	SHIELD	
011	1	26-P00367N005	SHIELD	
012	1	26-P00367N006	SHIELD	
013	1	26-P00367N007	SHIELD	
014	1	26-P00367N008	SHIELD	
015	1	26-P00367N009	SHIELD	
016	1	26-P00367N010	SHIELD	
019	1	26-P00367N011	SHIELD	
020	AR		INSULATION SLEEVING	22 WHT
C 001	1	21C82372C09	CAPACITOR	.1UF80-20-25
C 002	1	CV31D250	CAPACITOR	7 TO 25PF-200
C 003	1	21D84494B12	CAPACITOR	220PF-5-500
C 004	1	21D84494B37	CAPACITOR	11PF-5-500
C 005	1	21D84494B40	CAPACITOR	21PF-5-500
C 007	1	21D84494B14	CAPACITOR	270PF-5-500
C 008	1	21D82428B62	CAPACITOR	.01UF80-20-200
C 009	1	21C82372C09	CAPACITOR	.1UF80-20-25
C 010	1	21C82372C09	CAPACITOR	.1UF80-20-25
C 011	1	21C82372C09	CAPACITOR	.1UF80-20-25
C 012	1	21D84494B44	CAPACITOR	47PF-5-500
C 013	1	21D82187B14	CAPACITOR	1000PF-10-100
C 014	1	21C82372C09	CAPACITOR	.1UF80-20-25
C 015	1	21C82372C09	CAPACITOR	.1UF80-20-25
C 016	1	21D84494B46	CAPACITOR	180PF-3-500
C 017	1	21D82187B14	CAPACITOR	1000PF-10-100
C 018	1	21C82372C09	CAPACITOR	.1UF80-20-25
C 019	1	21C82372C09	CAPACITOR	.1UF80-20-25
C 020	1	21D84494B46	CAPACITOR	180PF-3-500
C 021	1	21D82187B14	CAPACITOR	1000PF-10-100
C 022	1	21C82372C09	CAPACITOR	.1UF80-20-25
C 023	1	21C82372C09	CAPACITOR	.1UF80-20-25
C 024	1	21D82428B36	CAPACITOR	2000PF-10-200
C 025	1	21C82372C09	CAPACITOR	.1UF80-20-25
C 026	1	21C82372C10	CAPACITOR	.05UF-20-25
C 027	1	21D84494B06	CAPACITOR	120PF-5-500
C 028	1	21D84494B15	CAPACITOR	300PF-5-500
C 029	1	21D84494B24	CAPACITOR	39PF-5-500
C 030	1	21D84494B38	CAPACITOR	15PF-5-500
C 031	1	21C82372C09	CAPACITOR	.1UF80-20-25
C 032	1	21C82372C09	CAPACITOR	.1UF80-20-25
C 034	1	21D84494B15	CAPACITOR	300PF-5-500
C 035	1	21D84494B06	CAPACITOR	120PF-5-500
C 037	1	21D84494B30	CAPACITOR	34PF-5-500
C 038	1	21D84494B37	CAPACITOR	11PF-5-500
C 039	1	21C82372C10	CAPACITOR	.05UF-20-25
C 040	1	21C82372C09	CAPACITOR	.1UF80-20-25
C 041	1	23D84665F01	CAPACITOR	10UF-25
C 042	1	21C82372C09	CAPACITOR	.1UF80-20-25
C 043	1	21D82428B62	CAPACITOR	.01UF80-20-200
C 044	1	21D82428B62	CAPACITOR	.01UF80-20-200
C 045	1	21D84494B06	CAPACITOR	120PF-5-500
C 046	1	21D84494B12	CAPACITOR	220PF-5-500
C 046	S01	CM04FD151J03	CAPACITOR	150PF-5-500
C 046	S01	CM04FD181J03	CAPACITOR	180PF-5-500
C 046	S01	CM04FC271J03	CAPACITOR	270PF-5-300
C 047	1	21K865452	CAPACITOR	680PF-10-500
C 048	1	21C82372C09	CAPACITOR	.1UF80-20-25
C 049	1	CV31D350	CAPACITOR	9 TO 35PF-200
C 050	1	21D84426B51	CAPACITOR	3PF-5-500
C 051	1	21C82372C09	CAPACITOR	.1UF80-20-25
C 052	1	UK16-104	CAPACITOR	.1UF-20
C 053	1	21C82372C09	CAPACITOR	.1UF80-20-25
C 054	1	UK16-104	CAPACITOR	.1UF-20
C 055	1	21D82428B62	CAPACITOR	.01UF80-20-200
C 056	1	21C82372C09	CAPACITOR	.1UF80-20-25
C 059	1	21C82372C09	CAPACITOR	.1UF80-20-25
C 060	1	21D82428B62	CAPACITOR	.01UF80-20-200
C 061	1	21D82428B62	CAPACITOR	.01UF80-20-200
C 062	1	21D82428B62	CAPACITOR	.01UF80-20-200
C 063	1	21D82187B06	CAPACITOR	560PF-10-500
C 064	1	21D82428B10	CAPACITOR	3300PF-10-100
C 065	1	21C82372C09	CAPACITOR	.1UF80-20-25
C 066	1	21C82372C09	CAPACITOR	.1UF80-20-25
C 067	1	M39014/02-1350	CAPACITOR	.1UF-10-100
C 068	1	21D82187B14	CAPACITOR	1000PF-10-100
C 069	1	M39014/02-1342	CAPACITOR	.022UF-10-100
C 070	1	21D82187B14	CAPACITOR	1000PF-10-100
C 071	1	21D82187B06	CAPACITOR	560PF-10-500
C 072	1	21D84494B46	CAPACITOR	180PF-3-500
C 073	1	21D84426B21	CAPACITOR	80PF-5-500
C 074	1	21C82372C09	CAPACITOR	.1UF80-20-25
C 075	1	21C82372C09	CAPACITOR	.1UF80-20-25
C 076	1	21C82372C09	CAPACITOR	.1UF80-20-25
C 077	1	23D84665F01	CAPACITOR	10UF-25V
C 078	1	23D84665F01	CAPACITOR	10UF-25V
C 079	1	23D84665F01	CAPACITOR	10UF-25V
C 080	1	23D84665F01	CAPACITOR	10UF-25V
C 081	1	21C82372C09	CAPACITOR	.1UF80-20-25
C 082	1	21C82372C09	CAPACITOR	.1UF80-20-25
C 083	1	CV31D350	CAPACITOR	9 TO 35PF-200
C 084	1	21D82428B62	CAPACITOR	.01UF80-20-200
C 085	1	21C82372C09	CAPACITOR	.1UF80-20-25
C 086	1	21C82372C09	CAPACITOR	.1UF80-20-25
C 087	1	21C82372C09	CAPACITOR	.1UF80-20-25
C 088	1	CV31D350	CAPACITOR	9 TO 35PF-200
C 089	1	21D82428B62	CAPACITOR	.01UF80-20-200 A4
C 090	1	21D82428B62	CAPACITOR	.01UF80-20-200
C 091	1	21C82372C09	CAPACITOR	.1UF80-20-25
C 092	1	21C82372C09	CAPACITOR	.1UF80-20-25
C 093	1	21C82372C09	CAPACITOR	.1UF80-20-25
C 094	1	21C82372C09	CAPACITOR	.1UF80-20-25
C 095	1	21C82372C09	CAPACITOR	.1UF80-20-25
C 096	1	CV31D350	CAPACITOR	9 TO 35PF-200
C 097	1	21D82428B10	CAPACITOR	3300PF-10-100
C 098	1	21D82187B14	CAPACITOR	1000PF-10-100
C 099	1	21C82372C09	CAPACITOR	.1UF80-20-25
C 100	1	21C82372C09	CAPACITOR	.1UF80-20-25
C 101	1	23D82601A19	CAPACITOR	100UF-25WVDC
C 102	1	21C82372C10	CAPACITOR	.05UF-20-25
C 103	1	23D84665F01	CAPACITOR	10UF-25V
C 104	1	21D82428B62	CAPACITOR	.01UF80-20-200
C 105	1	21D82428B62	CAPACITOR	.01UF80-20-200
C 106	1	21C82372C09	CAPACITOR	.1UF80-20-25
C 107	1	21C82372C09	CAPACITOR	.1UF80-20-25
C 108	1	21D82428B62	CAPACITOR	.01UF80-20-200
C 109	1	21D82428B36	CAPACITOR	2000PF-10-200
C 110	1	21C82372C09	CAPACITOR	.1UF80-20-25
C 111	1	21C82372C09	CAPACITOR	.1UF80-20-25
C 112	1	21D84494B16	CAPACITOR	330PF-5-500
C 113	1	21C82372C09	CAPACITOR	.1UF80-20-25
C 114	1	21C82372C09	CAPACITOR	.1UF80-20-25
C 115	1	21C82372C09	CAPACITOR	.1UF80-20-25
C 116	1	21D82428B62	CAPACITOR	.01UF80-20-200
C 117	1	21D82428B62	CAPACITOR	.01UF80-20-200
C 118	1	21C82372C10	CAPACITOR	.05UF-20-25
C 119	1	21D82428B62	CAPACITOR	.01UF80-20-200
C 120	1	23D84665F01	CAPACITOR	10UF-25V
C 121	1	21C82372C09	CAPACITOR	.1UF80-20-25
C 122	1	23D84665F01	CAPACITOR	10UF-25V
C 123	1	23D84665F01	CAPACITOR	10UF-25V
C 124	1	23D84665F01	CAPACITOR	10UF-25V
C 125	1	23D84665F01	CAPACITOR	10UF-25V
C 126	1	23D84665F01	CAPACITOR	10UF-25V
C 127	1	23D84665F01	CAPACITOR	10UF-25V
C 128	1	23D84665F01	CAPACITOR	10UF-25V
C 129	1	21D82428B62	CAPACITOR	.01UF80-20-200
C 130	1	21D82428B62	CAPACITOR	.01UF80-20-200
CR001	1	48D84616A01	DIODE	
CR002	1	48D84616A01	DIODE	
CR003	1	48-84463K02	DIODE	
CR004	S01	48-80345A71	DIODE,VARACTOR	
CR005	1	48-83192A09	DIODE	
CR006	1	48-83192A09	DIODE	
CR007	S01	48-80345A71	DIODE,VARACTOR	
CR008	1	48-84463K02	DIODE	
CR009	1	48-80345A75	DIODE,VARACTOR	
CR012	1	48-84463K02	DIODE	
CR013	1	48-84463K02	DIODE	
FL001	1	48-80346A09	FILTER	
FL002	1	48-80346A09	FILTER	
L 001	1	MS75084-13	COIL	12UH
L 002	1	MS18130-12	COIL	2.2UH
L 003	1	MS90541-03	COIL	4700UH
L 004	1	MS90539-09	COIL	560UH
L 005	1	MS90539-07	COIL	470UH
L 006	1	MS90540-08	COIL	2200UH
L 007	1	MS90539-11	COIL	680UH
L 008	1	MS90539-11	COIL	680UH
L 009	1	MS90539-15	COIL	1000UH
L 010	1	MS18130-8	COIL	1UH
L 011	1	MS90541-03	COIL	4700UH
L 012	1	MS90539-15	COIL	1000UH
L 013	1	MS90541-03	COIL	4700UH
L 014	1	MS90539-15	COIL	1000UH
L 015	1	MS90541-03	COIL	4700UH
L 016	1	MS90539-15	COIL	1000UH
L 018	1	MS90539-15	COIL	1000UH
L 019	1	MS90539-15	COIL	1000UH
L 020	1	MS90539-15	COIL	1000UH
L 021	1	MS90539-07	COIL	470UH
L 022	1	MS90539-07	COIL	470UH
Q 001	1	48-80345A42	TRANSISTOR	
Q 002	1	48-80345A42	TRANSISTOR	
Q 003	1	48-80345A42	TRANSISTOR	
Q 004	1	48-80345A42	TRANSISTOR	
Q 005	1	48R00869570	TRANSISTOR	
Q 006	1	48R00869571	TRANSISTOR	
Q 007	1	48R00869570	TRANSISTOR	
Q 008	1	48R00869570	TRANSISTOR	
Q 009	1	48R00869570	TRANSISTOR	
Q 010	1	48R00869571	TRANSISTOR	
Q 011	1	48R00869571	TRANSISTOR	
Q 012	1	48R00869571	TRANSISTOR	
Q 013	1	48R00869570	TRANSISTOR	
Q 014	1	48R00869571	TRANSISTOR	
Q 015	1	48R00869571	TRANSISTOR	
Q 016	1	48-83827D31	TRANSISTOR	
Q 017	1	48R00869570	TRANSISTOR	
Q 018	1	48R00869570	TRANSISTOR	
Q 019	1	48R00869571	TRANSISTOR	
Q 020	1	48-84302A36	TRANSISTOR	
Q 021	1	48R00869570	TRANSISTOR	
Q 022	1	48R00869571	TRANSISTOR	
R 001	1	6S124A25	RESISTOR	100-5-1/4
R 002	1	6S124B22	RESISTOR	1M-5-1/4
R 003	1	6S124A89	RESISTOR	47K-5-1/4
R 004	1	6S124B10	RESISTOR	330K-5-1/4
R 005	1	6S124A79	RESISTOR	18K-5-1/4
R 006	1	6S124A53	RESISTOR	1.5K-5-1/4
R 007	1	6S124A25	RESISTOR	100-5-1/4
R 008	1	6S124A69	RESISTOR	6.8K-5-1/4
R 009	1	6S124A56	RESISTOR	2.0K-5-1/4
R 010	1	6S124A73	RESISTOR	10K-5-1/4
R 011	1	6S124A67	RESISTOR	5.6K-5-1/4
R 012	1	6S124A25	RESISTOR	100-5-1/4
R 013	1	6S124A85	RESISTOR	33K-5-1/4
R 014	1	6S124A73	RESISTOR	10K-5-1/4
R 015	1	6S124A73	RESISTOR	10K-5-1/4
R 016	1	6S124A75	RESISTOR	12K-5-1/4
R 017	1	6S124A25	RESISTOR	100-5-1/4
R 018	1	6S124A85	RESISTOR	33K-5-1/4
R 019	1	6S124A73	RESISTOR	10K-5-1/4
R 020	1	6S124A49	RESISTOR	1K-5-1/4
R 022	1	6S124A25	RESISTOR	100-5-1/4
R 023	1	6S124A81	RESISTOR	22K-5-1/4
R 024	1	6S124A77	RESISTOR	15K-5-1/4
R 025	1	6S124A45	RESISTOR	680-5-1/4
R 026	1	6S124A65	RESISTOR	4.7K-5-1/4
R 027	1	6S124A37	RESISTOR	330-5-1/4
R 029	1	6S124A73	RESISTOR	10K-5-1/4
R 030	1	6S124A62	RESISTOR	3.6K-5-1/4
R 031	1	6S124A25	RESISTOR	100-5-1/4
R 033	1	06-10621D48	RESISTOR	38.3K-1-1/8
R 034	1	06-10621D48	RESISTOR	38.3K-1-1/8
R 035	1	06-10621E05	RESISTOR	147K-1-1/8
R 036	1	06-10621D88	RESISTOR	100K-1-1/8
R 037	1	6S124A97	RESISTOR	100K-5-1/4
R 038	1	06-10621D88	RESISTOR	100K-1-1/8
R 039	1	06-10621D48	RESISTOR	38.3K-1-1/8
R 040	1	06-10621D48	RESISTOR	38.3K-1-1/8
R 041	1	06-10621E17	RESISTOR	196K-1-1/8
R 042	1	06-10621C53	RESISTOR	4020-1-1/8
R 043	1	6S124B02	RESISTOR	150K-5-1/4
R 044	1	6S124A73	RESISTOR	10K-5-1/4
R 045	1	6S124A57	RESISTOR	2.2K-5-1/4
R 046	1	6S124A73	RESISTOR	10K-5-1/4
R 047	1	6S124A73	RESISTOR	10K-5-1/4
R 048	1	6S124A85	RESISTOR	33K-5-1/4
R 049	1	6S124A73	RESISTOR	10K-5-1/4
R 050	1	6S124A97	RESISTOR	100K-5-1/4
R 051	1	6S124A41	RESISTOR	470-5-1/4
R 052	1	6S124A65	RESISTOR	4.7K-5-1/4
R 053	1	6S124A73	RESISTOR	10K-5-1/4
R 054	1	6S124A17	RESISTOR	47-5-1/4
R 055	1	6S124A33	RESISTOR	220-5-1/4
R 056	1	6S124A80	RESISTOR	20K-5-1/4
R 057	1	18D83452F15	RESISTOR,VARIABLE	20K
R 058	1	6S124A73	RESISTOR	10K-5-1/4
R 059	1	6S124A73	RESISTOR	10K-5-1/4
R 060	1	18D83452F14	RESISTOR,VARIABLE	10K
R 061	1	6S124A89	RESISTOR	47K-5-1/4
R 062	1	6S124A89	RESISTOR	47K-5-1/4
R 065	1	6S124A73	RESISTOR	10K-5-1/4
R 067	1	6S124A65	RESISTOR	4.7K-5-1/4
R 068	1	18D83452F14	RESISTOR,VARIABLE	10K
R 069	1	6S124A58	RESISTOR	2.4K-5-1/4
R 070	1	18D83452F12	RESISTOR,VARIABLE	5K
R 071	1	6S124A37	RESISTOR	330-5-1/4
R 072	1	6S124A66	RESISTOR	5.1K-5-1/4
R 073	1	06-10621D48	RESISTOR	38.3K-1-1/8
R 074	1	06-10621D32	RESISTOR	26.1K-1-1/8 NOMINAL
R 074	S01	06-10621D24	RESISTOR	21.5K-1-1/8
R 074	S01	06-10621D36	RESISTOR	28.7K-1-1/8
R 075	1	06-10621D40	RESISTOR	31.6K-1-1/8
R 076	1	6S124A66	RESISTOR	5.1K-5-1/4
R 077	1	6S124A66	RESISTOR	5.1K-5-1/4
R 079	1	06D83175C83	RESISTOR	5.11K-1-1/4
R 080	1	06D83175C83	RESISTOR	5.11K-1-1/4
R 081	1	06-10621D88	RESISTOR	100K-1-1/8
R 082	1	06D83175C05	RESISTOR	11K-1-1/4
R 083	1	6S124A59	RESISTOR	2.7K-5-1/4
R 084	1	6S124A75	RESISTOR	12K-5-1/4
R 085	1	6S124A77	RESISTOR	15K-5-1/4
R 086	1	6S124A41	RESISTOR	470-5-1/4
R 087	1	6S124A73	RESISTOR	10K-5-1/4
R 088	1	6S124A73	RESISTOR	10K-5-1/4
R 089	1	6S124A15	RESISTOR	39-5-1/4
R 090	1	6S124A15	RESISTOR	39-5-1/4
R 091	1	18D83452F04	RESISTOR,VARIABLE	100
R 092	1	6S124A25	RESISTOR	100-5-1/4
R 093	1	6S124A73	RESISTOR	10K-5-1/4
R 094	1	6S124A59	RESISTOR	2.7K-5-1/4
R 095	1	6S124A59	RESISTOR	2.7K-5-1/4
R 096	1	6S124A73	RESISTOR	10K-5-1/4
R 097	1	6S124A73	RESISTOR	10K-5-1/4
R 098	1	6S124A15	RESISTOR	39-5-1/4
R 099	1	6S124A15	RESISTOR	39-5-1/4
R 100	1	18D83452F04	RESISTOR,VARIABLE	100
R 101	1	6S124A25	RESISTOR	100-5-1/4
R 102	1	6S124B06	RESISTOR	220K-5-1/4
R 103	1	6S124A97	RESISTOR	100K-5-1/4
R 104	1	6S124A91	RESISTOR	56K-5-1/4
R 105	1	6S124A01	RESISTOR	10-5-1/4
R 106	1	6S124A73	RESISTOR	10K-5-1/4
R 107	1	6S124A73	RESISTOR	10K-5-1/4
R 108	1	6S124A57	RESISTOR	2.2K-5-1/4
R 109	1	6S124A49	RESISTOR	1K-5-1/4
R 110	1	6S124A61	RESISTOR	3.3K-5-1/4
R 111	1	6S124A71	RESISTOR	8.2K-5-1/4
R 112	1	6S124A49	RESISTOR	1K-5-1/4
R 113	1	6S124A57	RESISTOR	2.2K-5-1/4
R 114	1	6S124A41	RESISTOR	470-5-1/4
R 115	1	6S124A57	RESISTOR	2.2K-5-1/4
R 116	1	6S124A62	RESISTOR	3.6K-5-1/4
R 117	1	06D83175C03	RESISTOR	10K-1-1/4
R 118	1	6S124A55	RESISTOR	1.8K-5-1/4
R 119	1	18D83452F10	RESISTOR,VARIABLE	1K
R 120	1	06-10621D28	RESISTOR	23.7K-1-1/8 NOMINAL
R 120	S01	06-10621D20	RESISTOR	19.6K-1-1/8
R 120	S01	06-10621D36	RESISTOR	28.7K-1-1/8
R 121	1	18D83452F12	RESISTOR,VARIABLE	5K
R 122	1	6S124A25	RESISTOR	100-5-1/4
R 123	AR		WIRE	24 NOMINAL
R 123	S01	06-10621B94	RESISTOR	1000-1-1/8
R 124	1	18D83452F16	RESISTOR,VARIABLE	20K
R 125	1	18D83452F10	RESISTOR,VARIABLE	1K
R 126	1	6S124A73	RESISTOR	10K-5-1/4
R 127	1	6S124A49	RESISTOR	1K-5-1/4
R 128	1	06-10621D36	RESISTOR	28.7K-1-1/8
R 129	1	6S124A15	RESISTOR	39-5-1/4
R 130	1	6S124A73	RESISTOR	10K-5-1/4
R 131	1	6S124A15	RESISTOR	39-5-1/4
R 132	1	6S124A73	RESISTOR	10K-5-1/4
R 133	1	6S124A73	RESISTOR	10K-5-1/4
R 134	1	6S124A97	RESISTOR	100K-5-1/4
R 135	1	6S124A75	RESISTOR	12K-5-1/4
R 136	1	6S124A59	RESISTOR	2.7K-5-1/4
R 137	1	6S124A59	RESISTOR	2.7K-5-1/4
R 138	1	6S124A70	RESISTOR	7.5K-5-1/4
R 139	1	6S124A70	RESISTOR	7.5K-5-1/4
R 141	1	6S124A83	RESISTOR	27K-5-1/4
R 142	1	6S124A66	RESISTOR	5.1K-5-1/4
R 143	1	6S124A65	RESISTOR	4.7K-5-1/4
R 144	1	6S124A61	RESISTOR	3.3K-5-1/4
R 145	1	6S124A49	RESISTOR	1K-5-1/4
R 146	1	6S124A73	RESISTOR	10K-5-1/4
R 147	1	6S124A97	RESISTOR	100K-5-1/4
R 148	1	6S124A73	RESISTOR	10K-5-1/4
R 149	1	6S124A73	RESISTOR	10K-5-1/4
R 151	1	6S124A41	RESISTOR	470-5-1/4
R 152	1	6S124A73	RESISTOR	10K-5-1/4
R 153	1	6S124A80	RESISTOR	20K-5-1/4
R 154	1	06-10621C79	RESISTOR	7.5K-1-1/8
R 155	1	06-10621C31	RESISTOR	2370-1-1/8
R 156	1	6S124A49	RESISTOR	1K-5-1/4
R 157	1	6S124A61	RESISTOR	3.3K-5-1/4
R 158	1	6S124A73	RESISTOR	10K-5-1/4
R 159	1	6S124A73	RESISTOR	10K-5-1/4
R 160	1	6S124A25	RESISTOR	100-5-1/4
R 161	1	6S124A25	RESISTOR	100-5-1/4
R 162	1	6S124A39	RESISTOR	390-5-1/4
R 163	1	6S124A25	RESISTOR	100-5-1/4
R 164	1	6S124A25	RESISTOR	100-5-1/4
R 165	1	6S124A51	RESISTOR	1.2K-5-1/4
R 166	1	6S124A61	RESISTOR	3.3K-5-1/4
R 167	1	6S185A97	RESISTOR	100K-5-1/8
R 168	1	6S185A59	RESISTOR	2.7K-5-1/8
R 169	1	6S185A59	RESISTOR	2.7K-5-1/8
R 170	1	6S124A37	RESISTOR	330-5-1/4
R 171	1	6S124A37	RESISTOR	330-5-1/4
U 001	1	51-84887K73	INTEGRATED CIRCUIT	
U 002	1	51-84887K73	INTEGRATED CIRCUIT	
U 003	1	51R84887K09	INTEGRATED CIRCUIT	
U 004	1	51-84887K73	INTEGRATED CIRCUIT	
U 005	1	51-84887K73	INTEGRATED CIRCUIT	
U 006	1	51-80345A04	INTEGRATED CIRCUIT	
U 007	1	51-84887K73	INTEGRATED CIRCUIT	
U 008	1	HI-201-5	INTEGRATED CIRCUIT	
U 009	1	51-80345A04	INTEGRATED CIRCUIT	
U 010	1	51-80345A02	INTEGRATED CIRCUIT	
U 011	1	51-80345A10	INTEGRATED CIRCUIT	
U 012	1	51-80345A04	INTEGRATED CIRCUIT	
U 013	1	51-84887K54	INTEGRATED CIRCUIT	
U 014	1	51-84118K01	INTEGRATED CIRCUIT	
U 015	1	51-84887K73	INTEGRATED CIRCUIT	
U 016	1	51-80345A04	INTEGRATED CIRCUIT	
U 017	1	51-80345A23	INTEGRATED CIRCUIT	
U 018	1	51-80345A23	INTEGRATED CIRCUIT	
U 019	1	51-84928F02	INTEGRATED CIRCUIT	
U 020	1	51-80345A09	INTEGRATED CIRCUIT	
U 021	1	51R84320A80	INTEGRATED CIRCUIT	
U 022	1	51R84320A80	INTEGRATED CIRCUIT	
U 023	1	51-84887K10	INTEGRATED CIRCUIT	
U 024	1	51-84887K10	INTEGRATED CIRCUIT	
U 026	1	51-80345A97	AMPLIFIER	
U 027	1	51-80345A04	INTEGRATED CIRCUIT	
U 028	1	51-80345A18	INTEGRATED CIRCUIT	
VR010	1	48-82556C15A	DIODE, ZENER	5.1V-5-.4
VR011	1	48-80345A94A	DIODE,ZENER	10V-5-.4
VR014	1	48-84302A09	DIODE,ZENER	6.2V-5-.4
VR015	1	48-82556C15A	DIODE,ZENER	5.1V-5-.4

ASSEMBLY PARTS LIST
Receiver

SECTION 11

RF SYNTHESIZER (A5)

11-1. General. The RF Synthesizer provides an RF signal source for the frequency range from 10kHzto1 GHz in 100 Hz steps. The output frequency is programmed by the processor through the RF control bus and is phase locked to the 10 MHz frequency standard. A reference divider in the module produces outputs of 500 kHz, 50 kHz, 5 kHz, 1 kHz, 100 Hz, and 50 Hz (SYNTH SWP SYNC) each having the same accuracy as the frequency standard. A block diagram of the RF Synthesizer is shown in figure 11-1 and its schematic is shown in figure 11-3.

11 -2. Frequency Synthesis Scheme. Four phase locked loops are used to generate the output frequency; a 60.5 MHz loop, a 310-440 MHz loop, the 500 MHz-1000 MHz loop, and the 550 MHz loop. Two of these loops contain programmable dividers, controlled by the microprocessor for varying the frequency. The 310-440 MHz loop is controlled by the four most significant digits of the required frequency and operates in discrete 50 kHz increments. The 60.5 MHz loop is control led by the three least significant digits of the required frequency and operates in discrete 50 Hz increments.

11-3. The output is derived from three sources, covering the ranges of 10 kHz to 250 MHz, 250 MHz to 500 MHz, and 500 MHz to 1000 MHz. In the first range, 10 kHz to 250 MHz, the output is derived by mixing the fixed 550 MHz signal with 500-1000 MHz signal programmed for frequencies from 550.01 MHz to 800 MHz. For the second range, 250 to 500 MHz, the output is a divide by two of the 500-1000 MHz signal. The final range is the 500-1000 MHz signal directly. The appropriate frequency source is switched to the SYNTH RF output by the Output Select switch.

11-4. A basic flow diagram for programming the RF Synthesizer is shown in figure 11-2. This diagram includes generate and monitor considerations, wideband amplifier control, and modulation control.

11-5. 310-440 MHz Phase Locked Loop. A single 310-440 MHz VCO is phase locked to the 100 kHz reference input using a straight forward loop. The VCO output is divided down to 50 kHz using a programmable two modulus prescalerand divider. Programming of the divider is controlled by the processor to give output frequencies from 310 to 440 MHz in 50 kHz steps.

11-6. 60.5 MHz Phase Locked Loop. The 60.5 MHz loop is programmable over a ±100 kHz range in 50 Hz increments. The 60.5 MHz VCO output is mixed with a 50 MHz signal from the 550 MHz loop. A programmable divider following the mixer divides the 10.5 MHz ± 100 kHz signal down to the 50 Hz reference frequency. A comparison between the divider output and the reference signal by the Phase/Frequency detector results in an error voltage to the VCO which maintains the phase lock.

11-7. 550 MHz Phase Locked Loop. A fixed frequency of 550 MHz is obtained by dividing the 550 MHz VCO by 55 to obtain 10 MHz. The 10 MHz from the divider is compared with the 10 MHz frequency standard in the Phase/Frequency Detector. The resulting error signal is filtered and used to correct the 550 MHz VCO to maintain it in lock.

11-8. A Voltage Controlled Attenuator (VCA) follows the 550 MHz output to level the generator output for frequencies below 1 MHz. The leveling loop in the RF Input module provides the ALC VOLT control signal to maintain the required output level at the front panel RF jack. See paragraph 5-31 for a further description of output leveling.

11-9. 500-1000 MHz Phase Locked Loop. The 500-1000 MHz output is locked to either the sum or the difference of the 310-440 MHz and 60.5 MHz loop output frequencies. In the locked condition, mixing the divide by two output of the 500-1000 MHz VCO's with the 310-440 MHz signal gives a difference frequency equal to the 60.5 MHz output. There are two frequencies at the divide by two output, the 310-440 MHz frequency plus or minus the 60.5 frequency, which will mix down to the correct frequency. However, the sense of the loop is inverted for one compared to the other. Thus the phase switch following the Phase/Frequency Detector determines at which frequency the loop will lock.

11-10. Modulation Control. Modulation of the tuning voltage for the 60.5 MHz VCO provides the frequency modulation of the RF output. Since the modulation sensitivity changes by a factor of two when the 250-500 MHz source is selected, the modulation control provides programmable gain control to maintain constant sensitivity at the FM MOD and SWEEP inputs. Additionally, the wideband modulation mode requires a gain of four beyond that for the narrowband mode. Thus under the control of the processor the Modulation Control selects between the SWEEP and FM MOD inputs, provides gains of 1, 2, 4, and 8 for the FM MOD input and gains of 1 and 2 for the SWEEP input. Input modulation sensitivites are 5 kHz/volt and 20 kHz/volt for narrow and wideband FM input and 2 MHz/volt for the sweep input.

11-11. Module Control. Control information is latched in four bit control latches which are loaded by the processor through the RF control bus. The four bit RF ADD BUS 0-3 is decoded by the Address Decoder to determine which Control Latch the four bit RF DATA BUS 0-3 is to be stored. Synchronization of the data transfer is the function of the RF BUS EN line. Two decoded address outputs, RF LATCH 13 and 14, select latches on the receiver module for receiver control. One control latch output, LO/HI BAND SEL, goes to the RF Input module to control the frequency range of the output amplifer.

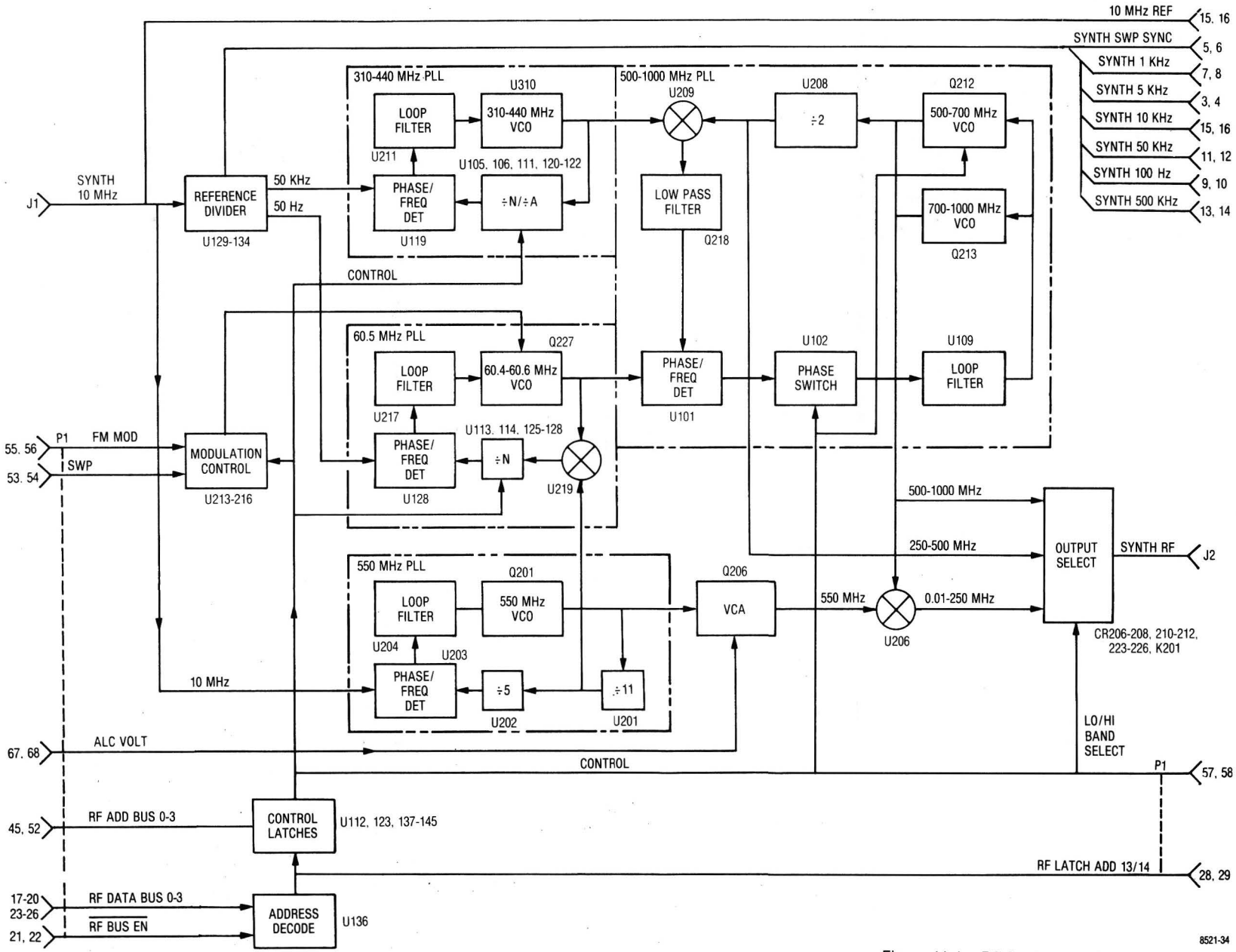

Figure 11-1. RF Synthesizer A5 Block Diagram

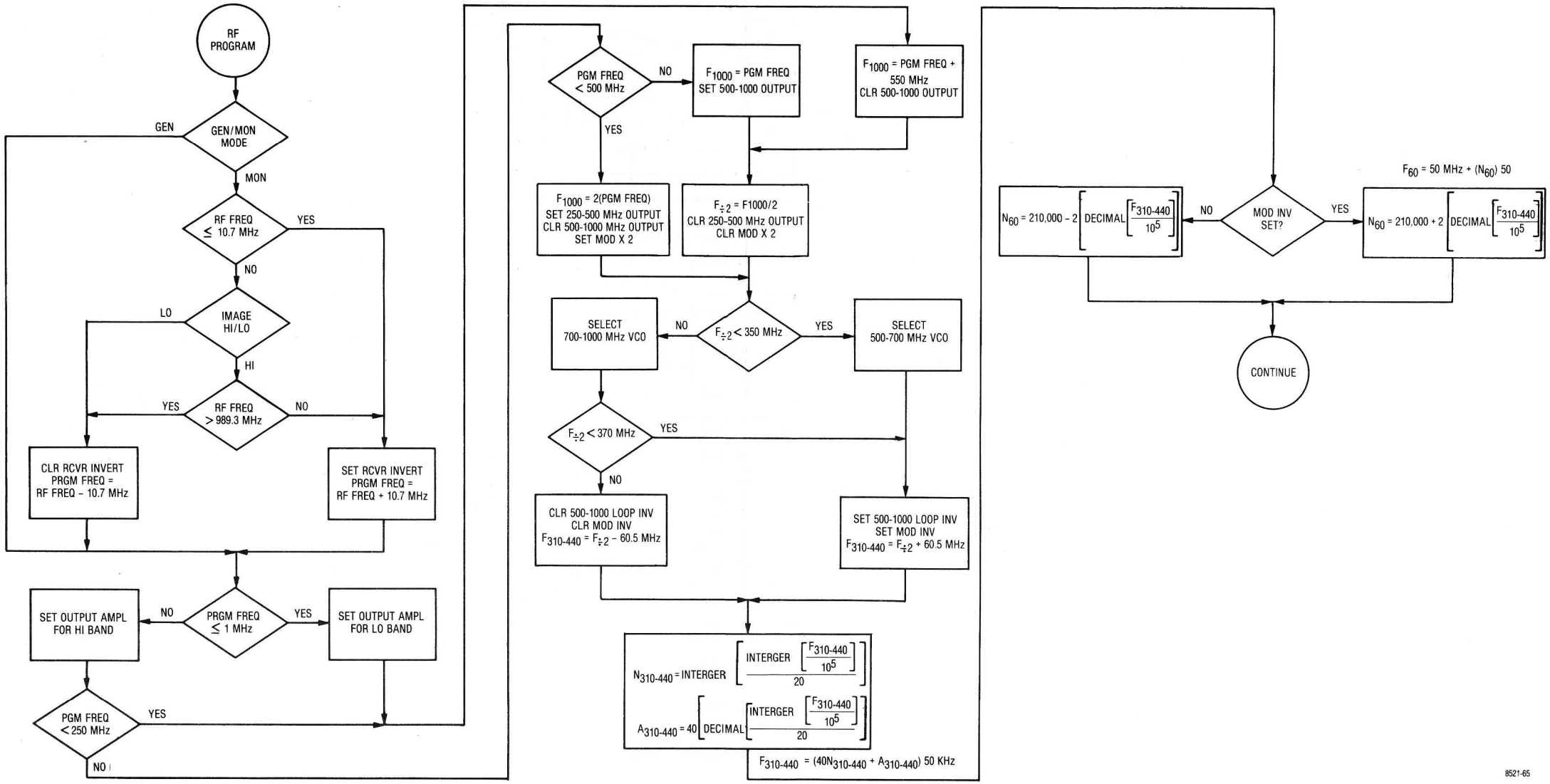

Figure 11-2. Frequency Programming Flow Diagram

NOTES:

1. ALL FEED THRU CAPACITORS ARE 5000 PF
2. FOR REFERENCE DRAWINGS REFER TO: 01-P00385N ASSEMBLY

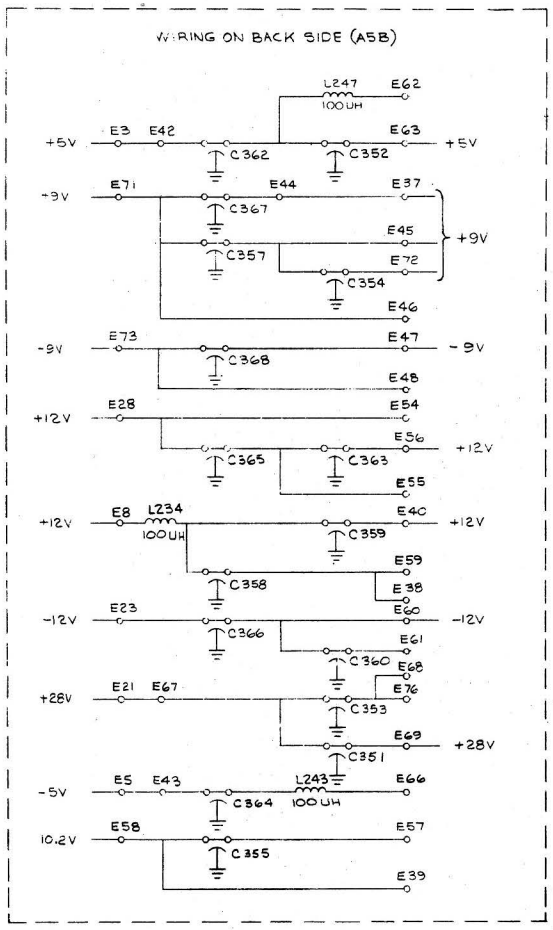

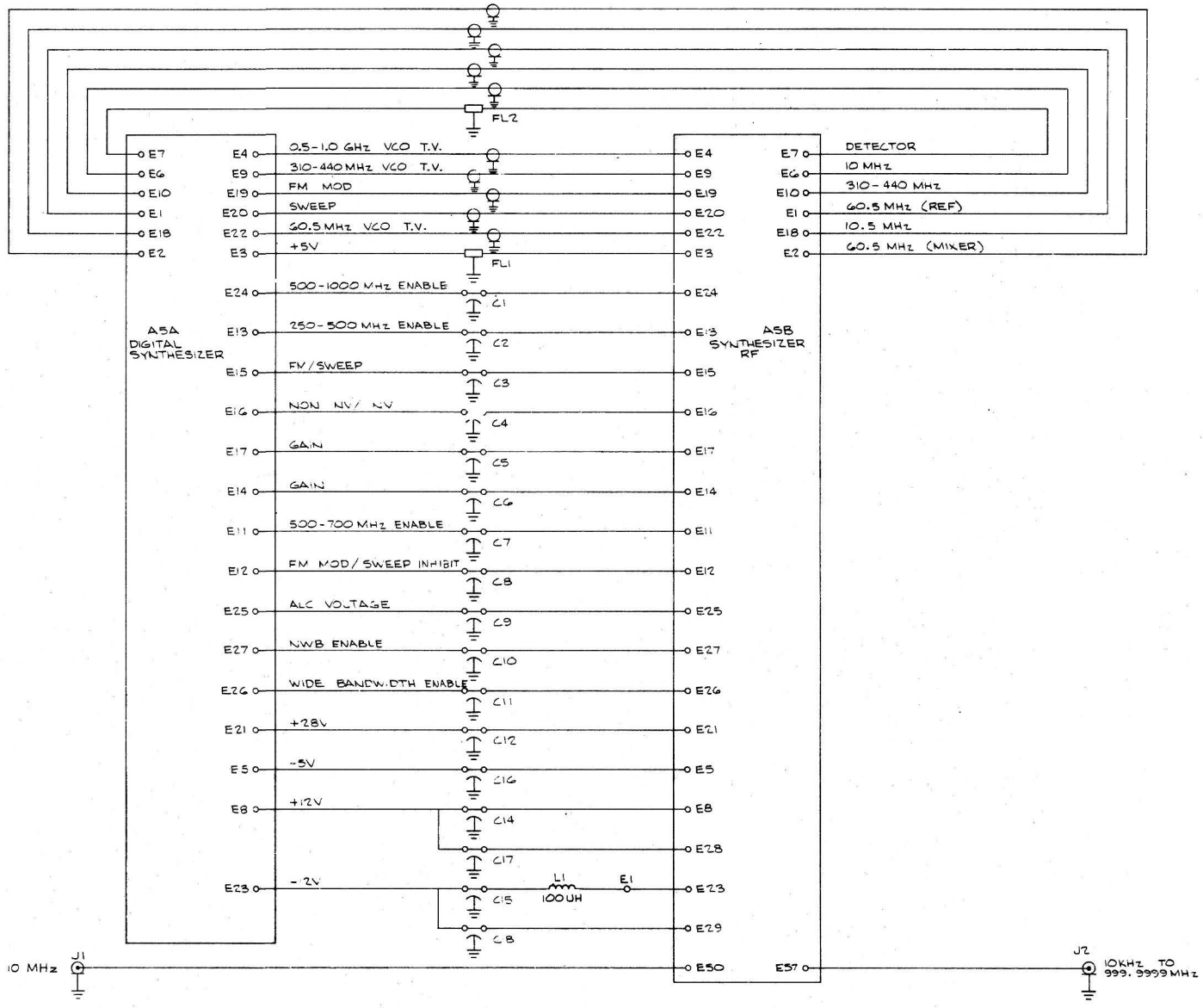

Figure 11-3. RF Synthesizer A5 Schematic Diagram (RTC-1001A)

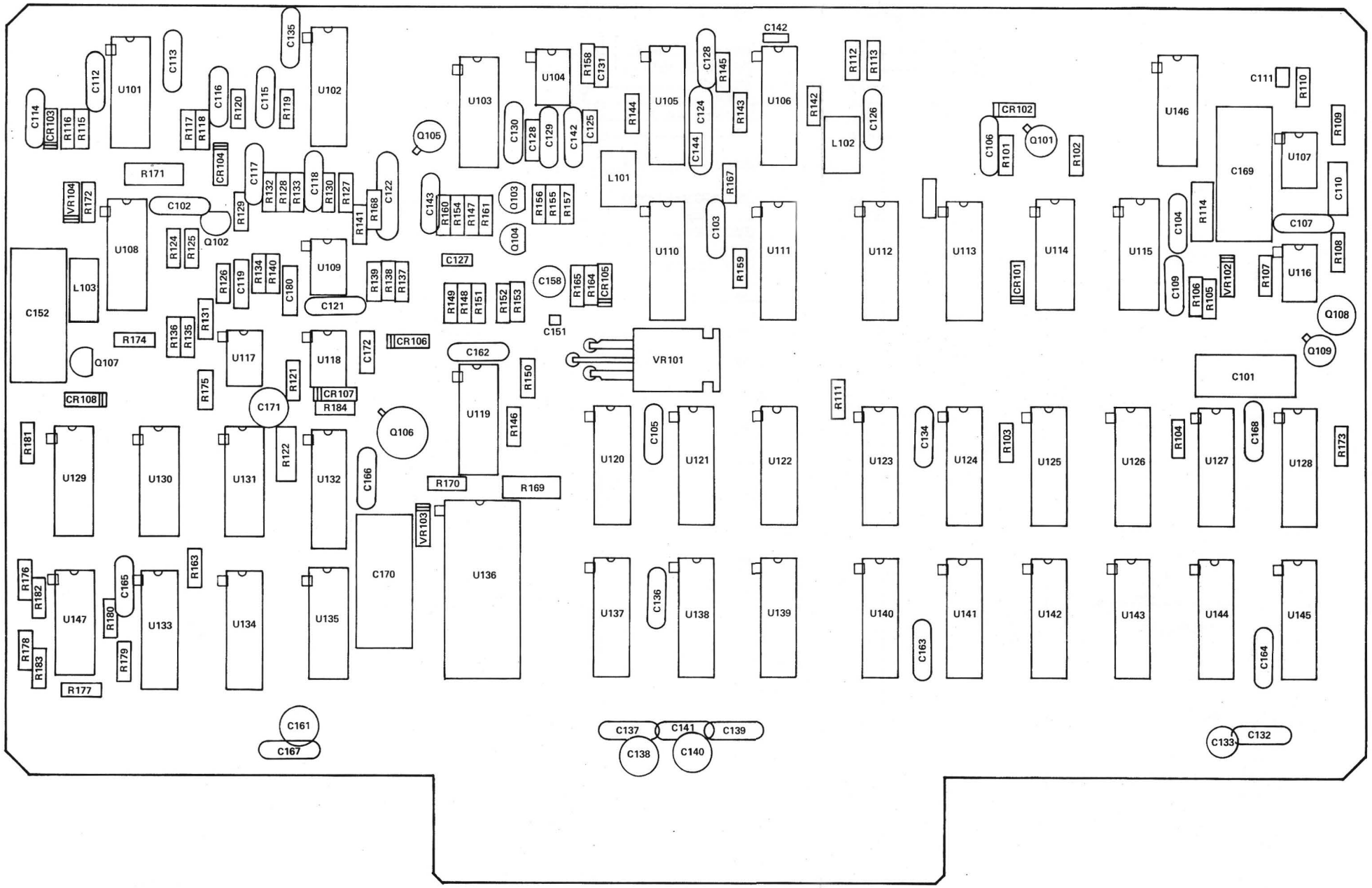

Figure 11-7. Digital Synthesizer A5A1
Parts Location

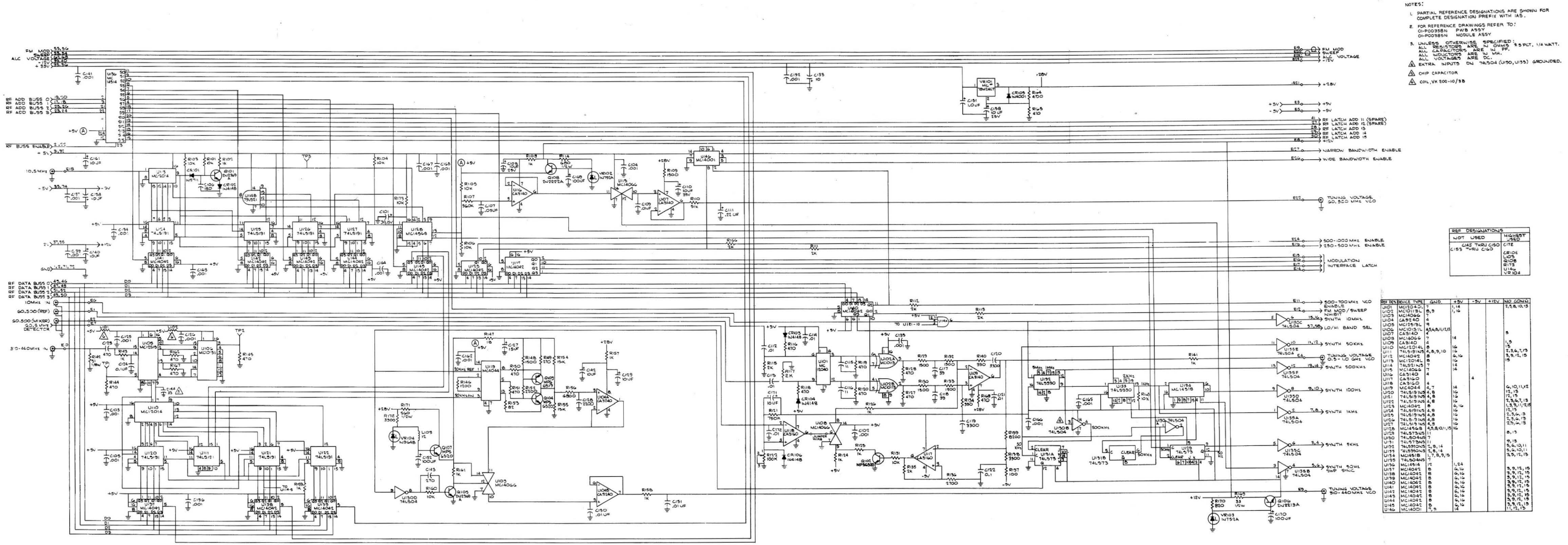

Figure 11-4. Digital Synthesizer Card A5A1
Schematic Diagram
(RTC-4009A)

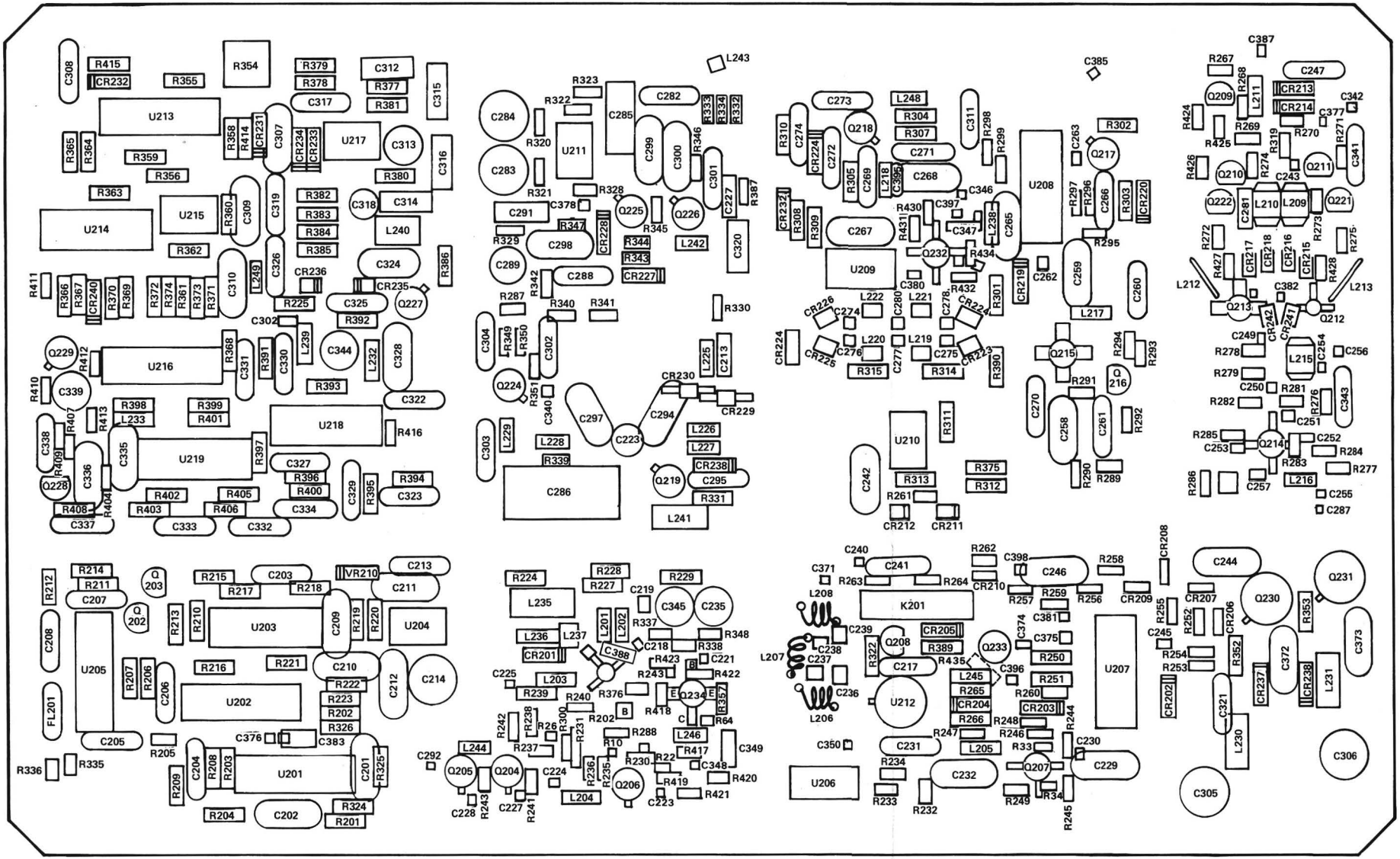

Figure 11-8. RF Synthesizer A5A2
Parts Location

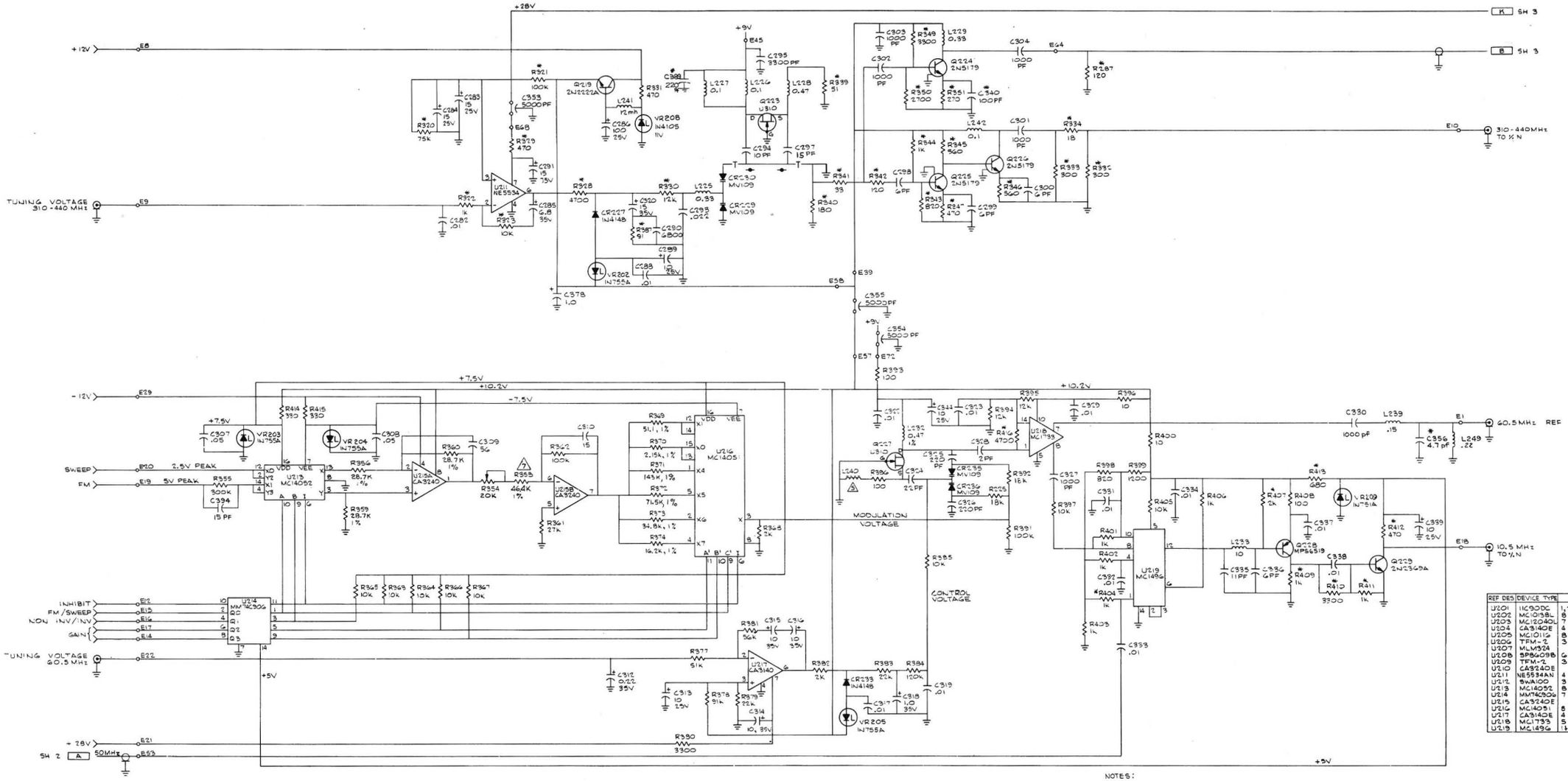

REF DESIGNATIONS	
NOT USED	HIGHEST USED
CR213,228,231,232, CR234,237 THRU 240	C397 CR242
L212,223	FL201 K201 L249
R226,280,316,317, R318,388,506	Q233 R435
	T202 U219 VR210

REF DES	DEVICE TYPE	GND	+5V	-5V	+12V	-12V	NO CONNECTION
U201	11C90DC	1,2,3,12, 4	4,5				6,7,10,11,13
U202	MC10138L	8	1,16				4,5,6,9,10,11,12,13,14,15
U203	MC12040L	7	14				2,4,5,8,10,11,13
U204	CA3140E	4					1,5,8
U205	MC10116	8	1,16				14,15
U206	TFM-2	3					
U207	MLM324		4	11			1,2,3,5,6,8,9,12,13
U208	SP8409B	6					
U209	TFM-2	3					
U210	CA3240E				8	4	
U211	NE5534AN	4					1,5,8
U212	SWA100	3					
U213	MC14052	8					1,5,11,15
U214	MM74C906	7	14				12,13
U215	CA3240E				4		
U216	MC14051	8					
U217	CA3140E	4					1,5,8
U218	MC1733	5					2,3,4,6,9,11,12,13
U219	MC1496G	4					7,9,11,13

NOTES:

1. PARTIAL REFERENCE DESIGNATIONS ARE SHOWN. FOR COMPLETE DESIGNATIONS PREFIX WITH 1A5.
2. FOR REFERENCE DRAWINGS REFER TO:
   01-P00385N MODULE ASSY
   01-P00386N PWB ASSY
3. UNLESS OTHERWISE SPECIFIED:
   ALL RESISTORS ARE IN OHMS ±5 PCT, 1/4W.
   ALL CAPACITORS ARE IN UF.
   ALL INDUCTORS ARE IN UH.
   ALL VOLTAGES ARE DC.
4. * MEANS 1/8W OR CHIP CAP.

△5 24C8396180I

△6 SELECT IN TEST

△7 NOMINAL VALUE SHOWN SELECT IN TEST.

Figure 11-5. RF Synthesizer Card A5A2 Schematic Diagram (Sheet 1 of 3) (RTC-4010A)

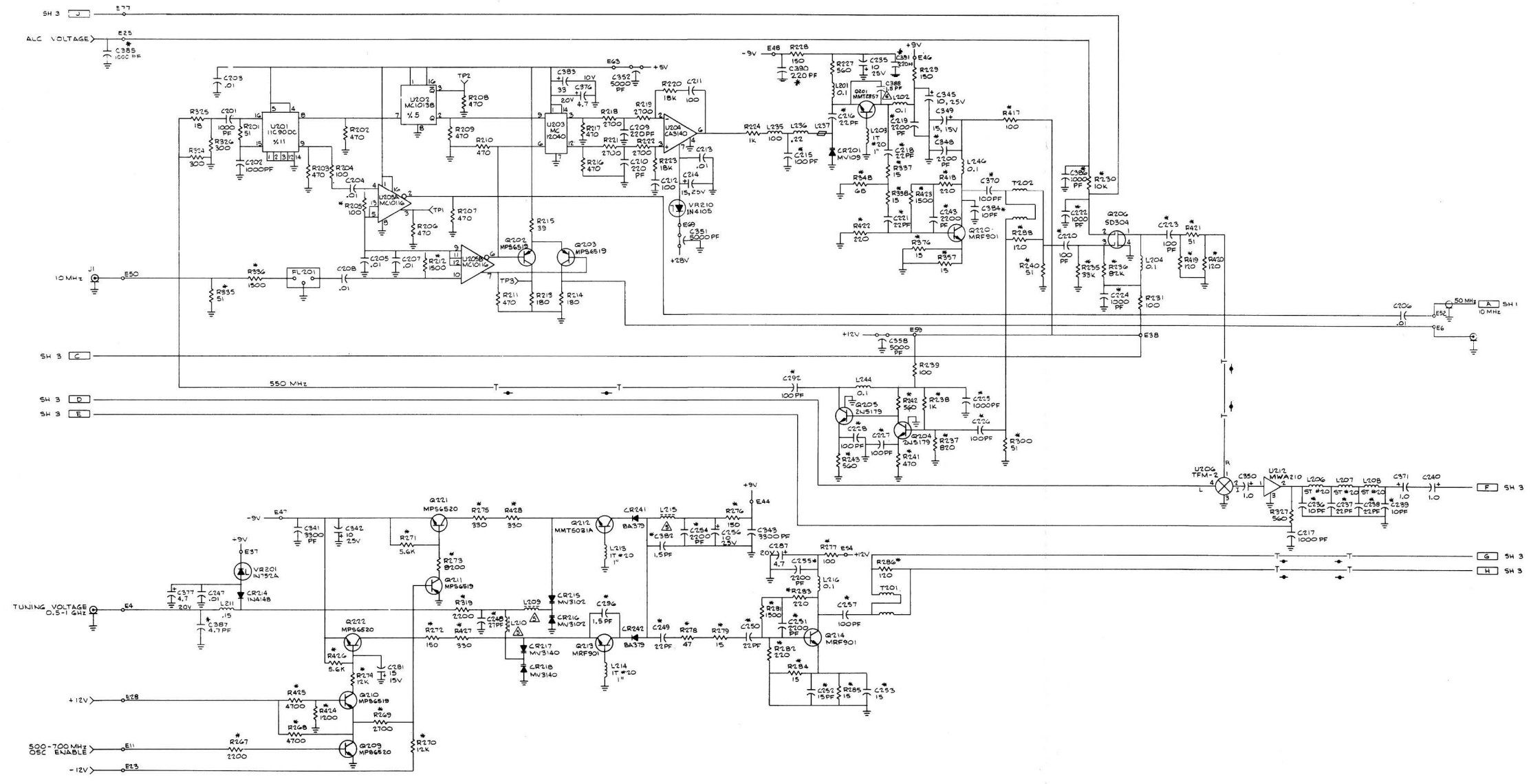

Figure 11-5. RF Synthesizer Card A5A2
Schematic Diagram (Sheet 2 of 3)
(RTC-4010A)

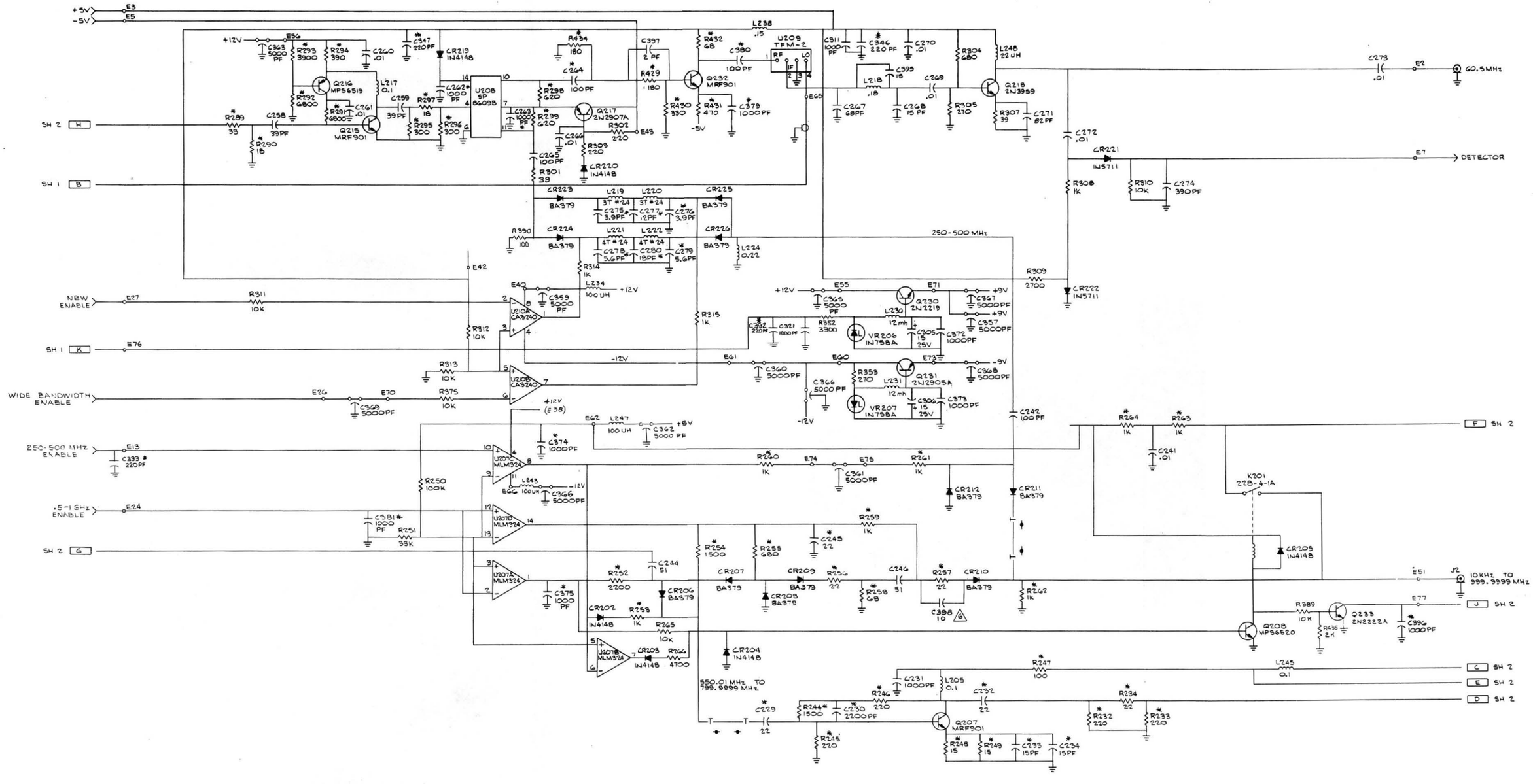

Figure 11-5. RF Synthesizer Card A5A2 Schematic Diagram (Sheet 3 of 3) (RTC-4010A)

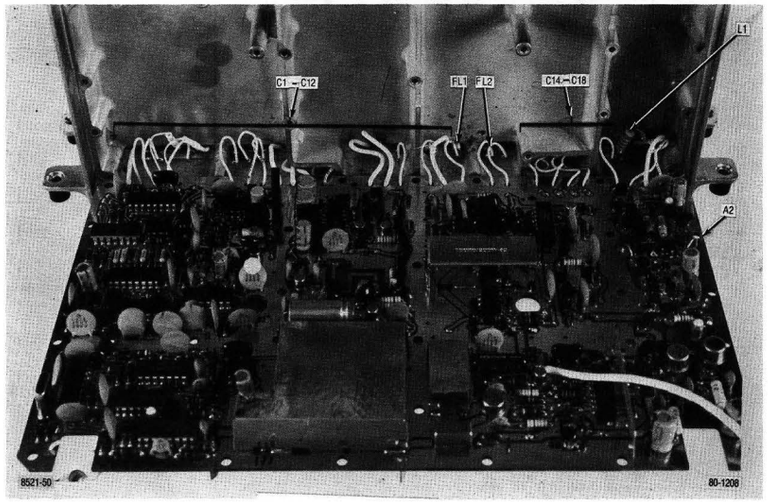

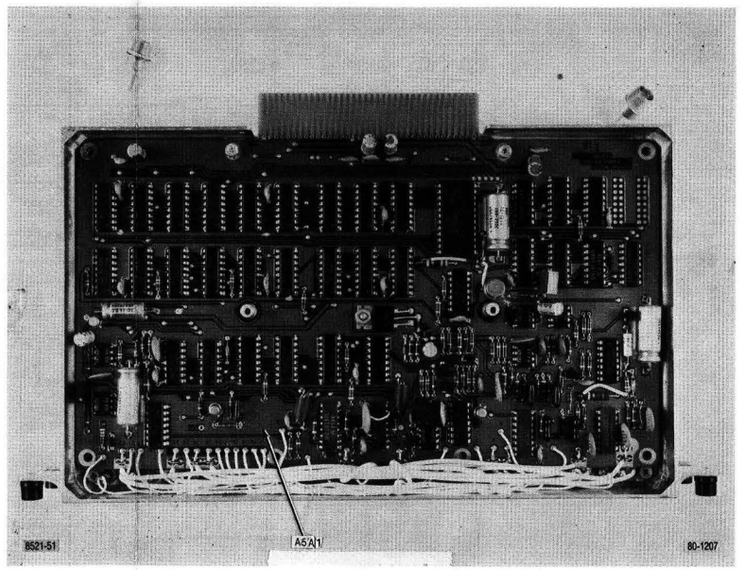

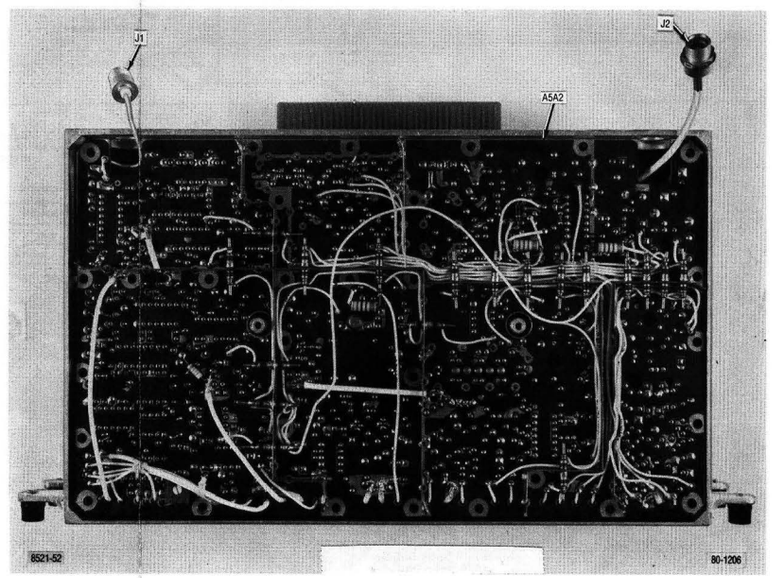

-4. RF Synthesizer Parts Locator

RF Synthesizer Module A5
RTC-1001A

Find No.	Qty. Req.	Part No.	Nomenclature	Part Value
001	1	27-80335A34	CHASSIS, SYNTHESIZERA	
002	1	15-80335A37	COVER,DIGITAL SYNTHES	RECIEVER
003	4	5C84500B03	EYELET	
004	4	42C84284B01	RETAINER	
005	28	3-134212	SCREW,THD FORMING	4-40X.312
006	AR		WIRE	24 WHT
008	AR	SN63WRMAP3	SOLDER	
009	AR	11-14167A01	INK	BLACK
010	1	15-80335A36	COVER,RF SYNTHESIZER	
011	1	26-P00211N001	SHIELD	
012	1	64-P00230N001	PLATE, CONNECTOR	
013	4	MS35206-214	SCREW,PH	4-40X.312
014	38	MS35338-40	WASHER,LOCK	NO.4
015	19	9724-SS-0440	SPACER,M/F 4-40	MOD.A-1/4
016	AR	30-84421F13	CABLE,RF4	WHITE
017	19	MS35206-213	SCREW,PH	4-40X.250
018	AR	30-15068A34	CABLE,RF	WHITE
019	AR	30-15068A29	CABLE,RF,SGLE SHLD	WHITE
020	7	03-134169	SCREW,THD FORMING	4-40X.250
021	1	29-14070A91	TERMINAL	
022	AR		WIRE	24
A 001	1	RTC-4009A	DIGITAL SYNTHESIZER A	
A 002	1	RTC-4010A	RF SYNTHESIZER ASSY A	
C 001	1	21C82543H03	CAPACITOR	5000PF80-20-500
C 002	1	21C82543H03	CAPACITOR	5000PF80-20-500
C 003	1	21C82543H03	CAPACITOR	5000PF80-20-500
C 004	1	21C82543H03	CAPACITOR	5000PF80-20-500
C 005	1	21C82543H03	CAPACITOR	5000PF80-20-500
C 006	1	21C82543H03	CAPACITOR	5000PF80-20-500
C 007	1	21C82543H03	CAPACITOR	5000PF80-20-500
C 008	1	21C82543H03	CAPACITOR	5000PF80-20-500
C 009	1	21C82543H03	CAPACITOR	5000PF80-20-500
C 010	1	21C82543H03	CAPACITOR	5000PF80-20-500
C 011	1	21C82543H03	CAPACITOR	5000PF80-20-500
C 012	1	21C82543H03	CAPACITOR	5000PF80-20-500
C 014	1	21C82543H03	CAPACITOR	5000PF80-20-500
C 015	1	21C82543H03	CAPACITOR	5000PF80-20-500
C 016	1	21C82543H03	CAPACITOR	5000PF80-20-500
C 017	1	21C82543H03	CAPACITOR	5000PF80-20-500
C 018	1	21C82543H03	CAPACITOR	5000PF80-20-500
FL001	1	91-80346A11	FILTER,RF-20-500	1250-003
FL002	1	91-80346A11	FILTER,RF	1250-003
J 001	1	5658-5007-00	CONNECTOR,COAX RF	
J 002	1	5634-5015-00	CONNECTOR,RF	
L 001	1	MS90538-12	COIL	100UH

Digital Synthesizer Card A5A1
RTC-4009A

Find No.	Qty. Req.	Part Number	Nomenclature	Part Value
001	1	84-P00359N001	PWB, DIGITAL SYNTHESI	
002	AR	SN63WRMAP3	SOLDER	
003	AR	11-14167A01	INK	BLACK
004	1	MS35206-214	SCREW,PH	4-40X.312
005	2	MS27183-3	WASHER,FLAT	NO.4
006	1	MS35338-40	WASHER,LOCK	NO.4
007	1	MS35649-242	NUT,HEX	4-40
008	AR		INSULATION SLEEVING	22 WHT
009	AR		WIRE	24
C 101	1	TE-1158	CAPACITOR	30UF-1075-16
C 102	1	21D82187B14	CAPACITOR	1000PF-10-100
C 103	1	21D82187B14	CAPACITOR	1000PF-10-100

Find No.	Qty. Req.	Part Number	Nomenclature	Part Value
C 104	1	21D82187B14	CAPACITOR	1000PF-10-100
C 105	1	21D82187B14	CAPACITOR	1000PF-10-100
C 106	1	21D84494B46	CAPACITOR	180PF-3-500
C 107	1	21C82372C10	CAPACITOR	.05UF-20-25
C 108	1	23D84665F01	CAPACITOR	10UF-25V
C 109	1	21D82428B62	CAPACITOR	.01UF80-20-200
C 110	1	MMJ-035-106R-20	CAPACITOR	10UF-20-35
C 111	1	23D82397D50	CAPACITOR	.22UF-20-35
C 112	1	21D82428B62	CAPACITOR	.01UF80-20-200
C 113	1	21D82428B62	CAPACITOR	.01UF80-20-200
C 114	1	21D82428B62	CAPACITOR	.01UF80-20-200
C 115	1	21D84494B37	CAPACITOR	11PF-5-500
C 116	1	21D84494B37	CAPACITOR	11PF-5-500
C 117	1	21D84494B24	CAPACITOR	39PF-5-500
C 118	1	21D84494B24	CAPACITOR	39PF-5-500
C 119	1	21D82428B10	CAPACITOR	3300PF-10-100
C 120	1	21D82428B10	CAPACITOR	3300PF-10-100
C 121	1	21D82428B62	CAPACITOR	.01UF80-20-200
C 122	1	21C82372C09	CAPACITOR	.1UF80-20-25
C 123	1	21D82187B07	CAPACITOR	470PF-10-500
C 124	1	21C82372C09	CAPACITOR	.1UF80-20-25
C 125	1	21D82187B14	CAPACITOR	1000PF-10-100
C 126	1	21D82187B14	CAPACITOR	1000PF-10-100
C 127	1	23-82397D04	CAPACITOR	15UF-20-15
C 128	1	M39014/02-1326	CAPACITOR	2200PF-10
C 129	1	MMJ-035-106R-20	CAPACITOR	10UF-20-35
C 130	1	21D82428B62	CAPACITOR	.01UF80-20-200
C 131	1	M39014/01-1575	CAPACITOR	.01UF-10-100
C 132	1	21D82187B14	CAPACITOR	1000PF-10-100
C 133	1	23D84665F01	CAPACITOR	10UF-25V
C 134	1	21D82187B14	CAPACITOR	1000PF-10-100
C 135	1	21D82187B14	CAPACITOR	1000PF-10-100
C 136	1	21D82187B14	CAPACITOR	1000PF-10-100
C 137	1	21D82187B14	CAPACITOR	1000PF-10-100
C 138	1	23D84665F01	CAPACITOR	10UF-25V
C 139	1	21D82187B14	CAPACITOR	1000PF-10-100
C 140	1	23D84665F01	CAPACITOR	10UF-25V
C 141	1	21D82187B14	CAPACITOR	1000PF-10-100
C 142	1	MMJ-035-106R-20	CAPACITOR	10UF-20-35
C 143	1	21D82187B04	CAPACITOR	270PF-10-500
C 144	1	VJ0805A330JF	CAPACITOR	33PF-5-100
C 151	1	23D83441B15	CAPACITOR	1.0UF-20-35
C 152	1	TE-1211	CAPACITOR	100UF-25V
C 158	1	23D84665F01	CAPACITOR	10UF-25
C 161	1	23D84665F01	CAPACITOR	10UF-25V
C 162	1	21D82187B14	CAPACITOR	1000PF-10-100
C 163	1	21D82187B14	CAPACITOR	1000PF-10-100
C 164	1	21D82187B14	CAPACITOR	1000PF-10-100
C 165	1	21D82187B14	CAPACITOR	1000PF-10-100
C 166	1	21D82187B14	CAPACITOR	1000PF-10-100
C 167	1	21D82187B14	CAPACITOR	1000PF-10-100
C 168	1	21D82187B14	CAPACITOR	1000PF-10-100
C 169	1	TE-1211	CAPACITOR	100UF-25V
C 170	1	TE-1211	CAPACITOR	100UF-25V
C 171	1	23D84665F01	CAPACITOR	10UF-25V
C 172	1	M39014/01-1575	CAPACITOR	.01UF-10-100
CR101	1	48D84616A01	DIODE	
CR102	1	48-84463K02	DIODE	
CR103	1	48-84463K02	DIODE	
CR104	1	48-84463K02	DIODE	
CR105	1	48-86850C47	DIODE	
CR106	1	48-84463K02	DIODE	

Find No.	Qty. Req.	Part Number	Nomenclature	Part Value
L 101	1	VK200-10/3B	COIL	
L 102	1	VK200-10/3B	COIL	
L 103	1	WEE-12000	INDUCTOR	12MH
Q 101	1	48-84308A92	TRANSISTOR	
Q 102	1	48R00869570	TRANSISTOR	
Q 103	1	48R00869571	TRANSISTOR	
Q 104	1	48R00869570	TRANSISTOR	
Q 105	1	48-84308A92	TRANSISTOR	
Q 106	1	48-869044A	TRANSISTOR	
Q 107	1	48R00869570	TRANSISTOR	
Q 108	1	48-2089C01	TRANSISTOR	
R 101	1	6S124A73	RESISTOR	10K-5-1/4
R 102	1	6S124A49	RESISTOR	1K-5-1/4
R 103	1	6S124A73	RESISTOR	10K-5-1/4
R 104	1	6S124A73	RESISTOR	10K-5-1/4
R 105	1	6S124A73	RESISTOR	10K-5-1/4
R 106	1	6S124A73	RESISTOR	10K-5-1/4
R 107	1	6S124B16	RESISTOR	560K-5-1/4
R 108	1	6S124A49	RESISTOR	1K-5-1/4
R 109	1	6S124A53	RESISTOR	1.5K-5-1/4
R 110	1	6S124A90	RESISTOR	51K-5-1/4
R 111	1	6S124A56	RESISTOR	2.0K-5-1/4
R 112	1	6S124A56	RESISTOR	2.0K-5-1/4
R 113	1	6S124A56	RESISTOR	2.0K-5-1/4
R 114	1	6S125A45	RESISTOR	680-5-1/2
R 115	1	6S124A56	RESISTOR	2.0K-5-1/4
R 116	1	6S124A41	RESISTOR	470-5-1/4
R 117	1	6S124A56	RESISTOR	2.0K-5-1/4
R 118	1	6S124A41	RESISTOR	470-5-1/4
R 119	1	6S124A41	RESISTOR	470-5-1/4
R 120	1	6S124A41	RESISTOR	470-5-1/4
R 121	1	6S124B19	RESISTOR	750K-5-1/4
R 122	1	18D83452F19	RESISTOR,VARIABLE	100K
R 124	1	6S124A49	RESISTOR	1K-5-1/4
R 125	1	6S124A49	RESISTOR	1K-5-1/4
R 126	1	6S124A49	RESISTOR	1K-5-1/4
R 127	1	6S124A41	RESISTOR	470-5-1/4
R 128	1	6S124A41	RESISTOR	470-5-1/4
R 129	1	6S124A53	RESISTOR	1.5K-5-1/4
R 130	1	6S124A53	RESISTOR	1.5K-5-1/4
R 131	1	6S124A73	RESISTOR	10K-5-1/4
R 132	1	6S124A53	RESISTOR	1.5K-5-1/4
R 133	1	6S124A53	RESISTOR	1.5K-5-1/4
R 134	1	6S124A39	RESISTOR	390-5-1/4
R 135	1	6S124A56	RESISTOR	2.0K-5-1/4
R 136	1	6S124A59	RESISTOR	2.7K-5-1/4
R 137	1	6S124A25	RESISTOR	100-5-1/4
R 138	1	6S124A61	RESISTOR	3.3K-5-1/4
R 139	1	6S124A71	RESISTOR	8.2K-5-1/4
R 140	1	6S124A39	RESISTOR	390-5-1/4
R 141	1	6S124A49	RESISTOR	1K-5-1/4
R 142	1	6S185A18	RESISTOR	51-5-1/8
R 143	1	6S124A49	RESISTOR	1K-5-1/4
R 144	1	6S124A41	RESISTOR	470-5-1/4
R 145	1	6S124A41	RESISTOR	470-5-1/4
R 146	1	6S124A51	RESISTOR	1.2K-5-1/4
R 147	1	6S124A07	RESISTOR	18-5-1/4
R 148	1	6S124A53	RESISTOR	1.5K-5-1/4
R 149	1	6S124A35	RESISTOR	270-5-1/4
R 150	1	6S124A41	RESISTOR	470-5-1/4
R 151	1	6S124A41	RESISTOR	470-5-1/4
R 152	1	6S124A57	RESISTOR	2.2K-5-1/4

Find No.	Qty. Req.	Part Number	Nomenclature	Part Value
R 153	1	6S124A23	RESISTOR	82-5-1/4
R 154	1	6S124A77	RESISTOR	15K-5-1/4
R 155	1	6S124A77	RESISTOR	15K-5-1/4
R 156	1	6S124A69	RESISTOR	6.8K-5-1/4
R 157	1	6S124A49	RESISTOR	1K-5-1/4
R 158	1	6S124A49	RESISTOR	1K-5-1/4
R 159	1	6S124A49	RESISTOR	1K-5-1/4
R 160	1	6S124A73	RESISTOR	10K-5-1/4
R 161	1	6S124A49	RESISTOR	1K-5-1/4
R 162	1	6S124A41	RESISTOR	470-5-1/4
R 163	1	6S124A73	RESISTOR	10K-5-1/4
R 164	1	6S124A65	RESISTOR	4.7K-5-1/4
R 165	1	6S124A41	RESISTOR	470-5-1/4
R 166	1	6S124A56	RESISTOR	2.0K-5-1/4
R 167	1	6S124A41	RESISTOR	470-5-1/4
R 168	1	6S124A41	RESISTOR	470-5-1/4
R 169	1	6S125A13	RESISTOR	33-5-1/2
R 170	1	6S124A47	RESISTOR	820-5-1/4
R 171	1	6S125A43	RESISTOR	560-5-1/2
R 172	1	6S124A63	RESISTOR	3900-5-1/4
R 173	1	6S124A73	RESISTOR	10K-5-1/4
U 101	1	51-80321A69	INTEGRATED CIRCUIT	
U 102	1	51-80345A13	INTEGRATED CIRCUIT	
U 103	1	51-84887K73	INTEGRATED CIRCUIT	
U 104	1	51-80345A04	INTEGRATED CIRCUIT	
U 105	1	51-80345A15	INTEGRATED CIRCUIT	
U 106	1	51-84561L55	INTEGRATED CIRCUIT	
U 107	1	51-80345A01	INTEGRATED CIRCUIT	
U 108	1	51-84887K73	INTEGRATED CIRCUIT	
U 109	1	51-80345A01	INTEGRATED CIRCUIT	
U 110	1	51-83819K43	INTEGRATED CIRCUIT	
U 111	1	51-84118K77	INTEGRATED CIRCUIT	
U 112	1	51-84887K10	INTEGRATED CIRCUIT	
U 113	1	51-83819K43	INTEGRATED CIRCUIT	
U 114	1	51-84118K48	INTEGRATED CIRCUIT	
U 115	1	51-84887K73	INTEGRATED CIRCUIT	
U 116	1	51-80345A01	INTEGRATED CIRCUIT	
U 117	1	51-80345A02	INTEGRATED CIRCUIT	
U 118	1	51-80345A02	INTEGRATED CIRCUIT	
U 119	1	51-84688D29	INTEGRATED CIRCUIT	
U 120	1	51-84118K77	INTEGRATED CIRCUIT	
U 121	1	51-84118K77	INTEGRATED CIRCUIT	
U 122	1	51-84118K77	INTEGRATED CIRCUIT	
U 123	1	51-84887K10	INTEGRATED CIRCUIT	
U 124	1	51-84118K77	INTEGRATED CIRCUIT	
U 125	1	51-84118K77	INTEGRATED CIRCUIT	
U 126	1	51-84118K77	INTEGRATED CIRCUIT	
U 127	1	51-84118K77	INTEGRATED CIRCUIT	
U 128	1	51-848877K55	INTEGRATED CIRCUIT	
U 129	1	51-84118K20	INTEGRATED CIRCUIT	
U 130	1	51R84118K05	INTEGRATED CIRCUIT	
U 131	1	51-84118K20	INTEGRATED CIRCUIT	
U 132	1	51-84118K01	INTEGRATED CIRCUIT	
U 133	1	51-84118K01	INTEGRATED CIRCUIT	
U 134	1	51-84887K23	INTEGRATED CIRCUIT	
U 135	1	51R84118K05	INTEGRATED CIRCUIT	
U 136	1	51-84887K72	INTEGRATED CIRCUIT	
U 137	1	51-84887K10	INTEGRATED CIRCUIT	
U 138	1	51-84887K10	INTEGRATED CIRCUIT	
U 139	1	51-84887K10	INTEGRATED CIRCUIT	
U 140	1	51-84887K10	INTEGRATED CIRCUIT	
U 141	1	51-84887K10	INTEGRATED CIRCUIT	

ASSEMBLY PARTS LIST

RF Synthesizer

(Sheet 1)

Find No.	Qty. Req.	Part Number	Nomenclature	Part Value
U 142	1	51-84887K10	INTEGRATED CIRCUIT	
U 143	1	51-84887K10	INTEGRATED CIRCUIT	
U 144	1	51-84887K10	INTEGRATED CIRCUIT	
U 145	1	51-84887K10	INTEGRATED CIRCUIT	
U 146	1	51R82822F03	INTEGRATED CIRCUIT	
VR002	1	48-83193A59	DIODE,ZENERCIRCUIT	5.6V-5-.4
VR003	1	48-83193A59	DIODE,ZENER	5.6V-5-.4
VR004	1	48-82256C50	DIODE,ZENER	3.0-5-.4
VR101	1	51-80345A25	INTEGRATED CIRCUIT	

RF Synthesizer Card A5A2
RTC-4010A

Find No.	Qty. Req.	Part Number	Nomenclature	Part Value
001	1	84-P00461N001	PWB, RF SYNTHESIZER	
002	AR	SN63WRMAP3	SOLDER	
003	AR	11-14167A01	INK	BLACK
004	1	26-P00210N001	SHIELD	
005	1	26-P00210N002	SHIELD	
006	1	26-P00210N003	SHIELD	
007	1	26-P00210N004	SHIELD	
008	1	26-P00210N005	SHIELD	
009	1	26-P00210N006	SHIELD	
011	AR	30-P16137A001	CABLE,SEMI-RIGID	
012	1	26-P00210N007	SHIELD,CAN	
013	1	26-P00240N001	SHIELD,CAN	
014	1	26-P00210N008	SHIELD,CAN	
015	AR	11-P14459A002	ADHESIVE	
016	AR	M23053/5-103-9	INSULATION SLEEVING	.093 WHT
017	AR	M23053/5-205-C	INSULATION SLEEVING	.187 CLR
018	AR		INSULATION SLEEVING	22 WHT
019	AR		INSULATION TAPE	1IN YELLOW
020	AR		WIRE	24
021	AR	RTV3145	ADHESIVE	
022	AR		WIRE,TEFLON	22 SOLID WHT
C 201	1	21D82187B14	CAPACITOR	1000PF-10-100
C 202	1	21D82187B14	CAPACITOR	1000PF-10-100
C 203	1	21D82428B62	CAPACITOR	.01UF80-20-200
C 204	1	21D82428B62	CAPACITOR	.01UF80-20-200
C 205	1	21D82428B62	CAPACITOR	.01UF80-20-200
C 206	1	21D82428B62	CAPACITOR	.01UF80-20-200
C 207	1	21D82428B62	CAPACITOR	.01UF80-20-200
C 208	1	21D82428B62	CAPACITOR	.01UF80-20-200
C 209	1	21D82187B08	CAPACITOR	220PF-10-500
C 210	1	21D82187B08	CAPACITOR	220PF-10-500
C 211	1	21D84494B04	CAPACITOR	100PF-5-500
C 212	1	21D84494B04	CAPACITOR	100PF-5-500
C 213	1	21D82428B62	CAPACITOR	.01UF80-20-200
C 214	1	23D84665F01	CAPACITOR	10UF-25V
C 215	1	VJ0805X101MF	CAPACITOR	100PF-20-100
C 216	1	VJ0805A220JF	CAPACITOR	22PF-5-100
C 217	1	21D82187B14	CAPACITOR	1000PF-10-100
C 218	1	VJ0805A220JF	CAPACITOR	22PF-5-100
C 219	1	VJ0805X222MF	CAPACITOR	2200PF-20-100
C 220	1	VJ0805X101MF	CAPACITOR	100PF-20-100
C 221	1	VJ0805A220JF	CAPACITOR	22PF-5-100
C 222	1	VJ0805X102MF	CAPACITOR	1000PF-20-100
C 223	1	VJ0805X101MF	CAPACITOR	100PF-20-100
C 224	1	VJ0805X102MF	CAPACITOR	1000PF-20-100
C 225	1	VJ0805X102MF	CAPACITOR	1000PF-20-100
C 226	1	VJ0805X101MF	CAPACITOR	100PF-20-100
C 227	1	VJ0805X101MF	CAPACITOR	100PF-20-100
C 228	1	VJ0805X101MF	CAPACITOR	100PF-20-100
C 229	1	VJ0805A220JF	CAPACITOR	22PF-5-100
C 230	1	VJ0805X222MF	CAPACITOR	2200PF-20-100
C 231	1	21D82187B14	CAPACITOR	1000PF-10-100
C 232	1	VJ0805A220JF	CAPACITOR	22PF-5-100
C 233	1	VJ0805A150JF	CAPACITOR	15PF-5-100
C 234	1	VJ0805A150JF	CAPACITOR	15PF-5-100
C 235	1	23D84665F01	CAPACITOR	10UF-25V
C 236	1	VJ0805A100JF	CAPACITOR	10PF-5-100
C 237	1	VJ0805A220JF	CAPACITOR	22PF-5-100
C 238	1	VJ0805A220JF	CAPACITOR	22PF-5-100
C 239	1	VJ0805A100JF	CAPACITOR	10PF-5-100
C 240	1	23D83441B15	CAPACITOR	1.0UF-20-35
C 241	1	21D82428B62	CAPACITOR	.01UF80-20-200
C 242	1	21D84494B04	CAPACITOR	100PF-5-500
C 243	1	VJ0805X222MF	CAPACITOR	2200PF-20-100
C 244	1	21D84494B01	CAPACITOR	51PF-5-500
C 245	1	VJ0805A220JF	CAPACITOR	22PF-5-100
C 246	1	21D84494B01	CAPACITOR	51PF-5-500
C 247	1	21D82428B62	CAPACITOR	.01UF80-20-200
C 248	1	VJ0805A270JF	CAPACITOR	27PF-5-100
C 249	1	VJ0805A220JF	CAPACITOR	22PF-5-100
C 250	1	VJ0805A220JF	CAPACITOR	22PF-5-100
C 251	1	VJ0805X222MF	CAPACITOR	2200PF-20-100
C 252	1	VJ0805A150JF	CAPACITOR	15PF-5-100
C 253	1	VJ0805A150JF	CAPACITOR	15PF-5-100
C 254	1	VJ0805X222MF	CAPACITOR	2200PF-20-100
C 255	1	VJ0805X222MF	CAPACITOR	2200PF-20-100
C 256	1	23D84665F01	CAPACITOR	10UF-25V
C 257	1	VJ0805X101MF	CAPACITOR	100PF-20-100
C 258	1	21D84494B24	CAPACITOR	39PF-5-500
C 259	1	21D84494B24	CAPACITOR	39PF-5-500
C 260	1	21D82428B62	CAPACITOR	.01UF80-20-200
C 261	1	21D82428B62	CAPACITOR	.01UF80-20-200
C 262	1	VJ0805X102MF	CAPACITOR	1000PF-20-100
C 263	1	VJ0805X102MF	CAPACITOR	1000PF-20-100
C 264	1	VJ0805X101MF	CAPACITOR	100PF-20-100
C 265	1	21D84494B04	CAPACITOR	100PF-5-500
C 266	1	21D82428B62	CAPACITOR	.01UF80-20-200
C 267	1	21D84494B34	CAPACITOR	68PF-5-500
C 269	1	21D82428B62	CAPACITOR	.01UF80-20-200
C 270	1	21D82428B62	CAPACITOR	.01UF80-20-200
C 271	1	CM04ED820J03	CAPACITOR	82PF-5-500
C 272	1	21D82428B62	CAPACITOR	.01UF80-20-200
C 273	1	21D82428B62	CAPACITOR	.01UF80-20-200
C 274	1	21D865922	CAPACITOR	390PF-10-500
C 275	1	VJ0805A3R9CF	CAPACITOR	3.9PF-.25-100
C 276	1	VJ0805A3R9CF	CAPACITOR	3.9PF-.25-100
C 277	1	VJ0805A120JF	CAPACITOR	12PF-5-100
C 278	1	VJ0805A5R6CF	CAPACITOR	5.6PF-.25-100
C 279	1	VJ0805A5R6CF	CAPACITOR	5.6PF-.25-10(
C 280	1	VJ0805A180JF	CAPACITOR	18PF-5-100
C 281	1	23-82397D04	CAPACITOR	15UF-20-15
C 282	1	M39014/01-1575	CAPACITOR	.01UF-10-10(
C 283	1	23D84665F02	CAPACITOR	15UF-25V
C 284	1	23D84665F02	CAPACITOR	15UF-25V
C 285	1	M39003/01-2304	CAPACITOR	6.8UF-10-35
C 286	1	TE-1211	CAPACITOR	100UF-25V
C 287	1	23D83441B18	CAPACITOR	4.7UF-20-2(
C 288	1	21D82428B62	CAPACITOR	.01UF80-20-200
C 289	1	23D84665F01	CAPACITOR	10UF-25V
C 290	1	M39014/02-1335	CAPACITOR	6800PF
C 296	1	VJ0805A1R5DF	CAPACITOR	1.5PF-.5PF-100
C 297	1	CM04CD150J03	CAPACITOR	15PF-5-500
C 298	1	21D84494B74	CAPACITOR	6PF-.5PF-500
C 299	1	21D84494B74	CAPACITOR	6PF-.5PF-500
C 300	1	21D84494B74	CAPACITOR	6PF-.5PF-500
C 301	1	21D82187B14	CAPACITOR	1000PF-10-100
C 302	1	21D82187B14	CAPACITOR	1000PF-10-100
C 303	1	21D82187B14	CAPACITOR	1000PF-10-100
C 304	1	21D82187B14	CAPACITOR	1000PF-10-100
C 305	1	23D84665F02	CAPACITOR	15UF-25V
C 306	1	23D84665F02	CAPACITOR	15UF-25V
C 307	1	21C82372C10	CAPACITOR	.05UF-20-25
C 308	1	21C82372C10	CAPACITOR	.05UF-20-25
C 309	1	21D84494B45	CAPACITOR	56PF-5-500
C 310	1	21D84494B38	CAPACITOR	15PF-5-500
C 311	1	21D82187B14	CAPACITOR	1000PF-10-100
C 312	1	23D82397D50	CAPACITOR	.22UF-20-35
C 313	1	23D84665F01	CAPACITOR	10UF-25V
C 314	1	MMJ-035-106R-20	CAPACITOR	10UF-20-35
C 315	1	MMJ-035-106R-20	CAPACITOR	10UF-20-35
C 316	1	MMJ-035-106R-20	CAPACITOR	10UF-20-35
C 317	1	21D82428B62	CAPACITOR	.01UF80-20-200
C 318	1	23D83441B15	CAPACITOR	1.0UF-20-35
C 319	1	21D82428B62	CAPACITOR	.01UF80-20-200
C 320	1	MMJ-035-156R-20	CAPACITOR	15UF-20-35
C 321	1	21D82187B14	CAPACITOR	1000PF-10-100
C 322	1	21D82428B62	CAPACITOR	.01UF80-20-200
C 323	1	21D82428B62	CAPACITOR	.01UF80-20-200
C 324	1	CM04ED220J03	CAPACITOR	22PF-5-500
C 325	1	21D82187B08	CAPACITOR	220PF-10-500
C 326	1	21D82187B08	CAPACITOR	220PF-10-500
C 327	1	21D82187B14	CAPACITOR	1000PF-10-100
C 328	1	21-14032G97	CAPACITOR	2PF-.5PF-500
C 329	1	21D82428B62	CAPACITOR	.01UF80-20-200
C 330	1	21D82187B14	CAPACITOR	1000PF-10-100
C 331	1	21D82428B62	CAPACITOR	.01UF80-20-200
C 332	1	21D82428B62	CAPACITOR	.01UF80-20-200
C 333	1	21D82428B62	CAPACITOR	.01UF80-20-200
C 334	1	21D82428B62	CAPACITOR	.01UF80-20-200
C 335	1	21D84494B37	CAPACITOR	11PF-5-500
C 336	1	21D84494B74	CAPACITOR	6PF-.5PF-500
C 337	1	21D82428B62	CAPACITOR	.01UF80-20-200
C 338	1	21D82428B62	CAPACITOR	.01UF80-20-200
C 339	1	23D84665F01	CAPACITOR	10UF-25V
C 340	1	VJ0805X101MF	CAPACITOR	100PF-20-100
C 341	1	21D82428B10	CAPACITOR	3300PF-10-100
C 342	1	23D84665F01	CAPACITOR	10UF-25V A5A1
C 346	1	VJ0805X221MF	CAPACITOR	220PF-10-100
C 347	1	VJ0805X221MF	CAPACITOR	220PF-10-100
C 348	1	VJ0805X222MF	CAPACITOR	2200PF-20-100
C 349	1	23-82397D04	CAPACITOR	15UF-20-15
C 350	1	23D83441B15	CAPACITOR	1.0UF-20-35
C 351	1	21C82543H03	CAPACITOR	5000PF80-20-500
C 352	1	21C82543H03	CAPACITOR	5000PF80-20-500
C 353	1	21C82543H03	CAPACITOR	5000PF80-20-500
C 354	1	21C82543H03	CAPACITOR	5000PF80-20-500
C 355	1	21C82543H03	CAPACITOR	5000PF80-20-500
C 356	1	VJ0805A4R7DF	CAPACITOR	4.7PF-.5PF-100
C 357	1	21C82543H03	CAPACITOR	5000PF80-20-500
C 358	1	21C82543H03	CAPACITOR	5000PF80-20-500
C 359	1	21C82543H03	CAPACITOR	5000PF80-20-500
C 360	1	21C82543H03	CAPACITOR	5000PF80-20-500
C 361	1	21C82543H03	CAPACITOR	5000PF80-20-500
C 362	1	21C82543H03	CAPACITOR	5000PF80-20-500
C 363	1	21C82543H03	CAPACITOR	5000PF80-20-500
C 364	1	21C82543H03	CAPACITOR	5000PF80-20-500
C 365	1	21C82543H03	CAPACITOR	5000PF80-20-500
C 366	1	21C82543H03	CAPACITOR	5000PF80-20-500
C 367	1	21C82543H03	CAPACITOR	5000PF80-20-500
C 368	1	21C82543H03	CAPACITOR	5000PF80-20-500
C 369	1	21C82543H03	CAPACITOR	5000PF80-20-500
C 370	1	VJ0805X101MF	CAPACITOR	100PF-20-100
C 371	1	23D83441B15	CAPACITOR	1.0UF-20-35
C 372	1	21D82187B14	CAPACITOR	1000PF-10-100
C 373	1	21D82187B14	CAPACITOR	1000PF-10-100
C 374	1	VJ0805X102MF	CAPACITOR	1000PF-20-100
C 375	1	VJ0805X102MF	CAPACITOR	1000PF-20-100
C 376	1	23D83441B18	CAPACITOR	4.7UF-20-20
C 377	1	23D83441B18	CAPACITOR	4.7UF-20-20
C 378	1	23D83441B15	CAPACITOR	1.0UF-20-35
C 379	1	VJ0805X102MF	CAPACITOR	1000PF-20-100
C 380	1	VJ0805X101MF	CAPACITOR	100PF-20-100
C 381	1	VJ0805X102MF	CAPACITOR	1000PF-20-100
C 382	1	VJ0805A1R5DF	CAPACITOR	1.5PF-.5PF-100
C 383	1	23-82397D18	CAPACITOR	33UF-20-10
C 384	1	VJ0805A100JF	CAPACITOR	10PF-5-100
C 385	1	VJ0805X102MF	CAPACITOR	1000PF-20-100
C 386	1	VJ0805X102MF	CAPACITOR	1000PF-20-100
C 387	1	VJ0805A4R7DF	CAPACITOR	4.7PF-.5PF-100
C 388	S01	VJ0805A1R5DF	CAPACITOR	1.5PF-.5PF-100
C 389	1	VJ0805X221MF	CAPACITOR	220PF-10-100
C 390	1	VJ0805X221MF	CAPACITOR	220PF-10-100
C 391	1	VJ0805X221MF	CAPACITOR	220PF-10-100
C 392	1	VJ0805X221MF	CAPACITOR	220PF-10-100
C 393	1	VJ0805X221MF	CAPACITOR	220PF-10-100
C 394	1	21D84494B38	CAPACITOR	15PF-5-500
C 395	1	21D84494B38	CAPACITOR	15PF-5-500
C 396	1	VJ0805X102MF	CAPACITOR	1000PF-20-100
C 397	1	CMR04C2R0D0DP	CAPACITOR	2PF-.5PF-500
C 398	S01	M39014/01-1321	CAPACITOR	10PF-10-200
CR201	1	48-80345A74	VARACTOR	
CR202	1	48-84463K02	DIODE	
CR203	1	48-84463K02	DIODE	
CR204	1	48-84463K02	DIODE	
CR205	1	48-84463K02	DIODE	
CR206	1	48-80345A62	DIODE	
CR207	1	48-80345A62	DIODE	
CR208	1	48-80345A62	DIODE	
CR209	1	48-80345A62	DIODE	
CR210	1	48-80345A62	DIODE	
CR211	1	48-80345A62	DIODE	
CR212	1	48-80345A62	DIODE	
CR214	1	48-84463K02	DIODE	
CR215	1	48-80345A76	VARACTOR	
CR216	1	48-80345A76	VARACTOR	
CR217	1	48-80345A77	DIODE	
CR218	1	48-80345A77	DIODE	
CR219	1	48-84463K02	DIODE	
CR220	1	48-84463K02	DIODE	

ASSEMBLY PARTS LIST

RF Synthesizer
(Sheet 2)

Find No.	Qty. Req.	Part No.	Nomenclature	Part Value
CR221	1	48D84616A01	DIODE	
CR222	1	48D84616A01	DIODE	
CR223	1	48-80345A62	DIODE	
CR224	1	48-80345A62	DIODE	
CR225	1	48-80345A62	DIODE	
CR226	1	48-80345A62	DIODE	
CR227	1	48-84463K02	DIODE	
CR229	1	48-80345A74	VARACTOR	
CR230	1	48-80345A74	VARACTOR	
CR233	1	48-84463K02	DIODE	
CR235	1	48-80345A74	VARACTOR	
CR236	1	48-80345A74	VARACTOR	
CR241	1	48-80345A62	DIODE	
CR242	1	48-80345A62	DIODE	
FL201	1	48-80346A08	CRYSTAL FILTER	10MHZ-2-POLE
K 201	1	228-4-1A	RELAY	
L 201	1	MS75083-1	COIL	.1UH
L 202	1	MS75083-1	COIL	.1UH
L 203	1	24-P00338N003	COIL, AIR WOUND	1T 20
L 204	1	MS75083-1	COIL	.1UH
L 205	1	MS75083-1	COIL	.1UH
L 206	1	24-P00338N002	COIL,AIR WOUND	5 20
L 207	1	24-P00338N002	COIL,AIR WOUND	5 20
L 208	1	24-P00338N002	COIL,AIR WOUND	5 20
L 209	1	24C83961B01	CHOKE,RF	
L 210	1	24C83961B01	CHOKE,RF	
L 211	1	MS75083-3	COIL	.15UH-10
L 213	1	24-P00338N003	COIL, AIR WOUND	1T 20
L 214	1	24-P00338N003	COIL, AIR WOUND	1T 20
L 215	1	24C83961B01	CHOKE,RF	
L 216	1	MS75083-1	COIL	.1UH
L 217	1	MS75083-1	COIL	.1UH
L 218	1	MS75083-4	COIL	.18UH
L 219	1	24-P00338N001	COIL, AIR WOUND	3T 24
L 220	1	24-P00338N001	COIL, AIR WOUND	3T 24
L 221	1	24-P00338N004	COIL,AIR WOUND	4T 24
L 222	1	24-P00338N004	COIL,AIR WOUND	4T 24
L 224	1	MS75083-5	COIL	.22UH
L 225	1	MS75083-7	COIL	.33UH
L 226	1	MS75083-1	COIL	.1UH
L 227	1	MS75083-1	COIL	.1UH
L 228	1	MS75083-9	COIL	.47UH
L 229	1	MS75083-7	COIL	.33UH
L 230	1	WEE-12000	INDUCTOR	12MH
L 231	1	WEE-12000	INDUCTOR	12MH
L 232	1	DD-0.47-1	COIL	.47UH-1
L 233	1	MS75084-12	COIL	10UH
L 234	1	MS90538-12	COIL	100UH
L 235	1	MS90538-12	COIL	100UH
L 236	1	MS75083-5	COIL	.22UH
L 237	1	74-15169A01	BEAD, FERRITE	
L 238	1	MS75083-3	COIL	.15UH-10
L 239	1	MS75083-3	COIL	.15UH-10
L 240	1	24C83961B01	CHOKE,RF	
L 241	1	WEE-12000	INDUCTOR	12MH
L 242	1	MS75083-1	COIL	.1UH
L 243	1	MS90538-12	COIL	100UH
L 244	1	MS75083-1	COIL	.1UH
L 245	1	MS75083-1	COIL	.1UH
L 246	1	MS75083-1	COIL	.1UH
L 247	1	MS90538-12	COIL	100UH
L 248	1	MS75084-16	COIL	22UH
L 249	1	MS75083-5	COIL	.22UH

Find No.	Qty. Req.	Part No.	Nomenclature	Part Value
Q 201	1	48-80345A46	TRANSISTOR	
Q 202	1	48R00869571	TRANSISTOR	
Q 203	1	48R00869571	TRANSISTOR	
Q 204	1	48-84309A61	TRANSISTOR	
Q 205	1	48-84309A61	TRANSISTOR	
Q 206	1	48-80345A54	TRANSISTOR	
Q 207	1	48R00869870	TRANSISTOR	
Q 208	1	48R00869570	TRANSISTOR	
Q 209	1	48R00869570	TRANSISTOR	
Q 210	1	48R00869571	TRANSISTOR	
Q 211	1	48R00869571	TRANSISTOR	
Q 212	1	48-80345A47	TRANSISTOR	
Q 213	1	48R00869870	TRANSISTOR	
Q 214	1	48R00869870	TRANSISTOR	
Q 215	1	48R00869870	TRANSISTOR	
Q 216	1	48R00869571	TRANSISTOR	
Q 217	1	48-6123A22	TRANSISTOR	
Q 218	1	48-80346A65	TRANSISTOR	
Q 219	1	48-2089C01	TRANSISTOR	
Q 220	1	48R00869870	TRANSISTOR	
Q 221	1	48R00869570	TRANSISTOR	
Q 222	1	48R00869570	TRANSISTOR	
Q 223	1	48-80345A57	TRANSISTOR	
Q 224	1	48-84309A61	TRANSISTOR	
Q 225	1	48-84309A61	TRANSISTOR	
Q 226	1	48-84309A61	TRANSISTOR	
Q 227	1	48-80345A57	TRANSISTOR	
Q 228	1	48R00869571	TRANSISTOR	
Q 229	1	48-84308A92	TRANSISTOR	
Q 230	1	48-869044	TRANSISTOR	
Q 231	1	48-84302A36	TRANSISTOR	
Q 232	1	48R00869870	TRANSISTOR	
Q 233	1	48-2089C01	TRANSISTOR	
R 201	1	6S124A18	RESISTOR	51-5-1/4
R 202	1	6S124A41	RESISTOR	470-5-1/4
R 203	1	6S124A41	RESISTOR	470-5-1/4
R 204	1	6S124A25	RESISTOR	100-5-1/4
R 205	1	6S185A25	RESISTOR	100-5-1/8
R 206	1	6S124A41	RESISTOR	470-5-1/4
R 207	1	6S124A41	RESISTOR	470-5-1/4
R 208	1	6S124A41	RESISTOR	470-5-1/4
R 209	1	6S124A41	RESISTOR	470-5-1/4
R 210	1	6S124A41	RESISTOR	470-5-1/4
R 211	1	6S124A41	RESISTOR	470-5-1/4
R 212	1	6S185A53	RESISTOR	1.5K-5-1/8
R 213	1	6S124A31	RESISTOR	180-5-1/4
R 214	1	6S124A31	RESISTOR	180-5-1/4
R 215	1	6S124A15	RESISTOR	39-5-1/4
R 216	1	6S124A41	RESISTOR	470-5-1/4
R 217	1	6S124A41	RESISTOR	470-5-1/4
R 218	1	6S124A59	RESISTOR	2.7K-5-1/4
R 219	1	6S124A59	RESISTOR	2.7K-5-1/4
R 220	1	6S124A79	RESISTOR	18K-5-1/4
R 221	1	6S124A59	RESISTOR	2.7K-5-1/4
R 222	1	6S124A59	RESISTOR	2.7K-5-1/4
R 223	1	6S124A79	RESISTOR	18K-5-1/4
R 224	1	6S124A49	RESISTOR	1K-5-1/4
R 225	1	6S124A79	RESISTOR	18K-5-1/4
R 227	1	6S124A43	RESISTOR	560-5-1/4
R 228	1	6S124A29	RESISTOR	150-5-1/4
R 229	1	6S124A29	RESISTOR	150-5-1/4
R 230	1	6S185A73	RESISTOR	10K-5-1/8
R 231	1	6S124A25	RESISTOR	100-5-1/4
R 232	1	6S185A33	RESISTOR	220-5-1/8

Find No.	Qty. Req.	Part Number	Nomenclature	Part Value
R 233	1	6S185A33	RESISTOR	220-5-1/8
R 234	1	6S185A09	RESISTOR	22-5-1/8
R 235	1	6S185A85	RESISTOR	33K-5-1/8
R 236	1	6S185A95	RESISTOR	82K-5-1/8
R 237	1	6S185A47	RESISTOR	820-5-1/8
R 238	1	6S185A49	RESISTOR	1K-5-1/8
R 239	1	6S124A25	RESISTOR	100-5-1/4
R 240	1	6S185A18	RESISTOR	51-5-1/8
R 241	1	6S185A41	RESISTOR	470-5-1/8
R 242	1	6S185A43	RESISTOR	560-5-1/8
R 243	1	6S185A43	RESISTOR	560-5-1/8
R 244	1	6S185A53	RESISTOR	1.5K-5-1/8
R 245	1	6S185A33	RESISTOR	220-5-1/8
R 246	1	6S185A33	RESISTOR	220-5-1/8
R 247	1	6S185A25	RESISTOR	100-5-1/8
R 248	1	6S185A05	RESISTOR	15-5-1/8
R 249	1	6S185A05	RESISTOR	15-5-1/8
R 250	1	6S124A97	RESISTOR	100K-5-1/4
R 251	1	6S124A85	RESISTOR	33K-5-1/4
R 252	1	6S185A57	RESISTOR	2.2K-5-1/8
R 253	1	6S185A49	RESISTOR	1K-5-1/8
R 254	1	6S185A53	RESISTOR	1.5K-5-1/8
R 255	1	6S185A45	RESISTOR	680-5-1/8
R 256	1	6S185A09	RESISTOR	22-5-1/8
R 257	1	6S185A09	RESISTOR	22-5-1/8
R 258	1	6S185A21	RESISTOR	68-5-1/8
R 259	1	6S185A49	RESISTOR	1K-5-1/8
R 260	1	6S185A49	RESISTOR	1K-5-1/8
R 261	1	6S185A49	RESISTOR	1K-5-1/8
R 262	1	6S185A49	RESISTOR	1K-5-1/8
R 263	1	6S185A49	RESISTOR	1K-5-1/8
R 264	1	6S185A49	RESISTOR	1K-5-1/8
R 265	1	6S124A73	RESISTOR	10K-5-1/4
R 266	1	6S124A65	RESISTOR	4.7K-5-1/4
R 267	1	6S185A57	RESISTOR	2.2K-5-1/8
R 268	1	6S185A65	RESISTOR	4.7K-5-1/8
R 269	1	6S185A59	RESISTOR	2.7K-5-1/8
R 270	1	6S185A75	RESISTOR	12K-5-1/8
R 271	1	6S185A67	RESISTOR	5.6K-5-1/8
R 272	1	6S185A29	RESISTOR	150-5-1/8
R 273	1	6S185A71	RESISTOR	8.2K-5-1/8
R 274	1	6S185A75	RESISTOR	12K-5-1/8
R 275	1	6S185A37	RESISTOR	330-5-1/8
R 276	1	6S185A29	RESISTOR	150-5-1/8
R 277	1	6S185A25	RESISTOR	100-5-1/8
R 278	1	6S185A17	RESISTOR	47-5-1/8
R 279	1	6S185A05	RESISTOR	15-5-1/8
R 281	1	6S185A53	RESISTOR	1.5K-5-1/8
R 282	1	6S185A33	RESISTOR	220-5-1/8
R 283	1	6S185A33	RESISTOR	220-5-1/8
R 284	1	6S185A05	RESISTOR	15-5-1/8
R 285	1	6S185A05	RESISTOR	15-5-1/8
R 286	1	6S185A27	RESISTOR	120-5-1/8
R 287	1	6S185A21	RESISTOR	68-5-1/8
R 288	1	6S185A27	RESISTOR	120-5-1/8
R 289	1	6S185A13	RESISTOR	33-5-1/8
R 290	1	6S185A07	RESISTOR	18-5-1/8
R 291	1	6S185A69	RESISTOR	6.8K-5-1/8
R 292	1	6S185A69	RESISTOR	6.8K-5-1/8
R 293	1	6S185A63	RESISTOR	3.9K-5-1/8
R 294	1	6S185A39	RESISTOR	390-5-1/8
R 295	1	6S185A36	RESISTOR	300-5-1/8
R 296	1	6S185A36	RESISTOR	300-5-1/8
R 297	1	6S185A07	RESISTOR	18-5-1/8

Find No.	Qty. Req.	Part Number	Nomenclature	Part Value
R 298	1	6S185A44	RESISTOR	620-5-1/8
R 299	1	6S185A44	RESISTOR	620-5-1/8
R 300	1	6S185A18	RESISTOR	51-5-1/8
R 301	1	6S124A15	RESISTOR	39-5-1/4
R 302	1	6S124A33	RESISTOR	220-5-1/4
R 303	1	6S124A33	RESISTOR	220-5-1/4
R 304	1	6S124A45	RESISTOR	680-5-1/4
R 305	1	6S124A35	RESISTOR	270-5-1/4
R 307	1	6S124A15	RESISTOR	39-5-1/4
R 308	1	6S124A49	RESISTOR	1K-5-1/4
R 309	1	6S124A59	RESISTOR	2.7K-5-1/4
R 310	1	6S124A73	RESISTOR	10K-5-1/4
R 311	1	6S124A73	RESISTOR	10K-5-1/4
R 312	1	6S124A73	RESISTOR	10K-5-1/4
R 313	1	6S124A73	RESISTOR	10K-5-1/4
R 314	1	6S124A49	RESISTOR	1K-5-1/4
R 315	1	6S124A49	RESISTOR	1K-5-1/4
R 319	1	6S185A27	RESISTOR	2.2K-5-1/8
R 320	1	6S185A94	RESISTOR	75K-5-1/8
R 321	1	6S185A97	RESISTOR	100K-5-1/8
R 322	1	6S185A49	RESISTOR	1K-5-1/8
R 323	1	6S185A73	RESISTOR	10K-5-1/8
R 324	1	6S124A36	RESISTOR	300-5-1/4
R 325	1	6S124A07	RESISTOR	18-5-1/4
R 326	1	6S124A36	RESISTOR	300-5-1/4
R 327	1	6S124A43	RESISTOR	560-5-1/4
R 328	1	6S185A65	RESISTOR	4.7K-5-1/8
R 329	1	6S185A41	RESISTOR	470-5-1/4
R 330	1	6S185A75	RESISTOR	12K-5-1/8
R 331	1	6S124A41	RESISTOR	470-5-1/4
R 332	1	6S185A36	RESISTOR	300-5-1/8
R 333	1	6S185A36	RESISTOR	300-5-1/8
R 334	1	6S185A07	RESISTOR	18-5-1/8
R 335	1	6S185A18	RESISTOR	51-5-1/8
R 336	1	6S185A53	RESISTOR	1.5K-5-1/8
R 337	1	6S185A05	RESISTOR	15-5-1/8
R 338	1	6S185A05	RESISTOR	15-5-1/8
R 339	1	6S185A18	RESISTOR	51-5-1/4
R 340	1	6S185A31	RESISTOR	180-5-1/8
R 341	1	6S185A13	RESISTOR	33-5-1/8
R 342	1	6S185A27	RESISTOR	120-5-1/8
R 343	1	6S185A47	RESISTOR	820-5-1/8
R 344	1	6S185A49	RESISTOR	1K-5-1/8
R 345	1	6S185A43	RESISTOR	560-5-1/8
R 346	1	6S185A43	RESISTOR	560-5-1/8
R 347	1	6S185A41	RESISTOR	470-5-1/8
R 348	1	6S185A21	RESISTOR	68-5-1/8
R 349	1	6S185A61	RESISTOR	3.3K-5-1/8
R 350	1	6S185A59	RESISTOR	2.7K-5-1/8
R 351	1	6S185A35	RESISTOR	270-5-1/8
R 352	1	6S124A61	RESISTOR	3.3K-5-1/4
R 353	1	6S124A35	RESISTOR	270-5-1/4
R 354	1	18D83452F16	RESISTOR,VARIABLE	20K
R 355	1	6S124B09	RESISTOR	300K-5-1/4
R 356	1	6S124A83	RESISTOR	27K-5-1/4
R 357	1	6S185A05	RESISTOR	15-5-1/8
R 358	1	06-10621D56	RESISTOR	46.4K-1-1/8 NOMINAL
R 358	S01	06-10621D48	RESISTOR	38.3K-1-1/8
R 358	S01	06-10621D52	RESISTOR	42.2K-1-1/8
R 358	S01	06-10621D60	RESISTOR	51.1K-1-1/8
R 358	S01	06-10621D64	RESISTOR	56.2K-1-1/8
R 358	S01	06-10621D68	RESISTOR	61.9K-1-1/8
R 359	1	06-10621D36	RESISTOR	28.7K-1-1/8
R 360	1	06-10621D36	RESISTOR	28.7K-1-1/8

ASSEMBLY PARTS LIST
RF Synthesizer
(Sheet 3)

Find No.	Qty. Req.	Part No.	Nomenclature	Part Value
R 361	1	6S124A83	RESISTOR	27K-5-1/4
R 362	1	6S124A97	RESISTOR	100K-5-1/4
R 363	1	6S124A73	RESISTOR	10K-5-1/4
R 364	1	6S124A73	RESISTOR	10K-5-1/4
R 365	1	6S124A73	RESISTOR	10K-5-1/4
R 366	1	6S124A73	RESISTOR	10K-5-1/4
R 367	1	6S124A73	RESISTOR	10K-5-1/4
R 368	1	6S124A56	RESISTOR	2.0K-5-1/4
R 369	1	06-10621D60	RESISTOR	51,1-1-1/8
R 370	1	06-10621C27	RESISTOR	2150-1-1/8
R 371	1	06-10621E04	RESISTOR	143K-1-1/8
R 372	1	06-10621D74	RESISTOR	71.5K-1-1/8
R 373	1	06-10621D44	RESISTOR	34.8K-1-1/8
R 374	1	06-10621D12	RESISTOR	16.2K-1-1/8
R 375	1	6S124A73	RESISTOR	10K-5-1/4
R 376	1	6S185A05	RESISTOR	15-5-1/8
R 377	1	6S124A90	RESISTOR	51K-5-1/4
R 378	1	6S124A96	RESISTOR	91K-5-1/4
R 379	1	6S124A81	RESISTOR	22K-5-1/4
R 380	1	6S124A61	RESISTOR	3.3K-5-1/4
R 381	1	6S124A91	RESISTOR	56K-5-1/4
R 382	1	6S124A56	RESISTOR	2.0K-5-1/4
R 383	1	6S124A81	RESISTOR	22K-5-1/4
R 384	1	6S124A99	RESISTOR	120K-5-1/4
R 385	1	6S124A73	RESISTOR	10K-5-1/4
R 386	1	6S124A25	RESISTOR	100-5-1/4
R 387	1	6S185A24	RESISTOR	91-5-1/8
R 389	1	6S124A73	RESISTOR	10K-5-1/4
R 390	1	6S124A25	RESISTOR	100-5-1/4
R 391	1	6S124A97	RESISTOR	100K-5-1/4
R 392	1	6S124A79	RESISTOR	18K-5-1/4
R 393	1	6S124A25	RESISTOR	100-5-1/4
R 394	1	6S124A75	RESISTOR	12K-5-1/4
R 395	1	6S124A75	RESISTOR	12K-5-1/4
R 396	1	6S124A01	RESISTOR	10-5-1/4
R 397	1	6S124A73	RESISTOR	10K-5-1/4
R 398	1	6S124A47	RESISTOR	820-5-1/4
R 399	1	6S124A51	RESISTOR	1.2K-5-1/4
R 400	1	6S124A01	RESISTOR	10-5-1/4
R 401	1	6S124A49	RESISTOR	1K-5-1/4
R 402	1	6S124A49	RESISTOR	1K-5-1/4
R 403	1	6S124A49	RESISTOR	1K-5-1/4
R 404	1	6S185A49	RESISTOR	1K-5-1/8
R 405	1	6S124A73	RESISTOR	10K-5-1/4
R 406	1	6S124A49	RESISTOR	1K-5-1/4
R 407	1	6S185A56	RESISTOR	2.0K-5-1/8
R 408	1	6S124A25	RESISTOR	100-5-1/4
R 409	1	6S185A49	RESISTOR	1K-5-1/8
R 410	1	6S185A61	RESISTOR	3.3K-5-1/8
R 411	1	6S185A49	RESISTOR	1K-5-1/8
R 412	1	6S185A41	RESISTOR	470-5-1/8
R 413	1	6S185A45	RESISTOR	680-5-1/8
R 414	1	6S124A37	RESISTOR	330-5-1/4
R 415	1	6S124A37	RESISTOR	330-5-1/4
R 416	1	6S185A65	RESISTOR	4.7K-5-1/8
R 417	1	6S185A25	RESISTOR	100-5-1/8
R 418	1	6S185A33	RESISTOR	220-5-1/8
R 419	1	6S185A27	RESISTOR	120-5-1/8
R 420	1	6S185A27	RESISTOR	120-5-1/8
R 421	1	6S185A18	RESISTOR	51-5-1/8
R 422	1	6S185A33	RESISTOR	220-5-1/8
R 423	1	6S185A53	RESISTOR	1.5K-5-1/8
R 424	1	6S185A51	RESISTOR	1.2K-5-1/8

Find No.	Qty. Req.	Part Number	Nomenclature	Part Value
R 425	1	6S185A65	RESISTOR	4.7K-5-1/8
R 426	1	6S185A67	RESISTOR	5.6K-5-1/8
R 427	1	6S185A37	RESISTOR	330-5-1/8
R 428	1	6S185A37	RESISTOR	330-5-1/8
R 429	1	6S185A37	RESISTOR	330-5-1/8
R 430	1	6S185A37	RESISTOR	330-5-1/8
R 431	1	6S185A41	RESISTOR	470-5-1/8
R 432	1	6S185A21	RESISTOR	68-5-1/8
R 434	1	6S185A31	RESISTOR	180-5-1/8
R 435	1	6S124A56	RESISTOR	2.0K-5-1/4
T 201	1	24-P06611B016	TRANSFORMER	2T 32 ON 3B BEAD
T 202	1	24-P06611B016	TRANSFORMER	2T 32 ON 3B BEAD
U 201	1	51-80345A33	INTEGRATED CIRCUIT	
U 202	1	51-80345A14	INTEGRATED CIRCUIT	
U 203	1	51-80321A69	INTEGRATED CIRCUIT	
U 204	1	51-80345A01	INTEGRATED CIRCUIT	
U 205	1	51-80323A60	INTEGRATED CIRCUIT	
U 206	1	51-80346A05	MIXER	
U 207	1	51R84320A80	INTEGRATED CIRCUIT	
U 208	1	51-80345A32	INTEGRATED CIRCUIT	
U 209	1	51-80346A05	MIXER	
U 210	1	51-80345A04	INTEGRATED CIRCUIT	
U 211	1	51-80345A30	MICRO CIRCUIT	
U 212	1	51-80346A54	INTEGRATED CIRCUIT	
U 213	1	51-84887K67	INTEGRATED CIRCUIT	
U 214	1	51-82764K29	INTEGRATED CIRCUIT	
U 215	1	51-80345A04	INTEGRATED CIRCUIT	
U 216	1	51-84887K26	INTEGRATED CIRCUIT	
U 217	1	51-80345A01	INTEGRATED CIRCUIT	
U 218	1	51-80345A23	INTEGRATED CIRCUIT	
U 219	1	51-06472A26	INTEGRATED CIRCUIT	
VR201	1	48-83193A59	DIODE,ZENER	5.6V-5-.4
VR202	1	48-82256C44	DIODE, ZENER	7.5V-5-.4
VR203	1	48-82256C44	DIODE, ZENER	7.5V-5-.4
VR204	1	48-82256C44	DIODE, ZENER	7.5V-5-.4
VR205	1	48-82256C44	DIODE,ZENER	7.5V-5-.4
VR206	1	48-80345A94A	DIODE, ZENER	10V-5-.4
VR207	1	48-80345A94A	DIODE, ZENER	10V-5-.4
VR208	1	48-80345A78	DIODE	11V-5-.4
VR209	1	48-82556C15A	DIODE,ZENER	5.1V-5-.4
VR210	1	48-80345A78	DIODE	11V-5-.4

ASSEMBLY PARTS LIST
RF Synthesizer
(Sheet 4)

SECTION 12

AUDIO SYNTHESIZER (A6)

12-1. General. Generation, processing, and control of modulation audio is the function of the Audio Synthesizer module. Three modulation signals, private line, digital private line, and a fixed 1 kHz, are generated on the board. Processing for external microphone and BNC jack audio inputs as well as sumation of all modulation sources to form a composite source is provided. Switching of the composite source to the appropriate modulator completes the function of the Audio Synthesizer. A block diagram of the Audio Synthesizer is shown in figure 12-1 with its schematic in figure 12-2.

12-2. Private Line Generator. Private line tones from 10 Hz to 10 kHz in 0.1 Hz increments are synthesized using a phase accumulative technique. Consider the 360 degrees in a cycle to be divided into 2" pieces. A 20 bit digital accumulator incrementing at some fixed rate could then at any instant represent a fixed point in the 360 cycle. That is, if the accumulator was half full it would represent the 180° point and if totally full would represent the 360° point.

12-3. The number of times per second that the accumulator goes through its complete cycle determines the output frequency. If the increment rate is fixed, the time required to accumulate 2^{20} bits can be changed by changing the number of bits added at each increment time.

12-4. The PL synthesizer increments at a 104 857.6 Hz rate so that if only one bit were added each time, the time to complete one cycle would be 10 seconds. Processor loaded control latches determine the number of bits to be added at each increment time and thus the final output frequency. A 20 Bit Adder adds the control word to the current word in the 20 bit accumulator Latch. At the next increment time the Adder output is latched and becomes the next .input to the Adder.

12-5. Conversion of the linear digital output of the 20-Bit Latch accumulator into a sinusoidal digital output is the function of the Decode ROM. A Digital to Analog (D/A) converter following the ROM converts the sinusoidal information into a quantized sinewave having a period equal to the cycle time of the 20-Bit Latch accumulator.

12-6. A bandpass filter with a 10 Hz to 10 kHz passband filters the quantized waveform to a sinewave having less than 1% distortion. The level of the sinewave is processor controllable by a programmable attenuator having 0, 10, 20, and 30 dB settings. The output of the PL generator is switched with the output of the DPL generator to give the INT MOD signal.

12-7. DPL Generator. The 23 bit Digital Private Line (DPL) word is generated by the processor from the 3-digit code. The 23-bit word is then transferred to a serial shift register and clocked out at a 133 Hz rate. Connecting the output of the shift register back to its input causes the 23-bit word to be continuously repeated.

12-8. A 133 Hz tone from the PL generator is the DPL clock input. For the DPL output mode the tone is gated to the clock input of the shift register by the Shift Register Control circuit. During the load mode the Shift Register Control gates a control latch to the shift register input. Twenty three data bits and clock pulses are then provided by the processor to load the DPL word. At the completion of the load mode, the Shift Register Control switches back to the output mode to cause the DPL word to be cycled through the shift register at the 133 Hz rate.

12-9. A bandpass filter following the shift register output removes the higher frequency components of the digital signal. The filtered DPL signal is then applied to the select switch. For the DPL off code (133 Hz tone), the processor switches the INT MOD line to the PL output so that a 133 Hz sinewave is output.

12-10. 1 kHz Tone. A filtered 1 kHz square wave provides the fixed 1 kHz modulation source. The SYNTH 1 kHz signal from the RF Synthesizer is filtered to less than 1% distortion by a bandpass filter. The filter output is the 1 kHz signal source.

12-11. External Modulation. A microphone and a front panel jack are the external modulation inputs. An Instaneous Deviation Control (IDC) circuit amplifies and limits the microphone signal (MIC IN) before sumation with the signal (EXT MOD IN) from the front panel jack. The sumation signal is the EXT MOD source.

12-12. Modulation Control. Level control of the three modulation sources is by either the front panel controls or the IEEE interface module. The level adjusted sources are then returned to the Audio Synthesizer module where they are summed together to form the composite modulation audio. The composite signal is then routed to the Scope/DVM Control module (MOD CAL AUDIO) for modulation determination, to a buffer amp which drives the front panel modulation output (MOD TO FP), and to a Modulation Select Switch which routes the signal to the desired modulator.

12-13. Modulation audio is switched to the speaker (VOL CNTL AUDIO) for any generate mode, to the DSBSC modulator (DSBSC MOD) for sideband modulation, to the RF Synthesizer for frequency modulation (FM MOD), to the offset oscillator for frequency modulation of the duplex output (OFFSET MOD), and to the RF output leveling loop for amplitude modulation. The signal for amplitude modulation is summed with a 5 VDC level and then routed to the variable RF level control on the front panel (5 VDC + AM MOD). Atthe RF level control the signal is attenuated according to the level setting to give the'DC plus AM reference signal for the output leveling loop.

12-14. Module Control. Processor control of the Audio Synthesizer is via the AF control bus. The four bit address bus (AF ADD BUS 0-3) is decoded by the Address Decoder to determine which control latch is to be accessed. Control data is transferred to the accessed latch on the four bit data bus (AF DATA BUS 0-3). Synchronization of the data transfere is the function of the AF BUS EN1 signal line.

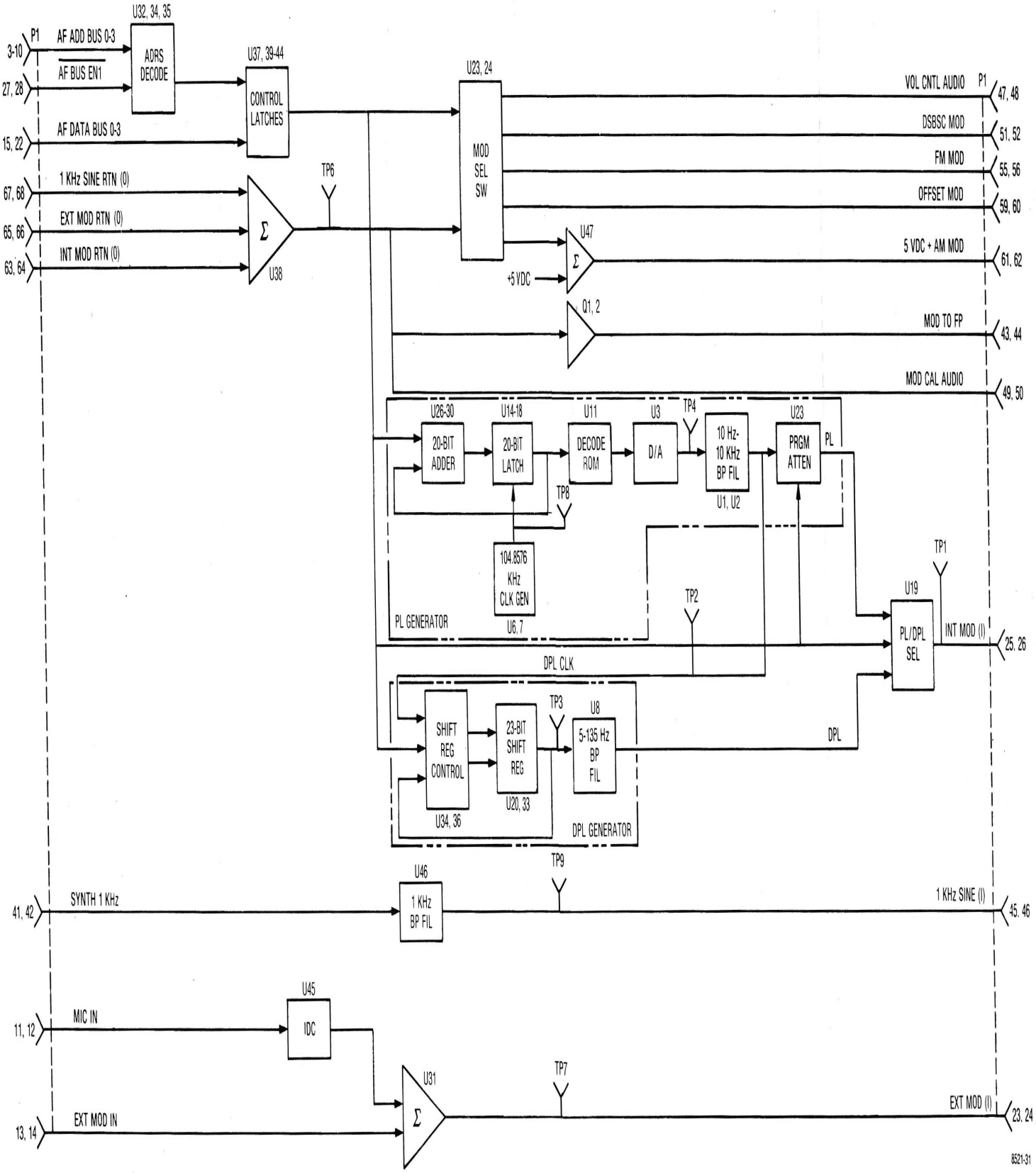

Figure 12-1. Audio Synthesizer A6 Block Diagram

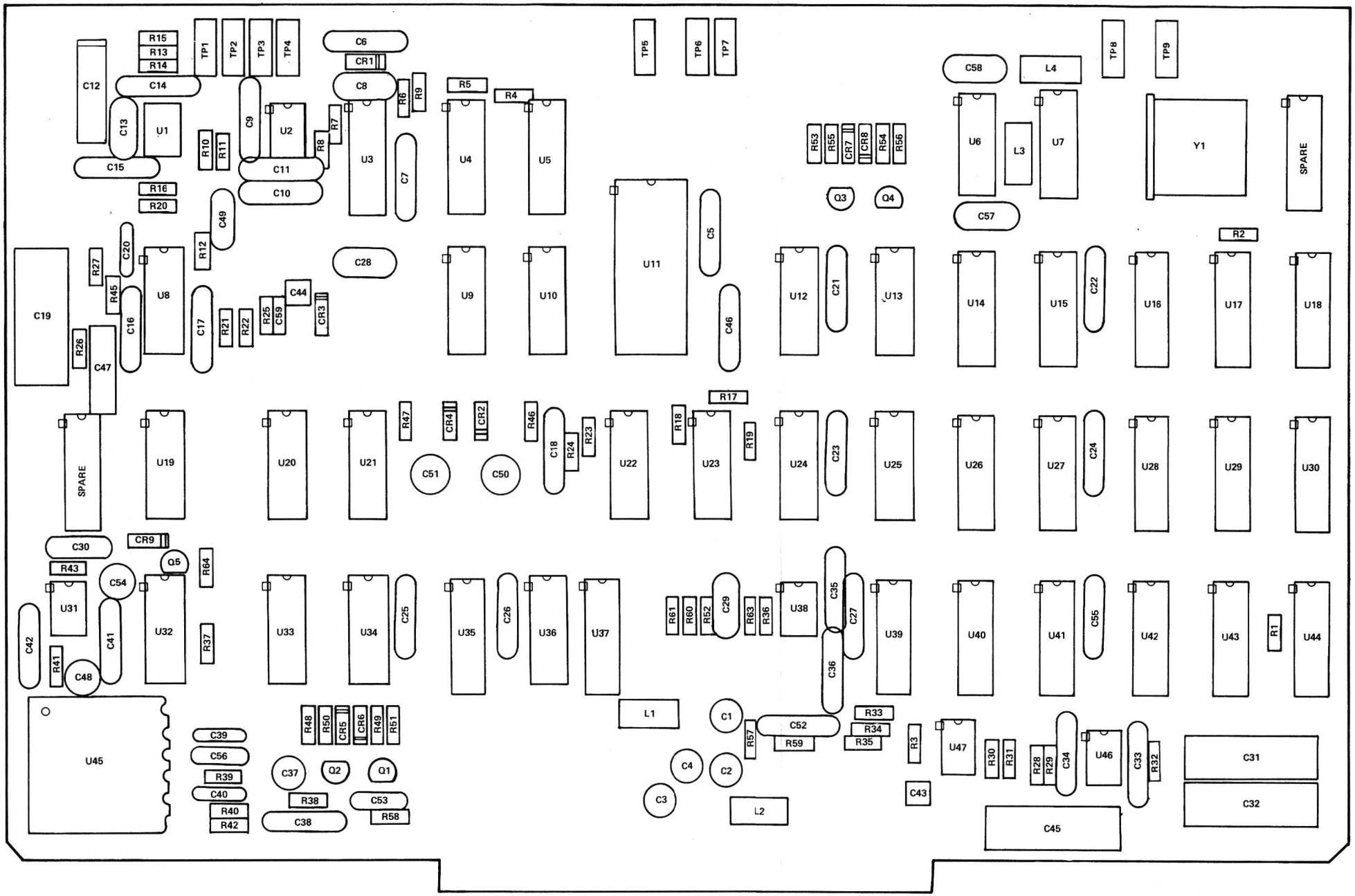

Figure 12-3. Audio Synthesizer Parts Locator

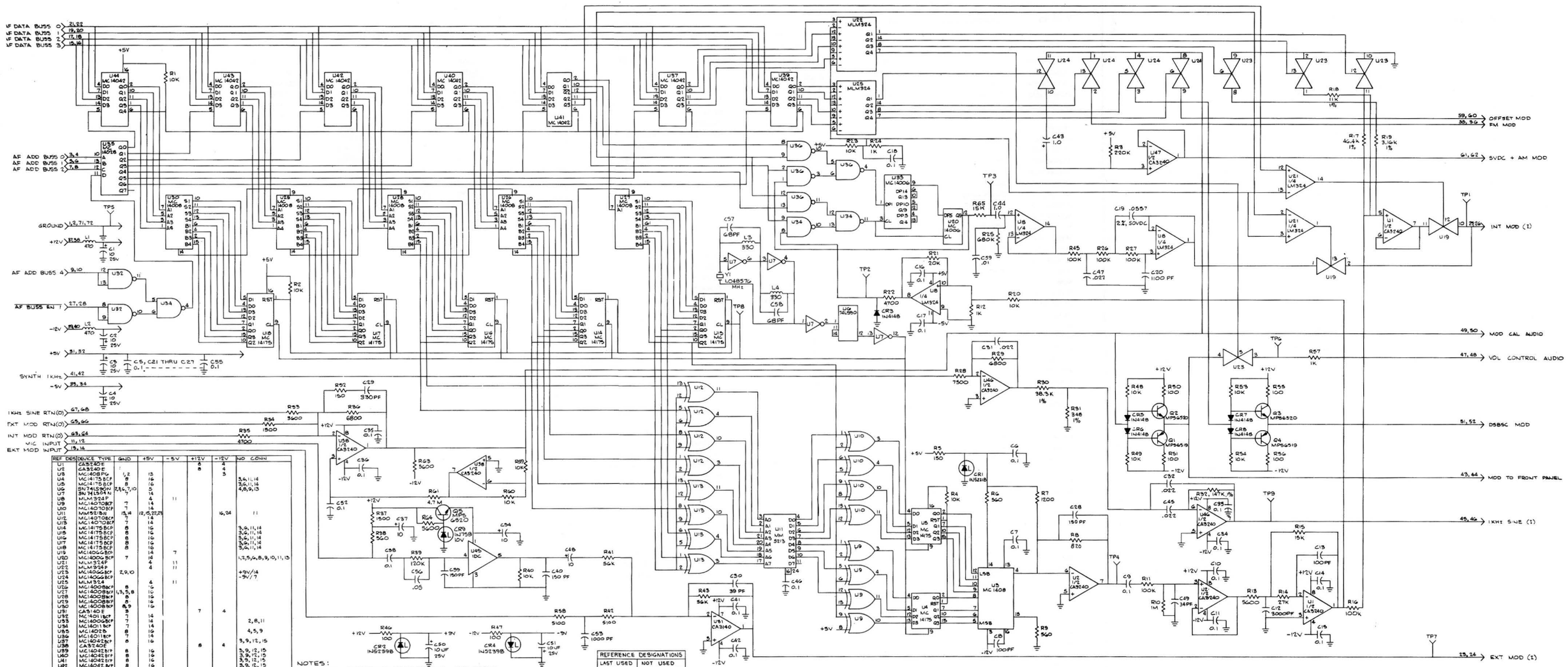

REF DES	DEVICE TYPE	GND	+5V	-5V	+12V	-12V	NO CONN
U1	CA3240E				8	4	
U2	CA3240E				8	4	
U3	MC1408P6	1,2	13			3	
U4	MC14175BCP	8	16				3,4,11,14
U5	MC14175BCP	8	16				3,6,11,14
U6	SN74LS90N	2,3,4,7,10	5				1,8,9,13
U7	SN74LS04N	7	14				
U8	MLM324P		4	11			
U9	MC14070BP	7	14				
U10	MC14070BCP	7	14				
U11	MM5218N	13,14	12,15,22,23			6,24	11
U12	MC14070BCP	7	14				
U13	MC14070BCP	7	14				
U14	MC14175BCP	8	16				3,6,11,14
U15	MC14175BCP	8	16				3,6,11,14
U16	MC14175BCP	8	16				3,6,11,14
U17	MC14175BCP	8	16				3,6,11,14
U18	MC14175BCP	8	16				3,6,11,14
U19	MC14069BCP		14	7			
U20	MC14006BCP	7	14				1,2,5,6,8,9,10,11,13
U21	MLM324P		4	11			
U22	MLM324P		4	11			
U23	MC14049BCP	8,10					+9V/14
U24	MC14049BCP						-9V/7
U25	MLM324		4	11			
U26	MC14008BCP	8	16				
U27	MC14008BCP	1,3,5,8	16				
U28	MC14008BCP	8	16				
U29	MC14008BCP	8	16				
U30	MC14008BCP	8,9	16				
U31	CA3140E	4			7	4	
U32	MC14011BCP	7	14				
U33	MC14009BCP	7	14				2,8,11
U34	MC14011BCP	7	14				
U35	MC1402B	8	16				4,5,9
U36	MC14011BCP	7	14				
U37	MC14042BCP	8	16				3,9,12,15
U38	CA3140E				8	4	
U39	MC14042BCP	8	16				3,9,12,15
U40	MC14042BCP	8	16				3,9,12,15
U41	MC14042BCP	8	16				3,9,12,15
U42	MC14042BCP	8	16				3,9,12,15
U43	MC14042BCP	8	16				3,9,12,15
U44	MC14042BCP	8	16				3,9,12,15
U45	IDC	3					2
U46	CA3240E	3,5			8	4	
U47	CA3240E				8	4	

NOTES:
1. PARTIAL REFERENCE DESIGNATIONS ARE SHOWN. FOR COMPLETE DESIGNATION PREFIX WITH 1A6.
2. FOR REFERENCE DRAWINGS REFER TO ASSEMBLY 01-P00426N
3. UNLESS OTHERWISE SPECIFIED:
ALL RESISTORS ARE IN OHMS ± 5 PCT, 1/4 WATT
ALL CAPACITORS ARE IN UF
ALL INDUCTORS ARE IN UH
ALL VOLTAGES ARE IN DC.

REFERENCE DESIGNATIONS	
LAST USED	NOT USED
C58	
CR9	
L4	
Q5	
R64	R44
U47	
Y1	

Figure 12-2. Audio Synthesizer A6 Schematic Diagram (RTC-4011A)

Audio Synthesizer Module A6
RTC-4011A

Find No.	Qty. Req.	Part No.	Nomenclature	Part Value
001	1	84-P00445N001	PWB, AUDIO SYNTHESIZE	
002	1	07-P00499N001	BRACKET,PWB MTG	
003	4	MS20470AD4-5	RIVET	1/8X.312
004	AR	SN63WRMAP3	SOLDER	
005	AR	11-14167A01	INK	BLACK
006	2	5C84500B03	EYELET	
007	2	42C84284B01	RETAINER	
008	2	MS35206-214	SCREW,PH	4-40X.312
009	AR		ADHESIVE,SIL RUBBER	
C 001	1	23D84665F01	CAPACITOR	10UF-25V
C 002	1	23D84665F01	CAPACITOR	10UF-25V
C 003	1	23D84665F01	CAPACITOR	10UF-25V
C 004	1	23D84665F01	CAPACITOR	10UF-25V
C 005	1	21C82372C09	CAPACITOR	.1UF80-20-25
C 006	1	21C82372C09	CAPACITOR	.1UF80-20-25
C 007	1	21C82372C09	CAPACITOR	.1UF80-20-25
C 008	1	21D84494B04	CAPACITOR	100PF-5-500
C 009	1	21C82372C09	CAPACITOR	.1UF80-20-25
C 010	1	21C82372C09	CAPACITOR	.1UF80-20-25
C 011	1	21C82372C09	CAPACITOR	.1UF80-20-25
C 012	1	21R00863395	CAPACITOR	3000PF-2-500
C 013	1	21D84494B04	CAPACITOR	100PF-5-500
C 014	1	21C82372C09	CAPACITOR	.1UF80-20-25
C 015	1	21C82372C09	CAPACITOR	.1UF80-20-25
C 016	1	21C82372C09	CAPACITOR	.1UF80-20-25
C 017	1	21C82372C09	CAPACITOR	.1UF80-20-25
C 018	1	21C82372C09	CAPACITOR	.1UF80-20-25
C 019	1	08D84326A27	CAPACITOR	.0557UF-2-50
C 020	1	21D83596E32	CAPACITOR	1100PF-5-200
C 021	1	21C82372C09	CAPACITOR	.1UF80-20-25
C 022	1	21C82372C09	CAPACITOR	.1UF80-20-25
C 023	1	21C82372C09	CAPACITOR	.1UF80-20-25
C 024	1	21C82372C09	CAPACITOR	.1UF80-20-25
C 025	1	21C82372C09	CAPACITOR	.1UF80-20-25
C 026	1	21C82372C09	CAPACITOR	.1UF80-20-25
C 027	1	21C82372C09	CAPACITOR	.1UF80-20-25
C 028	1	21D84494B07	CAPACITOR	150PF-5-500
C 029	1	21D84494B16	CAPACITOR	330PF-5-500
C 030	1	21D84494B24	CAPACITOR	39PF-5-500
C 031	1	08D84326A48	CAPACITOR	.022UF-1-50
C 032	1	08D84326A48	CAPACITOR	.022UF-1-50
C 033	1	21C82372C09	CAPACITOR	.1UF80-20-25
C 034	1	21C82372C09	CAPACITOR	.1UF80-20-25
C 035	1	21C82372C09	CAPACITOR	.1UF80-20-25
C 036	1	21C82372C09	CAPACITOR	.1UF80-20-25
C 037	1	23D84665F01	CAPACITOR	10UF-25V
C 038	1	21C82372C09	CAPACITOR	.1UF80-20-25
C 039	1	21D84494B07	CAPACITOR	150PF-5-500
C 040	1	21D84494B07	CAPACITOR	150PF-5-500
C 041	1	21C82372C09	CAPACITOR	.1UF80-20-25
C 042	1	21C82372C09	CAPACITOR	.1UF80-20-25
C 043	1	23D83441B15	CAPACITOR	1.0UF-20-35
C 044	1	23D83441B15	CAPACITOR	1.0UF-20-35
C 045	1	08D84326A48	CAPACITOR	.022UF-1-50
C 046	1	21C82372C09	CAPACITOR	.1UF80-20-25
C 047	1	08D82096J08	CAPACITOR	.022UF-10-250
C 048	1	23D84665F01	CAPACITOR	10UF-25V
C 049	1	21D84494B30	CAPACITOR	34PF-5-500
C 050	1	23D84665F01	CAPACITOR	10UF-25V
C 051	1	23D84665F01	CAPACITOR	10UF-25V
C 052	1	21C82372C09	CAPACITOR	.1UF80-20-25
C 053	1	21D82187B14	CAPACITOR	1000PF-10-100
C 054	1	23D84665F01	CAPACITOR	10UF-25V

Find No.	Qty. Req.	Part No.	Nomenclature	Part Value
C 055	1	21C82372C09	CAPACITOR	.1UF80-20-25
C 056	1	21C82372C10	CAPACITOR	.05UF-20-25
C 057	1	21D84494B34	CAPACITOR	68PF-5-500
C 058	1	21D84494B34	CAPACITOR	68PF-5-500
C 059	1	21D82428B62	CAPACITOR	.01UF80-20-200
CR001	1	48-80345A80	DIODE,ZENER	2.4V-5-.5
CR002	1	48-80345A81	DIODE,ZENER	9V
CR003	1	48-84463K02	DIODE	
CR004	1	48-80345A81	DIODE,ZENER	9V
CR005	1	48-84463K02	DIODE	
CR006	1	48-84463K02	DIODE	
CR007	1	48-84463K02	DIODE	
CR008	1	48-84463K02	DIODE	
CR009	1	48-80345A94	DIODE,ZENER	10V
J 001	1	M39024/11-01	TEST POINT	
J 002	1	M39024/11-01	TEST POINT	
J 003	1	M39024/11-01	TEST POINT	
J 004	1	M39024/11-01	TEST POINT	
J 005	1	M39024/11-01	TEST POINT	
J 006	1	M39024/11-01	TEST POINT	
J 007	1	M39024/11-01	TEST POINT	
J 008	1	M39024/11-01	TEST POINT	
J 009	1	M39024/11-01	TEST POINT	
L 001	1	24-14198A55	COIL	470UH
L 002	1	24-14198A55	COIL	470UH
L 003	1	MS90539-03	INDUCTOR	330UH
L 004	1	MS90539-03	INDUCTOR	330UH
Q 001	1	48R00869571	TRANSISTOR	
Q 002	1	48R00869570	TRANSISTOR	
Q 003	1	48R00869570	TRANSISTOR	
Q 004	1	48R00869571	TRANSISTOR	
Q 005	1	48R00869570	TRANSISTOR	
R 001	1	6S124A73	RESISTOR	10K-5-1/4
R 002	1	6S124A73	RESISTOR	10K-5-1/4
R 003	1	6S124B06	RESISTOR	220K-5-1/4
R 004	1	6S124A73	RESISTOR	10K-5-1/4
R 005	1	6S124A29	RESISTOR	150-5-1/4
R 006	1	6S124A43	RESISTOR	560-5-1/4
R 007	1	6S124A51	RESISTOR	1.2K-5-1/4
R 008	1	6S124A47	RESISTOR	820-5-1/4
R 009	1	6S124A43	RESISTOR	560-5-1/4
R 010	1	6S124B22	RESISTOR	1M-5-1/4
R 011	1	6S124A97	RESISTOR	100K-5-1/4
R 012	1	6S124A49	RESISTOR	1K-5-1/4
R 013	1	6S124A67	RESISTOR	5.6K-5-1/4
R 014	1	6S124A83	RESISTOR	27K-5-1/4
R 015	1	6S124A77	RESISTOR	15K-5-1/4
R 016	1	06-10621D88	RESISTOR	100K-1-1/8
R 017	1	06-10621D56	RESISTOR	46.4K-1-1/8
R 018	1	06-10621C95	RESISTOR	11K-1-1/8
R 019	1	06-10621C43	RESISTOR	3.16K-1-1/8
R 020	1	6S124A73	RESISTOR	10K-5-1/4
R 021	1	6S124A80	RESISTOR	20K-5-1/4
R 022	1	6S124A65	RESISTOR	4.7K-5-1/4
R 023	1	6S124A73	RESISTOR	10K-5-1/4
R 024	1	6S124A49	RESISTOR	1K-5-1/4
R 025	1	6S124B18	RESISTOR	680K-5-1/4
R 026	1	6S124A97	RESISTOR	100K-5-1/4
R 027	1	6S124A97	RESISTOR	100K-5-1/4
R 028	1	6S124A70	RESISTOR	7.5K-5-1/4
R 029	1	6S124A69	RESISTOR	6.8K-5-1/4
R 030	1	06-10621D48	RESISTOR	38.3K-1-1/8
R 031	1	06-10621B50	RESISTOR	348-1-1/8
R 032	1	06-10621E05	RESISTOR	147K-1-1/8

Find No.	Qty. Req.	Part No.	Nomenclature	Part Value
R 033	1	6S124A62	RESISTOR	3.6K-5-1/4
R 034	1	6S124A53	RESISTOR	1.5K-5-1/4
R 035	1	6S124A65	RESISTOR	4.7K-5-1/4
R 036	1	6S124A69	RESISTOR	6.8K-5-1/4
R 037	1	6S124A53	RESISTOR	1500-5-1/4
R 038	1	6S124A43	RESISTOR	560-5-1/4
R 039	1	6S124A99	RESISTOR	120K-5-1/4
R 040	1	6S124A73	RESISTOR	10K-5-1/4
R 041	1	6S124A91	RESISTOR	56K-5-1/4
R 042	1	6S124A66	RESISTOR	5.1K-5-1/4
R 043	1	6S124A91	RESISTOR	56K-5-1/4
R 045	1	6S124A97	RESISTOR	100K-5-1/4
R 046	1	6S124A25	RESISTOR	100-5-1/4
R 047	1	6S124A25	RESISTOR	100-5-1/4
R 048	1	6S124A73	RESISTOR	10K-5-1/4
R 049	1	6S124A73	RESISTOR	10K-5-1/4
R 050	1	6S124A25	RESISTOR	100-5-1/4
R 051	1	6S124A25	RESISTOR	100-5-1/4
R 052	1	6S124A29	RESISTOR	150-5-1/4
R 053	1	6S124A73	RESISTOR	10K-5-1/4
R 054	1	6S124A73	RESISTOR	10K-5-1/4
R 055	1	6S124A25	RESISTOR	100-5-1/4
R 056	1	6S124A25	RESISTOR	100-5-1/4
R 057	1	6S124A49	RESISTOR	1K-5-1/4
R 058	1	6S124A66	RESISTOR	5.1K-5-1/4
R 059	1	6S124A73	RESISTOR	10K-5-1/4
R 060	1	6S124A73	RESISTOR	10K-5-1/4
R 061	1	6S124B38	RESISTOR	4.7M-5-1/4
R 063	1	6S124A67	RESISTOR	5.6K-5-1/4
R 064	1	6S124A67	RESISTOR	5.6K-5-1/4
R 065	1	6S124A77	RESISTOR	15K-5-1/4
U 001	1	51-80345A04	INTEGRATED CIRCUIT	
U 002	1	51-80345A04	INTEGRATED CIRCUIT	
U 003	1	51-80345A20	INTEGRATED CIRCUIT	
U 004	1	51-84887K30	INTEGRATED CIRCUIT	
U 005	1	51-84887K30	INTEGRATED CIRCUIT	
U 006	1	51-84118K31	INTEGRATED CIRCUIT	
U 007	1	51-80346A59S	INTEGRATED CIRCUIT	
U 008	1	51R84320A80	INTEGRATED CIRCUIT	
U 009	1	51-84887K54	INTEGRATED CIRCUIT	
U 010	1	51-84887K54	INTEGRATED CIRCUIT	
U 011	1	51-80345A47	INTEGRATED CIRCUIT	
U 012	1	51-84887K54	INTEGRATED CIRCUIT	
U 013	1	51-84887K54	INTEGRATED CIRCUIT	
U 014	1	51-84887K30	INTEGRATED CIRCUIT	
U 015	1	51-84887K30	INTEGRATED CIRCUIT	
U 016	1	51-84887K30	INTEGRATED CIRCUIT	
U 017	1	51-84887K30	INTEGRATED CIRCUIT	
U 018	1	51-84887K30	INTEGRATED CIRCUIT	
U 019	1	51-84887K73	INTEGRATED CIRCUIT	
U 020	1	51-84887K77	INTEGRATED CIRCUIT	
U 021	1	51R84320A80	INTEGRATED CIRCUIT	
U 022	1	51R84320A80	INTEGRATED CIRCUIT	
U 023	1	51-84887K73	INTEGRATED CIRCUIT	
U 024	1	51-84887K73	INTEGRATED CIRCUIT	
U 025	1	51R84320A80	INTEGRATED CIRCUIT	
U 026	1	51-84887K38	INTEGRATED CIRCUIT	
U 027	1	51-84887K38	INTEGRATED CIRCUIT	
U 028	1	51-84887K38	INTEGRATED CIRCUIT	
U 029	1	51-84887K38	INTEGRATED CIRCUIT	
U 030	1	51-84887K38	INTEGRATED CIRCUIT	
U 031	1	51-80345A01	INTEGRATED CIRCUIT	
U 032	1	51-84928F02	INTEGRATED CIRCUIT	
U 033	1	51-84887K77	INTEGRATED CIRCUIT	

Find No.	Qty. Req.	Part No.	Nomenclature	Part Value
U 034	1	51-84928F02	INTEGRATED CIRCUIT	
U 035	1	51-80345A16	INTEGRATED CIRCUIT	
U 036	1	51-84928F02	INTEGRATED CIRCUIT	
U 037	1	51-84887K10	INTEGRATED CIRCUIT	
U 038	1	51-80345A04	INTEGRATED CIRCUIT	
U 039	1	51-84887K10	INTEGRATED CIRCUIT	
U 040	1	51-84887K10	INTEGRATED CIRCUIT	
U 041	1	51-84887K10	INTEGRATED CIRCUIT	
U 042	1	51-84887K10	INTEGRATED CIRCUIT	
U 043	1	51-84887K10	INTEGRATED CIRCUIT	
U 044	1	51-84887K10	INTEGRATED CIRCUIT	
U 045	1	1-80714B64	INTEGRATED CIRCUIT	
U 046	1	51-80345A04	INTEGRATED CIRCUIT	
U 047	1	51-80345A04	INTEGRATED CIRCUIT	
Y 001	1	48-80346A07	CRYSTAL	1.048576MHZ

ASSEMBLY PARTS LIST

Audio Synthesizer

SECTION 13

PROCESSOR I/O MODULE (A7)

13-1. General. Frequency Counter and DVM functions with their processor interface as well as the processor interface for the two system control buses are contained on this module. Additionally, circuitry to complete the 10.245 MHz phase locked loop, and to zero beat the incoming carrier are also on this board. A block diagram of the processor I/O module is shown in figure 13-1 with its schematic shown in figure 13-2.

13-2. 10.245 MHz Phase Locked Loop. Only part of the circuitry for the second local oscillator loop is contained on this module. The 10.245 MHzVCO and the loop filter are on the received module. A sample of the 10.245 MHz second local oscillator is mixed with the SYNTH 10 MHz signal. A divide by fourty nine following the mixer divides the 245 kHz signal from the mixer to 5 kHz. A phase comparison between the 5 kHz from the divider and the SYNTH 5 kHz signal results in the 10.245 MHz VCO TV signal. The VCO TV signal is an error signal which is filtered by the loop filter on the receiver to correct the VCO frequency and maintain phase lock.

13-3. System Control Bus Interface. Interface between the processor buses and the system is through Peripheral Interface Adapters (PIA). The PIA is a sing le integrated circuit that provides 18 input/output latches which may either be read from or written into by the processor. Two additional inputs on the PIA provide for processor interrupt capability. The two system control buses utilize a single PIA.

13-4. Each system control bus consists of eight lines split into four data lines and four address lines. The address lines define the particular latch into which the data is to be stored, or the buffer from which data is to be obtained. One additional address line, the bus enable line, is required to enable the address decoding circuitry. Thus each control bus can have as many latches at one address as there are bus enable lines. The system utilizes one RF bus enable and two AF bus enables for a total control bus capability of 192 bits. The second bus enable for the AF control bus is on the processor card.

13-5. For internal timing ontonesequences.theprocessorisinterruptedevery10msec.When interrupted by the timing input the processor stops it current process, acknowledges the interrupt, increments its time counter and then combines as normal. The timing interrupt is the SYNTH 100 Hz input **to** the Bus PIA.

13-6. DVM. Inputs on the DVM to A/D signal line are digitized into a 10-bit digital word plus a sign bit and then input to the processor through the DVM PIA. An Absolute Value circuit converts the ±1 volt bipolar input signal to a 0-1 volt unipolar positive level with a separate digital output to indicate the sign of the input. An Analog to Digital Converter (A/D) converts the unipolar input into a 10-bit word under processor command. A pulse on the START line from the processor starts the A/D. When conversion is complete the A/D signals the processor on the END line. The processor in turn enables the output drivers on the A/D, sets the DVM/CNTR Buffer to the DVM mode, and inputs the 10bit word plus the signal bit.

13-7. For AC measurements a filter is switched on in the Absolute Value circuit so that its output is a DC level proportional to the average value of the input sinewave. Conversion to RMS is made in the processor by multiplying the average level by 1.11 to obtain the RMS level.

13-8. Frequency Counter. Three possible signal sources are available to the frequency counter for frequency determination. For external inputs the EXT FREQ CTR line from the Front Panel Interface module provides the input. Determination of the duplex frequency is accomplished by measuring the frequency of the offset oscillator on the OFFSET FREQ line. Monitor frequency error is determined from the IF/BFO FREQ line by comparing that frequency to 455 kHz. The desired signal is selected to the counter control by the Select Switch under processor control.

13-9. The Counter Control circuitry responds to a START pulse from the processor to gate the output of the Select Switch to the Accumulator for a time period determined by the Gate Time Generator. When the gate time has ended, or if the accumulator overflows, the Counter Control signals the processor on the END line that the count is complete. The processor in turn disables the A/D output drivers, switches the DVM/CNTR Buffer to the counter mode, and inputs the 16-bit accumulator information.

13-10. Gate times from 0.001 sec to 10 sec are generated by the Gate Time Generator. The SYNTH 1 kHz signal is the reference input for the generator. Selection of the gate time is by processor control to give a five digit or 0.1 Hz resolution frequency display.

13-11. Zero Beat. A zero beat with the incoming carrier is obtained by successively mixing the 455 kHz IF/BFO FREQ with 500 kHz, 50 kHz, and 5 kHz. The beat signal that results from the mixing drives the ground return circuit for the signal presence indicator.

13-12. Module Control. Control of this module is from the processor on the AF control bus. A four bit address (AF ADRS BUS 0-3) is decoded by the Address Decode circuitry to determine which Control Latch the control data is to be stored. The four data bits (AF DATA BUS 0-3) are then stored into the selected Control-Latch by a pulse on the AF BUS EN 2 signal line.

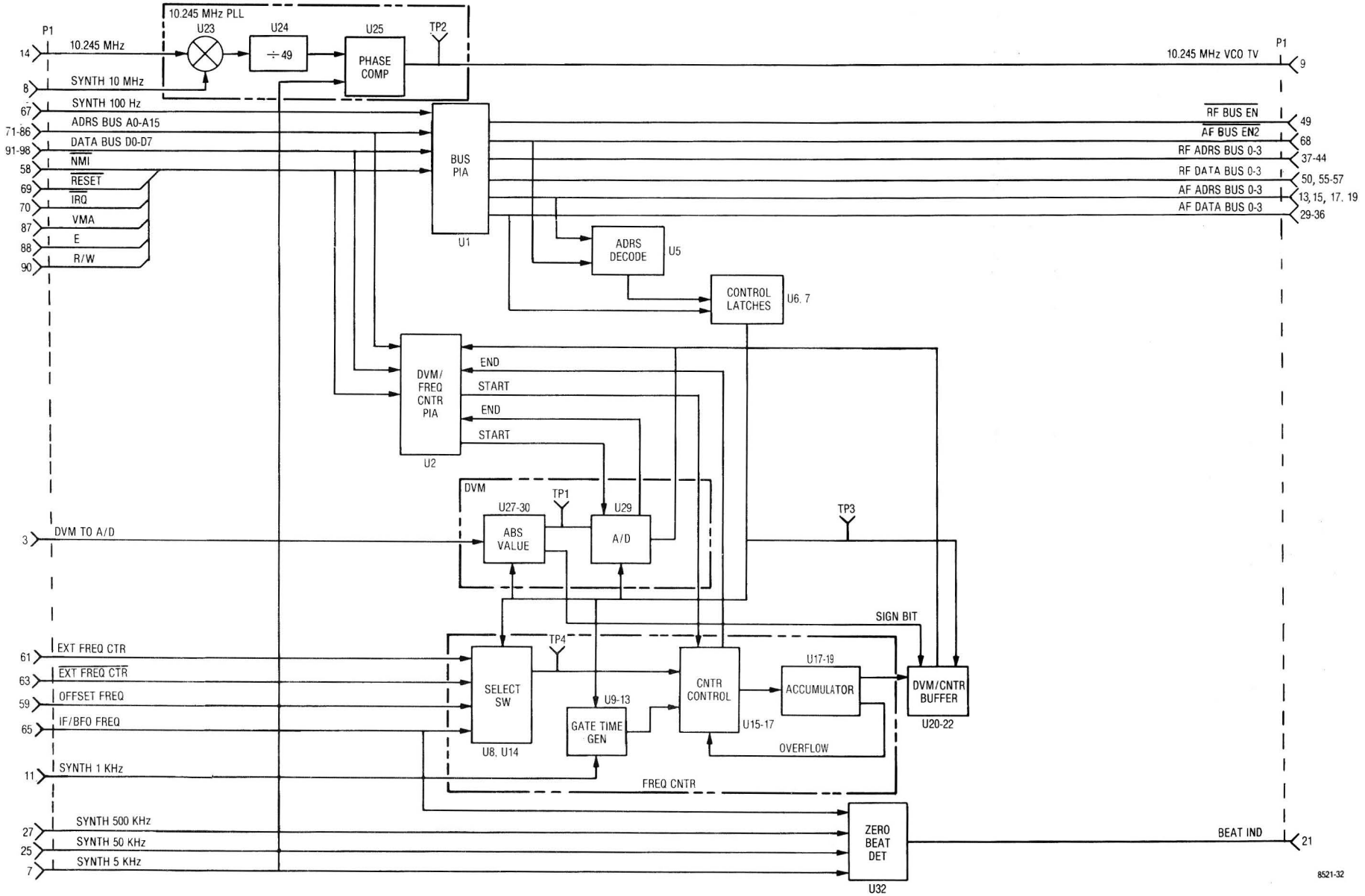

Figure 13-1. Processor I/O A7 Block Diagram

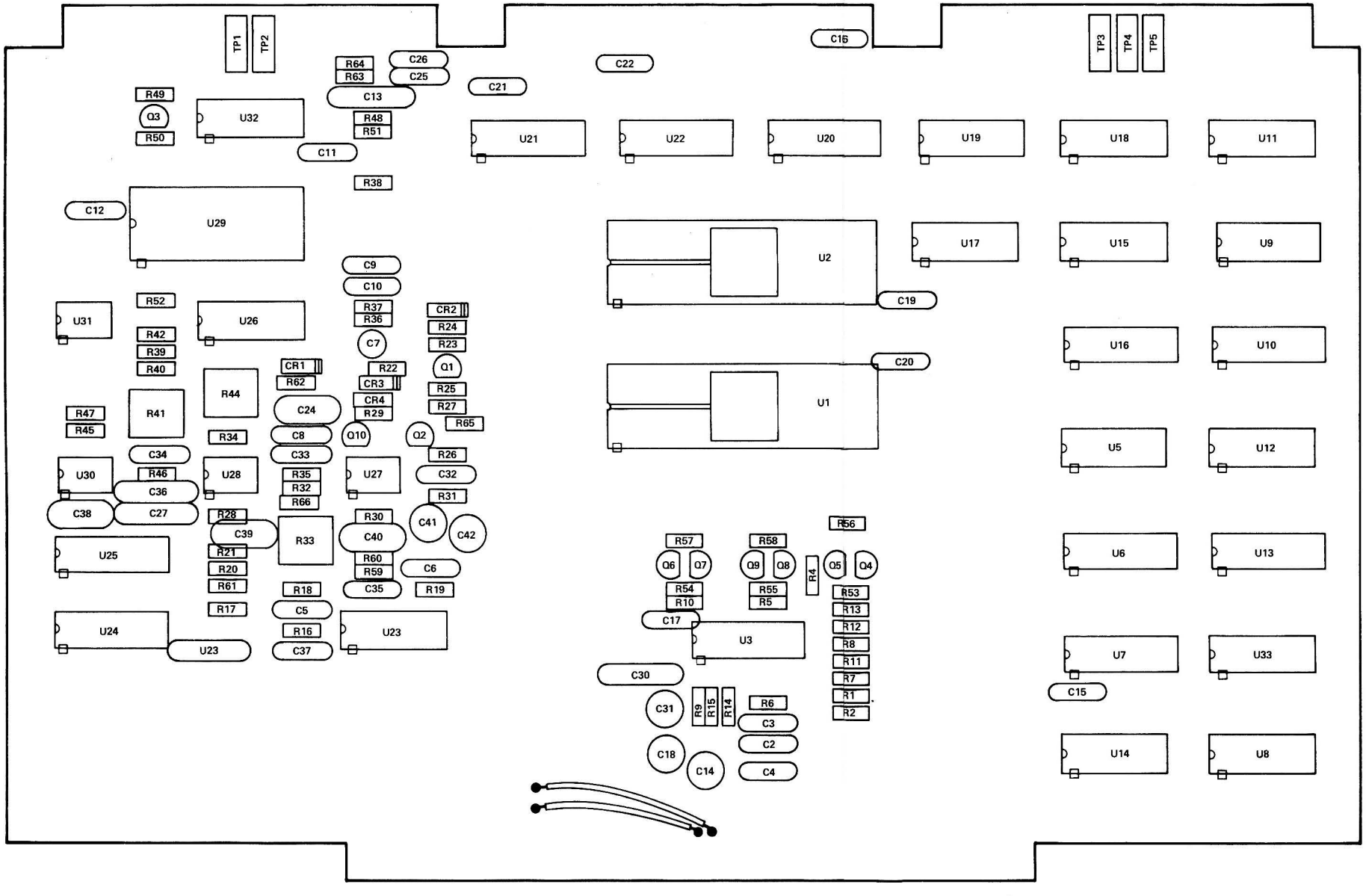

Figure 13-3. Processor I/O Parts Locator

NOTES:

1. PARTIAL REFERENCE DESIGNATIONS ARE SHOWN. FOR COMPLETE DESIGNATION PREFIX WITH A7.
2. FOR REFERENCE DRAWINGS REFER TO: 01-P00405N ASSEMBLY.
3. UNLESS OTHERWISE SPECIFIED: ALL RESISTORS ARE IN OHMS, ±5 PCT, 1/4 WATT. ALL CAPACITORS ARE IN UF. ALL VOLTAGES ARE DC.
4. DEVICE TYPE AND CONNECTIONS NOT SHOWN ON SYMBOLS ARE LISTED IN TABLE 1.

TABLE 1

REF DES	DEVICE TYPE	GND	+5V	-5V	+12V	-12V	NO CONN
U1	MC6821	1	20				
U2	MC6821	1	20				
U3	MC10116	8	1,16				
U5	MC14073	7	14				
U6	MC14042	8	16				
U7	MC14042	8	16				
U8	74LS00	7	14				
U9	MC14518	8	16				
U10	MC14518	8	16				
U11	MC14081	7	14				
U12	MC14081	7	14				
U13	MC14512	8	16				
U14	74LS00	7	14				
U15	74LS74	7	14				
U16	MC14027	8	16				
U17	74LS11	7	14				
U18	74LS197	7	14				
U19	MC14040	8	16				
U20	MC14503	8	16				
U21	MC14503	8	16				
U22	MC14503	8	16				
U23	74LS86	7	14				
U24	MC14569	8	16				
U25	MC14046	8	16				
U26	MC14016		14	7			
U27	LM308A				7	4	5
U28	LM308A				7	4	5
U29	8704	20	19	18			1, 2
U30	LM308A				7	4	5
U31	MC1403						4 THRU 8
U32	MC14070	7	14				
U33	MC14069	7	14				

REFERENCE DESIGNATIONS	
HIGHEST NUMBER USED	NOT USED
C36	C1, C28 THRU C29
CR5	
Q9	
RG6	R3, R43
U33	U4

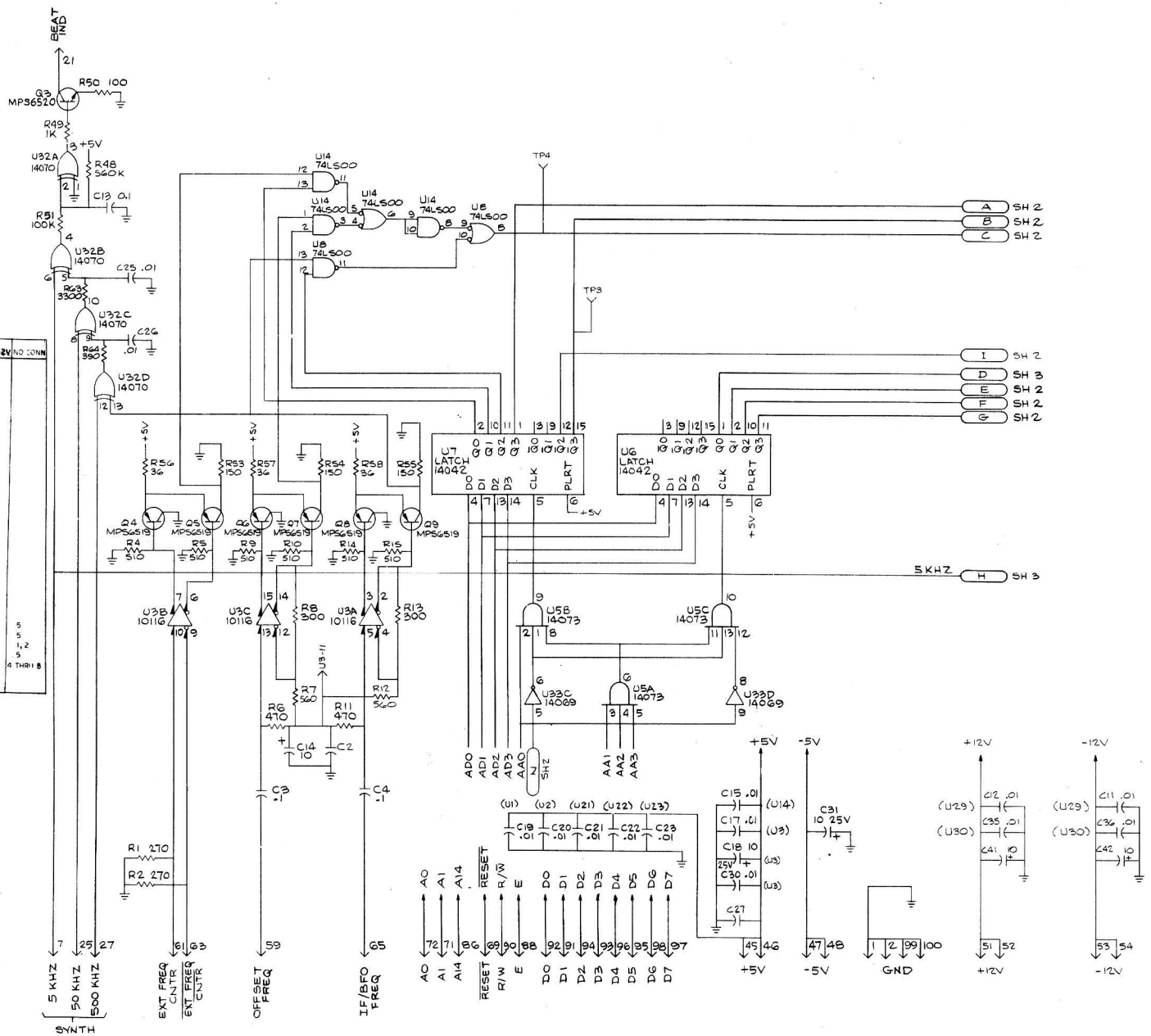

Figure 13-2. Processor I/O A7 Schematic Diagram (Sheet 1 of 3) (RTC-4012A)

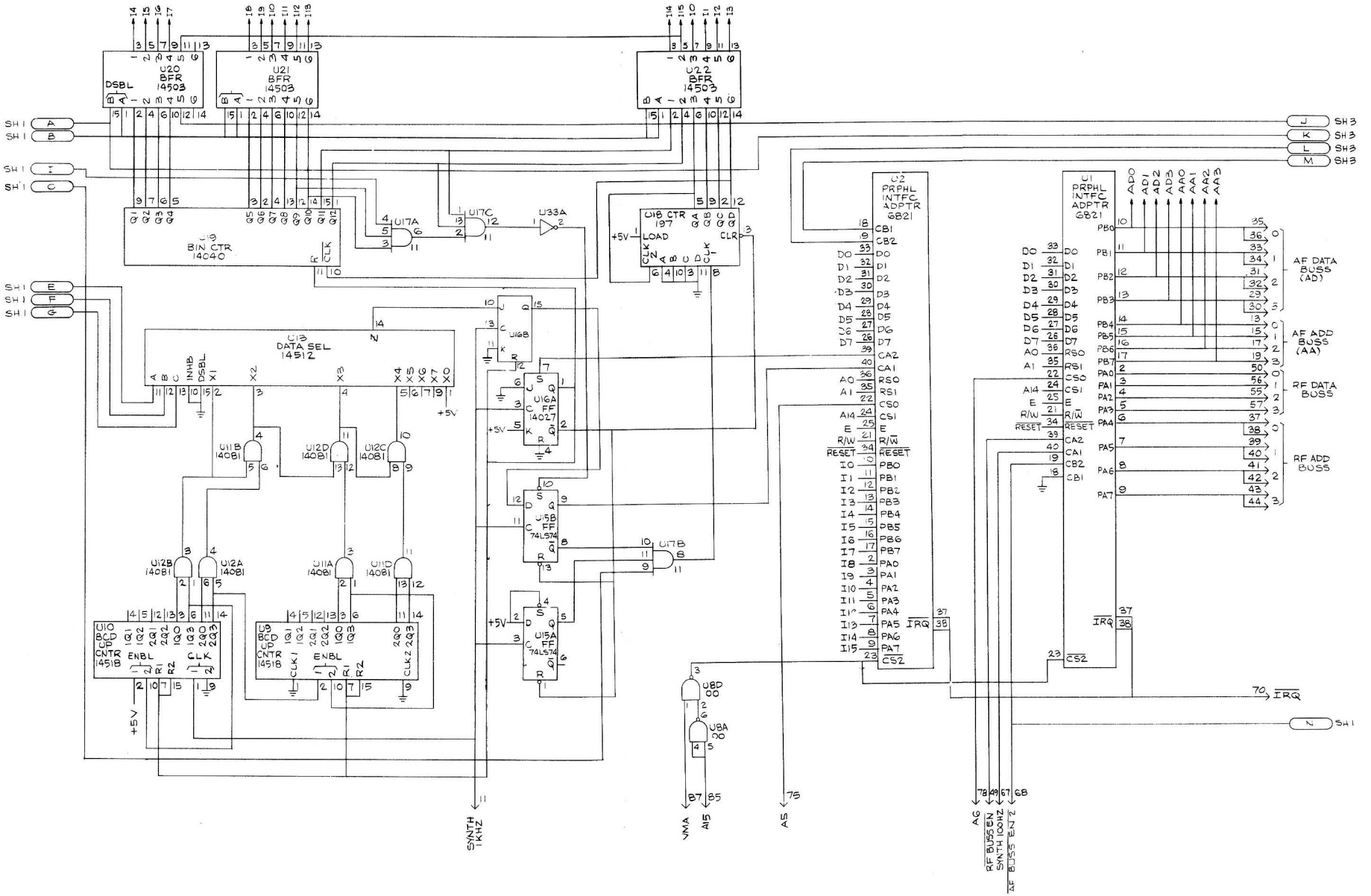

Figure 13-2. Processor I/O A7
Schematic Diagram (Sheet 2 of 3)
(RTC-4012A)

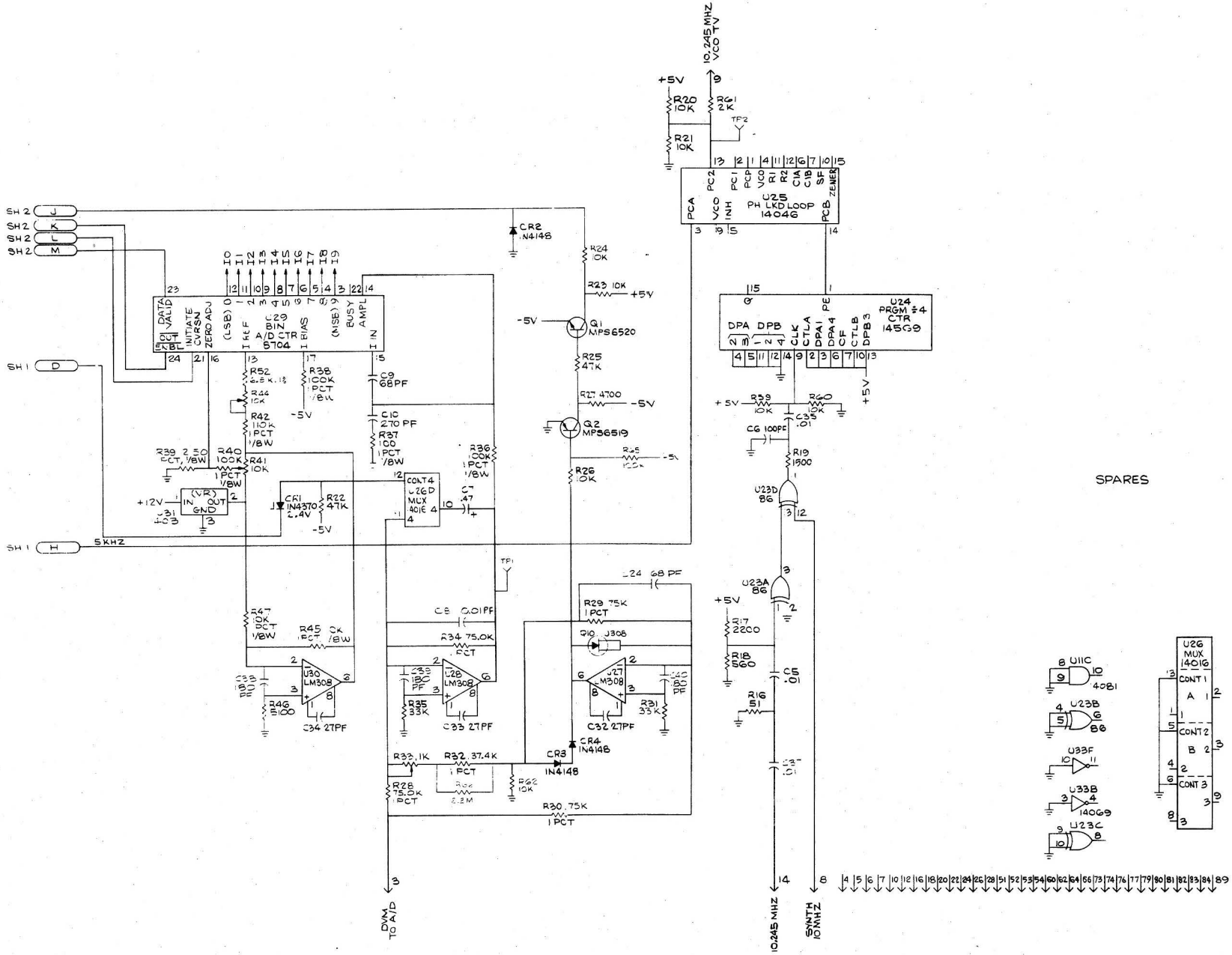

Figure 13-2. Processor I/O A7
Schematic Diagram (Sheet 3 of 3)
(RTC-4012A)

Processor Module A7
RTC-4012A

Find No.	Qty. Req.	Part No.	Nomenclature	Part Value
001	1	84-P00444N001	PWB, PROCESSOR I/0	
003	AR	SN63WRMAP3	SOLDER	
004	AR	11-14167A01	INK	BLACK
005	1	07-P00499N001	BRACKET,PWB MTG	
006	4	MS20470AD4-5	RIVET	1/8X.312
007	2	5C84500B03	EYELET	
008	2	42C84284B01	RETAINER	
009	2	MS35206-214	SCREW,PH	4-40X.312
010	AR		WIRE,INSULATED	26 WHITE
C 002	1	21C82372C09	CAPACITOR	.1UF80-20-25
C 003	1	21C82372C09	CAPACITOR	.1UF80-20-25
C 004	1	21C82372C09	CAPACITOR	.1UF80-20-25
C 005	1	21D82428B62	CAPACITOR	.01UF80-20-200
C 006	1	21D84494B04	CAPACITOR	100PF-5-500
C 007	1	23D84762H14	CAPACITOR	.47UF-20-50
C 008	1	21D82428B62	CAPACITOR	.01UF80-20-200
C 009	1	21D84494B34	CAPACITOR	68PF-5-500
C 010	1	21D82187B04	CAPACITOR	270PF-10-500
C 011	1	21D82428B62	CAPACITOR	.01UF80-20-200
C 012	1	21D82428B62	CAPACITOR	.01UF80-20-200
C 013	1	21C82372C09	CAPACITOR	.1UF80-20-25
C 014	1	23D84665F01	CAPACITOR	10UF-25V
C 015	1	21D82428B62	CAPACITOR	.01UF80-20-200
C 016	1	21D82428B62	CAPACITOR	.01UF80-20-200
C 017	1	21D82428B62	CAPACITOR	.01UF80-20-200
C 018	1	23D84665F01	CAPACITOR	10UF-25V
C 019	1	21D82428B62	CAPACITOR	.01UF80-20-200
C 020	1	21D82428B62	CAPACITOR	.01UF80-20-200
C 021	1	21D82428B62	CAPACITOR	.01UF80-20-200
C 022	1	21D82428B62	CAPACITOR	.01UF80-20-200
C 023	1	21C82372C09	CAPACITOR	.1UF80-20-25
C 024	1	21D84494B34	CAPACITOR	68PF-5-500
C 025	1	21D82428B62	CAPACITOR	.01UF80-20-200
C 026	1	21D82428B62	CAPACITOR	.01UF80-20-200
C 027	1	21C82372C09	CAPACITOR	.1UF80-20-25
C 030	1	21C82372C09	CAPACITOR	.1UF80-20-25
C 031	1	23D84665F01	CAPACITOR	10UF-25V
C 032	1	21D84494B42	CAPACITOR	27PF-5-500
C 033	1	21D84494B42	CAPACITOR	27PF-5-500
C 034	1	21D84494B42	CAPACITOR	27PF-5-500
C 035	1	21D82428B62	CAPACITOR	.01UF80-20-200
C 036	1	21C82372C09	CAPACITOR	.1UF80-20-25
C 037	1	21D82428B62	CAPACITOR	.01UF80-20-200
C 038	1	21D84494B46	CAPACITOR	180PF-3-500
C 039	1	21D84494B46	CAPACITOR	180PF-3-500
C 040	1	21D84494B46	CAPACITOR	180PF-3-500
C 041	1	23D84665F01	CAPACITOR	10UF-25V
C 042	1	23D84665F01	CAPACITOR	10UF-25V
CR001	1	48-83819K44	DIODE, ZENER	2.4V-10-.4
CR002	1	48-84463K02	DIODE	
CR003	1	48-84463K02	DIODE	
CR004	1	48-84463K02	DIODE	
J 001	1	M39024/11-01	JACK,TIP	WHITE
J 002	1	M39024/11-01	JACK,TIP	WHITE
J 003	1	M39024/11-01	JACK,TIP	WHITE
J 004	1	M39024/11-01	JACK,TIP	WHITE
J 005	1	M39024/11-01	JACK,TIP	WHITE
Q 001	1	48R00869570	TRANSISTOR	
Q 002	1	48R00869571	TRANSISTOR	
Q 003	1	48R00869570	TRANSISTOR	
Q 004	1	48R00869571	TRANSISTOR	
Q 005	1	48R00869571	TRANSISTOR	
Q 006	1	48R00869571	TRANSISTOR	
Q 007	1	48R00869571	TRANSISTOR	
Q 008	1	48R00869571	TRANSISTOR	
Q 009	1	48R00869571	TRANSISTOR	
Q 010	1	48-80335A79	TRANSISTOR	
R 001	1	6S124A35	RESISTOR	270-5-1/4
R 004	1	6S124A42	RESISTOR	510-5-1/4
R 005	1	6S124A42	RESISTOR	510-5-1/4
R 006	1	6S124A41	RESISTOR	470-5-1/4
R 007	1	6S124A43	RESISTOR	560-5-1/4
R 008	1	6S124A36	RESISTOR	300-5-1/4
R 009	1	6S124A42	RESISTOR	510-5-1/4
R 010	1	6S124A42	RESISTOR	510-5-1/4
R 011	1	6S124A41	RESISTOR	470-5-1/4
R 012	1	6S124A43	RESISTOR	560-5-1/4
R 013	1	6S124A36	RESISTOR	300-5-1/4
R 014	1	6S124A42	RESISTOR	510-5-1/4
R 015	1	6S124A42	RESISTOR	510-5-1/4
R 016	1	6S124A18	RESISTOR	51-5-1/4
R 017	1	6S124A57	RESISTOR	2.2K-5-1/4
R 018	1	6S124A43	RESISTOR	560-5-1/4
R 019	1	6S124A53	RESISTOR	1.5K-5-1/4
R 020	1	6S124A73	RESISTOR	10K-5-1/4
R 021	1	6S124A73	RESISTOR	10K-5-1/4
R 022	1	6S124A89	RESISTOR	47K-5-1/4
R 023	1	6S124A73	RESISTOR	10K-5-1/4
R 024	1	6S124A73	RESISTOR	10K-5-1/4
R 025	1	6S124A89	RESISTOR	47K-5-1/4
R 026	1	6S124A73	RESISTOR	10K-5-1/4
R 027	1	6S124A65	RESISTOR	4.7K-5-1/4
R 028	1	06D83175C72	RESISTOR	75K-1-1/4
R 029	1	06D83175C72	RESISTOR	75K-1-1/4
R 030	1	06D83175C72	RESISTOR	75K-1-1/4
R 031	1	6S124A85	RESISTOR	33K-5-1/4
R 032	1	06D83175C51	RESISTOR	37.4K-1-1/4
R 033	1	18D83452F01	RESISTOR,VARIABLE	2K
R 034	1	06D83175C72	RESISTOR	75K-1-1/4
R 035	1	6S124A85	RESISTOR	33K-5-1/4
R 036	1	06-10621D88	RESISTOR	100K-1-1/8
R 037	1	06-10621A97	RESISTOR	100-1-1/8
R 038	1	06-10621D88	RESISTOR	100K-1-1/8
R 039	1	06-10621C27	RESISTOR	2150-1-1/8
R 040	1	06-10621D88	RESISTOR	100K-1-1/8
R 041	1	18D83452F13	RESISTOR,VARIABLE	10K
R 042	1	06D84444A75	RESISTOR	110K-1-1/4
R 044	1	18D83452F13	RESISTOR,VARIABLE	10K
R 045	1	06-10621C91	RESISTOR	10K-1-1/8
R 046	1	06-10621C63	RESISTOR	5.11K-1-1/8
R 047	1	06-10621C91	RESISTOR	10K-1-1/8
R 048	1	6S124B16	RESISTOR	560K-5-1/4
R 049	1	6S124A49	RESISTOR	1K-5-1/4
R 050	1	6S124A25	RESISTOR	100-5-1/4
R 051	1	6S124A97	RESISTOR	100K-5-1/4
R 052	1	06-10621F55	RESISTOR	6.81K-1-1/8
R 053	1	6S124A29	RESISTOR	150-5-1/4
R 054	1	6S124A29	RESISTOR	150-5-1/4
R 055	1	6S124A29	RESISTOR	150-5-1/4
R 056	1	6S124A14	RESISTOR	36-5-1/4
R 057	1	6S124A14	RESISTOR	36-5-1/4
R 058	1	6S124A14	RESISTOR	36-5-1/4
R 059	1	6S124A73	RESISTOR	10K-5-1/4
R 060	1	6S124A73	RESISTOR	10K-5-1/4
R 061	1	6S124A56	RESISTOR	2.0K-5-1/4
R 062	1	6S124A73	RESISTOR	10K-5-1/4
R 063	1	6S124A61	RESISTOR	3.3K-5-1/4
R 064	1	6S124A39	RESISTOR	390-5-1/4
R 065	1	6S124A99	RESISTOR	120K-5-1/4
R 066	1	6S124B22	RESISTOR	1M-5-1/4
R 067	S01	6S124B38	RESISTOR	4.7M-5-1/4
R 067	S01	6S124B30	RESISTOR	2.2M-5-1/4
R 068	S01	6S124B38	RESISTOR	4.7M-5-1/4
R 068	S01	6S124B30	RESISTOR	2.2M-5-1/4
U 001	1	51-82807K03	INTEGRATED CIRCUIT	
U 002	1	51-82807K03	INTEGRATED CIRCUIT	
U 003	1	51-80323A60	INTEGRATED CIRCUIT	
U 005	1	51-84887K28	INTEGRATED CIRCUIT	
U 006	1	51-84887K10	INTEGRATED CIRCUIT	
U 007	1	51-84887K10	INTEGRATED CIRCUIT	
U 008	1	51-84118K06	INTEGRATED CIRCUIT	
U 009	1	51-84887K23	INTEGRATED CIRCUIT	
U 010	1	51-84887K23	INTEGRATED CIRCUIT	
U 011	1	51-84887K75	INTEGRATED CIRCUIT	
U 012	1	51-84887K75	INTEGRATED CIRCUIT	
U 013	1	51-8288F39	INTEGRATED CIRCUIT	
U 014	1	51-84118K06	INTEGRATED CIRCUIT	
U 015	1	51-84118K01	INTEGRATED CIRCUIT	
U 016	1	51-84887K21	INTEGRATED CIRCUIT	
U 017	1	51-80346A56S	INTEGRATED CIRCUIT	
U 018	1	51-84118K52	INTEGRATED CIRCUIT	
U 019	1	MC14040BCP	INTEGRATED CIRCUIT	
U 020	1	51-84887K71	INTEGRATED CIRCUIT	
U 021	1	51-84887K71	INTEGRATED CIRCUIT	
U 022	1	51-84887K71	INTEGRATED CIRCUIT	
U 023	1	51-84118K21	INTEGRATED CIRCUIT	
U 024	1	51-84887K78	INTEGRATED CIRCUIT	
U 025	1	51-80345A19	INTEGRATED CIRCUIT	
U 026	1	51-80345A17	INTEGRATED CIRCUIT	
U 027	1	51-80345A26	INTEGRATED CIRCUIT	
U 028	1	51-80345A26	INTEGRATED CIRCUIT	
U 029	1	51-80345A36	INTEGRATED CIRCUIT	
U 030	1	51-80345A26	INTEGRATED CIRCUIT	
U 031	1	51-80345A18	INTEGRATED CIRCUIT	
U 032	1	51-84887K54	INTEGRATED CIRCUIT	
U 033	1	51-84887K11	INTEGRATED CIRCUIT	

ASSEMBLY PARTS LIST
Processor I/O

SECTION 14

IEEE INTERFACE MODULE (A8)

14-1. **General.** Remote control of the system is possible using a IEEE-488 bus and the IEEE Interface Module. The Interface Module provides the interface for the 488 bus and provides for processor control of most of the functions normally controlled from the front panel. A block diagram of the IEEE Interface Module is shown in figure 14-1 with its schematic shown in figure 14-2. See section 22 for information on the use of the IEEE Bus for system control.

14-2. IEEE **Bus Interface.** Bus buffering and interface protocol as defined by the IEEE-488 specification is provided for by.the IEEE Bus Interface circuit. The system processor accesses the interface directly through its address', data, and control buses for reading from or writing to the IEEE bus.

14-3. **RF Level Control.** The RF Level Control circuitry selects between the 5 VDC + AM MOD or the AM MOD + DCREF(I) input for remote or local control respectively. For remote control the 5 VDC + AM MOD input is electronically attenuated to provide the requested RF output level. For local control the attenuator is programmed for unity gain so that the AM MOD + DC REF (I) signal from the front panel RF level potentiometer controls the RF output level.

14-4. For the IEEE control option, a electronically programmable RF step attenuator is installed in the system. Control of the attenuator is then from the processor through the Address Decode and Control Latch circuitry on the Interface Module.

14-5. Modulation Control. Each of the three modulation sources are individually controllable by the IEEE Bus Interface module. For remote control the respective modulation input (INT MOD (I), EXT MOD (I), and 1 kHz SINE) is switched to a programmable attenuator. The system processor selects the level of attenuation necessary to provide the requested level of modulation. For local control the attenuators are programmed for unity gain and the respective modulation signal from the front panel level control (INTMODRTN (I), EXT MOD RTN (I), and 1 kHz SINE RTN (I)) is selected to the attenuator to provide modulation level control.

14-6. Address Decode and Control Latches. The system processor has direct control over the programmable attenuators on the module with the Address Decode and Control Latch circuitry. Control data on the data bus (DO-D7) is latched at the Control Latch indicated by the address bus (AO-A15).

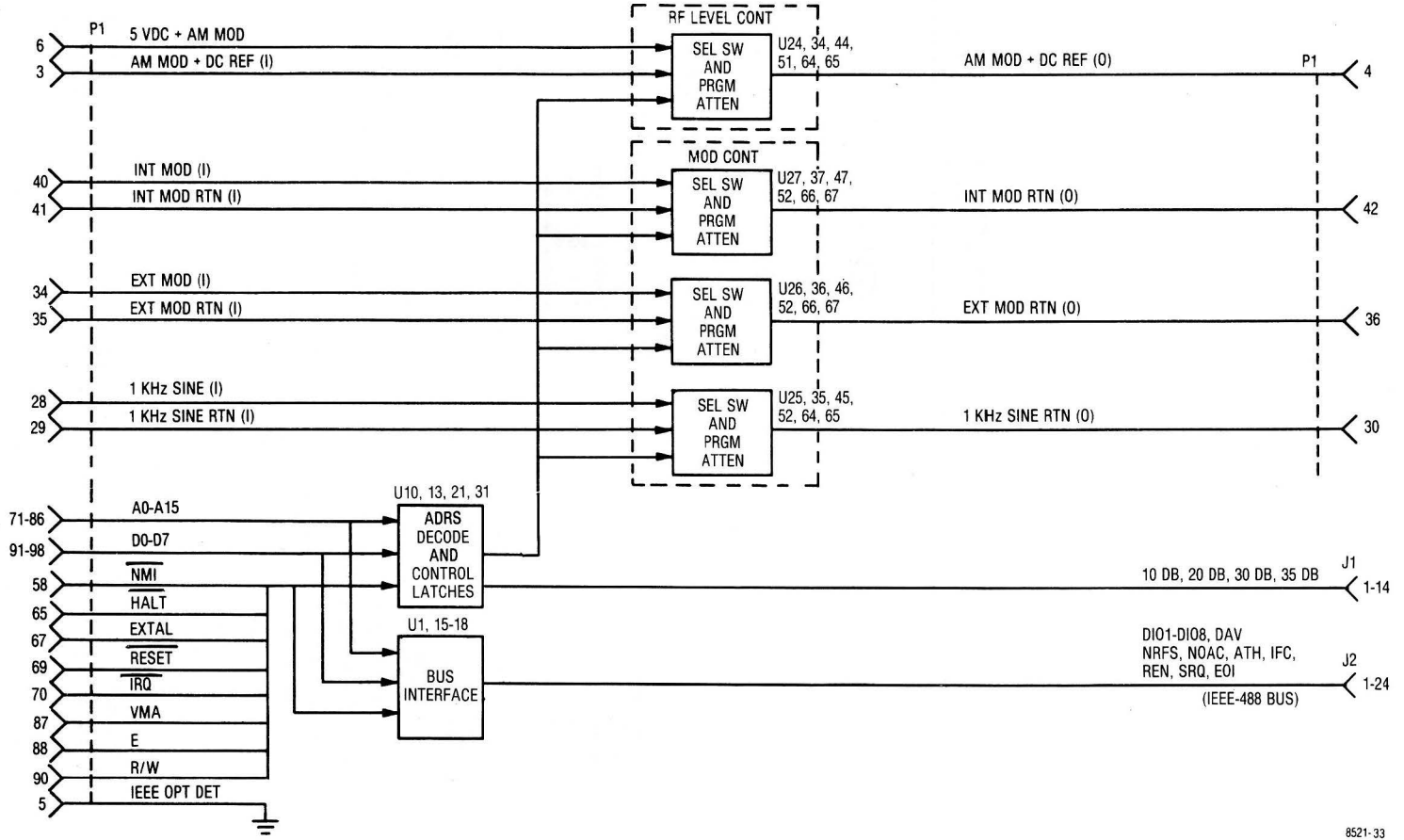

Figure 14-1. IEEE Interface Module A8 Block Diagram

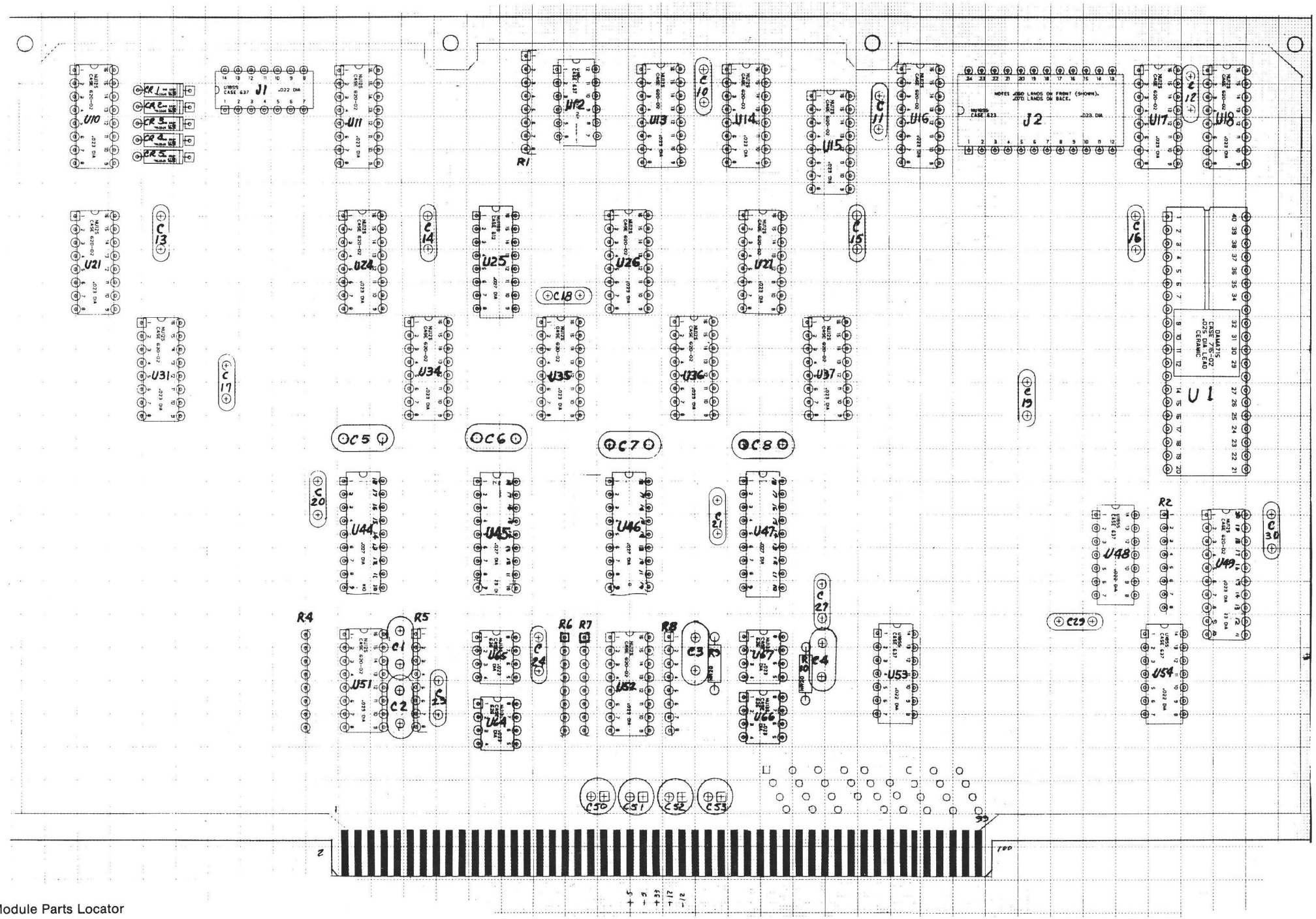

Figure 14-3. IEEE Interface Module Parts Locator

NOTES:

1. PARTIAL REFERENCE DESIGNATIONS ARE SHOWN. FOR COMPLETE DESIGNATION PREFIX WITH A8
2. FOR REFERENCE DRAWINGS REFER TO: 01-F0025014
3. UNLESS OTHERWISE SPECIFIED: ALL RESISTORS ARE IN OHMS, ±5 PCT, 1/4 WATT. ALL CAPACITORS ARE IN UF. ALL VOLTAGES ARE DC.

REF DES	TYPE	GND	+5V	-5V	+12V	-12V	+33V	NO CONN
U1	MC68488	1,2,40	19,20					15,24
U10	UDN6116A	1,8			9			15,16,2
U11	74LS365	8	16					
U12	2016-6		7 THRU 12					
U13	74LS138	8	6,16					12,13,7,9,10,11
U14	74LS138	8,8	16					
U15	MC3448	4,8,12	16					
U16	MC3448	4,8,12	16					
U17	MC3448	4,8,12,15	16					
U18	MC3448	4,7,8,12	9,16					
U21	MC14174	8	1,16					12,15
U24	MC14174	8	1,16					
U25	MC14174	8	1,16					
U26	MC14174	8	1,16					
U27	MC14174	8	1,16					
U31	MC14174	8	1,16					2,10,12,5,7
U34	MC14174	8	1,16					
U35	MC14174	8	1,16					
U36	MC14174	8	1,16					
U37	MC14174	8	1,16					
U44	AD7531	2,3			16			
U45	AD7531	2,3			16			
U46	AD7531	2,3			16			
U47	AD7531	2,3			16			
U48	74LS11	7	1,14					3,4,5,6
U49	74LS245	10	20					
U51	MC14053	6,8	16	7				1,2,3,4,5,6,15
U52	MC14053	6,8	16	7				
U53	74LS04	7	14					1,2,3,4,5,6,12,13
U54	74LS10	7	14					8,9,10,11
U64	CA3240				8	4		
U65	CA3240				8	4		
U66	CA3240				8	4		
U67	CA3240				8	4		

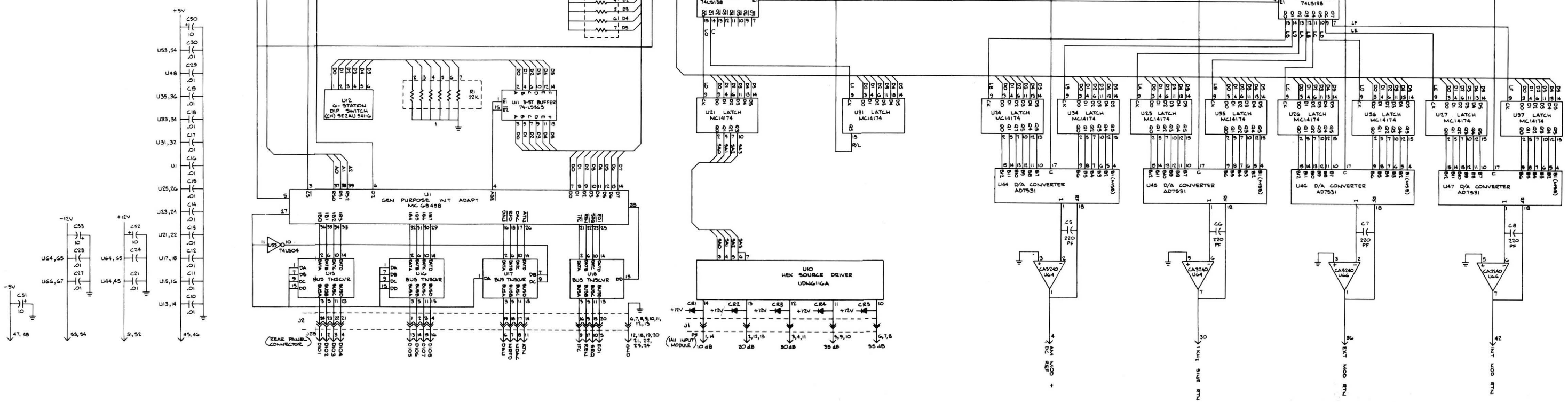

Figure 14-2. IEEE Interface Module A8 Schematic Diagram RTC-4013A)

IEEE Interface Module A8
RTC-4013A

Find No.	Qty. Req.		Part No.	Nomenclature	Part Value
PZ.BLP	TLS		80077 8009700000	0IBM OS/VS 370	
F00800	008	30PZB	68035		
001	1		84-P00204N001	PWB,IEEE INTERFACE	
002	AR		SN63WRMAP3	SOLDER	
003	AR		11-14167A01	INK	BLACK
004	1		07-P00499N001	BRACKET,PWB MTG	
005	4		MS20470AD4-5	RIVET	1/8X.312
006	2	01537	5C84500B03	EYELET	
007	2	01537	42C84284B01	RETAINER	
008	2		MS35206-214	SCREW	4-40X.312
009	AR			WIRE	26
C 001	1	01537	21D82187B49	CAPACITOR	150PF-10-500
C 002	1	01537	21D82187B49	CAPACITOR	150PF-10-500
C 003	1	01537	21D82187B49	CAPACITOR	150PF-10-500
C 004	1	01537	21D82187B49	CAPACITOR	150PF-10-500
C 005	1	01537	21D82187B08	CAPACITOR	220PF-10-500
C 006	1	01537	21D82187B08	CAPACITOR	220PF-10-500
C 007	1	01537	21D82187B08	CAPACITOR	220PF-10-500
C 008	1	01537	21D82187B08	CAPACITOR	220PF-10-500
C 010	1	01537	21D82428B62	CAPACITOR	.01UF80-20-200
C 011	1	01537	21D82428B62	CAPACITOR	.01UF80-20-200
C 012	1	01537	21D82428B62	CAPACITOR	.01UF80-20-200
C 013	1	01537	21D82428B62	CAPACITOR	.01UF80-20-200
C 014	1	01537	21D82428B62	CAPACITOR	.01UF80-20-200
C 015	1	01537	21D82428B62	CAPACITOR	.01UF80-20-200
C 016	1	01537	21D82428B62	CAPACITOR	.01UF80-20-200
C 017	1	01537	21D82428B62	CAPACITOR	.01UF80-20-200
C 018	1	01537	21D82428B62	CAPACITOR	.01UF80-20-200
C 019	1	01537	21D82428B62	CAPACITOR	.01UF80-20-200
C 020	1	01537	21D82428B62	CAPACITOR	.01UF80-20-200
C 021	1	01537	21D82428B62	CAPACITOR	.01UF80-20-200
C 023	1	01537	21D82428B62	CAPACITOR	.01UF80-20-200
C 024	1	01537	21D82428B62	CAPACITOR	.01UF80-20-200
C 027	1	01537	21D82428B62	CAPACITOR	.01UF80-20-200
C 029	1	01537	21D82428B62	CAPACITOR	.01UF80-20-200
C 030	1	01537	21D82428B62	CAPACITOR	.01UF80-20-200
C 050	1	01537	23D84665F01	CAPACITOR	10UF-25V
C 051	1	01537	23D84665F01	CAPACITOR	10UF-25V
C 052	1	01537	23D84665F01	CAPACITOR	10UF-25V
C 053	1	01537	23D84665F01	CAPACITOR	10UF-25V
CR001	1		48-84463K02	DIODE25V	
CR002	1		48-84463K02	DIODE25V	
CR003	1		48-84463K02	DIODE25V	
CR004	1		48-84463K02	DIODE25V	
CR005	1		48-84463K02	DIODE25V	
J 001	1	01537	09-80313A09	SOCKET	14 PIN
J 002	1	82647	C9524-01	SOCKET	24 PIN
R 001	1		784-1-1.0K	RESISTOR NETWORK	HEX SIP
R 002	1		784-1-R22K	RESISTOR NETWORK	HEX SIP
R 004	1		784-3-R22K	RESISTOR NETWORK	QUAD SIP
R 005	1		784-3-R22K	RESISTOR NETWORK	QUAD SIP
R 006	1		784-3-R22K	RESISTOR NETWORK	QUAD SIP
R 007	1		784-3-R22K	RESISTOR NETWORK	QUAD SIP
R 008	1		784-3-R22K	RESISTOR NETWORK	QUAD SIP
R 009	1		06-10621D25	RESISTOR	22.1K-1-1/8
R 010	1		06-10621D25	RESISTOR1/8	22.1K-1-1/8
U 001	1	04713	51-80346A52	INTEGRATED CIRCUIT	
U 010	1	56289	51-80346A63	INTEGRATED CIRCUIT	
U 011	1	04713	51-80346A60	INTEGRATED CIRCUIT	
U 012	1	71450	206-6	SWITCH, 6 STATION	
U 013	1	04713	51-80346A57	INTEGRATED CIRCUIT	
U 014	1	04713	51-80346A57	INTEGRATED CIRCUIT	
U 015	1	04713	51-80346A51	INTEGRATED CIRCUIT	
U 016	1	04713	51-80346A51	INTEGRATED CIRCUIT	
U 017	1	04713	51-80346A51	INTEGRATED CIRCUIT	
U 018	1	04713	51-80346A51	INTEGRATED CIRCUIT	
U 021	1	04713	51-80346A50	INTEGRATED CIRCUIT	
U 024	1	04713	51-80346A50	INTEGRATED CIRCUIT	
U 025	1	04713	51-80346A50	INTEGRATED CIRCUIT	
U 026	1	04713	51-80346A50	INTEGRATED CIRCUIT	
U 027	1	04713	51-80346A50	INTEGRATED CIRCUIT	
U 031	1	04713	51-80346A50	INTEGRATED CIRCUIT	
U 034	1	04713	51-80346A50	INTEGRATED CIRCUIT	
U 035	1	04713	51-80346A50	INTEGRATED CIRCUIT	
U 036	1	04713	51-80346A50	INTEGRATED CIRCUIT	
U 037	1	04713	51-80346A50	INTEGRATED CIRCUIT	
U 044	1	32293	51-80345A98	INTEGRATED CIRCUIT	
U 045	1	32293	51-80345A98	INTEGRATED CIRCUIT	
U 046	1	32293	51-80345A98	INTEGRATED CIRCUIT	
U 047	1	32293	51-80345A98	INTEGRATED CIRCUIT	
U 048	1	04713	51-80346A56	INTEGRATED CIRCUIT	
U 049	1	04713	51-80346A58	INTEGRATED CIRCUIT	
U 051	1	04713	51-5467G01	INTEGRATED CIRCUIT	
U 052	1	04713	51-5467G01	INTEGRATED CIRCUIT	
U 053	1	04713	51-80346A59	INTEGRATED CIRCUIT	
U 054	1	04713	51-80346A55	INTEGRATED CIRCUIT	
U 064	1	18714	51-80345A04	INTEGRATED CIRCUIT	
U 065	1	18714	51-80345A04	INTEGRATED CIRCUIT	
U 066	1	18714	51-80345A04	INTEGRATED CIRCUIT	
U 067	1	18714	51-80345A04	INTEGRATED CIRCUIT	
	1		51-80345A12	INTEGRATED CIRCUIT	
	1		30-P04146T001	CABLE ASSEMBLY,IEEE	14 PIN
	1		30-P04147T001	CABLE ASSEMBLY,IEEE	
	2		03-15013G11	SCREW	2-56X5/16
	2		42-P06849R002	STRAP,CABLE CLAMP	
	1		57-30240	CONNECTOR	
	1		C9524-01	SOCKET	24 PIN
	1		40-P04127T001	WAFER SWITCH, 14 POS	
	1		01-80304A54	CABLE ASSEMBLY	16PIN-101N-END
	2		MS35206-213	SCREW,PH	4-40X.250
	4		MS35338-40	WASHER,LOCK	NO.4
	2		MS27183-3	WASHER,FLAT	NO.4
	1		30-P04125T001	CABLE ASSEMBLY,FRONT	
	1		30-P04126T001	CABLE ASSEMBLY, REAR	
	4		4545-440-A-9	STANDOFF	4-40X1.18
	1		67-P04122T001	BLOWER MODIFICATION K	
	2		MS35338-39	WASHER,LOCK	NO.2
	2		MS27183-2	WASHER,FLAT	NO.2
	2		5610-6-31	WASHER,PLAIN	N0.2

ASSEMBLY PARTS LIST

IEEE Interface Module

SECTION 15

PROCESSOR MODULE (A9)

15-1 General. Primary control and data manipulation requirements of the system are performed by the microprocessor on the Processor Module. Input and output information is carried along the processor's address, data, and control buses, or displayed on the CRT through the character generator circuits on the Processor Module. A block diagram of the Processor Module is shown in figure 15-1 with its schematic shown in figure 15-2.

15-2. Processor. A Motorola MC6802 microprocessor is the central part of the processor. The microprocessor then accesses and controls the rest of the processor via three signal buses. The sixteen bit address bus (AO-A15) determines which device on the bus the microprocessor will access. Data that will be read from or written to the accessed device is contained on the seven bit data bus (DO-D7). Synchronization of the data transfer and several specialized processor functions are provided by the control bus (HALT, NMI, RESET, IRQ, VMA, E, and R/W).

15-3. The series of commands that direct the microprocessor's actions (software) is contained in the 16Kx 8 ROM (Read Only Memory). A standard unit has 12K x8 ROM for the main program. With the IEEE option an additional 4K x 8 ROM is added to provide the extra program required.

15-4. Temporary storage of microprocessor data is provided by 1Kx8 RAM (Random Access Memory). RAM may be written into or read from by the microprocessor, and is used to store data generated by one part of the program for use in another part of the program. Half of the RAM is reserved for storage of the data to be displayed on the CRT.

15-5. A Peripheral Interface Adapter (PIA) on the microprocessor bus provides input and output latches for thefront panel keyboard input (KYBD COL 0-3 and KYBD ROW 0-4), the IEEE option detector input (IEEE OPT DET), theAF BUS EN1 signal line, and the nonvolatile memory (NVM). Data that is to be held during power off is stored by the microprocessor in the NVM. Then when power is turned on the microprocessor reads the contents of the NVM to obtain its start up mode, the RF and tone memory presets, and the rest of the preset data. If the operator changes a preset, the microprocessor changes the data in the NVM so that the new preset will be remembered. The NVM has a 42 x 8 or fourty two eight bit words capability.

15-6. Character Generator. The Character Generator sequentially accesses that half of RAM where character information is stored and causes the respective characters to be displayed on the screen. Since both the character generator and the microprocessor share the same memory, the two must be synchronized so that they access that memory during alternate half cycles of the master clock. A 4 MHz oscillator is divided by four within the 6802 to give the 1 MHz (E) master timing signal. The E signal from the microprocessor is then used to synchronize the 2 MHz DOT CLOCK and input to the Character Clock Generator.

15-7. A raster scan technique is used to generate the character display. The CRT beam is scanned horizontally and vertically across the screen with the beam being modulated by a sequence of pulses. Each pulse is a dot on the screen whose position is determined by its time of occurrence from the horizontal and vertical sync pulses. During the horizontal sync the beam is reset to the left edge of the screen and during the vertical sync it is reset to the top of the screen. Each character field is eight dots wide and eight dots high. There are 32 character fields across the width of the CRT and 16 character field vertically. Since two horizontal character fields are used for horizontal sync blanking and one vertical field for vertical sync blanking the total display area is 30 by 15 characters or 450 characters.

15-8. Seven bit words representing one of 128 possible characters are stored in RAM for each character location on the CRT. The character generator sequentially accesses each RAM location in synchronization with the raster scan and creates a pulse modulation sequence in response to the character data that results in the character being displayed on the CRT. When the processor is not accessing RAM, the Address/Data Buffer from the processor is disabled and the Address Buffer from the character generator is enabled. The CHAR ADRS signal from the Character Clock Generator addresses the RAM location corresponding to the location being currently scanned on the CRT. The seven bits of data representing the character to be displayed are latched by the CHAR LATCH signal. A Character ROM decodes the seven bits plus a three bit ROW ADRS to determine the dot pattern for the current dot row scan position for the character to be displayed. The dot pattern is then parallel loaded into a Shift Register and clocked out serially to give the CHAR GEN Z-AXIS pulse modulation sequence. It should be noted that each character line on the CRT is scanned eight times, once for each dot row. Thus each character must be accessed eight times from RAM before the total character is displayed.

15-9. To maintain synchronization between the CHAR GEN Z-AXIS signal and the raster scan, the Clock Generator outputs horizontal and vertical character sync signals. These sync signals coordinated the sweep generators on the Scope/DVM Control module with the character generator. For the dual display mode, explained in paragraph 9-6, a LINE 1 output and a CHAR GEN RST input is provided to the clock generator.

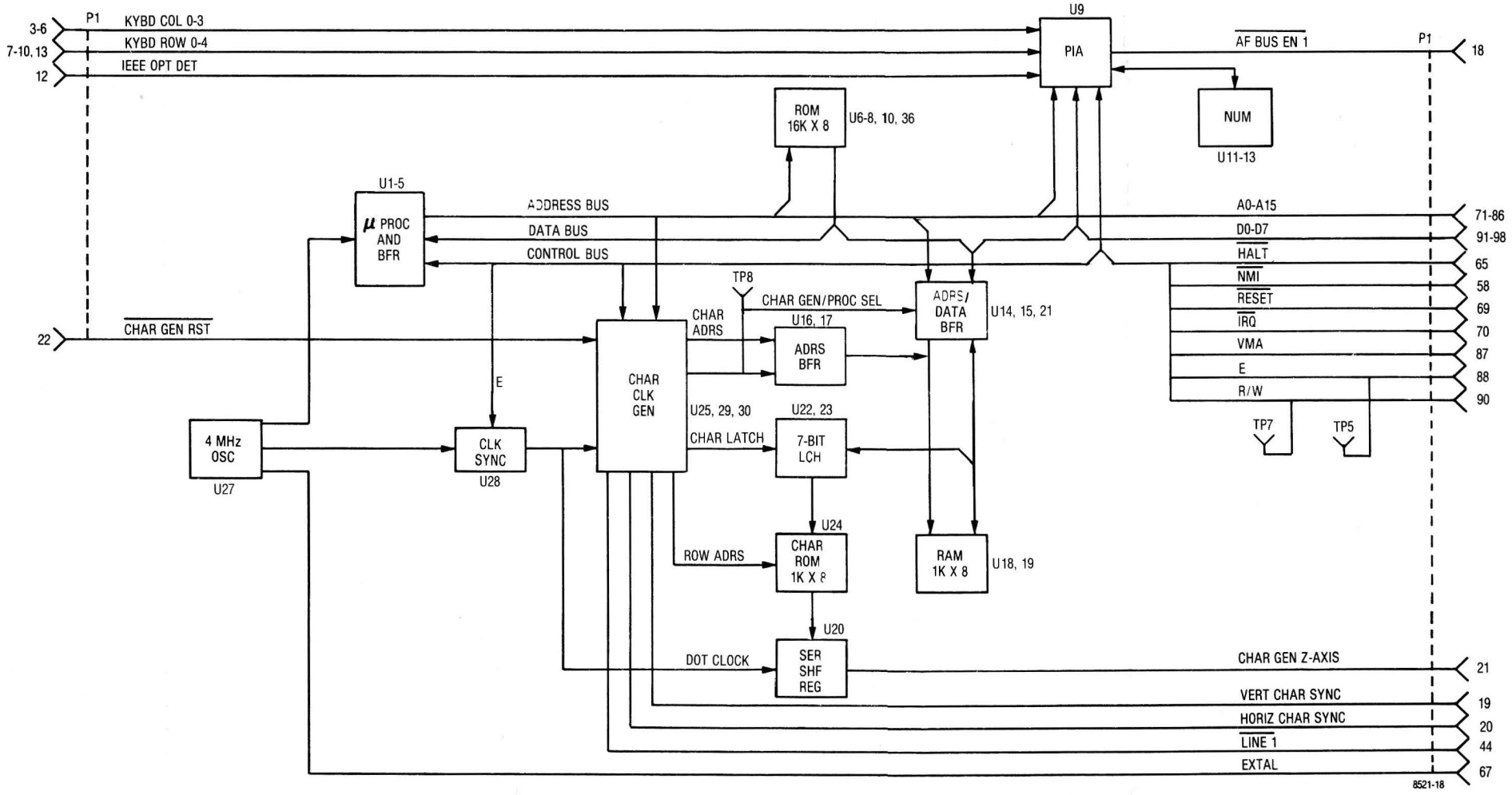

Figure 15-1. Microprocessor Module A9 Block Diagram

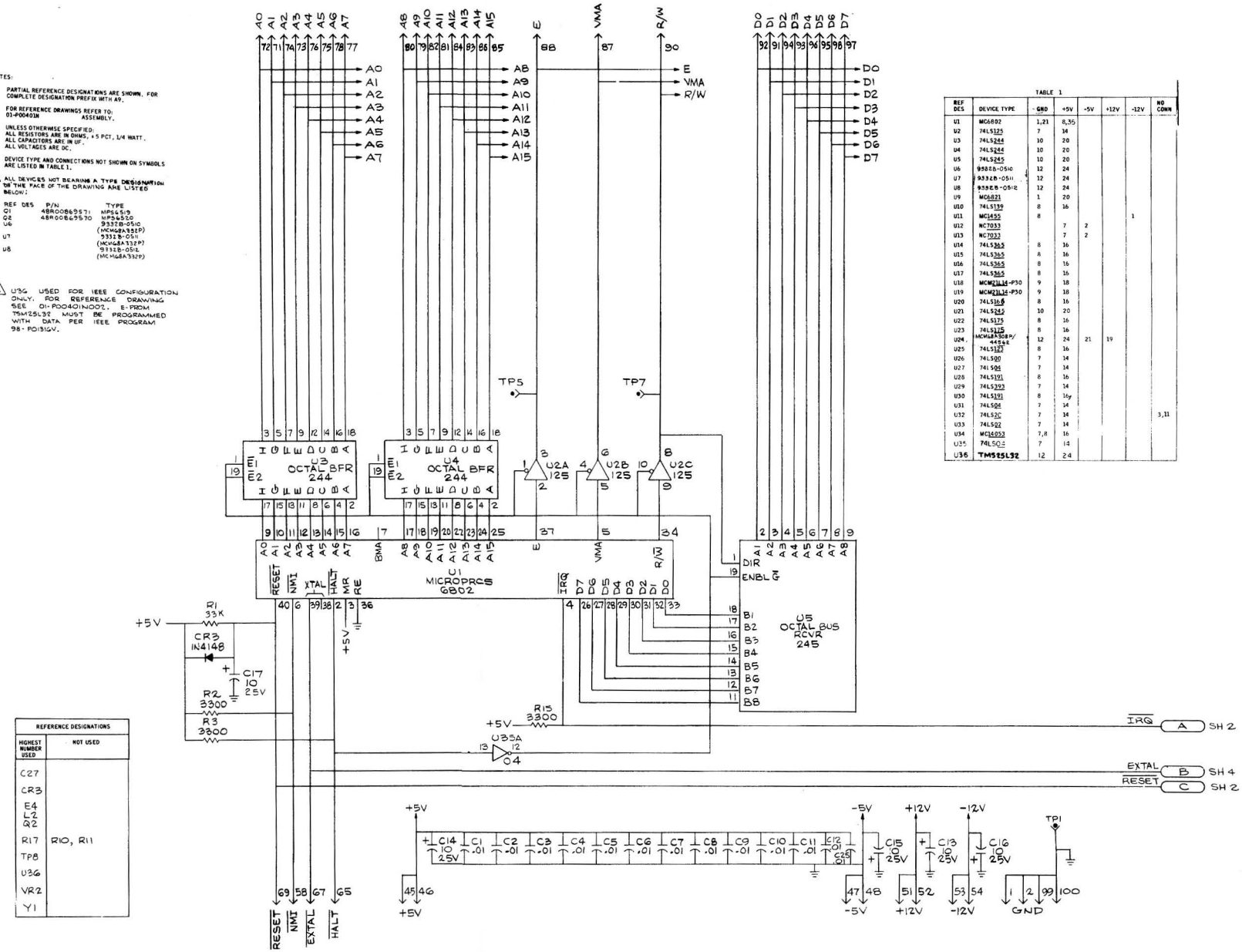

NOTES:

1. PARTIAL REFERENCE DESIGNATIONS ARE SHOWN. FOR COMPLETE DESIGNATION PREFIX WITH A9.
2. FOR REFERENCE DRAWINGS REFER TO: 01-P0040IW ASSEMBLY.
3. UNLESS OTHERWISE SPECIFIED: ALL RESISTORS ARE IN OHMS, ±5 PCT, 1/4 WATT. ALL CAPACITORS ARE IN UF. ALL VOLTAGES ARE DC.
4. DEVICE TYPE AND CONNECTIONS NOT SHOWN ON SYMBOLS ARE LISTED IN TABLE 1.

⚠ ALL DEVICES NOT BEARING A TYPE DESIGNATION ON THE FACE OF THE DRAWING ARE LISTED BELOW:

REF DES	P/N	TYPE
Q1	48R00869571	MPS6519
Q2	48R00869570	MPS6520
U6		9332B-0510 (MCM68A332P)
U7		9332B-0511 (MCM68A332P)
U8		9332B-0512 (MCM68A332P)

⚠ U36 USED FOR IEEE CONFIGURATION ONLY. FOR REFERENCE DRAWING SEE 01-P0040IN002. E-PROM TMS25L32 MUST BE PROGRAMMED WITH DATA PER IEEE PROGRAM 98-P0131GV.

TABLE 1

REF DES	DEVICE TYPE	GND	+5V	-5V	+12V	-12V	NO CONN
U1	MC6802	1,21	8,35				
U2	74LS125	7	14				
U3	74LS244	10	20				
U4	74LS244	10	20				
U5	74LS245	10	20				
U6	9332B-0510	12	24				
U7	9332B-0511	12	24				
U8	9332B-0512	12	24				
U9	MC6821	1	20				
U10	74LS139	8	16				
U11	MC1455	8				1	
U12	NC7033		7	2			
U13	NC7033		7	2			
U14	74LS365	8	16				
U15	74LS365	8	16				
U16	74LS365	8	16				
U17	74LS365	8	16				
U18	MCM2114-P30	9	18				
U19	MCM2114-P30	9	18				
U20	74LS166	8	16				
U21	74LS245	10	20				
U22	74LS175	8	16				
U23	74LS175	8	16				
U24	MCM68A308P/448AE	12	24	21	19		
U25	74LS123	8	16				
U26	74LS00	7	14				
U27	74LS04	7	14				
U28	74LS191	8	16				
U29	74LS393	7	14				
U30	74LS191	8	16				
U31	74LS04	7	14				
U32	74LS20	7	14				3,11
U33	74LS02	7	14				
U34	MC14053	7,8	16				
U35	74LS04	7	14				
U36	TMS25L32	12	24				

REFERENCE DESIGNATIONS

HIGHEST NUMBER USED	NOT USED
C27	
CR3	
E4	
L2	
Q2	
R17	R10, R11
TP8	
U36	
VR2	
Y1	

Figure 15-2. Microprocessor/Character Generator A9 Schematic Diagram (Sheet 1 of 4) (RTC-4014A)

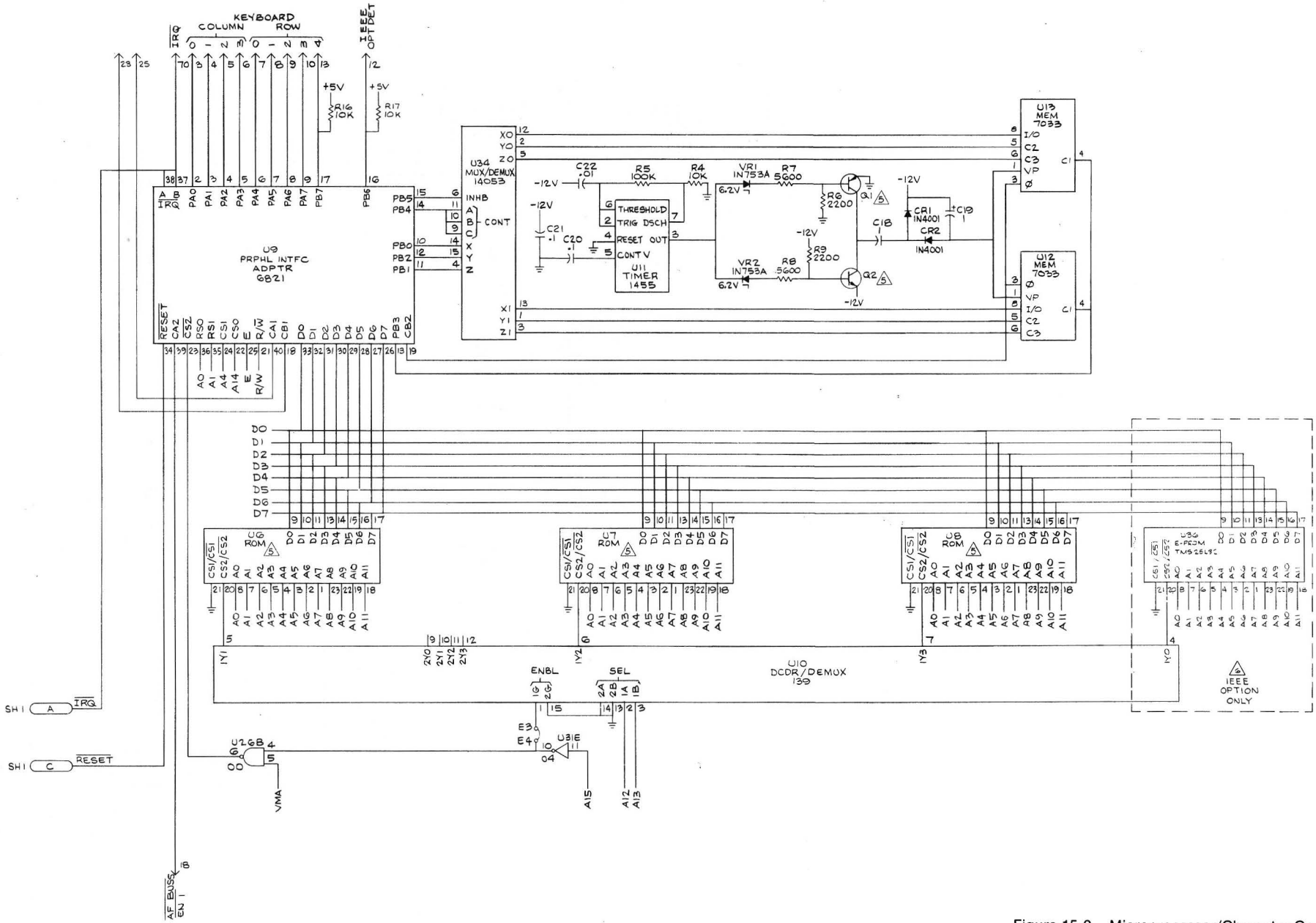

Figure 15-2. Microprocessor/Character Generator A9 Schematic Diagram (Sheet 2 of 4) (RTC-4014A)

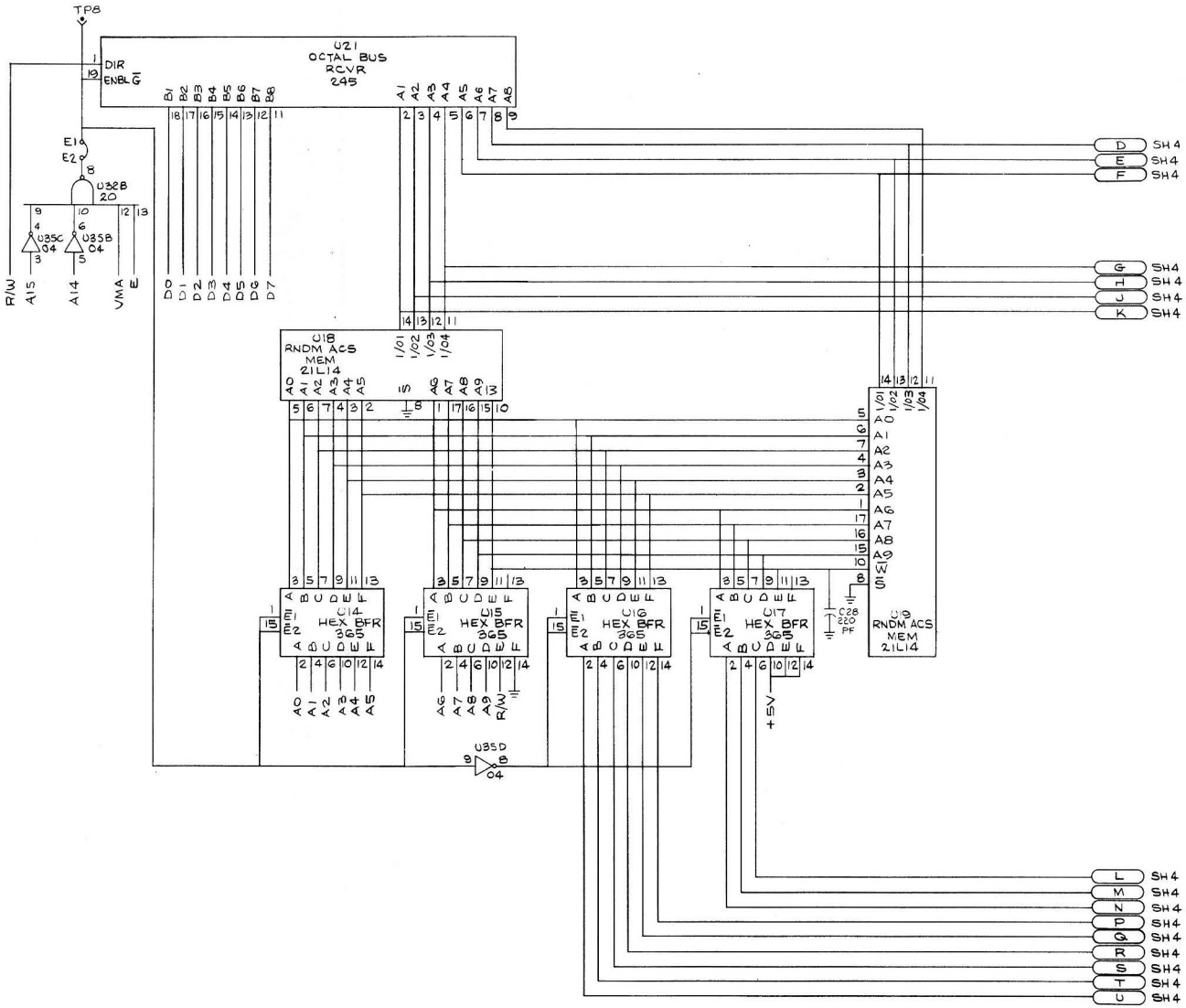

Figure 15-2. Microprocessor/Character Generator A9

Schematic Diagram (Sheet 3 of 4)
(RTC-4014A)

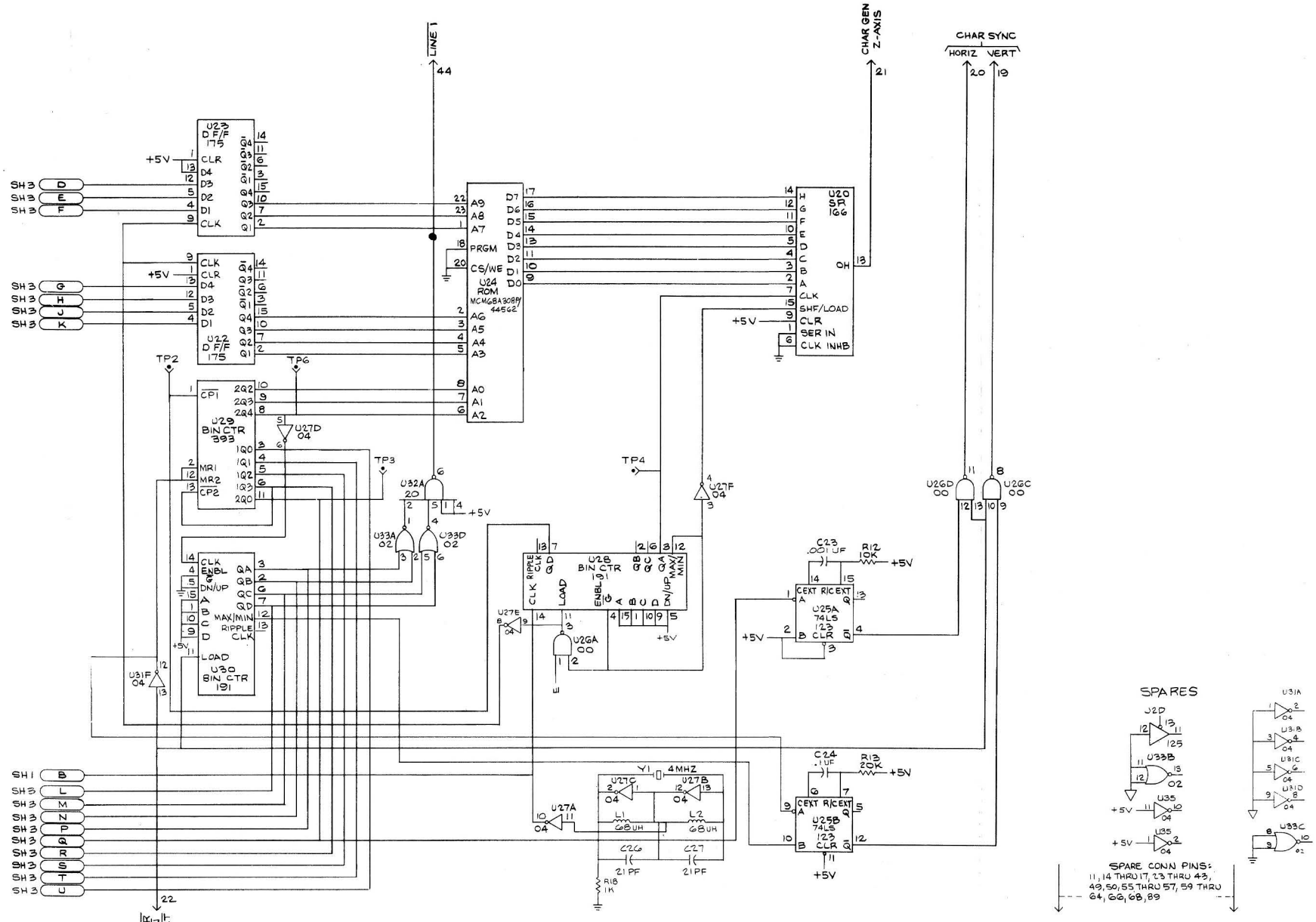

Figure 15-2. Microprocessor/Character Generator A9 Schematic Diagram (Sheet 4 of 4) (RTC-4014A)

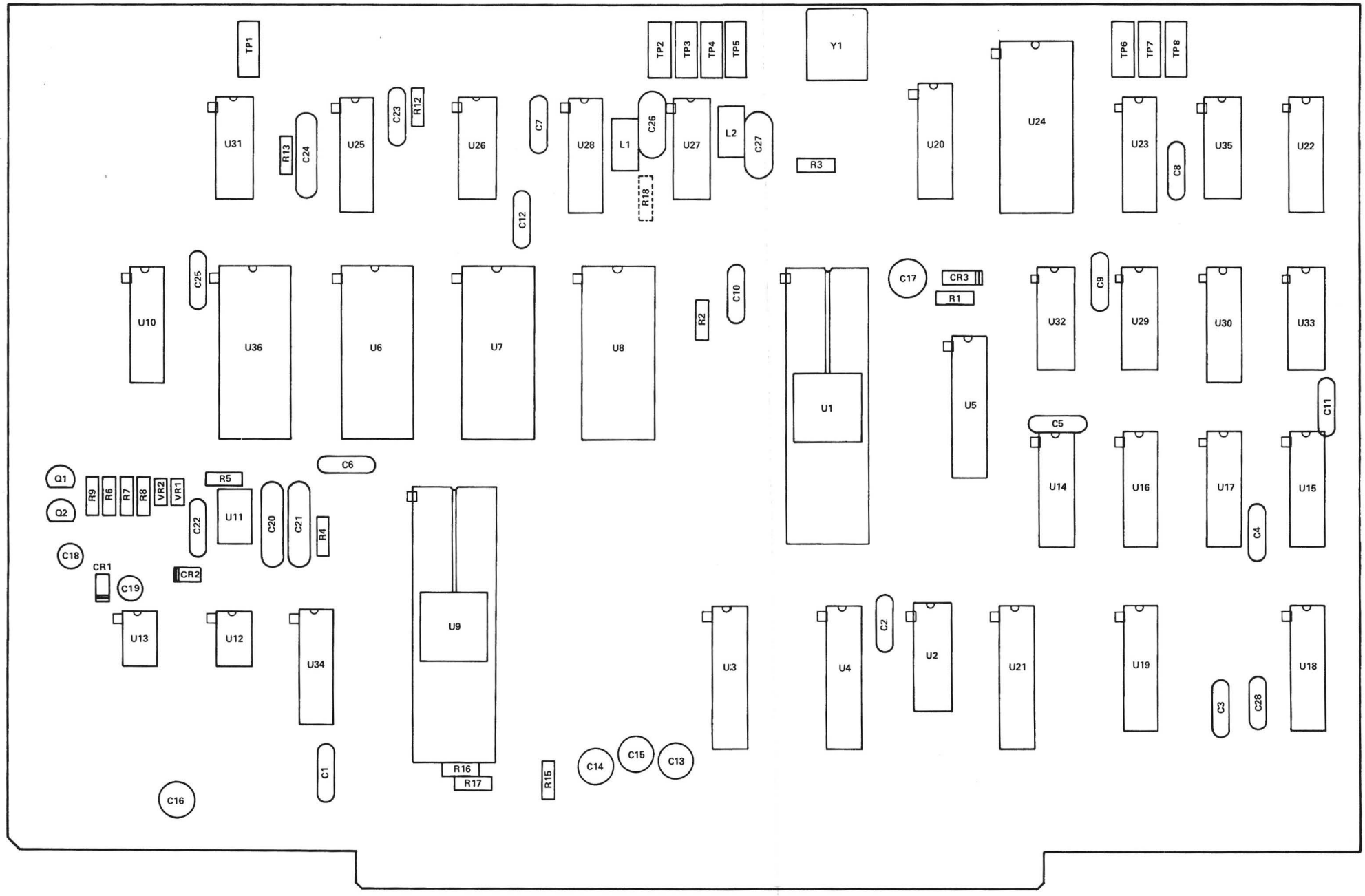

Figure 15-3. Processor Module Parts Locator

Microprocessor/Character Generator A9
RTC-4014A

Find No.	Qty. Req.	Part Number	Nomenclature	Part Value
001	1	84-P00443N001	PWB, MICRO PROC CHAR	
003	AR	SN63WRMAP3	SOLDER	
004	AR	11-14167A01	INK	BLACK
005	1	07-P00499N001	BRACKET,PWB MTG	
006	4	MS20470AD4-5	RIVET	1/8X.312
007	2	5C84500B03	EYELET	
008	2	42C84284B01	RETAINER	
009	2	MS35206-214	SCREW,PH	4-40X.312
010	3	C9524-01	SOCKET	24 PIN
011	4	3-582118-9	JACK,TIP	WHITE
012	4	3-582118-5	JACK,TIP	GREEN
C 001	1	21D82428B62	CAPACITOR	.01UF80-20-200
C 002	1	21D82428B62	CAPACITOR	.01UF80-20-200
C 003	1	21D82428B62	CAPACITOR	.01UF80-20-200
C 004	1	21D82428B62	CAPACITOR	.01UF80-20-200
C 005	1	21D82428B62	CAPACITOR	.01UF80-20-200
C 006	1	21D82428B62	CAPACITOR	.01UF80-20-200
C 007	1	21D82428B62	CAPACITOR	.01UF80-20-200
C 008	1	21D82428B62	CAPACITOR	.01UF80-20-200
C 009	1	21D82428B62	CAPACITOR	.01UF80-20-200
C 010	1	21D82428B62	CAPACITOR	.01UF80-20-200
C 011	1	21D82428B62	CAPACITOR	.01UF80-20-200
C 012	1	21D82428B62	CAPACITOR	.01UF80-20-200
C 013	1	23D84665F01	CAPACITOR	10UF-25V
C 014	1	23D84665F01	CAPACITOR	10UF-25V
C 015	1	23D84665F01	CAPACITOR	10UF-25V
C 016	1	23D84665F01	CAPACITOR	10UF-25V
C 017	1	23D84665F01	CAPACITOR	10UF-25V
C 018	1	23D83441B15	CAPACITOR	1.0UF-20-35
C 019	1	23D83441B15	CAPACITOR	1.0UF-20-35
C 020	1	21C82372C09	CAPACITOR	.1UF80-20-25
C 021	1	21C82372C09	CAPACITOR	.1UF80-20-25
C 022	1	21D82428B62	CAPACITOR	.01UF80-20-200
C 023	1	21D82187B14	CAPACITOR	1000PF-10-100
C 024	1	UK16-104	CAPACITOR	.1UF-20-16
C 025	1	21D82428B62	CAPACITOR	.01UF80-20-200
C 026	1	21D84494B40	CAPACITOR	21PF-5-500
C 027	1	21D84494B40	CAPACITOR	21PF-5-500
C 028	1	21D84494B12	CAPACITOR	220PF-5-500
CR001	1	48-86850C47	DIODE	
CR002	1	48-86850C47	DIODE	
CR003	1	48-84463K02	DIODE	
L 001	1	MS90538-08	COIL	68UH
L 002	1	MS90538-08	COIL	68UH
Q 001	1	48R00869571	TRANSISTOR	
Q 002	1	48R00869570	TRANSISTOR	
R 001	1	6S124A85	RESISTOR	33K-5-1/4
R 002	1	6S124A61	RESISTOR	3.3K-5-1/4
R 003	1	6S124A61	RESISTOR	3.3K-5-1/4
R 004	1	6S124A73	RESISTOR	10K-5-1/4
R 005	1	6S124A97	RESISTOR	100K-5-1/4
R 006	1	6S124A57	RESISTOR	2.2K-5-1/4
R 007	1	6S124A67	RESISTOR	5.6K-5-1/4
R 008	1	6S124A67	RESISTOR	5.6K-5-1/4
R 009	1	6S124A57	RESISTOR	2.2K-5-1/4
R 012	1	6S124A73	RESISTOR	10K-5-1/4
R 013	1	6S124A80	RESISTOR	20K-5-1/4
R 015	1	6S124A61	RESISTOR	3.3K-5-1/4
R 016	1	6S124A73	RESISTOR	10K-5-1/4
R 017	1	6S124A73	RESISTOR	10K-5-1/4
R 018	1	6S185A49	RESISTOR	1K-5-1/8
U 001	1	51-82807K41	INTEGRATED CIRCUIT	
U 002	1	51-84118K71	INTEGRATED CIRCCUIT	
U 003	1	51-84118K79	INTEGRATED CIRCUIT	
U 004	1	51-84118K79	INTEGRATED CIRCUIT	
U 005	1	51-80346A58S	INTEGRATED CIRCUIT	
U 006	1	51-80345A37	INTEGRATED CIRCUIT	
U 007	1	51-80345A38	INTEGRATED CIRCUIT	
U 008	1	51-80345A39	INTEGRATED CIRCUIT	
U 009	1	51-82807K03	INTEGRATED CIRCUIT	
U 010	1	51-84118K38	INTEGRATED CIRCUIT	
U 011	1	51-84621K24	INTEGRATED CIRCUIT	
U 012	1	51-80345A29	INTEGRATED CIRCUIT	
U 013	1	51-80345A29	INTEGRATED CIRCUIT	
U 014	1	51-80345A31	INTEGRATED CIRCUIT	
U 015	1	51-80345A31	INTEGRATED CIRCUIT	
U 016	1	51-80345A31	INTEGRATED CIRCUIT	
U 017	1	51-80345A31	INTEGRATED CIRCUIT	
U 018	1	51-80345A11	INTEGRATED CIRCUIT	
U 019	1	51-80345A11	INTEGRATED CIRCUIT	
U 020	1	51-84118K76	INTEGRATED CIRCUIT	
U 021	1	51-80346A58S	INTEGRATED CIRCUIT	
U 022	1	51-84118K25	INTEGRATED CIRCUIT	
U 023	1	51-84118K25	INTEGRATED CIRCUIT	
U 024	1	51-80345A12	INTEGRATED CIRCUIT	
U 025	1	51-84118K32	INTEGRATED CIRCUIT	
U 026	1	51-84118K06	INTEGRATED CIRCUIT	
U 027	1	51-80346A59S	INTEGRATED CIRCUIT	
U 028	1	51-84118K77	INTEGRATED CIRCUIT	
U 029	1	51-84118K63	INTEGRATED CIRCUIT	
U 030	1	51-84118K77	INTEGRATED CIRCUIT	
U 031	1	51-80346A59S	INTEGRATED CIRCUIT	
U 032	1	51-84118K17	INTEGRATED CIRCUIT	
U 033	1	51-84118K13	INTEGRATED CIRCUIT	
U 034	1	51-5467G01	INTEGRATED CIRCUIT	
U 035	1	51-80346A59S	INTEGRATED CIRCUIT	
36	1	1-80346A62	INTEGRATED CIRCUIT	
VR001	1	48-84302A09	DIODE,ZENER	6.2V-5-.4
VR002	1	48-84302A09	DIODE,ZENER	6.2V-5-.4
Y 001	1	48-80346A06	CRYSTAL	4.0MHZ

ASSEMBLY PARTS LIST

Microprocessor/Character Generator A9
RTC-4014A

SECTION 16

HIGH VOLTAGE POWER SUPPLY (A10)

16-1. General. Bias and drive voltages for the CRT are supplied by the High Voltage Supply. The supply converts a nominal 8 VDC input level to output voltages of +4 kV and -2 kV. Circuits for low voltage control of the intensity and focus grids is also provided. A block diagram of the High Voltage Power Supply is shown in figure 16-1 and its schematic in figure 16-2.

16-2. High Voltage Supply. A nominal 8 VDC level at the center tap on the high voltage transformer is switched through the primary winding by the chopper at a 20 kHz rate. Q4/Q6 BASE DRIVE signals from the Low Voltage Supply drive the Chopper circuitry. The secondary of the transformer is a 1 KV winding that is quadrupled to a nominal +4 kV and is doubled to a nominal -2 kV. A separate 6.3 V winding provide the CRT heater drive.

16-3. The -2 kV is regulated by comparing a sample of that voltage to the 7.9V REF signal. The resultant error signal (HV CONTROL) controls the level of the DC input to the high voltage transformer.

16-4. A Bias Divider circuit on the primary center tap provides the operating potential for the Q4/Q6 drive winding in the low voltage power supply.

16-5. Intensity and Focus Control. An 87V zener diode and resistive divider provide the intensity and focus voltages. The modulator circuits provide variable output voltages within their bias ranges under the control of the low voltage INTENSITY/FOCUS TV inputs.

16-6. DC control loops are utilized to stabilize the gird and focus voltages. For the intensity circuit the INTENSITY SAMPLE and HV REF signals are compared, on the Scope Amplifier Module, with the control input. The result of the comparison is the INTENSITY TV drive signal to the modulator. The focus voltage is controled in the same way, except the HV REF signal is not used in the comparison.

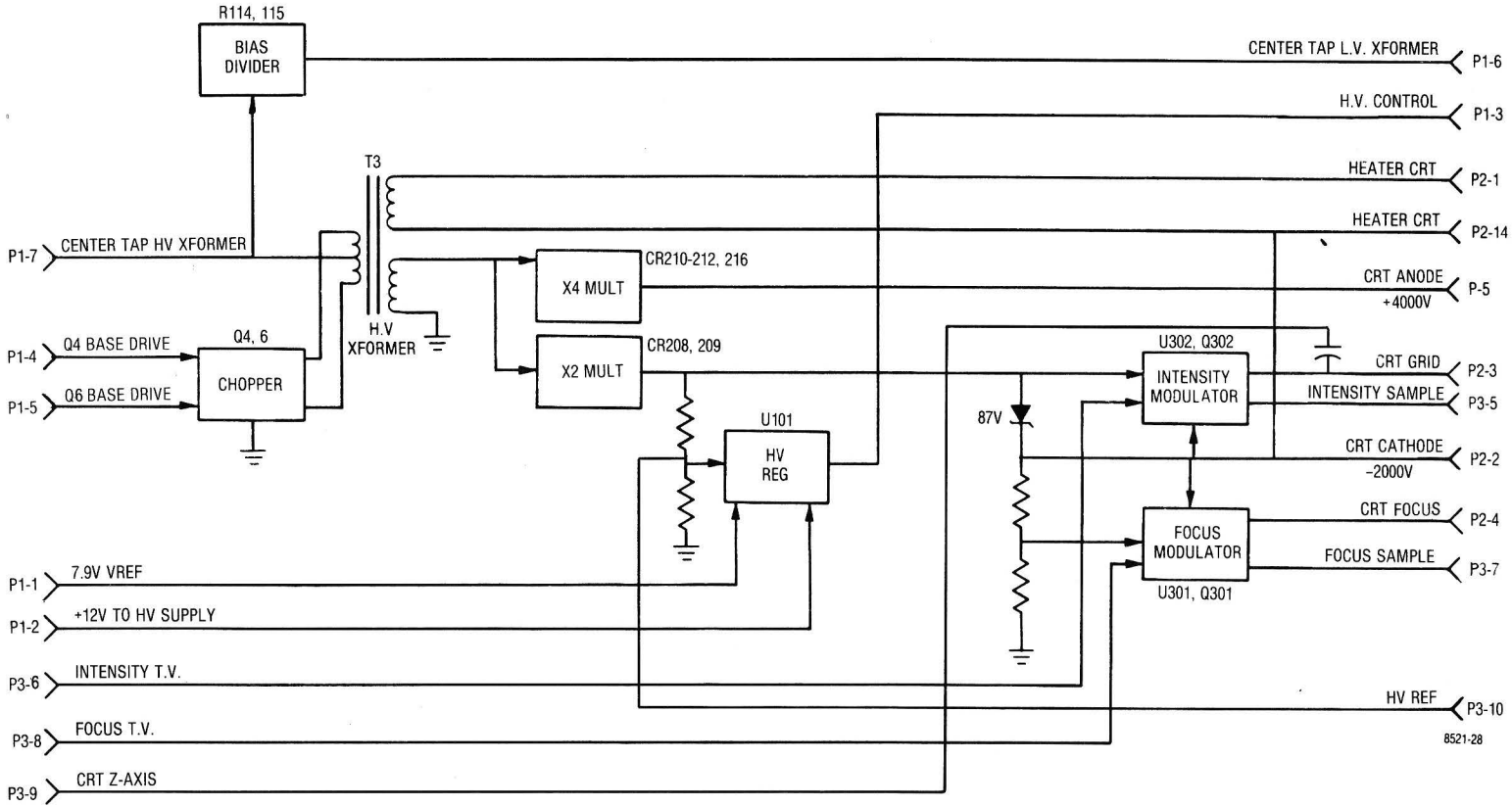

Figure 16-1. High Voltage Power Supply A10 Block Diagram

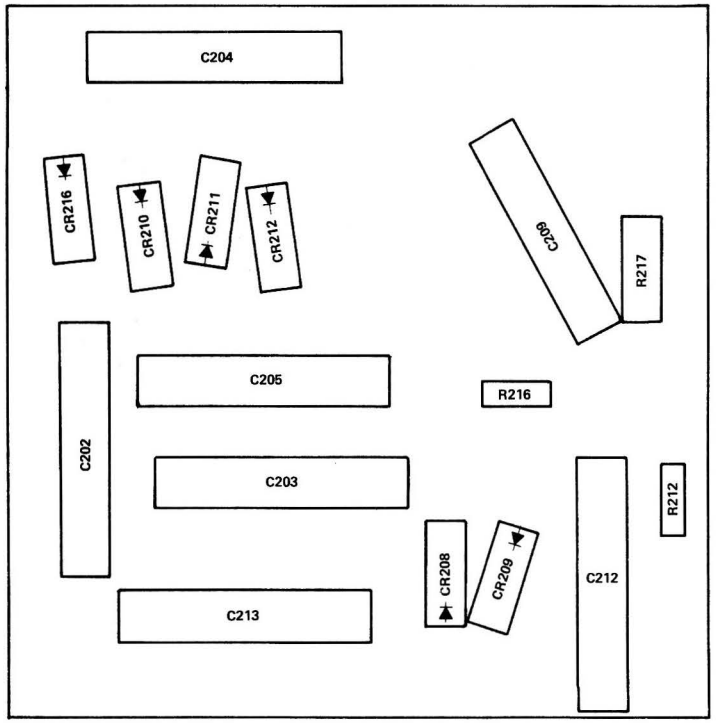

High Voltage Power & Regulator A10A1

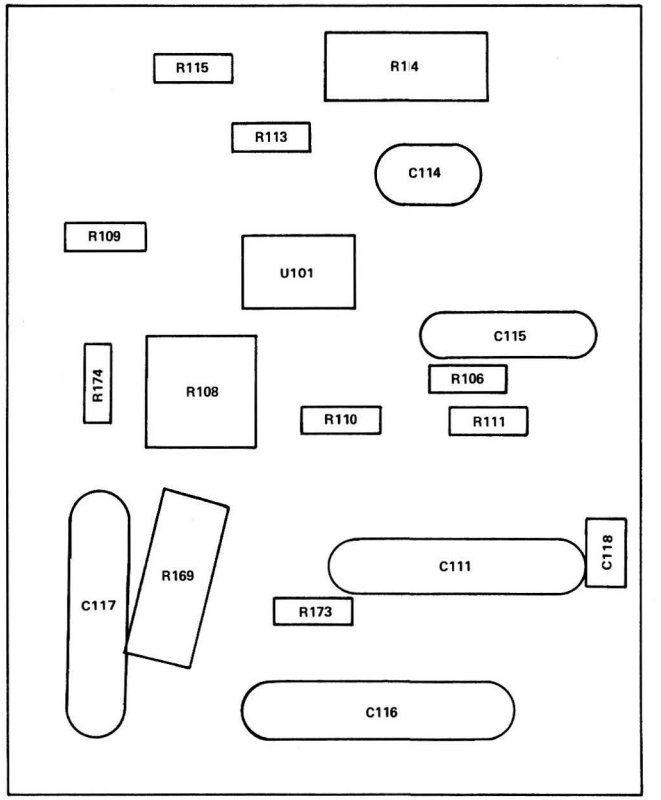

High Voltage Regulator A10A2

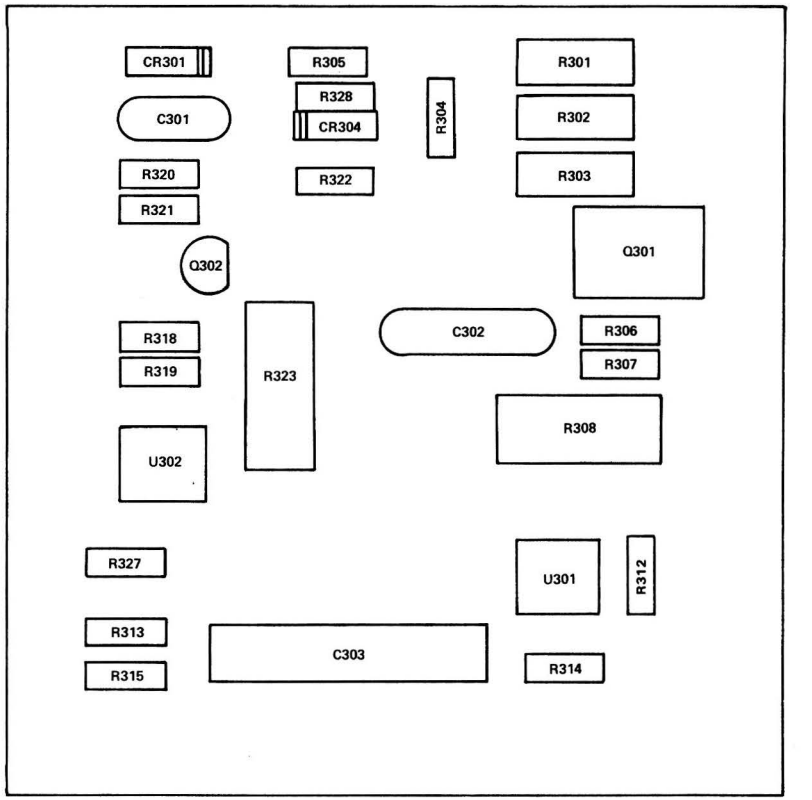

SCOPE-ZAxis/Focus/Int Control A10A3

High Voltage Power Supply A10
Parts Location

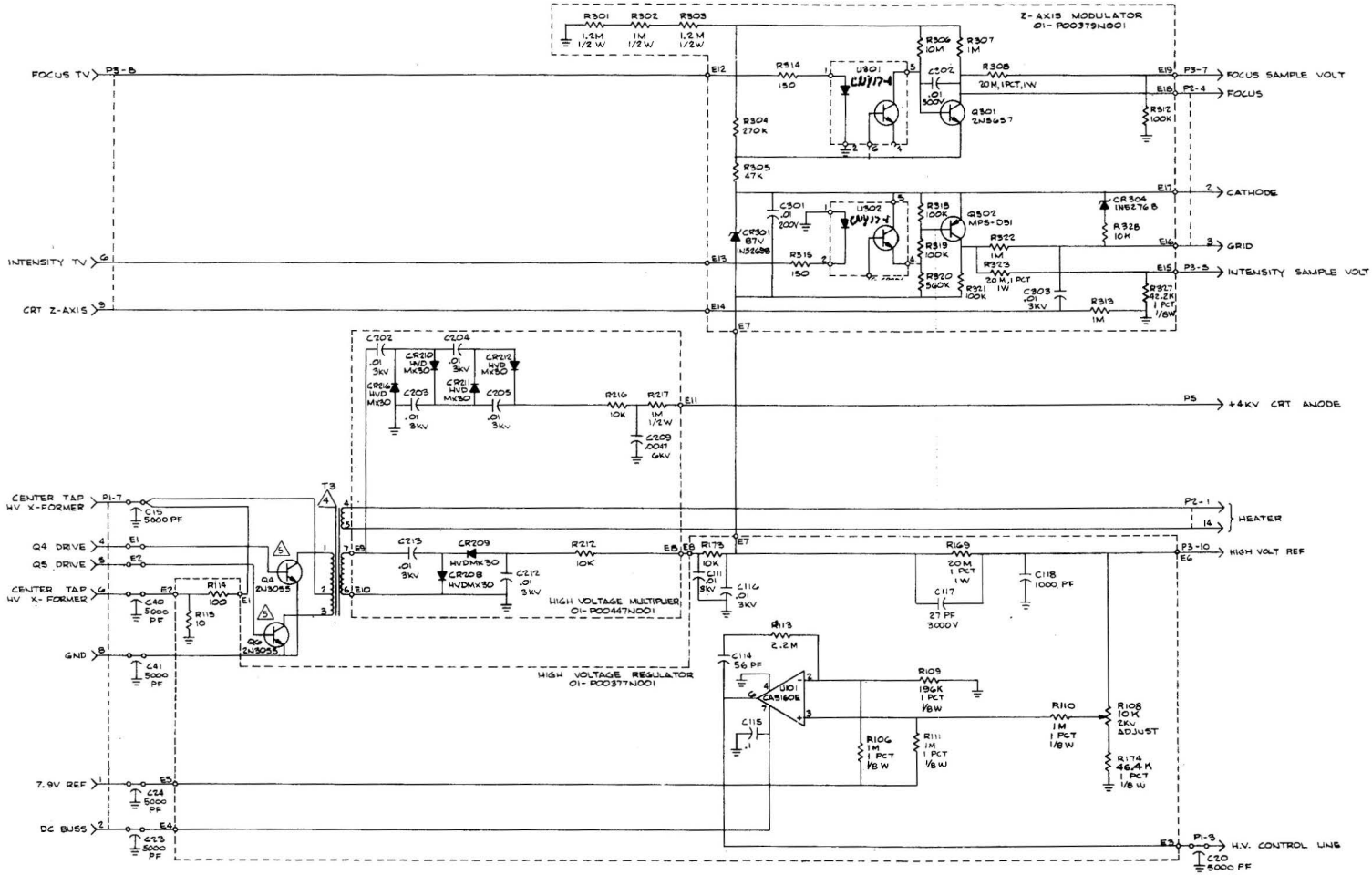

NOTES:

1. PARTIAL REFERENCE DESIGNATIONS ARE SHOWN. FOR COMPLETE DESIGNATION PREFIX WITH 1A10.
2. FOR REFERENCE DRAWINGS REFER TO: 01-P00417N
3. UNLESS OTHERWISE SPECIFIED: ALL RESISTORS ARE IN OHMS ± 5 PCT, 1/4 WATT. ALL CAPACITORS ARE IN UF. ALL VOLTAGES ARE IN DC.
4. MOTOROLA P/N 24-P00325N001
5. MOTOROLA P/N 48R869627

Figure 16-2. High Voltage Power Supply A10 Schematic Diagram (RTP-1001A)

High Voltage Power Supply A10
RTP-1001A

Find No.	Qty. Req.	Part No.	Nomenclature	Part Value
001	1	RTP-4003A	HIGH VOLTAGE REGULATO	
002	1	RTP-4002A	HV SUPPLY-PWB ASSEMBL	
003	1	RTP-4004A	SCOPE Z AXIS/FOCUS/IN	
004	1	27-80335A27	CHASSIS HV SUPPLY	
005	1	15-80335A29	COVER, HV SUPPLY	
006	AR	SN63WRMAP3	SOLDER	
007	AR	11-14167A01	INK	BLACK
008	2	29-15106A51	TERMINAL	
009	4	MS35206-216	SCREW,PH	4-40X.438
010	2	MS35338-40	WASHER,LOCK	NO.4
011	8	MS27183-3	WASHER,FLAT	NO.4
012	5	MS35649-242	NUT,HEX	4-40
013	3	MS35489-1	GROMMET	
015	5	43-15054A14	SPACER	4-40X.375
016	4	4503-440-A-9	SPACER,HEX-M/F	
017	15	MS35206-213	SCREW,PH	4-40X.250
018	AR		WIRE	22 WHT
020	3	F1-10-106-12	INSERT SHEET EDGE	6-32
021	1	42-14060A01	CLAMP ASSEMBLY, CONNE	MALE-SCREWLOCK
022	1	MS35489-6	GROMMET	
023	1	MS35206-236	SCREW	6-32X1.500
024	3	MS35206-230	SCREW	6-32X.500
025	4	MS35338-41	WASHER,LOCK	NO.6
026	4	MS27183-5	WASHER,FLAT	NO.6
027	1	MS35649-262	NUT,HEX	6-32
028	2	14-15141A01	INSULATOR,PLATE	
029	4	SW-4	WASHER,SHOULDER	
031	2	NAS1746-3	FERRULE,SOLDER	
032	4	MS77068-1	TERMINAL,LUG	4
033	AR		CABLE,TWISTED PAIR	24
034	AR		WIRE	24 WHT
035	AR	F01A070	WIRE,HIGH VOLTAGE	
036	AR		INSULATION TAPE,MYLAR	1IN YELLOW
037	AR	M23053/5-103-C	INSULATION SLEEVING	CL1 .093 ID
038	AR	M23053/5-103-9	INSULATION SLEEVING	.093 WHT
039	AR		TAPE	NATURAL
040	AR	G-642	COMPOUND,THERMAL	
041	AR	M23053/5-104-9	INSULATING SLEEVING	.125 WHT
042	2	8104-A-0440-10A	SPACER	4-40X.375
043	1	MS51848-45	WASHER	NO.4
044	22	MS35333-36	WASHER	NO.4
045	20	MS3367-4-9	STRAP	NATURAL
046	2	29-14155A02	TERMINAL	.256
C 015	1	2499-003X5W502AA	CAPACITOR	5000PF-GMV-500
C 020	1	2499-003X5W502AA	CAPACITOR	5000PF-GMV-500
C 023	1	2499-003X5W502AA	CAPACITOR	5000PF-GMV-500
C 024	1	2499-003X5W502AA	CAPACITOR	5000PF-GMV-500
C 040	1	2499-003X5W502AA	CAPACITOR	5000PF-GMV-500
C 041	1	2499-003X5W502AA	CAPACITOR	5000PF-GMV-500
P 001	1	DE-9P	CONNECTOR	
P 002	1	9709-7	CONNECTOR,CRT	
P 003	1	1-640440-0	CONNECTOR,10 PIN	
P 004	1	640440-5	CONNECTOR,5 PIN	
P 005	1	30-P06844R001	LEAD ASSY,HV	
Q 004	1	48R869627	TRANSISTOR	
Q 006	1	48R869627	TRANSISTOR	
T 003	1	24-P00325N001	TRANSFORMER,HV	

High Voltage Regulator Card A10A1
RTP-4003A

Find No.	Qty. Req.	Part No.	Nomenclature	Part Value
001	1	84-P00378N001	PWB, HIGH VOLTAGE REG	
002	AR	SN63WRMAP3	SOLDER	
003	AR	11-14167A01	INK	BLACK
004	AR		WIRE,BUS	24
005	AR	F01A070	WIRE,HIGH VOLTAGE	
C 111	1	21D83596E19	CAPACITOR	.01UF80-20-3KV
C 114	1	CM04ED560J03	CAPACITOR	56PF-5-500
C 115	1	21C82372C09	CAPACITOR	.1UF80-20-25
C 116	1	21D83596E19	CAPACITOR	.01UF80-20-3KV
C 117	1	30GA-027	CAPACITOR	27PF-10-3KV
C 118	1	21D82187B14	CAPACITOR	1000PF-10-100
R 106	1	06-10621E85	RESISTOR0-100	1M-1-1/8
R 108	1	18D83452F32	RESISTOR,VARIABLE	10K
R 109	1	06-10621E17	RESISTOR	196K-1-1/8
R 110	1	06-10621E85	RESISTOR/8	1M-1-1/8
R 111	1	06-10621E85	RESISTOR	1M-1-1/8
R 113	1	6S124B30	RESISTOR	2.2M-5-1/4
R 114	1	6S126A25	RESISTOR	100-5-1
R 115	1	6S124A01	RESISTOR	10-5-1/4
R 169	1	CGH-1	RESISTOR	20M-1-1
R 173	1	6S124A73	RESISTOR	10K-5-1/4
R 174	1	06-10621D56	RESISTOR4	46.4K-1-1/8
U 101	1	51-80345A02	INTEGRATED CIRCUIT	

High Voltage Supply PWB A10A2
RTP-4002A

Find No.	Qty. Req.	Part No.	Nomenclature	Part Value
001	1	84-P00448N001	PWB, HIGH VOLTAGE SUP	
002	AR	SN63WRMAP3	SOLDER	
003	AR	11-14167A01	INK	BLACK
004	AR	F01A070	WIRE,HIGH VOLTAGE	
005	AR		COMPOUND	
006	AR	GE4004	PRIMER	
C 202	1	21D83596E19	CAPACITOR	.01UF80-20-3KV
C 203	1	21D83596E19	CAPACITOR	.01UF80-20-3KV
C 204	1	21D83596E19	CAPACITOR	.01UF80-20-3KV
C 205	1	21D83596E19	CAPACITOR	.01UF80-20-3KV
C 209	1	60GA-D47	CAPACITOR	.0047-6000
C 212	1	21D83596E19	CAPACITOR	.01UF80-20-3KV
C 213	1	21D83596E19	CAPACITOR	.01UF80-20-3KV
CR208	1	48-80345A63	DIODE,HIGH VOLTAGE	
CR209	1	48-80345A63	DIODE,HIGH VOLTAGE	
CR210	1	48-80345A63	DIODE,HIGH VOLTAGE	
CR211	1	48-80345A63	DIODE,HIGH VOLTAGE	
CR212	1	48-80345A63	DIODE,HIGH VOLTAGE	
CR216	1	48-80345A63	DIODE,HIGH VOLTAGE	
R 212	1	6S124A73	RESISTOR	10K-5-1/4
R 216	1	6S124A73	RESISTOR	10K-5-1/4
R 217	1	6S125B22	RESISTOR	1M-5-1/2

Scope Z Axis/Focus/Int Control PWB A10A3
RTP-4004A

Find No.	Qty. Req.	Part No.	Nomenclature	Part V
001	1	84-P00380N001	PWB, SCOPE Z AXIS	
002	AR	SN63WRMAP3	SOLDER	
003	AR	11-14167A01	INK	BLACK
004	AR		WIRE,TEFLON	26 SOLID
005	AR	RTV3145	ADHESIVE	
006	AR		INSULATION SLEEVING	22 WHT
C 301	1	21D82428B62	CAPACITOR	.01UF80-2
C 302	1	21D82428B24	CAPACITOR	.01UF80-20-50
C 303	1	21D83596E19	CAPACITOR	.01UF80-2
CR301	1	48-80345	DIODE,ZENER-3KV	87V-5-.5
CR304	1	48-80345A87	DIODE,ZENER	150V-5-.5
Q 301	1	48-80341A45	TRANSISTOR	
Q 302	1	48-80341A46	TRANSISTOR	
R 301	1	6S125B24	RESISTOR	1.2M-5-1/2
R 302	1	6S125B22	RESISTOR	1M-5-1/2
R 303	1	6S125B24	RESISTOR	1.2M-5-1/
R 304	1	6S124B18	RESISTOR	680K-5-1/
R 305	1	6S124A89	RESISTOR	47K-5-1/4
R 306	1	6S124B22	RESISTOR	1M-5-1/4
R 307	1	6S124B22	RESISTOR	1M-5-1/4
R 308	1	CGH-1	RESISTOR	20M-1-1
R 312	1	6S124A97	RESISTOR	100K-5-1/4
R 313	1	6S124B22	RESISTOR	1M-5-1/4
R 314	1	6S124A29	RESISTOR	150-5-1/4
R 315	1	6S124A29	RESISTOR	150-5-1/4
R 318	1	6S124A97	RESISTOR	100K-5-1/4
R 319	1	6S124A97	RESISTOR	100K-5-1/4
R 320	1	6S124B16	RESISTOR	560K-5-1/
R 321	1	6S124A97	RESISTOR	100K-5-1/
R 322	1	6S124B22	RESISTOR	1M-5-1/4
R 323	1	CGH-1	RESISTOR	20M-1-1
R 327	1	06-10621D52	RESISTOR	42.2K-1-1/
R 328	1	6S124A73	RESISTOR	10K-5-1/4
U 301	1	CNY17-4	OPTP ISOLATOR	
U 302	1	CNY17-1	OPTO ISOLATOR	

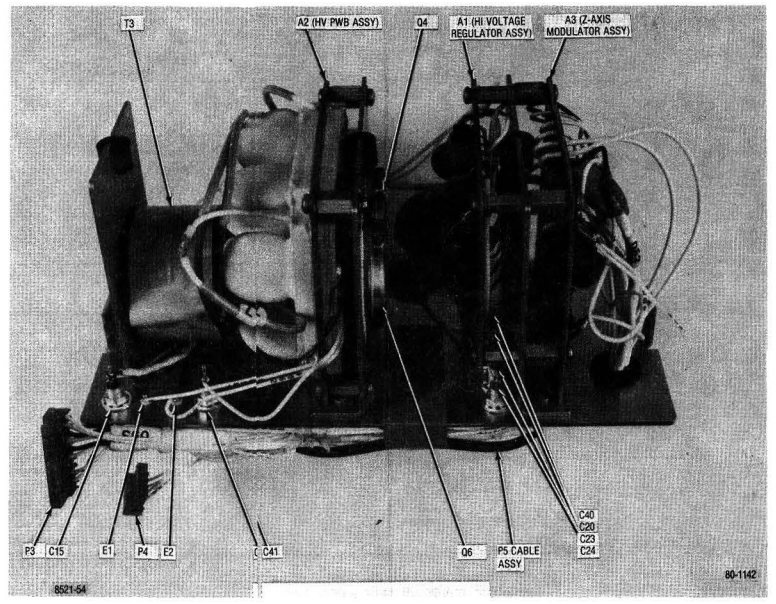

Figure 15-3. High Voltage Power Supply Parts Locator

Figure 16-4. High Voltage Power Supply

SECTION 17

RF INPUT MODULE (AH)

17-1. General. The RF Input Module is subdivided into three isolate circuits; input protection and power meter, wideband amplifier and frequency converter and duplex generator. A block diagram of the RF Input Module is shown in figure 17-1 with its schematic shown in figure 17-2.

17-2. Input Protection and Power Meter. RF power to and from the system pass through this section to a common input/output RF connector (RF In/Out) attached to the module. In the generate or monitor operating modes the input protection relay is switched so that a low-loss 50-ohm path exists through the module. When the power monitor mode is selected, the WATT MTR EN line switches the relay so that the input is connected to a 50 ohm power termination. A detector across a portion of the load provides a DC level proportional to the input RF level. This level isamplified and made availabletothe system processorforthedetermination of input power. A thermal sensor monitors the load temperature and signals the processor when safe operating limits are exceeded. The processor in turn warns the operator that the RF input to the unit must be removed to prevent permanent damage.

17-3. If power in excess of 200 mW is applied to the system while operating in the 50 ohm load, protecting the system. A signal line (INPUT PROTECT ACT) to the processor results in an audiable and visual warning to the operator that the unit is in a protected mode. The warning ceases and normal operation resumes if the RF input is removed or if the power monitor mode is selected.

17-4. Wideband Amplifier and Frequency Converter. The wideband amplifier provides a leveled RF output from-3dBm to+13dBm in the generate mode and a +7dBm LO drive in the monitor modes over the 10 KHz to I GHz frequency range. Primary components of the leveling loop are; the input VCA (Voltage Controlled Attenuator), the output level detector, and the level comparator. A level control voltage, proportional to the desired output level, is compared to the actual output level as determined by the level detector. The result of the comparison steers the VCA maintaining the detected output level equal to the requested output level. In the generate mode the control voltage is obtained from the front panel RF level control (AM Mod + DC REF). For generate AM, the modulation signal is summed with the DC control level, causing the RF output level to follow the modulation signal. Also, in the generate mode the signal from the output level detector(CARRIER + MOD LVL) is made available for the determination of RF output power and percent of AM. A fixed reference voltage is switched to the level control input in the monitor modes giving a leveled +7dBm local oscillator drive.

17-5. The VCA on the wideband amplifier board covers the frequency range from 1 MHz to 1 GHz. For frequencies below 1 MHz, the VCA select circuit clamps the VCA in the minimum attenuation position and enables a low frequency VCA in the RF Synthesizer. Coincident with the enabling of the low frequency VCA, the time constant of the output RF level detector is increased assuring proper operation down to 10 kHz.

17-6. The wideband amplifier output is relay switched between the local oscillator port of the input mixer for the monitor and generate DSBSC modes, and the RF attenuator for the generate mode. An RF sample from the mixer local oscillator output terminal, at a nominal level of -20dBm, is provided to the duplex generator.

17-7. The frequency converter section consists of the input mixer, the first IF amplifier, and IF filters. In the monitor mode the desired signal is converted to 10.7 MHz by the input mixer. A two-pole input filter, IF amplifier, and a four-pole output filter select the 10.7 MHz component at the mixer output. The 10.7 MHz IF **output of** the converter is applied to the receiver module.

17-8. For DSBSC generation the modulation audio is applied to the IF port of the input mixer through an isolation network. With the output of the wideband amplifier switched to the local oscillator port, a DSBSC signal is present at the RF port. Switching the Step Attenuator to the RF output port makes the DSBSC signal available at the RF output.

17-9. Duplex Generator. The Duplex Generator output is a frequency component that is offset from the system monitor frequency by 0 to 10 MHz or by 45 MHz. The offset is obtained by mixing the -20dBm local oscillator signal from the wideband amp, which is already offset by 10.7 MHz, with a signal frequency from 10.7 MHz to 0.7 MHz or 34.3 MHz.

17-10. For the 34.3 MHz mixing signal, a single VCO is used. Tuning of the VCO is with the OFFSET FINE TUNE line from the front panel. Frequency modulation of the VCO is implemented by suming the OFFSET MOD signal with the tuning voltage.

17-11. For the 0.7 MHz to 10.7 MHz mixing signal a VCO with a frequency range from 35 MHz to 45 MHz is mixed with the 34.3 MHz VCO. The 35-45 MHz VCO is tuned by the OFFSET COARSE TUNE line from the front panel.

17-12. A sample of the offset frequency is made availableto the frequency counter on the OFFSET FREQ line. The processor uses the frequency information to calculate and display the actual duplex frequency.

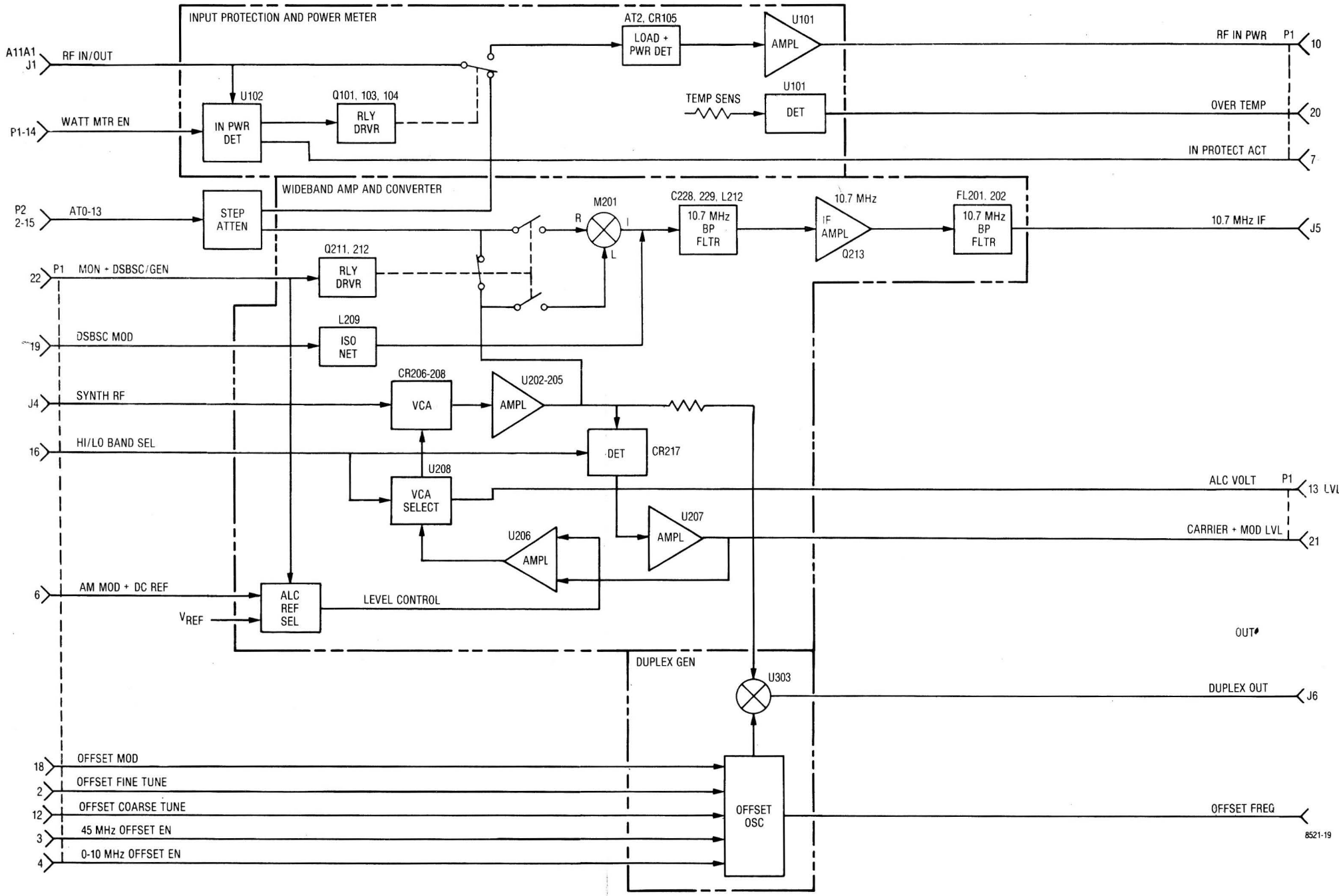

Figure 17-1. RF Input Module A11 Block Diagram

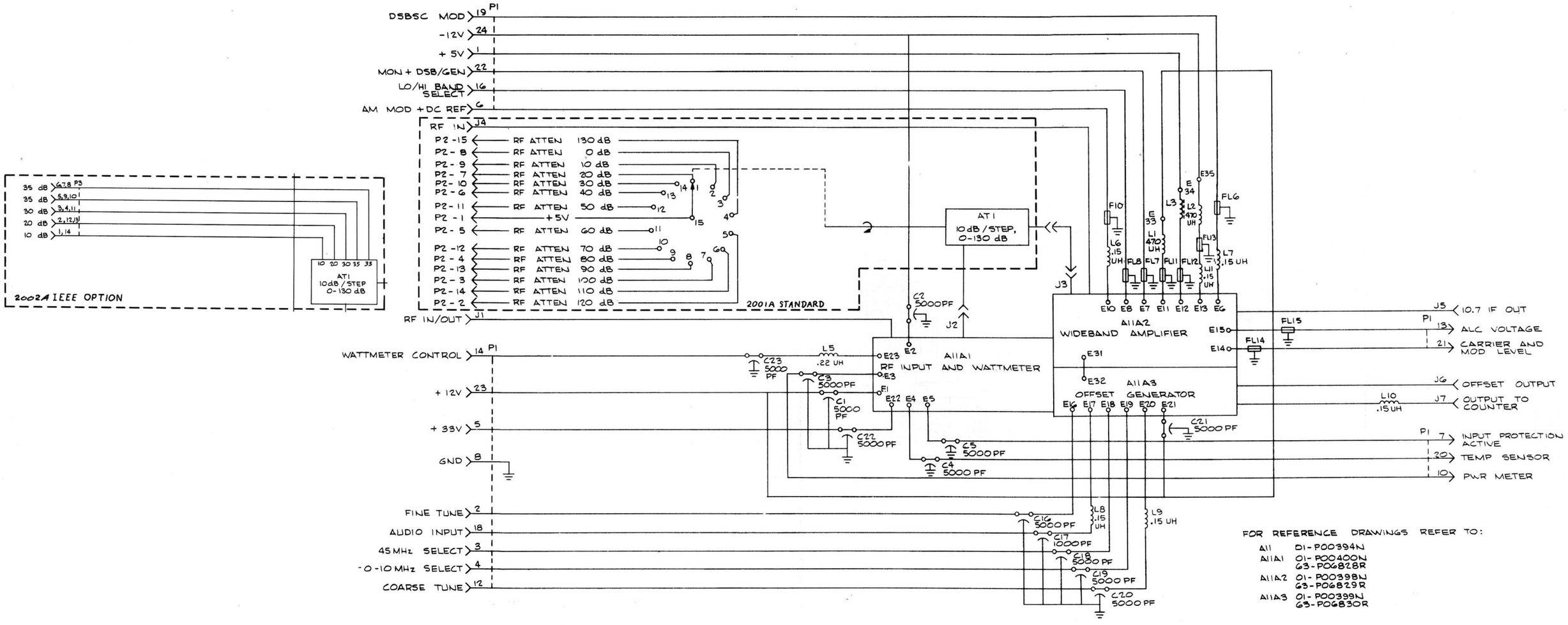

FOR REFERENCE DRAWINGS REFER TO:

A11	01-P00394N
A11A1	01-P00400N 63-P06828R
A11A2	01-P00398N 63-P06829R
A11A3	01-P00399N 63-P06830R

Figure 17-2. RF Input Module A11 Schematic Diagram (RTC-1003A)

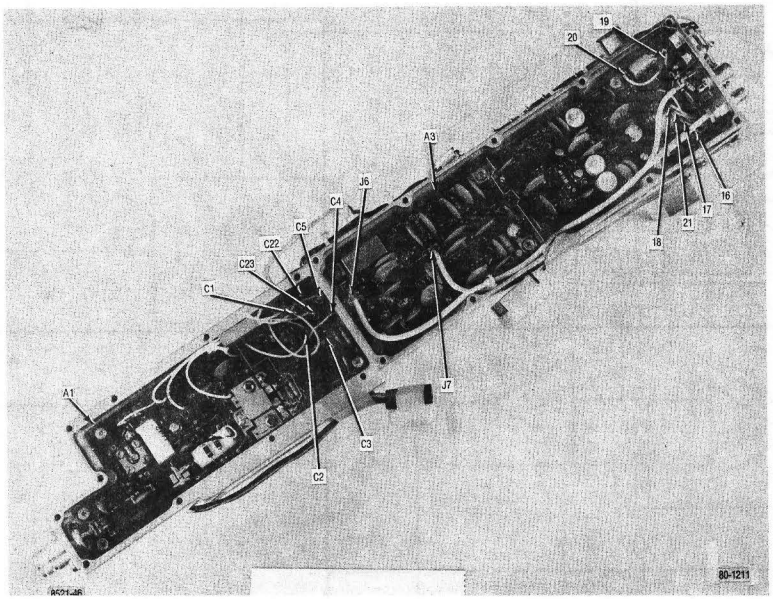

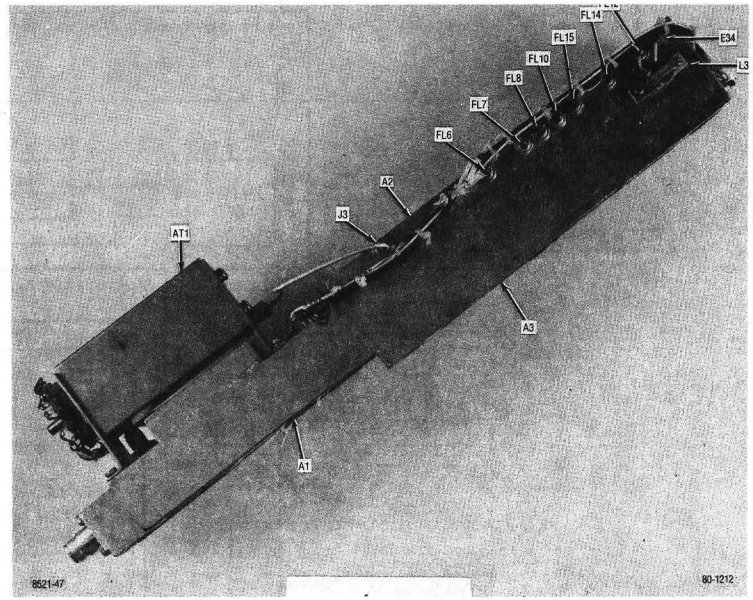

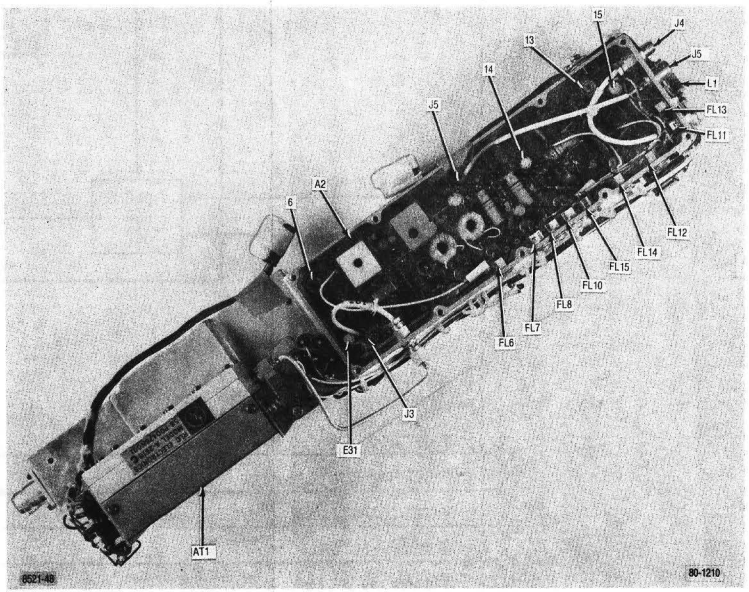

Figure 17-3. RF Input Module Parts Locator

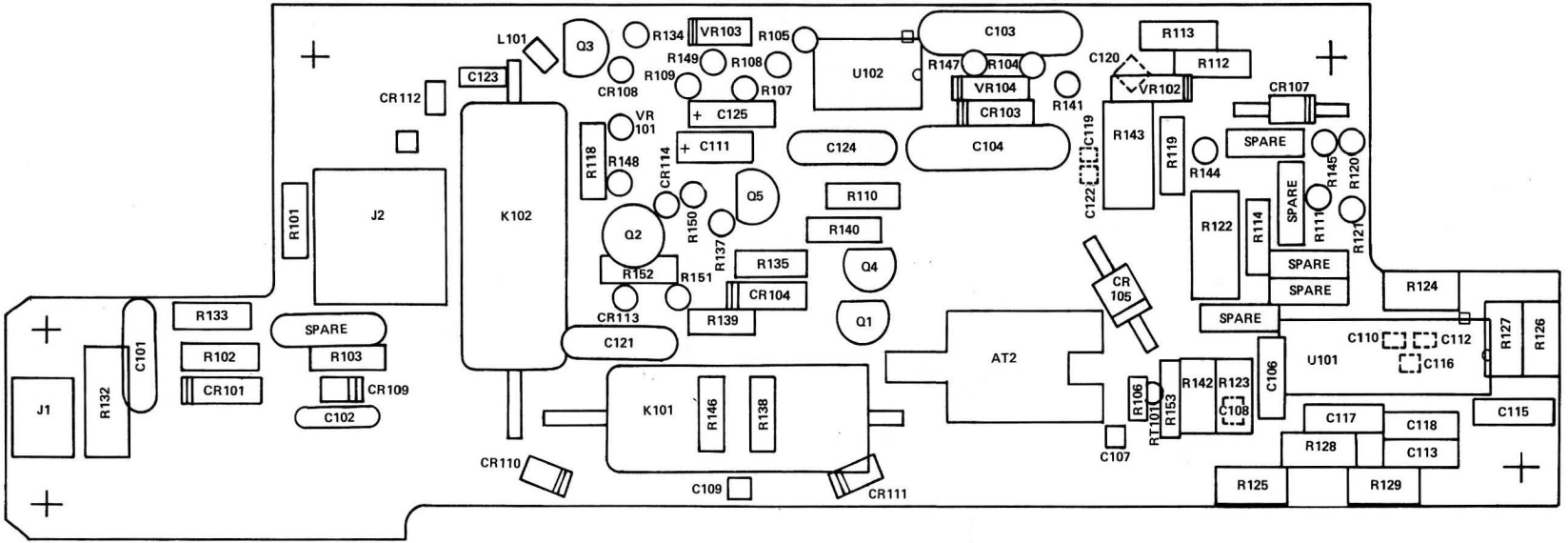

Power Meter Protection A11A1

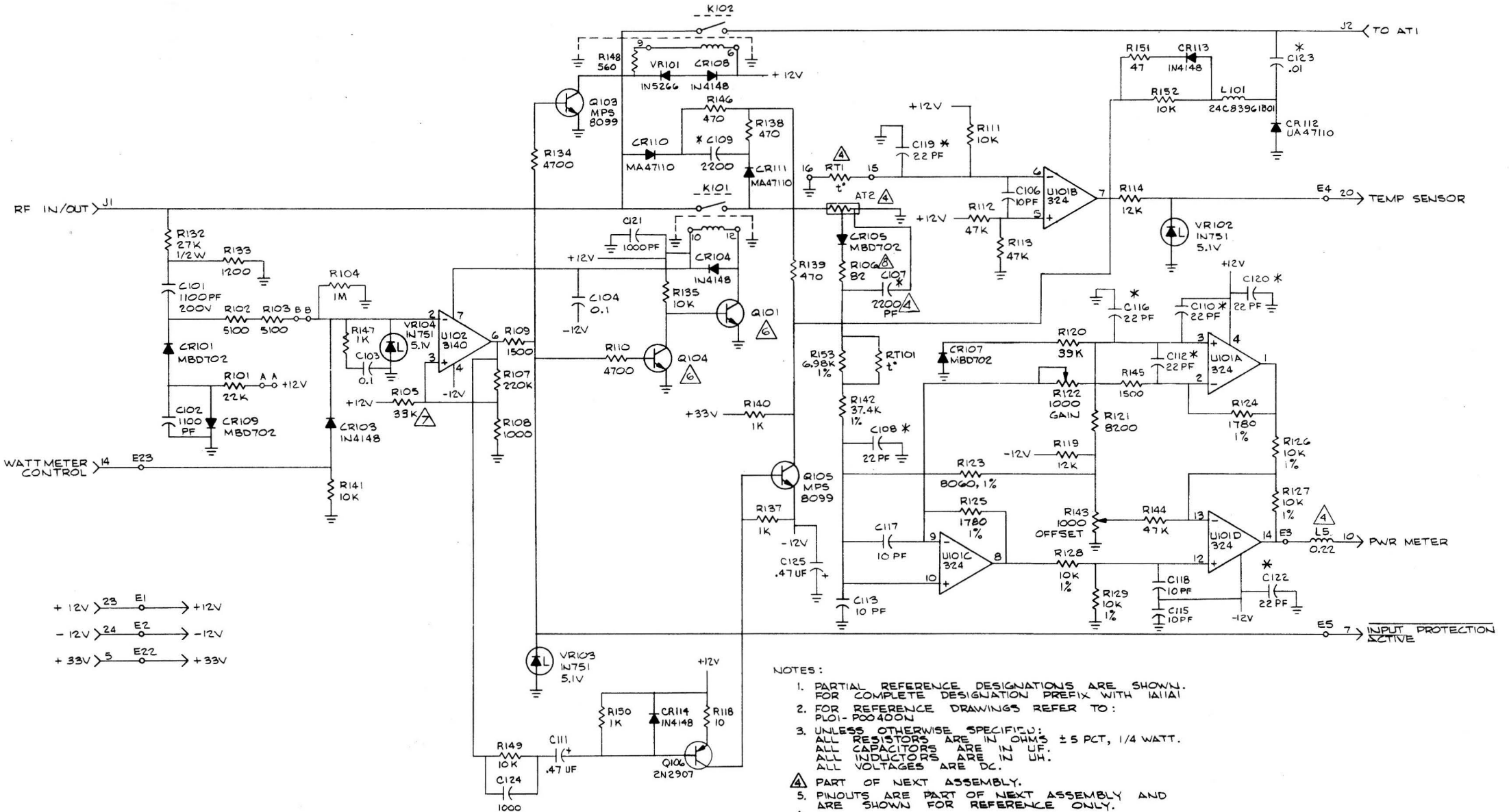

NOTES:

1. PARTIAL REFERENCE DESIGNATIONS ARE SHOWN. FOR COMPLETE DESIGNATION PREFIX WITH A11A1
2. FOR REFERENCE DRAWINGS REFER TO: PL01-P00400N
3. UNLESS OTHERWISE SPECIFIED: ALL RESISTORS ARE IN OHMS ±5 PCT, 1/4 WATT. ALL CAPACITORS ARE IN UF. ALL INDUCTORS ARE IN UH. ALL VOLTAGES ARE DC.
4. PART OF NEXT ASSEMBLY.
5. PINOUTS ARE PART OF NEXT ASSEMBLY AND ARE SHOWN FOR REFERENCE ONLY.
6. MOTOROLA PART NUMBER 48R00869570 (MPS6520).
7. R105 MAY BE SELECTED FROM: 27K, 33K NOM, OR 39K.
8. R106 MAY BE SELECTED FROM: 68, 75, 82 NOM, 91, OR 100Ω.
9. * MEANS CHIP CAP.

REF DES	DEVICE TYPE	+12V	-12V	NO CONN
U101	MLM324	4	11	
U102	CA3140	7	4	1, 5, 8

Figure 17-3. RF Input/Wattmeter Card A11A1 Schematic Diagram (RTC-4061A)

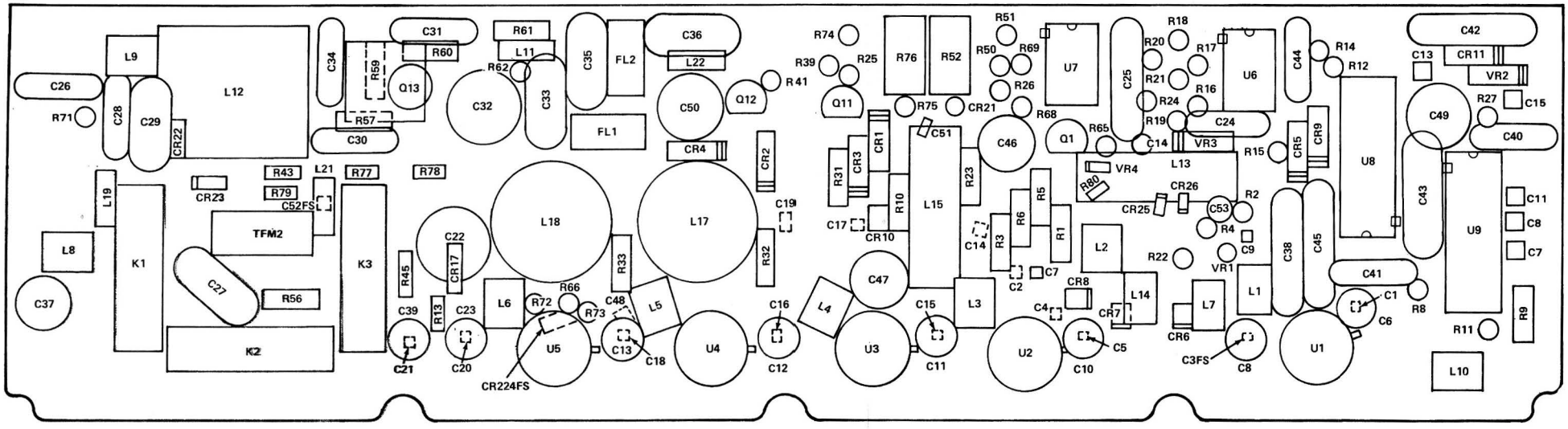

Wideband Amplifier A11A2

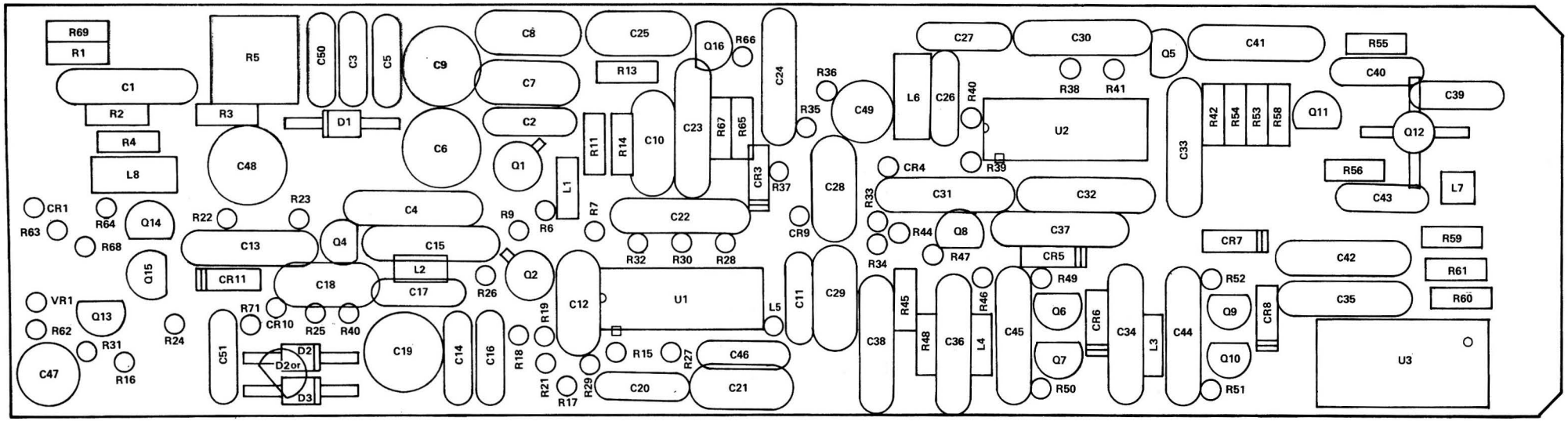

Offset Generator A11A3

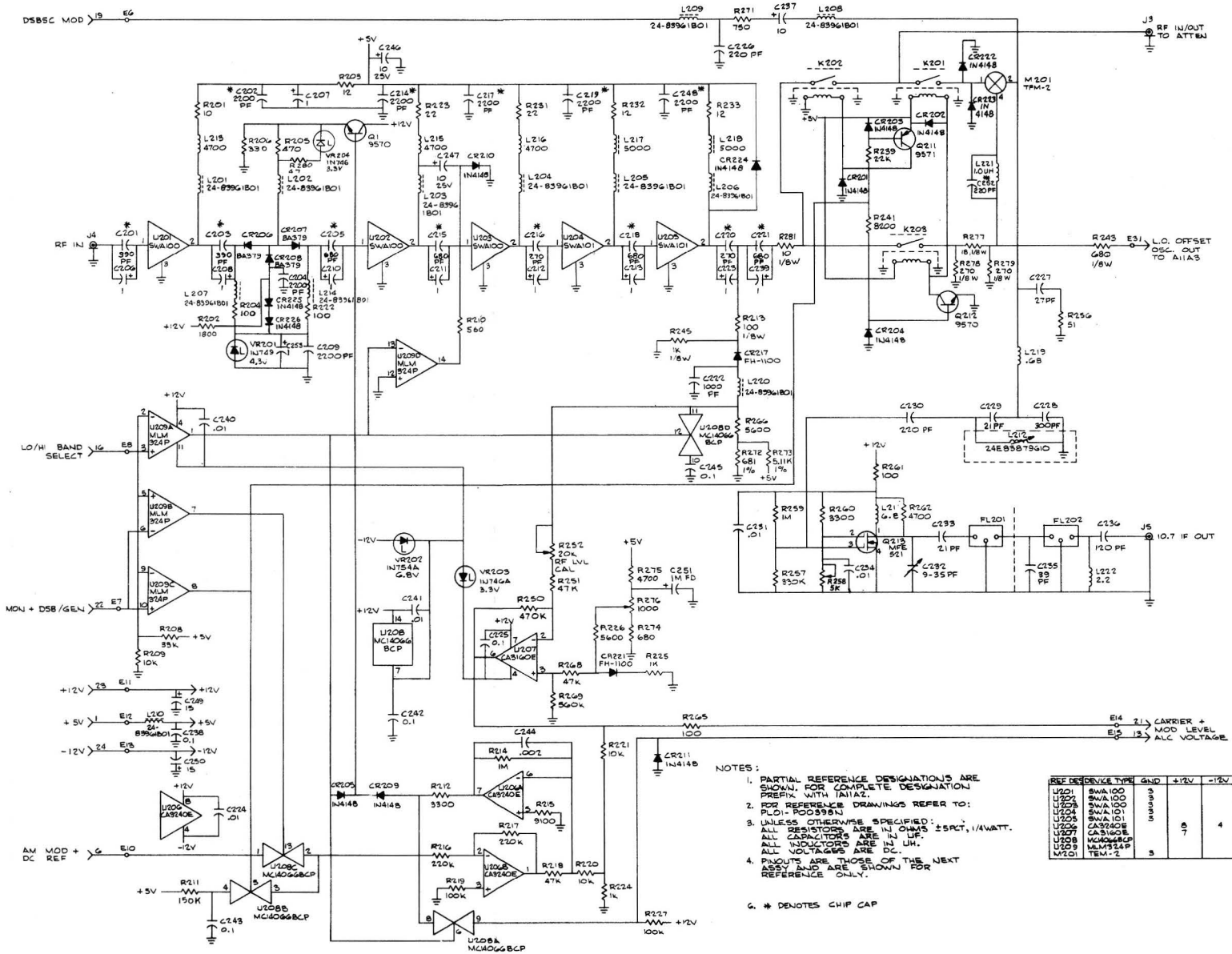

NOTES:

1. PARTIAL REFERENCE DESIGNATIONS ARE SHOWN. FOR COMPLETE DESIGNATION PREFIX WITH 1A11A2.
2. FOR REFERENCE DRAWINGS REFER TO: PL01- P00398N
3. UNLESS OTHERWISE SPECIFIED: ALL RESISTORS ARE IN OHMS ±5PCT, 1/4WATT. ALL CAPACITORS ARE IN UF. ALL INDUCTORS ARE IN UH. ALL VOLTAGES ARE DC.
4. PINOUTS ARE THOSE OF THE NEXT ASSY AND ARE SHOWN FOR REFERENCE ONLY.

6. * DENOTES CHIP CAP

REF DES	DEVICE TYPE	GND	+12V	-12V	NO CONN
U201	SWA100	3			
U202	SWA100	3			
U203	SWA100	3			
U204	SWA101	3			
U205	SWA101	3			
U206	CA3240E		8	4	
U207	CA3160E		7		
U208	MC14066BCP				1,5
U209	MLM324P				4,11
M201	TEM-2	3			

Figure 17-4. Wideband Amplifier Card A11A2 Schematic Diagram (RTC-4015A)

NOTES:

1. PARTIAL REFERENCE DESIGNATIONS ARE SHOWN. FOR COMPLETE DESIGNATION PREFIX WITH 1A11A3
2. FOR REFERENCE DRAWINGS REFER TO: ASSY 01-P00399N
3. UNLESS OTHERWISE SPECIFIED: ALL RESISTORS ARE IN OHMS ± 5 PCT, 1/4 WATT. ALL CAPACITORS ARE IN UF. ALL INDUCTORS ARE IN UH ALL VOLTAGES ARE IN DC.
4. PINOUTS ARE A PART OF THE NEXT ASSEMBLY AND ARE SHOWN FOR REFERENCE ONLY.

⚠5 C318 MAY BE SELECTED IN TEST FROM 68, 100 OR 120 PF.

REF DES	DEVICE TYPE	GND	NO CONN
U301	MC1496P	14	7,9,11,13
U302	MC1733P		2,3,4,6,9,11,12
U303	SRA-2	2,5,6,7	

REF DESIGNATIONS	
HIGHEST USED	NOT USED
C351 CR311 D303 L308 Q316 R371 U303 VR301	C302 CR302 Q303 R312,320,331,345,357 R308,310

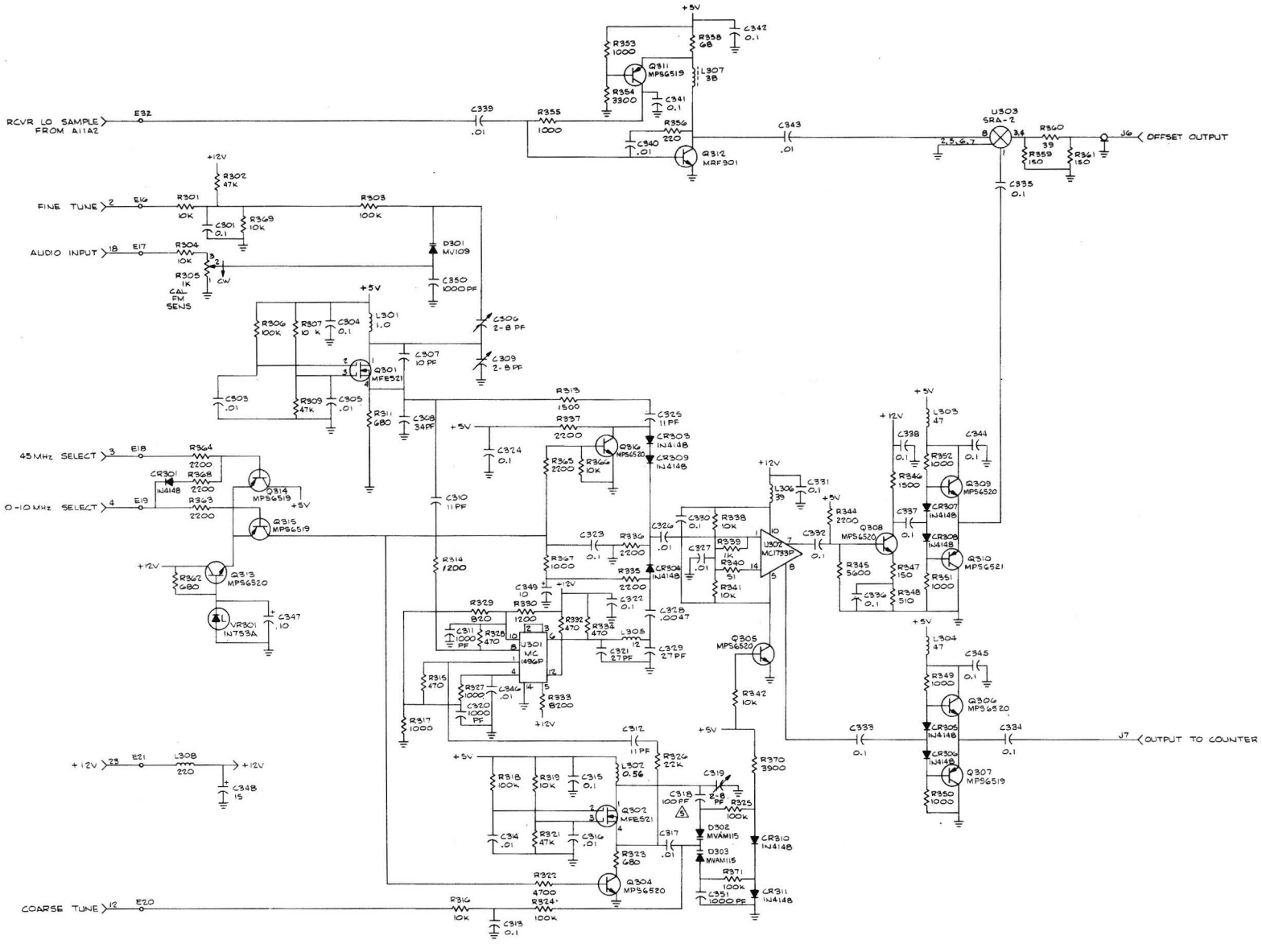

Figure 17-5. Offset Generator Card A11A3 Schematic Diagram (RTC-4016A)

RF Input Module A11
RTC-1003A

d No.	Qty. Req.	Part No.	Nomenclature	Part Value
	1	27-80335A30	HOUSING,RF FRONTEND	
	1	15-80346A21	COVER,MODULE	OFFSET GENERATOR
3	1	15-80335A32	COVER,MODULE	WIDE-BAND AMPL.
4	1	15-80335A33	COVER,MODULE-RF	PROTECTION-WATTMETER
	8	MS35206-213	SCREW,PH	4-40X.250
	23	3-134212	SCREW,THD FORMING	4-40X.312
7	20	0541008380	SCREW,FH SWAGEFORM	4-40X.250
8	8	03-15013G11	SCREW,PH	2-56X.312
	10	MS35338-40	WASHER,LOCK	NO.4
	10	MS27183-3	WASHER,FLAT	NO.4
1	16	MS35338-39	WASHER,LOCK	NO.2
2	13	NAS620C2	WASHER,FLAT	NO.2
	AR	SN63WRMAP3	SOLDER	
	AR	11-14167A01	INK	BLACK
	AR	30-84421F13	CABLE,RF	WHITE
6	AR		WIRE	22 WHT
	1	07-P00208N001	BRACKET,FRONT ATT	
	1	07-P00209N001	BRACKET,REAR ATT	
	2	2053-440-SS-20	SPACER	
0	2	MS24693-S1	SCREW,FH	4-40X3/16
	4	MS35206-227	SCREW	6-32X.312
	2	NAS620C6	WASHER,FLAT	NO.6
	4	MS35338-41	WASHER,LOCK	NO.6
27	AR	8-2	EPOXY,ABELSTIK	
28	4	30-P00229N001	CABLE ASSEMBLY	
	1	07-P00318N001	BRACKET,CHOKE MNTG	
	4	29-14070A91	TERMINAL	
31	1	43-P06840R001	SPACER,CONNECTOR	
32	2	42-P06849R001	STRAP,CLAMP,CABLE	
	1	29-15122A05	TERMINAL,LUG	
	1	29-P06850R001	TERMINAL,SOLDER	
35	AR	G-642	COMPOUND,THERMAL	
36	2	MS35206-215	SCREW	4-40X.375
	AR	M23053/5-103-9	INSULATION SLEEVING	.093 WHT
	AR		TAPE	NATURAL
40	2	813	TERMINAL LUG,NO.12	.018 BRASS HOT TIN
42	AR		WIRE,BUS	24
	AR		INSULATION SLEEVING	22 WHT
	1	26-P00346N001	SHIELD,AT2 CHEM MILL	
45	1	32-P06853R001	EMI GASKET	
46	AR	M23053/5-104-9	INSULATION SLEEVING	.125 WHT
	AR	SN62WRMAP3	SOLDER	
	AR		COMPOUND,THD LKG,BLUETYPE II,GR N242	
	2	03-15013G09	SCREW	2-56X.187
51	1	64-P04136T001	COVER,STIFFENER	
5	10	MS24693-S3	SCREW	4-40X5/16
	4	5610-21-31	WASHER	N0.4
	2	03-15013G09	SCREW	2-56X.187
001	1	RTC-4061A	RF PROTECTION & PWR M	
002	1	RTC-4015A	RF CONV/WB AMPL PWB A	
3	1	RTC-4016A	OFFSET GENERATOR	
T001	1	58-80335A47	ATTENUATOR	
T002	1	58-P00312N001	TERMINATION,RF	50OHM
01	1	2499-003X5W502AA	CAPACITOR	5000PF-GMV-500
02	1	2499-003X5W502AA	CAPACITOR	5000PF-GMV-500
003	1	2499-003X5W502AA	CAPACITOR	5000PF-GMV-500
004	1	2499-003X5W502AA	CAPACITOR	5000PF-GMV-500
05	1	2499-003X5W502AA	CAPACITOR	5000PF-GMV-500
16	1	2499-003X5W502AA	CAPACITOR	5000PF-GMV-500
017	1	2499-003X5U102M	CAPACITOR	1000PF-20-500
018	1	2499-003X5W502AA	CAPACITOR	5000PF-GMV-500
19	1	2499-003X5W502AA	CAPACITOR	5000PF-GMV-500

Find No.	Qty. Req.	Part Number	Nomenclature	Part Value
C 020	1	2499-003X5W502AA	CAPACITOR	5000PF-GMV-500
C 021	1	2499-003X5W502AA	CAPACITOR	5000PF-GMV-500
C 022	1	2499-003X5W502AA	CAPACITOR	5000PF-GMV-500
C 023	1	2499-003X5W502AA	CAPACITOR	5000PF-GMV-500
C 107	1	VJ0805X222MF	CAPACITOR	2200PF-20-100
FL006	1	91-80346A12	FILTER	
FL007	1	91-80346A12	FILTER	
FL008	1	91-80346A12	FILTER	
FL010	1	91-80346A12	FILTER	
FL011	1	91-80346A12	FILTER	
FL012	1	91-80346A12	FILTER	
FL013	1	91-80346A12	FILTER	
FL014	1	91-80346A12	FILTER	
FL015	1	91-80346A12	FILTER	
J 001	1	M39012/04-0002	CONNECTOR,RF	TYPE N
J 002	1	2051-1201	CONNECTOR,RF	
J 005	1	9C84135B02	JACK,PHONO	
J 007	1	9C84135B02	JACK,PHONO	
L 001	1	MS90539-07	COIL	470UH
L 002	1	MS90539-07	COIL	470UH
L 003	1	25-83127G01	CHOKE	
L 005	1	MS75083-5	COIL	.22UH
L 006	1	MS75083-3	COIL	.15UH-10
L 007	1	MS75083-3	COIL	.15UH-10
L 008	1	MS75083-3	COIL	.15UH-10
L 009	1	MS75083-3	COIL	.15UH-10
L 010	1	MS75083-3	COIL	.15UH-10
L 011	1	MS75083-3	COIL	.15UH-10
P 001	1	01-80304A53	CABLE ASSEMBLY	24PIN-181N-SIDE
P 002	1	01-80304A54	CABLE ASSEMBLY	16PIN-101N-END
RT001	1	06C83600K05	THERMISTOR	
S 013	1	40-P00330N001	WAFER,SWITCH	

RF Input/Wattmeter Protect PWB A11A1
RTC-4061A

Find No.	Qty. Req.	Part No.	Nomenclature	Part Value
001	1	84-P00459N001	PWB, RF PROT & PWR ME	
002	AR	SN63WRMAP3	SOLDER	
003	AR	SN63WRP3	SOLDER	
004	AR	SN62WRMAP3	SOLDER	
005	AR	11-14167A01	INK	BLACK
006	AR		INSULATION SLEEVING	24 WHT
007	1	26-P00347N001	SHIELD,RF FENCE CHEM-	
008	AR		WIRE	24 WHT
C 101	1	21D83596E32	CAPACITOR	1100PF-5-200
C 102	1	21D83596E32	CAPACITOR	1100PF-5-200
C 103	1	21C82372C09	CAPACITOR	.1UF80-20-25
C 104	1	21C82372C09	CAPACITOR	.1UF80-20-25
C 106	1	M39014/01-1321	CAPACITOR	10PF-10-200
C 108	1	VJ0805A220JF	CAPACITOR	22PF-5-100
C 109	1	VJ0805X222MF	CAPACITOR	2200PF-20-100
C 110	1	VJ0805A220JF	CAPACITOR	22PF-5-100
C 111	1	23D84762H14	CAPACITOR	.47UF-20-50
C 112	1	VJ0805A220JF	CAPACITOR	22PF-5-100
C 113	1	M39014/01-1321	CAPACITOR	10PF-10-200
C 115	1	M39014/01-1321	CAPACITOR	10PF-10-200
C 116	1	VJ0805A220JF	CAPACITOR	22PF-5-100
C 117	1	M39014/01-1321	CAPACITOR	10PF-10-200
C 118	1	M39014/01-1321	CAPACITOR	10PF-10-200
C 119	1	VJ0805A220JF	CAPACITOR	22PF-5-100
C 120	1	VJ0805A220JF	CAPACITOR	22PF-5-100
C 121	1	21D82187B14	CAPACITOR	1000PF-10-100

Find No.	Qty. Req.	Part No.	Nomenclature	Part Value
C 122	1	VJ0805A220JF	CAPACITOR	22PF-5-100
C 123	1	21-P14473A127	CAPACITOR	.01UF-20-50
C 124	1	21D82187B14	CAPACITOR	1000PF-10-100
C 125	1	23D84762H14	CAPACITOR	.47UF-20-50
CR101	1	MBD702	DIODE	
CR103	1	48-84463K02	DIODE	
CR104	1	48-84463K02	DIODE	
CR105	1	48-80345A64	DIODE	
CR107	1	48-80345A64	DIODE	
CR108	1	48-84463K02	DIODE	
CR109	1	48-80345A64	DIODE	
CR110	1	48-80345A65	DIODE	
CR111	1	48-80345A65	DIODE	
CR112	1	48-80345A65	DIODE	
CR113	1	48-84463K02	DIODE	
CR114	1	48-84463K02	DIODE	
K 101	1	01-80304A41	RELAY ASSEMBLY	
K 102	1	01-80304A41	RELAY ASSEMBLY	
L 101	1	24C83961B01	CHOKE	
Q 101	1	48R00869570	TRANSISTOR	
Q 103	1	48-80345A51	TRANSISTOR	
Q 104	1	48R00869570	TRANSISTOR	
Q 105	1	48-80345A51	TRANSISTOR	
Q 106	1	48-6123A22	TRANSISTOR	
R 101	1	6S124A81	RESISTOR	22K-5-1/4
R 102	1	6S124A66	RESISTOR	5.1K-5-1/4
R 103	1	6S124A66	RESISTOR	5.1K-5-1/4
R 104	1	6S124B22	RESISTOR	1M-5-1/4
R 105	1	6S124A85	RESISTOR	33K-5-1/4 NOMINAL
R 105	S01	6S124A83	RESISTOR	27K-5-1/4
R 105	S01	6S124A87	RESISTOR	39K-5-1/4
R 106	1	6S124A23	RESISTOR	82-5-1/4 NOMINAL
R 106	S01	6S124A21	RESISTOR	68-5-1/4
R 106	S01	6S124A22	RESISTOR	75-5-1/4
R 106	S01	6S124A24	RESISTOR	91-5-1/4
R 106	S01	6S124A25	RESISTOR	100-5-1/4
R 107	1	6S124B06	RESISTOR	220K-5-1/4
R 108	1	6S124A49	RESISTOR	1K-5-1/4
R 109	1	6S124A53	RESISTOR	1.5K-5-1/4
R 110	1	6S124A65	RESISTOR	4.7K-5-1/4
R 111	1	6S124A73	RESISTOR	10K-5-1/4
R 112	1	6S124A89	RESISTOR	47K-5-1/4
R 113	1	6S124A89	RESISTOR	47K-5-1/4
R 114	1	6S124A75	RESISTOR	12K-5-1/4
R 118	1	6S124A01	RESISTOR	10-5-1/4
R 119	1	6S124A75	RESISTOR	12K-5-1/4
R 120	1	6S124A87	RESISTOR	39K-5-1/4
R 121	1	6S124A71	RESISTOR	8.2K-5-1/4
R 122	1	18D83452F09	RESISTOR,VARIABLE	1K
R 123	1	06D83175C90	RESISTOR	8.06K-1-1/4
R 124	1	06-10621C19	RESISTOR	1780-1-1/8
R 125	1	06-10621C19	RESISTOR	1780-1-1/8
R 126	1	06D83175C03	RESISTOR	10K-1-1/4
R 127	1	06D83175C03	RESISTOR	10K-1-1/4
R 128	1	06D83175C03	RESISTOR	10K-1-1/4
R 129	1	06D83175C03	RESISTOR	10K-1-1/4
R 132	1	6S125A83	RESISTOR	27K-5-1/2
R 133	1	6S124A51	RESISTOR	1.2K-5-1/4
R 134	1	6S124A65	RESISTOR	4.7K-5-1/4
R 135	1	6S124A73	RESISTOR	10K-5-1/4
R 137	1	6S124A49	RESISTOR	1K-5-1/4
R 138	1	6S124A41	RESISTOR	470-5-1/4
R 139	1	6S124A41	RESISTOR	470-5-1/4
R 140	1	6S124A49	RESISTOR	1K-5-1/4
R 141	1	6S124A73	RESISTOR	10K-5-1/4
R 142	1	06D83175C51	RESISTOR	37.4K-1-1/4
R 143	1	18D83452F09	RESISTOR,VARIABLE	1K

Find No.	Qty. Req.	Part Number	Nomenclature	Part Value
R 144	1	6S124A89	RESISTOR	47K-5-1/4
R 145	1	6S124A53	RESISTOR	1.5K-5-1/4
R 146	1	6S124A41	RESISTOR	470-5-1/4
R 147	1	6S124A49	RESISTOR	1K-5-1/4
R 148	1	6S124A43	RESISTOR	560-5-1/4
R 149	1	6S124A73	RESISTOR	10K-5-1/4
R 150	1	6S124A49	RESISTOR	1K-5-1/4
R 151	1	6S124A17	RESISTOR	47-5-1/4
R 152	1	6S124A73	RESISTOR	10K-5-1/4
R 153	1	6D83175C88	RESISTOR	
RT101	1	6C83600K05	THERMISTOR	
U 101	1	51R84320A80	INTEGRATED CIRCUIT	
U 102	1	51-80345A01	INTEGRATED CIRCUIT	
VR101	1	48-80345A84	DIODE,ZENER	
VR102	1	48-82556C15A	DIODE,ZENER	5.1V-5-.4
VR103	1	48-82556C15A	DIODE,ZENER	5.1V-5-.4
VR104	1	48-82556C15A	DIODE,ZENER	5.1V-5-.4

RF Converter/Wideband Amplifier PWB A11A2
RTC-4015A

Find No.	Qty. Req.	Part No.	Nomenclature	Part Value
001	1	84-P00453N001	PWB, RF CONV/WB AMPLR	
002	AR	SN62WRMAP3	SOLDER	
.910				
003	AR	11-14167A01	INK	BLACK
004	AR	SN63WRP3	SOLDER	
005	AR	SN63WRMAP3	SOLDER	
006	1	26-P00234N001	SHIELD,CAN	
007	1	26-P00235N001	SHIELD,FILTER	
008	AR	RTV3145	ADHESIVE,SILICONE	
009	1	26-P06855R001	SHIELD	
010	AR	M23053/5-105-9	INSULATING SLEEVING	.187 WHT
011	AR	30-84421F13	CABLE,RF	WHITE
012	AR		WIRE,BUS	22
013	AR		INSULATION SLEEVING	20 WHT
014	AR		INSULATION SLEEVING	24 WHT
014	1	26-P04143T001	SHIELD	
C 201	1	VJ0805X391MF	CAPACITOR	390PF-20-100
C 202	1	VJ0805X222MF	CAPACITOR	2200PF-20-100
C 203	1	VJ0805X391MF	CAPACITOR	390PF-20-100
C 204	1	VJ0805X222MF	CAPACITOR	2200PF-20-100
C 205	1	VJ0805X681MF	CAPACITOR	680PF-20-100
C 206	1	23D83441B15	CAPACITOR	1.0UF-20-35
C 207	1	23D83441B15	CAPACITOR	1.0UF-20-35
C 208	1	23D83441B15	CAPACITOR	1.0UF-20-35
C 209	1	VJ0805X222MF	CAPACITOR	2200PF-20-100
C 210	1	23D83441B15	CAPACITOR	1.0UF-20-35
C 211	1	23D83441B15	CAPACITOR	1.0UF-20-35
C 212	1	23D83441B15	CAPACITOR	1.0UF-20-35
C 213	1	23D83441B15	CAPACITOR	1.0UF-20-35
C 214	1	VJ0805X222MF	CAPACITOR	2200PF-20-100
C 215	1	VJ0805X681MF	CAPACITOR	680PF-20-100
C 216	1	VJ0805X271MF	CAPACITOR	270PF-20-100
C 217	1	VJ0805X222MF	CAPACITOR	2200PF-20-100
C 218	1	VJ0805X681MF	CAPACITOR	680PF-20-100
C 219	1	VJ0805X222MF	CAPACITOR	2200PF-20-100
C 220	1	VJ0805X271MF	CAPACITOR	270PF-20-100
C 221	1	VJ0805X681MF	CAPACITOR	680PF-20-100
C 222	1	54-803-004-102P	CAPACITOR	1000PF100-0-500

ASSEMBLY PARTS LIST
RF Input Module
(Sheet 1)

Find No.	Qty. Req.	Part No.	Nomenclature	Part Value
C 223	1	23D83441B15	CAPACITOR	1.0UF-20-35
C 224	1	21D82428B62	CAPACITOR	.01UF80-20-200
C 225	1	21C82372C09	CAPACITOR	.1UF80-20-25
C 226	1	21D82187B08	CAPACITOR	220PF-10-500
C 227	1	21D84494B42	CAPACITOR	27PF-5-500
C 228	1	CM04FC301J03	CAPACITOR	330PF-5-300
C 229	1	21D84494B40	CAPACITOR	21PF-5-500
C 230	1	21D82187B08	CAPACITOR	220PF-10-500
C 231	1	21D82428B62	CAPACITOR	.01UF80-20-200
C 232	1	CV31D350	CAPACITOR	9 TO 35PF-200
C 233	1	21D84494B40	CAPACITOR	21PF-5-500
C 234	1	21D82428B62	CAPACITOR	.01UF80-20-200
C 235	1	21D84494B24	CAPACITOR	39PF-5-500
C 236	1	21D84494B06	CAPACITOR	120PF-5-500
C 237	1	23D84665F01	CAPACITOR	10UF-25V
C 238	1	21C82372C09	CAPACITOR	.1UF80-20-25
C 239	1	23D83441B15	CAPACITOR	1.0UF-20-35
C 240	1	21D82428B62	CAPACITOR	.01UF80-20-200
C 241	1	21D82428B62	CAPACITOR	.01UF80-20-200
C 242	1	21C82372C09	CAPACITOR	.1UF80-20-25
C 243	1	21C82372C09	CAPACITOR	.1UF80-20-25
C 244	1	21D82428B36	CAPACITOR	2000PF-10-200
C 245	1	21C82372C09	CAPACITOR	.1UF80-20-25
C 246	1	23D84665F01	CAPACITOR	10UF-25V
C 247	1	23D84665F01	CAPACITOR	10UF-25V
C 248	1	VJ0805X222MF	CAPACITOR	2200PF-20-100
C 249	1	23D84665F02	CAPACITOR	15UF-25V
C 250	1	23D84665F02	CAPACITOR	15UF-25V
C 251	1	23D83441B15	CAPACITOR	1.0UF-20-35
C 252	1	VJ0805A221GF	CAPACITOR	220PF-2-100
C 253	1	23D83441B15	CAPACITOR	1.0UF-20-35
CR201	1	48-84463K02	DIODE	
CR202	1	48-84463K02	DIODE	
CR203	1	48-84463K02	DIODE	
CR204	1	48-84463K02	DIODE	
CR205	1	48-84463K02	DIODE	
CR206	1	48-80345A62	DIODE	
CR207	1	48-80345A62	DIODE	
CR208	1	48-80345A62	DIODE	
CR209	1	48-84463K02	DIODE	
CR210	1	48-84463K02	DIODE	
CR211	1	48-84463K02	DIODE	
CR217	1	48-80310A74	DIODE	
CR221	1	48-80310A74	DIODE	
CR222	1	48-84463K02	DIODE	
CR223	1	48-84463K02	DIODE	
CR224	1	48-84463K02	DIODE	
CR225	1	48-84463K02	DIODE	
CR226	1	48-84463K02	DIODE	
FL201	1	SFE-10.7MA-5A	FILTER	
FL202	1	SFE-10.7MA-5A	FILTER	
J 003	1	2004-7188	CONNECTOR	
J 004	1	2004-7188	CONNECTOR	
K 201	1	228-4-1A	RELAY	
K 202	1	228-4-1A	RELAY	
K 203	1	228-4-1A	RELAY	
L 201	1	24C83961B01	CHOKE,RF	
L 202	1	24C83961B01	CHOKE,RF	
L 203	1	24C83961B01	CHOKE,RF	
L 204	1	24C83961B01	CHOKE,RF	
L 205	1	24C83961B01	CHOKE,RF	
L 206	1	24C83961B01	CHOKE,RF	
L 207	1	24C83961B01	CHOKE,RF	
L 208	1	24C83961B01	CHOKE,RF	

Find No.	Qty. Req.	Part No.	Nomenclature	Part Value
L 209	1	24C83961B01	CHOKE,RF	
L 210	1	24C83961B01	CHOKE,RF	
L 211	1	MS75084-10	COIL,RF	6.8UH
L 212	1	24E83879G10	CHOKE,VARIABLE	
L 213	1	MS90541-03	COIL	4700UH
L 214	1	24C83961B01	CHOKE,RF	
L 215	1	MS90541-03	COIL	4700UH
L 216	1	MS90541-03	COIL	4700UH
L 217	1	24-P00255N001	CHOKE	5000UH
L 218	1	24-P00255N001	CHOKE	5000UH
L 219	1	MS75083-11	COIL	.68UH
L 220	1	24C83961B01	CHOKE	
L 221	1	DD-1.00-5	COIL	1.0UH-5
L 222	1	MS75084-4	COIL	2.2UH
M 201	1	51-80346A05	MIXER	
Q 201	1	48R00869570	TRANSISTOR	
Q 211	1	48R00869571	TRANSISTOR	
Q 212	1	48R00869570	TRANSISTOR	
Q 213	1	48-80345A42	TRANSISTOR	
R 201	1	6S124A01	RESISTOR	10-5-1/4
R 202	1	6S124A55	RESISTOR	1.8K-5-1/4
R 203	1	6S124A03	RESISTOR	12-5-1/4
R 204	1	6S124A25	RESISTOR	100-5-1/4
R 205	1	6S124A41	RESISTOR	470-5-1/4
R 206	1	6S124A37	RESISTOR	330-5-1/4
R 208	1	6S124A85	RESISTOR	33K-5-1/4
R 209	1	6S124A73	RESISTOR	10K-5-1/4
R 210	1	6S124A43	RESISTOR	560-5-1/4
R 211	1	6S124B02	RESISTOR	150K-5-1/4
R 212	1	6S124A61	RESISTOR	3.3K-5-1/4
R 213	1	6S185A25	RESISTOR	100-5-1/8
R 214	1	6S124B22	RESISTOR	1M-5-1/4
R 215	1	6S124A72	RESISTOR	9.1K-5-1/4
R 216	1	6S124B06	RESISTOR	220K-5-1/4
R 217	1	6S124B06	RESISTOR	220K-5-1/4
R 218	1	6S124A89	RESISTOR	47K-5-1/4
R 219	1	6S124A97	RESISTOR	100K-5-1/4
R 220	1	6S124A73	RESISTOR	10K-5-1/4
R 221	1	6S124A73	RESISTOR	10K-5-1/4
R 222	1	6S124A25	RESISTOR	100-5-1/4
R 223	1	6S124A09	RESISTOR	22-5-1/4
R 224	1	6S124A49	RESISTOR	1K-5-1/4
R 225	1	6S124A49	RESISTOR	1K-5-1/4
R 226	1	6S124A67	RESISTOR	5.6K-5-1/4
R 227	1	6S124A97	RESISTOR	100K-5-1/4
R 231	1	6S124A09	RESISTOR	22-5-1/4
R 232	1	6S124A03	RESISTOR	12-5-1/4
R 233	1	6S124A03	RESISTOR	12-5-1/4
R 239	1	6S124A81	RESISTOR	22K-5-1/4
R 241	1	6S124A71	RESISTOR	8.2K-5-1/4
R 243	1	6S185A45	RESISTOR	680-5-1/8
R 245	1	6S185A49	RESISTOR	1K-5-1/8
R 250	1	6S124B14	RESISTOR	470K-5-1/4
R 251	1	6S124A89	RESISTOR	47K-5-1/4
R 252	1	18D83452F15	RESISTOR,VARIABLE	20K
R 256	1	6S124A18	RESISTOR	51-5-1/4
R 257	1	6S124B10	RESISTOR	330K-5-1/4
R 258	1	18-80346A20	RESISTOR,VARIABLE	5K
R 259	1	6S124B22	RESISTOR	1M-5-1/4
R 260	1	6S124A61	RESISTOR	3.3K-5-1/4
R 261	1	6S124A25	RESISTOR	100-5-1/4
R 262	1	6S124A65	RESISTOR	4.7K-5-1/4
R 265	1	6S124A25	RESISTOR	100-5-1/4
R 266	1	6S124A67	RESISTOR	5.6K-5-1/4

ASSEMBLY PARTS LIST

RF Input Module
(Sheet 2)

Find No.	Qty. Req.	Part No.	Nomenclature	Part Value
R 268	1	6S124A89	RESISTOR	47K-5-1/4
R 266	1	6S124A67	RESISTOR	5.6K-5-1/4
R 268	1	6S124A89	RESISTOR	47K-5-1/4
R 269	1	6S124B16	RESISTOR	560K-5-1/4
R 271	1	6S124A46	RESISTOR	750-5-1/4
R 272	1	06-10621B78	RESISTOR	681-1-1/8
R 273	1	06-10621C63	RESISTOR	5.11K-1-1/8
R 274	1	6S124A45	RESISTOR	680-5-1/4
R 275	1	6S124A65	RESISTOR	4.7K-5-1/4
R 276	1	18D83452F09	RESISTOR,VARIABLE	1K
R 277	1	6S185A07	RESISTOR	18-5-1/8
R 278	1	6S185A35	RESISTOR	270-5-1/8
R 279	1	6S185A35	RESISTOR	270-5-1/8
R 280	1	6S124A17	RESISTOR	47-5-1/4
R 281	1	6S185A01	RESISTOR	10-5-1/8
U 201	1	51-80345A34	INTEGRATED CIRCUIT	
U 202	1	51-80345A34	INTEGRATED CIRCUIT	
U 203	1	51-80345A34	INTEGRATED CIRCUIT	
U 204	1	51-80345A35	INTEGRATED CIRCUIT	
U 205	1	51-80345A35	INTEGRATED CIRCUIT	
U 206	1	51-80345A04	INTEGRATED CIRCUIT	
U 207	1	51-80345A02	INTEGRATED CIRCUIT	
U 208	1	51-84887K73	INTEGRATED CIRCUIT	
U 209	1	51R84320A80	INTEGRATED CIRCUIT	
VR201	1	48-83461E13	DIODE,ZENER	
VR202	1	48-80345A92A	DIODE, ZENER	
VR203	1	48-83624E52	DIODE, ZENER	
VR204	1	48-83624E52	DIODE,ZENER	

Offset Generator PWB A11A3
RTC-4016A

Find No.	Qty. Req.	Part No.	Nomenclature	Part Value
001	1	84-P00458N001	PWB OFFSET GENERATOR	
002	AR	SN63WRMAP3	SOLDER	
003	AR	11-14167A01	INK	BLACK
004	AR	SN63WRP3	SOLDER	
005	1	26-P00345N001	SHIELD	
006	AR	M23053/5-105-9	INSULATING SLEEVING	.187 WHT
007	AR	30-84421F13	CABLE,RF	WHITE
C 301	1	21C82372C09	CAPACITOR	.1UF80-20-25
C 303	1	21D82428B62	CAPACITOR	.01UF80-20-200
C 304	1	21C82372C09	CAPACITOR	.1UF80-20-25
C 305	1	21D82428B62	CAPACITOR	.01UF80-20-200
C 306	1	CV31A080	CAPACITOR,VARIABLE	2 TO 8PF-350
C 307	1	21K840811	CAPACITOR	10PF-N470
C 308	1	21D84494B30	CAPACITOR	34PF-5-500
C 309	1	CV31A080	CAPACITOR,VARIABLE	2 TO 8PF-350
C 310	1	21D84494B37	CAPACITOR	11PF-5-500
C 311	1	21D82187B14	CAPACITOR	1000PF-10-100
C 312	1	21D84494B37	CAPACITOR	11PF-5-500
C 313	1	21C82372C09	CAPACITOR	.1UF80-20-25
C 314	1	21D82428B62	CAPACITOR	.01UF80-20-200
C 315	1	21C82372C09	CAPACITOR	.1UF80-20-25
C 316	1	21D82428B62	CAPACITOR	.01UF80-20-200
C 317	1	21D82428B62	CAPACITOR	.01UF80-20-200
C 318	S01	21D84494B34	CAPACITOR	68PF-5-500
C 318	1	21D84494B04	CAPACITOR	100PF-5-500 NOMINAL
C 318	S01	21D84494B06	CAPACITOR	120PF-5-500
C 319	1	CV31A080	CAPACITOR,VARIABLE	2 TO 8PF-350
C 320	1	21D82187B14	CAPACITOR	1000PF-10-100
C 321	1	21D84494B42	CAPACITOR	27PF-5-500
C 322	1	21C82372C09	CAPACITOR	.1UF80-20-25
C 323	1	21C82372C09	CAPACITOR	.1UF80-20-25
C 324	1	21C82372C09	CAPACITOR	.1UF80-20-25
C 325	1	21D84494B37	CAPACITOR	11PF-5-500
C 326	1	21D82428B62	CAPACITOR	.01UF80-20-200

Find No.	Qty. Req.	Part No.	Nomenclature	Part Value
C 327	1	21D82428B62	CAPACITOR	.01UF80-20 0
C 328	1	21D82428B09	CAPACITOR	4700PF-10-100
C 329	1	21D84494B42	CAPACITOR	27PF-5-500
C 330	1	21C82372C09	CAPACITOR	.1UF80-20-
C 331	1	21C82372C09	CAPACITOR	.1UF80-20-
C 332	1	21C82372C09	CAPACITOR	.1UF80-20-
C 333	1	21C82372C09	CAPACITOR	.1UF80-20-25
C 334	1	21C82372C09	CAPACITOR	.1UF80-20-
C 335	1	21C82372C09	CAPACITOR	.1UF80-20-
C 336	1	21C82372C09	CAPACITOR	.1UF80-20-
C 337	1	21C82372C09	CAPACITOR	.1UF80-20-25
C 338	1	21C82372C09	CAPACITOR	.1UF80-20-
C 339	1	21D82428B62	CAPACITOR	.01UF80-2 0
C 340	1	21D82428B62	CAPACITOR	.01UF80-2 0
C 341	1	21C82372C09	CAPACITOR	.1UF80-20-25
C 342	1	21C82372C09	CAPACITOR	.1UF80-20-25
C 343	1	21D82428B62	CAPACITOR	.01UF80-2 0
C 344	1	21C82372C09	CAPACITOR	.1UF80-20-
C 345	1	21C82372C09	CAPACITOR	.1UF80-20-25
C 346	1	21D82428B62	CAPACITOR	.01UF80-20-200
C 347	1	23D84665F01	CAPACITOR	10UF-25V
C 348	1	23D84665F02	CAPACITOR	15UF-25V
C 349	1	23D84665F01	CAPACITOR	10UF-25V
C 350	1	21D82187B14	CAPACITOR	1000PF-10-100
C 351	1	21D82187B14	CAPACITOR	1000PF-10-
CR301	1	48-84463K02	DIODE	
CR303	1	48-84463K02	DIODE	
CR304	1	48-84463K02	DIODE	
CR305	1	48-84463K02	DIODE	
CR306	1	48-84463K02	DIODE	
CR307	1	48-84463K02	DIODE	
CR308	1	48-84463K02	DIODE	
CR309	1	48-84463K02	DIODE	
CR310	1	48-84463K02	DIODE	
CR311	1	48-84463K02	DIODE	
D 301	1	48-80345A74	VARACTOR	
D 302	1	48-80345A72	VARACTOR	
D 303	1	48-80345A72	VARACTOR	
J 006	1	2004-7188	CONNECTOR	
L 301	1	MS75083-13	COIL	1UH
L 302	1	MS75083-10	COIL	.56UH
L 303	1	MS75085-03	COIL	47UH
L 304	1	MS75085-03	COIL	47UH
L 305	1	MS75084-13	COIL	12UH
L 306	1	MS90538-02	COIL	39UH
L 307	1	24C83961B01	CHOKE,RF	
L 308	1	MS90538-20	COIL	220UH
Q 301	1	48-80345A42	TRANSISTOR	
Q 302	1	48-80345A42	TRANSISTOR	
Q 304	1	48R00869570	TRANSISTOR	
Q 305	1	48R00869570	TRANSISTOR	
Q 306	1	48R00869570	TRANSISTOR	
Q 307	1	48R00869571	TRANSISTOR	
Q 308	1	48R00869570	TRANSISTOR	
Q 309	1	48R00869570	TRANSISTOR	
Q 310	1	48R00869571	TRANSISTOR	
Q 311	1	48R00869571	TRANSISTOR	
Q 312	1	48-80345A53	TRANSISTOR	
Q 313	1	48R00869570	TRANSISTOR	
Q 314	1	48R00869571	TRANSISTOR	
Q 315	1	48R00869571	TRANSISTOR	

Find No.	Qty. Req.	Part No.	Nomenclature	Part Value
Q 316	1	48R00869570	TRANSISTOR	
R 301	1	6S124A73	RESISTOR	10K-5-1/4
R 302	1	6S124A89	RESISTOR	47K-5-1/4
R 303	1	6S124A97	RESISTOR	100K-5-1/4
R 304	1	6S124A73	RESISTOR	10K-5-1/4
R 305	1	18D83452F10	RESISTOR,VARIABLE	1K
R 306	1	6S124A97	RESISTOR	100K-5-1/4
R 307	1	6S124A73	RESISTOR	10K-5-1/4
R 309	1	6S124A89	RESISTOR	47K-5-1/4
R 311	1	6S124A45	RESISTOR	680-5-1/4
R 313	1	6S124A53	RESISTOR	1.5K-5-1/4
R 314	1	6S124A51	RESISTOR	1.2K-5-1/4
R 315	1	6S124A41	RESISTOR	470-5-1/4
R 316	1	6S124A73	RESISTOR	10K-5-1/4
R 317	1	6S124A49	RESISTOR	1K-5-1/4
R 318	1	6S124A97	RESISTOR	100K-5-1/4
R 319	1	6S124A73	RESISTOR	10K-5-1/4
R 321	1	6S124A89	RESISTOR	47K-5-1/4
R 322	1	6S124A65	RESISTOR	4.7K-5-1/4
R 323	1	6S124A45	RESISTOR	680-5-1/4
R 324	1	6S124A97	RESISTOR	100K-5-1/4
R 325	1	6S124A97	RESISTOR	100K-5-1/4
R 326	1	6S124A81	RESISTOR	22K-5-1/4
R 327	1	6S124A49	RESISTOR	1K-5-1/4
R 328	1	6S124A41	RESISTOR	470-5-1/4
R 329	1	6S124A47	RESISTOR	820-5-1/4
R 330	1	6S124A51	RESISTOR	1.2K-5-1/4
R 332	1	6S124A41	RESISTOR	470-5-1/4
R 333	1	6S124A71	RESISTOR	8.2K-5-1/4
R 334	1	6S124A41	RESISTOR	470-5-1/4
R 335	1	6S124A57	RESISTOR	2.2K-5-1/4
R 336	1	6S124A57	RESISTOR	2.2K-5-1/4
R 337	1	6S124A57	RESISTOR	2.2K-5-1/4
R 338	1	6S124A73	RESISTOR	10K-5-1/4
R 339	1	6S124A49	RESISTOR	1K-5-1/4
R 340	1	6S124A18	RESISTOR	51-5-1/4
R 341	1	6S124A73	RESISTOR	10K-5-1/4
R 342	1	6S124A73	RESISTOR	10K-5-1/4
R 344	1	6S124A57	RESISTOR	2200-5-1/4
R 345	1	6S124A67	RESISTOR	5.6K-5-1/4
R 346	1	6S124A53	RESISTOR	1.5K-5-1/4
R 347	1	6S124A29	RESISTOR	150-5-1/4
R 348	1	6S124A42	RESISTOR	510-5-1/4
R 349	1	6S124A49	RESISTOR	1K-5-1/4
R 350	1	6S124A49	RESISTOR	1K-5-1/4
R 351	1	6S124A49	RESISTOR	1K-5-1/4
R 352	1	6S124A49	RESISTOR	1K-5-1/4
R 353	1	6S124A49	RESISTOR	1K-5-1/4
R 354	1	6S124A61	RESISTOR	3.3K-5-1/4
R 355	1	6S124A49	RESISTOR	1K-5-1/4
R 356	1	6S124A33	RESISTOR	220-5-1/4
R 358	1	6S124A21	RESISTOR	68-5-1/4
R 359	1	6S124A29	RESISTOR	150-5-1/4
R 360	1	6S124A15	RESISTOR	39-5-1/4
R 361	1	6S124A29	RESISTOR	150-5-1/4
R 362	1	6S124A45	RESISTOR	680-5-1/4
R 363	1	6S124A57	RESISTOR	2.2K-5-1/4
R 364	1	6S124A57	RESISTOR	2.2K-5-1/4
R 365	1	6S124A57	RESISTOR	2.2K-5-1/4
R 366	1	6S124A73	RESISTOR	10K-5-1/4
R 367	1	6S124A49	RESISTOR	1K-5-1/4
R 368	1	6S124A57	RESISTOR	2.2K-5-1/4
R 369	1	6S124A73	RESISTOR	10K-5-1/4

Find No.	Qty. Req.		Nomenclature	Part Value	
R 370	1	6S124A63	RESISTOR	3.9K-5-1/4	
R 371	1	6S124A97	RESISTOR	100K-5-1/4	
U 301	1	51-06472A26	INTEGRATED CIRCUIT		
U 302	1	51-80345A23	INTEGRATED CIRCUIT		
U 303	1	51-80346A04	MIXER		
VR001	1	48-84302A09	DIODE,ZENER	6.2V-5-.4	P/O A11A1

ASSEMBLY PARTS LIST

RF Input Module
(Sheet 3)

SECTION 18

FRONT PANEL INTERFACE MODULE (A12)

18-1. General. Input buffers and output latches for front panel control and display interface to the processor are contained on the Front Panel Interface Module. Buffering and ranging circuits for the external scope vertical, SINAD, DVM, Frequency Counter, and external scope horizontal inputs is also contained on this module. A block diagram of the Front Panel Interface Module is shown in figure 18-1 with its schematic shown in figure 18-2.

18-2. Input Coupling and Ranging. Scope inputs to the Range Attenuator are from the front panel jack (EXT IN) or from the internal modulation sources (INT SCOPE TO RNG SW). An INT/EXT relay selects the input path. The external path may be AC or DC coupled and is also the path for external DVM, Frequency Counter, and SINAD inputs.

18-3. Four decades of attenuation from 1.0 to 0.001 are provided by the Range Attenuator. The input impedance of the attenuator is 1.0 megohm compensated for a bandwidth of 1 MHz. A unity gain buffer amp following the attenuator provides the drive for the DVM, Frequency Counter, and Scope Vertical Preamp circuits.

18-4. DVM Buffer. For DC measurements the DVM Buffer provides a 2-pole low pass filter with a minimum of 30 dB attenuation at 50 Hz. For AC measurements the bandwidth of the buffer is switched so that the attenuation at 10 kHz is less than 0.5 dB.

18-5. Frequency Counter Preamp. The Frequency Counter Preamp has sufficient gain for 30 mV rms sensitivity and provides hystersis for noise immunity.

18-6. Scope Vertical Preamp. A calibrated gain of 50 or a variable gain from 5 to 50 is provided by the Vertical Preamp. The gain is control led from the front panel. For vertical scope positioning the DC bias point of the preamp is controlled by the front panel position control. Deflection sensitivity at the VERT FROM RNG SW output is 0.5 volt per division.

18-7. Scope Horizontal Preamp. A fixed gain of 5 in the Horizontal Preamp gives a horizontal input sensitivity of 0.1 volt per division. Horizontal vernier gain is implemented on the front panel, and horizontal positioning on the Scope Amplifier module. Deflection sensitivity at the HORIZ TO SCOPE AMPL is 0.5 volt per division.

18-8. Control and Display Interface. Front panel control information is input to the processor in 4-bit groups through the AF control bus. Priority encoders convert the multiposition switches, scope horizontal, frequency scan, and RF step attenuator, to 4-bit codes. The processor sequentially addresses (AF ADRS BUS 0-3) each input buffer through the Address Decoder. Data in the selected buffer is then transfered to the processor on the AF DATA BUS 0-3 lines while the AF BUS EN 2 signal is low.

18-9. A three or four bit code for each LED display group is transfered from the processor to the display latch. The latched data is decoded and the indicated LED driver is enabled.

18-10. Two additional latches provide the processor control interface for the Range Attenuator, input switching, and DVM Buffer control.

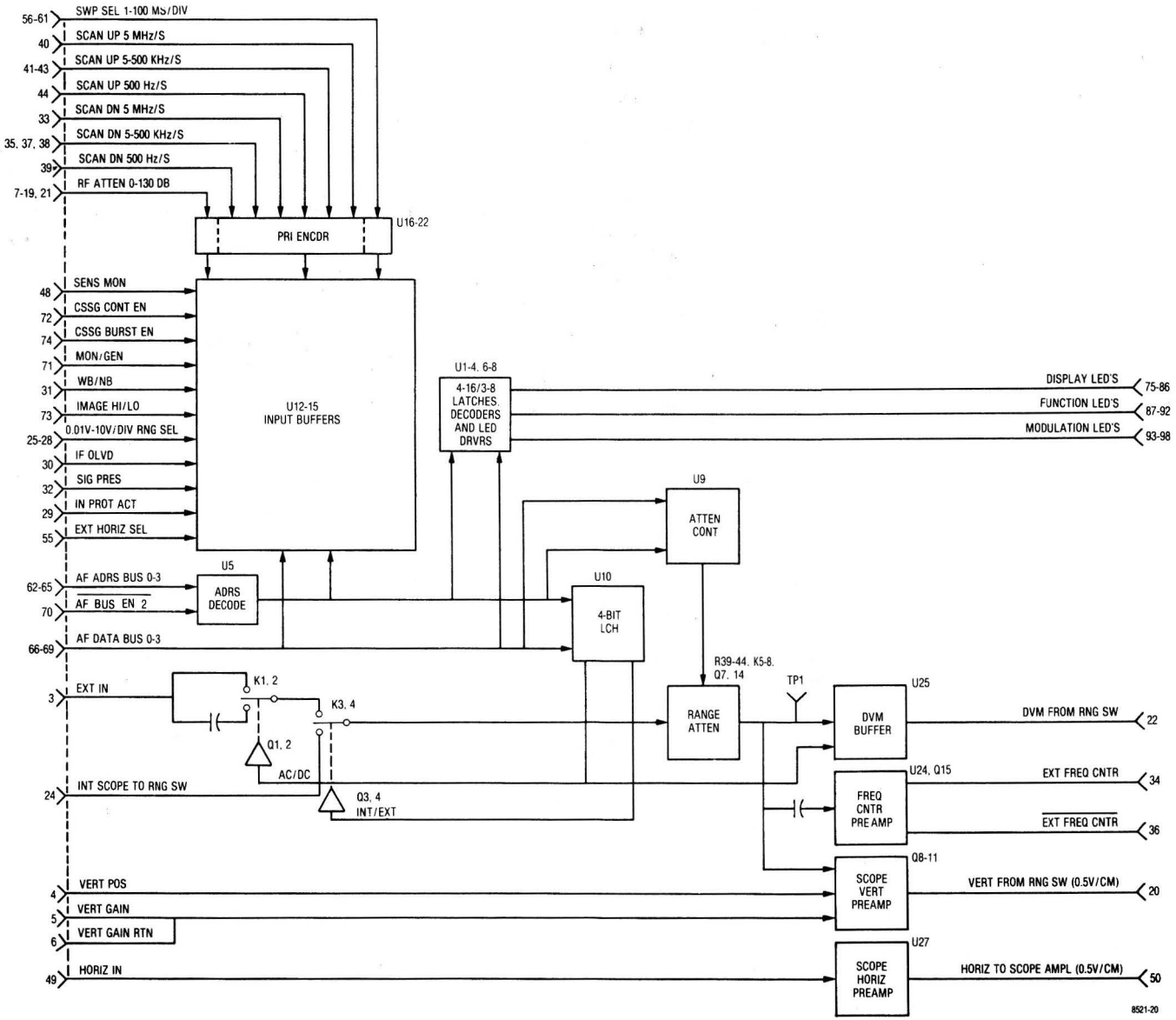

Figure 18-1. Front Panel Interface Module A12 Block Diagram

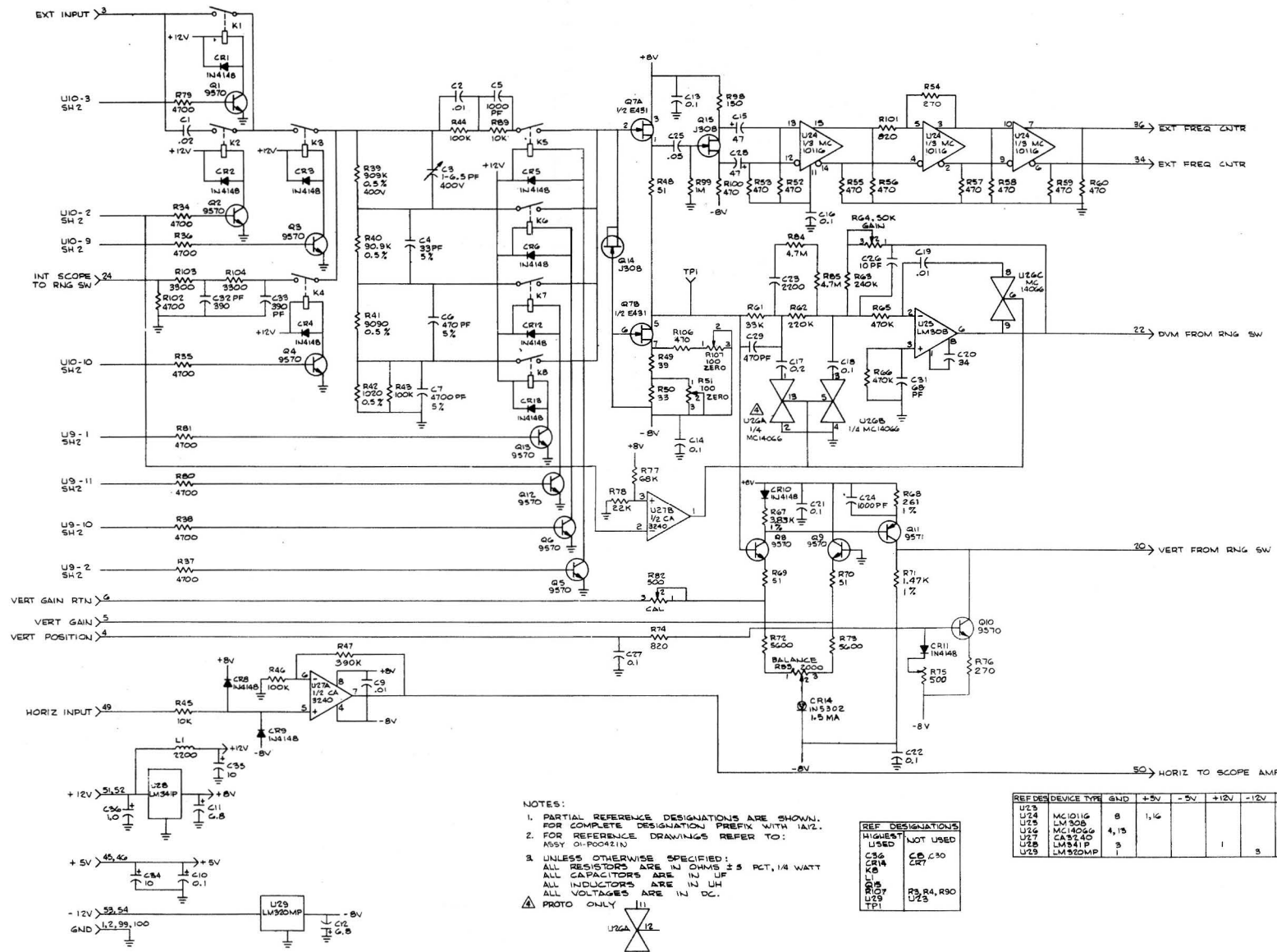

NOTES:

1. PARTIAL REFERENCE DESIGNATIONS ARE SHOWN. FOR COMPLETE DESIGNATION PREFIX WITH 1A12.
2. FOR REFERENCE DRAWINGS REFER TO: ASSY 01-P0042IN
3. UNLESS OTHERWISE SPECIFIED: ALL RESISTORS ARE IN OHMS ± 5 PCT, 1/4 WATT ALL CAPACITORS ARE IN UF ALL INDUCTORS ARE IN UH ALL VOLTAGES ARE IN DC.

4 PROTO ONLY

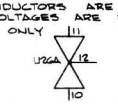

5. 9570 TRANSITOR IS MPS6520
6. 9571 TRANSITOR IS MPS6519

REF DESIGNATIONS	
HIGHEST USED	NOT USED
C36	C8, C30
CR14	CR7
K8	
L1	
R85	
R107	R3, R4, R90
U29	U23
TP1	

REF DES	DEVICE TYPE	GND	+5V	-5V	+12V	-12V	+8V	-8V	NO CONNECTION
U23									
U24	MC1011G	8	1,16						
U25	LM308						7	4	5
U26	MC14066	4,13					14	7	10,11,12
U27	CA3240						8	4	
U28	LM341P	3			1		2		
U29	LM320MP	1				3		2	

Figure 18-2. Front Panel Interface Module A12 Schematic Diagram (Sheet 1 of 2) (RTL-4045A)

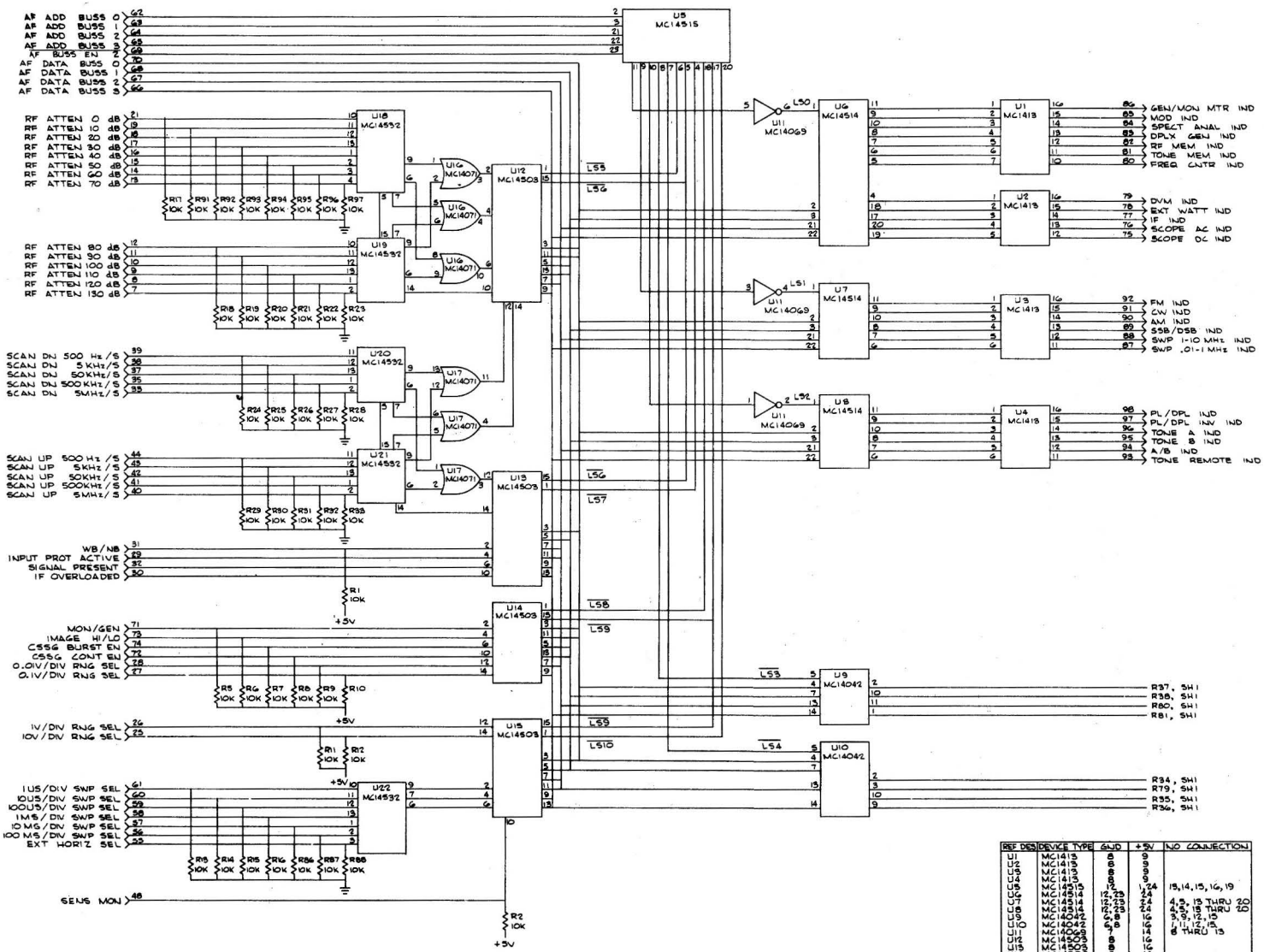

REF DES	DEVICE TYPE	GND	+5V	NO CONNECTION
U1	MC1413	8	9	
U2	MC1413	8	9	
U3	MC1413	8	9	
U4	MC1413	8	9	
U5	MC14515	12	1,24	19,14,15,16,19
U6	MC14514	12,23	24	
U7	MC14514	12,23	24	4,5, 13 THRU 20
U8	MC14514	12,23	24	4,5, 13 THRU 20
U9	MC14042	6,8	16	3,5,12,15
U10	MC14042	6,8	16	1,11,12,15
U11	MC14069	7	14	8 THRU 13
U12	MC14503	8	16	
U13	MC14503	8	16	
U14	MC14503	8	16	
U15	MC14503	8	16	
U16	MC14071	7	14	11,12,13
U17	MC14071	7	14	8,9,10
U18	MC14532	8	16	14,15
U19	MC14532	3,4,8	5,16	
U20	MC14532	3,4,8,10	5,16	14,15
U21	MC14532	3,4,8,10	5,16	
U22	MC14532	4,8	5,14,16	15

Figure 18-2. Front Panel Interface Module A12 Schematic Diagram (Sheet 2 of 2) (RTL-4045A)

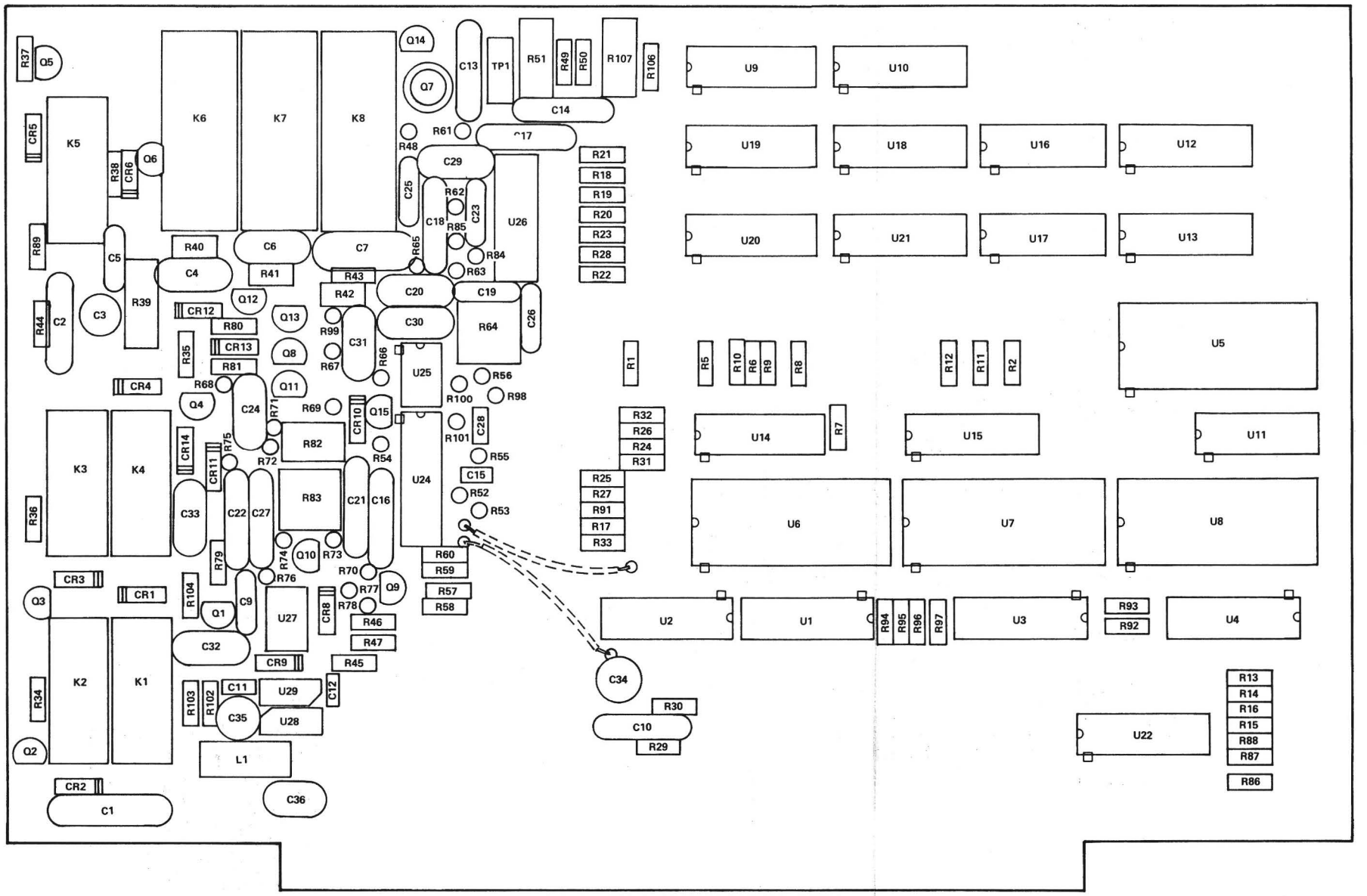

Figure 18-3. Front Panel Interface Module Parts Locator

Front Panel Interface Module A12

RTL-4045A

Find No.	Qty. Req.	Part No.	Nomenclature	Part Value
001	1	84-P00496N001	PWB, FRONT PANEL INTR	
003	AR	SN63WRMAP3	SOLDER	
004	AR	11-14167A01	INK	BLACK
005	AR		WIRE	22 WHT
006	AR	M23053/5-107-9	INSULATION SLEEVING	.375 WHT
C 001	1	21K00401029	CAPACITOR	.02UF80-20-600
C 002	1	21D82428B19	CAPACITOR	0.01UF-20-500
C 003	1	9300	CAPACITOR	1.7-6PF-250V
C 004	1	CM04ED330J03	CAPACITOR	33PF-5-500
C 005	1	21D82187B14	CAPACITOR	1000PF-10-100
C 006	1	21D84494B19	CAPACITOR	470PF-5-500
C 007	1	CM06FD472J03	CAPACITOR	4700PF-5-500
C 009	1	21D82428B62	CAPACITOR	.01UF80-20-200
C 010	1	21C82372C09	CAPACITOR	.1UF80-20-25
C 011	1	23D82397D23	CAPACITOR	6.8UF-20-20
C 012	1	23D82397D23	CAPACITOR	6.8UF-20-20
C 013	1	21C82372C09	CAPACITOR	.1UF80-20-25
C 014	1	21C82372C09	CAPACITOR	.1UF80-20-25
C 015	1	23D84762H18	CAPACITOR	47UF-20-10
C 016	1	21C82372C09	CAPACITOR	.1UF80-20-25
C 017	1	21C82372C05	CAPACITOR	.2UF80-20-25
C 018	1	21C82372C09	CAPACITOR	.1UF80-20-25
C 019	1	21D82428B62	CAPACITOR	.01UF80-20-200
C 020	1	21D84494B30	CAPACITOR	34PF-5-500
C 021	1	21C82372C09	CAPACITOR	.1UF80-20-25
C 022	1	21C82372C09	CAPACITOR	.1UF80-20-25
C 023	1	21D82428B36	CAPACITOR	2000PF-10-200
C 024	1	21D82187B14	CAPACITOR	1000PF-10-100
C 025	1	21C82372C10	CAPACITOR	.05UF-20-25
C 026	1	21D84494B29	CAPACITOR	10PF-5-500
C 027	1	21C82372C09	CAPACITOR	.1UF80-20-25
C 028	1	23D84762H18	CAPACITOR	47UF-20-10
C 029	1	21D82187B07	CAPACITOR	470PF-10-500
C 031	1	21D84494B34	CAPACITOR	68PF-5-500
C 032	1	21D82187B28	CAPACITOR	390PF-10-500
C 033	1	21D82187B28	CAPACITOR	390PF-10-500
C 034	1	23D84665F01	CAPACITOR	10UF-25
C 035	1	23D84665F01	CAPACITOR	10UF-25
C 036	1	23D83441B15	CAPACITOR	1.0UF-20-35
CR001	1	48-84463K02	DIODE	
CR002	1	48-84463K02	DIODE	
CR003	1	48-84463K02	DIODE	
CR004	1	48-84463K02	DIODE	
CR005	1	48-84463K02	DIODE	
CR006	1	48-84463K02	DIODE	
CR008	1	48-84463K02	DIODE	
CR009	1	48-84463K02	DIODE	
CR010	1	48-84463K02	DIODE	
CR011	1	48-84463K02	DIODE	
CR012	1	48-84463K02	DIODE	
CR013	1	48-84463K02	DIODE	
CR014	1	48-80346A68	DIODE	
K 003	1	80-80346A01	RELAY,REED1A-500V	1A-500V
K 004	1	80-80346A01	RELAY,REED	1A-500V
K 005	1	80-80346A01	RELAY,REED	1A-500V
K 006	1	80D84157B01	REED RELAY	1A
K 007	1	80D84157B01	REED RELAY	1A
K 008	1	80D84157B01	REED RELAY	1A
L 001	1	MS90540-08	COIL	2200UH
Q 001	1	48R00869570	TRANSISTOR	
Q 002	1	48R00869570	TRANSISTOR	
Q 003	1	48R00869570	TRANSISTOR	
Q 004	1	48R00869570	TRANSISTOR	
Q 005	1	48R00869570	TRANSISTOR	
Q 006	1	48R00869570	TRANSISTOR	
Q 007	1	48-80345A40	TRANSISTOR	
Q 008	1	48R00869570	TRANSISTOR	
Q 009	1	48R00869570	TRANSISTOR	
Q 010	1	48R00869570	TRANSISTOR	
Q 011	1	48R00869571	TRANSISTOR	
Q 012	1	48R00869570	TRANSISTOR	
Q 013	1	48R00869570	TRANSISTOR	
Q 014	1	48-80335A79	TRANSISTOR	
Q 015	1	48-80335A79	TRANSISTOR	
R 001	1	6S124A73	RESISTOR	10K-5-1/4
R 002	1	6S124A73	RESISTOR	10K-5-1/4
R 005	1	6S124A73	RESISTOR	10K-5-1/4
R 006	1	6S124A73	RESISTOR	10K-5-1/4
R 007	1	6S124A73	RESISTOR	10K-5-1/4
R 008	1	6S124A73	RESISTOR	10K-5-1/4
R 009	1	6S124A73	RESISTOR	10K-5-1/4
R 010	1	6S124A73	RESISTOR	10K-5-1/4
R 011	1	6S124A73	RESISTOR	10K-5-1/4
R 012	1	6S124A73	RESISTOR	10K-5-1/4
R 013	1	6S124A73	RESISTOR	10K-5-1/4
R 014	1	6S124A73	RESISTOR	10K-5-1/4
R 015	1	6S124A73	RESISTOR	10K-5-1/4
R 016	1	6S124A73	RESISTOR	10K-5-1/4
R 017	1	6S124A73	RESISTOR	10K-5-1/4
R 018	1	6S124A73	RESISTOR	10K-5-1/4
R 019	1	6S124A73	RESISTOR	10K-5-1/4
R 020	1	6S124A73	RESISTOR	10K-5-1/4
R 021	1	6S124A73	RESISTOR	10K-5-1/4
R 022	1	6S124A73	RESISTOR	10K-5-1/4
R 023	1	6S124A73	RESISTOR	10K-5-1/4
R 024	1	6S124A73	RESISTOR	10K-5-1/4
R 025	1	6S124A73	RESISTOR	10K-5-1/4
R 026	1	6S124A73	RESISTOR	10K-5-1/4
R 027	1	6S124A73	RESISTOR	10K-5-1/4
R 028	1	6S124A73	RESISTOR	10K-5-1/4
R 029	1	6S124A73	RESISTOR	10K-5-1/4
R 030	1	6S124A73	RESISTOR	10K-5-1/4
R 031	1	6S124A73	RESISTOR	10K-5-1/4
R 032	1	6S124A73	RESISTOR	10K-5-1/4
R 033	1	6S124A73	RESISTOR	10K-5-1/4
R 034	1	6S124A65	RESISTOR	4.7K-5-1/4
R 035	1	6S124A65	RESISTOR	4.7K-5-1/4
R 036	1	6S124A65	RESISTOR	4.7K-5-1/4
R 037	1	6S124A65	RESISTOR	4.7K-5-1/4
R 038	1	6S124A65	RESISTOR	4.7K-5-1/4
R 039	1	CMF1/4-909K-.5-T-1	RESISTOR	909K-.5-1W-500V
R 040	1	CMF1/10-90.9K-.5T1	RESISTOR	90.9K-.5-1/4
R 041	1	CMF1/10-9090-.5-T1	RESISTOR	9090-.5-1/4
R 042	1	CMF1/10-1020-.5-T1	RESISTOR	1020-.5-1/4
R 043	1	6S124A97	RESISTOR	100K-5-1/4
R 044	1	6S124A97	RESISTOR	100K-5-1/4
R 045	1	6S124A73	RESISTOR	10K-5-1/4
R 046	1	6S124A97	RESISTOR	100K-5-1/4
R 047	1	6S124B12	RESISTOR	390K-5-1/4
R 048	1	6S124A18	RESISTOR	51-5-1/4
R 049	1	6S124A15	RESISTOR	39-5-1/4
R 050	1	6S124A13	RESISTOR	33-5-1/4
R 051	1	RT22C2X101	RESISTOR,VARIABLE	100-5-3/4
R 052	1	6S124A41	RESISTOR	470-5-1/4
R 053	1	6S124A41	RESISTOR	470-5-1/4
R 054	1	6S124A35	RESISTOR	270-5-1/4
R 055	1	6S124A41	RESISTOR	470-5-1/4
R 056	1	6S124A41	RESISTOR	470-5-1/4
R 057	1	6S124A41	RESISTOR	470-5-1/4
R 058	1	6S124A41	RESISTOR	470-5-1/4
R 059	1	6S124A41	RESISTOR	470-5-1/4
R 060	1	6S124A41	RESISTOR	470-5-1/4
R 061	1	6S124A85	RESISTOR	33K-5-1/4
R 062	1	6S124B06	RESISTOR	220K-5-1/4
R 063	1	6S124B07	RESISTOR	240K-5-1/4
R 064	1	18D83452F18	RESISTOR,VARIABLE	50K
R 065	1	6S124B14	RESISTOR	470K-5-1/4
R 066	1	6S124B14	RESISTOR	470K-5-1/4
R 067	1	06-10621C51	RESISTOR	3.83K-1-1/8
R 068	1	06-10621B38	RESISTOR	261-1-1/8
R 069	1	6S124A18	RESISTOR	51-5-1/4
R 070	1	6S124A18	RESISTOR	51-5-1/4
R 071	1	06-10621C11	RESISTOR	1.47K-1-1/8
R 072	1	6S124A67	RESISTOR	5.6K-5-1/4
R 073	1	6S124A67	RESISTOR	5.6K-5-1/4
R 080	1	6S124A65	RESISTOR	4.7K-5-1/4
R 081	1	6S124A65	RESISTOR	4.7K-5-1/4
R 082	1	18D83452F07	RESISTOR,VARIABLE	500
R 083	1	18D83452F02	RESISTOR,VARIABLE	2K
R 084	1	6S124B38	RESISTOR	4.7M-5-1/4
R 085	1	6S124B38	RESISTOR	4.7M-5-1/4
R 086	1	6S124A73	RESISTOR	10K-5-1/4
R 087	1	6S124A73	RESISTOR	10K-5-1/4
R 088	1	6S124A73	RESISTOR	10K-5-1/4
R 089	1	6S124A73	RESISTOR	10K-5-1/4
R 091	1	6S124A73	RESISTOR	10K-5-1/4
R 092	1	6S124A73	RESISTOR	10K-5-1/4
R 093	1	6S124A73	RESISTOR	10K-5-1/4
R 094	1	6S124A73	RESISTOR	10K-5-1/4
R 095	1	6S124A73	RESISTOR	10K-5-1/4
R 096	1	6S124A73	RESISTOR	10K-5-1/4
R 097	1	6S124A73	RESISTOR	10K-5-1/4
R 098	1	6S124A29	RESISTOR	150-5-1/4
R 099	1	6S124B22	RESISTOR	1M-5-1/4
R 100	1	6S124A41	RESISTOR	470-5-1/4
R 101	1	6S124A47	RESISTOR	820-5-1/4
R 102	1	6S124A65	RESISTOR	4.7K-5-1/4
R 103	1	6S124A61	RESISTOR	3.3K-5-1/4
R 104	1	6S124A61	RESISTOR	3.3K-5-1/4
R 106	1	6S124A41	RESISTOR	470-5-1/4
R 107	1	RT22C2X101	RESISTOR,VARIABLE	100-5-3/4
TP001	1	3-582118-5	JACK,TIP	
U 001	1	51-80345A21	TRANSISTOR ARRAY	
U 002	1	51-80345A21	TRANSISTOR ARRAY	
U 003	1	51-80345A21	TRANSISTOR ARRAY	
U 004	1	51-80345A21	TRANSISTOR ARRAY	
U 005	1	51-80345A22	INTEGRATED CIRCUIT	
U 006	1	51-84887K72	INTEGRATED CIRCUIT	
U 007	1	51-84887K72	INTEGRATED CIRCUIT	
U 008	1	51-84887K72	INTEGRATED CIRCUIT	
U 009	1	51-84887K10	INTEGRATED CIRCUIT	
U 010	1	51-84887K10	INTEGRATED CIRCUIT	
U 011	1	51-84887K11	INTEGRATED CIRCUIT	
U 012	1	51-84887K71	INTEGRATED CIRCUIT	
U 013	1	51-84887K71	INTEGRATED CIRCUIT	
U 014	1	51-84887K71	INTEGRATED CIRCUIT	
U 015	1	51-84887K71	INTEGRATED CIRCUIT	
U 016	1	51-84887K79	INTEGRATED CIRCUIT	
U 017	1	51-84887K79	INTEGRATED CIRCUIT	
U 018	1	51-84887K63	INTEGRATED CIRCUIT	
U 019	1	51-84887K63	INTEGRATED CIRCUIT	
U 020	1	51-84887K63	INTEGRATED CIRCUIT	
U 021	1	51-84887K63	INTEGRATED CIRCUIT	
U 022	1	51-84887K63	INTEGRATED CIRCUIT	
U 024	1	51-80323A60	INTEGRATED CIRCUIT	
U 025	1	51-80345A26	INTEGRATED CIRCUIT	
U 026	1	51-84887K73	INTEGRATED CIRCUIT	
U 027	1	51-80345A04	INTEGRATED CIRCUIT	
U 028	1	51-80345A08	INTEGRATED CIRCUIT	
U 029	1	51-80345A07-8.0	INTEGRATED CIRCUIT	

ASSEMBLY PARTS LIST

Front Panel Interface Module

SECTION 19

10 MHz FREQUENCY STANDARD MODULE (A13)

19-1. General. The frequency Standard Module provides a stable 10 MHz source and the interface for an external 10 MHz input. A block diagram of the Frequency Standard Module is shown in figure 19-1 with its schematic shown in figure 19-2.

19-2. 10 MHz Oscillator and Control. The internal 10 MHz source is either a temperature compensated crystal oscillator (TCXO) or an optional ovenized crystal oscillator (OVXO). A voltage regulator on the module supplies the voltage to the oscillator and monitors the supply current. For the ovenized option, at power on the oven draws high current. As the oven warms up the current decreases, reaching some low valve when the operating temperature has been reached. A current detector illuminates the oven ready indicator when the current has decreased to the stabilized valve. The indicator is continuously illuminated with the TCXO.

19-3. Internal/External Switchover. With no signal at the external 10MHz input jack, the internal oscillator is gated to the SYNTH 10 MHz and the external 10 MHz OUT signal paths. When an external 10 MHz input is applied the switchover circuitry detects its presence, removes the power from the internal oscillator, and gates the external input to the SYNTH 10 MHz and external 10 MHz OUT signal paths. The oven ready indicator is extinguished when the system is operating from an external standard.

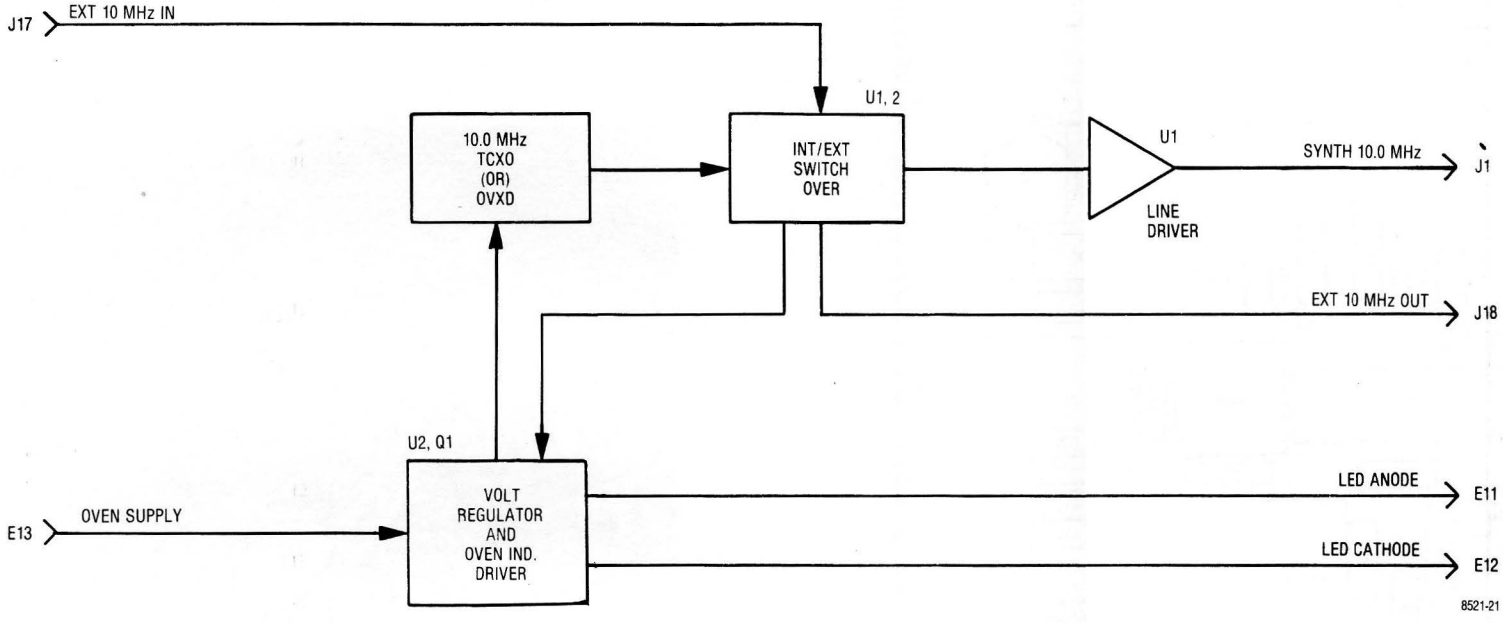

Figure 19-1. Frequency Standard Module A13
Block Diagram

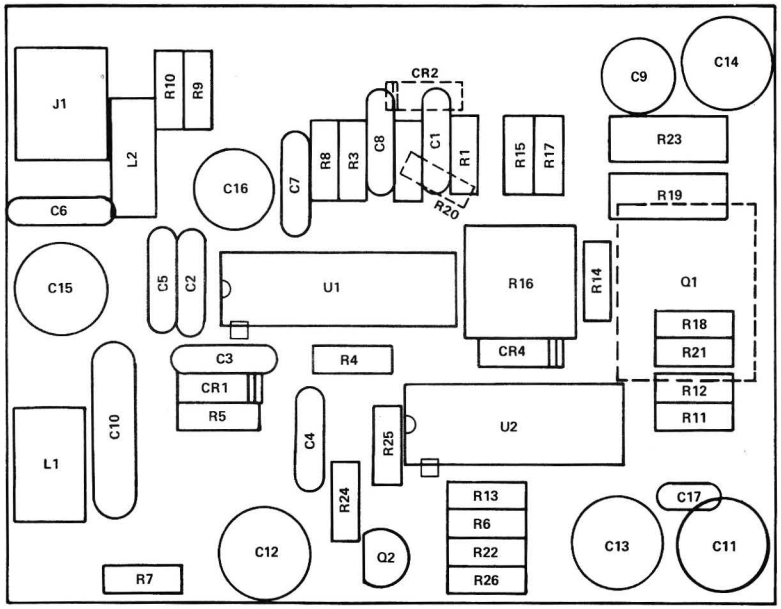

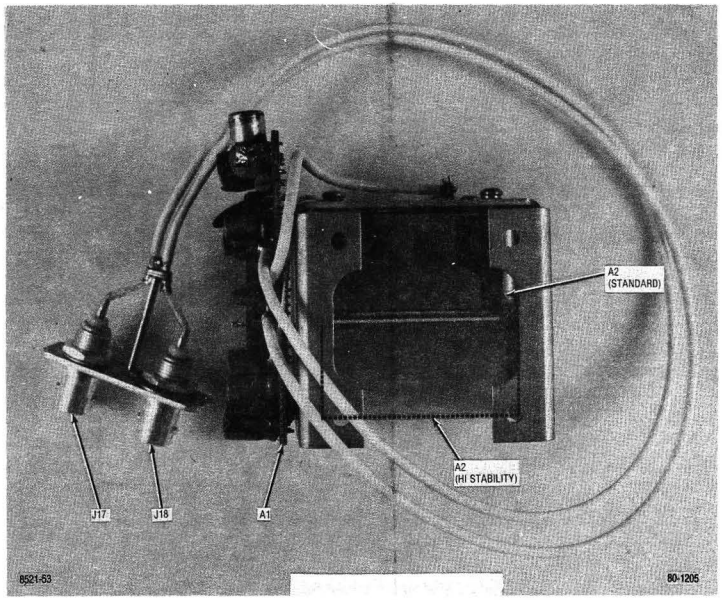

Figure 19-3. Frequency Standard Module Parts Locator

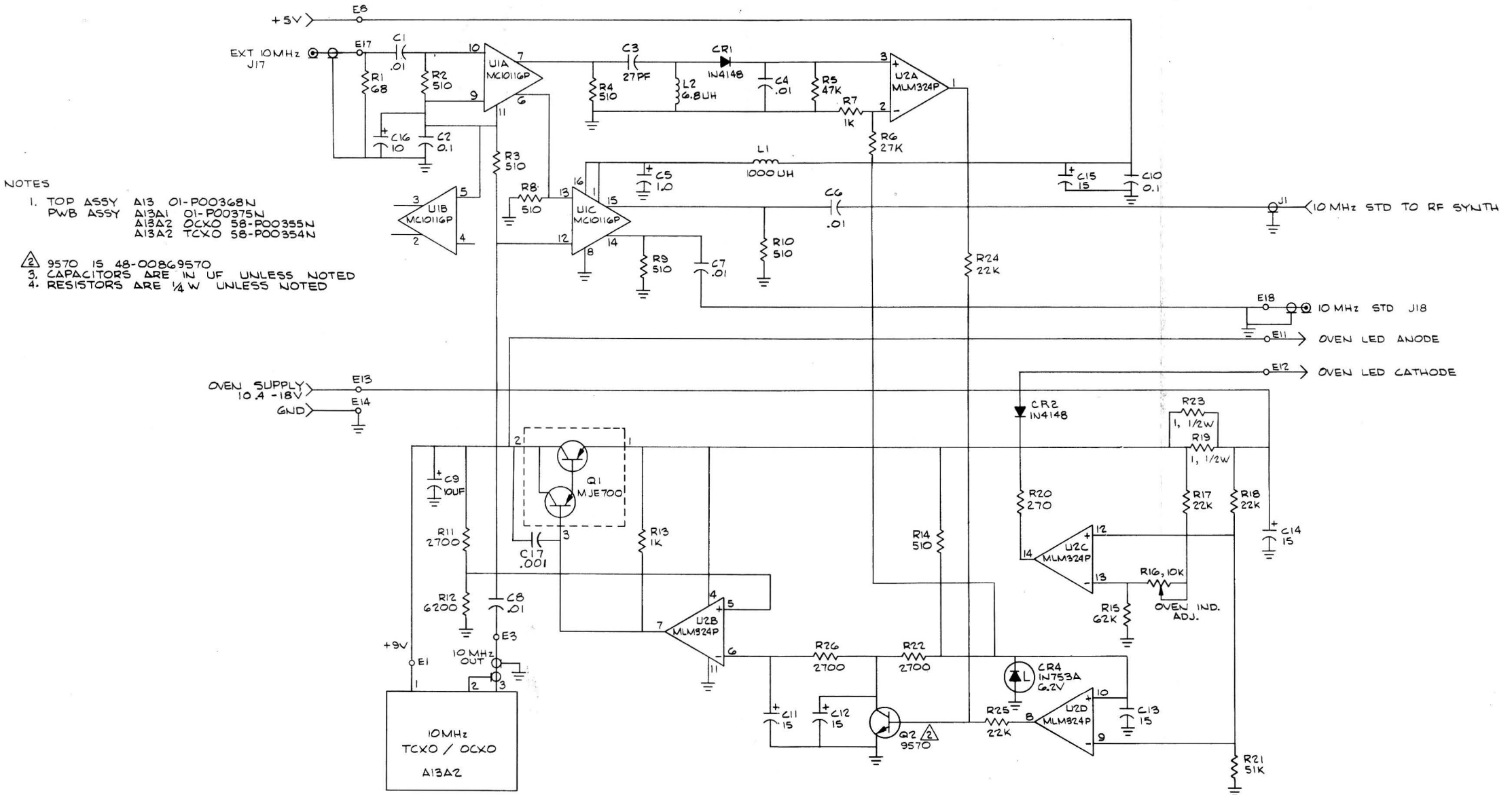

Figure 19-2. Frequency Standard Module A13 Schematic Diagram. (RTL-1004A)

Frequency Standard Module A13
RTL-1004A

Find No.	Qty. Req.	Part Number	Nomenclature	Part Value
003	1	07-P00228N001	BRACKET,OSC	
004	7	MS35206-214	SCREW,PH	4-40X.312
005	7	MS35338-40	WASHER,LOCK	NO.4
006	4	MS27183-3	WASHER,FLAT	NO.4
009	AR	30-15068A34	CABLE,RF	WHITE
010	2	1107-4-A-7	SPACER	
011	1	64-P06839R001	PLATE, CONNECTOR MTG	
012	2	29-15122A17	TERMINAL,LUG	
013	AR		WIRE	24 WHT
014	AR	SN63WRMAP3	SOLDER	
015	AR	11-14167A01	INK	BLACK
016	1	14-15140A08	INSULATOR,MICA	
017	AR		WIRE	22 WHT
018	3	NAS620C4L	WASHER	NO.4
A 001	1	RTL-4046A	10MHZ STANDARD INTERF	
A 002	1	01-80307A98	REF OSC, 10 MHz, TXCO	
J 017	1	M39012/21-0002	CONNECTOR,RF	
J 018	1	M39012/21-0002	CONNECTOR,RF	
*A002	1	RTL-1006A	OSC, H1 STABILITY	

*THIS OSCILLATOR USED WITH HIGH STABILITY OPTION A13 MODULE RTL-1007A

10MHZ STANDARD INTERFACE PWB
RTL-4046A

Find No.	Qty. Req.	Part Number	Nomenclature	Part Value
	1	84-P00376N001	PWB, 10 MHZ INTERFACE	
	AR	SN63WRMAP3	SOLDER	
	AR	11-14167A01	INK	BLACK
	AR	SN96WRMAP3	SOLDER	
	AR		WIRE	16
C 001	1	21D82428B62	CAPACITOR	.01UF80-20-200
C 002	1	21C82372C09	CAPACITOR	.1UF80-20-25
C 003	1	21D84494B42	CAPACITOR	27PF-5-500
C 004	1	21D82428B62	CAPACITOR	.01UF80-20-200
C 005	1	23D83441B15	CAPACITOR	1.0UF-20-35
C 006	1	21D82428B62	CAPACITOR	.01UF80-20-200
C 007	1	21D82428B62	CAPACITOR	.01UF80-20-200
C 008	1	21D82428B62	CAPACITOR	.01UF80-20-200
C 009	1	23D84665F01	CAPACITOR	10UF-25V
C 010	1	21C82372C09	CAPACITOR	.1UF80-20-25
C 011	1	23D84665F02	CAPACITOR	15UF-25V
C 012	1	23D84665F02	CAPACITOR	15UF-25V
C 013	1	23D84665F02	CAPACITOR	15UF-25V
C 014	1	23D84665F02	CAPACITOR	15UF-25V
C 015	1	23D84665F02	CAPACITOR	15UF-25V
C 016	1	23D84665F01	CAPACITOR	10UF-25V
C 017	1	21D82187B14	CAPACITOR	1000PF-10-100
CR001	1	48-84463K02	DIODEF-10-100	
CR002	1	48-84463K02	DIODEF-10-100	
CR004	1	48-84302A09	DIODE,ZENER00	6.2V-5-.4
J 001	1	9-84231B02	CONNECTOR,PHONE JACK	
L 001	1	MS90539-15	COIL	1000UH
L 002	1	MS14046-2	CHOKE, RF	6.8UH

Find No.	Qty. Req.	Part Number	Nomenclature	Part Value
Q 001	1	48-80321A06	TRANSISTOR	
Q 002	1	48R00869570	TRANSISTOR	
R 001	1	6S124A21	RESISTOR	68-5-1/4
R 002	1	6S124A42	RESISTOR	510-5-1/4
R 003	1	6S124A42	RESISTOR	510-5-1/4
R 004	1	6S124A42	RESISTOR	510-5-1/4
R 005	1	6S124A89	RESISTOR	47K-5-1/4
R 006	1	6S124A83	RESISTOR	27K-5-1/4
R 007	1	6S124A49	RESISTOR	1K-5-1/4
R 008	1	6S124A42	RESISTOR	510-5-1/4
R 009	1	6S124A42	RESISTOR	510-5-1/4
R 010	1	6S124A42	RESISTOR	510-5-1/4
R 011	1	6S124A59	RESISTOR	2.7K-5-1/4
R 012	1	6S124A68	RESISTOR	6.2K-5-1/4
R 013	1	6S124A49	RESISTOR	1K-5-1/4
R 014	1	6S124A42	RESISTOR	510-5-1/4
R 015	1	6S124A92	RESISTOR	62K-5-1/4
R 016	1	18D83452F14	RESISTOR,VARIABLE	10K
R 017	1	6S124A81	RESISTOR	22K-5-1/4
R 018	1	6S124A81	RESISTOR	22K-5-1/4
R 019	1	6S125B70	RESISTOR	1-5-1/2
R 020	1	6S124A35	RESISTOR	270-5-1/4
R 021	1	6S124A90	RESISTOR	51K-5-1/4
R 022	1	6S124A59	RESISTOR	2.7K-5-1/4
R 023	1	6S125B70	RESISTOR	1-5-1/2
R 024	1	6S124A81	RESISTOR	22K-5-1/4
R 025	1	6S124A81	RESISTOR	22K-5-1/4
R 026	1	6S124A59	RESISTOR	2.7K-5-1/4
U 001	1	51-80323A60	INTEGRATED CIRCUIT	
U 002	1	51R84320A80	INTEGRATED CIRCUIT	

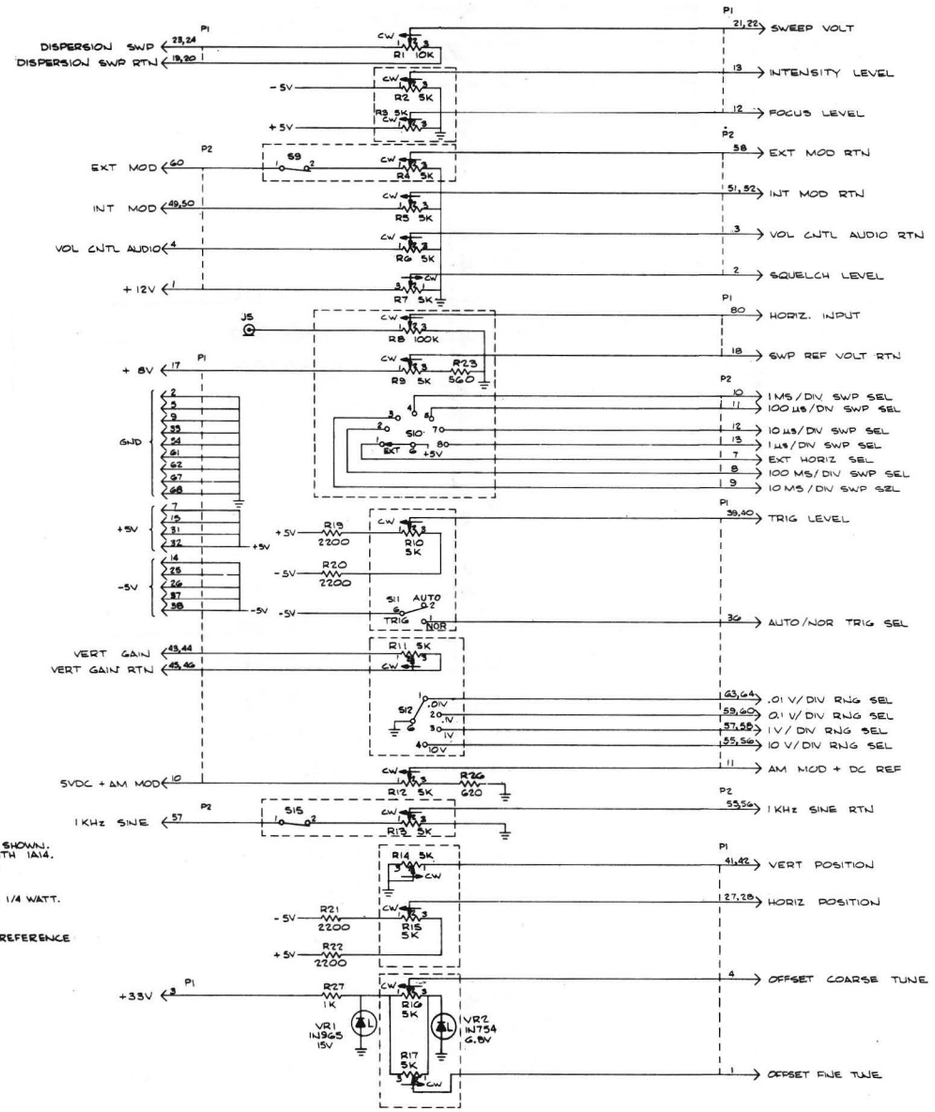

NOTES:

1. PARTIAL REFERENCE DESIGNATIONS ARE SHOWN. FOR COMPLETE DESIGNATION PREFIX WITH 1A14.
2. FOR REFERENCE DRAWINGS REFER TO: ASSY DRAWING 01-P00366N
3. UNLESS OTHERWISE SPECIFIED: ALL RESISTORS ARE IN OHMS ± 5 PCT, 1/4 WATT. ALL CAPACITORS ARE IN UF. ALL VOLTAGES ARE IN DC.

4 APPLIES TO IEEE OPTION ONLY. FOR REFERENCE DRAWING SEE 01-P00366N002.

Figure 20-1. Front Panel A14
Schematic Diagram (Sheet 1 of 3)
(01-80304A42)

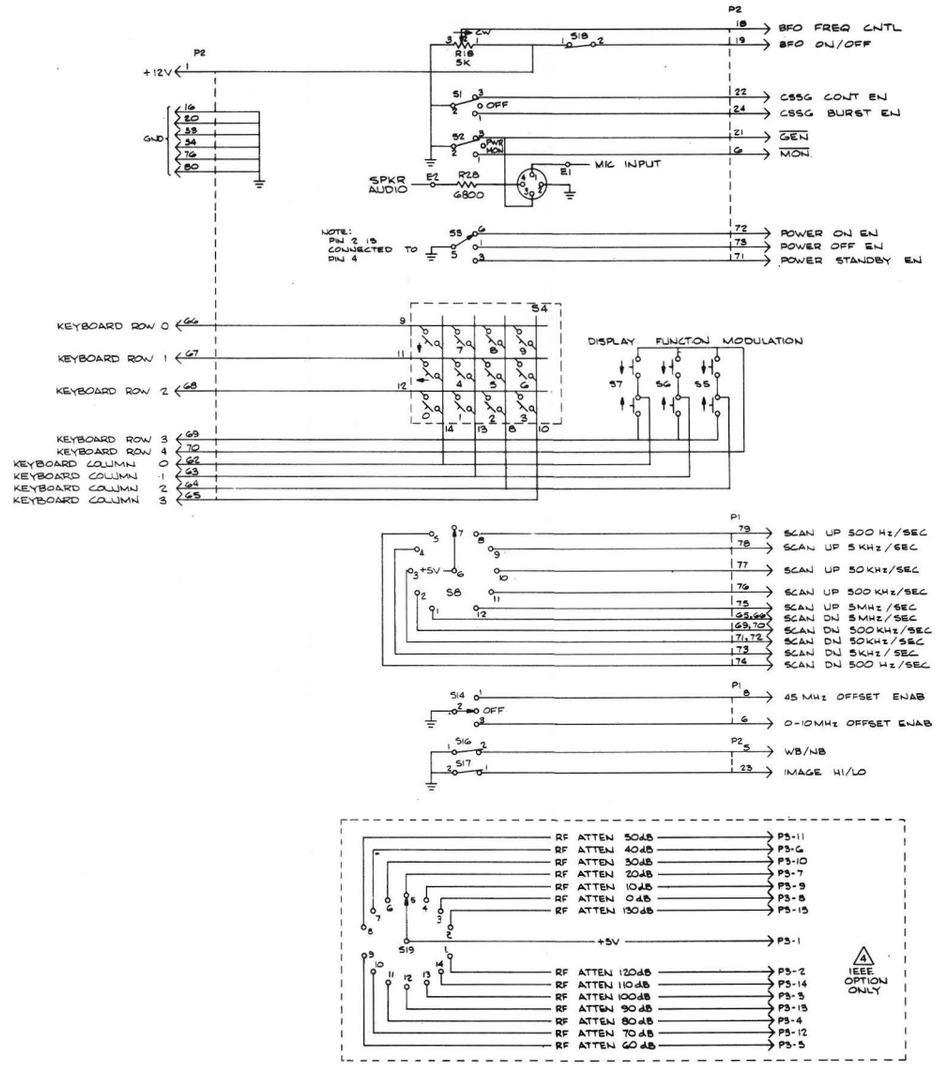

Figure 20-1. Front Panel A14
Schematic Diagram (Sheet 2 of 3)
(01-80304A42)

NOTES:
1. PARTIAL REFERENCE DESIGNATIONS ARE SHOWN. FOR COMPLETE DESIGNATION PREFIX WITH 1A14A1
2. FOR REFERENCE DRAWINGS REFER TO: ASSEMBLY 01-P00206N
3. UNLESS OTHERWISE SPECIFIED: ALL RESISTORS ARE IN UF. ALL VOLTAGES ARE IN DC.

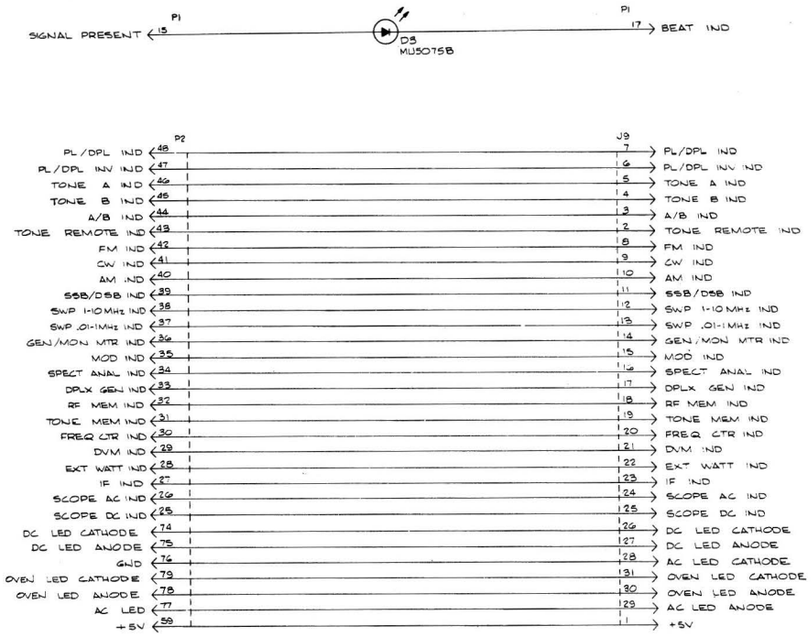

Figure 20-1. Front Panel A14
Schematic Diagram (Sheet 3 of 3)
(01-80304A42)

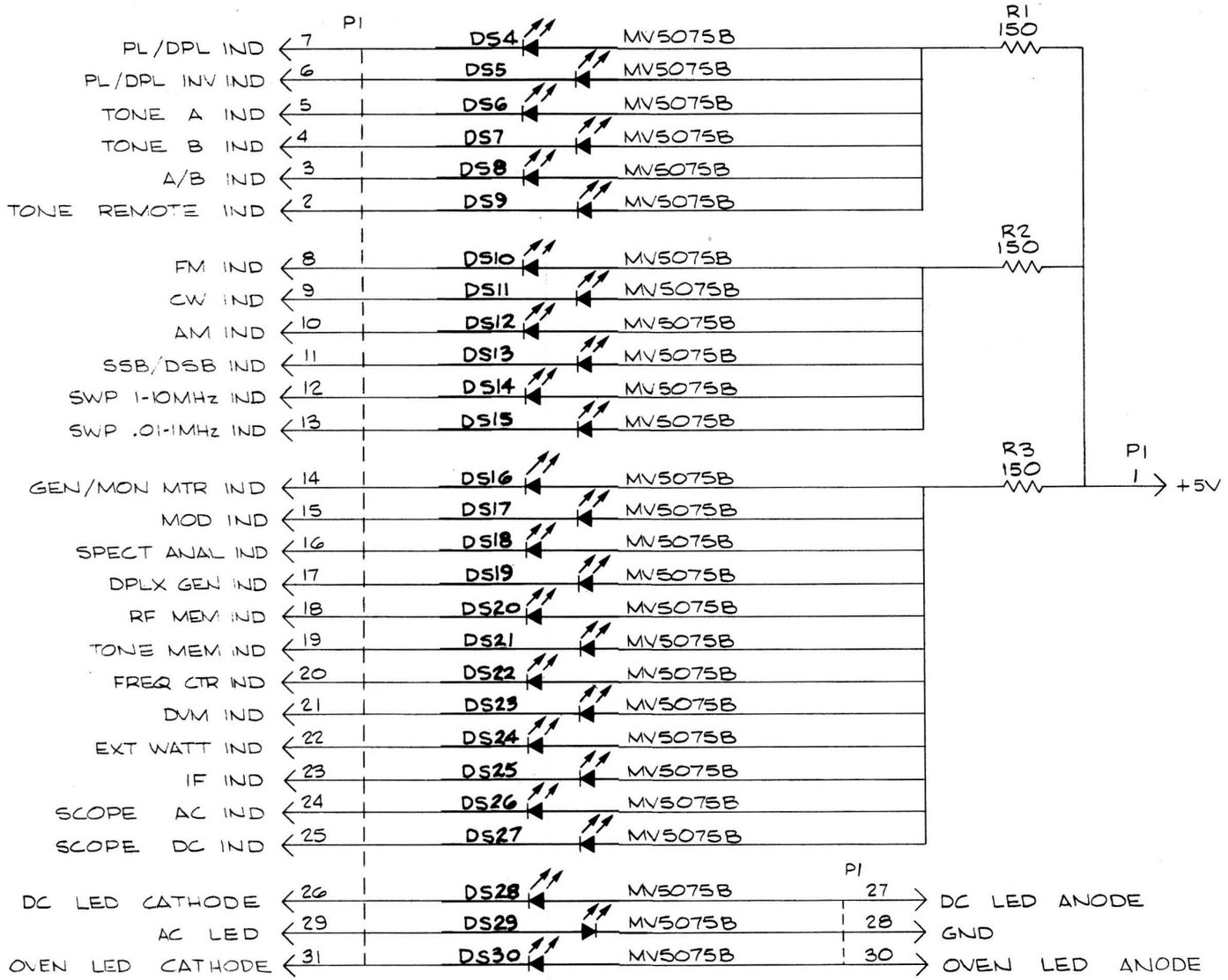

Figure 20-2. Display Board A14A1
Schematic Diagram
(01-80304A43)

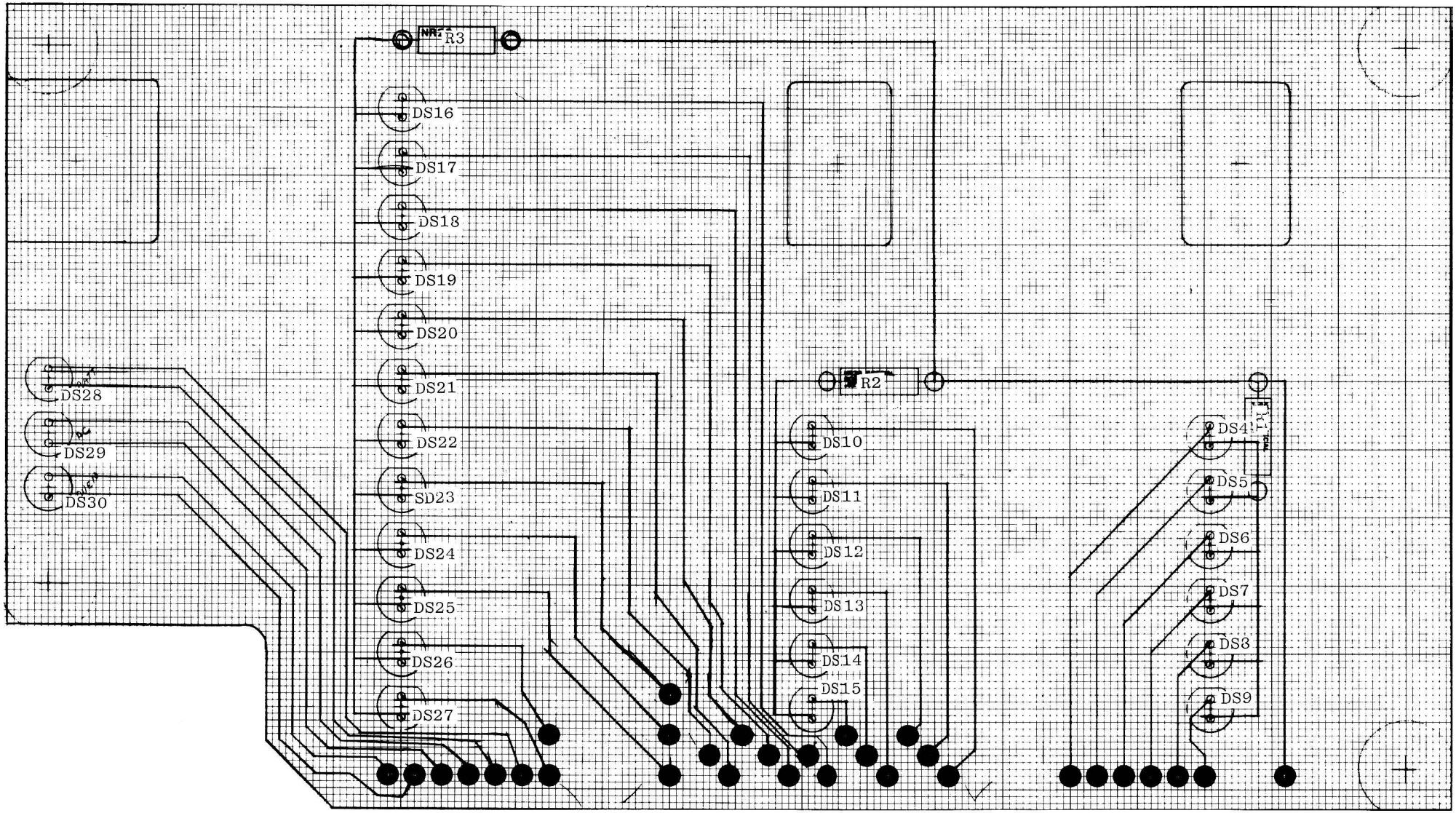

Figure 20-2. Display Board A14A1
Schematic Diagram
(01-80304A43)

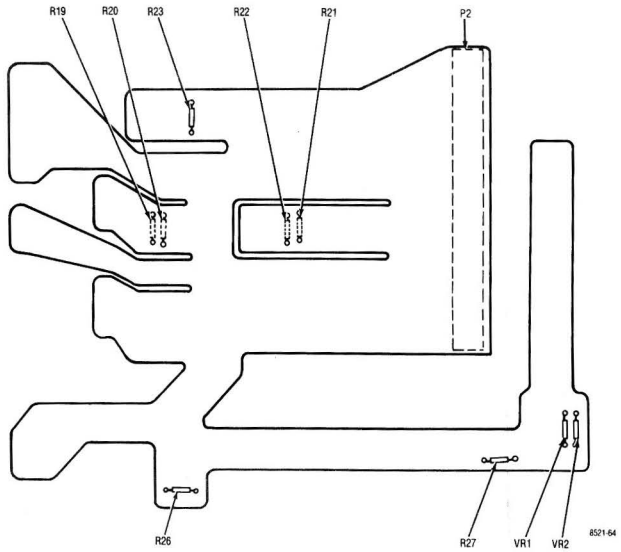

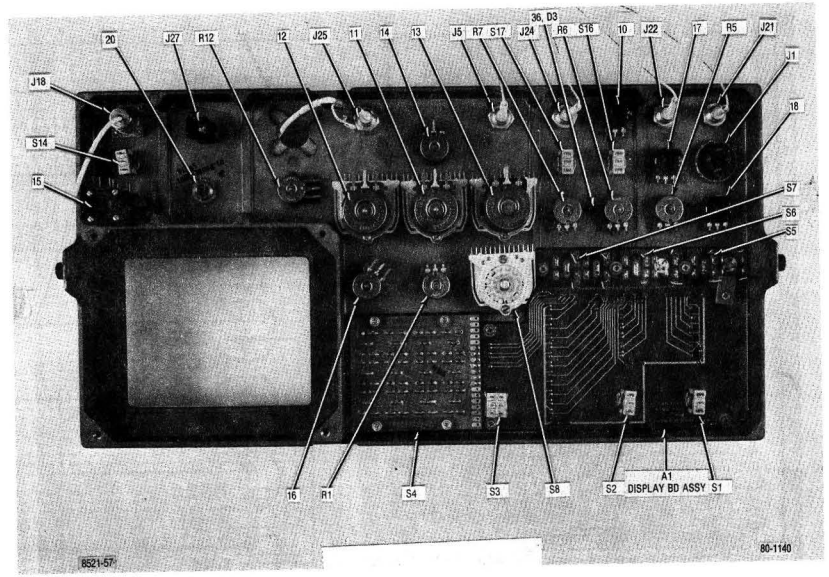

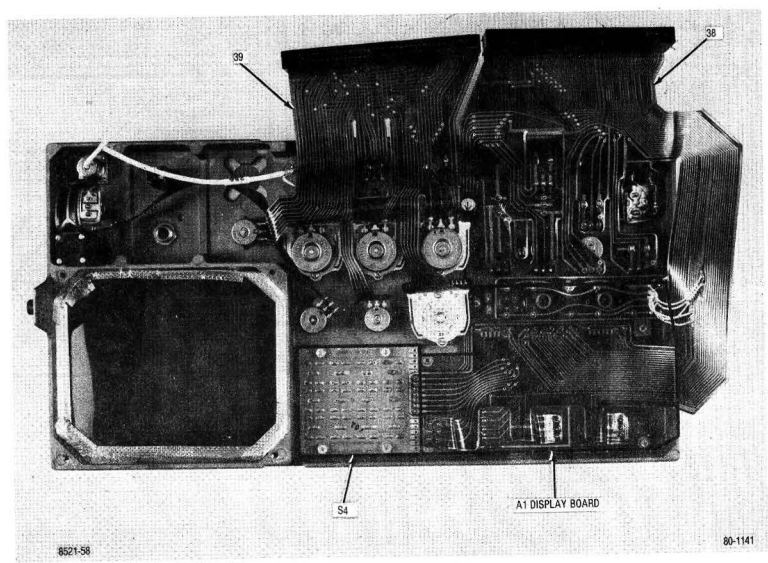

Figure 20-2. Front Panel Parts Location

Front Panel Assembly A14
01-80304A42

Find No.	Qty. Req.	Part Number	Nomenclature	Part Value
01	1	64-80335A02	PANEL,FRONT	
03	7	45T-3	NUT,COMPONENT	3/8-32
04	8	65T-2	NUT,COMPONENT	1/4-32
005	7	1920-2A	WASHER,LOCK	3/8
006	8	1914-5A	WASHER,LOCK	1/4
07	7	3S135676	SCREW,PHILLIPS HEX	4-40X.250
08	4	03-80342A60	SCREW,FL HD 82 DEGREE	3-56X1/4
009	4	3-134212	SCREW,THD FORMING	4-40X.312
010	1	18-80346A17	RESISTOR,VARIABLE/SWI	BFO
11	1	40-80335A78	SWITCH,RESISTOR VARIA	SCOPE TRIG
12	1	40-80335A79	SWITCH,RESISTOR VARIA	SCOPE VERT.
013	1	40-80335A76	SWITCH/DUAL RESISTOR,	SCOPE HORIZ
014	1	18-80346A13	RESISTOR,VAR,DUAL,SCO	
15	1	18-80346A19	RESISTOR,VAR,DUAL,OFF	
16	1	18-80346A13	RESISTOR,VAR,DUAL,FOC	
017	1	18-80346A18	RESISTOR,VARIABLE/SWI	1KHZ LEVEL
018	1	18-80346A18	RESISTOR,VARIABLE/SWI	EXT LEVEL
19	1	13-80335A04	FR PANEL OVERLAY	
22	1	35500-71	PUSHBUTTON,SWITCH-0	
023	1	35500-72	PUSHBUTTON, SWITCH-1	
024	1	35500-73	PUSHBUTTON, SWITCH-2	
025	1	35500-74	PUSHBUTTON, SWITCH-3	
026	1	35500-75	PUSHBUTTON, SWITCH-4	
027	1	35500-76	PUSHBUTTON, SWITCH-5	
028	1	35500-77	PUSHBUTTON, SWITCH-6	
029	1	35500-78	PUSHBUTTON, SWITCH-7	
030	1	35500-79	PUSHBUTTON, SWITCH-8	
031	1	35500-80	PUSHBUTTON, SWITCH-9	
032	8	35500-43	PUSHBUTTON,SWITCH,DEL	
034	1	64-P00339N001	PLATE,SWITCH CLAMP	
035	2	MP-0100-40-DW-4H	CONNECTOR	80 PIN W/O EARS
036	1	004-9011	HOLDER,LED	
037	1	30-P00213N001	CABLE ASSEMBLY,OFFSET	FRONT PANEL/A11
038	1	84-P00440N001	PWB,FLEX LEFTSIDE,DIS	
039	1	84-P00439N001	PWB,FLEX RIGHTSIDE,SC	
040	3	04-14154B12	INSULATOR	NO.4
041	1	2-482070	NUT,COMP	
042	1	4-7699	WASHER,COMP	
043	8	36-80335A79	KNOBER,COMP	1/8 SHAFT
044	1	36-80335A85	KNOBSHAFT	1/4 SHAFT
045	3	36-80335A87	KNOB,DUAL 1/8-1/4 SHA	
047	AR	SN63WRMAP3	SOLDER	
048	AR	11-14167A01	INK	BLACK
049	AR		WIRE	22 WHT
050	AR	30-15068A34	CABLE,RF	WHITE
051	1	NAS1745-3	FERRULE,SOLDER	
052	AR	M23053/5-105-9	INSULATING SLEEVING	.187 WHT
053	AR	M23053/5-103-9	INSULATION SLEEVING	.093 WHT
054	AR		ENCAPSULANT SILICONE	
055	1	75-80335A50	ISOLATOR,CRT FRONTNE	
056	1	13-P06819R001	BEZEL	
057	1	36-80335A86	KNOB,DUAL 1/8-1/4 SHA	
058	AR		WIRE	24 WHT
059	AR	SN63WRP3	SOLDER	
060	1	29-15122A17	TERMINAL,LUG	
064	4	5610-21-31	WASHER	N0.4
068	AR	1245X.5W	TAPE,SHIELDING	
069	1	61-P04142T001	WINDOW,EMI	
070	AR	20-42127	MESH GASKETING	
074	2	36-80346A23	KNOB GASKETING	DUAL 1/8-1/4 SHAFT
075	AR		TAPE	NATURAL
076	1	61-P01314V001	WINDOW,CRT	
077	AR	RTV3145	ADHESIVE	
078	1	61-80335A53	CRT GRATICLE	
A 001	1	01-80304A43	DISPLAY BOARD ASSY	
D 003	1	48D84404E03	LED	
J 001	1	9-830418	CONNECTOR,MIC	
J 005	1	M39012/21-0002	CONNECTOR,RF	
J 021	1	M39012/21-0002	CONNECTOR,RF	
J 022	1	M39012/21-0002	CONNECTOR,RF	
J 024	1	M39012/21-0002	CONNECTOR,RF	
J 025	1	M39012/21-0002	CONNECTOR,RF	
J 027	1	UJ2B	CONNECTOR,PHONE JACK	
P 001	1	01-80304A54	CABLE ASSEMBLYE JACK	16PIN-101N-END
R 001	1	18-80346A15	RESISTOR,VAR,DISPR/SW	10K-10-1/4
R 002	1	06-	RESISTOR	PART OF F/N 16
R 003	1	06-	RESISTOR	PART OF F/N 16
R 004	1	06-	RESISTOR	PART OF F/N 18
R 005	1	18-80346A16	RESISTOR,VAR,INT,MOD,	5K
R 006	1	18-80346A14	RESISTOR,VAR,AUDIO LE	5K
R 007	1	18-80346A14	RESISTOR,VAR,SQUELCH	5K
R 008	1	06-	RESISTOR	PART OF F/N 13
R 009	1	06-	RESISTOR	PART OF F/N 13
R 010	1	06-	RESISTOR	PART OF F/N 11
R 011	1	06-	RESISTOR	PART OF F/N 12
R 012	1	18-80346A14	RESISTOR,VAR,RF LEVEL	5K
R 013	1	06-	RESISTOR	PART OF F/N 17
R 014	1	06-	RESISTOR	PART OF F/N 14
R 015	1	06-	RESISTOR	PART OF F/N 14
R 016	1	06-	RESISTOR	PART OF F/N 15
R 017	1	06-	RESISTOR	PART OF F/N 15
R 018	1	06-	RESISTOR	PART OF F/N 10
R 019	1	6S124A57	RESISTOR	2.2K-5-1/4
R 020	1	6S124A57	RESISTOR	2.2K-5-1/4
R 021	1	6S124A57	RESISTOR	2.2K-5-1/4
R 022	1	6S124A57	RESISTOR	2.2K-5-1/4
R 023	1	6S124A43	RESISTOR	560-5-1/4
R 026	1	6S124A44	RESISTOR	620-5-1/4
R 027	1	6S124A49	RESISTOR	1K-5-1/4
R 028	1	6S125A69	RESISTOR	6.8K-5-1/2
S 001	1	40-80335A82	SWITCH,TOGGLE	SP3T,CSSG
S 002	1	40-80335A81	SWITCH,TOGGLE	SP3T,MON GEN
S 003	1	40-80335A83	SWITCH,TOGGLE	DP3T,PWR
S 004	1	40-80335A64	SWITCH, PUSHBUTTON	12 POSITION
S 005	1	40-80335A65	SWITCH, PUSHBUTTON	2 POSITION
S 006	1	40-80335A66	SWITCH, PUSHBUTTON	2 POSITION
S 007	1	40-80335A66	SWITCH, PUSHBUTTON	2 POSITION
S 008	1	40-80335A75	SWITCH,ROTARY	1 POL,11 POS,RF SCAN
S 009	1	40-	SWITCH	PART OF F/N 18
S 010	1	40-	SWITCH	PART OF F/N 13
S 011	1	40-	SWITCH	PART OF F/N 11
S 012	1	40-	SWITCH	PART OF F/N 12
S 014	1	40-80335A81	SWITCH,TOGGLE2	SP3T,OFFSET
S 015	1	40-	SWITCH	PART OF F/N 17
S 016	1	40-80335A80	SWITCH,TOGGLE7	SP5T,WB/NB
S 017	1	40-80335A80	SWITCH,TOGGLE	SP5T,IMAGE
S 018	1	40-	SWITCH	PART OF F/N 10
S 019	1	40-P04127T001	WAFER SWITCH, 14 POS	
VR001	1	48-80345A96	DIODE SWITCH, 14 POS	15V-20-.4
VR002	1	48-80345A92	DIODE0-.4	6.8V-10-.4

A130-4

Display Board A14A1
01-80304A43

Find No.	Qty. Req.	Part Number	Nomenclature	Part Value
001	1	84-P00207N001	PWB, DISPLAY	
002	AR	MULTICORE-TLCWRAP3SOLDER		LOW TEMP.293 F
003	AR	11-14167A01	INK	BLACK
004	31	75491-004	CONTACT	BERG,TRI PIN
005	AR	AG1.5WS	SOLDER	
005	AR	AG1.5WS	SOLDER	
DS004	1	48D84404E03	LED	
DS005	1	48D84404E03	LED	
DS006	1	48D84404E03	LED	
DS007	1	48D84404E03	LED	
DS008	1	48D84404E03	LED	
DS009	1	48D84404E03	LED	
DS010	1	48D84404E03	LED	
DS011	1	48D84404E03	LED	
DS012	1	48D84404E03	LED	
DS013	1	48D84404E03	LED	
DS014	1	48D84404E03	LED	
DS015	1	48D84404E03	LED	
DS016	1	48D84404E03	LED	
DS017	1	48D84404E03	LED	
DS018	1	48D84404E03	LED	
DS019	1	48D84404E03	LED	
DS020	1	48D84404E03	LED	
DS021	1	48D84404E03	LED	
DS022	1	48D84404E03	LED	
DS023	1	48D84404E03	LED	
DS024	1	48D84404E03	LED	
DS025	1	48D84404E03	LED	
DS026	1	48D84404E03	LED	
DS027	1	48D84404E03	LED	
DS028	1	48D84404E03	LED	
DS029	1	48D84404E03	LED	
DS030	1	48D84404E03	LED	
R 001	1	6S124A29	RESISTOR	150-5-1/4
R 002	1	6S124A29	RESISTOR	150-5-1/4
R 003	1	6S124A29	RESISTOR	150-5-1/4

ASSEMBLY PARTS LIST
Front Panel

SECTION 21

BLOWER ASSEMBLY (A15)

21-1. For continuous high ambient temperature operation or with the IEEE control option, the blower option provides additional cooling for the system. The blower as received from the factory will run whenever the unit is connected to the AC line. However, a jumper shorting out a thermostat in the blower assembly may be removed so that the fan only operates when high temperature conditions exist. A schematic of the Blower Assembly is shown in figure 21-1.

Find No.	Qty. Req.	Part Number	Nomenclature	Part Value
001	1	MU2A1	FAN	
002	1	15-P00257N001	CASE, HOUSING	
003	1	3450-87-239	THERMOSTAT	
004	1	477712	FILTER ASSY	
005	1	32-P06859R001	GASKET, BLOWER	
010	1	206429-1	CONNECTOR	

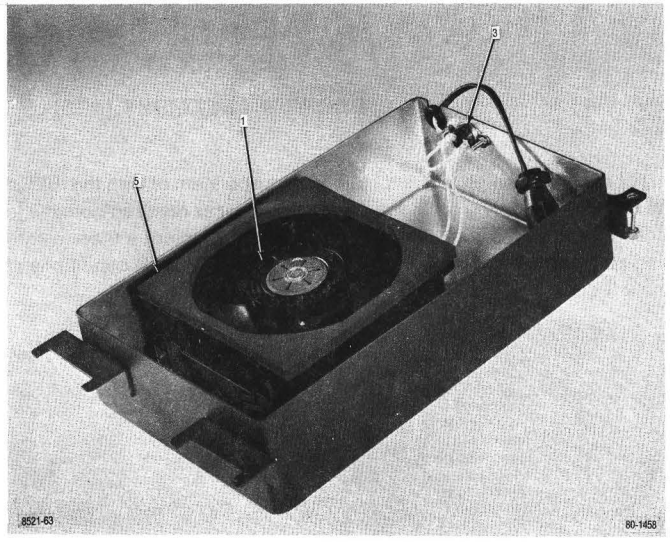

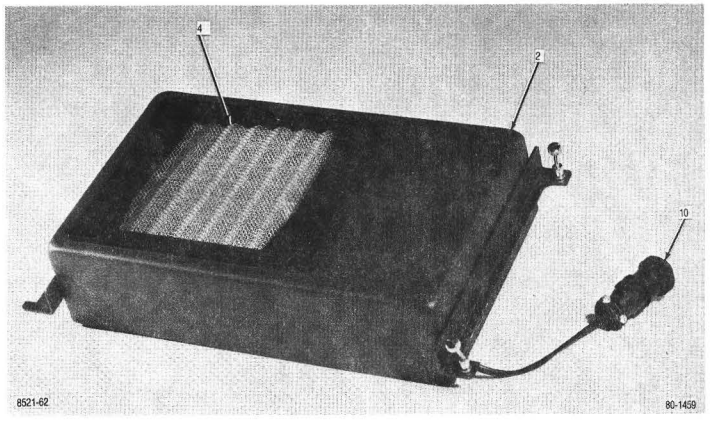

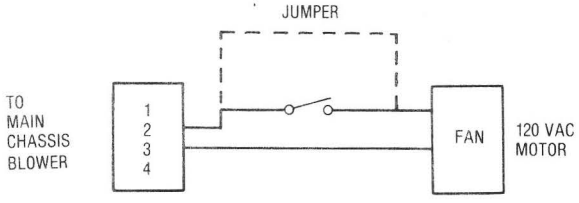

Figure 21-2. Blower Assembly Parts Location

SECTION 22

IEEE — 488 BUS CONTROL

22-1. INTRODUCTION

22.2. The IEEE Interface Option enables the use of the Communications System Analyzer as a programmable measurement instrument. When combined with a suitable programmable controller and applications software, the major functions of the analyzer can be controlled or monitored via an IEEE-488 standard digital interface. Thus, repetitive test routines can be performed and the data recorded quickly and accurately with little operator interaction.

22-3. The interface characteristics conform to the specifications of the IEEE Standard Digital Interface for Programmable Instrumentation (IEEE Standard 488) which defines both the electrical and the mechanical interface. Control protocol is also defined by the specification. Control commands which are unique to the analyzer are described in detail in the following paragraphs of this section.

22-4. The controller for this application should be capable of reading and writing ASCII and control characters from and to the bus in accordance with the 488 specification. Application software is the user's responsibility as dictated by the controller selected, although interface and application assistance is available from Motorola.

22-5. The IEEE option package consists of an IEEE Interface module (A8) with a rear panel connector, an electrically programmable RF attenuator in place of the step attenuator on the RF Input Module (AH), a fourteen position rotary switch on the front panel in place of the step attenuator shaft, and one additional ROM memory 1C on the Processor module (A9).

22-6. While in the local mode the IEEE-488 equiped system operates and performs the same as a standard system, except the maximum RF output level is reduced to +11 dBm from +13 dBm. However, when the Remote Enable (PEN) line on the IEEE Bus is activated many of the front panel controls are disabled and their functions placed under bus control. Refer to table 22-1 for a listing of those functions which can be controlled or monitored via the 488 Bus.

Table 22-1. IEEE-488 Interface Controllable Functions

Control/Measurement	Comment
Function Switch	Generate/Power Monitor/ Monitor
Modulation Control	Continuous/OFF/BURST
Wideband/Narrowband Switch	
Image High/Low Switch	
Duplex Oscillator Switch	0-10 MHz/OFF/45 MHz
Keyboard	Numeric Entries 0-9. Can be transmitted to the bus.
Display Mode	Generate/Monitor Metering (Note: 1) Modulation Spectrum Analyzer Duplex Generator RF Memory Tone Memory Frequency Counter DVM External Wattmeter IF Scope AC Scope DC Remote Terminal Mode Unit can also display a subset of ASCII characters (numerals 0-9, upper case alpha letters A-Z, plus other symbols—ASCII characters 20 thru 5F Hexadecimal) enables display of operator messages on CRT display in a transparent terminal mode.
Function Mode	FM (Note: 1) CW AM SSB/DSB SWP 1-10 MHz SWP 0.01-1 MHz
Code Synthesizer Mode	PL/DPL PL/DPL Invert Tone A Tone B A/B Tone Remote

Control/Measurement	Comment
RF Frequency	Frequency entry to be supplied by program. Frequencies not available from memory table.
PL Frequency	
DPL Code	
Tone A Frequency	
Tone B Frequency	
Time Sequence Select	Sequences 1 through 5 only (Note: 2)
Wattmeter Element Select	
External Modulation	Modulation settable to any measurable level
Code Synthesizer Modulation	(0-20 KHz deviation in 10 Hz steps) (Note: 3) (0-90% AM in 0.1% steps)
RF level	RF level settable to any displayable level (-140 to +11 dBm in 0.1 dBm steps (Note: 3) (Note: 4)
Offset Oscillator Adjust	Duplex Generator Frequency Settable from f_0 to $f_0 \pm 10$ MHz in 1 KHz steps (Switch) placed in 0-10 MHz position) (Note: 3)
Scope Vertical Step Attenuator	0.01, 0.1, 1, 10 volts
Horizontal Scope Sweep	1, 10, 100 milliseconds 1, 10, 100 microseconds External
Input Power Meter	Reading returned as displayed on screen (Note: 3)
Frequency Error	
Deviation + or -	
% AM + or -	
SINAD	
External DVM (AC or DC)	
External Frequency Count	
External Power Meter FWD/REV	

Notes: (1) May be affected by other controls (see below).
(2) Sequence 5 timing is programmable under IEEE bus control.
(3) As reading is displayed, LED corresponding to appropriate display and function mode will illuminate.
(4) The IEEE-Bus option, due to a change in the RF step attenuator, restricts the maximum RF output to +11 dBm.

NON-CONTROLLABLE FUNCTIONS

Since control and monitor functions of the interface are implemented to obtain remote measurement capability, certain front panel controls are not implemented in the interface due to their local operator orientation. A list of these operator oriented controls are as follows:

Power On/Off
Power Mode Indicators
Display Focus
Display Intensity
Dispersion/Sweep
Scope/DVM Vertical Vernier
Scope Trigger Level
Scope Trigger Slope
Scope Horizontal Sweep Vernier
Scope Vertical Position
Scope Horizontal Position
Receiver Squelch
Receiver Volume
Zero Beat Indicator
RF Scan
RF Memory Table
Tone Sequences, 6, 7, and 8 Entries
Deviation Limit
Battery Voltage Reading
Deviation Limit Alarm (Disabled Under Remote Control)
Attenuator 0 Indicator
Battery Below Limit Warning
BFO Frequency Adjust

8521-66

22-7. IEEE-488 BUS STRUCTURE

22-8. The following discussion briefly describes the 488 Bus operation. It is not a complete definition of the total bus structure or capability. For complete information a copy of IEEE Standard 488 should be obtained.

22-9. Bus Signals. The IEEE-488 Bus consists of 16 parallel lines. The lines are divided into three groups. Lines DI01-DI08, Data Input Output, form the 8-bit data bus for the bidirectional transfer of control and ASC II characters. Three handshake lines, Data Valid (DAV), Not Ready for Data (NRFD), and Not Data Accepted (NDAC), control the transfer of data on the data bus. The remaining five lines can be termed the bus management lines with functions as follows:

Attention (ATN)	— When true the data bus carries an address or a comand when false it carries data.
Interface Clear (IFC)	— When true all devices on the bus are placed in a known quiescent state.
Service Request (SRQ)	— Indicates a device on the bus needs service.
Remote Enable (REN)	— Enables the remote control feature of the devices on the bus.
End or Indentify (EOI)	— Indicates the end of a multiple byte transfire.

22-10. Data Transfer. Each byte of data that is transferred across the data bus is synchronized with a handshaking procedure. This procedure allows devices with different data transfer rates to share the same bus. The handshake cycle starts when the source device which has data to transfer checks for a false condition on the NRFD line. When NRFD is false, all devices on the bus are ready to accept data. The source then puts the data onto the data bus and sets the DAV to its true state. The acceptor devices input the data, set the NRFD line to its true state, and when ready sets the NDAC line to its false state. Because the NRFD and NDAC lines are wire-ORed the line will not go to the false state until all devices on the bus have released the line. Thus the slowest device on the bus determines the transfer rate. When the NDAC line goes false the source devices sets the DAV false which in turn causes the acceptor devices to set the NDAC line true. When the acceptor devices have completed processing the data byte just received they allow the NRFD line to go to the false state completing the handshake. As the data transfer continues the cycle repeats for each data byte.

22-11. Bus Address. Each device on the bus is assigned a four bit address by the programer. The address assigned to the device is set by an address switch within the device. On the analyzer the address switch is on the IEEE Interface Module. Only the top four switches are used to set the address. The fifth switch is unused. To set the address use the binary equivalent of the address number and set the switches to the ON position for a logic 1. The least significant bit is the top switch.

22-12. Programing

22-13. Programing the system analyzer consists of first addressing the unit as a listener, transferring the control commands to the unit, and then sending a command termination sequence. To obtain data from the system, the pertinent control commands are first transferred to the unit and then the unit is addressed as a talker. As a talker the system outputs onto the bus the data requested by the control commands.

22-14. The bus controller is the central part of the automatic system. The program, consisting of sequences of analyzer control commands and sequences of controller instructions for handling the return data, is contained within the controller. The user must initially write the program so that the desired test sequences and data outputs will be obtained. The following paragraphs define the instruction set and data formats that can be used to control or will be returned from the system analyzer. The user must insure that the controller is compatible with the IEEE-488 Standard bus and that its program is correct for the instruments on the bus.

22-15. Command Structure. Each command consists of a two letter definition prefix followed by a numeric data field. The data field will vary in length and structure according to the definition prefix as shown in table 22-3. Spaces may be inserted anywhere in the command but are not required. Each letter or number of a command is transferred from the bus controller to the^nalyzer in ASCII format. ASCII defines a 7-bit digital code for each letter, number, and symbol commonly used in computer programming.

22-16. The first letter of the two letter prefix identifies a command category with the second letter identifying a particular command within that category. A listing of the command categories and the corresponding first letter is provided in table 22-2. A complete list of commands is shown in table 22-3.

Table 22-2. Command Categories

A	Audio Synthesizer
C	Control
F	Frequency Counter
G	Generate/Monitor Control
K	Keyboard
M	Modulation
O	Oscilliscope
R	Receiver
V	Voltmeter
W	Wattmeter

22-17. The data field is comprised of five sub-fields as shown:

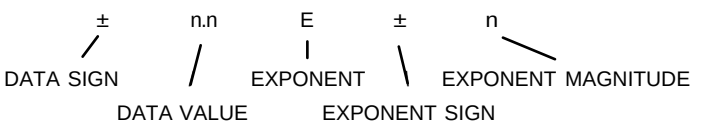

Data limits and accompanying units are given in table 22-3. The data field is optional or not allowed for certain commands.

22-18. Data Sign. The data sign is a single'+'or'-'character indicating the sign of the data value. The sign may be omitted for positive value data.

22-19. Data Value. The data value field is restricted to the numbers '0' through '9' and'.'. A maximum of five digits to the right and to the left of the decimal point are allowed. The decimal point can be omitted for integer values. If the value field is omitted, it is assumed to be zero.

22-20. Exponent. The presence of the "E" character in the exponent field indicates that the data value is to be multiplied by 10 raised to the power following the "E" character. If the "E" is omitted the exponent is assumed to be 10° or 1.

22-21. Exponent Sign. The exponent sign is a single + or - character and can be omitted for positive exponent values.

22-22. Exponent Magnitude. The exponent magnitude is a single character 0 through 9. If the exponent magnitude is omitted, it is assumed to be zero.

Table 22-3. Programming Commands

Prefix	Data	Units	Type	Function	Changes To Display	Changes To Function	Changes To Mode
				AUDIO GENERATOR			
AA	0-9999.9	HZ	D	Tone A Frequency			
AB	0-9999.9	HZ	D	Tone B Frequency			
AP	0-999.9	HZ	D	PL Frequency			
AD	0-777	—	D	DPL Code			
AS	0-5	—	D	Audio Sequence Select			
AW	0-9.99	SEC	D	A ON, User Seq. (AS=5)			
AX	0-9.99	SEC	D	A OFF, User Seq. (AS=5)			
AY	0-9.99	SEC	D	B ON, User Seq. (AS=5)			
AZ	0-9.99	SEC	D	B OFF, User Seq. (AS=5)			
				CONTROL			
CD	0-12	—	C	Display Select 0 Gen-Mon Mtr 1 Modulation 2 Spect Analyzer 3 Duplex Gen 4 RF Mem 5 Tone Mem 6 Freq Counter 7 DVM 8 Ext Wattmeter 9 IF 10 Scope AC 11 Scope DC 12 Terminal	1		
CF	0-5	—	C	Function Select 0 FM 1 CW 2 AM 3 SSB/DSBSC 4 SWP 1-10 MHz 5 SWP 0.01-1 MHz		1	
CG	—	—	C	Generate Mode			GEN
CM	—	—	C	Monitor Mode			MON
CP	—	—	C	Power Monitor Mode			PWR MON
				FREQUENCY COUNTER			
FC	0-35000	kHz	O	External freq count	2		
				GENERATE/MONITOR			
GF	0-999.9999	MHz	D	Generate/Monitor Frequency			
GL	-130.0 to +13.0	DBM	C	Generate RF Level			GEN
				KEYBOARD			
K1	0-127	—	D	Display Up Key Data			
K2	0-127	—	D	Display Down Key Data			
K3	0-127	—	D	Function Up Key Data			
K4	0-127	—	D	Function Down Key Data			

Table 22-3. Programming Commands (Cont)

Prefix	Data	Units	Type	Function	Changes To Display	Changes To Function	Changes To Mode
K5	0-127	—	D	Mode Up Key Data			
K6	0-127	—	D	Mode Down Key Data			
				MODULATION			
MB	—	—	C	Modulation Burst			
MC	—	—	C	Modulation Continuous			
MO	—	—	C	Modulation Off			
MM	0-5	—	C	Modulation Mode 0 PL/DPL 1 PL/DPL div 2 Tone A 3 Tone B 4 A/B 5 Tone Remote			
ME	0-99.9	kHz (FM) % (AM)	C	External Mod Level		3	GEN
MK	0-99.9	kHz (FM) % (AM)	C	1 kHz Mod Level		3	GEN
MS	0-99.9	kHz (FM) % (AM)	C	Code Synthesizer Mod Level	—	3	GEN
				OSCILLOSCOPE			
OH	0-6	—	C	Horizontal Sweep Select 0 1 micro sec/div 1 10 micro sec/div 2 100 micro sec/div 3 1 milli sec/div 4 10 milli sec/div 5 100 milli sec/div 6 External			
OV	0-3	—	C	Vertical Gain Select 0 10 V/div 1 1 V/div 2 0.1 V/div 3 0.01 V/div			
				RECEIVER			
RH	—	—	C	High Image			
RL	—	—	C	Low Image			
RN	—	—	C	Narrow band			
RW	—	—	C	Wide band			
RA	0-13	10's dB	C	Receive Mode Step Attenuator Setting 0 0 dB 1 10 dB 1 10 dB 1 10 dB 13 130 dB			
RE	0-100	—	O	Receive frequency error	4		MON

Table 22-3. Programming Commands (Cont)

Prefix	Data	Units	Type	Function	Changes To Display	Changes To Function	Changes To Mode
RP	0-1	—	O	Signal Presence Indication 0 No signal 1 Signal present			MON
R-	0-99.99	kHz	O	Minus Deviation	4	FM	MON
R+	0-99.99	kHz	O	Plus Deviation	4	FM	MON
R	0-99.99	%	O	Minus % AM	4	AM	MON
R	0-99.99	%	O	Plus % AM	4	AM	MON
				VOLTMETER			
VA	0-300	VOLTS	O	DVM AC	5		
VD	0-300	VOLTS	O	DVM DC	5		
VS	0-40.0	dB	O	Sinad Reading	4	6	GEN
				WATTMETER			
WE	1-9	—	D	Wattmeter element number 1 2.5 W 2 5 W 3 10 W 4 25 W 5 50 W 6 100 W 7 250 W 8 500 W 9 1000 W			
WI	0-132.0	WATTS	O	Internal Wattmeter reading	4		PWR MON
WF	0-1000	WATTS	O	Forward External Wattmeter Reading	7		
WR	0-1000	WATTS	O	Reverse External Wattmeter Reading	7		

Notes:
1. Display is defined by the data
2. External Frequency Counter Display
3. FM if not AM
4. Gen/Mon Mtr Display
5. DVM Display
6. FM if in DSBSC or SWEEP
7. External Wattmeter Display

22-23. The following are examples of correct data fields for the value 12.34:

0.1234 E+2	+0.1234 E2	1234 E-2	1234. E-2
+12.34	12.34 E	+1234 E-2	12.34 EO

22-24. Command Strings. A command string consists of either a single command or multiple commands in succession with or without embedded spaces. A command string must be terminated with a carriage return and a line feed character.

22-25. Command Types. Eachcommand isoneofthreebasictypes,controlselects(C),dataentry(D),and output requests (0). Type information for each command is listed in table 22-3.

22-26. Control Selects. Control select commands select front panel switch settings. Some of these commands do not require accompanying data, such as toggle switch commands.

22-27. Data Entry. Data entry commands replace manual entry of data through the keyboard. All of these commands require data in the data field.

22-28. Output Requests. Output request commands allow data that is normally displayed on the CRT to be transferred to the controller. Accompanying data is not required with output requests. The data limits and units listed in table 22-3 for these commands refer to the return data. Output request commands cause the analyzer to go to the proper display, function, and mode to acquire the designated reading. These states are listed in table 22-3. The measurement however, is not made until a trigger command 'T' has been sent from the controller. The trigger command causes the measurement to be made and the data held for transmission to the controller. Then when the controller addresses the analyzer as a talker the data is output to the controller. A reading can be retaken for any number of triggers without repeating the output request. The request is lost however, when any command changing the display, function, or mode is sent.

22-29. Trigger Command. The trigger command is the exception to the two character command prefix. This command is simply the letter T' usually sent immediately following the output request command. If no output request is pending, the trigger command is ignored.

22-30. Return Data. The data returned from the analyzer is formatted similar to the control data as shown:

The data is always returned in this format with a single exception. Data for the "RP", signal present, command is returned as a single digit having a value of "0" or "1".

22-31. Data Sign. A + or - character indicates the sign of the return data.

22-32. Data Value. The data value is 1 to 5 digits in length with leading zero supression and no decimal point.

22-33. Exponent and Exponent Sign. The letter 'E' followed by a '-' character is always transmitted with return data.

22-34. Exponent Magnitude. The exponent magnitude is a single digit with a value from 0 to 9. The digit indicates the negative power of ten that is to be multiplied with the data value to obtain the units listed in table 22-3.

22-35. Programming Commands. Table 22-3 lists the programming commands available for the system analyzer. The table identifies the category and type of command, the data limits and units, the command function, and any display, function, or mode change that would occur.

22-36. Terminal Mode. When the command 'CD12' is used, the system terminal mode is enabled. The terminal mode allows the analyzer's CRT display and keyboard to perform as a limited function I/O terminal. • Possible uses for the terminal mode would be to provide test instructions to a test operator at an auto test station.

22-37. Display Format. Once the 'CD12' command has been sent the terminal mode has been entered. All further ASCII valid characters sent from the controller will appear on the CRT display. The total display area on the CRT is 15 lines of 30 characters each. Character entry on the CRT is on the bottom line. Each linefeed character causes the bottom line to move up one place. If more than 30 lines are entered, the top lines are lost off the top of the display. A list of valid ASCII characters for the display is provided in table 22-4. All invalid characters are ignored in the terminal mode.

22-38. Keyboard Entry. In the terminal mode the keyboards on the analyzer may be used to input data to the bus controller. The ten numeric keys and the left cursor key have predefined ASC 11 characters. The character corresponds to the number on the key for the numeric keys. For the left cursor key, carriage return and line feed characters are sent. The down cursor key causes a bus service request to be generated regardless of the operating mode. Thus this key could be used to halt an automatic test sequence.

22-39. The remaining pushbuttons are defined, prior to entering the terminal mode, with the use of the keyboard control commands listed in table 22-3. Each key is assigned an ASCII character by following the Kn command prefix with the decimal equivalent of the binary ASCII code for that character. A list of valid ASCII characters and their binary and decimal equivalents are listed in table 22-4.

22-40. Data that is entered from the keyboard is stored in a 9 character buffer until addressed by the bus controller. If more than 9 keypresses occur before the controller accesses the analyzer, the excess inputs are lost. Once the controller has addressed the analyzer, the analyzer transmits the character data to the controller. The analyzer will continue to transmit, or hold up the bus handshake if no keys have been pressed, until the left cursor key is pressed. Thus every data string entry from the keyboard must terminate with the left cursor key. As the data is transmitted to the controller it is also entered onto the CRT display.

22-41. Terminal Mode Exit. An ASCII end of transmission character (EOT) sent from the controller will terminate the terminal mode. When the mode is terminated the analyzer returns to the Gen/Mon Mtr display, and is ready to accept new command inputs.

22-42. Error Messages. Error messages are generated by the analyzer to help the programmer troubleshoot his program. As control commands are received by the analyzer, they are decoded to determine the command sent. If the analyzer is unable to decode the command it generates an error message and ignores all succeeding commands. To clear the error condition the bus controller must address the analyzer as atalker so that the error message will be transferred to the controller.

Table 22-4. Terminal Mode ASC II Characters
Printable Characters

ASCII Char.	Equivalent Binary	Hex	Dec	ASCII Char.	Equivalent Binary	Hex	Dec
SP	00100000	20	32	@	01000000	40	64
!	00100001	21	33	A	01000001	41	65
"	00100010	22	34	B	01000010	42	66
#	00100011	23	35	C	01000011	43	67
$	00100100	24	36	D	01000100	44	68
%	00100101	25	37	E	01000101	45	69
&	00100110	26	38	F	01000110	46	70
'	00100111	27	39	G	01000111	47	71
(	00101000	28	40	H	01001000	48	72
)	00101001	29	41	I	01001001	49	73
*	00101010	2A	42	J	01001010	4A	74
+	00101011	2B	43	K	01001011	4B	75
,	00101100	2C	44	L	01001100	4C	76
-	00101101	2D	45	M	01001101	4D	77
.	00101110	2E	46	N	01001110	4E	78
/	00101111	2F	47	O	01001111	4F	79
0	00110000	30	48	P	01010000	50	80
1	00110001	31	49	Q	01010001	51	81
2	00110010	32	50	R	01010010	52	82
3	00110011	33	51	S	01010011	53	83
4	00110100	34	52	T	01010100	54	84
5	00110101	35	53	U	01010101	55	85
6	00110110	36	54	V	01010110	56	86
7	00110111	37	55	W	01010111	57	87
8	00111000	38	56	X	01011000	58	88
9	00111001	39	57	Y	01011001	59	89
:	00111010	3A	58	Z	01011010	5A	90
;	00111011	3B	59	[	01011011	5B	91
	00111100	3C	60		01011100	5C	92
=	00111101	3D	61	]	01011101	5D	93
	00111110	3E	62		01011110	5E	94
?	00111111	3F	63	-	01011111	5F	95

NON-PRINTING CHARACTERS

ASCII Char.	Equivalent Binary	Hex	Dec
EOT*	00000100	04	4
BELL	00000111	07	7
BSP	00001000	08	8
LF	00001010	0A	10
CR	00001101	0D	13

*causes exit from terminal mode

22-43. The format of the error message is:

ERROR nn (CR)(LF)

The two digit number nn defines the error condition as listed in table 22-5. The carriage return (CR) and line feed (LF) characters are the termination sequence used by analyzer whenever it transmitts information. All characters are ASC II coded.

Table 22-5. Error Messages

Error Code	Condition
00	Data requested without trigger
01	Involid mnemonic prefix
02	One character mnemonic (not T)
03	Invalid mnemonic suffix
04	Exponent overflow
05	Data underflow
06	Data overflow
07	Data transmitted, not allowed
08	Invalid data
09	RF input power exceeded
10	Level or mod control error

22-44. To effectively utilize the error message capability of the analyzer it is necessary to address the unit as a talker after the transmission of each command string. The bus controller must then be programmed to recognize the error message and to decode the error number. A successful data transmission wilt send back an error code 00 when addressed as a talker. The controller should be programmed to ignore error 00 and to display any other error to the operator. Of course if a valid output command followed by the trigger command was sent, the talker address will result in the requested data being output to the controller.

22-45. Service Requests. There are only two conditions that will cause the analyzer to generate a service request (SRQ) on the bus. IfaSRQ is generated it must be cleared by a serial poll of the analyzer. The serial poll is a bus command which results in a data byte being sent to the controller from the analyzer. The data byte indicates the cause of the SRQ. Table 22-6 lists the SRQ causes and the corresponding serial poll data.

Table 22-6. SRQ Data

	Return Data		
Condition	Binary	HEX	DEC
Depressing Cursor Down Key	01000001	41	65
RF load over Temperature	01000010	42	66

22-46. Programming Considerations. The flexibility of the IEEE-488 option is reflected in the number of programming commands. To use these effectively and efficiently, certain programming practices should be followed. The following paragraphs present the major considerations for effective programming.

22-47. Generate Mode. For accurate level control it is best to specify the generate frequency priortotheRF output level. For example, the command string:

CGGFIOOGL5

sets the generate mode, a frequency of 100 MHz and an output level of +5 dBm.

22-48. Code Synthesizer. Before enabling the output of the code synthesizer with an MS, ME, or MK command, all the necessary parameters must first be defined. Table 22-7 lists the modes and their controlled parameters that need to be defined. It should be noted that these parameters do not need to be defined each time a mode Is selected, only when they are to be changed for that mode.

Table 22-7. Code Synthesizer Programming Considerations

Output	Command String	Effect
DPL Code	CFOAD131MMOMS3	FM, DPL Code 131, 3 kHz FM
DPL Inverted Code	CFAD313MM1MS5	FM, DPL Code 313, 5 kHz FM
PL Code	CF2AP60.5MMMS30	AM, PL-60.5 Hz, 30% AM
Tone A	CFAA2E3MM2MS3	FM, 2000 Hz, 3 kHz FM
Tone B	CFAB2000MM3MS3	FM, 2000 Hz, 3 kHz FM
Tone Remote	CFAA1.5E3AB300MM5MS3	FM, A = 1500 Hz, B = 300 Hz, 3 kHz FM
A/B Standard Sequence	CFAS4AA1E3AB2E3MM4MS3	FM, Sequence 4, A = 1 kHz, B = 2 kHz, 3 kHz FM
A/B User Sequence	CFAS5AA1E3AB2E3AW1	FM, Sequence 5, A = 1 kHz, B = 2 kHz
	AX1AY1AZ1MM4MS3	**1 sec** on/off times, 3 kHz FM

22-49. Modulation. The system analyzer is capable of modulating with three simultaneous sources. The commands ME, MK, and MS only affect their individual portion of the total output. Thus to avoid inadvertently having an unwanted modulation source enabled it is recommended that all three source values be defined together. For example;

CFMKMSME20

selects the FM mode, disables the 1 kHz and code synthesizer modulation, and set 20 kHz deviation from the external input. The external input must be applied to the analyzer prior to sending this command.

22-50. For the generate AM mode the frequency and output level must be defined prior to selecting the modulation level. The following command string is of the proper sequence to obtain 30% AM at 100 Mz with a level of-100 dBm:

CGGF100GL-100MEMSMK30

22-51. The bandwidth control commands, RN and RW, range the generate FM modulator sensitivity. For greater resolution and faster set up time for deviations less than 20 kHz use the narrowband 'RN' command. Above 20 kHz deviation the wideband 'RW command must be used.

22-52. Measurements. To obtain correct monitor mode data it is necessary to first set the frequency, bandwidth, and image prior to making the reading. Thus, it is a good practice to always place the request for a reading as the last command in the string. For example the command string:

CMRNRHGF95.5RET

selects the monitor mode, narrowband, high image, and 95,5 MHz center frequency. The 'RET' command asks for a frequency error reading and triggers the analyzer so that the reading will be made.

22-53. General. Overall, programming the analyzer involves the same steps as are involved when using it. manually. A program can be fairly easily obtained by first performing the desired test sequence manually noting each time a setting is changed and a reading made. The program is then simply a duplication of the manual steps with control commands substituted.

22-54. R2002A Analyzer Configuration

The R2002A analyzer differs in configuration from the standard R2001A in the following manner:

A11 Module: The manual attenuator AT1 is replaced with a programmable version (P/N RTL-4064A). A new ribbon cable assembly connected to the A8 module provides control signals for the attenuator. The module is reidentified for ordering purposes as RTC-1003A.

A9 Module: Additional memory for the IEEE program is added by adding U36 (E-PROM TMS 25L32).

Front Panel Assembly A14: Rotary switch S19 is added for control of the RF Input/Output level. The switch P/N is40-P04127T001.

Module AS is added to the analyzer (see Section 14 for details). Ribbon cable assembly 30-P04147T001 is added from the A8 module to the rear panel of the analyzer to provide I/O signals.

The R2002A also contains blower assembly A15 for additional cooling (see Section 21).

MOTOROLA INC.
Communications Group

MOTOROLA BATTERY PACK

MODEL RTP-1002A

1. DESCRIPTION

The RTP-1002A is a battery pack and charger designed to be mounted to the back of the R-2001A Communications System Analyzer. The unit contains battery capacity to operate the R-2001A for approximately one hour. A constant current charging system is capable of recharging the batteries in 16 hours.

2. OPERATION

2.1 The RTP-1002A Battery Pack is automatically engaged when no ac power is present, and the power switch is either in the ON or STANDBY positions. When ac power is applied, the R-2001A automatically switches the RTP-1002A Battery Pack out of the circuit and draws its power from the ac power source.

2.2 When the power switch is in the OFF or STANDBY position and ac power is applied to the R-2001A, the RTP-1002A Battery Pack draws dc current from the R-2001A to activate the charging circuit. The charging circuit delivers approximately 750 mA of current until the battery voltage reaches 14 volts. As the battery voltage reaches 14 volts, the current drops to approximately 25 mA and the high-charge indicator LED extinguishes.

2.3 When the R-2001A systems analyzer is used with the RTP-1002A Battery Pack, it is recommended to keep the power switch in the STANDBY position whenever possible. This extends the time the battery is able to operate the R-2001A Communications System Analyzer. The low trickle charge rate enables the batteries to be left on charge indefinitely without damage due to overcharging.

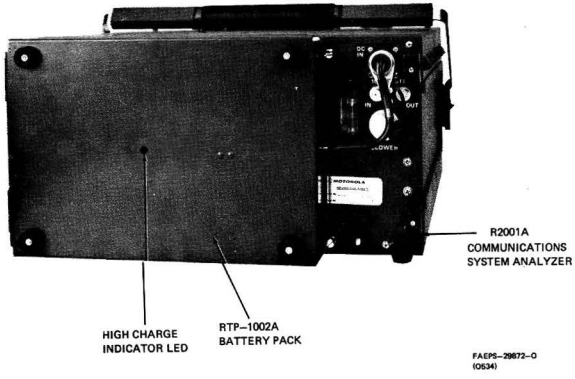

RTP-1002A Battery Pack Mounting Detail

© Motorola, Inc. 1980
All Rights Reserved
Printed in U.S.A.

technical writing services
1301 E. Algonquin Road, Schaumburg, Il. 60196

68P81122E59-A
5/30/80-SK

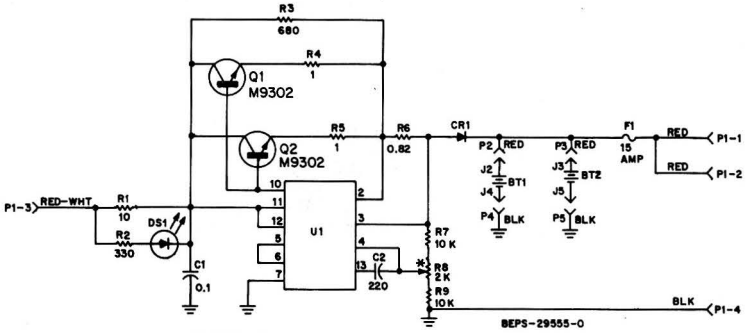

* WITH THE BATTERIES REMOVED (BT1 AND BT2) AND A 30–OHM; 10 WATT RESISTOR IN PLACE OF THE BATTERIES, SET R8 FOR 14.1 V USING A DIGITAL VOLTMETER ACROSS THE BATTERY TERMINALS.

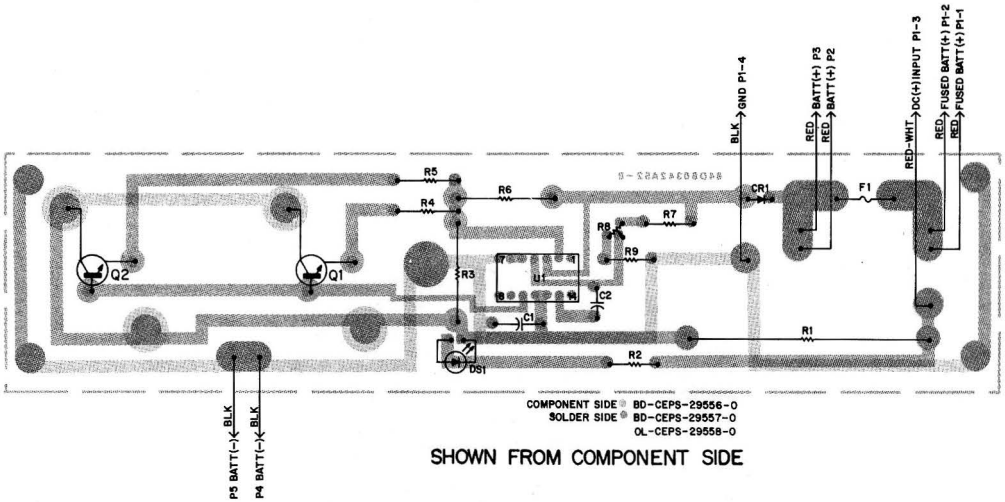

SHOWN FROM COMPONENT SIDE

RTP-1002A Battery Pack
Schematic Diagram, Circuit Board Detail,
Parts Location Detail, and Parts List
Motorola No. ***PEPS-29554-O***
(Sheet 1 of 2)
3/24/80-SK

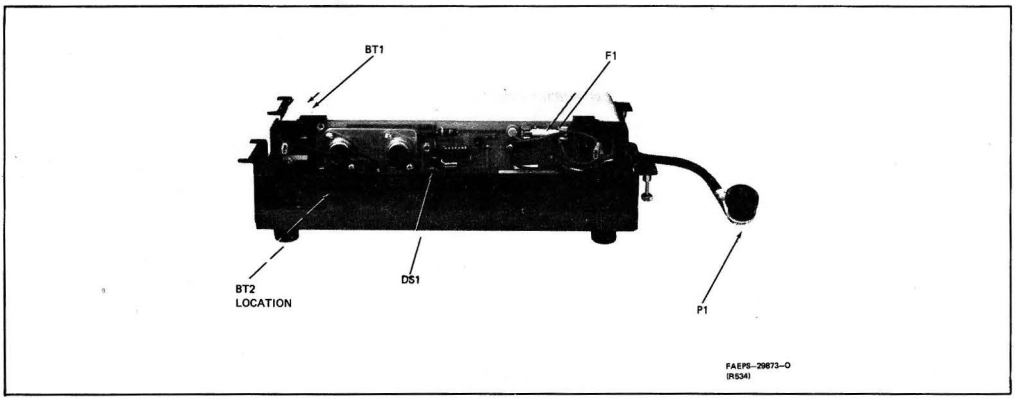

RTP-1002A Battery Pack Parts Location Detail

parts list

RTP-1002A Battery Pack — PL-6816-O

REFERENCE SYMBOL	MOTOROLA PART NO.	DESCRIPTION
		battery, 12 V:
BT1, 2	60-80340A88	6-cell
		capacitor, fixed:
C1	8-82096J18	.1 uF ± 10%; 250 V
C2	21-83596E10	220 pF ± 20%; 500 V
		diode: (see note)
CR1	48-82525G01	silicon
		light emitting diode:
DS1	48-82019L05	LED
		fuse:
F1	65-804906	15A slow blow
		transistor: (see note)
Q1, 2	48-869302	NPN; type M9302
		resistor, fixed: ± 10%; 1/4 W: unless otherwise stated
R1	17-80344A60	10; 10 W
R2	6-124C37	330
R3	6-126C45	680; 1 W
R4, 5	6-125B70	1 ± 5%; 1/2 W
R6	17-80344A70	0.82; 2 W
R7	6-124A73	10k ± 5%
R8	18-80342A10	variable: 2k ± 20%; 1/2 W
R9	6-124A73	10k ± 5%
		integrated circuit: (see note)
U1	51-84320A42	MC1723CL

note: For optimum performance, replacement diodes, transistors and integrated circuits must be ordered by Motorola part numbers.

REFERENCE SYMBOL	MOTOROLA PART NO.	DESCRIPTION
		non-referenced items
	1-80304A71	BATTERY CASE includes:
	27-80335A41	CASE, battery
	3-80340A89	SCREW, captive: 6-32 x 21/32"; 2 used
	41-80342A53	SPRING, clip
	15-80340A92	COVER, battery case
	1-80304A72	CIRCUIT BOARD ASSEMBLY includes:
	42-82690A01	CLIP, fuseholder: 2 used
	43-865080	STANDOFF, threaded: 4 used
	1-80304A73	LEAD ASSEMBLY, battery (red) includes:
	30-10310A26	WIRE, No. 16 stranded: 4-1/2" used
	29-859118	CONTACT, receptacle
	1-80304A74	LEAD ASSEMBLY, battery (black) includes:
	10-134301	WIRE, No. 16 stranded: 4-1/2" used
	29-859118	CONTACT, receptacle
	3-120938	SCREW, machine: 4-40 x 5/16"; 4 used
	4-7667	WASHER, lcok: No. 4 external tooth; 4 used
	64-80342A54	PLATE, heatsink
	1-80303A91	CABLE ASSEMBLY includes:
	15-10811A08	HOUSING, connector: 4-pin
	9-83741F01	CONTACT, receptacle: 4 used
	42-80340A90	CLAMP, cable
	2-2888	NUT, hex: 5/8-24
	2-7005	NUT, hex: 6-32; 4 used
	4-7666	WASHER, lock: No. 6 external tooth; 4 used
	14-80340A91	INSULATOR BOARD
	75-82566B01	FOOT, rubber: 4 used
	3-80342A46	SCREW, machine: 6-32 x 1/2"; 4 used
	3-136774	SCREW, machine: 4-40 x 1/4"; 5 used
	3-132840	SCREW, machine: 8-32 x 5/8"; 2 used
	4-7667	WASHER, lock: No. 4 external tooth; 5 used
	42-850925	CLAMP

RTP-1002A Battery Pack
Schematic Diagram, Circuit Board Detail, Parts Location Detail, and Parts List
Motorola No. ***PEPS-29554-O***
(Sheet 2 of 2)
3/24/80-SK

COMMUNICATIONS SYSTEM ANALYZER

68P81069A84-O