CM6200

FRAISEUSE CIRCULAIRE

MANUEL DE FONCTIONNEMENT DE LA CM6200

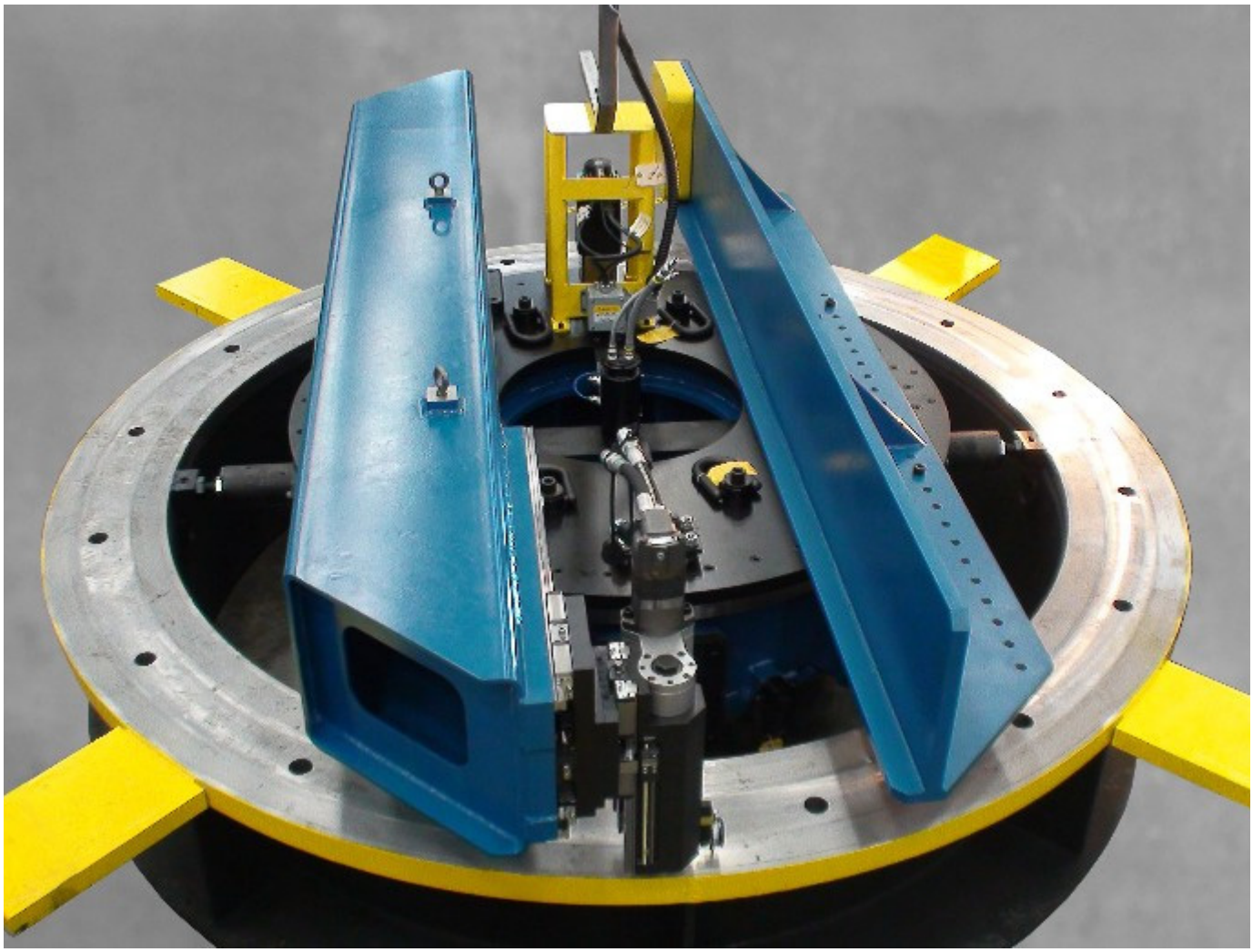

CLIMAX
Portable Machining & Welding Systems

Réf. 63674-F
March 2022
Révision 9

CLIMAX | BORTECH CALDER H&S TOOL

Pour CLIMAX, votre avis est précieux.

Pour tout commentaire ou toute question à propos de ce manuel ou d'autres documents de Climax, veuillez envoyer un courriel à
documentation@cpmt.com.

Pour tout commentaire ou question à propos des produits ou des services de CLIMAX, veuillez appeler CLIMAX ou envoyer un courriel à info@cpmt.com. Pour un service rapide et précis, veuillez transmettre les informations suivantes à votre représentant :

- Votre nom
- Adresse de livraison
- Numéro de téléphone
- Modèle de la machine
- Numéro de série (le cas échéant)
- Date d'achat

Siège mondial de CLIMAX

2712 East 2nd Street
Newberg, Oregon 97132 États-Unis

Téléphone (international) : +1-503-538-2815
Appel gratuit (Amérique du Nord) : 1-800-333-8311
Fax : 503-538-7600

Siège mondial de H&S Tool

715 Weber Dr.
Wadsworth, OH 44281 États-Unis

Téléphone : +1-330-336-4550
Fax : 1-330-336-9159
hstool.com

CLIMAX | H&S Tool (siège au Royaume-Uni)

Unité 7 zone industrielle de Castlehill
Bredbury Industrial Park
Horsfield Way
Stockport SK6 2SU, Royaume-Uni

Téléphone : +44 (0) 161-406-1720

CLIMAX | H&S Tool (siège Européen)

Am Langen Graben 8
52353 Düren, Allemagne

Téléphone : +49 24-219-1770
E-mail : ClimaxEurope@cpmt.com

CLIMAX | H&S Tool (siège Asie-Pacifique)

316 Tanglin Road 02-01
247978 Singapour

Téléphone : +65 9647-2289
Fax : +65 6801-0699

CLIMAX | H&S Tool (siège Moyen-Orient)

Warehouse 5, Plot : 369 272
Um Sequim Road
Al Quoz 4
PO Box 414 084
Dubai, ÉAU

Téléphone : +971 04-321-0328

IMPLANTATIONS MONDIALES DE CLIMAX

DOCUMENTATION CE

Declaration of Conformity

2006/42/EC Machinery Directive

2014/35/EU Low Voltage Directive

2014/30/EU EMC Directive

Name of Manufacturer:
Climax Portable Machining and Welding Systems
Full postal address including country of origin:
2712 E. Second St., Newberg, OR 97132, USA
Object(s) of the Declaration:
Portable Milling Machine(s)

Name, type or model, batch or serial number:
CM6200 S/N Range: 150000268 and up
Harmonised Standards used, including number:
BS EN ISO 13854:2019 - Safety of Machinery; Gaps
EN ISO 13849-1:2015 - Safety of Machinery; Controls
BS EN ISO 4413:2010 - Safety of Machinery; Fluid Power
EN ISO 13850: Safety of Mach-E Stop
EN ISO 11201:2010 - Acoustics; Noise Emitted
EN ISO 13857:2019 Safety of mach-Safe Distances
EN ISO 12100:2010 - Safety for Machinery; Principles
EN ISO 13732-1:2008 - Temperature of Touchable Surfaces
EN 60204-1:2018 - Safety of Machinery; Electrical Equipment
EN 61000 series - EMC Emissions and Immunity

Full postal address of the authorized person in the Community:
Guido Ewers zum Rode
Climax GmbH
Am Langen Graben 8
52353 Duren, Germany

Approved as conforming to Standard ISO 9001:2015 by:
Eagle Registrations Inc.
40 N. Main Street, Suite 1880
Dayton, OH 45423

Declaration
I declare that the above information in relation to the supply / manufacture of this product is in conformity with the relevant provisions of the Directives and Harmonised Standards listed above in this document along with their respective amendments and other related documents. This declaration of conformity is issued under the sole responsibility of the manufacturer.

Signature of Manufacturer: _____ **Position: VP of Engineering**

Date and Place: 3/2/2022, **USA**

CE

CE	N° standard **EN 3744 & EN 11201**	CLIMAX

Le niveau de **puissance sonore** déclaré est :	L_{WA}=	74,4	dBA
La ***pression sonore*** **pour l'opérateur** est :	L_{pA}=	65,2	dBA
Le niveau de ***pression sonore déclaré*** **pour un tiers** est :	L_{pA}=	65,3	dBA

GARANTIE LIMITÉE

Climax Portable Machine Tools, Inc (ci-après dénommée « CLIMAX ») garantit que toutes les machines neuves sont exemptes de défauts matériels et de fabrication Cette garantie est offerte à l'acheteur original pour une période d'un an après la livraison Si l'acheteur original constate un défaut matériel ou de fabrication pendant la période de garantie, il doit contacter le représentant de son usine et renvoyer la machine entière, port payé, à l'usine CLIMAX, à sa discrétion, réparera ou remplacera la machine défectueuse sans frais et renverra la machine en port payé.

CLIMAX garantit que toutes les pièces sont exemptes de défauts matériels et de fabrication, et que toute la main-d'œuvre a été exécutée correctement Cette garantie est offerte au client qui achète les pièces ou la main-d'œuvre pour une période de 90 jours après la livraison de la pièce ou de la machine réparée ou 180 jours sur les machines et composants usagés Si le client qui achète les pièces ou la main-d'œuvre constate un défaut matériel ou de fabrication pendant la période de garantie, l'acheteur doit contacter son représentant d'usine et retourner la pièce ou la machine réparée, port payé, à l'usine CLIMAX, à sa discrétion, réparera ou remplacera la pièce défectueuse et/ou corrigera tout défaut de main-d'œuvre effectuée, les deux sans frais, et retournera la pièce ou la machine réparée en port payé.

Ces garanties ne s'appliquent pas dans les cas suivants :

- Dommages après la date d'expédition non causés par des défauts matériels ou de fabrication
- Dommages causés par un entretien incorrect ou inadapté de la machine
- Dommages causés par une modification ou une réparation non autorisées de la machine
- Dommages causés par un mauvais traitement de la machine
- Dommages causés par une utilisation de la machine au-delà de sa capacité nominale

Toutes les autres garanties, explicites ou implicites, notamment, et sans limitation, les garanties de valeur marchande et d'adéquation à une utilisation particulière, sont rejetées et exclues.

Conditions de vente

Veillez à prendre connaissance des conditions de vente qui figurent au verso de votre facture Ces conditions contrôlent et limitent vos droits à l'égard des biens achetés chez CLIMAX.

À propos de ce manuel

CLIMAX fournit le contenu du présent manuel de bonne foi à titre d'aide pour l'opérateur. CLIMAX ne peut pas garantir que les informations contenues dans le présent manuel sont correctes pour des applications différentes de celles qui y sont décrites ; les spécifications du produit sont sujettes à modification sans préavis.

SOMMAIRE

SOMMAIRE (SUITE)

CHAPITRE/SECTION **PAGE**

SOMMAIRE (SUITE)

CHAPITRE/SECTION **PAGE**

SOMMAIRE (SUITE)

LISTE DES FIGURES

FIGURE **PAGE**

LISTE DES FIGURES (SUITE)

FIGURE **PAGE**

LISTE DES FIGURES (SUITE)

FIGURE **PAGE**

LISTE DES FIGURES (SUITE)

FIGURE **PAGE**

LISTE DES TABLEAUX

TABLEAU **PAGE**

Cette page est laissée vierge intentionnellement

1 INTRODUCTION

DANS CE CHAPITRE :

1.1 COMMENT UTILISER CE MANUEL

Ce manuel décrit les informations nécessaires pour l'installation, le fonctionnement, l'entretien, l'entreposage, l'expédition et la mise hors service du CM6200.

La première page de chaque chapitre comprend un résumé du contenu du chapitre afin de vous aider à retrouver des informations spécifiques. Les annexes contiennent des informations supplémentaires sur le produit en tant qu'aide aux tâches d'installation, d'utilisation et d'entretien.

Veuillez lire l'ensemble du présent manuel afin de vous familiariser avec le CM6200 avant d'essayer de le paramétrer ou de l'utiliser.

1.2 ALERTES DE SÉCURITÉ

Faites attention aux alertes de sécurité imprimées dans ce manuel. Les alertes de sécurité appellent votre attention sur des situations dangereuses spécifiques que vous pourriez rencontrer en utilisant cette machine. Des exemples d'alertes de sécurité utilisées dans ce manuel sont définis ici :[1]

⚠ DANGER

Indique une situation de danger qui, si elle n'est pas évitée, ***PEUT*** provoquer la mort ou de graves blessures

1. Pour plus d'informations sur les alertes de sécurité, consultez *ANSI/NEMA Z5356-2011, Informations sur la sécurité des produits dans les Manuels des produits, les Instructions, et autres Documents accessoires*

⚠ AVERTISSEMENT

Indique une situation de danger qui, si elle n’est pas évitée, ***POURRAIT*** provoquer la mort ou de graves blessures

⚠ CAUTION

signale une situation dangereuse qui, si elle n'est pas évitée, pourrait entraîner des blessures légères ou modérées

AVIS

signale une situation dangereuse qui, si elle n'est pas évitée, pourrait entraîner des dommages matériels, des pannes d’équipement ou des résultats indésirables

1.3 CONSIGNES GÉNÉRALES DE SÉCURITÉ

CLIMAX est à la pointe de la promotion d’une utilisation sûre de machines-outils portatives. Assurer la sécurité nécessite un effort commun. En tant qu'utilisateur final, vous devez assumer votre part de responsabilité en connaissant votre environnement de travail et en appliquant, à la lettre, les procédures de fonctionnement et les consignes de sécurité figurant dans ce manuel ainsi que celles de votre employeur.

Appliquez les consignes de sécurité suivantes lorsque vous faites fonctionner ou que vous travaillez près de la machine :

Formation – Avant d'utiliser cette machine ou une autre machine-outil, vous devez recevoir une formation de la part d'un formateur qualifié. Veuillez contacter CLIMAX pour des renseignements spécifiques relatifs à la formation.

Évaluation des risques – Travailler avec la machine ou à proximité peut présenter des risques pour votre sécurité. Il vous incombe en tant qu'utilisateur final d'effectuer une évaluation des risques de chaque site de travail avant de mettre en place cette machine et de l'utiliser.

Usage prévu – Utilisez cette machine conformément aux instructions et consignes figurant dans ce manuel. N’utilisez pas cette machine de manière non conforme à son utilisation prévue décrite dans ce manuel.

Équipement de protection individuelle : portez toujours les équipements de protection individuelle adaptés quand vous utilisez cette machine-outil ou une autre. Des vêtements ignifugés à manches longues et des pantalons sont recommandés pour actionner la machine, car des projections de copeaux brûlants de la pièce usinée peuvent provoquer des brûlures ou des coupures.

Espace de travail – Maintenez l'espace de travail autour de la machine

dégagé de tout objet encombrant. Laissez les cordons et tuyaux connectés à la machine. Tenez les autres cordons et tuyaux éloignés de l'espace de travail.

Levage – De nombreux composants de la machine CLIMAX sont très lourds. Dans la mesure du possible, soulevez la machine ou ses composants à l'aide d'un équipement de levage et d'un dispositif d'arrimage appropriés. Utilisez toujours les points de levage désignés sur la machine. Suivez les instructions de levage définies dans les procédures d'installation de ce manuel.

Verrouillage/étiquetage – Verrouillez et étiquetez la machine avant de procéder à la maintenance.

Pièces mobiles - Les machines CLIMAX comportent de nombreuses pièces et interfaces mobiles exposées qui peuvent occasionner des impacts, des pincements, des coupures et d'autres blessures graves. À l'exception des commandes de fonctionnement stationnaires, évitez tout contact de vos mains ou de vos outils avec les pièces mobiles lors de l'utilisation de la machine. Enlevez les gants et attachez bien les cheveux, les vêtements, les bijoux et placez ces objets dans une poche pour éviter qu'ils puissent se prendre dans les pièces en mouvement.

Arêtes vives : les outils de coupe et les pièces à usiner ont des arêtes vives qui peuvent facilement couper la peau. Portez des gants de protection et faites preuve de prudence lorsque vous manipulez un outil de coupe ou une pièce.

Surfaces chaudes - Pendant le fonctionnement, les moteurs, les pompes, les pompes hydrauliques (HPU) et les outils de coupe peuvent générer suffisamment de chaleur pour causer des brûlures graves. Faites attention aux étiquettes d'avertissement des surfaces chaudes et évitez tout contact avec la peau nue jusqu'à ce que la machine ait refroidi.

1.4 CONSIGNES DE SÉCURITÉ SPÉCIFIQUES À LA MACHINE

Danger pour les yeux – Cette machine produit des copeaux métalliques lorsqu'elle fonctionne. Portez toujours une protection oculaire lorsque vous travaillez avec la machine.

Niveau sonore – Cette machine génère des niveaux sonores potentiellement nuisibles. Une protection auditive est requise lorsque vous utilisez cette machine ou travaillez autour de celle-ci. Pendant les essais, la machine a produit les niveaux sonores suivants [1]:

- Puissance acoustique – 74,4 dBA
- Pression acoustique ressentie par l'opérateur – 65,2 dBA
- Niveau de pression acoustique ressenti par les tiers – 65,3 dBA

1. Les essais sonores de la machine ont été réalisés conformément aux normes européennes harmonisées EN ISO 3744:2010 et EN 11201:2010

Environnements dangereux – N'utilisez pas la machine dans des environnements dans lesquels des matières explosives, des produits chimiques toxiques, ou des rayonnements peuvent être présents. N'exposez pas la machine à la pluie ou à d'autres conditions humides.

Machine tournante – Une machine tournante peut blesser gravement un opérateur. Verrouillez toutes les alimentations électriques avant d'interagir avec la machine.

Attachez les vêtements lâches et les cheveux longs– La machine rotative peut causer des blessures graves. Ne pas porter de vêtements lâches ou de bijoux. Attachez en arrière les cheveux longs ou portez un chapeau.

Flexibles, câbles suspendus, et câbles électriques– Suivez les directives suivantes :

- Ne pas malmener le câble du boitier de commande suspendu car cela peut endommager le câble et le boîtier suspendu.
- N'utilisez jamais le câble pour transporter, tirer, ou débrancher.
- Défaites tous les nœuds avant de redresser le câble.
- Tenez les câbles et les flexibles éloignés de la chaleur, de l'huile, des arêtes vives, ou des pièces en mouvement.
- Les prises doivent être adaptés à la sortie.
- Ne modifiez jamais les prises.
- N'utilisez pas d'outils électriques à la terre avec un adaptateur.
- N'exposez pas la machine à la pluie ou à des conditions humides.
- Avant de les utiliser, examinez toujours les flexibles et les câbles pour déceler tout dommage.
- Veillez à ne jamais laisser tomber un équipement électrique, cela pourrait endommager les composants.

Réglages et maintenance–Tous les réglages, opérations de lubrification et de maintenance doivent être effectués avec la machine arrêtée, et coupée de toutes sources électriques. Les soupapes d'arrêt doivent être consignées avant toute opération de maintenance.

Commandes –Les commandes de la machine sont conçues pour supporter les rigueurs d'une utilisation normale et les facteurs externes. Les interrupteurs marche/arrêt sont clairement visibles et identifiables. En cas de panne de l'alimentation en air comprimé, veillez à couper la vanne avant de quitter la machine.

1.5 ÉVALUATION DES RISQUES ET ATTÉNUATION DES DANGERS

Les machines-outils sont conçues spécifiquement pour réaliser des opérations précises d'élimination de matière.

Les machines-outils stationnaires comprennent des tours et des fraiseuses et se retrouvent généralement dans un atelier d'usinage. Elles sont placées à un endroit

fixe pendant leur fonctionnement et sont considérées comme une machine complète et autonome. Les machines-outils en poste fixe offrent la rigidité requise pour réaliser les opérations d'élimination de matière sur la structure qui fait partie intégrante de la machine-outil.

Les machines-outils portatives sont conçues pour des applications d'usinage sur site. Elles se fixent généralement directement sur la pièce à usiner, ou à une structure adjacente, et obtiennent leur rigidité de la structure à laquelle elles sont fixées. L'intention de la conception est que la machine-outil portable et la structure à laquelle elle est fixée deviennent une seule machine pendant le processus d'enlèvement de matière.

Pour atteindre les résultats désirés et assurer la sécurité, l'opérateur doit comprendre et respecter l'intention de la conception, le paramétrage, et les pratiques d'utilisation propres aux machines-outil portables.

L'opérateur doit réaliser un examen complet et une évaluation des risques sur site de l'application désirée. En raison de la nature unique des applications d'usinage portables, il est normal d'identifier un ou plusieurs risques à prendre en compte.

Lors de l'évaluation des risques sur site, il est important de prendre en compte la machine-outil portable et la pièce à usiner comme un tout.

1.6 LISTE DE CONTRÔLE DE L'ÉVALUATION DES RISQUES

La liste de contrôle suivante n'est pas conçue pour être une liste exhaustive des choses à suivre lors du paramétrage et de l'utilisation de cette machine-outil portative. Toutefois, ces listes de contrôle sont typiques des types de risques dont le monteur et l'opérateur doivent tenir compte. Utilisez cette liste de contrôle dans le cadre de votre évaluation des risques :

TABLEAU 1-1. LISTE DE CONTRÔLE DE L'ÉVALUATION DES RISQUES AVANT LA MISE EN PLACE

	Avant la mise en place
☐	J'ai pris note de tous les avertissements apposés sur la machine.
☐	J'ai éliminé ou atténué tous les risques identifiés (tels que le trébuchement, la coupure, l'écrasement, l'emmêlement, le cisaillement ou la chute d'objets).
☐	J'ai envisagé les besoins en matière de sécurité du personnel et installé toutes les protections nécessaires.
☐	J'ai lu les instructions d'installation de la machine (Section 3) et inventorié tous les éléments requis mais non fournis (Section 1.8).
☐	J'ai créé un plan de levage, comprenant l'identification de l'équipement d'arrimage approprié, pour chacune des opérations de levage requises lors de l'installation de la structure de support et de la machine.
☐	J'ai localisé les potentielles trajectoires de chute impliquées dans les opérations de levage et d'arrimage. J'ai pris des précautions pour maintenir les techniciens à l'écart des trajectoires de chute identifiées.
☐	J'ai pris en compte le mode d'utilisation de la machine et identifié le meilleur positionnement pour les commandes, le câblage, et l'opérateur.
☐	J'ai évalué et atténué tout autre risque potentiel spécifique à ma zone de travail.

TABLEAU 1-2. LISTE DE CONTRÔLE DE L'ÉVALUATION DES RISQUES APRÈS RÉGLAGE

	Après la mise en place
☐	J'ai vérifié que la machine est installée en toute sécurité (selon la Section 3) et que le trajet de chute potentielle est dégagé. Si la machine est installée en hauteur, j'ai vérifié que la machine est protégée contre les chutes.
☐	J'ai identifié tous les points de pincement possibles, tels que ceux provoqués par les pièces en rotation, et j'en ai informé le personnel concerné.
☐	J'ai prévu le confinement des copeaux produits par la machine.
☐	J'ai suivi les intervalles de maintenance requis (Section 5.1) avec les lubrifiants recommandés (Section 5.3).
☐	J'ai vérifié que tout le personnel concerné dispose des équipements de protection individuelle recommandés, ainsi que de tous les équipements requis par les réglementations, qu'elles soient du site ou autres.

TABLEAU 1-2. LISTE DE CONTRÔLE DE L'ÉVALUATION DES RISQUES APRÈS RÉGLAGE

	Après la mise en place
☐	J'ai vérifié que tous les membres du personnel concernés comprennent et se tiennent à distance de la zone de danger.
☐	J'ai évalué et atténué tout autre risque potentiel spécifique à ma zone de travail.

1.7 IDENTIFICATION DES ÉTIQUETTES

Les étiquettes d'avertissement suivantes devraient être apposées sur votre machine. Si certaines manquent ou sont abimées, contactez immédiatement CLIMAX pour les remplacer.

TABLEAU 1-3. IDENTIFICATION DES ÉTIQUETTES

	Réf. 27462 Étiquette d'avertissement de la machine en un point unique		Réf. 29152 Plaque de masse
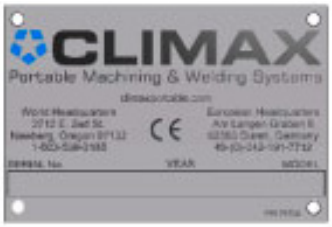	Réf 29154 Numéro de série CLIMAX, plaque signalétique avec année et numéro de modèle		
	Réf. 35772 Étiquette de direction du clapet à bille		RÉF 35828 Plaque de série année modèle

TABLEAU 1-3. IDENTIFICATION DES ÉTIQUETTES (CONTINUED)

	RÉF. 46286 Étiquette de risque d'écrasement par la fraiseuse circulaire		Réf. 46902 Avertissement concernant les surfaces chaudes
	Réf. 59035 Étiquette d'avertissement : porter une protection pour les yeux		Réf 59037 Étiquette d'avertissement : porter une protection auditive
	Réf. 59039 Étiquette d'avertissement : point de levage		Réf. 59044 Étiquette d'avertissement : lire le manuel
	P/N 62884 Etiquette de risque d'impact de la surfaceuse de brides		
			RÉF. 64156 Étiquette de position du contrepoids et du bras

TABLEAU 1-3. IDENTIFICATION DES ÉTIQUETTES (CONTINUED)

	RÉF. 69422 Étiquette d'information et de numéro de série		
	Réf. 84019 Etiquette du logo CLIMAX		
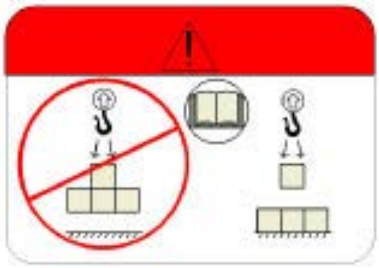	Réf. 79385 Étiquette d'avertissement : consulter le manuel pour les instructions de levage		
	Réf. 80510 Étiquette d'avertissement : risque de coupure des doigts dans la lame rotative	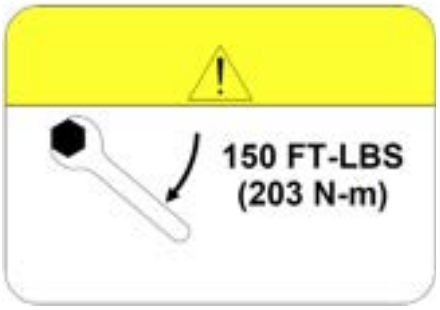	RÉF. 82157 Étiquette d'avertissement de couple
	RÉF. 82163 Étiquette d'avertissement : écrasement des mains		RÉF. 82164 Étiquette d'avertissement : écrasement du corps

TABLEAU 1-3. IDENTIFICATION DES ÉTIQUETTES (CONTINUED)

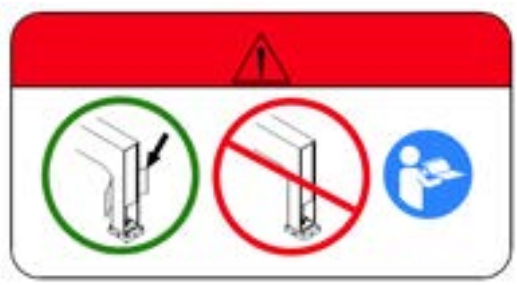	RÉF. 82172 Étiquette de placement de la protection du support DE, étiquette de danger
	RÉF. 82195 Étiquette d'avertissement électrique/de verrouillage

Pour identifier les emplacements, voir les vues éclatées en Annexe A.

1.8 ARTICLES REQUIS MAIS NON FOURNIS

- Clé dynamométrique
- Niveau
- Comparateur à cadran
- Blocs d'appui
- Plaques d'usure (plaques d'acier boulonnées, serrées ou soudées à la bride ou à l'âme d'une pièce à usiner pour monter ou sécuriser la fixation d'une machine-outil à la pièce)

2 GÉNÉRALITÉS

DANS CE CHAPITRE :

2.1 CARACTÉRISTIQUES ET OPTIONS

La CM6200 est facilement configurable avec de nombreux accessoires et options. Ce manuel couvre l'utilisation et le fonctionnement de certaines de ces options possibles. La configuration de la machine achetée peut ne pas contenir toutes les options et tous les accessoires détaillés ici. Si une application spécifique de la machine nécessite des options ou des accessoires supplémentaires, contactez un membre du service commercial de CLIMAX pour être aidé dans l'obtention des composants nécessaires.

La CM6200 est conçue pour effectuer diverses opérations d'usinage sur une pièce circulaire, telle qu'une bride. La machine se compose principalement d'une table rotative avec un roulement circulaire de précision et un entraînement servoélectrique. Un bras d'usinage réglable et un bras de contrepoids sont montés sur la table pour permettre un usinage précis dans n'importe quelle orientation. Une tête de fraisage est montée sur une glissière radiale. La CM6200 se fixe à la pièce à usiner par un système de montage sur DI ou DE.

L'application la plus courante de la CM6200 est celle des brides de raccordement des tours d'éoliennes. Elle est utilisée pour les brides de grand diamètre ayant les dimensions suivantes :

- Pour le montage sur DI, 78,9-177,2" (2 000- 4 500 mm) de diamètre intérieur (voir Figure 2-4 à la page 18)
  La plage d'usinage à montage sur DI est de 78,9-197" (2 000- 5 004 mm) avec une fraise à surfacer de 8" (203 mm).

- Pour le montage sur DE, le diamètre extérieur est de 135,5-200,4" (3 442-5 090 mm) (voir Figure 2-5 à la page 19)
  La plage d'usinage du montage sur DE est de 67,5-197" (1 715- 5 004 mm) avec une fraise à surfacer de 8" (203 mm).

- Pour le montage frontal, 67,5" (1 715 mm) ou plus (voir Figure 2-5 à la page 19)

La machine est facilement mise en place grâce à des boulons de serrage dans le diamètre intérieur de la surface de travail. La machine peut être facilement mise de niveau et centrée.

Le bras d'usinage tourne autour du roulement, ce qui permet à la tête de fraisage (ou à la meuleuse en option, ou à l'outil à point unique) de couper en douceur.

Pour les applications de fraisage (ou de meulage en option), les déplacements radial et axial peuvent être actionnés manuellement à l'aide d'un volant. La tête de fraisage peut tourner sur 360° avec une plaque pivotante en option.

2.1.1 Caractéristiques

La CM6200 comprend les caractéristiques suivantes :

Dégagement du pivot -Diamètre de 25" (635 mm) pour les grues de quai et de construction.

Système d'entraînement rotatif rigide -Le grand diamètre et le roulement préchargé assurent une rigidité optimale pendant l'usinage.

Bras de rotation et de contrepoids réglables - Le bras d'usinage et le bras de contrepoids peuvent tous deux être réglés pour obtenir le jeu d'oscillation et la plage d'usinage souhaités. Le contrepoids est recommandé, mais non requis pour les applications d'usinage horizontal.

Conception de serrage - Système de serrage rigide tubulaire avec un niveau en place et des pieds réglables conçus pour une installation simple et rapide.

Conception modulaire - Permet à beaucoup des composants de la machine d'être retirés pour faciliter l'installation et le stockage.

Commandes sur écran tactile - L'option servo est livrée complète avec les commandes du boîtier sur écran tactile.

2.1.2 Options de la machine disponibles

La CM6200 est configurable pour de nombreux besoins d'usinage spécifiques. Les options suivantes sont disponibles :

Montage sur DI -Cette machine peut être montée sur l'intérieur de la pièce à usiner à l'aide de boulons de serrage sur la surface intérieure.

Montage sur DE - Cette machine peut être montée sur le diamètre extérieur de la pièce à usiner à l'aide de notre kit de montage sur DE, en option, et de stabilisateurs ou de plaques d'usure fournis par le client.

Montage sur DI et DE - Cette machine peut être montée sur la pièce en utilisant une combinaison des machines DI et DE.

Montage frontal - Un kit de montage frontal est disponible pour permettre

de monter le mandrin directement sur la pièce à usiner ou sur un dispositif de montage fourni par le client.

Usinage en un point unique - Fournit des capacités de surfaçage de brides à des diamètres plus importants. Cette option est compatible avec toutes les options.

Equipement de meulage - Fournit des capacités de finition de surface beaucoup plus fines. Cette option est compatible avec toutes les options.

Contactez CLIMAX pour plus d'informations sur ces fonctions et options, ou si une application spécifique de la machine nécessite des options ou accessoires supplémentaires.

2.1.3 Vitesses des tables rotatives utilisant des moteurs hydrauliques lors de l'usinage en un point unique

Tableau 2-1 indique les vitesses de rotation maximales effectives pour chaque moteur hydraulique disponible lors de l'usinage en un point unique (c'est-à-dire le dressage des brides).

TABLEAU 2-1. VITESSES DE LA TABLE ROTATIVE LORS DE L'USINAGE EN UN POINT UNIQUE

Réf. du moteur	Déplacement du moteur hydraulique	Vitesse maximale[a] à 20 gpm		Vitesse maximale[b] à 10 gpm	
		60 Hz HPU	*50 Hz HPU*	*60 Hz HPU*	*50 Hz HPU*
46950	11,9 pouces^3(195,0 cm^3)	32 t/min	26 t/min	16 t/min	13 t/min
46375	14,9 pouces^3(244,2 cm^3)	25 t/min	20 t/min	13 t/min	10 t/min
46549	18,7 pouces^3(306,4 cm^3)	20 t/min	16 t/min	10 t/min	8 t/min
46550	24,0 pouces^3(393,3 cm^3)	16 t/min	13 t/min	8 t/min	6,5 t/min
48968	29,8 pouces^3(488,3 cm^3)	13 t/min	10 t/min	6 t/min	5 t/min

a.Régime maximal de la table rotative
b.Régime maximal de la table rotative

2.2 COMPOSANTS DE LA MACHINE

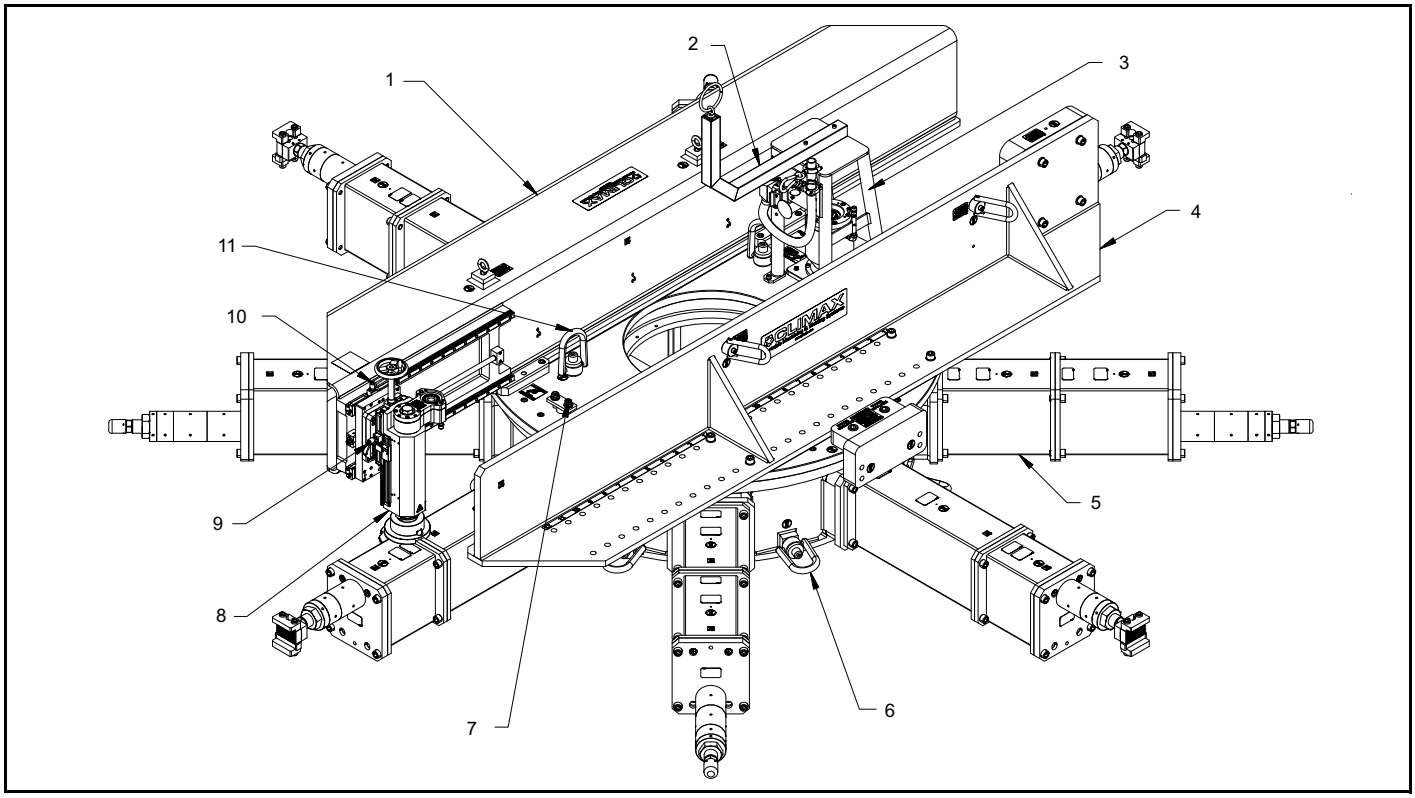

FIGURE 2-1. COMPOSANTS DE MONTAGE SUR DI

TABLEAU 2-2. IDENTIFICATION DE MONTAGE SUR DI

Numéro	Composant
1	Bras d'usinage
2	Tour de tuyaux
3	Protection de l’encodeur
4	Ensemble de contrepoids
5	Ensemble de mandrin réglable
6	Anneaux de levage
7	Frein à trainée
8	Tête de fraisage
9	Frein de déplacement axial
10	Frein de déplacement radial
11	Anneaux de levage

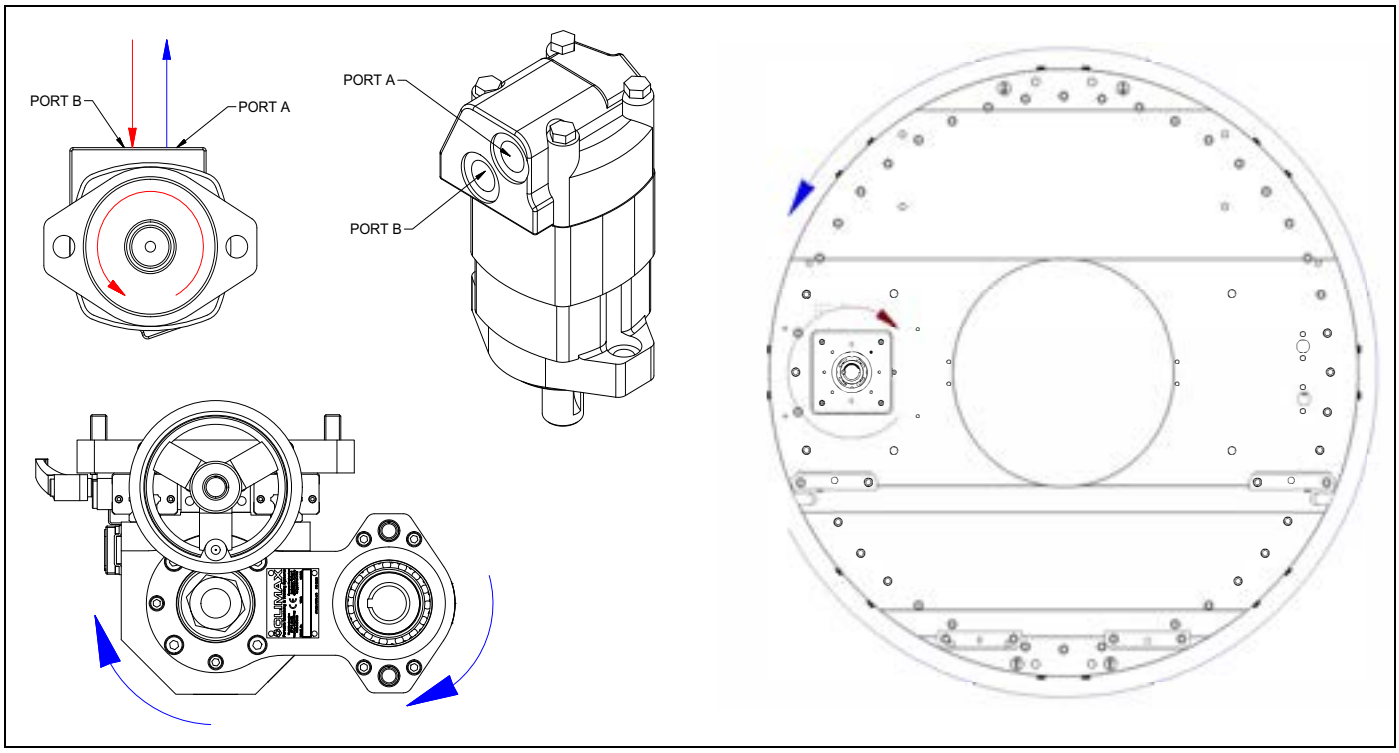

FIGURE 2-2. SENS DE ROTATION DU MOTEUR HYDRAULIQUE, DE LA TABLE ROTATIVE ET DE LA TÊTE DE FRAISAGE

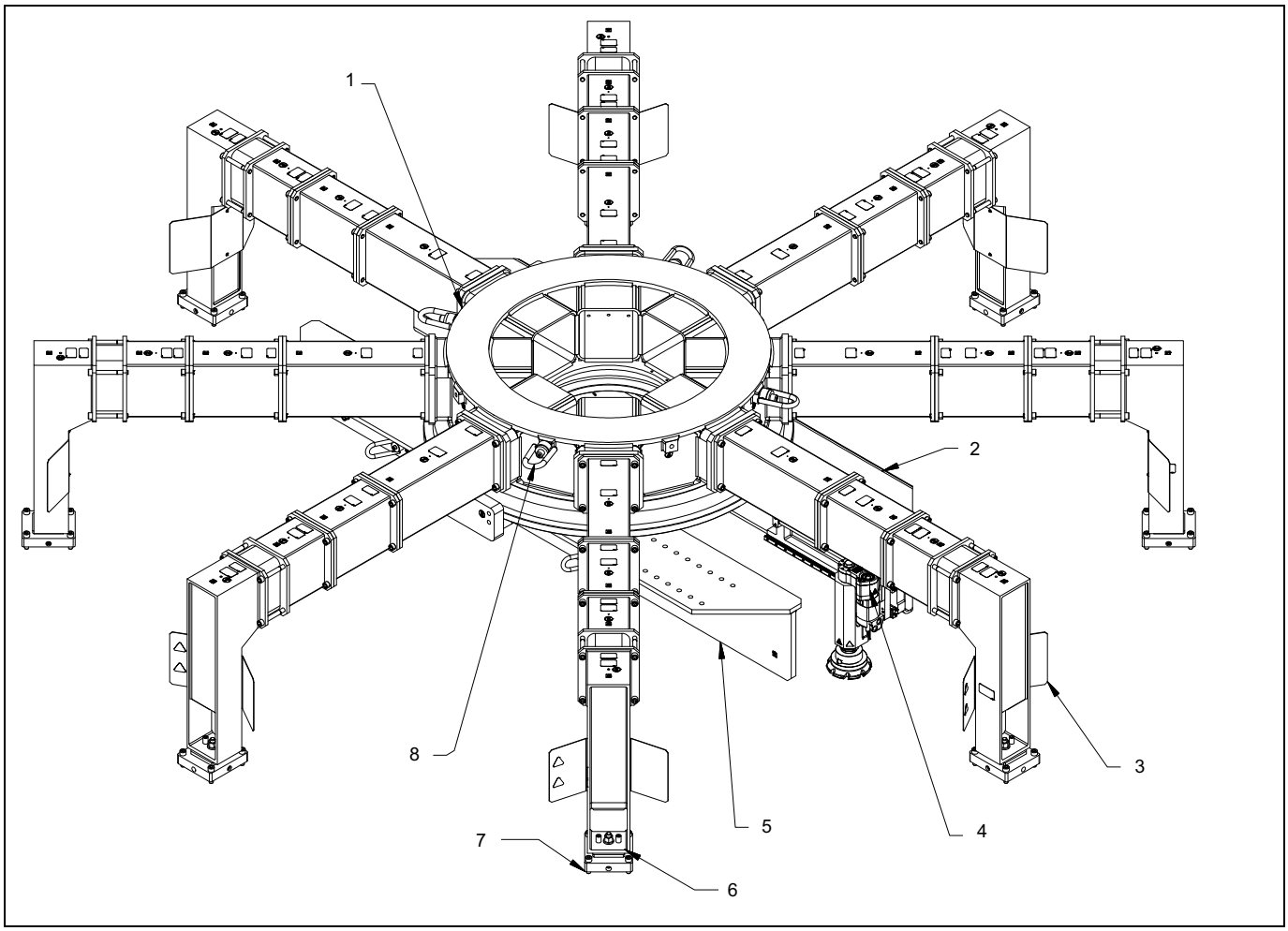

FIGURE 2-3. COMPOSANTS DE MONTAGE SUR DE

TABLEAU 2-3. IDENTIFICATION DES COMPOSANTS DE MONTAGE SUR DE

Numéro	Composant
1	Ensemble de mandrin réglable
2	Bras d'usinage
3	Bouclier de sécurité
4	Tête de fraisage
5	Ensemble de contrepoids
6	Plaque de nivellement
7	Plaque de centrage
8	Anneaux de levage

2.3 DIMENSIONS DE L'ENVELOPPE DE LA MACHINE ET DE FONCTIONNEMENT

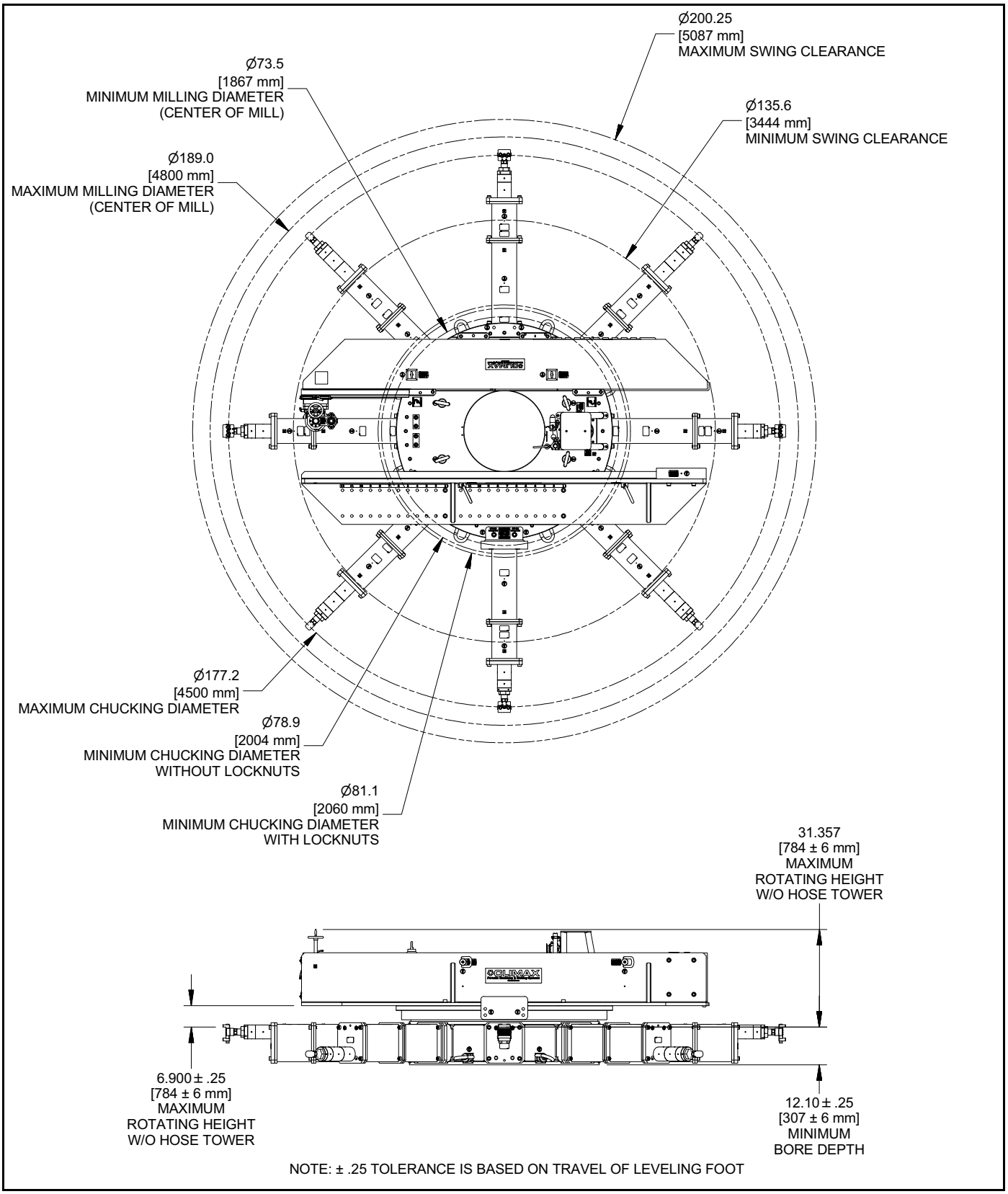

FIGURE 2-4. DIMENSIONS DE LA MACHINE À MONTAGE SUR DI

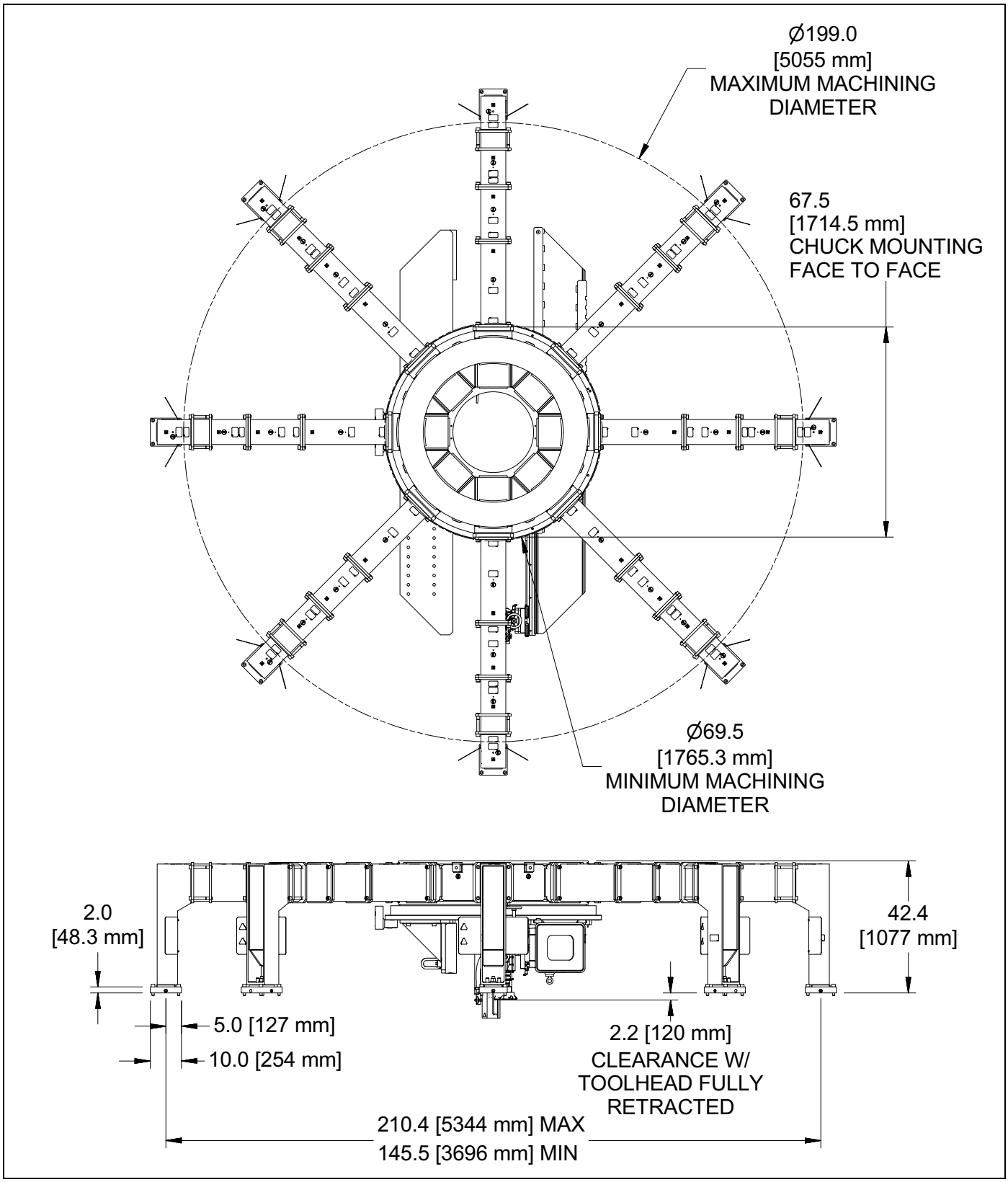

FIGURE 2-5. DIMENSIONS DE LA MACHINE À MONTAGE SUR DE

2.4 SPÉCIFICATIONS

2.4.1 Spécifications de poids

TABLEAU 2-4. POIDS DES SOUS-ENSEMBLES

Sous-ensemble	Numéro de pièce	Poids
Table rotative :	62028	3 493 livres (1584 kg)
Bras d'usinage :	72676	1 310 livres (594 kg)
Bras du contrepoids :	62031	1 590 livres (721 kg)
Section de jambes pour montage sur DI 12" :	62038	70,5 livres (32 kg)
Section de jambes pour montage sur DI 17.5" :	62038	90,4 livres (41 kg)
Section de jambes pour montage sur DI 27.5" :	62038	110 livres (50 kg)
Section de jambes pour montage sur DE 5" :	60755	25,5 livres (11,6 kg)
Section de jambes pour montage sur DE 12,5" :	57724	66,5 livres (30,2 kg)
Section de jambes pour montage sur DE 17,5" :	57851	80,3 livres (36,4 kg)
Section de jambes pour montage sur DE 27,5" :	57852	108 livres (49,0 kg)
Tête de fraisage :	72277	112 livres (55 kg)

2.4.2 Spécifications du moteur hydraulique

Voir la Figure 2-6 à la page 21 pour connaître les vitesses, pressions, et débits maximums des différents moteurs hydrauliques. Ne pas dépasser ces limites ou les limites du bloc hydraulique.

⚠ AVERTISSEMENT

Le dépassement des paramètres spécifiés du système hydraulique peut entraîner un dysfonctionnement de la machine, ce qui pourrait l'endommager ou blesser le personnel.

Specification Data — 2000 Series Motors

Displ. cm³/r [in³/r]		80 [4.9]	90 [5.5]	100 [6.2]	130 [8.0]	160 [9.6]	195 [11.9]	245 14.9]	305 [18.7]	395 [24.0]	490 [29.8]
Max. Speed (RPM) @ Flow	Continuous	908	836	742	576	477	385	308	246	191	153
	Intermittent	908	1042	924	720	713	577	462	365	287	230
Flow l/min [GPM]	Continuous	75 [20]	75 [20]	75 [20]	75 [20]	75 [20]	75 [20]	75 [20]	75 [20]	75 [20]	75 [20]
	Intermittent	75 [20]	95 [25]	95 [25]	95 [25]	115 [30]	115 [30]	115 [30]	115 [30]	115 [30]	115 [30]
Torque* Nm [lb-in]	Continuous	235 [2065]	265 [2326]	295 [2630]	385 [3420]	455 [4040]	540 [4780]	660 [5850]	765 [6750]	775 [6840]	845 [7470]
	Intermittent	345 [3035]	390 [3458]	445 [3950]	560 [4970]	570 [5040]	665 [5890]	820 [7250]	885 [7820]	925 [8170]	930 [8225]
Pressure Δ bar [Δ PSI]	Continuous	205 [3000]	205 [3000]	205 [3000]	205 [3000]	205 [3000]	205 [3000]	205 [3000]	205 [3000]	155 [2250]	120 [1750]
	Intermittent	310 [4500]	310 [4500]	310 [4500]	310 [4500]	260 [3750]	260 [3750]	260 [3750]	260 [3700]	170 [2750]	140 [2000]
	Peak	310 [4500]	310 [4500]	310 [4500]	310 [4500]	310 [4500]	310 [4500]	310 [4500]	310 [4500]	205 [3250]	170 [2500]
Weight kg [lb]	Standard or Wheel Mount	9.3 [20.5]	9.3 [20.5]	9.5 [21.0]	9.8 [21.5]	10.0 [22.0]	10.4 [23.0]	10.9 [24.0]	11.3 [25.0]	11.8 [26.0]	12.2 [27.0]
	Bearingless	7.3 [16.0]	7.3 [16.0]	7.5 [16.5]	7.7 [17.0]	7.9 [17.5]	8.4 [18.5]	8.8 [18.5]	9.3 [20.5]	9.8 [21.5]	10.2 [22.5]

Maximum Case Pressure: See case pressure seal limitation graph.
*See shaft torque ratings for limitations.

FIGURE 2-6. SPÉCIFICATIONS DU MOTEUR HYDRAULIQUE

Pour les plages de température des conditions de fonctionnement, consulter le manuel de la HPU.

Cette page est laissée vierge intentionnellement

3 INSTALLATION

DANS CE CHAPITRE :

Ce chapitre fournit des informations sur la manière de configurer la machine CM6200 concernant le diamètre intérieur (DI), le diamètre extérieur (DE), le montage inversé, le montage frontal et le montage sur contrepoids. Votre machine peut ne pas disposer de tous ces composants. Contactez CLIMAX pour obtenir une formation et des pièces supplémentaires.

3.1 Réception et inspection

Votre produit CLIMAX a été inspecté et testé avant son expédition, puis emballé pour des conditions d'expédition normales. CLIMAX ne garantit pas l'état de votre machine à la livraison. Quand vous recevez votre produit CLIMAX, effectuez les contrôles suivants:

1. Inspectez les conteneurs d'expédition pour déceler tout dommage.
2. Vérifiez le contenu des conteneurs d'expédition par rapport à la facture incluse pour vous assurer que tous les composants ont été expédiés.
3. Inspectez tous les composants afin de déceler tout dommage.

4. Lors du déballage de la machine, placez la machine sur des blocs de 102 mm (4 po) de hauteur afin d'éviter d'endommager les composants.
5. Utiliser des solvants pour retirer les revêtements de protection.

La machine est expédiée par CLIMAX avec un liner épais de LPS 3. L'agent de nettoyage recommandé est LPS PreSolve Orange Degreaser. Pendant l'utilisation de la machine, un produit anti-corrosion à long terme différent a peut-être été utilisé. Toujours utiliser un produit de nettoyage adapté au liner.

Contactez CLIMAX immédiatement pour signaler tout composant endommagé ou manquant.

3.2 PRÉPARATION DE LA MACHINE POUR SON UTILISATION

3.2.1 Vérifications préalables à l'installation

La CM6200 peut être montée et configurée de plusieurs manières. Avant de configurer la machine, vérifier les points suivants :

- Les ensembles de la machine sont correctement positionnés.
- Il y a assez de place pour positionner la machine entière sur ou à proximité de la pièce à travailler.
- Toutes les connexions sont correctement branchées.

3.2.2 Évaluation de la zone de travail

La CM6200 est souvent utilisée dans des endroits dangereux (en position surélevée, à proximité d'un autre équipement en fonctionnement, en surplomb, etc.). CLIMAX ne peut prévoir où cette machine sera utilisée. Il est par conséquent important qu'une évaluation des risques spécifique au site soit effectuée (Section 1.5 à la page 4 et Section 1.6 à la page 5) pour chaque tâche avant de commencer les travaux.

La CM6200 est doté de fonctionnalités d'opération à distance qui vous permettent de choisir l'emplacement optimal à partir duquel travailler (Section 1.6 à la page 5).

⚠ AVERTISSEMENT

Suivez toujours les pratiques de travail en sécurité, y compris les exigences en matière de sécurité spécifiques au site. Il est de votre responsabilité de procéder à une évaluation des risques avant d'installer la machine et à chaque fois que vous utilisez celle-ci.

3.3 LEVAGE ET GRÉAGE

DANGER

La CM6200 peut peser 10 000 livres (4 536 kg) lorsqu'elle est entièrement assemblée dans la configuration DI, et 12 000 livres (5 456 kg) dans la configuration DE. Faites preuve de prudence et suivez toutes les procédures d'arrimage en vigueur sur le site, telles qu'un plan de levage et n'autorisez personne à se placer sous la charge. Une chute ou un balancement incontrôlé de la machine peut provoquer des blessures graves, voire mortelles pour l'opérateur ou les personnes présentes.

La CM6200 dispose de points de levage pour les sous-ensembles individuels et pour la machine entièrement assemblée. Les points de levage sont marqués par l'étiquette illustrée à la Figure 3-1.

FIGURE 3-1. ÉTIQUETTE D'IDENTIFICATION DE L'ŒIL DE LEVAGE

CAUTION

Soulevez la machine uniquement à l'aide des anneaux de levage indiqués à la Figure 3-1.

Les sous-ensembles peuvent être désassemblés et levés individuellement à l'aide des anneaux de levage étiquetés présents sur chaque sous-ensemble.

DANGER

Ne soulevez pas la machine assemblée par les anneaux de levage du contrepoids ou du bras d'usinage ! Soulevez la machine assemblée uniquement au moyen des quatre anneaux de levage illustrés à la Figure 3-2 et à la Figure 3-3. Le fait de soulever la machine assemblée par d'autres points de levage peut provoquer sa chute. Une chute de la machine peut causer des blessures graves, voire mortelles.

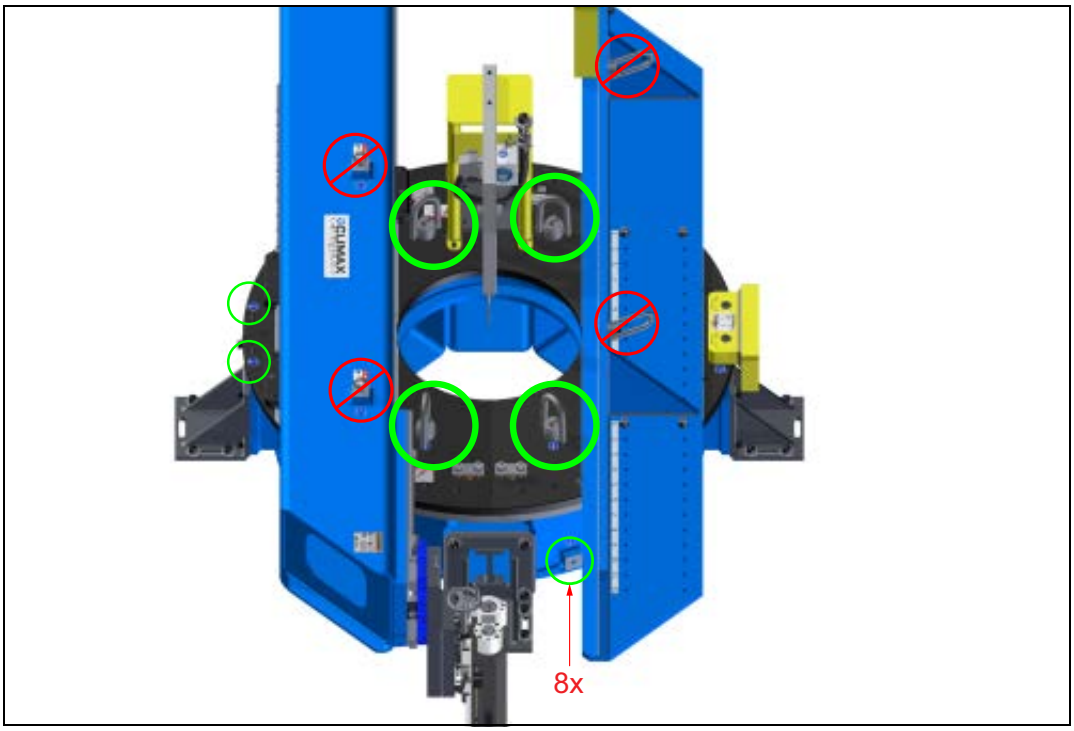

FIGURE 3-2. ANNEAUX DE LEVAGE POUR LE LEVAGE DE LA MACHINE ASSEMBLÉE

Il y a quatre emplacements d'anneaux de levage sur le dessus de la table rotative (Figure 3-2 à la page 24) et huit emplacements d'anneaux de levage sur les côtés du moyeu (un illustré à la Figure 3-3). En fonction de l'orientation de l'application, fixez les anneaux de levage fournis aux emplacements nécessaires.

FIGURE 3-3. ANNEAUX DE LEVAGE POUR SOULEVER LA MACHINE ASSEMBLÉE EN POSITION VERTICALE

Lors du levage de la machine, portez une attention particulière à l'emplacement du centre de gravité. Vérifiez toujours que toutes les pièces de la machine sont bien fixées afin d’éviter tous dangers.

Arrimage vertical

L'ensemble de levage, tel qu'illustré à la Figure 3-4, permet de suspendre la machine au niveau du mandrin DI, ou de la suspendre au niveau du mandrin DE.

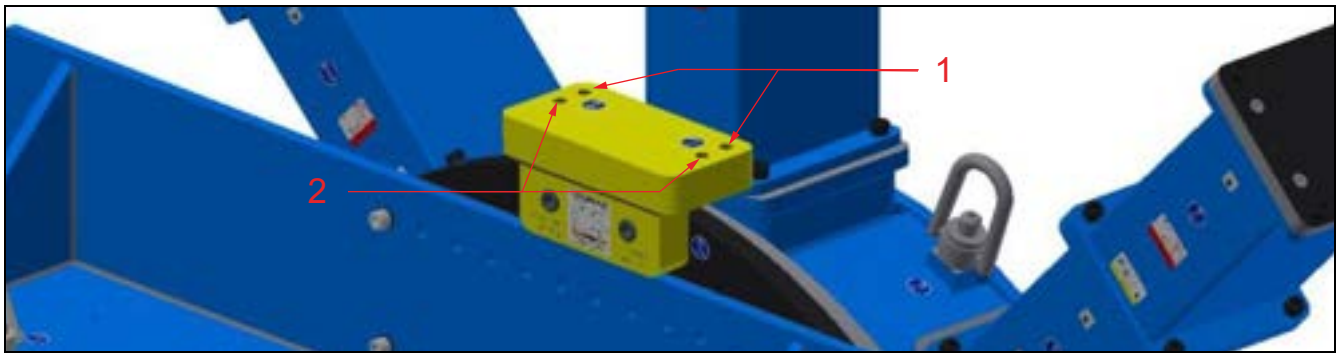

FIGURE 3-4. LEVAGE DE L'ENSEMBLE SUR LA MACHINE

TABLEAU 3-1. IDENTIFICATION DE L'ENSEMBLE DE LEVAGE

Numéro	Composant
1	Position A
2	Position B

Installez les anneaux de levage en position A pour un montage sur DI ou en position B pour un montage sur DE.

Notez que seuls deux de ces trous sont nécessaires pour soulever la machine avec les anneaux de levage installés. Les trous sont espacés pour dégager les jambes de montage.

L'ensemble de levage doit être serré au couple de 230 ft-lbs (310 Nm).

3.4 RISQUES INHÉRENTS À L'INSTALLATION

La phase d'installation peut s'avérer dangereuse car elle dépend du respect par l'opérateur et les autres personnes des précautions de sécurité recommandées. Tenez compte des avertissements suivants avant de commencer le processus d'assemblage.

⚠ AVERTISSEMENT

Les machines qui se balancent ou tombent risquent de blesser gravement ou de tuer le personnel qui se trouve à proximité de la machine. Sécurisez tous les composants sur la machine avant de les soulever. Des blessures graves ou mortelles peuvent résulter de mauvaises méthodes de levage.

⚠ AVERTISSEMENT

En cas de fixation incorrecte, cette machine peut tomber et causer des blessures mortelles au personnel. Prêtez une attention particulière aux installations à brides verticales.
• Les pieds de serrage doivent être fixés à la pièce à travailler.
• Les doigts de réglage et les plaques de soudure de sécurité doivent, dès que possible, être utilisés.

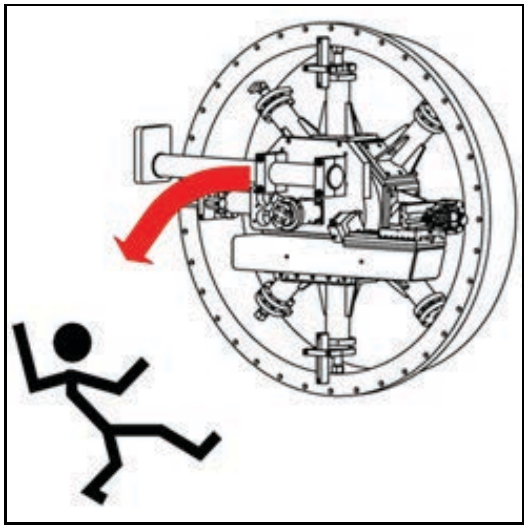

FIGURE 3-5. RISQUE D'UNE INSTALLATION VERTICALE

Pour éviter le risque de chute de la machine, sécurisez-la en soudant les blocs de sécurité sur les mâchoires supérieures ou en utilisant des pinces boulonnées à la face inférieure des pieds du mandrin de nivellement (blocs de sécurité et pinces non inclus dans la machine).

⚠ AVERTISSEMENT

Ne retirez pas la grue tant qu'au moins une des méthodes de fixation n'est pas en place et que les vis de levage des pieds du mandrin ne sont pas serrées au couple de 325 ft-lb (441 Nm).

AVIS

Si la valeur de couple ne peut être atteinte sans déformation acceptable de la pièce, l'opérateur doit appliquer ses propres dispositifs secondaires de support et de retenue.

⚠ AVERTISSEMENT

Assurez-vous de ne pas étendre les vis de levage des pieds du mandrin au-delà de la rainure d'extension maximale dans la vis filetée. Si nécessaire, ajoutez des sections de jambe supplémentaires afin de réduire la longueur de la vis de levage filetée exposée.

3.5 INSTALLATION DE LA MACHINE SUR LA PIÈCE À USINER

3.5.1 Généralités sur CM6200l'installation de la fraiseuse circulaire

Inspectez et effectuez les travaux de maintenance nécessaires sur la machine avant de la monter sur une pièce à travailler. Les étapes suivantes donnent un aperçu des processus liés à la configuration de la CM6200 pour un montage sur DI. La configuration d'un montage sur DE est décrite à la Section 3.5.3 à la page 33.

Procédez comme suit pour monter la machine sur la pièce à travailler :

1. Vérifiez que les sources d'alimentation sont débranchées.
2. Mesurez la surface sur laquelle effectuer le montage et sélectionnez les pièces appropriées pour l'usinage, en fixant des plaques de jonction (fournies par le client) ou autres surfaces de montage, si nécessaire (Figure 3-6).

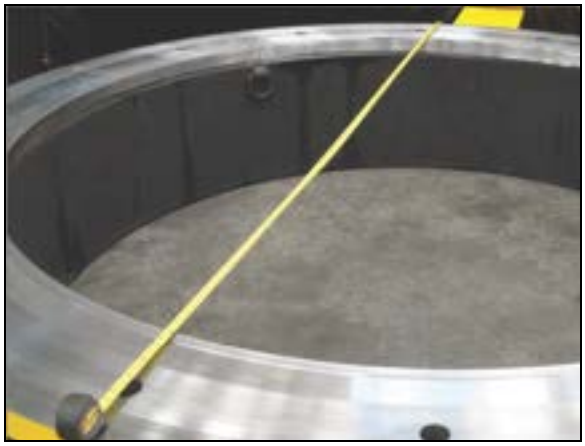

FIGURE 3-6. MESURER LA PIÈCE À USINER

3. Avant d'insérer la fraiseuse circulaire dans la pièce à usiner, assurez-vous que les pieds sont bien fixés à la machine.
   a) Pour un montage sur DI : Confirmez que les pieds de montage pour DI sont réglés à un diamètre inférieur au diamètre de montage interne.
   b) Pour un montage sur DE : Confirmez que les pieds de montage pour DE sont réglés à un diamètre supérieur au diamètre de la bride (Figure 3-7). Consultez la Section 3.5.2 à la page 29 et laSection 3.5.3 à la page 33 pour la procédure complète d'installation de la jambe de mandrin.

FIGURE 3-7. MESURE DE LA JAMBE

AVIS

Si vous montez la CM6200 en position verticale, le bras d'usinage et le contrepoids doivent être fixés à la table rotative (step 5) avant de monter la machine sur la pièce à usiner (step 8), afin de réduire la possibilité d'un changement de rotation involontaire au cours du processus d'installation.

4. Positionnez le contrepoids et le bras d'usinage dans des fentes positionnées à égale distance du centre de la machine, affichant le même numéro d'emplacement, afin d'équilibrer la machine.
5. Fixez le bras d'usinage et le contrepoids à la table rotative. Consultez la Section 3.6 à la page 35 et la Section 3.7 à la page 40 pour connaître les valeurs de couple spécifiques.
6. Fixez les élingues de grue aux points de levage sur la table rotative.

⚠ AVERTISSEMENT

Utilisez uniquement des élingues individuelles pour chaque anneau de levage et assurez-vous qu'elles sont de longueur appropriée et égale, et qu'elles sont adaptées au poids de la machine et à l'angle de l'élingue.

7. Soulevez la machine lentement et avec précaution. Si elle n'est pas équilibrée, descendez la machine au sol. Appliquez les ajustements nécessaires avant de tenter à nouveau la manœuvre de levage et de déplacement.
8. Montez la machine sur la pièce à travailler à l'aide des pattes de réglage (Figure 3-8).
9. Connectez les câbles des commandes éventuellement nécessaires (selon la configuration).
10. Vérifiez que la machine est centrée et de niveau avant d'effectuer toute opération d'usinage.

FIGURE 3-8. PATTE DE RÉGLAGE

Levage horizontal à vertical

Lorsque vous soulevez la CM6200 de la position horizontale à la position verticale, assurez-vous que l'ensemble de levage à charge contrôlée (Figure 3-9) est

correctement installé sur la machine, comme décrit dans la Section 3.8.3 à la page 43 et la Section 3.8.4 à la page 44.

Ce dispositif de levage maintiendra la machine stable et perpendiculaire, ce qui rendra plus sûr et plus facile le levage vertical de la machine.

FIGURE 3-9. ENSEMBLE DE LEVAGE À CHARGE CONTRÔLÉE RÉF. 68425

3.5.2 Ensemble de jambes pour montage sur DI

Les éléments présentés en surbrillance dans la Figure 3-10 sont filetés à triple fil 4"-4UN.

Les mâchoires de nivellement des pieds du mandrin comprennent des pinces pour brides internes jusqu'à 8" (210 mm).

TABLEAU 3-2. IDENTIFICATION DE L'ÉCROU DE BLOCAGE ET MÂCHOIRE DE NIVELLEMENT

Numéro	Composant
1	Ecrou de blocage interne
2	Mâchoire de nivellement

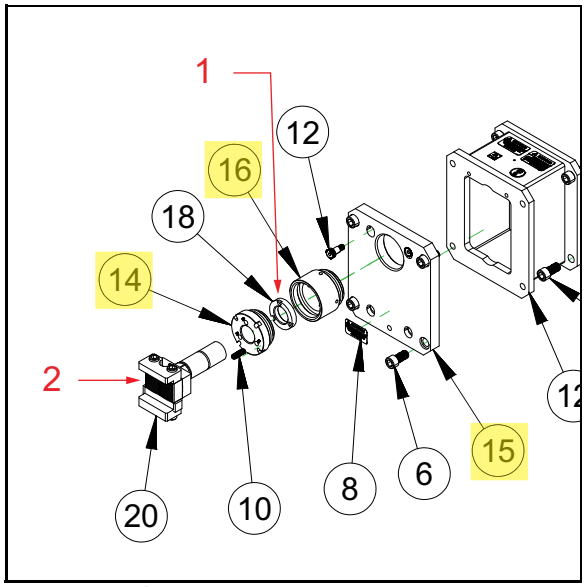

FIGURE 3-10. ÉCROU DE BLOCAGE ET MÂCHOIRE DE NIVELLEMENT

Sur le capuchon d'extrémité, les symboles de verrouillage en surbrillance correspondent au système de verrouillage de la vis de levage (voir Figure 3-11).

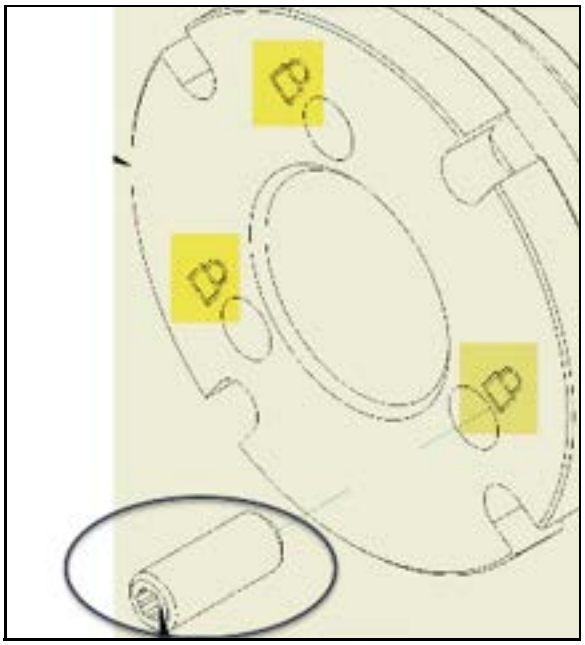

FIGURE 3-11. SYMBOLES DE VERROUILLAGE SUR L'EMBOUT

AVIS

Une fois les derniers réglages effectués sur les pieds du mandrin, serrez l'une des trois vis de réglage à tête creuse (Réf. 74499) M12 x 40 mm de long à un couple de 29 pi-lb (40 Nm) (illustrée entourée dans la Figure 3-11) pour verrouiller la position de la vis de levage. Desserrez cette vis avant d'effectuer des réglages de levage supplémentaires ou de retirer la machine de la bride.

AVIS

Les pieds du mandrin alterneront montée et descente autour du moyeu pour un double plan. Pour un plan simple, les vis de levage seront normalement toutes montées en hauteur.

⚠ AVERTISSEMENT

Utilisez un équipement d'arrimage supplémentaire tel que des pattes de réglage lors du montage de la machine, en cas de chute à l'extérieur ou au travers du diamètre de serrage.

La table rotative peut être installée en configuration DI ou DE (en option). La configuration DI permet le montage interne sur une bride. Une configuration DE permet de fixer la machine à l'extérieur d'une bride. Consultez la Section 4.5.1 à la page 84.

La configuration à double plan dans la configuration DI utilise des jambes alternantes de sorte que les jambes de nivellement sont plus hautes que les jambes fixes. Cette disposition peut apporter une stabilité supplémentaire à la machine, en fonction de la nature de la pièce à usiner.

AVIS

Si la pièce à usiner ne permet pas la configuration à double plan, il faut alors utiliser d'autres méthodes pour augmenter la stabilité de la machine. Consultez la Section 3.5.3 à la page 33 pour connaître les méthodes de fixation.

Procédez comme suit pour installer les pieds de montage de la table rotative :

1. Mesurez l'alésage de la pièce.
2. Sélectionnez les pièces appropriées pour l'assemblage.
3. Appliquez un anti-grippant (fourni dans la trousse à outils) aux endroits suivants :
   - Les filets et les faces en contact de chaque section de rallonge de la jambe du mandrin, comme indiqué à la Figure 3-12.

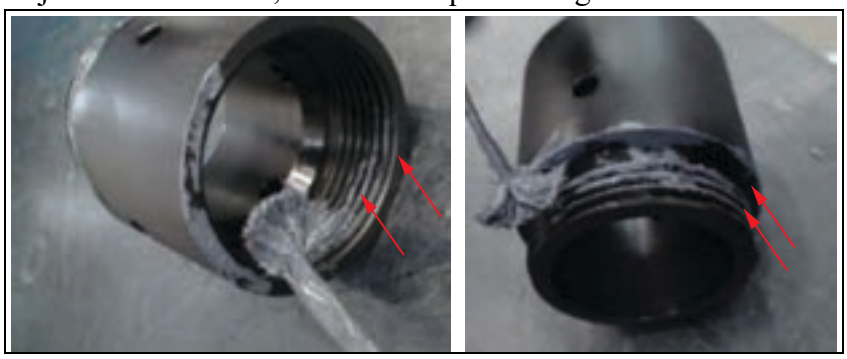

FIGURE 3-12. ENDROITS OÙ APPLIQUER DE L'ANTI-GRIPPANT

   - Le filetage des vis de levage afin d'éviter les grippages (Figure 3-13.)

FIGURE 3-13. VIS DE LEVAGE

4. Reportez-vous aux vues éclatées Figure A-7 à la page 126, Figure A-8 à la page 127 et Figure A-9 à la page 128, Tableau 3-5 à la page 33 et Tableau 3-6 à la page 34 lors de l'assemblage des jambes du mandrin.
5. Les jambes du mandrin alterneront montée et descente autour du moyeu. Fixez les bras du mandrin au moyeu avec les boulons fournis.
6. Après avoir fixé l'embout à la jambe d'extension du mandrin, installez les ensembles de pieds de nivellement et fixes du mandrin. Les pieds de nivellement du mandrin doivent être montés sur les quatre embouts supérieurs de la jambe. Les pieds fixes du mandrin doivent être montés sur les embouts des jambes inférieures.
7. Fixez les bras du mandrin au moyeu avec les boulons fournis.

8. Après avoir fixé l'embout à la jambe d'extension du mandrin, installez les ensembles de pieds de nivellement du mandrin.

⚠ CAUTION

La vis de levage doit être insérée de manière à ce que la rainure d'extension complète soit à l'intérieur de l'embout.

N'étendez pas les pieds de levage au-delà de la rainure d'extension complète de la vis filetée (Figure 3-14), car cela pourrait surcharger la vis de levage et l'endommager.

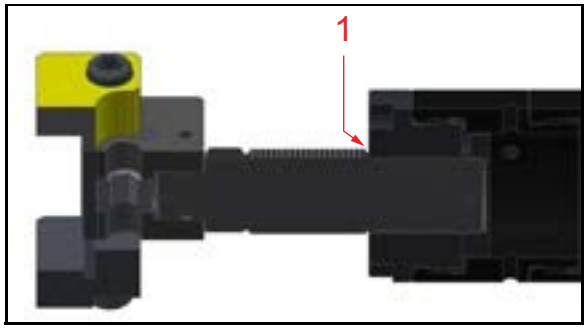

FIGURE 3-14. RAINURE DE LA VIS DE LEVAGE (PIED DE NIVELLEMENT)

Si nécessaire, ajoutez des sections de jambe supplémentaires afin de réduire la longueur de la vis de levage filetée exposée.

TABLEAU 3-3. IDENTIFICATION DE LA RAINURE DE LA VIS DE LEVAGE

Numéro	Composant
1	Rainure de vis de levage

9. Ajustez les boulons de levage de manière égale jusqu'à ce qu'elles soient d'environ 10 mm (3/8 po) inférieures au diamètre intérieur de la pièce.

TABLEAU 3-4. IDENTIFICATION DU PIED DE VÉRIN FIXE

Numéro	Composant
1	Tampon accrocheur
2	Boulon de levage

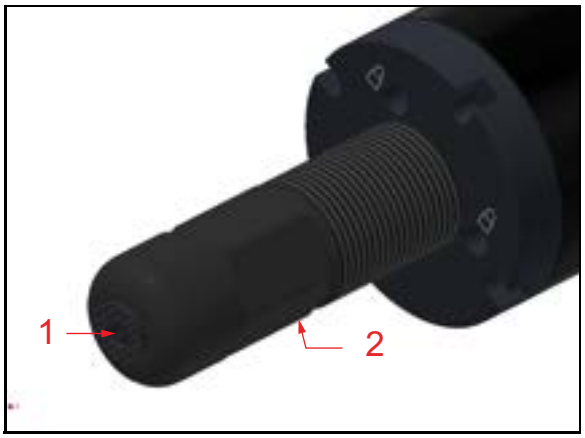

FIGURE 3-15. PIED DE VÉRIN FIXE

10. Installez les pattes de réglage sur les blocs de nivellement. Ajustez les pattes afin qu'elles reposent sur la bride de la pièce.

⚠ CAUTION

Avant de placer le mandrin sur la pièce, vérifiez que les vis de levage sont rétractées de façon à peu près égale et équipées des pattes de réglage.

TABLEAU 3-5. SPÉCIFICATIONS D'INSTALLATION DI DE LA JAMBE DE SERRAGE

Plage	Diamètre intérieur de la pièce à usiner	Écarte-ment de 12,5" (318 mm)	17,5" Écarte-ment (445 mm)	Écarte-ment de 27,5" (699 mm)	2,5" Jambe (64 mm)	5" (127 mm) jambe
1	78,9–83,9" (2 004–2 131 mm)[a]	0	0	0	0	0
2	83,9–88,9" (2 131–2 285 mm)	0	0	0	1	0
3	88,9–93,9" (2 285–2 385 mm)	0	0	0	0	1
4	93,9–98,9" (2 385–2 512 mm)	0	0	0	1	1
5	98,9–103,9" (2 512–2 639 mm)	0	0	0	0	2[b]
6	103,9–108,9" (2 639–2 766 mm)	1	0	0	0	0
7	108,9–113,9" (2 766–2 893 mm)	1	0	0	1	0
8	113,9–118,9" (2 893–3 020 mm)	0	1	0	0	0
9	118,9–123,9" (3 020–3 147 mm)	0	1	0	1	0
10	123,9–128,9" (3 147–3 274 mm)	0	1	0	0	1
11	128,9–133,9" (3 274–3 401 mm)	0	1	0	1	1
12	133,9–138,9" (3 401–3 528 mm)	0	0	1	0	0
13	138,9–143,9" (3 528–3 655 mm)	1	1	0	0	0
14	143,9–148,9" (3 655–3 782 mm)	1	1	0	1	0
15	148,9–153,9" (3 782–3 909 mm)	1	1	0	0	1
16	153,9–58,9" (3 909–4 036 mm)	1	1	0	1	1
17	158,9–163,9" (4 036–4 163 mm)	1	0	1	0	0
18	163,9–168,9" (4 163–4 290 mm)	1	0	1	1	0
19	168,9–173,9" (4 290–4 417 mm)	1	0	1	0	1
20	173,9–178,9" (4 417–4 544 mm)	1	0	1	1	1
21	178,9–183,9" (4 544–4 671 mm)	0	1	1	0	1

a. Ne pas utiliser l'écrou de blocage interne.
b. Il y a douze jambes de 5" dans la nomenclature. Lorsque deux jambes de 5" par ensemble de jambes sont nécessaires (16 au total), vissez deux jambes de 2,5" ensemble pour créer les quatre jambes supplémentaires de 5".

3.5.3 Ensemble de jambes pour montage sur DE

Suivez les étapes suivantes pour monter l'ensemble de jambes DE :

1. Identifiez la longueur nécessaire des sections de jambes de montage sur le DE en fonction des mesures du diamètre extérieur de la pièce et des configurations du DE dans le Tableau 3-6 à la page 34.
2. Assemblez les jambes de montage DE (Figure 3-16) selon la vue éclatée de la Figure A-10 à la page 129.

FIGURE 3-16. ENSEMBLE DE JAMBES POUR MONTAGE SUR DE

3. Fixez la plaque de centrage aux extrémités de chaque jambe de montage sur DE (Figure 3-17).

AVIS

Dans le Tableau 3-6, les quatre premières rangées en surbrillance en gris foncé ne sont pas pratiques en raison de la longueur minimale de l'oscillation du bras. Voir la Figure 3-18 à la page 35.

FIGURE 3-17. PLAQUE DE CENTRAGE DE MONTAGE SUR DE

TABLEAU 3-6. TABLEAU DE CONFIGURATION DES JAMBES DE SERRAGE DE

Diamètre				Écartement de 12,5" (318 mm)	17,5" Écartement (445 mm)	Écartement de 27,5" (699 mm)	5" (127 mm) jambe
Plage	A[a]	B[b]	C[c]				
1	92,5" (2 350 mm)	102,38" (2 600 mm)	110.4" (2 804 mm)	1	0	0	0
2	102,5” (2 604 mm)	112,38" (2 854 mm)	120,4" (3 058 mm)	0	1	0	0
3	112,5" (2 858 mm)	122,38" (3 108 mm)	130,4" (3 312 mm)	0	1	0	1

TABLEAU 3-6. TABLEAU DE CONFIGURATION DES JAMBES DE SERRAGE DE (CONTINUED)

Diamètre				Écarte-ment de 12,5" (318 mm)	17,5" Écarte-ment (445 mm)	Écarte-ment de 27,5" (699 mm)	5" (127 mm) jambe
Plage	A[a]	B[b]	C[c]				
4	122,5" (3 112 mm)	132,38" (3 362 mm)	140,4" (3 566 mm)	0	0	1	0
5	127,5" (3 239 mm)	137,38" (3 489 mm)	145,4" (3 693 mm)	1	1	0	0
6	137,5" (3 493 mm)	147,38" (3 743 mm)	155,4" (3 947 mm)	1	1	0	1
7	147,5" (3 747 mm)	157,38" (3 997 mm)	165,4" (4 201 mm)	1	0	1	0
8	157,5" (4 001 mm)	167,38" (4 251 mm)	175,4" (4 455 mm)	1	0	1	1
9	167,5" (4 255 mm)	177,38" (4 505 mm)	185,4" (4 709 mm)	0	1	1	1
10	182,5" (4 636 mm)	192,38" (4 886 mm)	200,4" (5 090 mm)	1	1	1	0
11	192,5" (4 890 mm)	202,38" (5 140 mm)	210,4" (5 344 mm)	1	1	1	1

a. A est mesuré de la face de montage à la face de montage des supports verticaux.
b. B est le dégagement d'oscillation à l'intérieur des supports verticaux du bras d'usinage.
c. C est mesuré du centre de la plaque de montage au centre de la plaque de montage.

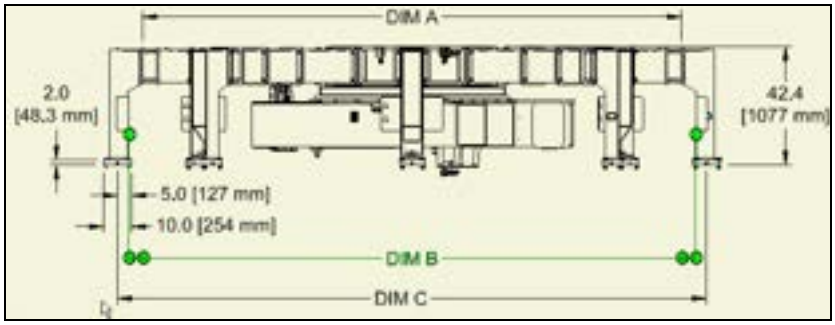

FIGURE 3-18. DIMENSIONS DE LA JAMBE DE SERRAGE DE

3.6 MONTAGE DU BRAS D'USINAGE

3.6.1 Montage du bras d'usinage sur la table rotative

Une fois les jambes du mandrin correctement configurées et assemblées sur le moyeu du mandrin, le bras d'usinage doit être monté sur la machine.

AVIS

Si la machine doit être montée en position verticale, cette étape doit être réalisée avant le montage de la machine.

Le bras d'usinage peut être monté en position horizontale après le montage du mandrin sur la pièce, mais le bras d'usinage doit être monté en premier.

Le bras d'usinage CM6200 est fixé à la table rotative à l'aide de pinces. Deux des pinces (les plus proches du trou central de la table) se fixent directement sur le plateau de la table rotative CM6200 et n'ont pas besoin d'être retirées.

Procédez comme suit pour monter le bras d'usinage sur la table rotative :

1. Maintenez le bras d'usinage de niveau et à plat lors du levage en utilisant deux des anneaux de levage montés sur le dessus du bras d'usinage.
2. Positionnez le bras d'usinage contre les deux pinces fixes.

AVIS

La surface de montage du bras d'usinage, à l'opposé de la tête de fraisage, est entaillée pour permettre l'accès de la pince de sécurité. Assurez-vous que les encoches s'adaptent à la goupille de sécurité de l'étau.

3. Installez les deux autres pinces et posez les vis 5/8-SHCS pour fixer les pinces.

⚠ AVERTISSEMENT

Serrez les boulons de fixation à 110 pi-lb (150 Nm) pour éviter tout mouvement inattendu pouvant causer des blessures graves, voire mortelles.

ASTUCE :

La goupille de sélection n'a pas besoin d'être enclenchée dans une encoche après le réglage du bras pivotant. Elle sert uniquement à limiter la course maximale du bras pivotant au cas où celui-ci se desserrerait en cours de fonctionnement.

⚠ AVERTISSEMENT

Ne désactivez pas la goupille d'arrêt de sécurité. La goupille d’arrêt de sécurité est conçue pour éviter tout déplacement indésirable du bras d’usinage, qui pourrait entraîner des blessures graves, voire mortelles.

3.6.2 Repositionnement du bras d'usinage

Le bras d'usinage est réglable de façon extrêmement précise pour permettre un positionnement polyvalent et éliminer les obstructions.

Procédez comme suit pour repositionner le bras d'usinage :

1. Desserrez les vis qui retiennent les quatre colliers.
2. Maintenez la goupille d'arrêt de sécurité ouverte (Figure 3-19).
3. Faites glisser le bras jusqu'à la position nécessaire.
4. Relâchez la goupille d'arrêt de sécurité.
5. Resserrez les pinces.

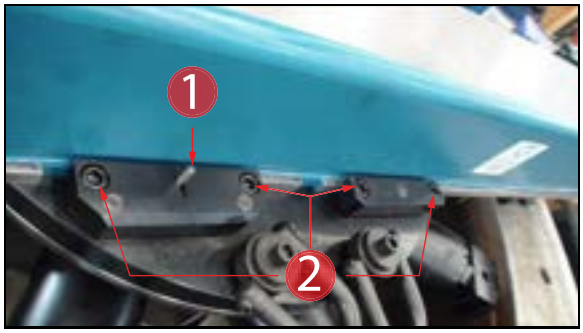

FIGURE 3-19. VIS DE SERRAGE ET GOUPILLE D'ARRÊT

TABLEAU 3-7. IDENTIFICATION DES VIS DE SERRAGE ET DE LA GOUPILLE D'ARRÊT

Numéro	Composant
1	Goupille d'arrêt
2	Vis de serrage

⚠ CAUTION

Après avoir ajusté le bras d'usinage, vérifiez que le contrepoids est réglé sur l'incrément d'emplacement de boulon correspondant.
Pour un usinage précis et pour ne pas endommager la machine, le contrepoids et le bras d'usinage doivent toujours être à égale distance du centre de la machine.

Le contrepoids et le bras d'usinage présentent des incréments numérotés le long des surfaces de montage. Chaque fente numérotée du bras d'usinage coïncide avec une position de boulon numérotée sur le bras du contrepoids. Veillez à déplacer le contrepoids d'un espace de boulon pour chaque fente dont vous déplacez le bras d'usinage.

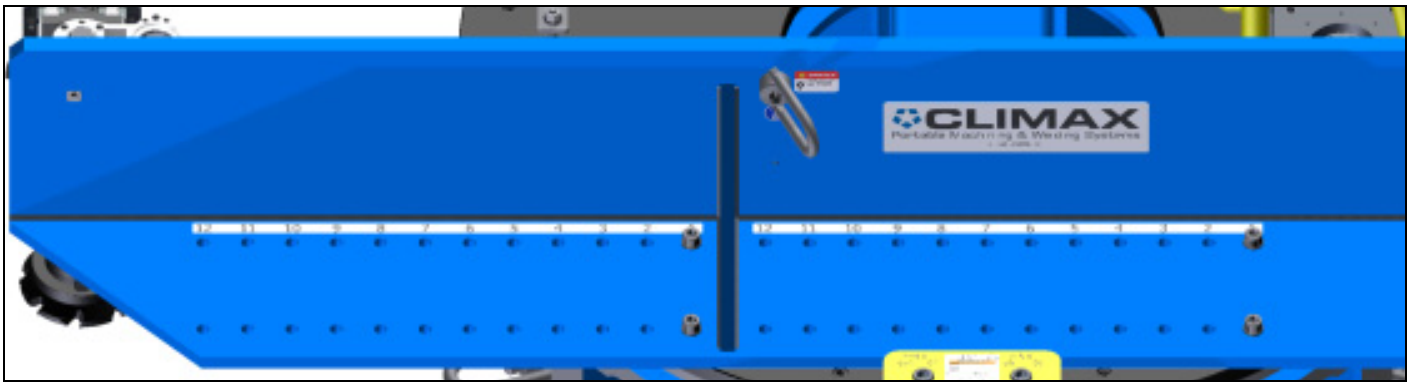

FIGURE 3-20. CONTREPOIDS

FIGURE 3-21. BRAS D'USINAGE

La tête de fraisage a une course de 24" (609,6 mm) le long du bras d'usinage.

Pour régler la machine pour une plage de fraisage, utilisez le minimum et le maximum de votre surface pour déterminer les réglages du bras d'usinage et du contrepoids, comme indiqué dans le Tableau 3-8.

TABLEAU 3-8. POSITION DU BRAS D'USINAGE ET DU CONTREPOIDS

Position	Plage de surface en pouces (mm)
1	123–73,5" (3,124.2–1 866,9 mm)
2	129–79,5" (3 276,6–2 019,3 mm)
3	135–85,5" (3 429,0–2 171,7 mm)
4	141–91,5" (3 581,4–2 324,1 mm)
5	147–97,5" (3 733,8–2 476,5 mm)
6	153–103,5" (3 886,2–2 628,9 mm)
7	159–109,5" (4 038,6–2 781,3 mm)
8	165–115,5" (4 191,0–2 933,7 mm)
9	171–121,5" (4 343,4–3 073,4 mm)
10	177–127,5" (4 495,8–3 238,5 mm)
11	183–133,5" (4 648,2–3 390,9 mm)
12	189–149,5" (4 800,6–3 797,3 mm)

3.6.3 Configuration du fraisage, meulage ou en point unique

Voir la Section 4.4 à la page 81 pour la configuration du meulage.

Voir la Section 4.5 à la page 82 pour la configuration en point unique.

Pour le fraisage, la tête de fraisage se monte sur la CM6200 à l'aide d'une plaque d'adaptation..

Les types de trous de boulon dans la plaque d'adaptation permettent de placer l'ensemble de la tête de fraisage par incréments de 180°.

Avant de soulever l'ensemble de la tête de fraisage, déterminez quel alignement est nécessaire pour les opérations d'usinage.

Procédez comme suit pour installer la tête de fraisage :

1. Levez la plaque de l'adaptateur en place et alignez-la.
2. Montez l'adaptateur sur le chariot radial à glissière et boulonnez-le en bonne position.
3. Alignez la plaque de la tête de fraisage sur les goupilles de positionnement de la plaque d'adaptation.
4. Retirez tous les outils et le matériel de levage ou de montage.
5. Vérifiez que toutes les attaches sont bien serrées.

FIGURE 3-22. INSTALLATION DE LA TÊTE DE FRAISAGE

3.7 POSITIONNEMENT DU CONTREPOIDS

Une fois les jambes du mandrin correctement configurées et assemblées sur le moyeu du mandrin, le contrepoids doit être monté sur la machine.

AVIS

Le contrepoids doit être installé lorsque la machine est utilisée dans une application d'usinage vertical. CLIMAX vous recommande de toujours utiliser le contrepoids, car il améliore les performances de la machine et permet de produire une surface plus plane.

Le bras d'usinage peut être monté en position horizontale après le montage du mandrin sur la pièce, mais le bras d'usinage doit être monté en premier.

Le contrepoids sert à réduire la charge sur le moteur du servomoteur et à protéger le système d'entraînement contre toute force excessive. Le contrepoids assure également la stabilité de la machine, ce qui permet d'obtenir des tolérances d'usinage plus précises.

Le contrepoids a plusieurs réglages et peut être positionné en le faisant glisser radialement jusqu'à la position suivante du trou de boulon (Figure 3-23). Suivez les paramètres du Tableau 3-8 à la page 39 pour positionner le bras d'usinage et le

contrepoids dans la position nécessaire pour la plage correcte de l'opération d'usinage.

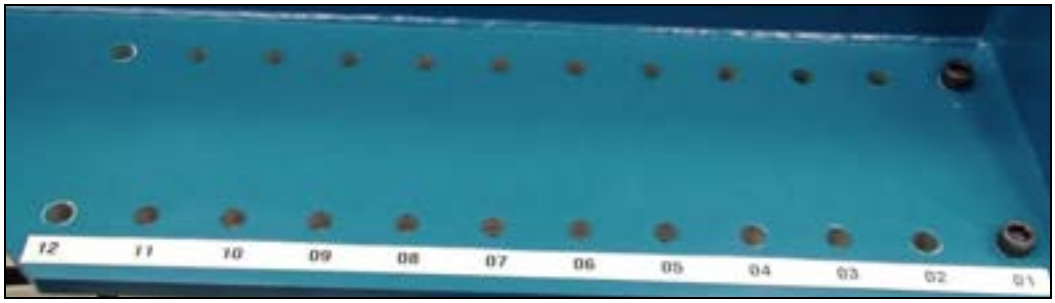

FIGURE 3-23. POSITIONS DES TROUS DE BOULON DU CONTREPOIDS

⚠ AVERTISSEMENT

Serrez les boulons de fixation du bras du contrepoids à 110 pi-lb (150 Nm) pour éviter tout mouvement inattendu qui pourrait causer des blessures graves, voire mortelles.

Vérifiez que tout le matériel de montage est sécurisé. Un contrepoids lâche peut tomber pendant le fonctionnement, blessant gravement l'opérateur ou des personnes présentes.

Procédez comme suit pour monter le contrepoids :

1. Positionnez le contrepoids à l'emplacement requis par vos besoins d'usinage.
2. Boulonnez solidement le contrepoids en place (Figure 3-24).

⚠ CAUTION

Pour un usinage précis et pour ne pas endommager la machine, le contrepoids et le bras d'usinage doivent toujours être à égale distance du centre de la machine. Les numéros d'emplacement devraient être les mêmes.

FIGURE 3-24. CONTREPOIDS ET BRAS D'USINAGE SUR LA TABLE ROTATIVE

3.8 MONTAGE DE LA MACHINE SUR LA PIÈCE À USINER

Une fois les pieds du mandrin correctement configurés et fixés au mandrin, la machine est prête à être montée sur la pièce à usiner.

Voir la Section 3.4 à la page 25 pour une liste complète des dangers inhérents à l'installation.

3.8.1 Montage sur DI de la machine en position horizontale

Procédez comme suit pour monter la machine sur le DI sur une bride horizontale :

1. Réglez les pieds du mandrin de montage sur DI à une dimension inférieure de 0,01" (0,25 mm) par patte à la dimension du diamètre intérieur de la pièce à usiner.
2. Positionnez le bras d'usinage (voir la Section 3.6 à la page 35) et le bras du contrepoids (voir la Section 3.7 à la page 40) avant le levage (voir la Section 3.3 à la page 23).
3. Soulevez la machine dans le diamètre intérieur de la pièce, en utilisant les quatre anneaux de levage sur le moyeu supérieur (comme indiqué à la Figure 3-2 à la page 24).
4. Étendez les pieds du mandrin en positions 6:00, 9:00, 12:00 et 3:00 pour fixer la machine en place.
5. Centrez et mettez la machine de niveau sur la bride comme décrit dans la Section 3.9 à la page 49.

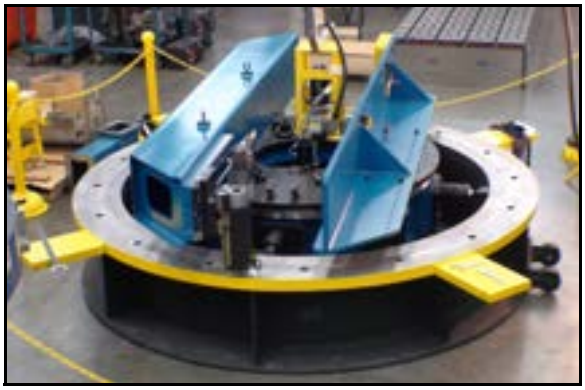

FIGURE 3-25. MONTAGE HORIZONTAL DE LA MACHINE

3.8.2 Montage sur DE de la machine en position horizontale

Procédez comme suit pour monter la machine sur le DE sur une bride horizontale :

1. Positionnez le bras d'usinage (voir la Section 3.6 à la page 35) et le bras du contrepoids (voir la Section 3.7 à la page 40) avant le levage (voir la Section 3.3 à la page 23).
2. Soulevez la machine au-dessus de la bride en utilisant les quatre points de levage indiqués (comme sur la Figure 3-2 à la page 24).
3. Centrez et mettez la machine de niveau sur la bride comme décrit dans la Section 3.9 à la page 49.

4. Serrez l'écrou (illustré au milieu de la Figure 3-26) à sur 230 pi-lb (310 Nm).

TABLEAU 3-9. IDENTIFICATION DE LA PLAQUE DE CENTRAGE DE MONTAGE SUR DE

Numéro	Composant
1	Serrage
2	Nivellement
3	Centrage

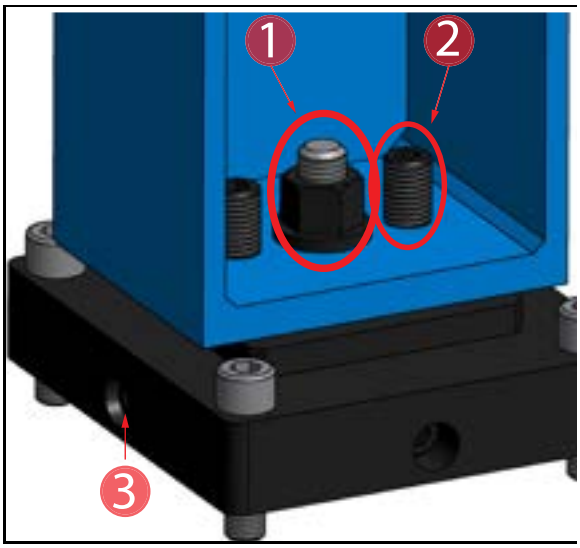

FIGURE 3-26. RÉGLAGES DE LA PLAQUE DE CENTRAGE DE MONTAGE SUR DE

3.8.3 Montage sur DI de la machine en position verticale

Lors du montage de la CM6200 en position verticale, veillez à ce que l'ensemble de levage (P/N 68425 à la Figure 3-9 à la page 29) soit correctement installé sur la machine. Ce dispositif de levage aidera à maintenir la machine stable et perpendiculaire, ce qui rendra le montage vertical de la machine plus sûr et plus facile.

Procédez comme suit pour monter la machine sur le DI sur une bride verticale :

1. Réglez les pieds du mandrin de montage sur DI à une dimension inférieure de 0,01" (0,254 mm) par patte à ce qui est requis.
2. Positionnez le bras d'usinage (voir la Section 3.6 à la page 35) et le bras du contrepoids (voir la Section 3.7 à la page 40) avant le levage (voir la Section 3.3 à la page 23).

⚠ AVERTISSEMENT

Fixez toutes les pièces mobiles pour les empêcher de se balancer au point le plus bas.

3. Fixez et serrez à 310 Nm (230 ft-lbs) l'ensemble de levage (Réf. 68425 à la Figure 3-9).
4. Soulevez la machine dans le diamètre intérieur de la bride à l'aide de l'ensemble de levage, jusqu'à ce que les pattes de réglage reposent contre la bride.
5. Étendez les pieds du mandrin en positions 6:00, 9:00, 12:00 et 3:00 pour fixer la machine en place.

6. Utilisez une deuxième méthode de fixation, en plus des pieds de blocage. Consultez la Section 3.5.3 à la page 33 pour voir les options de fixation pour le montage sur DI.

DANGER

Il faut utiliser soit la plaque de soudure, soit la bride de serrage pour fixer la CM6200 dans la pièce, **en plus du** verrouillage des pieds de vérin. Si la machine n'est pas correctement fixée, elle risque de tomber de la pièce, ce qui peut entraîner des blessures graves, voire mortelles.

7. Retirez tous les outils de la pièce à usiner et de la machine.
8. Centrez et mettez la machine de niveau sur la bride comme décrit dans la Section 3.9 à la page 49.

3.8.4 Montage sur DE de la machine en position verticale

Lors du montage de la CM6200 en position verticale, veillez à ce que l'ensemble de levage (P/N 68425 à la Figure 3-9) soit correctement installé sur la machine. Ce dispositif de levage aidera à maintenir la machine stable et perpendiculaire, ce qui rendra le montage vertical de la machine plus sûr et plus facile.

Procédez comme suit pour monter la machine sur le DE sur une bride verticale :

1. Positionnez le bras d'usinage (voir la Section 3.6 à la page 35) et le bras du contrepoids (voir la Section 3.7 à la page 40) avant le levage (voir la Section 3.3 à la page 23).

AVERTISSEMENT

Fixez toutes les pièces mobiles pour les empêcher de se balancer au point le plus bas.

2. Fixez et serrez à 310 Nm (230 ft-lbs) l'ensemble de levage (Réf. 68425, Figure 3-9).
3. Soulevez la machine au-dessus de la bride à l'aide de l'ensemble de levage, jusqu'à ce que les pattes de réglage reposent contre la bride.
4. Fixez solidement la jambe DE aux plaques de jonction (fournies par le client) ou à toute autre structure de montage appropriée (voir la Section 3.8 à la page 42).

DANGER

Si la machine n'est pas correctement fixée, elle risque de tomber de la pièce, ce qui peut entraîner des blessures graves, voire mortelles.

5. Retirez tous les outils de la pièce à usiner et de la machine.

6. Centrez et mettez la machine de niveau sur la bride comme décrit dans la Section 3.9 à la page 49.
7. Serrez l'écrou (illustré au milieu de la Figure 3-26 à la page 43) à 230 ft-lbs (310 Nm).

3.8.5 Montage inversé

La CM6200 peut également être montée en position inversée sur la pièce à usiner. Dans cette position, le bras d'usinage et le contrepoids se trouvent sous le mandrin, au lieu d'être au-dessus du mandrin en position horizontale. La procédure de montage horizontal doit être suivie pour monter le support DI inversé. Soyez extrêmement prudent lorsque vous faites tourner la machine.

⚠ DANGER

Les machines qui se balancent ou tombent peuvent blesser gravement ou tuer le personnel qui se trouve à proximité de la machine. Fixez tous les composants à la machine et empêchez la table rotative de tourner avant de soulever la machine. Des blessures graves ou mortelles peuvent résulter de mauvaises méthodes de levage.

Consultez la Section 3.3 à la page 23 pour obtenir des instructions sur le levage du dispositif, en portant une attention particulière à la Figure 3-2 à la page 24 et à l'utilisation de l'ensemble de levage tel qu'illustré à la Figure 3-4 à la page 25.

⚠ DANGER

Il faut utiliser soit la plaque de soudure, soit la bride de serrage pour fixer la CM6200 dans la pièce, **en plus du** verrouillage des pieds de vérin. Si la machine n'est pas correctement fixée, elle risque de tomber de la pièce, ce qui peut entraîner des blessures graves, voire mortelles.

ASTUCE :

La méthode préférée pour inverser la machine est l'utilisation de deux grues.

Procédez comme suit pour le montage inversé :

1. Retirez les pieds de réglage ou le support frontal s'ils sont fixés (Figure 3-27).

FIGURE 3-27. MONTAGE AVANT L'INVERSION

2. Placez un morceau de contreplaqué à côté de la machine pour qu'elle puisse reposer dessus après le levage (Figure 3-28).
3. Fixez les sangles du dispositif de levage à quatre anneaux de levage sur le corps du mandrin (deux sur les côtés opposés), comme indiqué à la Figure 3-28.
4. Soulevez lentement la machine jusqu'à une position verticale (voir la Figure 3-29).

FIGURE 3-28. PLANCHE ET SANGLES POUR L'INVERSION

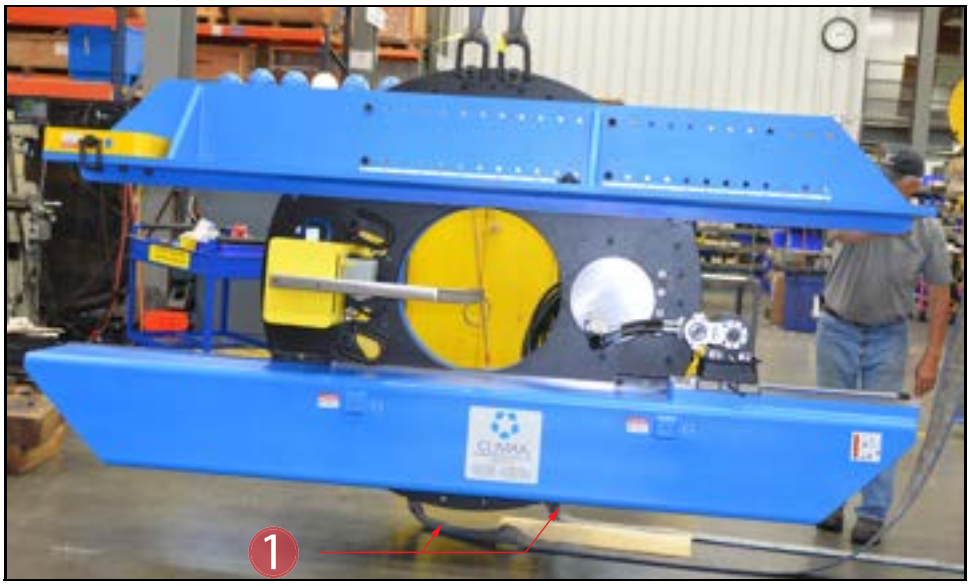

FIGURE 3-29. CM6200 EN POSITION VERTICALE

TABLEAU 3-10. IDENTIFICATION DE LA CM6200 VERTICALE

Numéro	Composant
1	Sangles inférieures

5. Si vous utilisez deux grues, détachez les sangles inférieures illustrées à la Figure 3-29.
6. Levez la machine suffisamment haut pour placer des blocs sous le bras de rotation et le corps du mandrin.
7. Abaissez la machine sur les blocs (voir la Figure 3-30). Si vous utilisez deux grues, attachez à nouveau les sangles aux anneaux de levage inférieurs.

FIGURE 3-30. LA CM6200 VERTICALE SUR LES BLOCS AVEC LES SANGLES RATTACHÉES

8. Soulevez la machine verticalement du sol et des blocs (voir la Figure 3-31).
9. Retirez les blocs.

FIGURE 3-31. LEVAGE DE LA CM6200 DES BLOCS

10. Relevez les sangles inférieures jusqu'à ce que la machine soit complètement inversée (voir la Figure 3-32).
11. Replacez les blocs sous le bras de rotation et le bras de contrepoids.

FIGURE 3-32. RENVERSEMENT DE LA CM6200

12. Abaissez la machine sur les blocs (voir la Figure 3-33).
13. Installez le dispositif de montage approprié (montage sur DI, montage sur DE ou montage frontal).

FIGURE 3-33. EMPLACEMENT DES BLOCS

3.9 CENTRAGE ET MISE DE NIVEAU DE LA MACHINE

AVIS

Lors de l'usinage à l'extérieur ou en plein soleil, il faut savoir que les changements de température peuvent affecter les tolérances finales. CLIMAX recommande d'installer un ombrage temporaire dans ces circonstances.

Procédez comme suit pour centrer avec précision la machine et la mettre de niveau :

1. Utilisez un comparateur à cadran pour indiquer le niveau de la surface de la pièce pendant la rotation de la machine.
2. Mettez la machine de niveau en procédant comme suit :

FIGURE 3-34. FIXATION DE L'INDICATEUR À CADRAN

   a) Pour le DI, réglez les vis de nivellement de chacun des pieds du mandrin de nivellement (voir la Figure 3-35).

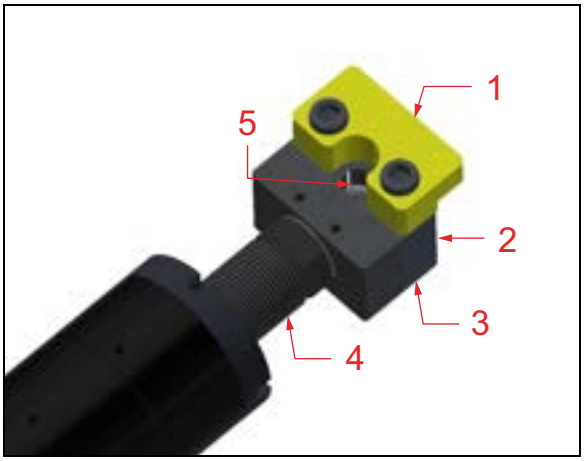

FIGURE 3-35. ENSEMBLE DES PIEDS DU MANDRIN DE NIVELLEMENT

TABLEAU 3-11. IDENTIFICATION DES PIEDS DU MANDRIN DE NIVELLEMENT

Numéro	Composant
1	Patte de réglage
2	Dispositif de réglage des mâchoires
3	Dispositif de réglage de la base
4	Boulon de levage
5	Vis de mise à niveau

   b) Pour le DE, réglez les vis de réglage de nivellement au-dessus de la plaque de centrage (voir la Figure 3-26 à la page 43).
3. Repositionnez le comparateur à cadran pour vérifier le centrage de la machine.
4. Centrez la machine en procédant comme suit :

a) Pour le DI, réglez les paires opposées de pieds de mandrin (un pied illustré à la Figure 3-35).

b) Pour le DE, réglez les vis de réglage du centrage dans la plaque de centrage (voir le Figure 3-26 à la page 43).

5. Vérifiez le niveau et le centrage de la machine.
6. Répétez step 2 à step 6 jusqu'à ce que la machine soit alignée.
7. Fixez la machine en place conformément à la Section 3.10 à la page 51 (pour le DI) et Section 3.5.3 à la page 33 (pour le DE).
8. Vérifiez à nouveau l'alignement de la machine. Si des ajustements sont nécessaires, répétez "Fixation du support DI" à la page 51 (pour le DI) et Section 3.5.3 à la page 33 (pour le DE).
9. Marquez le point haut de la bride afin que la profondeur de fraisage initiale puisse être définie à ce point.
10. Retirez tout le matériel de fixation.

3.10 FIXATION DU SUPPORT DI

Dans les configurations sur DI, la CM6200 est maintenue dans la pièce par la force de friction résultant du serrage des huit vis de blocage des pieds du mandrin.

AVIS

Toutes les vis de serrage des pieds du mandrin doivent être serrées à un couple d'au moins 325 pi-lb (441 Nm). La valeur minimale du couple de serrage des vis de levage a été déterminée avec des boulons à filetage lubrifié et une interface boulon/pièce sèche.

Avant d'installer la CM6200 sur la pièce à usiner, vérifiez les points suivants :

- La surface de la pièce qui entrera en contact avec les vis de levage CM6200 est sèche et complètement exempte d'huile, de graisse ou de tout autre lubrifiant.

⚠ AVERTISSEMENT

La présence d'humidité, d'huile ou de lubrifiants sur les surfaces de contact de la pièce à travailler avec le pied de serrage peuvent entraîner une force de friction de levage insuffisante et permettre à la machine de se déplacer ou de se détacher de la pièce.

- Les filets des vis de levage des pieds du mandrin sont enduits d'un lubrifiant anti-grippant.

⚠ AVERTISSEMENT

La non-application de lubrifiant anti-grippant sur les filets des vis de levage peut entraîner une force de serrage des vis de levage plus faible que prévu, ce qui peut permettre à la machine de se déplacer ou de se détacher de la pièce.

Procéder comme suit pour installer le support DI :

1. Serrez toutes les vis de levage de nivellement à un couple **minimum** de 325 pi-lb (441 Nm). Alternez les jambes de vérin opposées lors du serrage pour vous assurer que l'alignement configuré n'est pas perturbé.
2. Étendez toutes les vis de levage des pieds de mandrin fixes et serrez-les à un couple **minimum** de 325 pi-lb (441 Nm).

⚠ AVERTISSEMENT

Les pieds du mandrin de nivellement et fixes doivent être serrés selon les spécifications de couple indiquées dans les instructions ci-dessus. Si les pieds du mandrin ne sont pas suffisamment serrés, la machine risque de glisser ou de tomber de la pièce à usiner, ce qui peut entraîner des blessures graves, voire mortelles. Reportez-vous à la Section 3.5.3 pour voir les méthodes de fixation de la CM6200 dans la pièce à usiner.

3. Fixez les vis de levage en utilisant les méthodes décrites dans la Section 3.5.3 à la page 33.
4. Retirez les pattes de réglage si le fonctionnement de la machine ne peut être accompli en les laissant fixés aux pieds du mandrin de nivellement.

⚠ AVERTISSEMENT

Ne retirez pas plus d'une patte de réglage à la fois, car cela peut provoquer le glissement de la machine dans la bride et la chute de la pièce, ce qui peut entraîner des blessures ou la mort.

Les pattes de réglage ne doivent être retirées que si la fraiseuse ne peut pas effectuer les opérations d'usinage nécessaires sur la pièce à usiner lorsqu'elles sont encore fixés aux pieds du mandrin. Le retrait des pattes de réglage réduit la stabilité de la machine.

En plus de ce couple minimum de 325 pi-lb (441 Nm), il convient d'utiliser le plus grand nombre possible des méthodes de fixation suivantes en combinaison. **Les applications de montage vertical et inversé doivent utiliser soit la plaque de soudure, soit la bride de serrage, en plus du verrouillage des pieds de levage.** Consultez la Section 3.8.3 à la page 43 et la Section 3.8.5 à la page 45 pour plus d'informations sur le montage vertical et inversé.

- Ecrou de blocage interne : Un écrou de blocage interne est fourni avec chaque vis de levage, il doit être serré lorsque la machine est centrée et que les vis de levage sont serrées au couple selon les spécifications. Le but de l'utilisation de l'écrou de blocage interne est d'empêcher le recul de la vis de levage en raison des vibrations de la machine pendant le fonctionnement. Voir la Section 3.5.2 à la page 29.
- Plaque de soudure : Ces quatre plaques doivent être parfaitement soudées sur la pièce à usiner (avec un cordon de soudure sur la longueur de chaque extrémité et quelques cordons plus courts sur l'avant) avec la machine en place et boulonnée sur le pied de mandrin de nivellement réglable.
- Serrage de la bride : Les brides de fixation sont fournies avec les boulons de levage de nivellement réglables et sont composées de la patte de réglage et de la bride de fixation interne. Ces éléments se fixent sur une surface intérieure de la bride de montage.

DANGER

Ne retirez pas la grue tant que les boulons de levage n’ont pas été vissés aux couples spécifiés (325 pi-lb [441 Nm]) et qu'au moins une des méthodes de fixation ne soit en place.

3.11 INSTALLATION DES CÂBLES

AVERTISSEMENT

Les machines qui tombent ou qui tournent peuvent causer des blessures graves à l'opérateur. Assurez-vous que la machine est fixée à la pièce à usiner avant de brancher les câbles électriques.

Effectuez les opérations suivantes pour permettre le raccordement de l'alimentation électrique :

1. Vérifiez que toutes les fiches et tous les raccords de câbles sont propres.
2. Remplacez toute pièce usée ou endommagée.
3. Vérifiez que le sectionneur principal est en position OUVERT.
4. Vérifiez que le bouton d'arrêt d'urgence de la commande suspendue est enfoncé.
5. Verrouillez toute l'alimentation électrique.
6. Raccordez le câble de la commande principale à la boîte de jonction principale du boîtier CM6200.
7. Raccordez le conduit au servomoteur.
8. Fixez le support de conduit à mousqueton à la tour de tuyau.
9. Raccordez l'autre extrémité au panneau de commande de la HPU.

10. Fixez le support de conduit au cadre de la HPU.
11. Raccordez tous les autres câbles de commande au panneau électrique de la HPU.

AVIS

Le servomoteur doit être connecté à la HPU, mais pas fixé à la machine. Vous risquez d'endommager le servomoteur si le moteur est déconnecté lors de la mise sous tension de la HPU.

⚠ CAUTION

Pour éviter d'endommager les lignes électriques, vérifiez qu'elles sont éloignées des pièces mobiles et des points de pincement pendant le fonctionnement.

12. Vérifiez que tout le personnel se tient à l'écart de la table rotative.
13. Fermez le sectionneur principal de la HPU.
14. Tournez et relâchez le dispositif d'arrêt d'urgence sur le panneau de commande de la HPU.
15. Tournez et relâchez le bouton d'arrêt d'urgence du boîtier de commande.
16. Démarrez la HPU.
17. Actionnez le moteur de la broche pour vous assurer que la broche tourne dans le sens prévu.
18. Si le sens de rotation doit être modifié, arrêtez la marche par à-coups. Pour les moteurs de broche à alimentation hydraulique, retirez et inversez les tuyaux de manière à ce que le sens du débit soit correct. Pour les moteurs de broche à alimentation électrique, changez le sens du système d'asservissement sur le panneau de commande.

⚠ CAUTION

Débrancher le câble de commande principal sous tension peut endommager les composants électriques du panneau principal.

4 FONCTIONNEMENT

DANS CE CHAPITRE :

4.1 Configuration de fonctionnement

Assurez-vous de ne pas utiliser cette machine sans avoir suivi une formation adéquate pour bien comprendre les procédures de configuration, d'utilisation et de maintenance en toute sécurité.

⚠ AVERTISSEMENT

Seuls les opérateurs ayant reçu une formation sur l'utilisation de la CM6200 doivent régler et utiliser la machine. Ne pas utiliser cette machine par mauvais temps sans protection contre les intempéries. Pour éviter des blessures graves, ne vous approchez pas des machines en mouvement pendant qu'elles sont en fonctionnement. Soyez toujours conscient de la position des différentes personnes situées à proximité de la machine.

AVIS

Le servomoteur doit être connecté à la HPU, mais pas fixé à la machine. Vous risquez d'endommager le servomoteur si le moteur est déconnecté lors de la mise sous tension de la HPU.

4.1.1 Contrôles avant démarrage

⚠ AVERTISSEMENT

La machine rotative peut causer des blessures graves. Eteindre et verrouiller la machine avant d'effectuer les contrôles avant l'utilisation. Lors de l'utilisation, sachez toujours où se trouvent toutes les personnes à proximité de la machine.

Avant de démarrer la machine, vérifiez toujours les éléments suivants :

- Le bras d'usinage et le contrepoids sont fixés au plateau tournant à un couple de 110 pi-lb (150 Nm).

⚠ CAUTION

Assurez-vous que la machine (y compris la broche et toutes les pièces mobiles) peut tourner librement sans se heurter.

- La machine est montée en sécurité sur la pièce à usiner.
- La broche est fixée au bras d'usinage et à la plaque d'adaptation.
- Toutes les vis de levage et de serrage sont fixées (avec un couple de serrage de 325 pi-lb [441 Nm]).
- Les câbles et les tuyaux sont sécurisés à l'écart du passage des pièces en mouvement de la machine.
- Toutes les poignées et tous les outils sont retirés de la machine.
- La zone est clairement délimitée par une zone de sécurité.

4.1.2 Configuration de l'outil

La tête de fraisage comporte quatre vis de tramage adjacentes aux vis de montage du boîtier. Cela permet d'éloigner la tête de fraisage de la plaque adaptatrice pour

tramer l'orientation verticale de la broche. Deux vis supplémentaires situées au-dessus de la plaque permettent de régler l'inclinaison de la tête de fraisage.

La tête de fraisage étant montée sur un pivot central, l'angle de la tête de fraisage doit être aligné avant de pouvoir commercer l'usinage. Ce réglage est effectué à l'aide des vis de réglage situées dans les blocs montés au-dessous ou au-dessus du boîtier. Les vis de réglage en rotation permettent de faire légèrement tourner le boîtier afin d'obtenir une orientation verticale ou horizontale relative au bras d'usinage.

Pour procéder au réglage de la tête de fraisage et de la broche, procédez comme suit :

1. Desserrez le verrou.
2. Ajustez la tête de fraisage et la broche.
3. Utilisez le DRO pour positionner la tête de fraisage.
4. Serrez le verrou avant commencer une opération d'usinage.

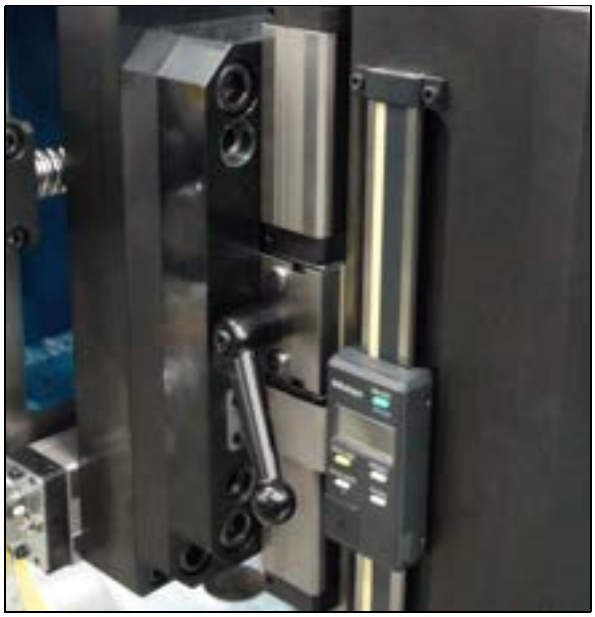

FIGURE 4-1. BLOCAGE DE LA BROCHE ET DRO

4.1.3 Équerrage de la broche

Le tramage de la broche est le processus utilisé pour orienter la broche.

AVIS

La broche doit être orientée perpendiculairement à la machine-outil elle-même plutôt qu'à la pièce à travailler. La pièce n'est pas un point de référence fiable.

Procédez comme suit pour tramer la broche :

1. Si le moteur d'entraînement de la broche est installé, retirez-le de la boîte d'engrenages de la broche afin de permettre la rotation manuelle de la broche.

2. Installez un indicateur à cadran à base magnétique sur le corps de l'outil de coupe de la fraise (voir la Figure 4-2).

FIGURE 4-2. COMPARATEUR À CADRAN SUR LA FRAISE EN BOUT

ASTUCE :

Une fixation à angle droit orientée à partir de la glissière linéaire peut servir de point de référence perpendiculaire au bras de fraisage.

3. Étendez l'indicateur pour établir un contact avec le bas de la surface du piston de la machine (voir la Figure 4-3).
4. Lorsque le stylet de l'indicateur touche la surface du coulisseau, réglez le cadran de l'indicateur sur « 0 ».

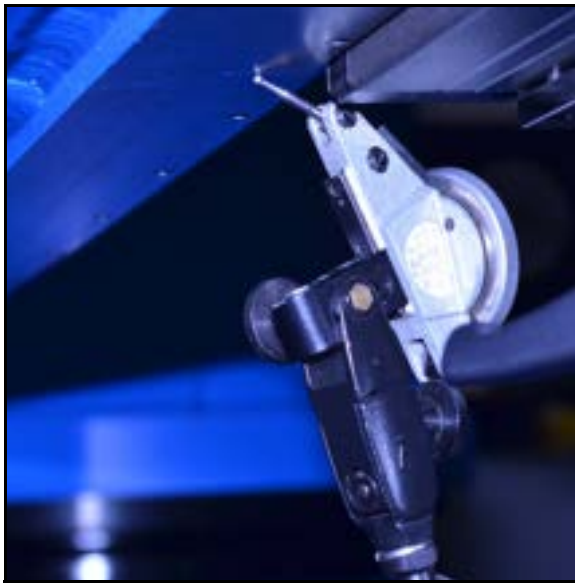

FIGURE 4-3. INDICATEUR TOUCHANT LA SURFACE DU COULISSEAU DE LA MACHINE

5. Tournez la broche de 180° sur la surface du coulisseau de la machine (voir la Figure 4-4).

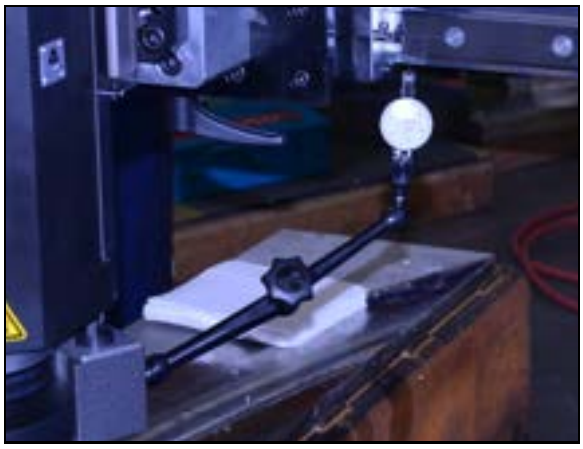

FIGURE 4-4. BROCHE TOURNÉE VERS LA SURFACE DU COULISSEAU

ASTUCE :

Avec la broche standard, l'angle est limité à ± 1°. Si un angle plus important est nécessaire, un adaptateur pour tête pivotante sera nécessaire. Pour plus d'informations, contactez CLIMAX.

6. Effectuez une lecture du cadran. Si la lecture dépasse de 0,03 mm (0.001 po) le seuil de tolérance d'équerrage, procédez comme suit :
   a) Desserrez les quatre vis à tête cylindrique de façon à ce qu'elles soient juste légèrement serrées (de 1 à 3 pi-lb [1 à 4 Nm]), comme illustré à la Figure 4-5, de sorte que les vis de réglage de tramage puissent ajuster la plaque.

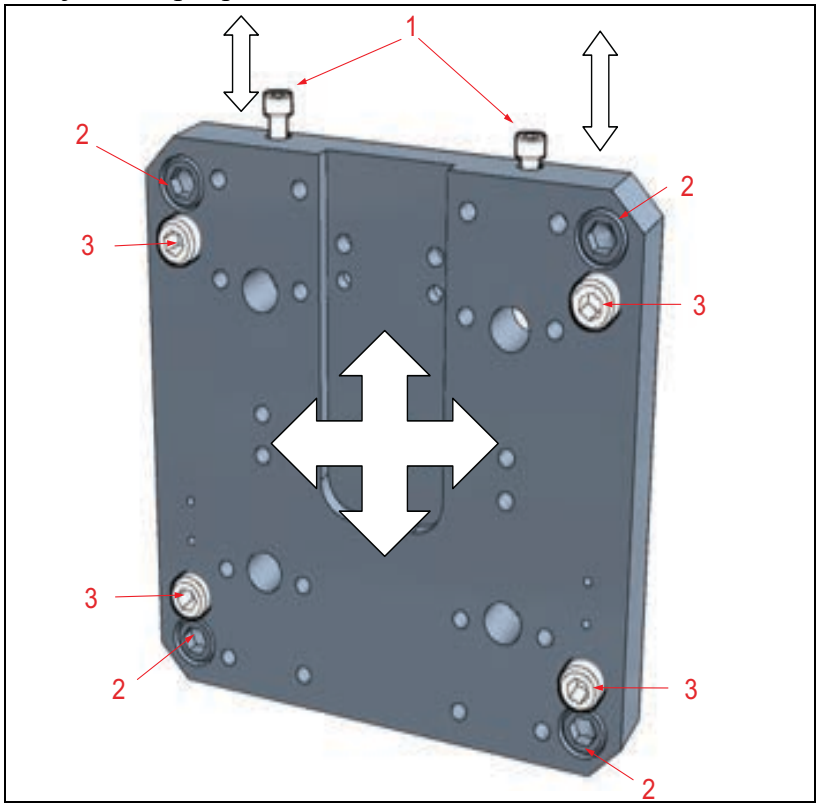

FIGURE 4-5. PLAQUE DE MONTAGE DE LA TÊTE DE FRAISAGE ET POINTS D'ÉQUERRAGE

TABLEAU 4-1. IDENTIFICATION DE LA PLAQUE DE MONTAGE DE LA TÊTE DE FRAISAGE

Numéro	Composant
1	Rotation des points d'équerrage sur l'axe Y
2	Desserrer d'abord
3	Points d'équerrage sur l'axe Y

AVIS

Il y a deux vis à tête de chaque côté de la tête de fraisage, montée au centre de la plaque de tramage illustrée à la Figure 4-5.

b) Ajustez les vis de l'axe Y jusqu'à ce que l'indicateur affiche une valeur de 0,001" (0,03 mm). Voir la Figure 4-6.

FIGURE 4-6. RÉGLAGE DE LA VIS DE L'AXE Y

c) Ajustez les vis de l'axe X (comme illustré à la Figure 4-7) jusqu'à ce que l'indicateur affiche une valeur de 0,001" (0,03 mm).

7. Répétez la procédure de balayage de l'indicateur aux emplacements 0° et 180° et en ajustant l'orientation de la broche jusqu'à obtenir la même lecture aux deux emplacements.
8. Une fois que les deux axes sont dans les limites de tolérance, serrez les boulons de fixation à 61 Nm (45 pi-lb).

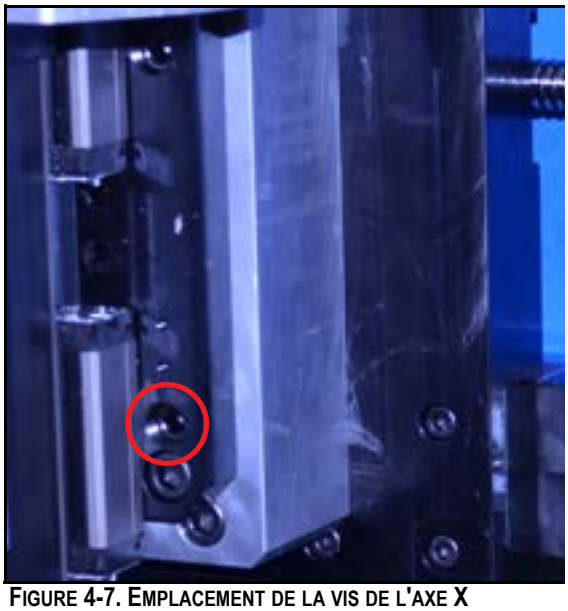

FIGURE 4-7. EMPLACEMENT DE LA VIS DE L'AXE X

ASTUCE :

Laissez l'indicateur à cadran installé pendant le serrage final des vis de montage afin de pouvoir vérifier que le boîtier ne bouge pas pendant la mise en tension.

9. Réinstallez le moteur d'entraînement de la broche (si nécessaire).

Lorsque vous êtes prêt à utiliser la machine, notez la surface usinée après le premier passage.

Un motif hachuré est le résultat optimal, comme illustré à droite de la Figure 4-8.

Si le résultat est tranchant, comme illustré à la Figure 4-8 à gauche, ajustez les vis de l'axe X conformément à l'étape c à la page 59.

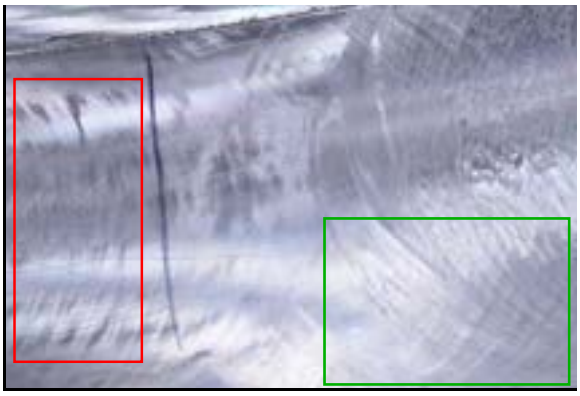

FIGURE 4-8. RÉSULTATS DES PASSES D'USINAGE

4.2 BOÎTIER DE COMMANDE

4.2.1 Systèmes de coordonnées

Cette machine possède deux systèmes de coordonnées distincts qui suivent la position de la machine. Le point zéro peut être réinitialisé à tout moment sur l'un des systèmes de coordonnées sans affecter la position dans l'autre système.

AVIS

La machine répondra aux instructions de mouvement différemment selon le système de coordonnées utilisé.

Coordonnées absolues

Dans le système de coordonnées absolues, toutes les destinations de déplacement sont relatives à une position zéro absolue définie. Par exemple, une entrée de destination de 90 degrés entraînera le déplacement de la machine à la position absolue de 90 degrés, quelle que soit la position actuelle de la machine. La machine se retrouvera à la position de 90 degrés, que la direction du déplacement soit dans le sens + ou -. Le sens de déplacement des coordonnées absolues peut être contrôlé.

Un déplacement de 0 à 90 degrés dans le sens positif entraîne une rotation de 90 degrés dans le sens positif. Un déplacement de 0 à 90 degrés dans le sens négatif entraîne une rotation de 270 degrés dans le sens négatif, la position finale étant toujours la position absolue de 90 degrés.

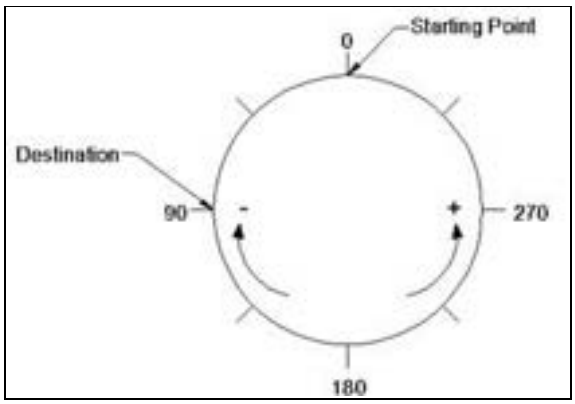

FIGURE 4-9. COORDONNÉES ABSOLUES

Coordonnées incrémentales

Dans le système de coordonnées incrémentales, les incréments de déplacement sont toujours relatifs à la position actuelle de la machine. Par exemple, si la machine est à 180 degrés par rapport au zéro absolu, un déplacement de moins 90 donnera une position absolue finale de

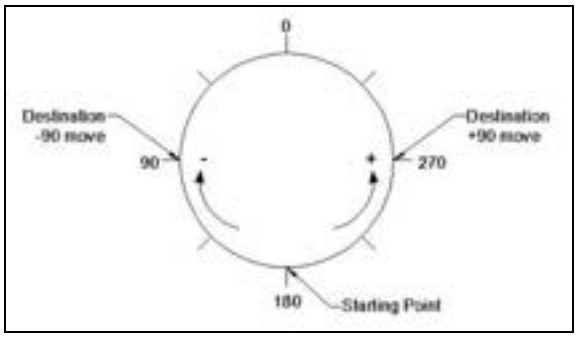

FIGURE 4-10. COORDONNÉES INCRÉMENTALES

90 degrés. Un déplacement de plus 90 donnera une position absolue de 270 degrés.

4.2.2 Généralités sur les commandes de la machine

Le boîtier de commande de l'IHM est l'interface permettant de gérer les opérations de la CM6200. Vous utiliserez les écrans suivants pour contrôler et régler les différentes fonctions de la machine. Le boîtier de commande est illustré à la Figure 4-11 à la page 61.

FIGURE 4-11. CM6200 BOÎTIER DE COMMANDE

Lorsque l'IHM est allumée, l'écran illustré à la Figure 4-12 s'affiche. Le réglage par défaut sera défini pour tous les paramètres de la machine.

FIGURE 4-12. OUVERTURE DE L'ÉCRAN D'ACCUEIL AU DÉMARRAGE

AVIS

Les paramètres de l'utilisateur ne sont pas sauvegardés lorsque l'unité est éteinte.

Après l'écran d'accueil, l'écran de démarrage (Figure 4-13 à la page 62) s'affichera sur l'IHM. L'utilisateur est averti de l'utilisation de la machine et doit réinitialiser les paramètres et les connexions de la en appuyant sur le bouton RÉINIT. pour accéder au menu principal.

FIGURE 4-13. RÉINITIALISER L'ÉCRAN DE DÉMARRAGE

Si le bouton d'arrêt d'urgence est toujours enfoncé lorsque la machine est mise sous tension, le bouton de démarrage bleu (RÉINIT.) ne sera pas actif et le texte sous le bouton donnera des instructions pour le démarrage.

FIGURE 4-14. RÉINITIALISER L'ÉCRAN EN CAS DE BOUTON D'URGENCE ENFONCÉ

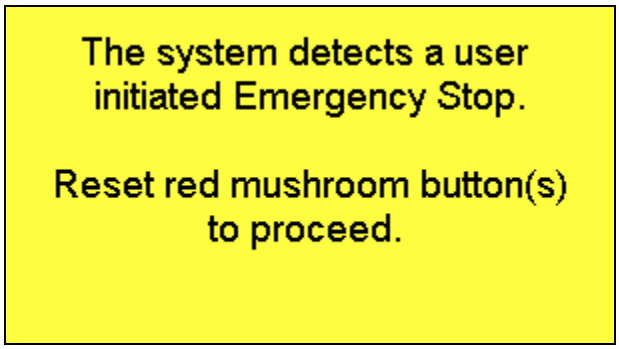

FIGURE 4-15. ÉCRAN CONTEXTUEL APRÈS LE DÉCLENCHEMENT DE L'ARRÊT D'URGENCE

Cet écran contextuel s'affiche également après le déclenchement de l'arrêt d'urgence. Une fois que l'opérateur a résolu la panne, l'écran de démarrage du système s'affiche.

D'autres pannes possibles dans le système seront affichées via des écrans contextuels :

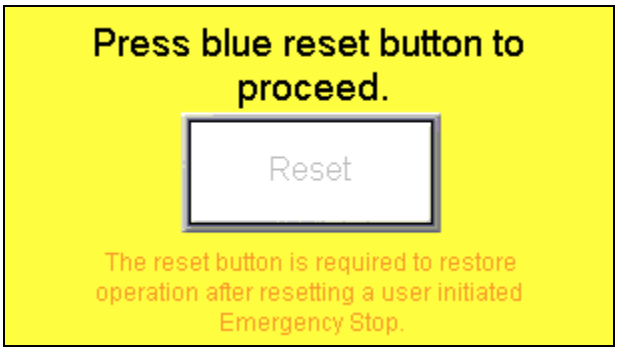

FIGURE 4-16. DEMANDE DE RÉINITIALISATION DE L'ÉCRAN CONTEXTUEL

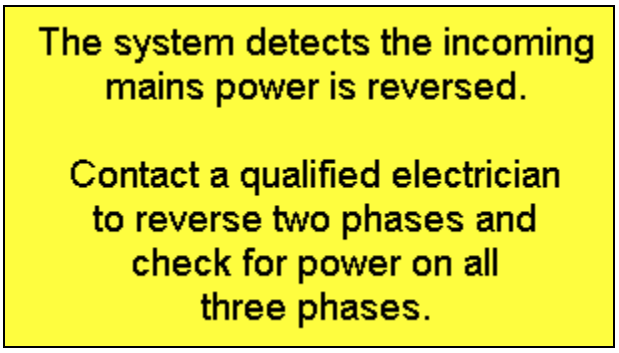

FIGURE 4-17. AVERTISSEMENT D'ALIMENTATION INVERSÉE

Une fois les pannes résolues, le bouton de réinitialisation devient actif et le système peut être réinitialisé. Après avoir réinitialisé le système, l'IHM est redirigée vers l'écran du menu principal.

⚠ CAUTION

Ne débranchez aucun câble du système lorsqu'il est sous tension ! Cela entraînerait des dommages au système.

⚠ AVERTISSEMENT

Avertissement concernant le servomoteur : ne pas brancher ou débrancher les câbles lorsque l'unité est sous tension.

4.2.3 Menu principal

L'écran du menu principal, illustré sur la Figure 4-18, permet d'accéder à tous les écrans principaux de fonctionnement de la machine.

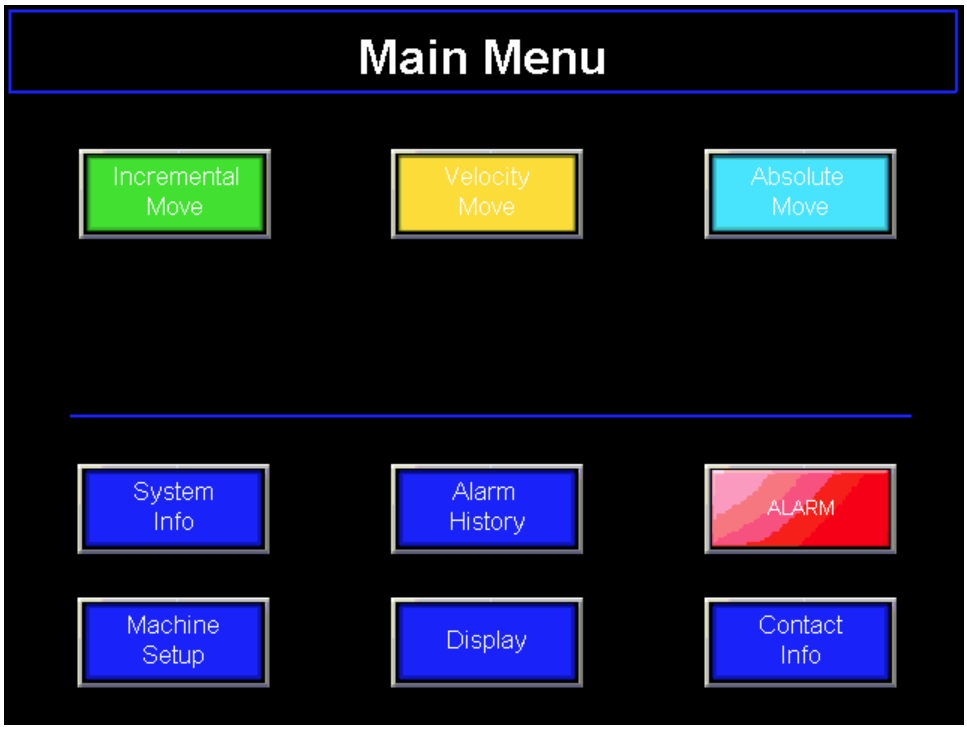

FIGURE 4-18. MENU PRINCIPAL SANS AVERTISSEMENT DU SERVOMOTEUR

Tous les boutons sont activés en les touchant. Certains boutons activent également des sous-écrans de saisie. Des explications supplémentaires sur chaque écran sont fournies ci-dessous.

Les boutons sont codés par couleur pour faciliter la reconnaissance des différents modes de fonctionnement. Les fonctions de coordonnées incrémentales sont codées par une couleur verte et les fonctions de coordonnées absolues par une couleur bleu clair.

4.2.4 Configuration de la machine

L'écran de configuration de la machine, représenté sur la Figure 4-19, affiche les paramètres de la machine qui peuvent être réglés par l'opérateur.

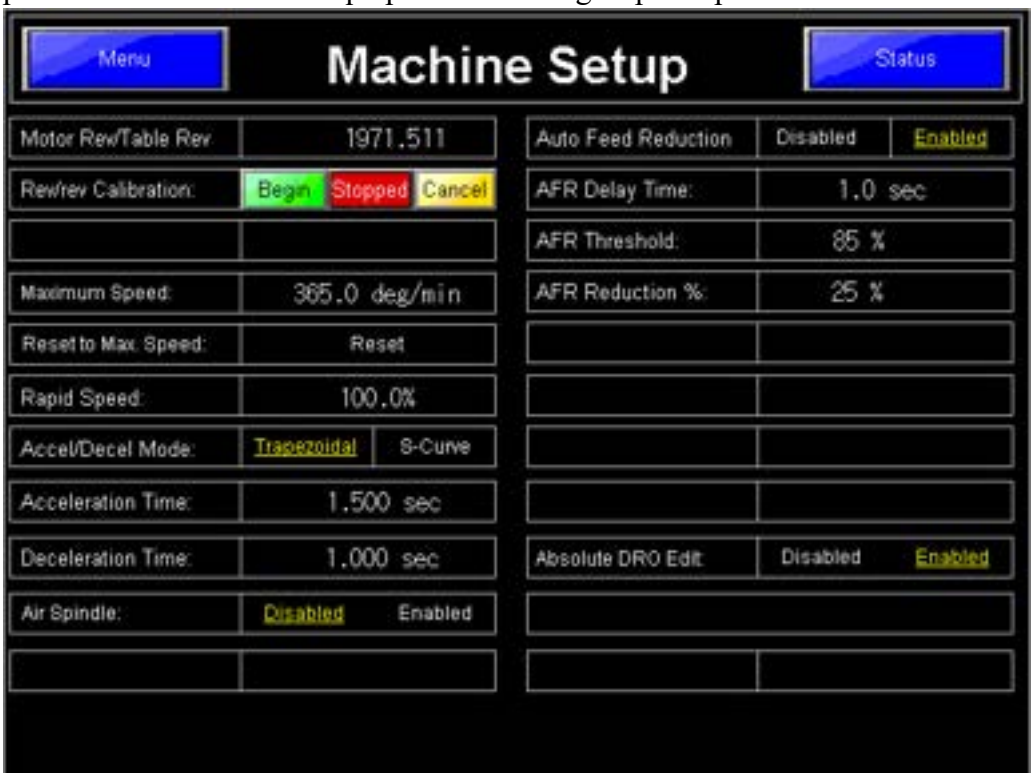

FIGURE 4-19. ÉCRAN DE CONFIGURATION DE LA MACHINE

Les paramètres d'usine standard de cette machine sont illustrés à la Figure 4-19. Ne modifiez pas les données Tour moteur/Tour table, car ces données sont basées sur le rapport de vitesse total réel de cette machine.

La Vitesse rapide est définie sur cet écran. Cette fonction est disponible dans d'autres écrans, mais elle est modifiable ici.

La réduction automatique de l'alimentation (AFR) est activée (ENABLED) par défaut. Cette fonction permet de protéger la machine contre les dommages causés par une surcharge. Si la machine rencontre une résistance due à des points de grippage ou à d'autres irrégularités pendant l'usinage qui dépassent le réglage du seuil de réduction automatique de l'alimentation (AFR THRESHOLD), le système comptera le délai de réduction automatique de l'alimentation (AFR DELAY TIME) et réduira automatiquement la vitesse d'alimentation du pourcentage de réduction automatique de l'alimentation (AFR REDUCTION %) spécifié. Si la résistance est toujours présente, le système continuera à la surveiller dans les intervalles de délai de réduction automatique de l'alimentation (AFR DELAY TIME) et continuera à réduire l'alimentation du pourcentage de réduction automatique de l'alimentation (AFR REDUCTION %) à chaque fois. L'opérateur peut ramener manuellement la machine aux vitesses normales à l'aide du boîtier de commande.

Toucher l'un des champs numériques permet d'afficher l'écran de saisie ci-dessous (Figure 4-20). Saisissez les données nécessaires et appuyez sur Entrée (ENTER).

Tous les paramètres de cette page sont rémanents et conservés en mémoire permanente même lorsque la machine est débranchée.

Si l'un des paramètres de configuration n'a pas été réglé sur un numéro valide, le message indiqué à la Figure 4-21 s'affiche. Accusez réception de ce message en appuyant sur la touche OK, et entrez les données requises dans l'écran de configuration (SETUP).

FIGURE 4-20. PAVÉ DE SAISIE DES NUMÉROS DE CONFIGURATION DE LA MACHINE

FIGURE 4-21. ÉCRAN DE VÉRIFICATION DES PARAMÈTRES DE CONFIGURATION

4.2.5 Déplacement incrémental

L'écran de déplacement incrémental, représenté à la Figure 4-22, permet de contrôler les opérations de la CM6200 selon un système de coordonnées incrémental.

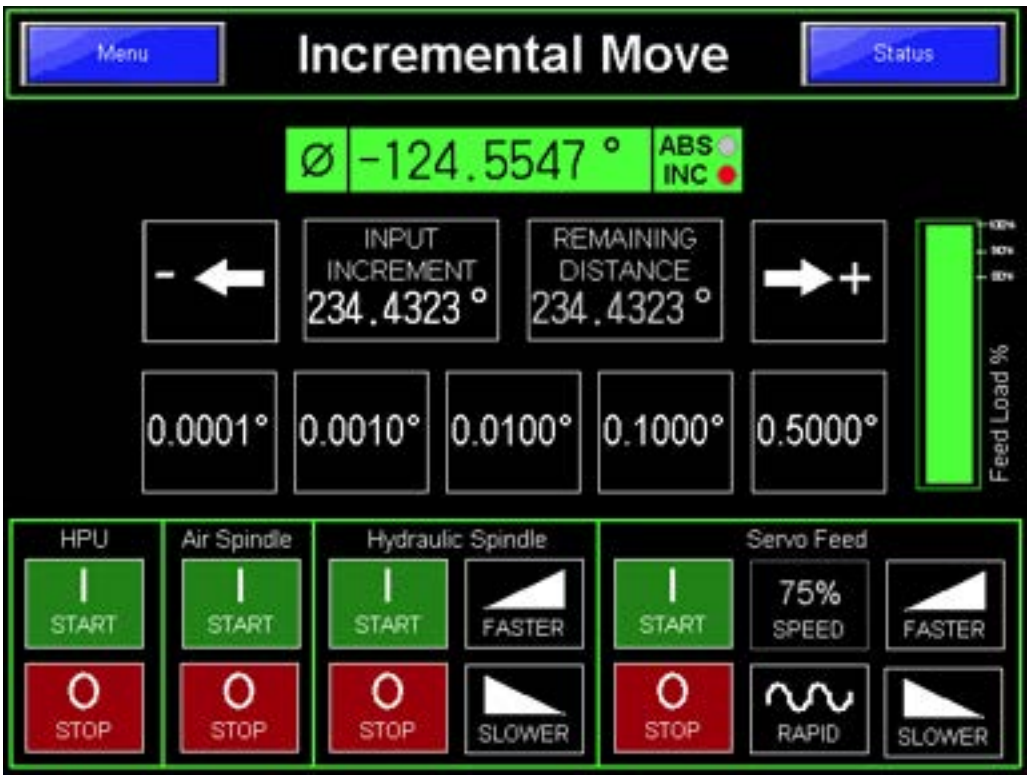

FIGURE 4-22. ÉCRAN DE DÉPLACEMENT INCRÉMENTAL

Les déplacements incrémentaux sont relatifs à la position actuelle, dans la direction et à la vitesse que vous saisissez.

Un déplacement incrémental correspond toujours à la distance saisie dans le champ « incrément d'entrée », dans la direction et à la vitesse sélectionnées.

AVIS

En fonction de la configuration demandée des options de la CM6200, seules certaines fonctions seront activées et visibles. Par conséquent, certaines fonctions présentées ci-dessus peuvent ne pas être disponibles sur le boîtier de commande fourni.

4.2.6 Déplacement absolu

L'écran de déplacement absolu, représenté à la Figure 4-23, permet de contrôler les opérations de la CM6200 en fonction d'un système de coordonnées absolues.

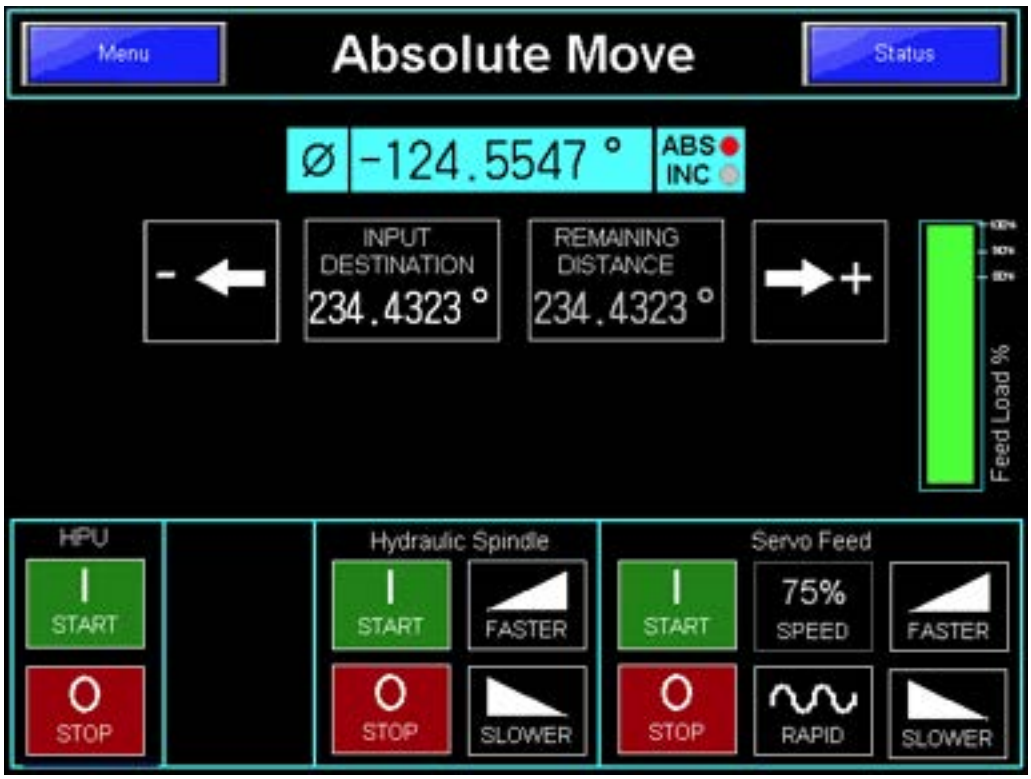

FIGURE 4-23. ÉCRAN DE DÉPLACEMENT ABSOLU

Les déplacements absolus sont relatifs à la position zéro absolue, qui peut être n'importe où sur la circonférence d'un cercle de 360 degrés. À ne pas confondre avec les déplacements incrémentaux, le déplacement absolu se déplace vers la destination saisie, dans la direction et à la vitesse saisies, par rapport à la position ZERO.

AVIS

En fonction de la configuration demandée des options de la CM6200, seules certaines fonctions seront activées et visibles. Par conséquent, certaines fonctions présentées ci-dessus peuvent ne pas être disponibles sur le boîtier de commande fourni.

4.2.7 Déplacement en vitesse incrémentale

L'écran de déplacement en vitesse incrémentale, illustré à la Figure 4-24, permet de contrôler le mouvement de la CM6200 en fonction du pourcentage de la vitesse

maximale.

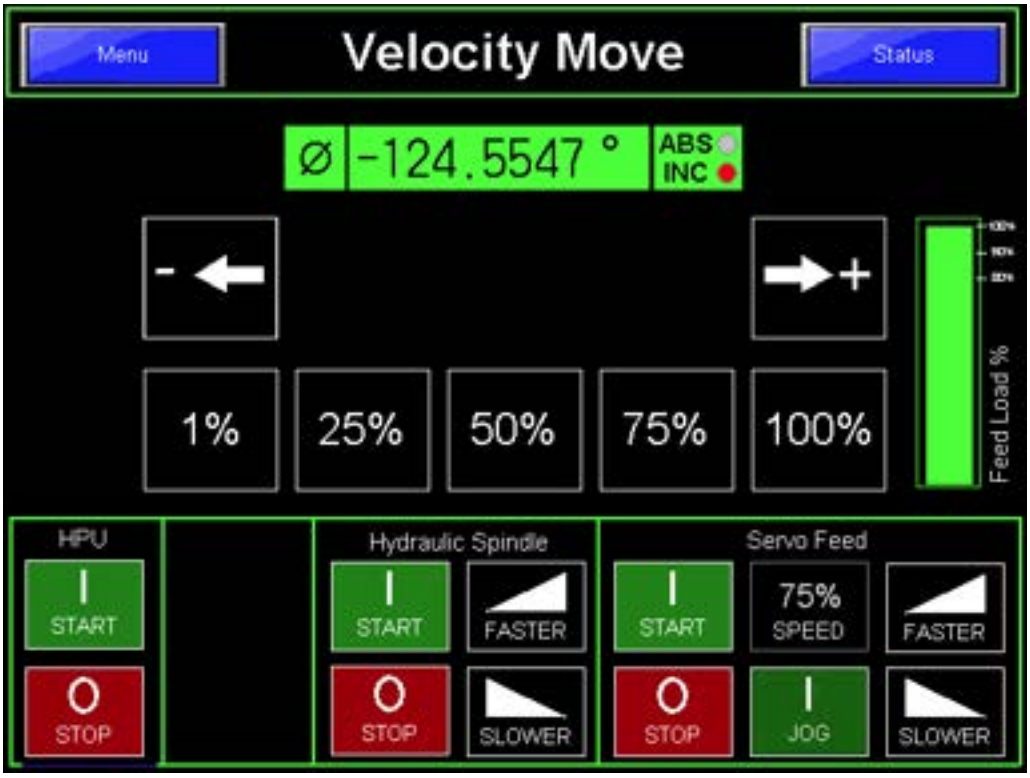

FIGURE 4-24. ÉCRAN DE DÉPLACEMENT EN VITESSE INCRÉMENTALE

Notez le code couleur et le point d'identification des écrans de déplacement en vitesse incrémentale par rapport aux écrans de déplacement en vitesse absolue. Pour passer à n'importe quelle position de manière incrémentale, maintenez le bouton de fonctionnement pas-à-pas (JOG) enfoncé ou touchez le bouton de démarrage.

⚠ AVERTISSEMENT

En fonction de la configuration demandée des options de la CM6200, seules certaines fonctions seront activées et visibles. Par conséquent, certaines fonctions présentées ci-dessus peuvent ne pas être disponibles sur le boîtier de commande fourni.

4.2.8 Déplacement en vitesse absolue

L'écran de déplacement en vitesse absolue, illustré à la Figure 4-25, permet de contrôler le mouvement de la CM6200 en fonction du pourcentage de la vitesse maxi-

male.

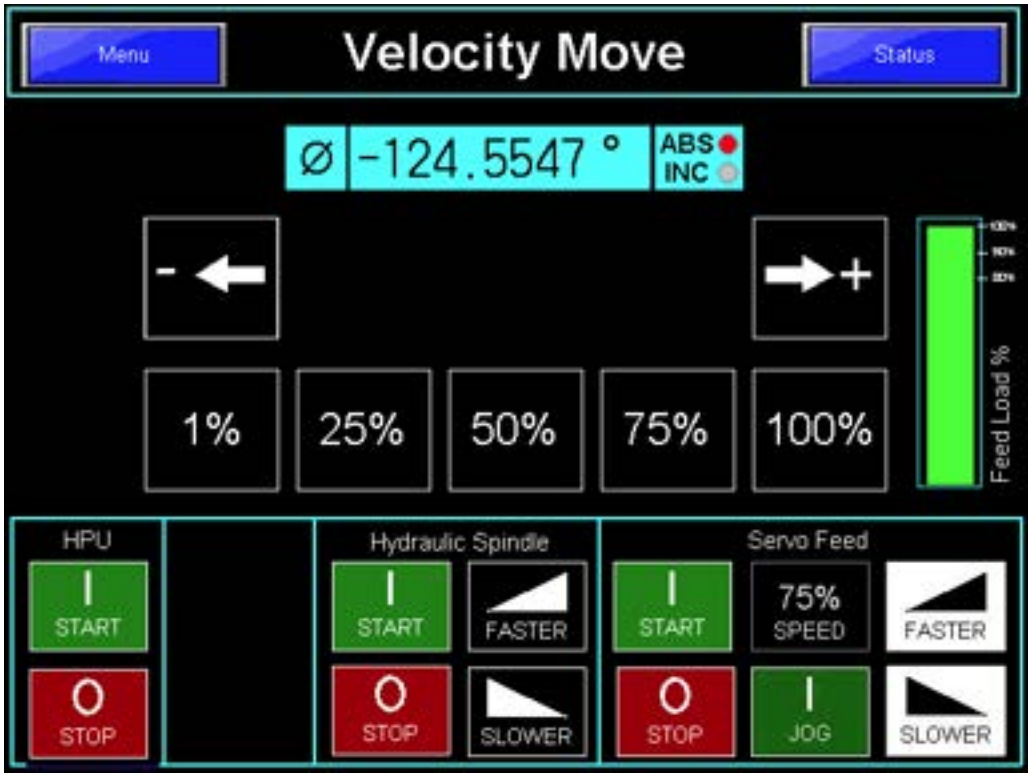

FIGURE 4-25. ÉCRAN DE DÉPLACEMENT EN VITESSE ABSOLUE

Notez la couleur et le point d'identification des coordonnées absolues. La fonction est la même que celle de l'écran incrémental, mais le déplacement se fera par rapport au zéro absolu.

AVIS

En fonction de la configuration demandée des options de la CM6200, seules certaines fonctions seront activées et visibles. Par conséquent, certaines fonctions présentées ci-dessus peuvent ne pas être disponibles sur le boîtier de commande fourni.

4.2.9 Écrans contextuels

Current Position may not be changed while moving

OK

Please enter a distance for this move.

OK

Please select a direction for this move.

OK

Machine must be stopped before changing operation mode.

OK

Machine must be stopped before changing machine setup

OK

Automatic Feed Reduction has reduce the feed rate to avoid overload fault

OK

Overload Fault Imminent

Feed Rate will be reduced by 456 %
in less than45.6 seconds.

OK

The system detects that the contactor for the hydraulic pump is not engaging.

An electrician must investigate.

The system detects the thermal overload relay protecting the HPU motor has tripped. Once the cause of the overload is corrected, the overload relay inside the electrical must be reset by a qualified technician.

The system detects that the Air Spindle is enabled, and supply air pressure is low.

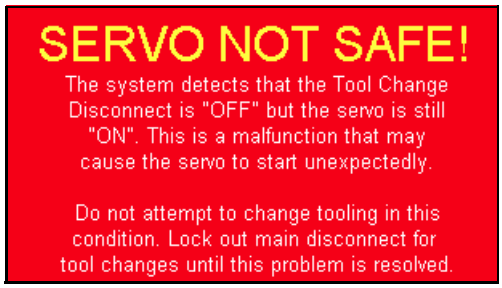

4.2.10 Écran d'historique des alarmes

4.2.11 Écran d'état

L'écran d'état, représenté à la Figure 4-26, indique l'état actuel des composants de la CM6200.

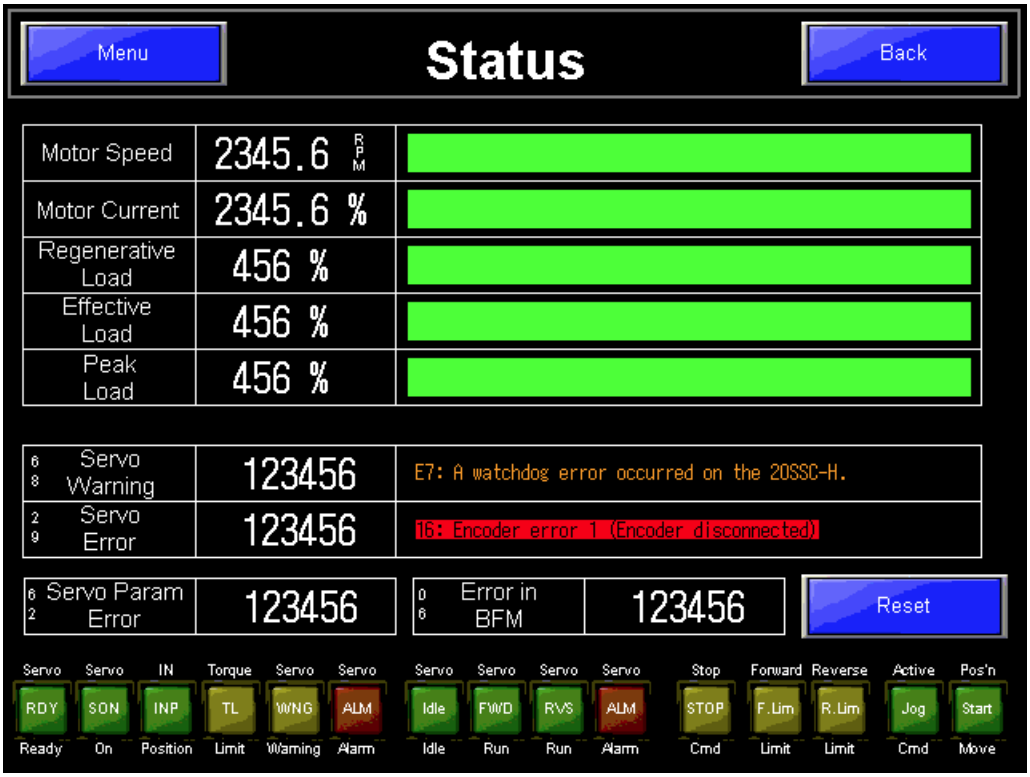

FIGURE 4-26. ÉCRAN D'ÉTAT

L'écran d'état n'est utilisé normalement que pour le dépannage ou lorsque vous contactez CLIMAX pour obtenir de l'aide sur des problèmes.

AVIS

En fonction de la configuration demandée des options de la CM6200, seules certaines fonctions seront activées et visibles. Par conséquent, certaines fonctions présentées ci-dessus peuvent ne pas être disponibles sur le boîtier de commande fourni.

4.2.12 Info Système

L'écran d'informations système, illustré à la Figure 4-27, affiche des informations concernant le fonctionnement et l'identification de la machine.

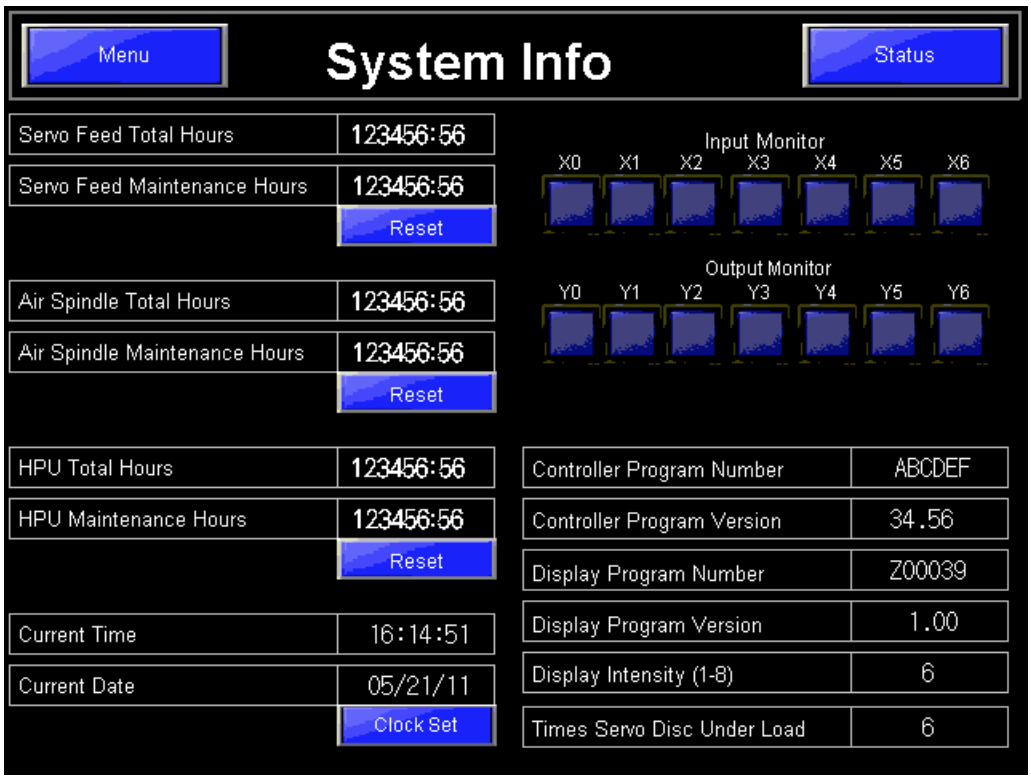

FIGURE 4-27. ÉCRAN D'INFORMATIONS SYSTÈME

AVIS

En fonction de la configuration demandée des options de la CM6200, seules certaines fonctions seront activées et visibles. Par conséquent, certaines fonctions présentées ci-dessus peuvent ne pas être disponibles sur le boîtier de commande fourni.

4.3 FRAISEUSE CIRCULAIRE

⚠ AVERTISSEMENT

Avant l'usinage, effectuez une inspection visuelle et un examen de la zone de réglage. Vérifier que toutes les mesures nécessaires ont été prises pour éviter tout blocage accidentel des pièces en rotation. Les obstructions dans l'usinage rotatif ou, l'ensemble de contrepoids et la tête de fraisage constituent un risque pour la sécurité des opérations d'usinage et peuvent entraîner des blessures graves, voire mortelles.

4.3.1 Installation de l’outil de découpe de la tête de fraisage

Procédez comme suit pour installer l’outil de coupe de la tête de fraisage :

1. Vérifiez que l’outil de coupe est aiguisé et sans entailles.
2. Vérifiez que la broche est complètement arrêtée et que la machine est verrouillée.
3. Nettoyez la saleté et les copeaux présents sur la surface du cône de la broche.
4. Insérez l’outil de coupe dans la broche. Vérifiez que l’outil de coupe est bien engagé dans les ergots d'entraînement.
5. Installez le boulon d’amarrage pour fixer l’outil de coupe dans la broche.

4.3.2 Réglage du DRO (équipement de la tête de fraisage)

Pour la plupart des opérations, il suffit d'allumer le compteur numérique et d'appuyer sur le bouton ZERO/ABS pour remettre à zéro l'affichage avant d'effectuer tout réglage sur la tête de fraisage. Le compteur numérique affichera les distances correctes sur l'écran numérique (voir la Figure 4-28).

FIGURE 4-28. BOUTONS ET AFFICHAGE DU DRO

4.3.3 Plages de fonctionnement sûres

Le Tableau 4-2 à la page 77 indique la surface en pieds par minute et en mètres standard par minute (smpm) pour un diamètre donné de l'outil et une taille de moteur hydraulique à 60 Hz et 20 gallons par minute (gpm) ou 76 litres par minute (lpm). Le Tableau 4-3 à la page 78 présente les mêmes informations à 50 Hz et à 16,6 gpm (63 lpm).

⚠ CAUTION

Ne choisissez pas une combinaison moteur/outil qui soit inférieure à 150 sfpm (45,72 smpm) à 20 gpm (76 lpm). La force maximale résultante sur l'outil de coupe pourrait endommager la machine. Il est acceptable de faire fonctionner un outil à moins de 150 sfpm (45,72 smpm), à condition qu'à 20 gpm (76 lpm), il soit supérieur à 150 sfpm (45,72 smpm).

Si l'opérateur choisit de faire fonctionner la machine au-delà des limites de conception, il le fait à ses propres risques et périls.

TABLEAU 4-2. CAPACITÉ SFPM/SMPM MAXIMALE DU MOTEUR HYDRAULIQUE À 60 HZ ET 20 GPM (76 LPM)

Diamètre d'outill-age	Tailles de moteur hydraulique en option							
	101,6 cm^3 (6,2 in^3)	131 cm^3 (8,0 in^3)	157,3 cm3 (9,6 in3)	195,0 cm^3 (11,9 in^3)	244,17 cm^3 (14,9 in^3)	18,7 in^3 (244,2 cm^3)	24,0 in^3 (393,3 cm^3)	488,3 cm^3 (29,8 in^3)
1" (25 mm)	194 sfpm (59,1 smpm)	151 sfpm (46 smpm)	125 sfpm (38,1 smpm)	101 sfpm (30,8 smpm)	81 sfpm (24,7 smpm)	64 sfpm (24,7 smpm)	50 sfpm (15,2 smpm)	40 sfpm (12,2 smpm)
2" (51 mm)	389 sfpm (118,6 smpm)	302 sfpm (92,1 smpm)	250 sfpm (76,2 smpm)	202 sfpm (61,6 smpm)	161 sfpm (49,1 smpm)	129 sfpm (39,3 smpm)	100 sfpm (30,5 smpm)	80 sfpm (24,4 smpm)
4" (102 mm)	777 sfpm (236,8 smpm)	603 sfpm (183,8 smpm)	500 sfpm (152,4 smpm)	403 sfpm (122,8 smpm)	323 sfpm (98,5 smpm)	258 sfpm (78,6 smpm)	200 sfpm (61,0 smpm)	160 sfpm (48,8 smpm)
5" (127 mm)	971 sfpm (296,0 smpm)	754 sfpm (229,8 smpm)	624 sfpm (190,2 smpm)	504 sfpm (153,6 smpm)	403 sfpm (122,8 smpm)	322 sfpm (98,2 smpm)	250 sfpm (76,2 smpm)	200 sfpm (61,0 smpm)
6" (152 mm)	1 166 sfpm (355,4 smpm)	905 sfpm (275,8 smpm)	749 sfpm (228,3 smpm)	605 sfpm (184,4 smpm)	484 sfpm (147,5 smpm)	386 sfpm (117,7 smpm)	300 sfpm (91,4 smpm)	240 sfpm (73,2 smpm)
8" (203 mm)	1 554 sfpm (473,7 smpm)	1 206 sfpm (367,6 smpm)	905 sfpm (275,8 smpm)	806 sfpm (245,7 smpm)	645 sfpm (196,6 smpm)	515 sfpm (157,0 smpm)	400 sfpm (121,9 smpm)	320 sfpm (97,5 smpm)
10" (254 mm)	1 943 sfpm (592,2 smpm)	1 508 sfpm (459,6 smpm)	1 206 sfpm (367,6 smpm)	1 008 sfpm (307,2 smpm)	806 sfpm (245,7 smpm)	644 sfpm (196,3 smpm)	500 sfpm (152,4 smpm)	401 sfpm (122,2 smpm)

TABLEAU 4-3. CAPACITÉ SFPM/SMPM MAXIMALE DU MOTEUR HYDRAULIQUE À 50 HZ ET 16,6 GPM (63 LPM)

Diamètre d'outill-age	Tailles de moteur hydraulique en option							
	131 cm^3 (8,0 in^3)	157,3 cm3 (9,6 in3)	195,0 cm^3 (11,9 in^3)	244,17 cm^3 (14,9 in^3)	18,7 in^3 (244,2 cm^3)	24,0 in^3 (393,3 cm^3)	488,3 cm^3 (29,8 in^3)	101,6 cm^3 (6,2 in^3)
1" (25 mm)	161 sfpm (49,1 smpm)	125 sfpm (38,1 smpm)	104 sfpm (31,7 smpm)	84 sfpm (25,6 smpm)	67 sfpm (20,4 smpm)	53 sfpm (16,2 smpm)	41 sfpm (12,5 smpm)	33 sfpm (10,1 smpm)
2" (51 mm)	323 sfpm (98,5 smpm)	251 sfpm (76,5 smpm)	208 sfpm (63,4 smpm)	168 sfpm (51,2 smpm)	134 sfpm (40,8 smpm)	108 sfpm (32,9 smpm)	83 sfpm (25,3 smpm)	66 sfpm (20,1 smpm)
4" (102 mm)	645 sfpm (196,6 smpm)	500 sfpm (152,4 smpm)	415 sfpm (126,49 smpm)	334 sfpm (101,8 smpm)	268 sfpm (81,7 smpm)	214 sfpm (65,2 smpm)	166 sfpm (50,6 smpm)	133 sfpm (40,5 smpm)
5" (127 mm)	806 sfpm (245,7 smpm)	626 sfpm (109,8 smpm)	518 sfpm (157,9 smpm)	418 sfpm (127,4 smpm)	334 sfpm (101,8 smpm)	267 sfpm (81,4 smpm)	208 sfpm (63,4 smpm)	166 sfpm (50,6 smpm)
6" (152 mm)	968 sfpm (295,1 smpm)	751 sfpm (228,9 smpm)	622 sfpm (189,6 smpm)	502 sfpm (153,0 smpm)	402 sfpm (122,5 smpm)	320 sfpm (97,5 smpm)	249 sfpm (75,9 smpm)	199 sfpm (60,7 smpm)
8" (203 mm)	1 290 sfpm (393,2 smpm)	1 001 sfpm (305,1 smpm)	751 sfpm (228,9 smpm)	669 sfpm (203,9 smpm)	535 sfpm (163,1 smpm)	427 sfpm (130,2 smpm)	332 sfpm (101,2 smpm)	266 sfpm (81,1 smpm)
10" (254 mm)	1 613 sfpm (491,6 smpm)	1 252 sfpm (381,6 smpm)	1 001 sfpm (305,1 smpm)	837 sfpm (255,1 smpm)	669 sfpm (203,9 smpm)	551 sfpm (167,9 smpm)	415 sfpm (126,5 smpm)	333 sfpm (101,5 smpm)

Les couleurs indiquées correspondent aux définitions du Tableau 4-4.

TABLEAU 4-4. DÉFINITION DES COULEURS DE LA PLAGE DE FONCTIONNEMENT

SFPM/SMPM	Définition
150 sfpm (45,7 smpm)	Ne pas faire fonctionner
150 à 250 sfpm (45,7 à 76,2 smpm)	Apte au fonctionnement
250 à 500 sfpm (76,2 à 152,4 smpm)	Plage de fonctionnement optimale
>500 sfpm (152,4 smpm)	Apte au fonctionnement

4.3.4 Remplacement de l'ensemble de fraisage

Procédez comme suit pour remplacer l'ensemble de fraisage par l'ensemble de tête d'outil à point unique :

1. Mettez complètement hors tension et verrouillez la source d'alimentation.
2. Retirez l'ensemble de la tête de fraisage, y compris la plaque d'adaptation de la tête de fraisage, de la plaque à glissière latérale (voir la Figure 4-38, qui est également représentée à la Figure A-11 à la page 130).
3. Fixez l'ensemble de tête d'outil à point unique (Réf. 62984) à la plaque à glissière latérale.

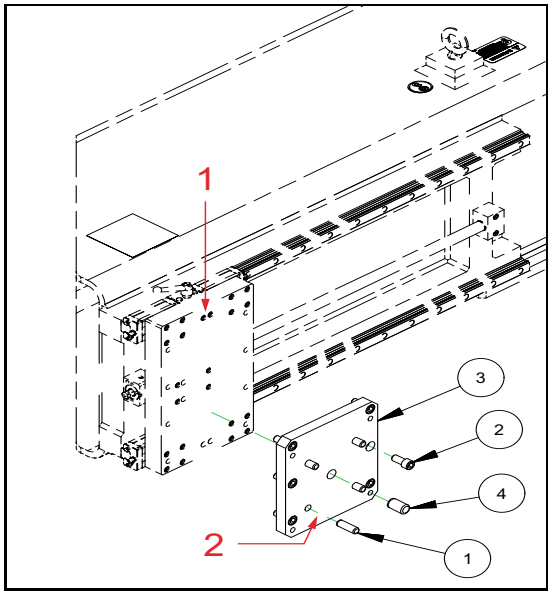

FIGURE 4-29. PLAQUE À GLISSIÈRE LATÉRALE

TABLEAU 4-5. IDENTIFICATION DE LA PLAQUE À GLISSIÈRE LATÉRALE

Numéro	Composant
1	Plaque du chariot
2	Plaque d'adaptation de la tête de fraisage

4. Fixez l'ensemble de tête de fraisage à l'adaptateur (voir la Figure 4-39, illustré à la Figure A-27 à la page 146).

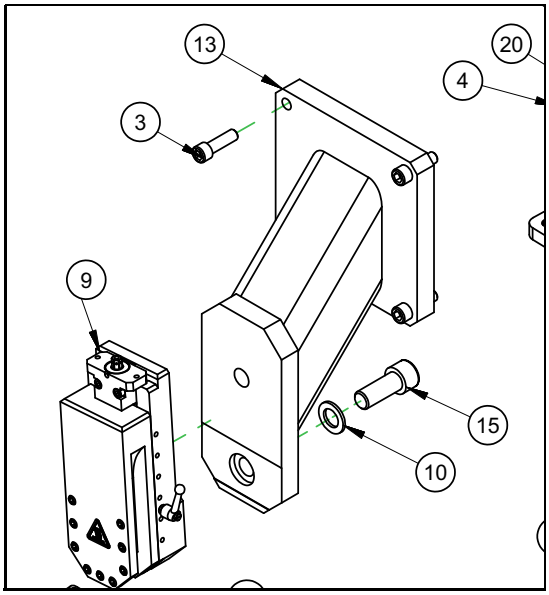

FIGURE 4-30. ADAPTATEUR DE L'ENSEMBLE DE TÊTE D'OUTIL

4.3.5 Exécution d’un fraisage circulaire

L'usinage dans les deux sens est possible avec une fraise à surfacer sur les brides générales. Il est recommandé d'effectuer une passe dans une direction et la suivante dans la direction opposée.

⚠ CAUTION

Si les conditions ou l'outillage exigent que toutes les passes soient effectuées dans une seule direction, retirez la broche à la fin de chacune des passes et inversez la table pour éviter une torsion excessive et le pliage des tuyaux et des câbles électriques.

Pour effectuer un fraisage circulaire, procédez comme suit :

1. Réglez la broche sur la pièce à usiner jusqu'au point de départ souhaité.
2. Réglez la vitesse de la table rotative sur zéro.
3. Démarrez le plateau rotatif et réglez une vitesse souhaitée pour le fraisage.
4. Arrêtez la table.
5. Faites avancer la broche vers la pièce jusqu'à ce que l’outil de coupe entre juste en contact avec la surface. Remettez le compteur numérique à zéro.
6. Faites avancer la broche en l'éloignant de la pièce de manière à ce qu'elle ne soit plus au-dessus de la surface qui sera usinée.
7. Réglez la broche pour définir la profondeur de coupe souhaitée.
8. Mettez l'appareil sous tension et faites tourner la broche.
9. Faites avancer radialement l’outil de coupe dans la pièce à l'aide de l'alimentation de l'axe radial.
10. Lorsque l’outil de coupe est complètement engagé dans la pièce, lancez la rotation de la table rotative.

⚠ CAUTION

N'arrêtez jamais la broche avant que la table rotative ne soit complètement arrêtée. L'arrêt de la broche avant l'arrêt de la table rotative endommagera la machine.

ASTUCE :

Il peut être nécessaire de retirer les pattes de réglage lors du fraisage.

⚠ DANGER

Le fait de retirer les pattes de réglage de la machine réduit sa stabilité. Assurez-vous que la machine est fixée sur la pièce à usiner conformément aux spécifications indiquées à la Section 3.4 à la page 25 avant de retirer les pattes de réglage.

11. Réglez le bouton de contrôle de la vitesse sur le boîtier jusqu'à ce que le plateau tournant tourne à la vitesse nécessaire.

AVERTISSEMENT

Pour vous protéger des copeaux et du bruit intense, portez des protections oculaires et auditives lorsque vous utilisez la machine.

12. Pour arrêter la rotation de la machine, appuyez sur le bouton d'arrêt du boîtier de commande de la fraiseuse circulaire.
13. Répétez les passes de coupe selon les besoins. Pour des finitions très fines, effectuez plusieurs coupes d'ébauche et une coupe de finition fine.

Éloignez radialement l'outil de coupe de la pièce entre les coupes ou lorsque la coupe est terminée.

4.4 OPTION DE RECTIFICATION

4.4.1 Installation de l’équipement de meulage

L'accessoire de meulage utilise le même adaptateur de montage que l'option d'outil à point unique. Consultez les vues éclatées (Figure A-16 à la page 135, Figure A-17 à la page 136, ou Figure A-18 à la page 137) pour plus d'informations sur les pièces nécessaires au meulage.

Procédez comme suit pour configurer l’accessoire de meulage :

1. Installez la machine dans la bride, conformément aux instructions de montage de la Section 3.4 à la page 25.
2. Installez la tête de meulage sur le bras (voir la Section 4.5.2 à la page 90 pour les instructions de remplacement de la tête de fraisage).
3. Utilisez les vis fournies pour fixer la meuleuse sur la face de la tête de l'outil.
4. Fixez les tuyaux de l'accessoire de meulage à la PCU.

AVIS

N'effectuez que deux ou trois passes maximum dans un sens ou dans l'autre. Inversez ensuite le sens pour éviter de coincer les tuyaux.

5. Réglez les vis de nivellement jusqu'à obtenir l'angle de meulage désiré (Figure 4-31).
6. Utilisez la vis de réglage de hauteur sur la tête de meulage pour régler la hauteur.
7. Assurez-vous que la protection est en place et que toutes les fixations sont bien serrées.

FIGURE 4-31. VIS DE NIVELLEMENT DE LA TÊTE DE MEULAGE

4.4.2 Fonctionnement

Le meulage doit être effectué après que la bride a été coupée nettement avec un outil à point unique ou la tête de fraisage.

1. Activez la tête de meulage et accélérez jusqu'à la vitesse de fonctionnement désirée.
2. Appliquez la broche pour toucher la surface et meuler légèrement.
3. Vérifier la finition de surface.
4. Faire les ajustements nécessaires aux réglages de la meuleuse.
5. Lorsque la finition est satisfaisante, continuer à meuler la surface si nécessaire.

⚠ AVERTISSEMENT

Ne vous approchez pas de la meuleuse pendant son fonctionnement. Des copeaux de métal peuvent être projetés en l'air par la meuleuse. Portez toujours des lunettes de protection et des protections auditives pour utiliser la machine.

6. Lorsque l'opération de meulage est terminée, soulevez la broche et désactivez la meuleuse.

4.5 OPTION DE POINT UNIQUE

Comme le montre la Figure 4-32 à la page 84, l'option de point unique nécessite un adaptateur et un ensemble de tête d'outil, ainsi que les systèmes pneumatiques pour le contrôle de l'alimentation. Cet adaptateur se monte directement sur le bras de l'outil existant. Consultez la Figure 4-33 à la page 85 et la Figure 4-34 à la page 86.

Pour l'assemblage du support de moteur hydraulique, consultez la Section 4.5.3 à la page 91.

La PCU alimente en air la boîte d'alimentation pneumatique par l'intermédiaire du raccord rotatif.

Le porte-outil à point unique se monte sur la plaque du chariot du bras rotatif à la place de la tête de fraisage. Consultez la Section 4.5.2 à la page 90.

La boîte d'alimentation pneumatique et l'adaptateur se montent sur l'extrémité de la vis à billes du bras rotatif.

L'ensemble du raccord rotatif se monte au centre de la table rotative et transmet le fluide au moteur hydraulique et l'air à la boîte d'alimentation. Consultez la Section 4.5.3 à la page 91. La vanne d'air qui fait fonctionner la boîte d'alimentation est également située ici.

La procédure d'arrêt d'urgence se trouve à la Section 5.2.1 à la page 98.

4.5.1 Configuration du raccord rotatif pour un montage sur DI ou DE

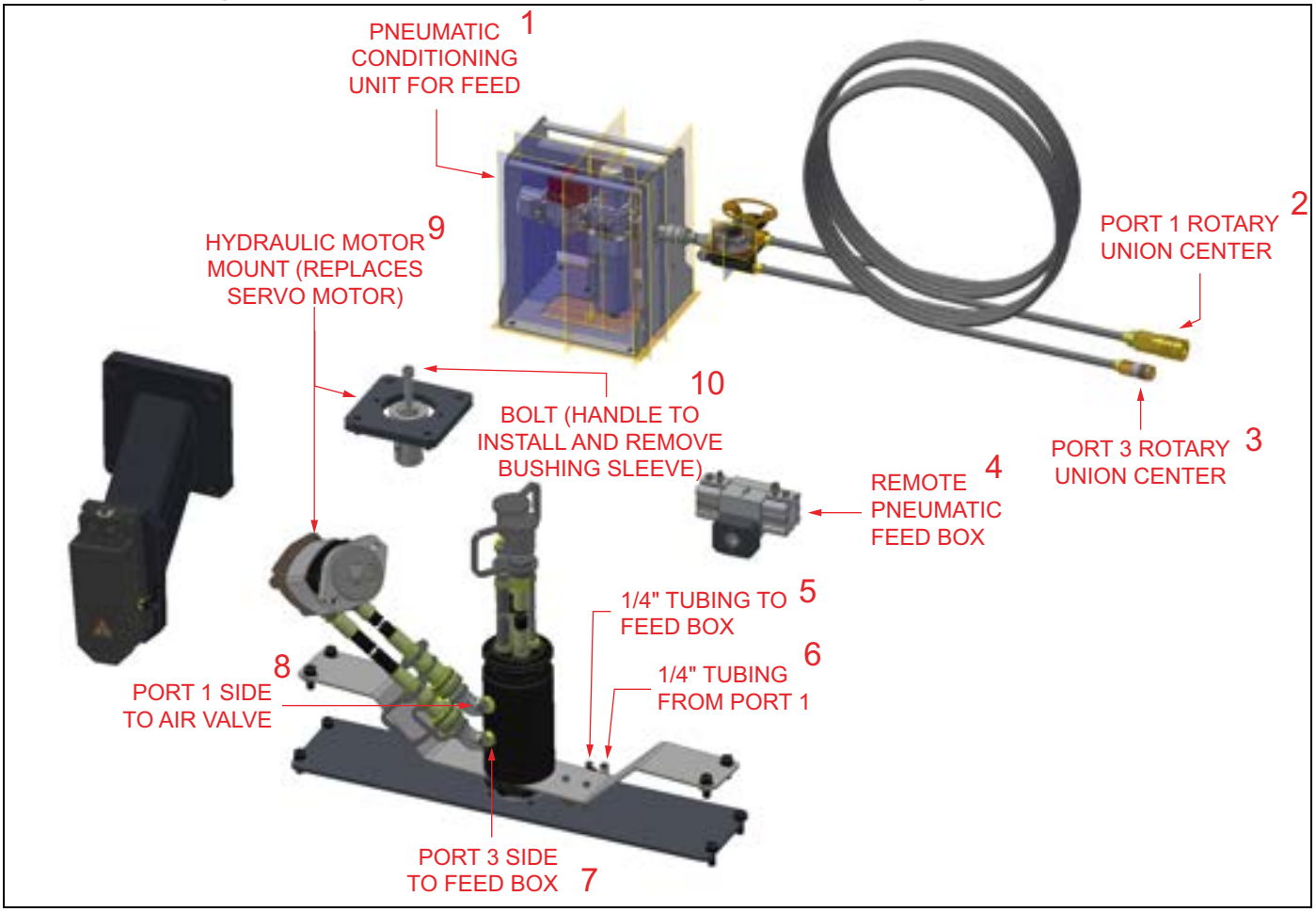

FIGURE 4-32. COMPOSANTS DE CONFIGURATION DU RACCORD ROTATIF

TABLEAU 4-6. IDENTIFICATION DES COMPOSANTS DE CONFIGURATION DU RACCORD ROTATIF

Numéro	Composant
1	Unité de conditionnement pneumatique pour alimentation
2	Centre de raccord rotatif - port 1
3	Centre de raccord rotatif - port 3
4	Boîte d'alimentation pneumatique à distance (voir la Figure 4-33 à la page 85 et Figure 4-34 à la page 86 pour plus de détails)
5	Tuyau 1/4" vers la boîte d'alimentation
6	Tuyau 1/4" depuis l'orifice 1
7	Côté du port 3 vers la boîte d'alimentation
8	Côté du port 1 vers la soupape d'air

TABLEAU 4-6. IDENTIFICATION DES COMPOSANTS DE CONFIGURATION DU RACCORD ROTATIF

Numéro	Composant
9	Support du moteur hydraulique (remplace le servomoteur)
10	Boulon (poignée pour installer et retirer le manchon de la bague)

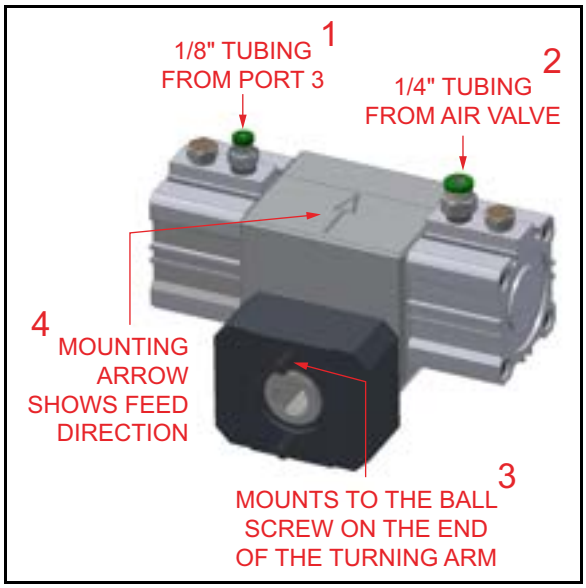

FIGURE 4-33. DÉTAIL DE LA BOÎTE D'ALIMENTATION

TABLEAU 4-7. IDENTIFICATION DES DÉTAILS DE LA BOÎTE D'ALIMENTATION

Numéro	Composant
1	Tuyau 1/8" depuis le port 3
2	Tuyau 1/4" depuis la soupape d'air
3	Se monte sur la vis à bille à l'extrémité du bras rotatif
4	La flèche de montage indique le sens de l'alimentation

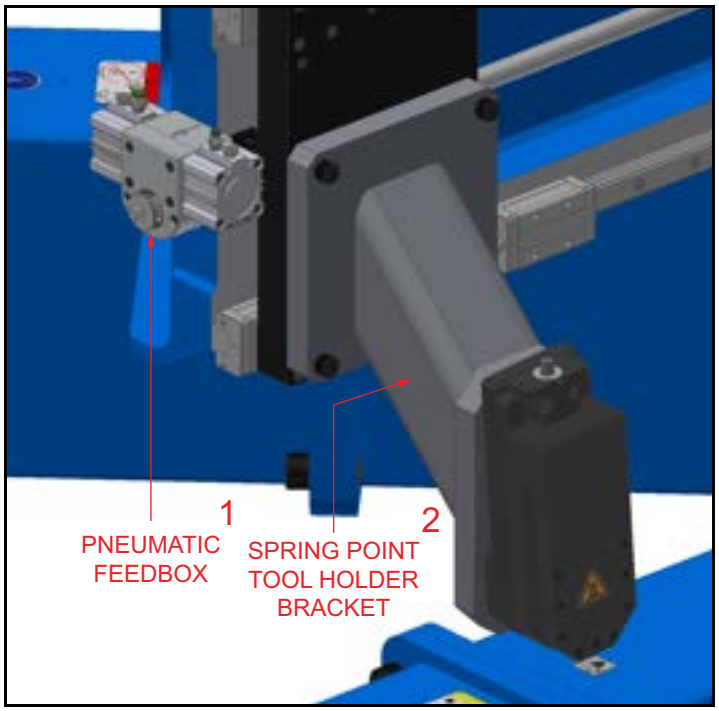

FIGURE 4-34. EMPLACEMENT DE LA BOÎTE D'ALIMENTATION PNEUMATIQUE

TABLEAU 4-8. IDENTIFICATION DE LA BOÎTE D'ALIMENTATION PNEUMATIQUE

Numéro	Composant
1	Boîte d'alimentation pneumatique
2	Support de porte-outil à ressort

4.5.1.1 Configuration de montage sur DI

La Figure 4-35 montre une vue éclatée de la configuration du raccord rotatif pour un montage sur DI. Consultez la Figure A-31 à la page 150 pour l'identification des pièces numérotées.

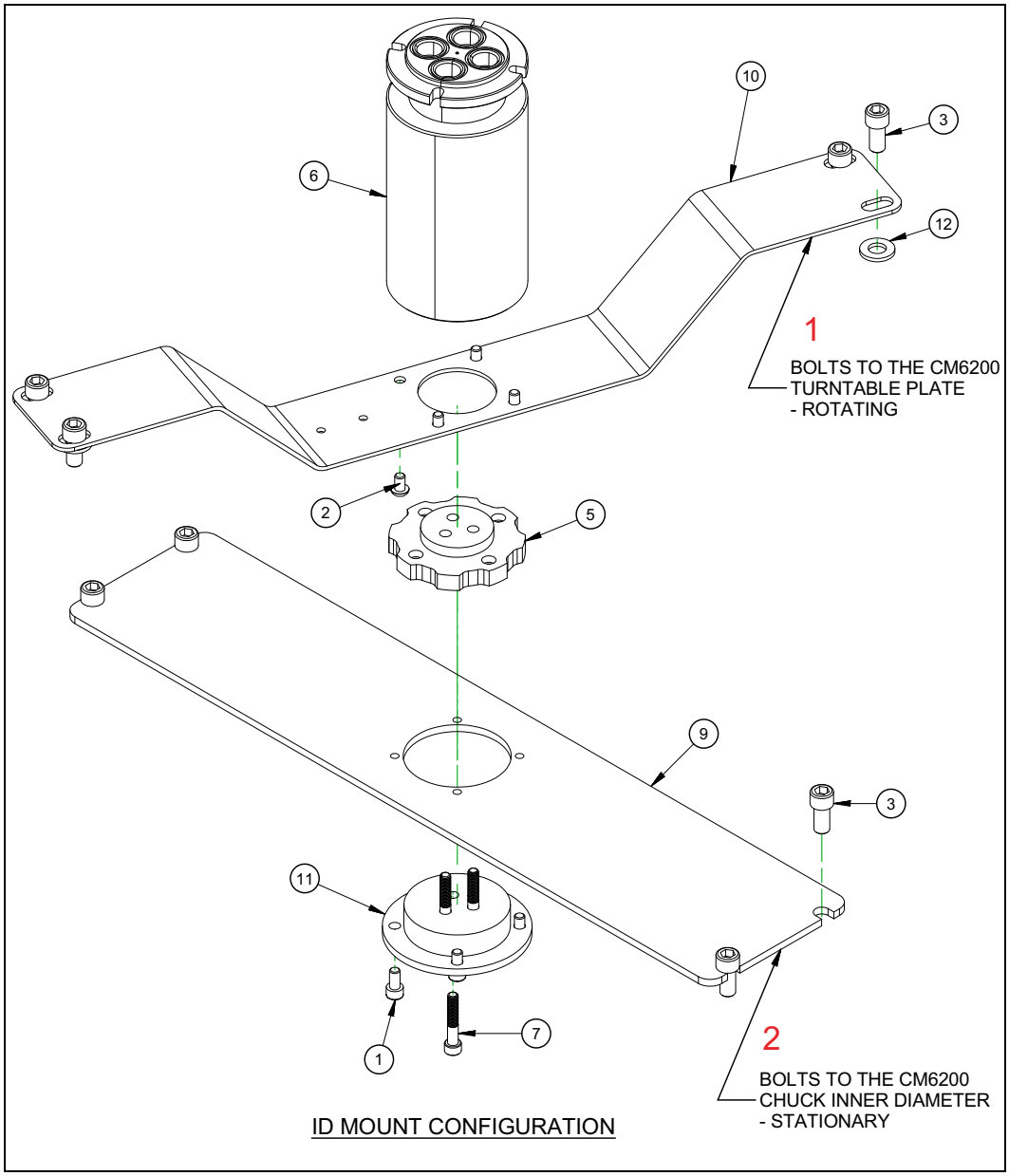

FIGURE 4-35. CONFIGURATION DU MONTAGE SUR DI POUR LE RACCORD ROTATIF

TABLEAU 4-9. IDENTIFICATION DE LA CONFIGURATION DU MONTAGE SUR DI

Numéro	Composant
1	Se visse sur la plaque du plateau tournant CM6200 (rotatif)
2	Se visse sur le diamètre intérieur du mandrin CM6200 (fixe)

Procédez comme suit pour configurer le raccord rotatif pour un montage sur DI, en vous référant à la Figure 4-35 :

1. Vissez le bras de retenue du couple à la plaque du plateau tournant CM6200. Il tournera avec la machine.
2. Vissez le support du raccord rotatif au diamètre intérieur du mandrin CM6200. Il restera fixe.

4.5.1.2 Configuration du montage sur DE

La Figure 4-36 montre les pièces utilisées pour configurer le montage sur DE du raccord rotatif. Consultez la Figure A-31 à la page 150 pour l'identification des pièces.

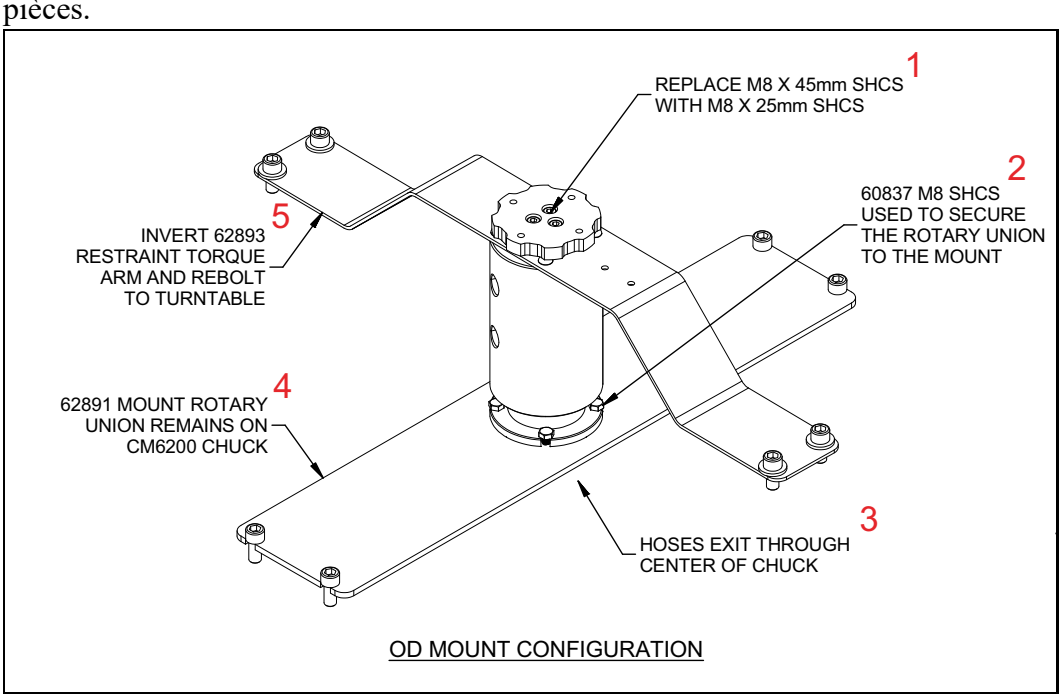

FIGURE 4-36. CONFIGURATION DU MONTAGE SUR DE DU RACCORD ROTATIF

TABLEAU 4-10. IDENTIFICATION DE LA CONFIGURATION DU MONTAGE SUR DE

Numéro	Composant
1	Remplacez les vis SHCS M8 x 45 mm par des vis SHCS M8 x 25 mm
2	Vis SHCS M8 réf. 60837 utilisées pour fixer le raccord rotatif au support
3	Les tuyaux sortent par le centre du mandrin
4	Le raccord rotatif de montage réf. 62891 reste sur le mandrin CM6200
8	Inversez le bras de couple de retenue, réf. 62893, et vissez-le de nouveau au plateau tournant

Procédez comme suit pour configurer le raccord rotatif pour un montage sur DI en vous référant à la Figure 4-37 :

1. Remplacez les vis SHCS M8 x 45 mm par des vis SHCS M8 x 25 mm. Gardez la même came en place.
2. Inversez le bras de retenue du couple et vissez-le à nouveau au plateau tournant.
3. Fixez le raccord rotatif au support avec les vis SHCS M8 (Réf. 55799). Le support du raccord rotatif reste sur le mandrin CM6200.

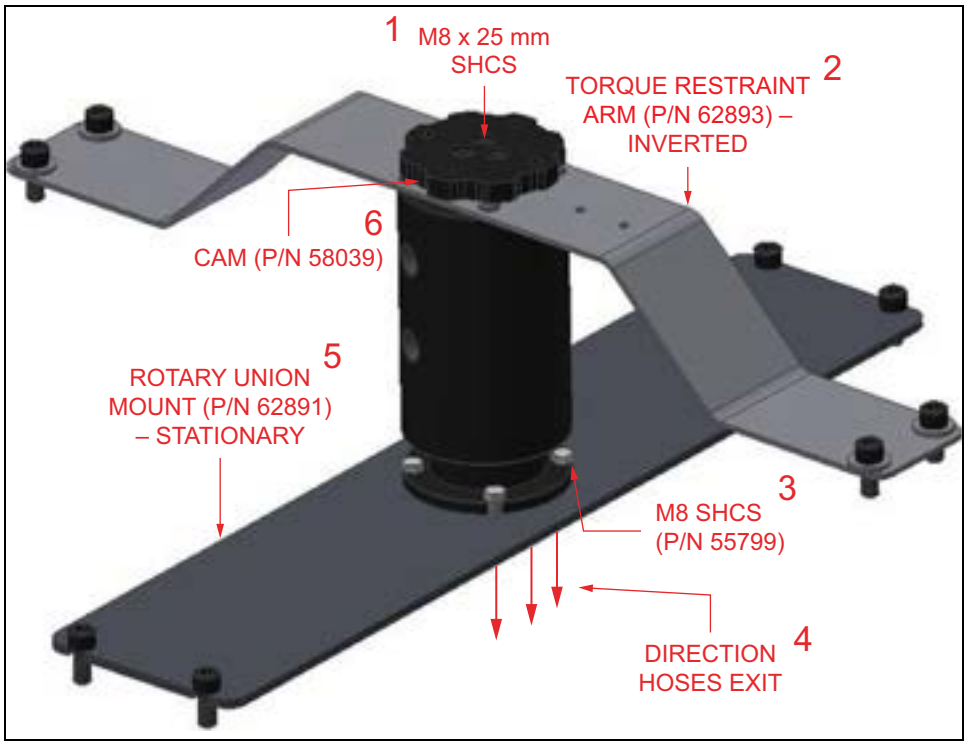

FIGURE 4-37. CONFIGURATION DU RACCORD ROTATIF POUR MONTAGE SUR DE

TABLEAU 4-11. IDENTIFICATION DE LA CONFIGURATION DU RACCORD ROTATIF POUR MONTAGE SUR DE

Numéro	Composant
1	Vis à tête creuse hexagonale M8 x 25 mm (SHCS)
2	Bras de retenue du couple (Réf. 62893) - inversé
3	Vis SHCS M8 (Réf. 55799)
4	Direction de sortie des tuyaux
5	Support du raccord rotatif (Réf.62891) - fixe
6	Came (Réf. 58039)

4.5.2 Remplacement de l’ensemble de fraisage

Procédez comme suit pour remplacer l'ensemble de fraisage par l'ensemble de tête d'outil à point unique :

1. Mettez complètement hors tension et verrouillez la source d'alimentation.
2. Retirez l'ensemble de la tête de fraisage, y compris la plaque d'adaptation de la tête de fraisage, de la plaque à glissière latérale (voir la Figure 4-38, qui est également représentée à la Figure A-11 à la page 130).
3. Fixez l'ensemble de tête d'outil à point unique (Réf. 62984) à la plaque à glissière latérale.

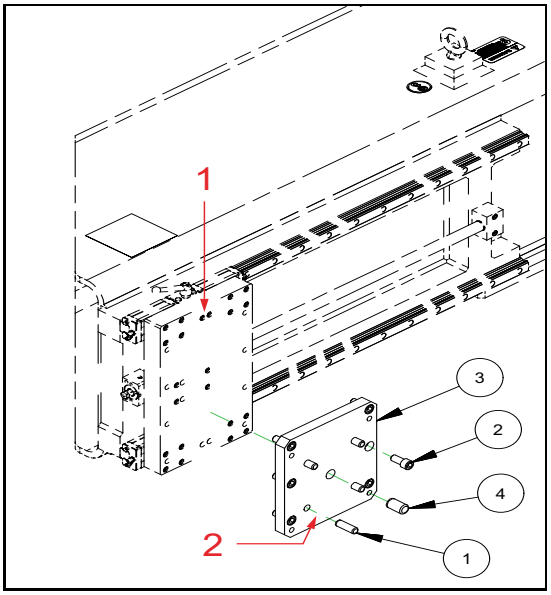

FIGURE 4-38. PLAQUE À GLISSIÈRE LATÉRALE

TABLEAU 4-12. IDENTIFICATION DE LA PLAQUE À GLISSIÈRE LATÉRALE

Numéro	Composant
1	Plaque du chariot
2	Plaque d'adaptation de la tête de fraisage

4. Fixez l'ensemble de tête de fraisage à l'adaptateur (voir la Figure 4-39, illustré à la Figure A-27 à la page 146).

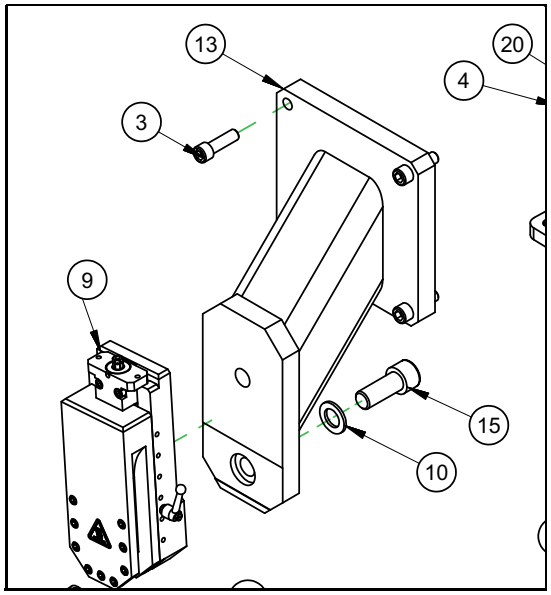

FIGURE 4-39. ADAPTATEUR DE L’ENSEMBLE DE TÊTE D’OUTIL

4.5.3 Installation de l'entraînement hydraulique en configuration à point unique

Procédez comme suit pour installer l'entraînement hydraulique en configuration à point unique pour le surfaçage des brides :

1. Mettez complètement hors tension et verrouillez la source d'alimentation.
2. Déposez le servomoteur et le réducteur planétaire (voir la Figure 4-40).
3. Installez le moteur hydraulique avec un arbre d'entraînement d'adaptation et une plaque d'adaptation sur le pignon annulaire principal. Lors du choix de la taille du moteur, consultez le Tableau 2-1 à la page 13 pour les vitesses du moteur hydraulique.

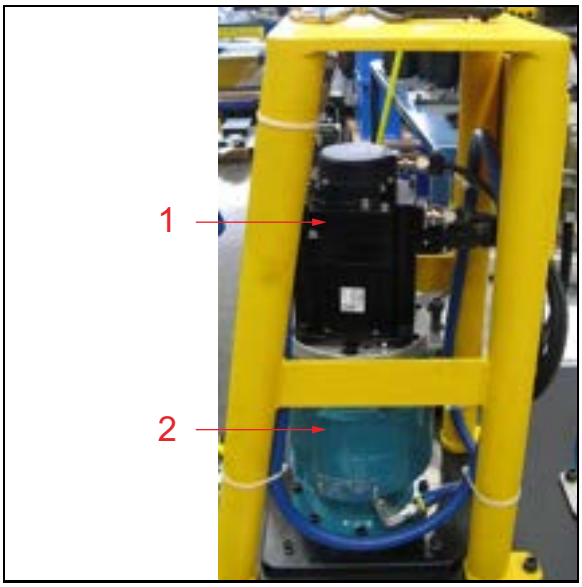

FIGURE 4-40. SERVOMOTEUR ET RÉDUCTEUR

TABLEAU 4-13. IDENTIFICATION DU SERVOMOTEUR ET DU RÉDUCTEUR

Numéro	Composant
1	Servomoteur
2	Réducteur

4. Montez un raccord rotatif sur la machine (voir la Figure 4-41).
5. Faites passer des tuyaux de la HPU et de la PCU au raccord rotatif, et de là au moteur hydraulique et à la boîte d'alimentation pneumatique (voir les figures de la Section 4.5.1 à la page 84).

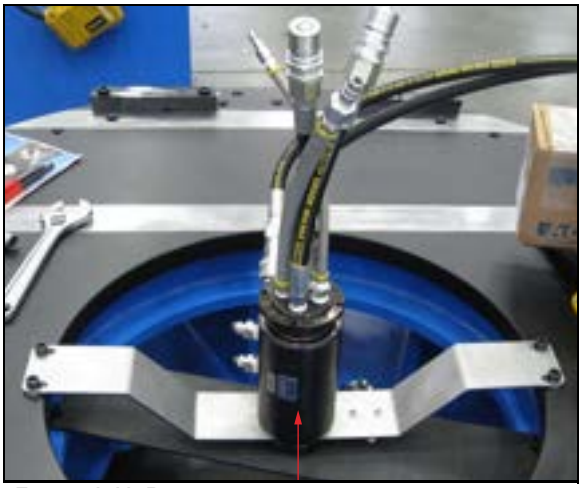
FIGURE 4-41. RACCORD ROTATIF

AVIS

Le servomoteur doit être connecté à la HPU, mais pas fixé à la machine. Vous risquez d'endommager le servomoteur si le moteur est déconnecté lors de la mise sous tension de la HPU.

Voir Section 4.5 à la page 83 pour savoir comment installer la boîte d'alimentation pneumatique et la plaque d'adaptation sur l'extrémité du bras d'usinage.

4.5.4 Installation de la boîte d'alimentation

La boîte d'alimentation est équipée d'un dispositif de réglage à distance de la boîte d'alimentation au niveau de la vanne d'arrêt d'air. Tous les ajustements de la vitesse d'avance sont effectués à partir de ce point. Les conduites d'alimentation en air vers le boîtier d'avance sont fournies en deux tailles : 0,25" (6,35 mm) et 0,125" (3,175 mm). Cela permet d'éviter une permutation accidentelle des tuyaux.

Procéder comme suit pour installer la boîte d'alimentation :

1. Installez l'ensemble de l'adaptateur de la boîte d'alimentation (Réf. 62994, voir Figure 4-42) sur l'extrémité du bras de rotation en le vissant avec les deux vis SHCS M6 x 1,0 x 30 mm.
2. Prenez l'ensemble de la boîte d'alimentation pneumatique (Réf. 58671) et montez-le sur l'ensemble de l'adaptateur de boîte d'alimentation en le vissant avec les deux vis SHCS M6 x 1.0 x 60 mm.

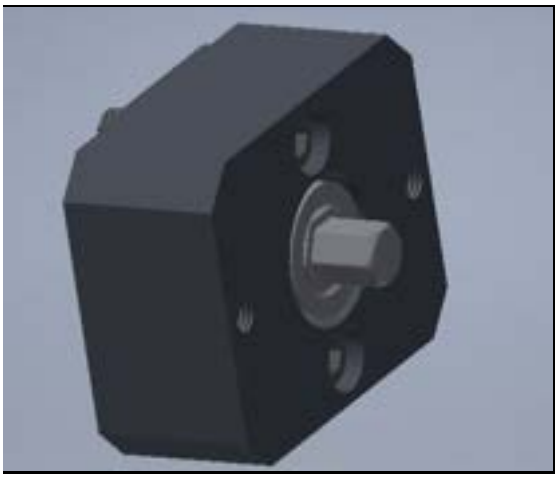

FIGURE 4-42. ADAPTATEUR DE BOÎTE D'ALIMENTATION PNEUMATIQUE

Lors du montage, vérifiez que la flèche est dirigée dans le sens d'alimentation prévue (voir la Figure 4-43.)

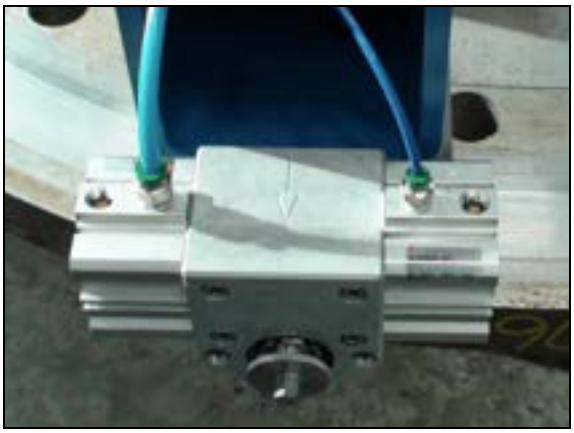

FIGURE 4-43. SENS D'ALIMENTATION DE LA BOÎTE D'ALIMENTATION

4.5.5 Inversion du sens de la boîte d'alimentation

Le boîtier d'alimentation n'avance que dans un sens, sans modification de la configuration.

Pour inverser le sens de la boîte d'alimentation, procédez comme suit :

1. Déposez l'arbre d'alimentation et les deux boulons le reliant au bras (Figure 4-44).

FIGURE 4-44. DÉPOSE DES BOULONS POUR INVERSER LE SENS DE L'ALIMENTATION

ASTUCE :

Le fait de débrancher et de changer les tuyaux n'inversera PAS le sens de l'alimentation.

2. Faites tourner le boîtier d'alimentation jusqu'à ce que la flèche soit dirigée dans le sens d'alimentation souhaité.
3. Réinstallez les boulons et l'arbre d'avance.

Cette boîte d'alimentation a deux modes, engagé et désengagé (neutre), comme le montre la Figure 4-45.

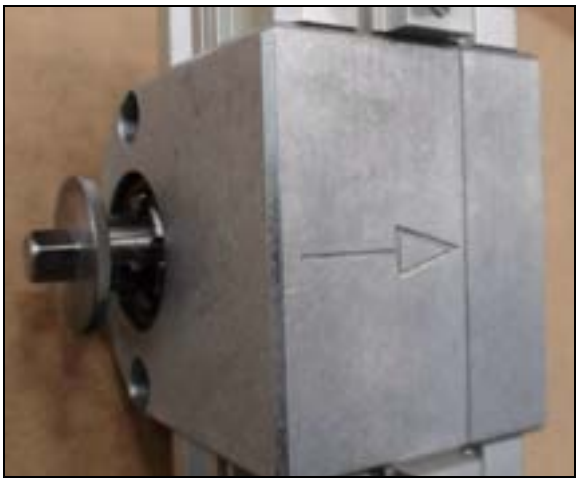

FIGURE 4-45. FLÈCHE DE DIRECTION DE L'ALIMENTATION

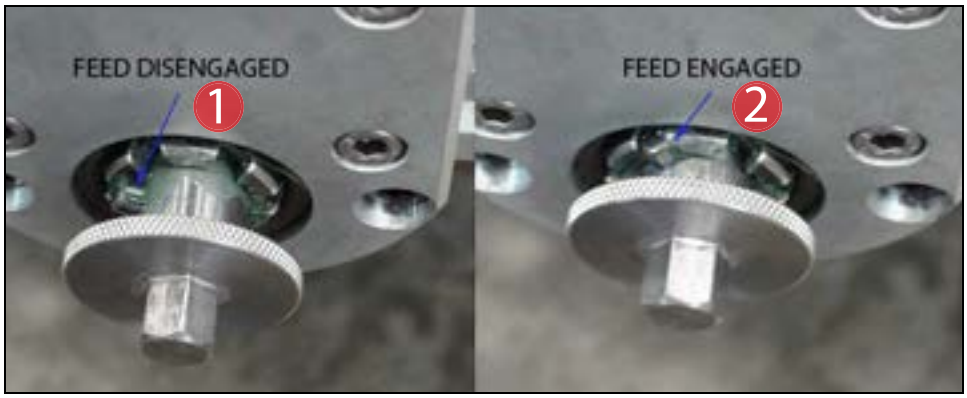

FIGURE 4-46. POSITIONS DU MODE DE LA BOÎTE D'ALIMENTATION

TABLEAU 4-14. IDENTIFICATION DU MODE DE LA BOÎTE D'ALIMENTATION

Numéro	Composant
1	Alimentation débrayée
2	Alimentation enclenchée

En position neutre, l'outil peut être alimenté manuellement dans les deux sens. Les tuyaux connectés au boîtier d'alimentation doivent avoir une longueur supplémentaire d'environ 12" (304,8 mm) enroulée à l'intérieur du bras pour permettre au bras de bouger sans risque de provoquer un pincement des tuyaux.

Pour débrancher les tuyaux d'alimentation, appuyez sur le collier autour du tuyau et tirez pour extraire le tuyau.

FIGURE 4-47. MÉTHODE DE DÉCONNEXION DU TUYAU D'ALIMENTATION

4.5.6 Fonctionnement du système d'alimentation pneumatique

Procédez comme suit pour utiliser le système d'alimentation pneumatique :

1. Branchez les sources d'énergie.

TABLEAU 4-15. IDENTIFICATION DES VANNES DE LA PCU

Numéro	Composant
1	Vanne on/off d'alimentation
2	Vanne de réglage de vitesse
3	Ajustement de la vitesse d'avance

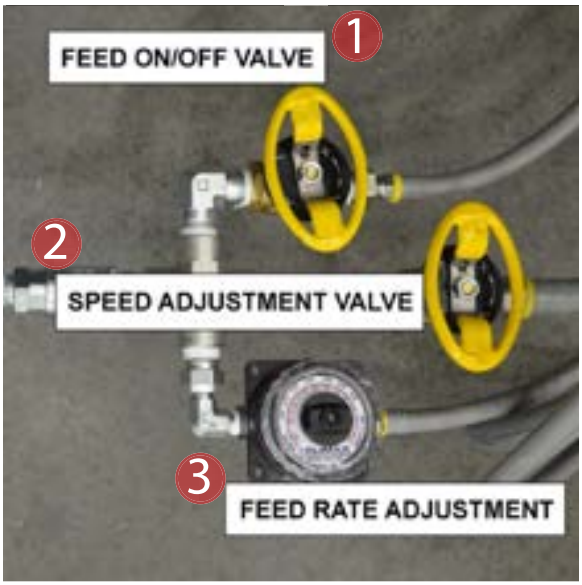

FIGURE 4-48. VANNES DE LA PCU

2. Appuyez sur le bouton Démarrer (START) sur la PCU.
3. Pour régler les rotations du plateau tournant par minute (t/min), utilisez la vanne de réglage de la vitesse pour mettre en marche le moteur d'entraînement.
4. Pour régler la vitesse d'alimentation par tour, tournez la molette de réglage de la vitesse d'alimentation sur l'alimentation minimale ou sur le réglage souhaité, si vous le connaissez.
5. À l'aide de la vanne d'activation/désactivation de l'alimentation, activez l'alimentation et réglez la vitesse d'alimentation pour la coupe souhaitée.

AVIS

Tournez la vanne d'activation/désactivation de l'alimentation complètement pour activer ou désactiver la vitesse d'alimentation.

6. Utilisez la vanne de réglage de vitesse pour régler le moteur d'entrainement afin d'obtenir la coupe souhaitée.
7. Lorsque la coupe est terminée, arrêtez d'abord l'avance puis la rotation de la machine.

⚠ AVERTISSEMENT

Pour éviter de graves blessures aux mains ou aux bras, ne touchez pas le bras d'usinage pendant son utilisation.

4.5.7 Réglage des caractéristiques de coupe

Procédez comme suit pour régler les caractéristiques de la découpe :

1. Lorsque la coupe est terminée, arrêtez l'alimentation et la machine.
2. La machine doit être verrouillée avant de changer d'outil ou d'effectuer tout réglage sur la machine.
3. Ajustez la direction de la machine, la profondeur de coupe ou la position de l'outil selon vos besoins.
4. Démarrez à nouveau la machine et l'alimentation pour commencer au besoin une nouvelle coupe.
5. Répétez l'opération jusqu'à obtenir le surfaçage souhaité.

⚠ AVERTISSEMENT

Pour éviter de graves blessures aux mains ou aux bras, ne touchez pas le bras d'usinage pendant son utilisation.

4.6 DÉMONTAGE

⚠ AVERTISSEMENT

En cas de fixation incorrecte, cette machine peut tomber et causer des blessures mortelles au personnel. Prêtez une attention particulière aux installations à brides verticales.

La machine doit être correctement arrimée et fixée à une grue ou à un autre dispositif de levage approprié avant de commencer les opérations de démontage. Utilisez un équipement d'arrimage supplémentaire par précaution.

Procédez comme suit pour démonter la machine :

1. Placez la table et le bras d'usinage en position de levage appropriée.
2. Mettez complètement hors tension et verrouillez le bloc hydraulique.
3. Rentrez la broche et retirez l'outil de coupe de la broche.
4. Débranchez les câbles d'alimentation et les tuyaux hydrauliques.
5. Remettez en place les pattes de réglage qui ont été retirées.
6. Montez la machine de la même manière qu'elle a été installée (voir la Section 3.3 à la page 22).

7. Placez la tour de tuyaux en position de rangement (voir la Figure 4-49).
8. Soutenez la machine à l'aide d'un palan.
9. Desserrez les vis de levage. Si la machine est en position verticale ou inclinée, laissez le boulon d'empilage inférieur en position et desserrez les autres vis de levage. Cela empêche la machine de tomber lorsque tous les autres pieds de levage sont desserrés.
10. Retirez la machine de la pièce à usiner à l'aide d'un palan.

FIGURE 4-49. POSITION DE RANGEMENT DE LA TOUR DE TUYAUX

En cas de stockage de la machine, consultez la Section 6.

Cette page est laissée vierge intentionnellement

5 MAINTENANCE ET DÉPANNAGE

DANS CE CHAPITRE :

5.1 INTERVALLES DE MAINTENANCE

⚠ CAUTION

Si la machine n'est pas bien nettoyée et entretenue, elle peut être endommagée, et la garantie peut être annulée.
Tenez toujours les copeaux à l'écart des pièces mobiles de la machine.

Le respect du calendrier de maintenance décrit au Tableau 5-1 à la page 98 est essentiel pour obtenir une durée de vie normale de la machine. Maintenez tous les composants de la machine propres et en bon état de fonctionnement.

Vérifiez que les pièces telles que les surfaces de montage, les raccords hydrauliques et les outils eux-mêmes sont exempts de copeaux métalliques, d'entailles ou de bavures. Pour éviter la corrosion, rincez soigneusement à l'eau douce et claire toutes les pièces de la machine qui sont exposées à l'eau salée.

TABLEAU 5-1. INTERVALLES DE MAINTENANCE ET TÂCHES

Intervalle	Tâche	Voir la section
Avant chaque utilisation	Vérifiez l'arrêt d'urgence de l'unité de conditionnement pneumatique.	5.2.1
	Vérifiez le circuit de déclenchement de l'unité de conditionnement pneumatique.	5.2.2
Avant et après chaque utilisation	Retirez les copeaux du roulement circulaire, du support du réducteur et de la glissière radiale.	5.2
Après chaque utilisation	Essuyez la machine avec des chiffons propres et secs.	--
	Retirez les débris, l'huile, et l'humidité de la surface de la machine.	--
Tous les cinq ans	Remplacez la batterie de l'API.	

5.2 TÂCHES DE MAINTENANCE

5.2.1 Vérifiez l'arrêt d'urgence de l'unité de conditionnement pneumatique

Avant chaque utilisation, vérifiez l'arrêt d'urgence en procédant comme suit :

1. Quand la machine est en marche, appuyez sur le bouton d'arrêt d'urgence (illustré à la Figure 4-11 à la page 61).
2. Vérifiez que la machine s'arrête.
3. Réinitialisez l'arrêt d'urgence en tirant le bouton vers le haut.

Si la machine redémarre immédiatement sans aucune action de l'opérateur, appuyez à nouveau sur le bouton d'arrêt d'urgence. Arrêtez d'utiliser la machine et contactez CLIMAX.

5.2.2 Vérifiez le circuit de déclenchement de l'unité de conditionnement pneumatique

Le circuit de dépressurisation de la machine empêche la machine de redémarrer inopinément quand l'alimentation en air de la PCU est perdue puis restaurée.

Procédez comme suit pour vérifier le circuit de dépressurisation de la PCU :

1. Vérifiez que l'unité de conditionnement pneumatique (PCU) est branchée à une alimentation en air et à la CM6200.
2. Vérifiez que le verrou de consignation d'alimentation en air est ouvert (tiré vers le haut).
3. Appuyez sur le bouton START (démarrer).
4. Ouvrez doucement la vanne de réglage de la vitesse de la PCU jusqu'à ce que l'entrainement rotatif se mette en route.

5. Fermer (appuyer sur) le robinet de consignation.
6. Vérifiez que la machine s’arrête.
7. Ouvrez le clapet de verrouillage.

Si la machine redémarre immédiatement sans aucune action de l'opérateur, appuyez sur le bouton d'arrêt d'urgence. Arrêtez d'utiliser la machine et contactez CLIMAX.

5.2.3 Maintenance de l'ensemble table rotative et entraînement

Avant et après l'utilisation de la CM6200, essuyez ou aspirez les copeaux du roulement circulaire, du support de réducteur et de la glissière radiale. CLIMAX ne recommande pas l'utilisation d'air comprimé autour du roulement linéaire ou des joints d'étanchéité.

Les roulements principaux et le réducteur sont lubrifiés à vie dans le cadre d'une utilisation normale.

5.2.4 Remplacement de la batterie de l’API

AVIS

L'automate programmable (API) du système de contrôle CM6200 utilise une batterie pour maintenir le programme lorsque l'alimentation secteur est coupée. Cette batterie doit être remplacée périodiquement, sinon le programme de l’API sera perdu et la machine ne fonctionnera pas tant que le programme de l’API n'aura pas été restauré. Afin d'éviter tout arrêt inattendu des commandes CM6200, il est important de remplacer la batterie régulièrement.

La durée de vie de la batterie est d'environ cinq ans, mais cela varie en fonction de la température à laquelle la machine est utilisée et stockée (voir la Figure 5-1).

Battery life & replacement guidelines

FX3U-32BL battery life : Approx. 5 years (ambient temperature : 25°C(77°F))
The life of the battery changes with respect to ambient temperature.
When planning for battery replacement, please estimate the battery life according to the graph to the right and order replacement batteries in advance.

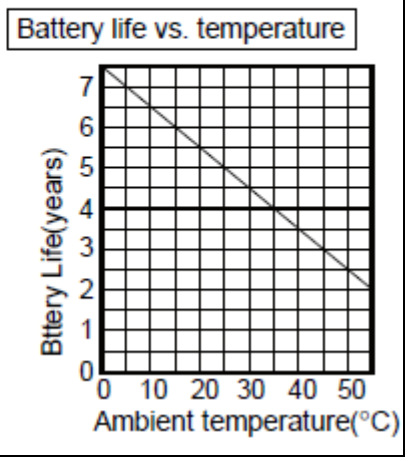

FIGURE 5-1. SPÉCIFICATIONS DE LA BATTERIE DE L'API

5.2.5 Réglages du frein de ralentissement

Il convient de vérifier périodiquement le réglage du frein de ralentissement de la CM6200. Ce réglage ne devrait être nécessaire qu'après la maintenance, ou si la machine se déplace par à-coups.

Le frein de ralentissement est destiné à supprimer le jeu de l'engrenage, principalement pour les applications verticales ou les outils spéciaux.

FIGURE 5-2. VUE DE DESSUS DU FREIN DE RALENTISSEMENT

La Figure 5-2 et la Figure 5-3 montrent l'emplacement du frein de ralentissement sur le dessus de la table rotative.

Le système appliquera une résistance à l'engrenage pour réduire le jeu et maintenir une vitesse constante dans les applications d'outillage vertical ou spécial.

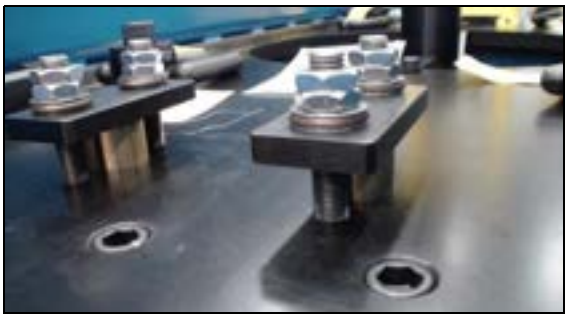

FIGURE 5-3. VUE LATÉRALE DU FREIN DE RALENTISSEMENT

5.2.6 Réglage du frein de ralentissement

Pour les applications verticales, procédez comme suit pour régler le frein de ralentissement :

1. Mettez la machine hors tension et verrouillez-la.
2. Pour régler le frein de ralentissement, placez la machine de sorte que la table rotative soit en position horizontale et de niveau.
3. Retirez le moteur.

CAUTION

Ne retirez le moteur que si la machine est horizontale et que toutes les pièces rotatives ont été bloquées. Le fait de libérer le moteur permet au moyeu de tourner librement.

4. Desserrez complètement le frein de ralentissement en retirant les écrous.

DANGER

Ne retirez pas les boulons si la machine n'est pas en position horizontale, car un mouvement inattendu du plateau tournant de la CM6200 peut en résulter et provoquer des blessures graves, voire mortelles.

5. Débloquez lentement et avec précaution tout blocage de la machine.
6. Vérifiez la tension du moyeu sans le frein de ralentissement à l'aide d'une clé dynamométrique dans la rainure de clavetage de l'engrenage, elle doit indiquer environ 4 in-lb (0,452 Nm) sans le frein de ralentissement enclenché.
7. Pour serrer le frein de ralentissement, serrez les écrous lentement et continuez à tester le couple jusqu'à ce qu'il y ait un couple supplémentaire de 4-5 in-lb (0,452-0,565 Nm) lorsque le moyeu est tourné manuellement.
8. Installez le moteur correspondant à votre application d'usinage.

CAUTION

Maintenez les espaces entre le matériel et les glissières exempts de copeaux et de débris afin que la machine puisse se déplacer librement.

Applications d'usinage horizontal à un seul point ou de fraisage

Le frein de ralentissement doit être relâché lors d'un pointage unique. Cependant, il y a des cas où le frein de ralentissement doit être enclenché, par exemple lors du fraisage dans n'importe quelle position.

1. Verrouillez complètement la machine et mettez-la hors tension.

2. Positionnez la machine de manière à ce que la surface de la plaque supérieure soit en position horizontale et de niveau.
3. Retirez le moteur.

⚠ CAUTION

Ne retirez le moteur que si la machine est horizontale et que toutes les parties rotatives ont été bloquées. Le fait de relâcher le moteur permet au moyeu de tourner librement.

4. Desserrez complètement le frein de ralentissement en retirant les écrous.

⚠ DANGER

Ne retirez pas les boulons si la machine n'est pas en position horizontale, car un mouvement inattendu du plateau tournant de la CM6200 peut en résulter et provoquer des blessures graves, voire mortelles.

5. Débloquez lentement et avec précaution tout blocage de la machine.
6. Vérifiez la tension du moyeu sans le frein de ralentissement à l'aide d'une clé dynamométrique dans la rainure de clavetage de l'engrenage, elle doit indiquer environ 4 in-lb (0,452 Nm) sans le frein de ralentissement enclenché.
7. Si vous faites tourner la machine manuellement en position horizontale, vous devez constater un couple d'environ 4 in-lbs sans que le frein d'entraînement soit engagé. Ce couple est mesuré au niveau de l'engrenage du moteur à l'aide d'une clé dynamométrique dans la rainure de clavetage de l'engrenage.
8. Serrez les écrous de blocage situés sur le dessus du frein de ralentissement afin de bloquer le frein d'entraînement en position et d'empêcher les écrous de blocage de se desserrer par vibration.
9. Installez le moteur correspondant à votre application d'usinage.

5.3 LUBRIFIANTS RECOMMANDÉS

CLIMAX recommande l’utilisation des lubrifiants suivants aux endroits indiqués. Ne pas utiliser les lubrifiants appropriés peut entraîner des dommages et une usure prématurée de la machine.

⚠ CAUTION

Évitez les dommages et l'usure prématurée de la machine, et protégez votre garantie en n'utilisant que des lubrifiants approuvés.

TABLEAU 5-2. LUBRIFIANTS APPROUVÉS

Points d'application	Lubrifiant	Lubrifiant biodégradable	Viscosité (cSt)	Quantité	Fréquence
Fréquemment					
Outil de coupe	AW 32	CONOCO Ecoterra 32	32 @ 40 °C 544 @ 100 °C	Au besoin	Utilisation continue pendant la coupe
Tous les jours					
Boîte d'engrenage de la tête de fraiseuse	Mobilith SHC 460	N/A	414 @ 40 °C 47 @ 100 °C	5 cc	Toutes les 8 heures d'utilisation
Glissières en queue d'aronde[a]	AW 32	CONOCO Ecoterra 32	32 @ 40 °C 544 @ 100 °C	Au besoin	Quotidiennement pendant l'utilisation de la machine
Surfaces non peintes	LPS1 ou LPS2	N/A	38 @ 25 °C	Au besoin	Pendant l'utilisation journalière de la machine et avant de la stocker
Chaque utilisation					
Blocs hydrauliques	CASTROL Hyspin AWS-46 (été)	CASTROL BioBar 46 (été) ; 32 (hiver)	46 @ 40 °C 682 @ 100 °C	Au besoin pour remplir le réservoir jusqu'au niveau du voyant	Remplir à chaque utilisation Remplacer l'huile tous les 2 ans[b]
	AWS-32 (hiver)		32 @ 40 °C 544 @ 100 °C		
Vis à billes Eisenberger	CONOCO Poly-Tac EP [c]	CASTROL BioTac EP 2	129 @ 40 °C 116 @ 100 °C	1 cc par écrou	Une fois par utilisation ou chaque semaine pour une utilisation continue
	Microlube GBU-Y 131	N/A	130 @ 40 °C 15 @ 100 °C		

TABLEAU 5-2. LUBRIFIANTS APPROUVÉS

Points d'application	Lubrifiant	Lubrifiant biodégradable	Viscosité (cSt)	Quantité	Fréquence
Glissière linéaire	Glissière THK – Graisse THK AFA 2	N/A	32 @ 40 °C	2 cc par bloc de roulement	Une fois par utilisation ou chaque semaine pour une utilisation continue
	CONOCO Poly-Tac EP 2	CASTROL BioTac EP 2	129 @ 40 °C 116 @ 100 °C		
Chaque semaine					
APU	AW 32	N/A	22-68 @ 40 °C 4,3-8,7 @ 100 °C	Remplir le lubrificateur	Chaque utilisation
Vis mère sur une tête d'outil à point unique	- Pulvérisateur de lubrifiant NOOK E-100 - Graisse NOOK PAG-1	CASTROL BioTac EP 2	96 @ 40 °C 113 @ 100 °C	Légère couche appliquée à la main ou avec un aérosol	Chaque semaine pendant l'utilisation de la machine
Vis de levage du mandrin	Moly qualité anti-grippage	N/A	N/A	1 cc par vis	Toutes les semaines pendant l'utilisation de la machine et avant de la stocker
Chaque année					
Ensemble table rotative et entraînement[d]	CONOCO Poly-Tac EP 2	CASTROL BioTac EP 2	129 @ 40 °C 116 @ 100 °C	20 cc	Une fois par an
Joint de racleur DI sur table rotative	Pâte de silicone 3M 051135-08946	N/A	N/A	3 cc	Une fois par an
Réducteur principal de la table	Huile pour engrenages Mobil 629	N/A	150 @ 40 °C 158 @ 100 °C	N/A	Lubrifié à vie dans des conditions normales d'utilisation
Moteurs électriques	Voir la documentation du fournisseur	N/A	N/A	Voir la documentation du fournisseur	Voir la documentation du fournisseur

a. Utilisez une huile minérale affinée ou synthétique anti-corrosion qui forme un film d'huile solide et n'est pas émulsifiée ou éliminée facilement par l'agent de refroidissement. Les huiles hydrauliques ne sont généralement pas adaptées pour la lubrification des passages de glissière.

b. Toujours remplacer les filtres hydrauliques lors du remplacement de l'huile hydraulique. Ne jamais supposer que l'huile dans les tambours est propre. Toujours pomper l'huile à travers un filtre hydraulique de 5 microns avant/pendant le remplissage du réservoir.

c. L'utilisation d'autres lubrifiants sur les produits THK rend caduque la garantie du fabricant.

d. Bien qu'une graisse à base de lithium puisse être utilisée, une graisse à base de calcium permet une meilleure lubrification en ingérant de plus grandes quantités d'eau (commun dans les machines-outils portatives).

ASTUCE :

* Si un lubrifiant approuvé ne peut pas être utilisé, contactez Climax pour une alternative équivalente.

⚠ CAUTION

Le lubrifiant utilisé sur le joint du racleur DI doit être de la pâte de silicone 3M réf. 051135-08946 ou équivalent. Aucun autre lubrifiant ne doit être utilisé sur ce joint.

5.3.1 Lubrification de la couronne principale

ASTUCE :

La couronne principale doit être lubrifiée tous les ans. La couronne doit être lubrifiée pendant que la table tourne lentement.

⚠ DANGER

Ne retirez pas le moteur si la machine n'est pas en position horizontale, car un mouvement inattendu du plateau tournant en rotation CM6200 peut en résulter et provoquer des blessures graves, voir mortelles.

Procédez comme suit pour lubrifier la couronne principale, tout en vous référant à la Figure A-1 à la page 120 :

1. Retirez la protection de l'encodeur.
2. Retirez l'ensemble réducteur du servomoteur et pignon d'entraînement comme une seule unité.
3. Laissez la table tourner lentement et lubrifiez l'engrenage avec une fine couche au fur et à mesure à chaque passage.
4. Une fois la lubrification terminée, replacez soigneusement l'ensemble pignon d'entraînement et la protection de l'encodeur.

5.3.2 Maintenance de la glissière linéaire

Pendant le fonctionnement, lubrifiez fréquemment les rails linéaires et les glissières.

Les rails, les glissières et les pièces correspondantes sont alignés de manière critique en usine. Si un réalignement est nécessaire, contactez CLIMAX pour qu'ils s'occupent de ce service.

Avant et après l'utilisation de la machine, essuyez les rails et les glissières avec une huile légère.

AVIS

Ne laissez rien tomber sur les rails et n'entreposez pas d'objets sur les rails.

5.4 DÉPANNAGE

Cette section est destinée à vous aider à résoudre les problèmes de performance de base de la machine. Pour un entretien avancé, ou si vous avez des questions sur les procédures suivantes, contactez CLIMAX.

5.4.1 La machine ne tourne pas

Si la machine ne tourne pas, vérifier ce qui suit :

- La HPU est sous tension (Section 3.11 à la page 50).
- La connexion entre la HPU et le servo est bonne (Section 3.11 à la page 50). Essayez ce qui suit :
  a) Mettez la HPU hors tension.
  b) Nettoyez tous les débris dans les connexions.
  c) Assurez-vous que les connexions sont verrouillées.
  d) Vérifiez qu'aucun câble d'attache n’est endommagé ou débranché.
- Aucun copeau n'est incrusté dans les câbles, et les câbles ne sont pas autrement endommagés (Section 1.4 à la page 3).
- Tout message d'erreur s'affiche sur le boîtier (Section 4.2.2 à la page 60).
- En mode de point unique, vérifiez que le frein de ralentissement est désactivé (Section 5.2.6 à la page 101).

5.4.2 La machine ne s'alimente pas ou est lente et sans réponse

Si la machine n’avance pas, vérifier ce qui suit :

- Les connexions pneumatiques de la source à l'alimentation ne présentent pas de lignes cassées ou déconnectées (Figure 4-47 à la page 94).
- L’alimentation est enclenchée (voir la section 4.2 à la page 59).
- Les filtres sales ont été nettoyés (Section 5.3 à la page 102).
- Le frein en Z est relâché (Section 4.1.3 à la page 55).

5.4.3 La machine ne coupe pas bien

Si la machine ne coupe pas bien, vérifier ce qui suit :

- La fraise correcte est utilisée pour l'application (par exemple, la bonne taille pour la tâche).

- La fraise est serrée dans la broche (Section 4.3.2 à la page 76).
- Aucune insertion de surface n’est cassée, émoussée ou desserrée. Serrez, remplacez ou tournez si nécessaire.
- Le frein est enclenché (Section 5.2.6 à la page 101).
- Aucun composant usé ou endommagé dans la broche. Si vous en trouvez, contactez CLIMAX pour plus d'informations.
- La vitesse d'alimentation et le régime de la broche sont corrects pour l'application. La vitesse correcte varie selon l'application.
- Les pinces sont serrées sur le bras de l'outil (Section 3.6.1 à la page 35).
- Lors du fraisage, le frein de ralentissement est correctement enclenché (Section 5.2.6 à la page 101).
- Le mandrin du DI a une pression de serrage égale (Section 3.5.3 à la page 33).

5.4.4 La machine ne coupe pas à plat

Si la machine ne coupe pas à plat, vérifier ce qui suit :

- La machine est serrée correctement sur la pièce à usiner (Section 3.7 à la page 39).
- Les jambes du mandrin ne sont pas trop serrées, ce qui pourrait déformer la pièce (Section 3.5.3 à la page 33).
- La broche est au carré (Section 4.1.3 à la page 55).

5.4.5 La broche ne tourne pas

Si la broche ne tourne pas, vérifier ce qui suit :

- La HPU est sous tension (Section 3.11 à la page 50).
- Les tuyaux hydrauliques sont connectés (Section 3.11 à la page 50).
- Aucun message d'erreur ne s'affiche sur le boîtier (Section 4.2.2 à la page 60).
- Le niveau de liquide est suffisant dans la HPU. Remplissez si nécessaire.
- La broche est dégagée de tout élément.

5.4.6 La machine s'arrête brutalement

Si la machine s'arrête brutalement, vérifiez les points suivants :

- La HPU est sous tension (Section 3.11 à la page 50).
- Aucun message d'erreur ne s'affiche sur le boîtier (Section 4.2.2 à la page 60).
- L'attache n'est pas endommagée ou déconnectée.

5.4.7 La profondeur de coupe change inopinément

Si la profondeur de coupe change sans que vous le vouliez, vérifiez les points suivants :

- Le frein est enclenché (Section 5.4 à la page 106).
- Il y a suffisamment de friction sur la vis-mère dans la direction Z. S'il est trop lâche, serrez les vis de réglage de chaque côté du bloc de roulement, pour augmenter la tension sur les bagues de tension.

5.4.8 L'alarme ou l'avertissement du système servo

Pour tout problème avec la boîte de jonction du servomoteur, consultez l'annexe D à la page 179.

Pour l'ancien servomoteur (MR-J3), consultez la Section 5.5 à la page 109.

5.5 CODES D'ERREUR DU SERVO-AMPLIFICATEUR MR-J3

POINT

- As soon as an alarm occurs, make the Servo off status and interrupt the main circuit power.

If an alarm/warning has occurred, refer to this chapter and remove its cause.

8.1 Alarms and warning list

When a fault occurs during operation, the corresponding alarm or warning is displayed. If any alarm or warning has occurred, refer to section 8.2 or 8.3 and take the appropriate action. When an alarm occurs, the ALM turns OFF.
After its cause has been removed, the alarm can be deactivated in any of the methods marked O in the alarm deactivation column. The alarm is automatically canceled after removing the cause of occurrence.

	Display	Name	Alarm deactivation		
			Power OFF→ON	Error reset	CPU reset
Alarms	10	Undervoltage	O	O	O
	12	Memory error 1 (RAM)	O		
	13	Clock error	O		
	15	Memory error 2 (EEP-ROM)	O		
	16	Encoder error 1 (At power on)	O		
	17	Board error	O		
	19	Memory error 3 (Flash-ROM)	O		
	1A	Motor combination error	O		
	20	Encoder error 2	O		
	24	Main circuit error	O	O	O
	25	Absolute position erase	O		
	30	Regenerative error	(Note 1) O	(Note 1) O	(Note 1) O
	31	Overspeed	O	O	O
	32	Overcurrent	O		
	33	Overvoltage	O	O	O
	34	Receive error 1	O	(Note 2) O	O
	35	Command frequency error	O	O	O
	36	Receive error 2	O	O	O
	37	Parameter error	O		
	45	Main circuit device overheat	(Note 1) O	(Note 1) O	(Note 1) O
	46	Servo motor overheat	(Note 1) O	(Note 1) O	(Note 1) O
	47	Cooling fan error	O		
	50	Overload 1	(Note 1) O	(Note 1) O	(Note 1) O
	51	Overload 2	(Note 1) O	(Note 1) O	(Note 1) O
	52	Error excessive	O	O	O
	8A	USB communication time-out error	O	O	O
	8E	USB communication error	O	O	O
	888	Watchdog	O		

	Display	Name
Warnings	92	Battery cable disconnection warning
	96	Home position setting warning
	9F	Battery warning
	E0	Excessive regeneration warning
	E1	Overload warning 1
	E3	Absolute position counter warning
	E4	Parameter warning
	E6	Servo forced stop warning
	E7	Controller forced stop warning
	E8	Cooling fan speed reduction warning
	E9	Main circuit off warning
	EC	Overload warning 2
	ED	Output watt excess warning

Note 1. Deactivate the alarm about 30 minutes of cooling time after removing the cause of occurrence.
2. In some controller communication status, the alarm factor may not be removed.

8.2 Remedies for alarms

CAUTION

- When any alarm has occurred, eliminate its cause, ensure safety, then reset the alarm, and restart operation. Otherwise, injury may occur.
- If an absolute position erase (25) occurred, always make home position setting again. Not doing so may cause unexpected operation.
- As soon as an alarm occurs, mark Servo-off and power off the main circuit and control circuit.

POINT

- When any of the following alarms has occurred, do not deactivate the alarm and resume operation repeatedly. To do so will cause the servo amplifier/servo motor to fail. Remove the cause of occurrence, and leave a cooling time of more than 30 minutes before resuming operation. To protect the main circuit elements, any of these servo alarms cannot be deactivated from the servo system controller until the specified time elapses after its occurrence. Judging the load changing condition until the alarm occurs, the servo amplifier calculates this specified time automatically.
- Regenerative error (30)
- Overload 1 (50)
- Overload 2 (51)
- The alarm can be deactivated by switching power off, then on or by the error reset command • CPU reset from the servo system controller. For details, refer to section 8.1.

When an alarm occurs, the trouble (ALM) switches off and the dynamic brake is operated to stop the servo motor. At this time, the display indicates the alarm No.
The servo motor comes to a stop. Remove the cause of the alarm in accordance with this section. Use the MR Configurator to refer to a factor of alarm occurrence.

Display	Name	Definition	Cause	Action
10	Undervoltage	Power supply voltage dropped. MR-J3-□B: 160VAC or less MR-J3-□B1: 83VAC or less MR-J3-□B4: 280VAC or less	1. Power supply voltage is low.	Check the power supply.
			2. There was an instantaneous control power failure of 60ms or longer.	
			3. Shortage of power supply capacity caused the power supply voltage to drop at start, etc.	
			4. The bus voltage dropped to the following value or less. MR-J3-□B: 200VDC MR-J3-□B1: 158VDC MR-J3-□B4: 380VDC	
			5. Faulty parts in the servo amplifier Checking method Alarm (10) occurs if power is switched on after disconnection of all cables but the control circuit power supply cables.	Change the servo amplifier.

Display	Name	Definition	Cause	Action
12	Memory error 1 (RAM)	RAM, memory fault	Faulty parts in the servo amplifier Checking method Alarm (any of 12 and 13) occurs if power is switched on after disconnection of all cables but the control circuit power supply cables.	Change the servo amplifier.
13	Clock error	Printed board fault		
		Clock error transmitted from the controller	Faulty controller Checking method Alarm (13) occurs, if servo controller is used in multiple CPU system.	Change the servo system controller.
15	Memory error 2 (EEP-ROM)	EEP-ROM fault	1. Faulty parts in the servo amplifier Checking method Alarm (15) occurs if power is switched on after disconnection of all cables but the control circuit power supply cables.	Change the servo amplifier.
			2. The number of write times to EEP-ROM exceeded 100,000.	
16	Encoder error 1 (At power on)	Communication error occurred between encoder and servo amplifier.	1. Encoder connector (CN2) disconnected.	Connect correctly.
			2. Encoder fault	Change the servo motor.
			3. Encoder cable faulty (Wire breakage or shorted)	Repair or change the cable.
			4. Encoder cable type (2-wire, 4-wire) selection was wrong in parameter setting.	Correct the setting in the fourth digit of parameter No.PC04.
17	Board error 2	CPU/parts fault	Faulty parts in the servo amplifier Checking method Alarm (17 or 19) occurs if power is switched on after disconnection of all cables but the control circuit power supply cable.	Change the servo amplifier.
19	Memory error 3 (Flash ROM)	ROM memory fault		
1A	Motor combination error	Wrong combination of servo amplifier and servo motor.	Wrong combination of servo amplifier and servo motor connected.	Use correct combination.
20	Encoder error 2	Communication error occurred between encoder and servo amplifier.	1. Encoder connector (CN2) disconnected.	Connect correctly.
			2. Encoder cable faulty (Wire breakage or shorted)	Repair or change the cable.
			3. Encoder fault	Change the servo motor.
24	Main circuit error	Ground fault occurred at the servo motor power (U,V and W phases) of the servo amplifier.	1. Power input wires and servo motor power wires are in contact.	Connect correctly.
			2. Sheathes of servo motor power cables deteriorated, resulting in ground fault.	Change the cable.
			3. Main circuit of servo amplifier failed. Checking method Alarm (24) occurs if the servo is switched on after disconnecting the U, V, W power cables from the servo amplifier.	Change the servo amplifier.
25	Absolute position erase	Absolute position data in error	1. Voltage drop in encoder (Battery disconnected.)	After leaving the alarm occurring for a few minutes, switch power off, then on again. Always make home position setting again.
			2. Battery voltage low	Change the battery. Always make home position setting again.
			3. Battery cable or battery is faulty.	
		Power was switched on for the first time in the absolute position detection system.	4. Home position not set.	After leaving the alarm occurring for a few minutes, switch power off, then on again. Always make home position setting again.

Display	Name	Definition	Cause	Action
30	Regenerative error	Permissible regenerative power of the built-in regenerative resistor or regenerative option is exceeded.	1. Wrong setting of parameter No. PA02	Set correctly.
			2. Built-in regenerative resistor or regenerative option is not connected.	Connect correctly.
			3. High-duty operation or continuous regenerative operation caused the permissible regenerative power of the regenerative option to be exceeded. Checking method Call the status display and check the regenerative load ratio.	1. Reduce the frequency of positioning. 2. Use the regenerative option of larger capacity. 3. Reduce the load.
			4. Power supply voltage is abnormal. MR-J3-□B: 260VAC or more MR-J3-□B1: More than 135VAC MR-J3-□B4: 535VAC or more	Check the power supply.
			5. Built-in regenerative resistor or regenerative option faulty.	Change the servo amplifier or regenerative option.
		Regenerative transistor fault	6. Regenerative transistor faulty. Checking method 1) The regenerative option has overheated abnormally. 2) The alarm occurs even after removal of the built-in regenerative resistor or regenerative option.	Change the servo amplifier.
31	Overspeed	Speed has exceeded the instantaneous permissible speed.	1. Small acceleration/deceleration time constant caused overshoot to be large.	Increase acceleration/deceleration time constant.
			2. Servo system is instable to cause overshoot.	1. Re-set servo gain to proper value. 2. If servo gain cannot be set to proper value. 1) Reduce load inertia moment ratio; or 2) Reexamine acceleration/deceleration time constant.
			3. Encoder faulty.	Change the servo motor.
32	Overcurrent	Current that flew is higher than the permissible current of the servo amplifier. (If the alarm (32) occurs again when turning ON the servo after resetting the alarm by turning OFF/ON the power when the alarm (32) first occurred, the transistor (IPM • IGBT) of the servo amplifier may be at fault. In the case, do not repeat to turn OFF/ON the power. Check the transistor with the checking method of "Cause 2".)	1. Short occurred in servo motor power (U, V, W).	Correct the wiring.
			2. Transistor (IPM • IGBT) of the servo amplifier faulty. Checking method Alarm (32) occurs if power is switched on after U,V and W are disconnected.	Change the servo amplifier.
			3. Ground fault occurred in servo motor power (U, V, W).	Correct the wiring.
			4. External noise caused the overcurrent detection circuit to misoperate.	Take noise suppression measures.

Display	Name	Definition	Cause	Action
33	Overvoltage	The following shows the input value of converter bus voltage. MR-J3-□B(1): 400VDC or more MR-J3-□B4: 800VDC or more	1. Regenerative option is not used.	Use the regenerative option.
			2. Though the regenerative option is used, the parameter No.PA02 setting is "□□00 (not used)".	Set correctly.
			3. Lead of built-in regenerative resistor or regenerative option is open or disconnected.	1. Change the lead. 2. Connect correctly.
			4. Regenerative transistor faulty.	Change the servo amplifier.
			5. Wire breakage of built-in regenerative resistor or regenerative option	1. For wire breakage of built-in regenerative resistor, change the servo amplifier. 2. For wire breakage of regenerative option, change the regenerative option.
			6. Capacity of built-in regenerative resistor or regenerative option is insufficient.	Add regenerative option or increase capacity.
			7. Power supply voltage high.	Check the power supply.
			8. Ground fault occurred in servo motor power (U, V, W).	Correct the wiring.
			9. The jumper across BUE-SD of the FR-BU2 brake unit is removed.	Fit the jumper across BUE-SD.
34	Receive error 1	SSCNETⅢ communication error (Continuously communication error with about 3.5ms interval.)	1. The SSCNETⅢ cable is disconnected.	Connect it after turning off the control circuit power supply for servo amplifier.
			2. The surface at the end of SSCNETⅢ cable got dirty.	Wipe dirt at the surface away. (Refer to section 3.9)
			3. The SSCNETⅢ cable is broken or severed.	Change the cable.
			4. Noise entered the servo amplifier.	Take noise suppression measures.
			5. Optical characteristic of SSCNETⅢ cable deteriorated because vinyl tape and/or wire sheath, which contains migrating plasticizer, adhered to the cable.	Remove the vinyl tape and/or wire sheath, which contains migrating plasticizer, and exchange the cable.
35	Command frequency error	Input pulse frequency of command pulse is too high.	1. Command given is greater than the maximum speed of the servo motor.	Check operation program.
			2. Servo system controller failure.	Change the servo system controller.
			3. Noise entered the servo amplifier.	Take noise of I/O signal suppression measures.
			4. Noise entered the controller.	Take noise from the controller suppression measures.
36	Receive error 2	SSCNETⅢ communication error (Intermittently communication error with about 70ms interval.)	1. The SSCNETⅢ cable is disconnected.	Connect it after turning off the control circuit power supply for servo amplifier.
			2. The surface at the end of SSCNETⅢ cable got dirty.	Wipe dirt away from the surface. (Refer to section 3.9)
			3. The SSCNETⅢ cable is broken or severed.	Change the cable.
			4. Noise entered the servo amplifier.	Take noise suppression measures.
			5. Optical characteristic of SSCNETⅢ cable deteriorated because vinyl tape and/or wire sheath, which contains migrating plasticizer, adhered to the cable.	Remove the vinyl tape and/or wire sheath, which contains migrating plasticizer, and exchange the cable.

Display	Name	Definition	Cause	Action
37	Parameter error	Parameter setting is wrong.	1. Servo amplifier fault caused the parameter setting to be rewritten.	Change the servo amplifier.
			2. There is a parameter whose value was set to outside the setting range by the controller.	Change the parameter value to within the setting range.
			3. The number of write times to EEP-ROM exceeded 100,000 due to parameter write, etc.	Change the servo amplifier.
45	Main circuit device overheat	Main circuit device overheat	1. Servo amplifier faulty.	Change the servo amplifier.
			2. The power supply was turned on and off continuously by overloaded status.	The drive method is reviewed.
			3. Ambient temperature of servo motor is over 55℃.	Check environment so that ambient temperature is 0 to 55℃.
			4. Used beyond the specifications of close mounting.	Use within the range of specifications.
46	Servo motor overheat	Servo motor temperature rise actuated the thermal sensor.	1. Ambient temperature of servo motor is over 40℃.	Check environment so that ambient temperature is 0 to 40℃.
			2. Servo motor is overloaded.	1. Reduce load. 2. Check operation pattern. 3. Use servo motor that provides larger output.
			3. Thermal sensor in encoder is faulty.	Change the servo motor.
47	Cooling fan error	The cooling fan of the servo amplifier stopped, or its speed decreased to or below the alarm level.	1. Cooling fan life expiration (Refer to section 2.5.)	Change the cooling fan of the servo amplifier.
			2. Foreign matter caught in the cooling fan stopped rotation.	Remove the foreign matter.
			3. The power supply of the cooling fan failed.	Change the servo amplifier.
50	Overload 1	Load exceeded overload protection characteristic of servo amplifier.	1. Servo amplifier is used in excess of its continuous output current.	1. Reduce load. 2. Check operation pattern. 3. Use servo motor that provides larger output.
			2. Servo system is instable and hunting.	1. Repeat acceleration/ deceleration to execute auto tuning. 2. Change the auto tuning response setting. 3. Set auto tuning to OFF and make gain adjustment manually.
			3. Machine struck something.	1. Check operation pattern. 2. Install limit switches.
			4. Wrong connection of servo motor. Servo amplifier's output terminals U, V, W do not match servo motor's input terminals U, V, W.	Connect correctly.
			5. Encoder faulty. Checking method When the servo motor shaft is rotated with the servo off, the cumulative feedback pulses do not vary in proportion to the rotary angle of the shaft but the indication skips or returns midway.	Change the servo motor.
			6. After Overload 2 (51) occurred, turn OFF/ON the power supply to clear the alarm. Then the overload operation is repeated.	1. Reduce load. 2. Check operation pattern. 3. Use servo motor that provides larger output.

Display	Name	Definition	Cause	Action
51	Overload 2	Machine collision or the like caused max. For the time of the alarm occurrence, refer to the section 10.1.	1. Machine struck something.	1. Check operation pattern. 2. Install limit switches.
			2. Wrong connection of servo motor. Servo amplifier's output terminals U, V, W do not match servo motor's input terminals U, V, W.	Connect correctly.
			3. Servo system is instable and hunting.	1. Repeat acceleration/deceleration to execute auto tuning. 2. Change the auto tuning response setting. 3. Set auto tuning to OFF and make gain adjustment manually.
			4. Encoder faulty. Checking method When the servo motor shaft is rotated with the servo off, the cumulative feedback pulses do not vary in proportion to the rotary angle of the shaft but the indication skips or returns midway.	Change the servo motor.
52	Error excessive	The deviation between the model position and the actual servo motor position exceeds the parameter No.PC01 setting value (initial value: 3 revolutions).	1. Acceleration/deceleration time constant is too small.	Increase the acceleration/deceleration time constant.
			2. Torque limit value set with controller is too small.	Increase the torque limit value.
			3. Motor cannot be started due to torque shortage caused by power supply voltage drop.	1. Check the power supply capacity. 2. Use servo motor which provides larger output.
			4. Position loop gain 1 (parameter No.PB08) value is small.	Increase set value and adjust to ensure proper operation.
			5. Servo motor shaft was rotated by external force.	1. When torque is limited, increase the limit value. 2. Reduce load. 3. Use servo motor that provides larger output.
			6. Machine struck something.	1. Check operation pattern. 2. Install limit switches.
			7. Encoder faulty	Change the servo motor.
			8. Wrong connection of servo motor. Servo amplifier's output terminals U, V, W do not match servo motor's input terminals U, V, W.	Connect correctly.
			9. SSCNETⅢ cable fault	Change the SSCNETⅢ cable.
			10. Optical characteristic of SSCNETⅢ cable deteriorated because vinyl tape and/or wire sheath, which contains migrating plasticizer, adhered to the cable.	Remove the vinyl tape and/or wire sheath, which contains migrating plasticizer, and exchange the cable.
8A	USB communication time-out error	Communication with MR Configurator in test operation mode stopped for longer than the specified time.	1. USB cable breakage.	Change the USB cable.
8E	USB communication error	Serial communication error occurred between servo amplifier and communication device (e.g. personal computer).	1. USB cable fault (Open cable or short circuit)	Change the USB cable.
			2. Communication device (e.g. personal computer) faulty	Change the communication device (e.g. personal computer).

Display	Name	Definition	Cause	Action
(Note) 888	Watchdog	CPU, parts faulty	Fault of parts in servo amplifier Checking method Alarm (888) occurs if power is switched on after disconnection of all cables but the control circuit power supply cable.	Change the servo amplifier.

Note. At power-on, "888" appears instantaneously, but it is not an error.

8.3 Remedies for warnings

⚠ CAUTION

- If an absolute position counter warning (E3) occurred, always make home position setting again. Not doing so may cause unexpected operation.

POINT

- When any of the following alarms has occurred, do not resume operation by switching power of the servo amplifier OFF/ON repeatedly. The servo amplifier and servo motor may become faulty. If the power of the servo amplifier is switched OFF/ON during the alarms, allow more than 30 minutes for cooling before resuming operation.
  - Excessive regenerative warning (E0)
  - Overload warning 1 (E1)

If E6, E7 or E9 occurs, the servo off status is established. If any other warning occurs, operation can be continued but an alarm may take place or proper operation may not be performed.
Remove the cause of warning according to this section. Use the MR Configurator to refer to a factor of warning occurrence.

Display	Name	Definition	Cause	Action
92	Battery cable disconnection warning	Absolute position detection system battery voltage is low.	1. Battery cable is open.	Repair cable or changed.
			2. Battery voltage supplied from the servo amplifier to the encoder fell to about 3V or less. (Detected with the encoder)	Change the battery.
96	Home position setting warning	Home position setting could not be made.	1. Droop pulses remaining are greater than the in-position range setting.	Remove the cause of droop pulse occurrence
			2. Command pulse entered after clearing of droop pulses.	Do not enter command pulse after clearing of droop pulses.
			3. Creep speed high.	Reduce creep speed.
9F	Battery warning	Voltage of battery for absolute position detection system reduced.	Battery voltage fell to 3.2V or less. (Detected with the servo amplifier)	Change the battery.
E0	Excessive regeneration warning	There is a possibility that regenerative power may exceed permissible regenerative power of built-in regenerative resistor or regenerative option.	Regenerative power increased to 85% or more of permissible regenerative power of built-in regenerative resistor or regenerative option. Checking method Call the status display and check regenerative load ratio.	1. Reduce frequency of positioning. 2. Change the regenerative option for the one with larger capacity. 3. Reduce load.

Display	Name	Definition	Cause	Action
E1	Overload warning 1	There is a possibility that overload alarm 1 or 2 may occur.	Load increased to 85% or more of overload alarm 1 or 2 occurrence level. Cause, checking method Refer to 50,51.	Refer to 50, 51.
E3	Absolute position counter warning	Absolute position encoder pulses faulty.	1. Noise entered the encoder.	Take noise suppression measures.
			2. Encoder faulty.	Change the servo motor.
		The multi-revolution counter value of the absolute position encoder exceeded the maximum revolution range.	3. The movement amount from the home position exceeded a 32767 rotation or 37268 rotation in succession.	Make home position setting again.
E4	Parameter warning	Parameter outside setting range	Parameter value set from servo system controller is outside setting range	Set it correctly.
E6	Servo forced stop warning	EM1 is off.	External forced stop was made valid. (EM1 was turned off.)	Ensure safety and deactivate forced stop.
E7	Controller forced stop warning		Forced stop signal was entered into the servo system controller.	Ensure safety and deactivate forced stop.
E8	Cooling fan speed reduction warning	The speed of the servo amplifier decreased to or below the warning level. This warning is not displayed with MR-J3-70B/100B among servo amplifiers equipped with a cooling fan.	Cooling fan life expiration (Refer to section 2.5.)	Change the cooling fan of the servo amplifier.
			The power supply of the cooling fan is broken.	Change the servo amplifier.
E9	Main circuit off warning	Servo-on command was issued with main circuit power off.		Switch on main circuit power.
EC	Overload warning 2	Operation, in which a current exceeding the rating flew intensively in any of the U, V and W phases of the servo motor, was repeated.	During a stop, the status in which a current flew intensively in any of the U, V and W phases of the servo motor occurred repeatedly, exceeding the warning level.	1. Reduce the positioning frequency at the specific positioning address. 2. Reduce the load. 3. Replace the servo amplifier/ servo motor with the one of larger capacity.
ED	Output watt excess warning	The status, in which the output wattage (speed × torque) of the servo motor exceeded the rated output, continued steadily.	Continuous operation was performed with the output wattage (speed × torque) of the servo motor exceeding 150% of the rated output.	1. Reduce the servo motor speed. 2. Reduce the load.

Pour les codes d'erreur du servo-amplificateur MR-J4, consultez l'Annexe D.

Cette page est laissée vierge intentionnellement

6 ENTREPOSAGE ET EXPÉDITION

DANS CE CHAPITRE :

6.1 ENTREPOSAGE

La CM6200 est destinée à être stockée à l'intérieur dans un environnement où la température et l'humidité sont contrôlées. L'entreposage adéquat du CM6200prolongera sa durée de vie et préviendra tout dommage injustifié.

Avant l'entreposage, effectuez les actions suivantes :

1. Nettoyez la machine avec un solvant pour retirer la graisse, les copeaux métalliques, et l'humidité.
2. Purgez tous les liquides de l'unité de conditionnement pneumatique.

Entreposez le CM6200 dans son conteneur d'expédition d'origine. Conservez tous les articles d'emballage pour remballer la machine.

6.1.1 Eentreposage à court terme

Par entreposage à court terme, on entend un entreposage qui dure moins de trois mois. Pour l'entreposage à court terme :

1. Rétractez les broches de la pièce à usiner.
2. Retirez l'outillage.
3. Retirez les flexibles.
4. Retirez la machine de la pièce à usiner.
5. Nettoyez la machine pour retirer la saleté, la graisse, les copeaux métalliques et l'humidité. Vérifiez qu'il n'y a pas de salissures, de graisse, de copeaux ou d'autres débris sur la machine avant de la stocker.
6. Appliquer un produit anti-humidité aux surfaces non-peintes (LPS-2 pour le stockage à court terme et LPS-3 pour le stockage à long terme) pour éviter la corrosion.
7. Entreposez la machine dans une position stable sur un socle ou dans une caisse de stockage, selon les procédures en vigueur dans votre entreprise.

6.1.2 Entreposage à long terme

Par entreposage à long terme, on entend un entreposage qui dure plus de trois mois.

Procédez comme suit pour préparer le stockage à long terme :

1. Effectuez les étapes 1 à 6 pour un stockage à court terme (Section 6.1.2 à la page 118).
2. Ajoutez un sachet déshydratant dans le conteneur d'expédition. Remplacez-le selon les instructions du fabricant.
3. Stocker la caisse d'expédition dans un environnement protégé de la lumière directe du soleil avec une température < 21 °C (70 °F) et une humidité < 50 %.

6.2 EXPÉDITION

Le CM6200 peut être expédié dans son conteneur d'expédition d'origine.

6.3 MISE HORS SERVICE

Pour mettre la CM6200 hors service avant son élimination, retirez le moyeu de la table rotative du mandrin et éliminez l'ensemble d'entraînement séparément du reste des composants de la machine. Reportez-vous à l'annexe A pour des informations relatives à l'assemblage des composants.

ANNEXE A DESSINS D'ASSEMBLAGE

Liste des dessins

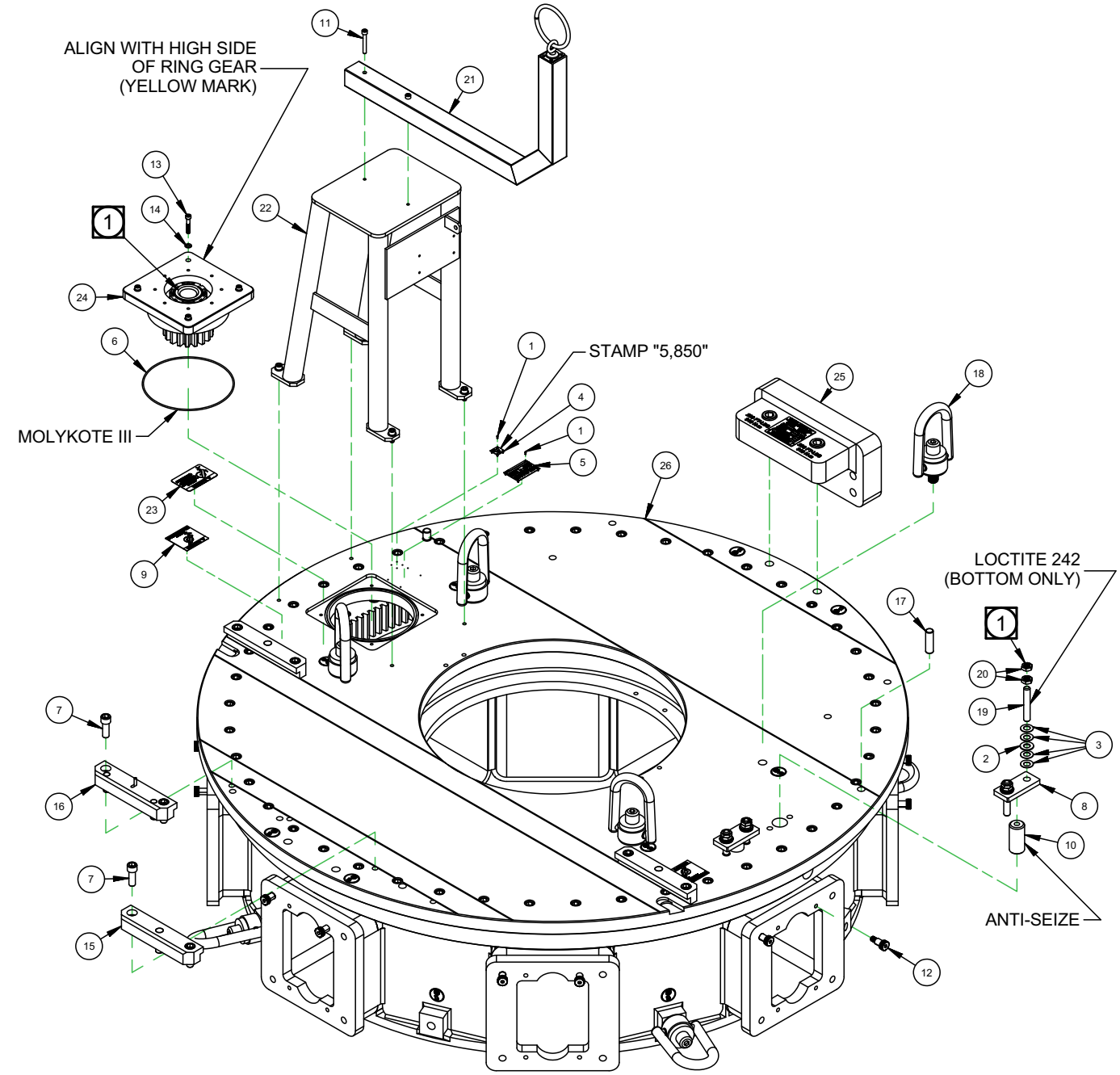

NOTES

1 ADJUST DRAG BRAKE JAM NUTS UNTIL TABLE ROTATES AT PINION WITH 4-5 IN-LBS OF TORQUE

FIGURE A-1. BLOC PLATEAU ROTATIF (P/N 62028)

1	8	10588	SCREW DRIVE #2 x 1/4 HOLE SIZE .089
2	4	11693	WASHER 5/8 FLTW SAE
3	16	27172	WASHER SPRING BELLEVILLE 5/8 X 1-1/4 X .040
4	1	29152	PLATE MASS CE
5	1	29154	PLATE SERIAL YEAR MODEL CE 2.0 X 3.0
6	1	44658	O-RING 1/8 X 8-3/4 ID X 9 OD SILICONE
7	8	46222	SCREW M16 X 2.0 X 55mm SHCS
8	2	46232	BAR BRAKE SHOE CLAMP
9	2	46286	LABEL CIRCULAR MILL CRUSH HAZARD
10	2	54165	SHOE BRAKE 1.6m CIRCULAR MILL
11	2	57874	SCREW M8 X 1.25 X 60MM SHCS
12	16	58202	SCREW 16MM DIA X 20MM X M12 X 1.75 SHLDCS
13	4	59349	SCREW M8 X 1.25 X 45MM SHCS
14	4	59432	WASHER M8 FLTW 16MM OD 1.6MM THICK
15	3	62601	CLAMP ARM PINNED
16	1	62602	CLAMP SAFETY STOP ASSY
17	2	62605	PIN DOWEL 3/4 DIA X 3
18	4	62606	HOIST RING M24 X 3 X 38MM 70 ID X 130 OD 225 OAL 9250 LBS 4200 KG SWIVEL
19	4	62612	STUD THREADED M16 X 2 X 100MM FULL THD
20	8	62613	NUT M16 X 2.0 JAMN
21	1	62616	TOWER HOSE CM6200
22	1	62869	ASSY GUARD ENCODER CM6200
23	1	62884	LABEL FLANGE FACERS IMPACT HAZARD
24	1	63743	ASSY PINION DRIVE CM6200
25	1	68425	ASSY LIFTING CM6200 LOAD TESTED 5000 KG
26	1	96031	ASSY TABLE ROTARY CM6200
ITEM	QTY	PART No.	DESCRIPTION
PARTS LIST			

FIGURE A-2. LISTE DE MATÉRIAUX BLOC PLATEAU ROTATIF (P/N 62028)

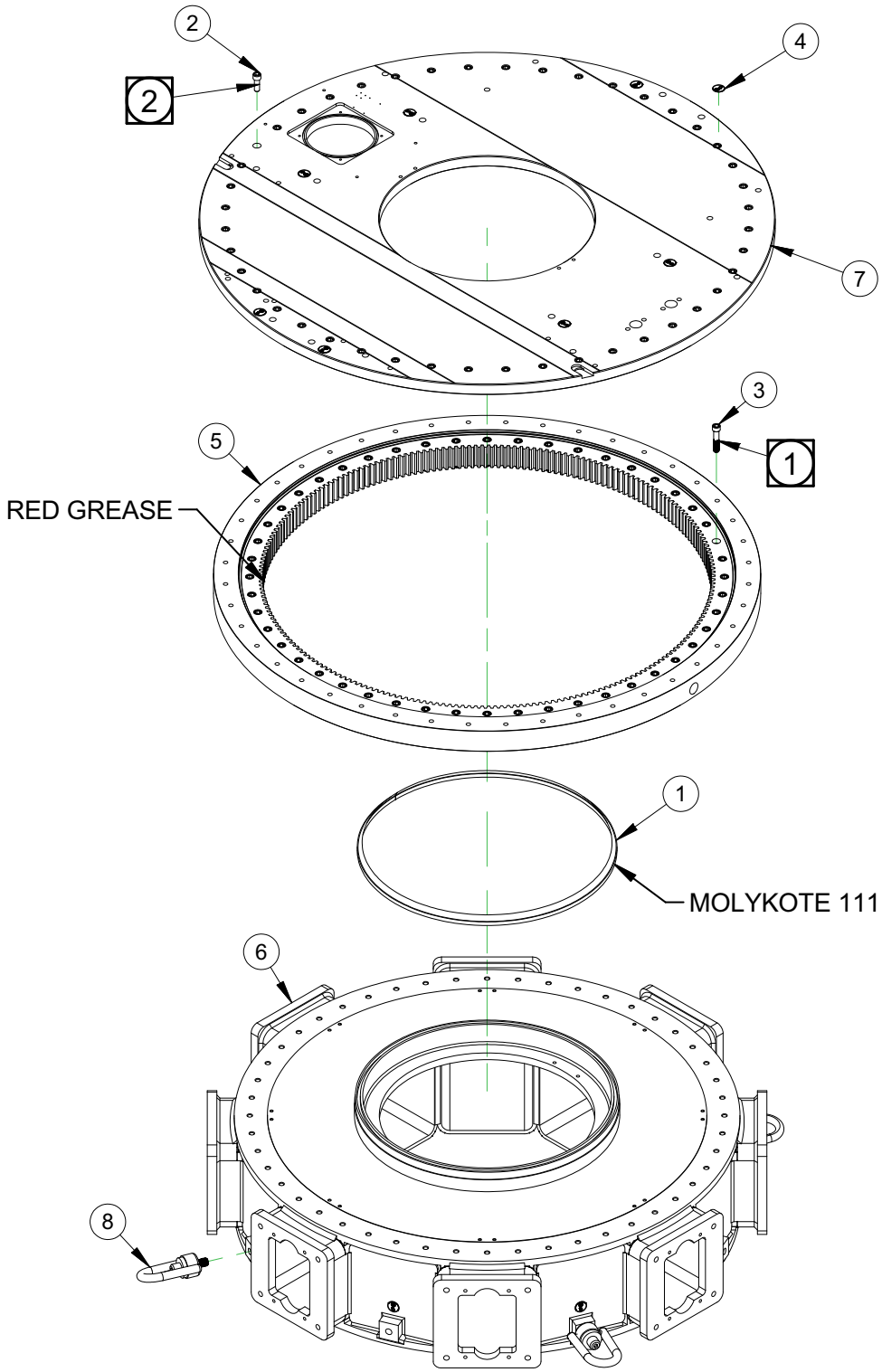

SEE SHEET 2 FOR PARTS LIST & TORQUE SPECIFICATIONS

FIGURE A-3. ASSEMBLAGE DE TABLE ROTATIVE (P/N 96031)

PARTS LIST			
ITEM	QTY	P/N:	DESCRIPTION
1	1	45623	PUSH-ON TRIM SEAL - FLEXIBLE SEGMENTED CORE
2	44	46222	SCREW M16 X 2.0 X 55mm SHCS
3	48	58106	SCREW M16 X 2.0 X 80 SHCS
4	16	59039	LABEL WARNING LIFT POINT ROUND 1.5"
5	1	61565	ASSY BRG AND GEAR KAYDON 66 OD PRELOADED
6	1	61967	HUB CHUCK CM6200
7	1	62600	PLATE TABLE ROTARY CM6200
8	4	62606	HOIST RING M24 X 3 X 38MM 70 ID X 130 OD 225 OAL 9250 LBS 4200 KG SWIVEL

1 TORQUE SPECIFICATION: CM6200 BEARING TO CHUCK

LABEL BOLT HOLES FROM 1 TO 48 CLOCKWISE AROUND THE BEARING

TIGHTEN THE BOLTS USING THE FOLLING PATTERN IN THREE STAGES 70 FT-LBS, 140 FT-LBS, 200 FT-LBS. NOTE: TORQUE VALUES ARE FOR LUBRICATED FASTENERS. ENSURE TO USE BLUE LOCTITE DURING ASSEMBLY.

1 - 25 - 13 - 37 7 - 31 - 19 - 43 4 - 28 - 16 - 40 10 - 34 - 22 - 46
2 - 26 - 14 - 38 3 - 27 - 15 - 39 5 - 29 - 17 - 41 6 - 30 - 18 - 42
8 - 32 - 20 - 44 9 - 33 - 21 - 45 11 - 35 - 23 - 47 12 - 36 - 24 - 48

2 TORQUE SPECIFICATION: CM6200 TOP PLATE TO BEARING

LABEL BOLT HOLES FROM 1 TO 44 CLOCKWISE AROUND THE TOP PLATE

TIGHTEN THE BOLTS USING THE FOLLING PATTERN IN THREE STAGES 70 FT-LBS, 140 FT-LBS, 200 FT-LBS. NOTE: TORQUE VALUES ARE FOR LUBRICATED FASTENERS. ENSURE TO USE BLUE LOCTITE DURING ASSEMBLY.

1 - 23 - 12 - 34 6 - 28 - 17 - 39 3 - 25 - 14 - 36 8 - 30 - 19 - 41
4 - 26 - 15 - 37 9 - 31 - 20 - 42 2 - 24 - 13 - 35 7 - 29 - 18 - 40
5 - 27 - 16 - 38 10 - 32 - 21 - 43 11 - 33 - 22 - 44

FIGURE A-4. LISTE DES PIÈCES DE L'ASSEMBLAGE DE LA TABLE ROTATIVE (P/N 96031)

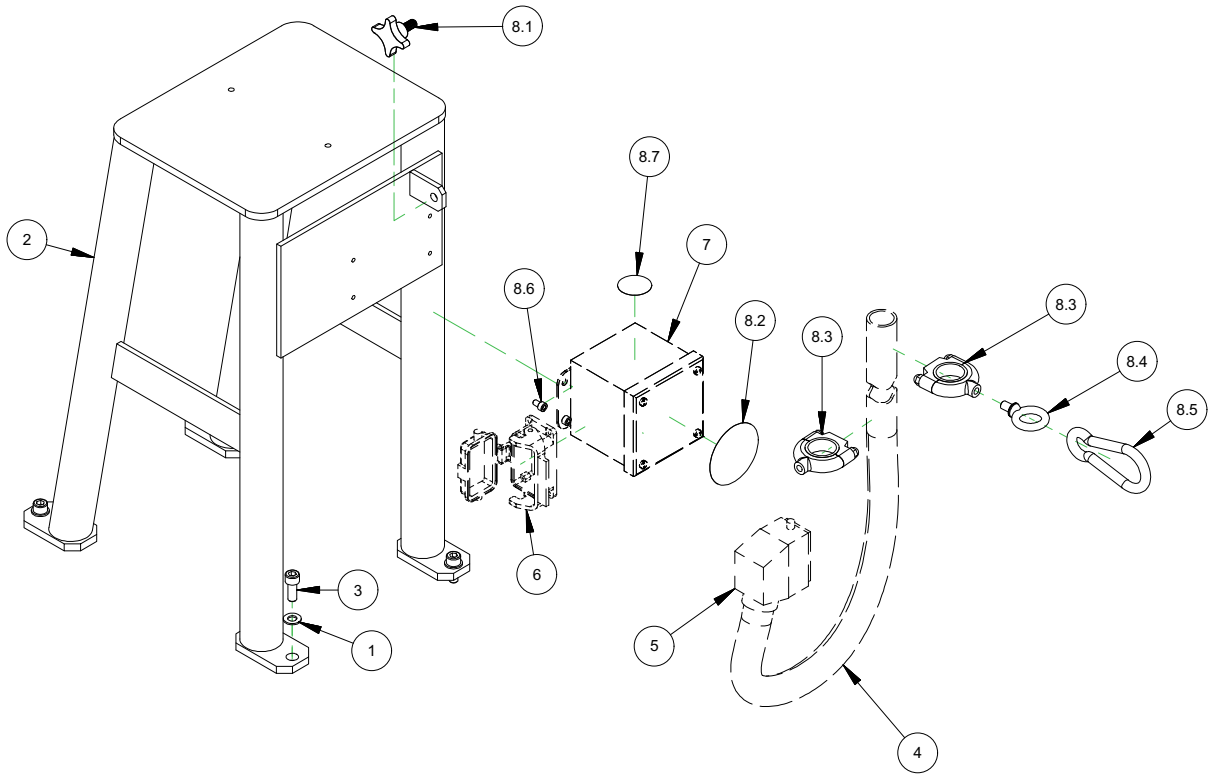

* ITEMS 4, 5, 6, AND 7 IN PHANTOM ARE FOR REFERENCE ONLY

PARTS LIST			
ITEM	QTY	PART No.	DESCRIPTION
1	4	62875	WASHER M10 FLTW DIN 125
2	1	62615	GUARD ENCODER CM6200
3	4	35339	SCREW M10 X 1.5 X 25mm SHCS
4	1	N/A*	CARFLEX X-FLEX 1 INCH NONMETALLIC CONDUIT
5	1	N/A*	HAN 10B-gs-R-29 HOOD SIDE ENTRY METAL
6	1	N/A*	HAN 10B-agg-LB-K HOUSING BULKHEAD MOUNTING METAL
7	1	N/A*	4 X 4 X 4 SCREW COVER SC JUNCTION BOX
8	1	63180	ASSY HARDWARE HOSE AND ENCODER GUARD CM6200
8.1	1	55463	KNOB FOUR ARM 2 DIA X 3/8-16 THREAD 3/4 L MODIFIED
8.2	1	82195	LABEL WARNING - LOCKOUT/ELECTRICAL GRAPHIC 3" DIA BLUE
8.3	2	55290	CONDUIT CLEAN ROOM HANGER 1-1/4 OD 3/8-16 THREAD
8.4	1	19239	EYE LIFTING 3/8 MODIFIED
8.5	1	55393	SPRING SNAP 5/8 SNAP O X 4-3/4 L BLK
8.6	4	57281	SCREW M6 X 1.0 X 10MM SHCS
8.7	1	59044	LABEL WARNING - CONSULT OPERATOR'S MANUAL

FIGURE A-5. BLOC PROTECTEUR ENCODEUR (P/N 62869)

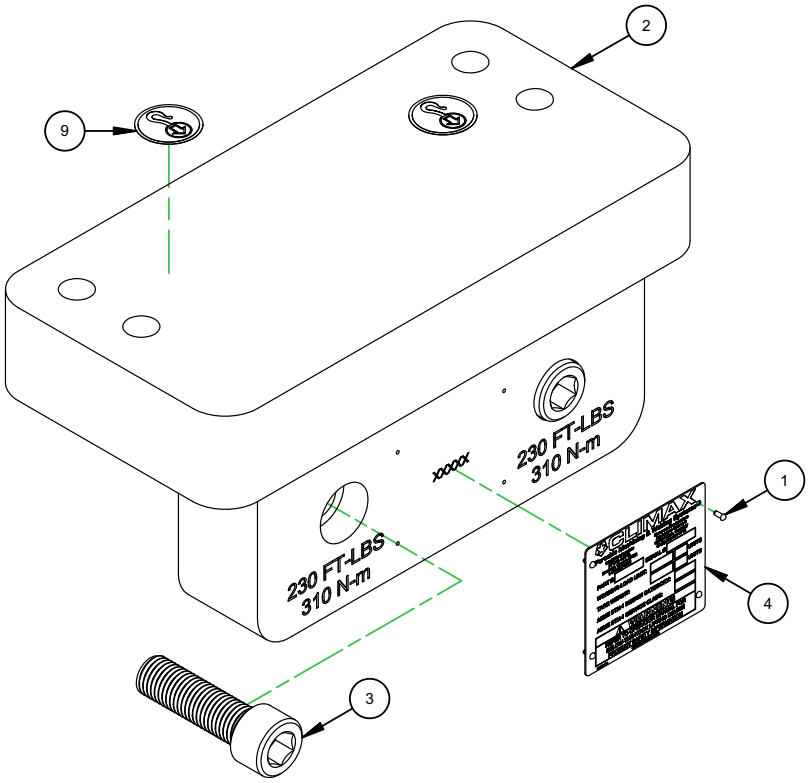

BELOW THE HOOK LIFTING INFO TAG

PART NUMBER:	68425
SERIAL NUMBER:	
WORKING LOAD LIMIT:	6000 KG
TARE WEIGHT:	55 KG
ASME BTH-1 DESIGN CATEGORY:	A
ASME BTH-1 SERVICE CLASS:	0

PARTS LIST			
ITEM	QTY	PART No.	DESCRIPTION
1	4	10588	SCREW DRIVE #2 x 1/4 HOLE SIZE .089
2	1	68423	PLATE LIFTING CM6200
3	2	68426	SCREW M24 X 3.0 X 80MM SHCS
4	1	69422	TAG BELOW THE HOOK LIFTING INFO AND SERIAL NUMBER
9	2	59039	LABEL WARNING LIFT POINT ROUND 1.5"

FIGURE A-6. BLOC DE LEVAGE TESTÉ EN CHARGE (P/N 68425)

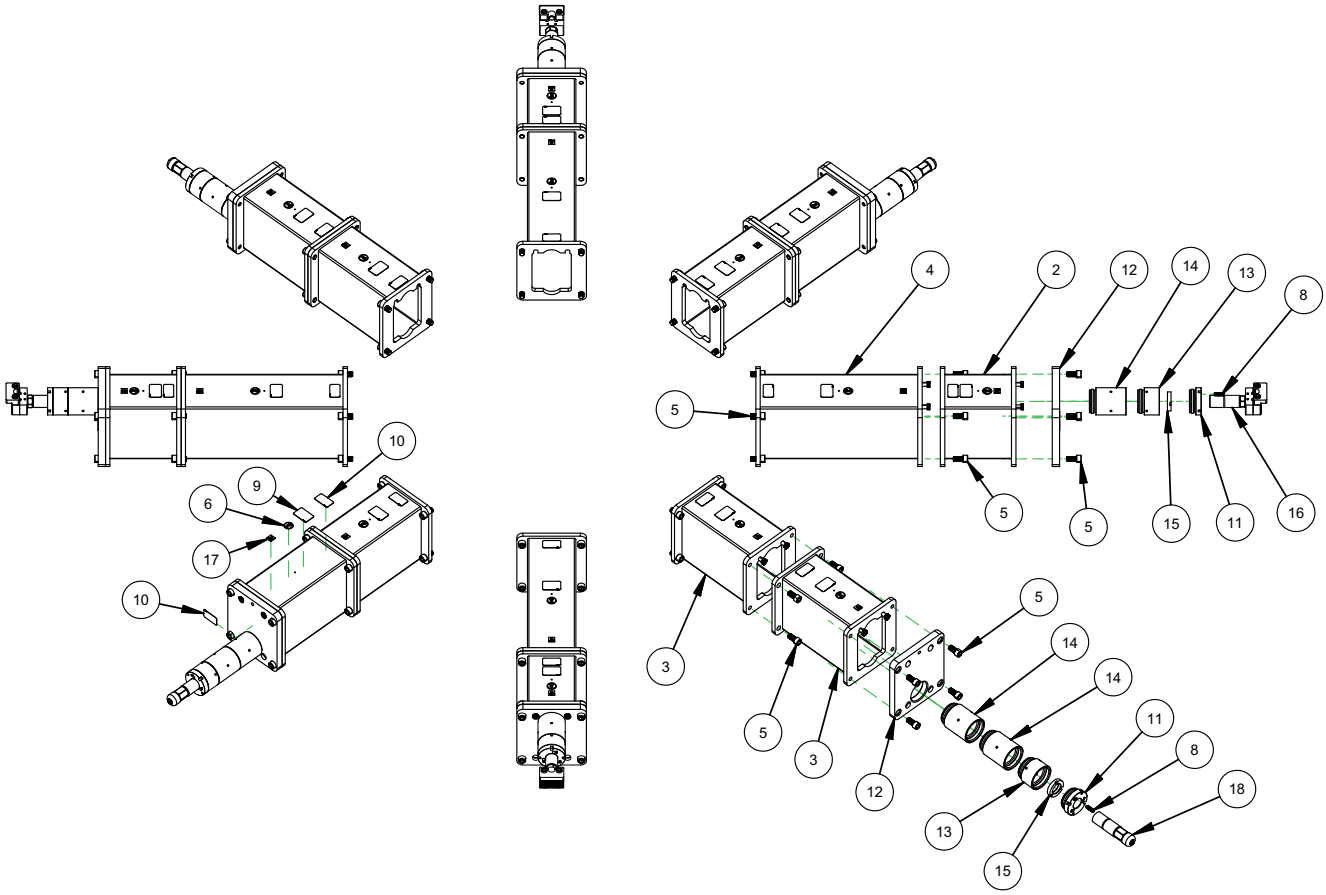

PARTS LIST			
ITEM	QTY	PART No.	DESCRIPTION
1	1	19700	(NOT SHOWN) CONTAINER SHIPPING FLAT ROOF 20 X 8.75 X 10.5
2	4	57724	WELDMENT STANDOFF 12.5 FF8200
3	8	57851	WELDMENT STANDOFF 17.5 FF8200
4	4	57852	WELDMENT STANDOFF 27.5 FF8200
5	96	58203	SCREW M20 X 2.5 X 40MM SHCS
6	16	59039	LABEL WARNING LIFT POINT ROUND 1.5"
7	4	63954	(NOT SHOWN) LIFTING EYE M6 X 1 X 12 THREAD 19 ID 460 LBS 210 KG
8	24	74499	SCREW M12 X 1.75 X 40mm SSSFP
9	16	79385	LABEL WARNING - LIFT SUB ASSY ONLY GRAPHIC 2 X 3
10	24	82157	LABEL CAUTION - TORQUE 150 FT-LBS (203 N-M) GRAPHIC 3 X 1.7
11	8	89717	CAP END 4.50 DIA 4-4 OD THREAD 2-8 ID THREAD
12	8	89718	PLATE BASE CHUCK
13	8	89720	LEG CHUCK TUBE 4.5 OD X 2.5 THREADED
14	12	89721	LEG CHUCK TUBE 4.5 OD X 5.0 THREADED
15	8	89726	NUT JACKING LOCK 2-8
16	4	90836	ASSY FOOT CHUCK ADJUSTABLE
17	16	91217	PLATE MASS CE 1.0 X 1.0 KG ADHESIVE BACKED
18	4	91232	ASSY FOOT NON LEVELING GRIPPER LARGE FF LINE

FIGURE A-7. MONTAGE EN DIAMÈTRE INTERNE (P/N 62038)

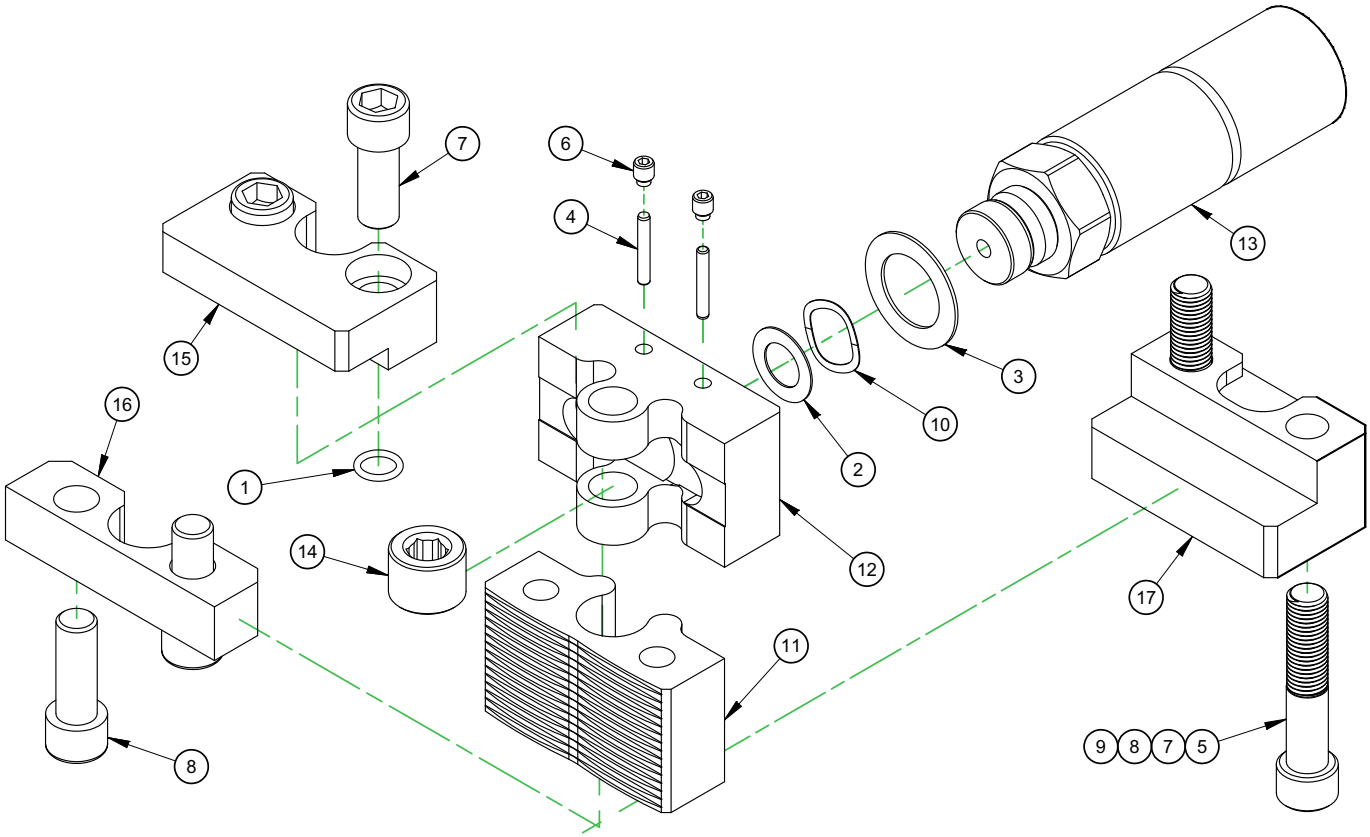

PARTS LIST			
ITEM	QTY	PART No.	DESCRIPTION
1	2	10611	RING O 3/32 X 9/16 ID X 3/4 OD
2	1	11739	WASHER THRUST .750 ID X 1.250 OD X .0312
3	1	16666	WASHER THRUST 1.250 ID X 1.937 OD X .060
4	2	19735	PIN DOWEL 3/16 DIA X 1-1/4
5	2	44227	SCREW M16 X 2.0 X 200 SHCS
6	2	44257	SCREW M8 X 1.25 X 10mm SSSDP
7	4	44905	SCREW M16 X 2.0 X 40mm SHCS
8	2	46222	SCREW M16 X 2.0 X 55mm SHCS
9	2	58106	SCREW M16 X 2.0 X 80 SHCS
10	1	58244	WASHER SPRING WAVE 1.235 OD X .961 ID X .014
11	1	63582	JAW ADJUSTER CM6200
12	1	63583	BASE ADJUSTER CM6200
13	1	63584	JAW SCREW CM6200
14	1	63585	SCREW M30 X 1.5 X .875 HOLLOW LOCK MOD
15	1	63586	FINGER SETUP EXTENSION CM6200
16	1	63842	RESTRAINT SAFETY WELD PLATE CM6200
17	1	63853	CLAMP INTERNAL FLANGE CM6200
18	2	64086	SCREW M16 X 2.0 X 120 SHCS
19	2	64087	SCREW M16 X 2.0 X 160 SHCS

FIGURE A-8. PIED DE MANDRIN RÉGLABLE (P/N 89730)

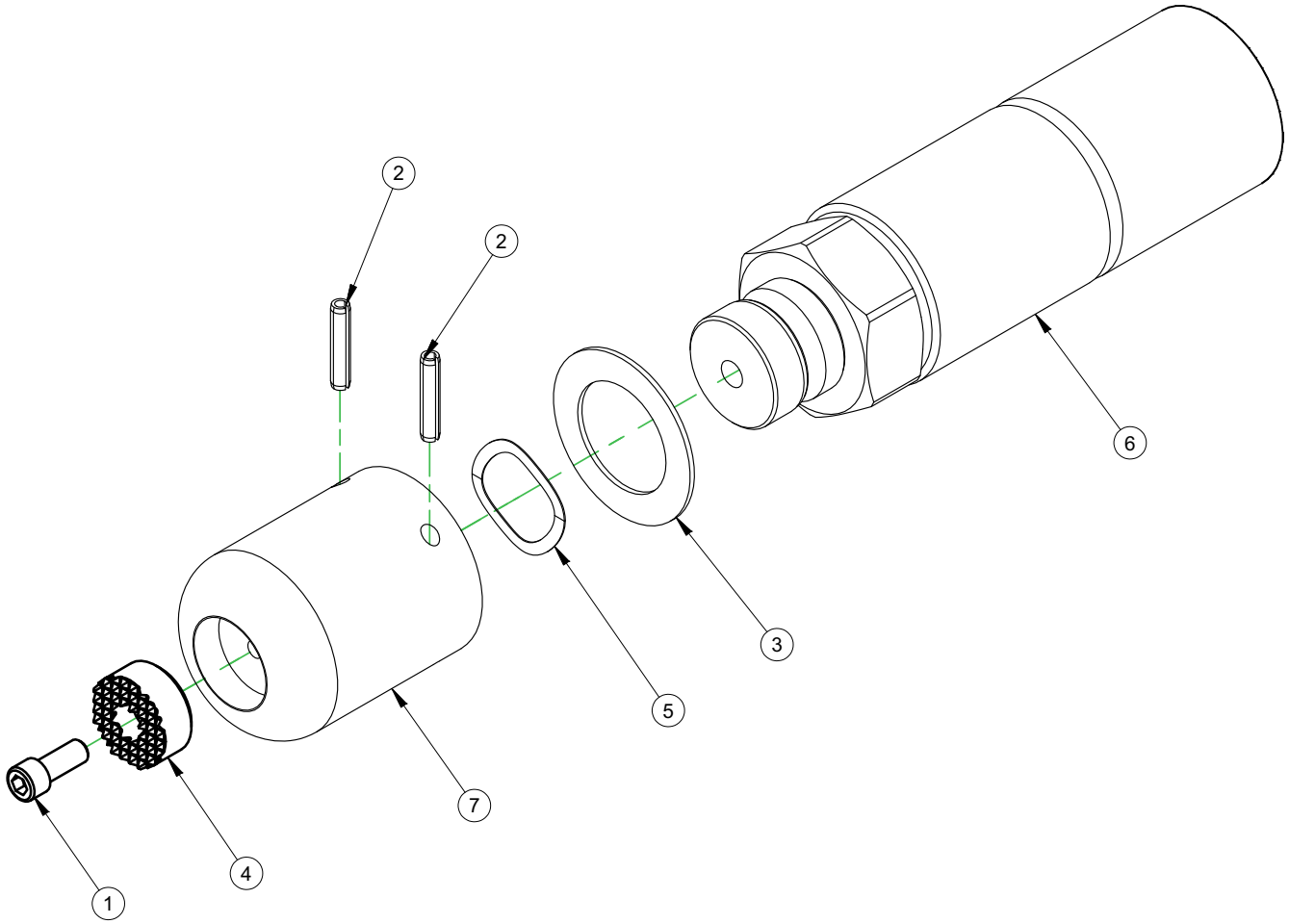

PARTS LIST			
ITEM	QTY	PART No.	DESCRIPTION
1	1	12418	SCREW 1/4-20 X 5/8 SHCS
2	2	12959	PIN ROLL Ø3/16 X 1
3	1	16666	WASHER THRUST 1.250 ID X 1.937 OD X .060
4	1	41644	GRIPPER SERRATED HSS 1 DIAM X 1/2 CBORED
5	1	58244	WASHER SPRING WAVE 1.235 OD X .961 ID X .014
6	1	63584	JAW SCREW CM6200
7	1	91186	CAP FOOT NON LEVELING GRIPPER CM6200

FIGURE A-9. ENSEMBLE DE PIED NON NIVELANT (P/N 91317)

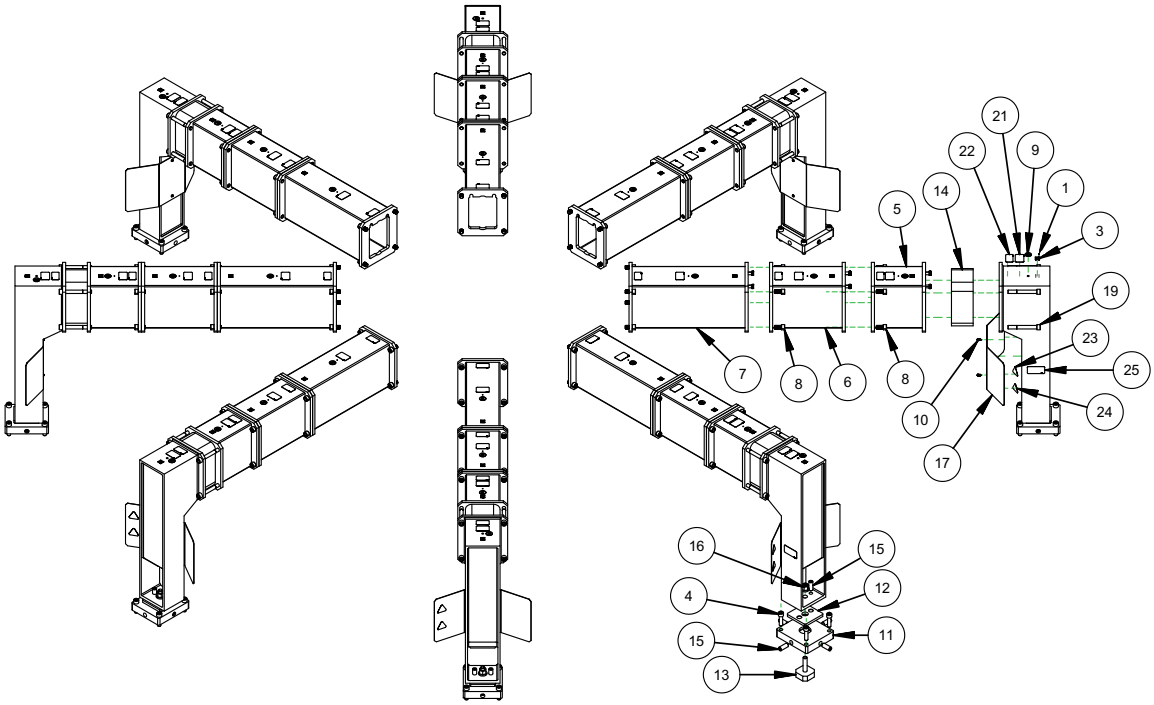

PARTS LIST			
ITEM	QTY	PART No.	DESCRIPTION
1	128	10588	SCREW DRIVE #2 x 1/4 HOLE SIZE .089
2	1	19700	(NOT SHOWN) CONTAINER SHIPPING FLAT ROOF 20 X 8.75 X 10.5
3	32	29152	PLATE MASS CE
4	32	56192	SCREW M20 X 2.5 X 70 MM SHCS
5	8	57724	WELDMENT STANDOFF 12.5 FF8200
6	8	57851	WELDMENT STANDOFF 17.5 FF8200
7	8	57852	WELDMENT STANDOFF 27.5 FF8200
8	96	58203	SCREW M20 X 2.5 X 40MM SHCS
9	32	59039	LABEL WARNING LIFT POINT ROUND 1.5"
10	16	59827	SCREW M8 X 1.25 X 16MM BHSCS
11	8	60751	PLATE CENTERING OD MOUNT FF8200
12	8	60752	PLATE WASHER OD MOUNT FF8200
13	8	60753	STUD HOLD DOWN M24 OD MOUNT FF8200
14	8	60755	STANDOFF 5 INCH OD MOUNT FF8200
15	48	60756	SCREW M24 X 3.0 X 60MM SSSFP
16	8	60757	NUT M24 X 3.0 FLANGED
17	8	61433	SHIELD OD MOUNT FF8200
18	8	62687	LEG VERTICAL SUPPORT OD MOUNT CM6200
19	32	63935	SCREW M20 X 2.5 X 170MM SHCS
20	4	63954	(NOT SHOWN) LIFTING EYE M6 X 1 X 12 THREAD 19 ID 460 LBS 210 KG
21	32	79385	LABEL WARNING - LIFT SUB ASSY ONLY GRAPHIC 2 X 3
22	32	82157	LABEL CAUTION - TORQUE 150 FT-LBS (203 N-M) GRAPHIC 3 X 1.7
23	8	82163	LABEL WARNING - HAND CRUSH GRAPHIC 1.95"
24	8	82164	LABEL WARNING - BODY CRUSH GRAPHIC 1.95"
25	8	82172	LABEL DANGER - GUARDS OD MOUNT GRAPHIC 4 X 2

FIGURE A-10. MONTAGE EN DIAMÈTRE EXTERNE (P/N 62039)

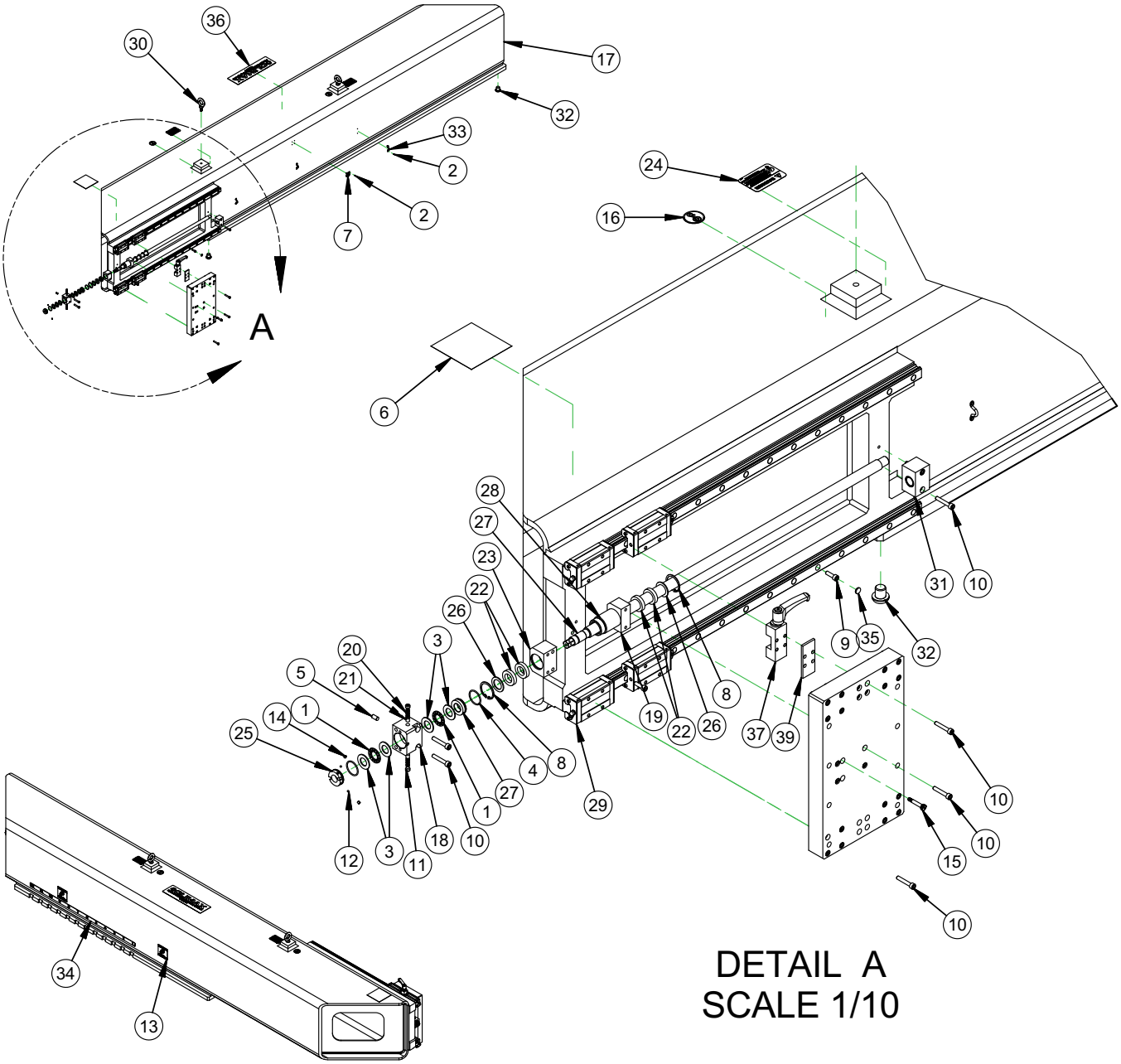

FIGURE A-11. BLOC BRAS D'USINAGE (P/N 72676)

PARTS LIST			
ITEM	QTY	P/N:	DESCRIPTION
1	2	10538	BRG THRUST .625 ID X 1.125 OD X .0781
2	10	10588	SCREW DRIVE #2 x 1/4 HOLE SIZE .089
3	4	11165	WASHER THRUST .625 ID X 1.125 OD X .060
4	2	15731	RING O 1/16 X 1 ID X 1-1/8 OD
5	1	20166	PIN DOWEL 1/4 DIA X 1/2
6	1	27462	LABEL WARNING STICKER SINGLE POINT MACHINES
7	1	29152	PLATE MASS CE
8	2	33777	RING SNAP 1-3/16 ID (30MM)
9	30	35009	SCREW M6 X 1.0 X 20 SHCS
10	28	35504	SCREW M6 X 1.0 X 35mm SHCS
11	2	36087	SCREW M8 X 1.25 X 6MM SSSFP
12	2	43489	BALL NYLON 1/8 DIA
13	2	46286	LABEL CIRCULAR MILL CRUSH HAZARD
14	2	53365	SCREW M4 X 0.7 X 4 mm SSSFP
15	2	57581	SCREW 6MM DIA X 25MM X M5 X 0.8 SHLDCS
16	2	59039	LABEL WARNING LIFT POINT ROUND 1.5"
17	1	61980	TOOL ARM CM6200
18	1	62281	BEARING BLOCK BALLSCREW 20MM
19	1	62321	HOLDER FELT WIPER MILLING HEAD
20	12	62376	WASHER SPRING BELLEVILLE 1/8 ID X 1/4 OD X .013 THK
21	2	62378	ROD POLYURETHANE 1/4 DIA X 1/4 LENGTH 95 SHORE A
22	4	62379	SEAL FELT 16MM BALL SCREW 1.015 OD MILLING HEAD
23	1	62423	MOUNT BALL NUT MILLING HEAD
24	2	62888	LABEL DANGER PART LIFT POINT ONLY 2 X 3
25	1	62898	BRG RETAINING NUT 5/8-18 O-RING SEAL SETSCREW LOCK
26	2	62903	WASHER SHIM .75 ID 1.125 OD .062 THICK STEEL
27	1	62930	BALL SCREW 20MM RADIAL TRAVEL CM6200
28	1	62960	BALL SCREW NUT 20MM X 5MM LEAD LEFT HAND 33 MM OD EICHENBERGER ROUND
29	2	62961	SLIDE RAIL THK SHS25 880MM LG PRELOADED METAL SCRAPERS 2 BLOCKS
30	2	62964	LIFTING EYE M12 X 1.75 X 24 THREAD 30 ID 2270 LBS 1030 KG
31	1	62965	TAIL SUPPORT BALL SCREW RADIAL FEED
32	2	62969	SCREW 3/4-10 X 3/4 BHSCS
33	3	64133	GUIDE WIRE ROPE 3/8"
34	1	64156	LABEL COUNTERWEIGHT & ARM POSITION CM6200
35	30	68501	CAP RAIL 25MM METAL THK SHS
36	1	70228	LABEL CLIMAX LOGO 3.5 X 12.5
37	1	72262	ZIMMER BRAKE 25mm RAIL
38	1	72675	PLATE RADIAL TRAVEL CM6200
39	1	72869	ADAPTER BRAKE 25mm RAIL 4mm THICK

FIGURE A-12. LISTE DE MATÉRIAUX BLOC BRAS D'USINAGE (P/N 72676)

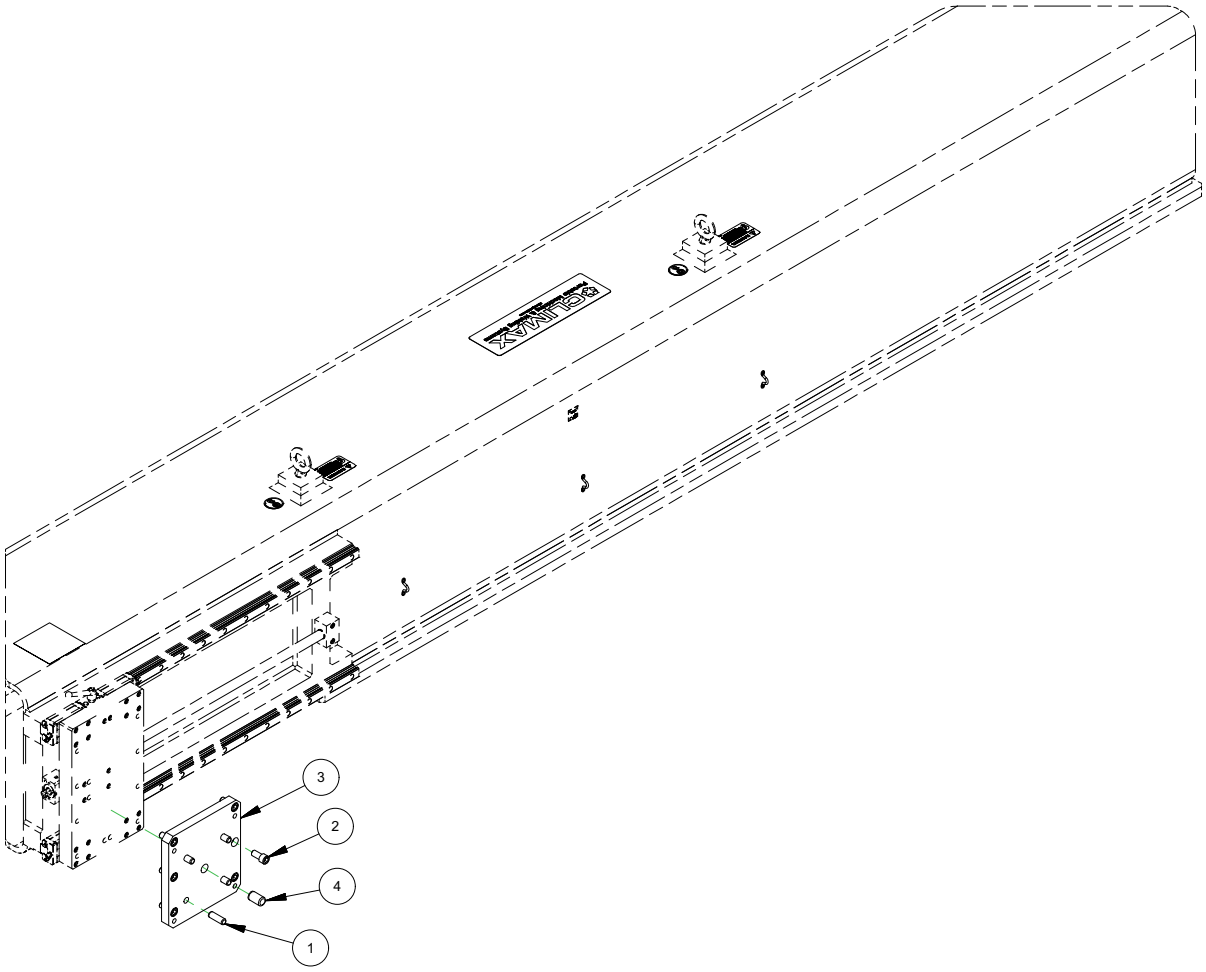

PARTS LIST			
ITEM	QTY	PART No.	DESCRIPTION
1	4	11832	PIN DOWEL 1/2 DIA X 1-1/2
2	6	42094	SCREW M12 X 1.75 X 25mm SHCS
3	1	62921	PLATE MILL TRAMMING CM6200
4	1	63557	PIN DOWEL 3/4 DIA X 1-1/4

FIGURE A-13. BRAS D'USINAGE BLOC TÊTE DE FRAISAGE (P/N 63124)

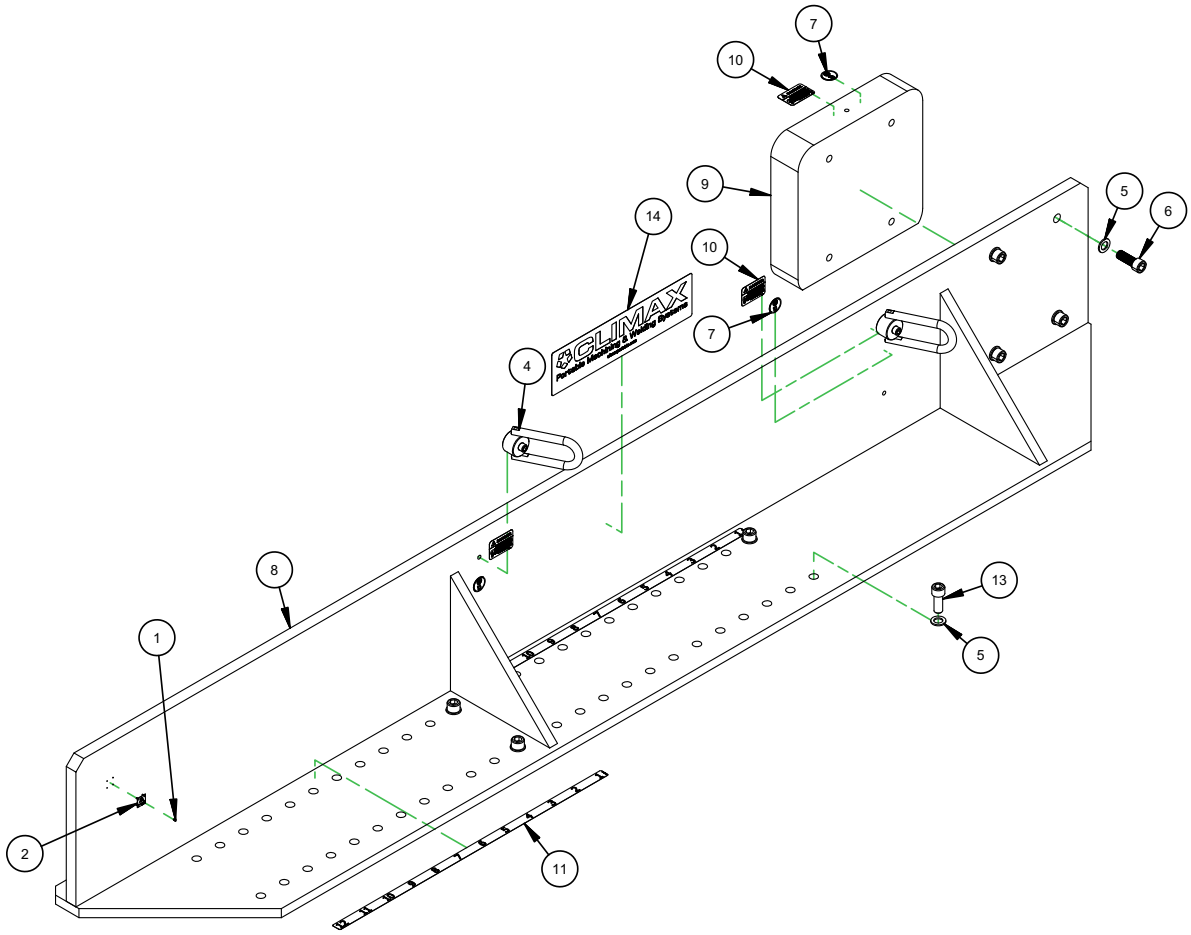

PARTS LIST			
ITEM	QTY	P/N:	DESCRIPTION
1	4	10588	SCREW DRIVE #2 x 1/4 HOLE SIZE .089
2	1	29152	PLATE MASS CE
4	2	43001	HOIST SWIVEL RING M12 X 1.75 1050 KG
5	8	57888	WASHER FIXTURING 21MM ID X 35MM OD X 3MM CASE HARDENED
6	4	58743	SCREW M20 X 2.5 X 55mm SHCS
7	3	59039	LABEL WARNING LIFT POINT ROUND 1.5"
8	1	62059	ARM COUNTERWEIGHT CM6200
9	1	62060	COUNTERWEIGHT CM6200
10	3	62888	LABEL DANGER PART LIFT POINT ONLY 2 X 3
11	2	64156	LABEL COUNTERWEIGHT & ARM POSITION CM6200
13	4	40459	SCREW M20 X 2.5 X 50 mm SHCS
14	1	70229	LABEL CLIMAX LOGO 4.75 X 18

FIGURE A-14. BLOC BRAS À CONTREPOIDS (P/N 62031)

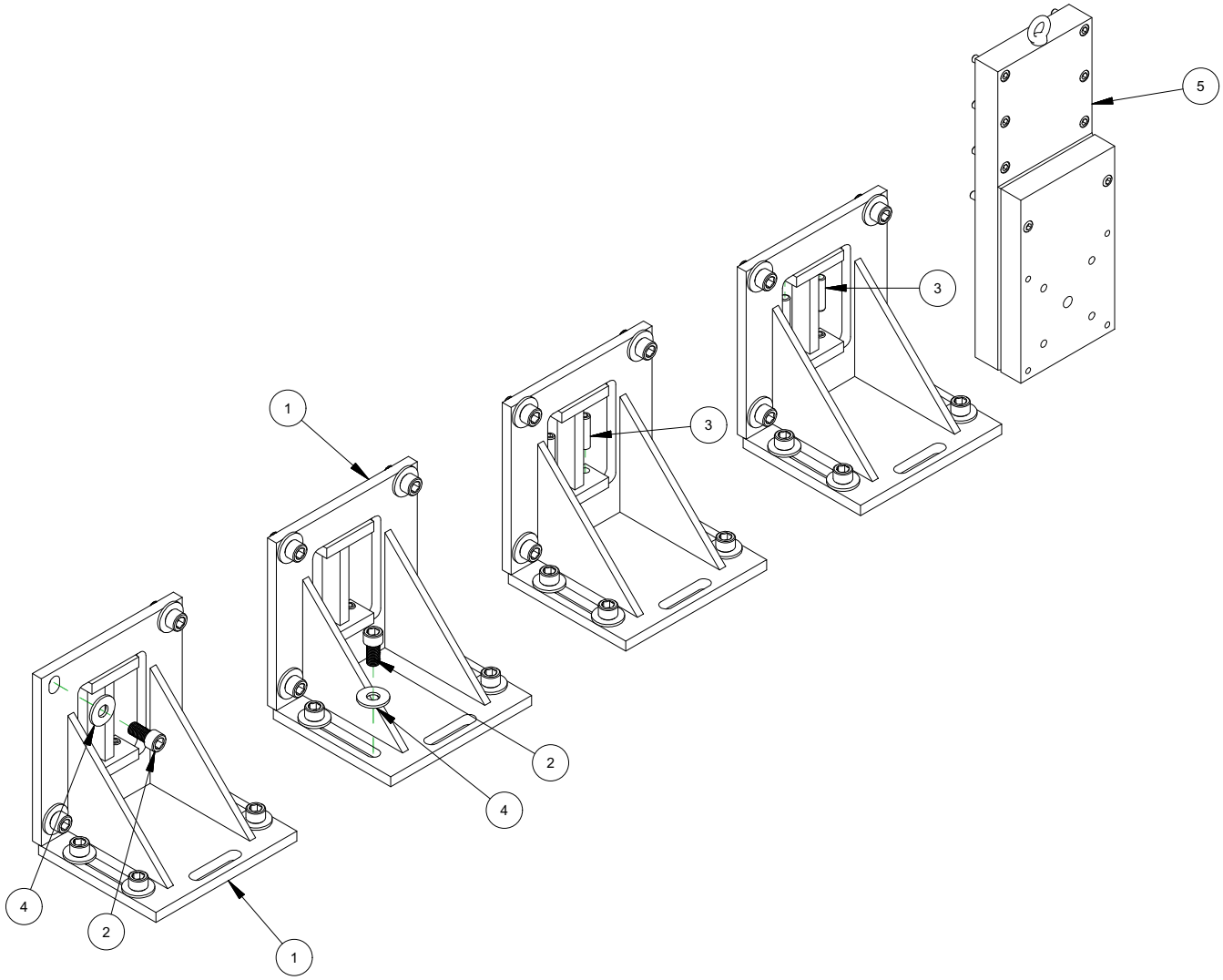

5	1	65840	ASSY EXTENSION MILLING HEAD
4	32	12339	WASHER 3/4 FLATW
3	16	57348	SCREW M16 X 2 X 60mm SSSFP
2	32	58203	SCREW M20 X 2.5 X 40MM SHCS
1	4	62887	BRACKET FACE MOUNT CM6200
ITEM	QTY	PART No.	DESCRIPTION
PARTS LIST			

FIGURE A-15. MONTAGE SUR UNE FACE (P/N 63106)

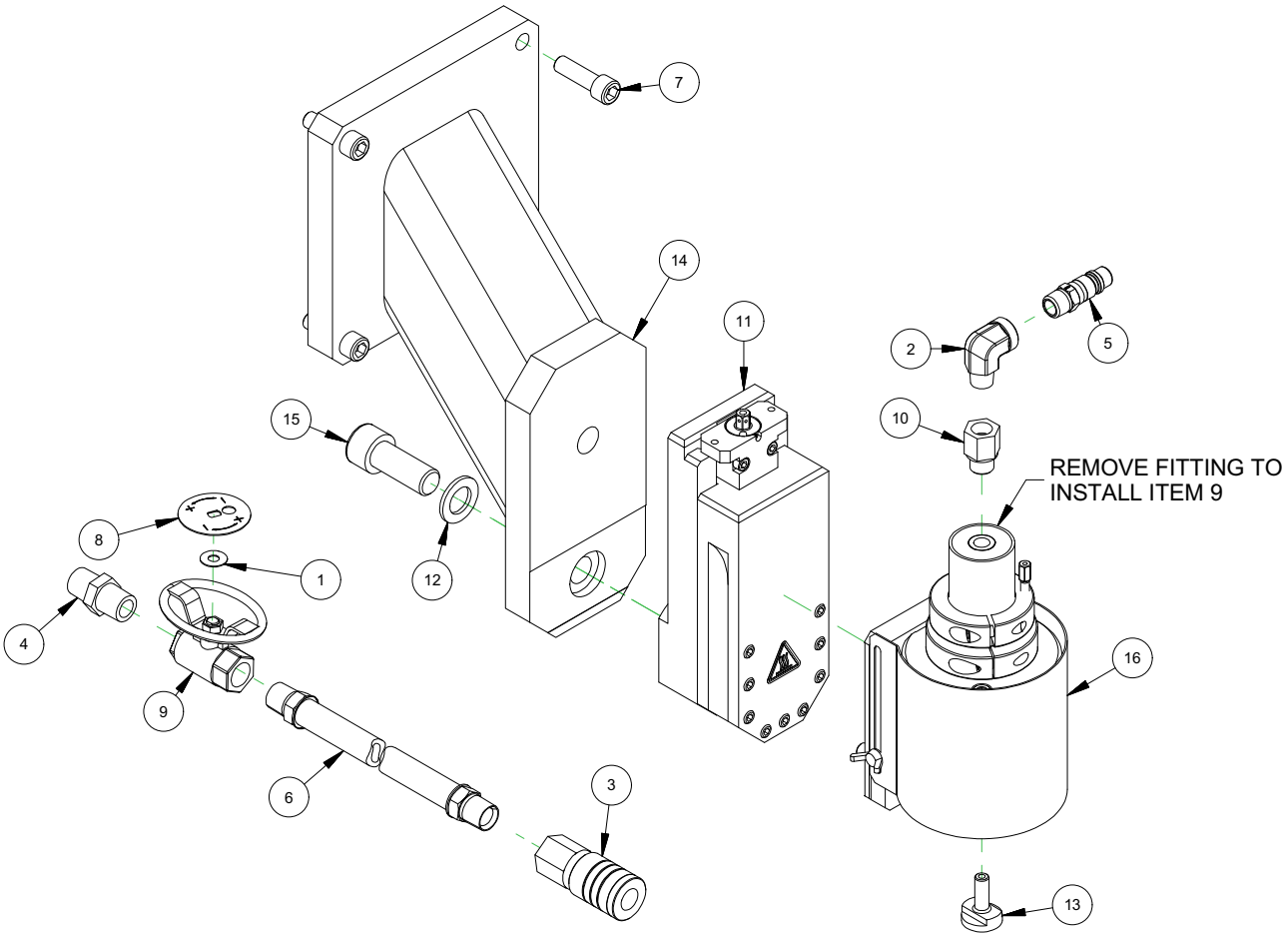

PARTS LIST			
ITEM	QTY	PART No.	DESCRIPTION
1	1	10770	WASHER THRUST .75 OD X .312 ID X .03
2	1	11132	FTG ELBOW 3/8 NPTM X 3/8 NPTF STREET 90 DEG
3	1	13208	FTG QUICK COUPLER 1/2B 1/2NPTF FEMALE AIR
4	1	14704	FTG NIPPLE 1/2NPTM CLOSE HEX
5	1	16615	FTG QUICK COUPLER 1/2B 3/8 NPTM MALE AIR
6	1	32196	HOSE ASSY 801 1/2 X 1/2 NPTMS ENDS X 180
7	4	35215	SCREW M12 X 1.75 X 40mm SHCS
8	1	35772	LABEL DIRECTION OVAL HANDLE BALL VALVE
9	1	36328	VALVE BALL 1/2NPTF OVAL HANDLE
10	1	52734	FTG ADPTER 3/8 BSPP MALE X 3/8 NPTF
11	1	57781	TOOL HEAD ASSY FF LINE
12	1	57888	WASHER FIXTURING 21MM ID X 35MM OD X 3MM CASE HARDENED
13	1	62624	ARBOR GRINDING WHEEL CBN 10MM SHANK M8 THREAD
14	1	62984	ADAPTER SINGLE POINT TOOL HEAD TO MILLING ARM
15	1	63018	SCREW M20 X 1.5 X 50MM SHCS
16	1	63063	ASSY GRINDING ATTACHMENT

FIGURE A-16. FIXATION MEULAGE AVEC BLOC TÊTE D'OUTIL (P/N 63239)

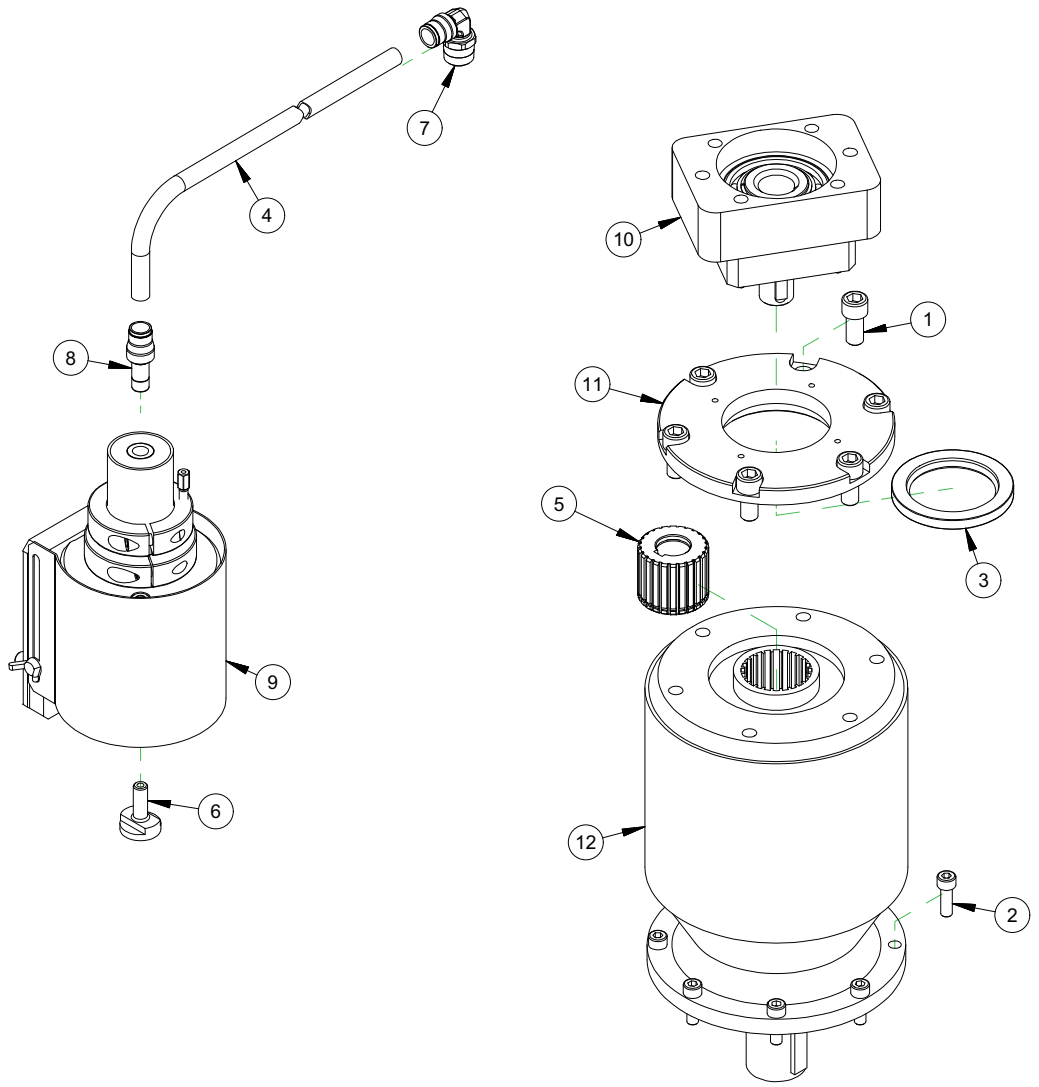

PARTS LIST			
ITEM	QTY	PART No.	DESCRIPTION
1	6	42094	SCREW M12 X 1.75 X 25mm SHCS
2	8	42494	SCREW M8 X 1.25 X 25mm SHCS
3	1	44964	SEAL OIL 60 x 85 x 8 DOUBLE LIP
4	130	48281	TUBING PARFLEX 1/2 OD X 3/8 ID POLYURETHANE BLACK X 130"
5	1	51928	SPLINE COUPLING BREVINI
6	1	62624	ARBOR GRINDING WHEEL CBN 10MM SHANK M8 THREAD
7	1	62681	FTG ELBOW 1/2 NPTM x 1/2 O.D. PRESTOLOK TUBING
8	1	62682	FTG ADAPTER 12MM TUBE X 1/2 PRESTOLOK TUBING
9	1	63063	ASSY GRINDING ATTACHMENT
10	1	63072	ASSY TORQUE LIMITER 24 MM OUTPUT
11	1	63714	FLANGE ADAPTER BREVINI UNIVERSAL TO NEMA 42
12	1	63731	REDUCER 162.8:1 PLANETARY

FIGURE A-17. MEULEUSE POUR SP CM6200 AVEC BLOC RÉDUCTEUR (P/N 63240)

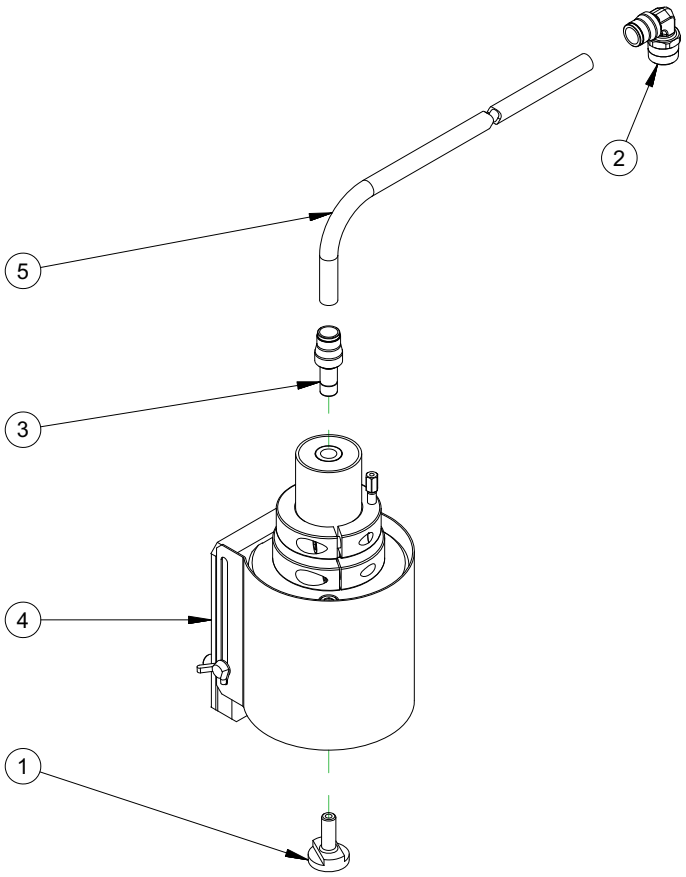

PARTS LIST			
ITEM	QTY	P/N:	DESCRIPTION
1	1	62624	ARBOR GRINDING WHEEL CBN 10MM SHANK M8 THREAD
2	1	62681	FTG ELBOW 1/2 NPTM x 1/2 O.D. PRESTOLOK TUBING
3	1	62682	FTG ADAPTER 12MM TUBE X 1/2 PRESTOLOK TUBING
4	1	63063	ASSY GRINDING ATTACHMENT
5	130IN	79025	TUBING PARFLEX 1/2 OD X .328 ID POLYURETHANE BLACK

FIGURE A-18. MEULEUSE POUR SP PNEUMATIQUE (P/N 62537)

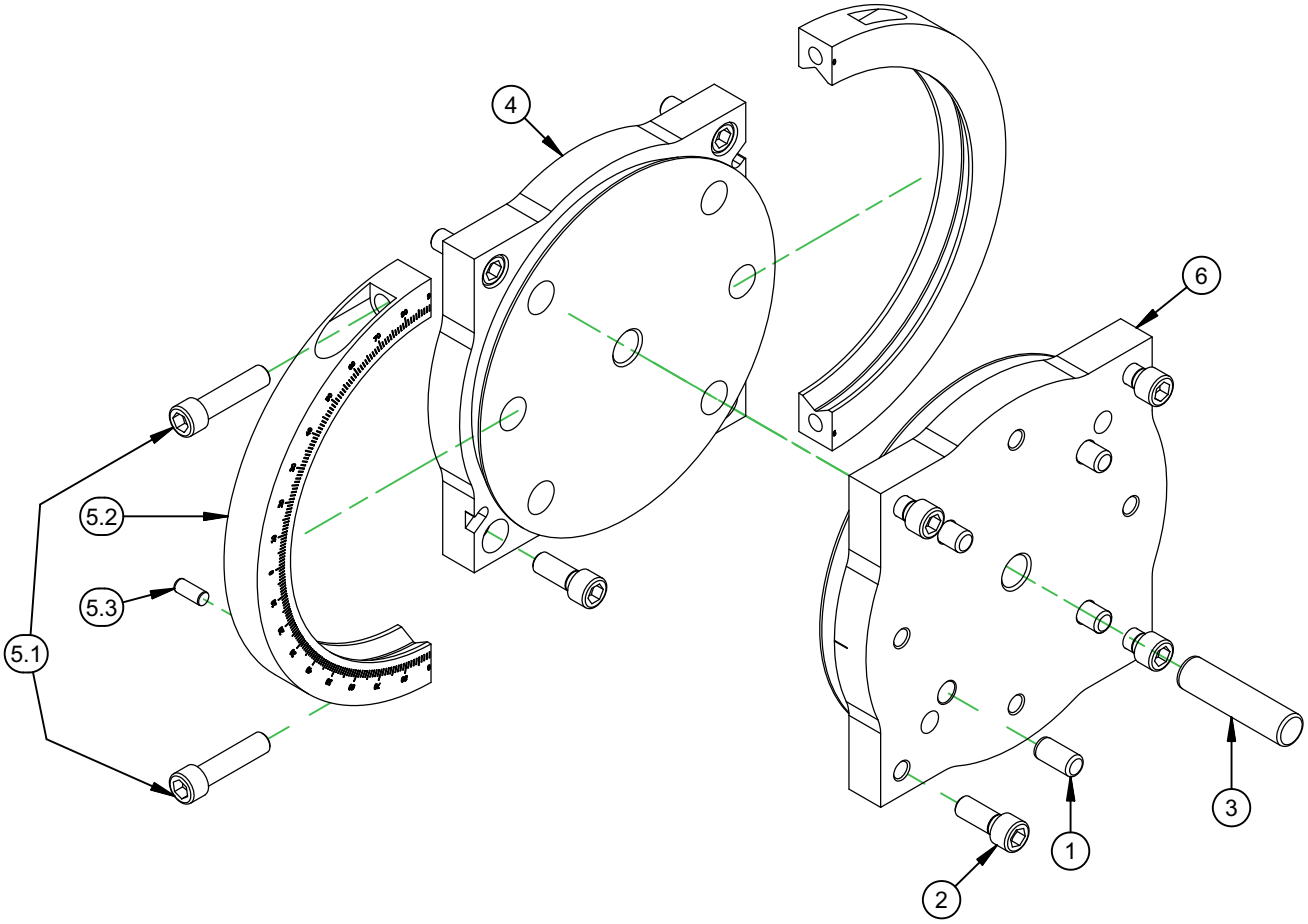

PARTS LIST			
ITEM	QTY	P/N:	DESCRIPTION
1	4	20398	PIN DOWEL 1/2 DIA X 1
2	8	40697	SCREW M12 X 1.75 X 30mm SHCS
3	1	46981	PIN DOWEL 3/4 DIA X 3
4	1	53624	PLATE SWIVEL MILLING HEAD RAM SIDE
5.1	2	64281	SCREW M12 X 1.75 X 50MM SHCS
5.2	1	74224	RING CLAMP SWIVEL PLATE MILLING HEAD METRIC
5.3	1	16540	PIN DOWEL 5/16 DIA X 3/4
6	1	74250	PLATE SWIVEL MILLING HEAD QUILL SIDE METRIC

FIGURE A-19. PLAQUE PIVOTANTE BLOC TÊTE DE FRAISAGE (P/N 63250)

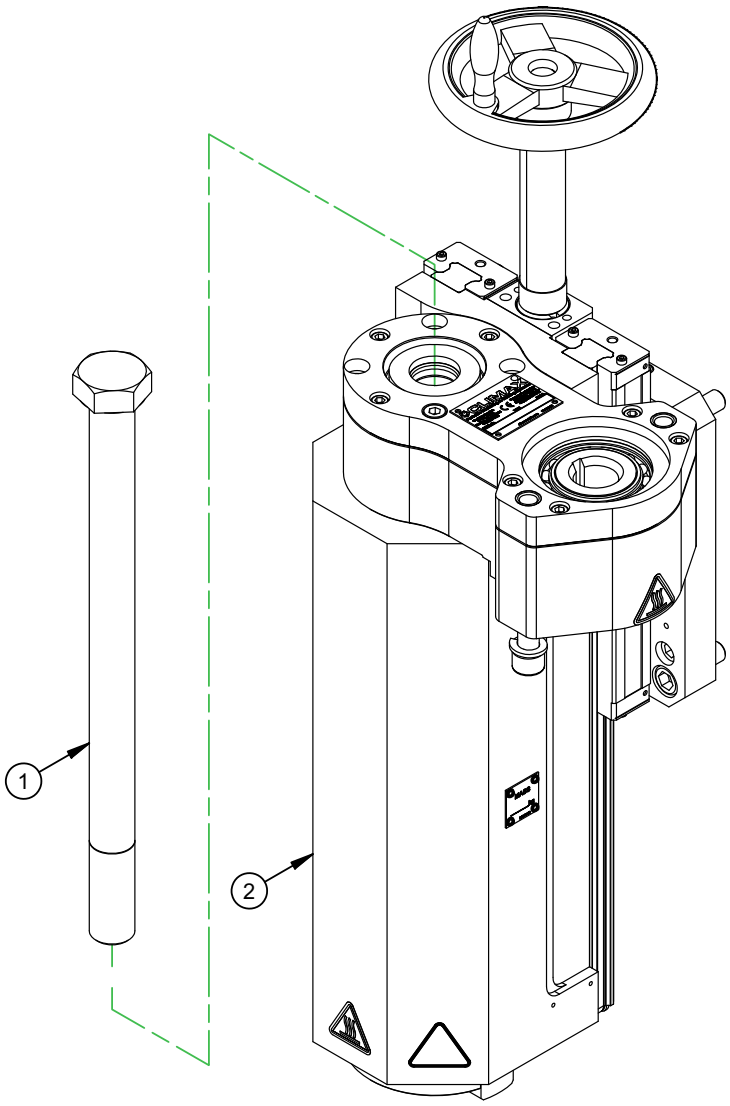

PARTS LIST			
ITEM	QTY	P/N:	DESCRIPTION
1	1	62330	DRAWBOLT 1"-8 X 14.5 (INCH NMTB)
		62331	DRAWBOLT M24X3 X 14.5 (METRIC NMTB)
		62845	DRAWBOLT 1"-8 X 15.5 (INCH V-FLANGE)
		62846	DRAWBOLT M24X3 X 15.5 (METRIC V-FLANGE)
2	1	72277	MILLING HEAD 2-29/32 BRG 8 STROKE #50 TAPER

COMPLETE ASSY (MILLING HEAD W/DRAWBOLT)	
P/N	CONFIGURATION
62282	MILLING HEAD 8 STROKE #50 TAPER INCH NMTB
62734	MILLING HEAD 8 STROKE #50 TAPER INCH V-FLANGE
62644	MILLING HEAD 8 STROKE #50 TAPER METRIC NMTB
62735	MILLING HEAD 8 STROKE #50 TAPER METRIC V-FLANGE

FIGURE A-20. TÊTE DE FRAISAGE ET ENSEMBLE BOULON DE FIXATION (P/N 73354)

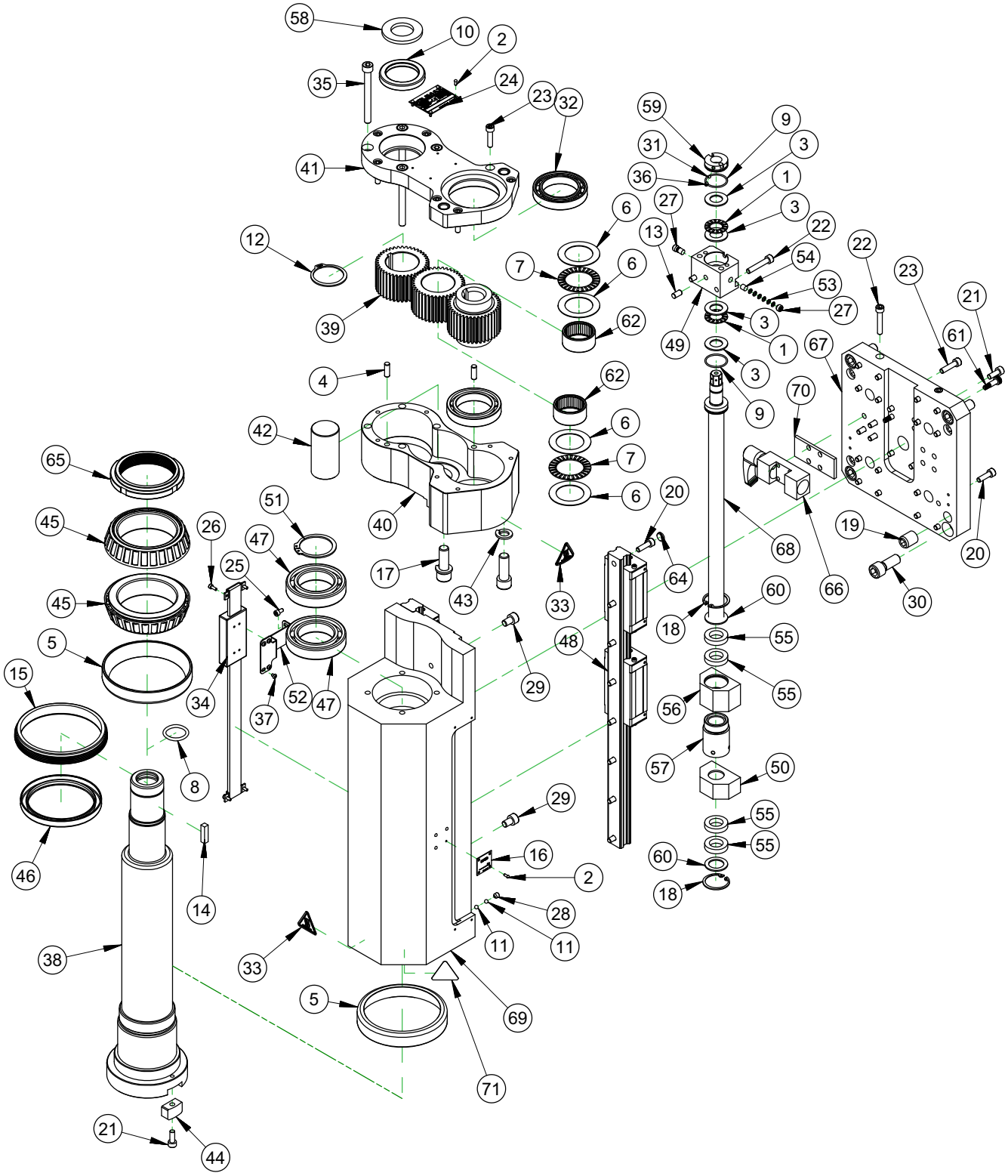

FIGURE A-21. TÊTE DE FRAISAGE 2-29/32 PAL. COURSE 8 CÔNE #50 (P/N 72277)

PARTS LIST			
ITEM	QTY	P/N:	DESCRIPTION
1	2	10538	BRG THRUST .625 ID X 1.125 OD X .0781
2	8	10588	SCREW DRIVE #2 x 1/4 HOLE SIZE .089
3	4	11165	WASHER THRUST .625 ID X 1.125 OD X .060
4	2	11729	PIN DOWEL 1/4 DIA X 3/4
5	2	11821	BRG CUP 4.4375 OD X .750 WIDE
6	4	15326	WASHER THRUST 1.375 ID X 2.062 OD X .030
7	2	15327	BRG THRUST 1-375 ID X 2.062 OD X .0781
8	1	15509	RING O 1/8 X 1 ID X 1-1/4 OD
9	2	15731	RING O 1/16 X 1 ID X 1-1/8 OD
10	1	15768	SEAL 1.625 ID X 2.250 OD X .313
11	4	16594	BALL NYLON 3/16 DIA
12	1	19505	RING SNAP 1-5/8 OD .062 WIDE
13	1	20166	PIN DOWEL 1/4 DIA X 1/2
14	1	20273	KEY 1/4 SQ X 1.00 SQ BOTH ENDS
15	1	28219	NUT MAIN BRG PRELOAD
16	1	29152	PLATE MASS CE
17	2	30207	SCREW M12 X 1.75 X 35mm SHCS
18	2	33777	RING SNAP 1-3/16 ID (30MM)
19	4	34643	SCREW M16 X 1.5 X 20mm SSSFP
20	32	35009	SCREW M6 X 1.0 X 20 SHCS
21	6	35014	SCREW M6 X 1.0 X 16mm SHCS
22	4	35504	SCREW M6 X 1.0 X 35mm SHCS
23	11	35652	SCREW M6 X 1.0 X 25 SHCS
24	1	35828	PLATE SERIAL YEAR MODEL CE 1.5 X 2.0
25	2	35910	SCREW M4 X 0.7 X 8MM SHCS
26	4	35994	SCREW M3 X 0.5 X 8mm SHCS
27	2	36087	SCREW M8 X 1.25 X 6MM SSSFP
28	2	36150	SCREW M6 X 1.0 X 6mm SSSCP
29	2	36545	SCREW M8 X 1.25 X 12mm
30	4	40697	SCREW M12 X 1.75 X 30mm SHCS
31	2	43489	BALL NYLON 1/8 DIA
32	2	46352	BRG BALL 1.7717 ID X 2.6772 OD X .4724 W/ 2 SEALS
33	2	46902	LABEL WARNING HOT SURFACE GRAPHIC 2.25 TRI
34	1	51859	SCALE DIGITAL 8 INCH VERTICAL MOUNT
35	4	52936	SCREW M8 X 1.25 X 80MM SHCS

FIGURE A-22. BLOC TÊTE DE FRAISAGE LISTE DE MATÉRIAUX PAGE 1 (P/N 72277)

PARTS LIST			
ITEM	QTY	P/N:	DESCRIPTION
36	2	53365	SCREW M4 X 0.7 X 4 mm SSSFP
37	4	54024	SCREW M3 X 0.5 X 4MM BHSCS
38	1	60462	SPINDLE BLOCK 2.75 BRG 8 STROKE #50 TAPER
39	1	60467	GEAR SET 40T 16DP 2.5PD THREE GEARS BLOCK SPINDLE 2.75 BRG
40	1	60468	HOUSING GEARBOX BLOCK SPINDLE 2.75 BRG
41	1	60469	COVER GEARBOX BLOCK SPINDLE 2.75 BRG
42	1	60470	SHAFT GEAR BLOCK SPINDLE 2.75 BRG
43	2	60702	WASHER SPLIT LOCK M12
44	2	60704	LUG DRIVE #50 TAPER BLOCK SPINDLE
45	2	60705	BRG CONE 2.75 ID X 1.00 WIDE
46	1	60706	SEAL 3.25 ID X 4.000 OD X .375
47	2	60793	BRG BALL 1.7717 ID X 2.9528 OD X .6299
48	2	62255	SLIDE RAIL THK SHS25 442MM LG PRELOADED METAL SCRAPERS 2 BLOCKS
49	1	62281	BEARING BLOCK BALLSCREW 20MM
50	1	62321	HOLDER FELT WIPER MILLING HEAD
51	1	62322	RING SNAP 1.771 OD (45MM)
52	1	62324	BRACKET DRO BLOCK SPINDLE 2.75 BRG
53	12	62376	WASHER SPRING BELLEVILLE 1/8 ID X 1/4 OD X .013 THK
54	2	62378	ROD POLYURETHANE 1/4 DIA X 1/4 LENGTH 95 SHORE A
55	4	62379	SEAL FELT 16MM BALL SCREW 1.015 OD MILLING HEAD
56	1	62423	MOUNT BALL NUT MILLING HEAD
57	1	62426	BALL SCREW NUT 20MM X 5MM LEAD 33 MM OD EICHENBERGER ROUND
58	1	62696	WASHER 1 FLTW ASTM F436
59	1	62898	BRG RETAINING NUT 5/8-18 O-RING SEAL SETSCREW LOCK
60	2	62903	WASHER SHIM .75 ID 1.125 OD .062 THICK STEEL
61	2	62909	SCREW 6MM DIA X 12MM X M5 X 0.8 SHLDCS
62	2	63437	BRG NEEDLE 1-3/8 ID X 1-5/8 OD X .750 OPEN
63	1	63927	HANDWHEEL ASSY Z-AXIS (NOT SHOWN)
64	16	68501	CAP RAIL 25MM METAL THK SHS
65	1	68623	NUT LOCKING MODIFIED 2.751-18 FLEXIBLE INSERT LOCKING
66	1	72262	ZIMMER BRAKE 25mm RAIL
67	1	72279	PLATE MOUNTING BLOCK SPINDLE 2.75 BRG
68	1	72283	BALL SCREW MILLING HEAD 2.75 BRG 8" STROKE
69	1	72652	HOUSING SPINDLE 2.9062 BRG 8 STROKE
70	1	72869	ADAPTER BRAKE 25mm RAIL 4mm THICK
71	1	80510	LABEL WARNING CUTTING OF FINGERS/ROTATING BLADE

FIGURE A-23. BLOC TÊTE DE FRAISAGE LISTE DE MATÉRIAUX PAGE 2 (P/N 72277)

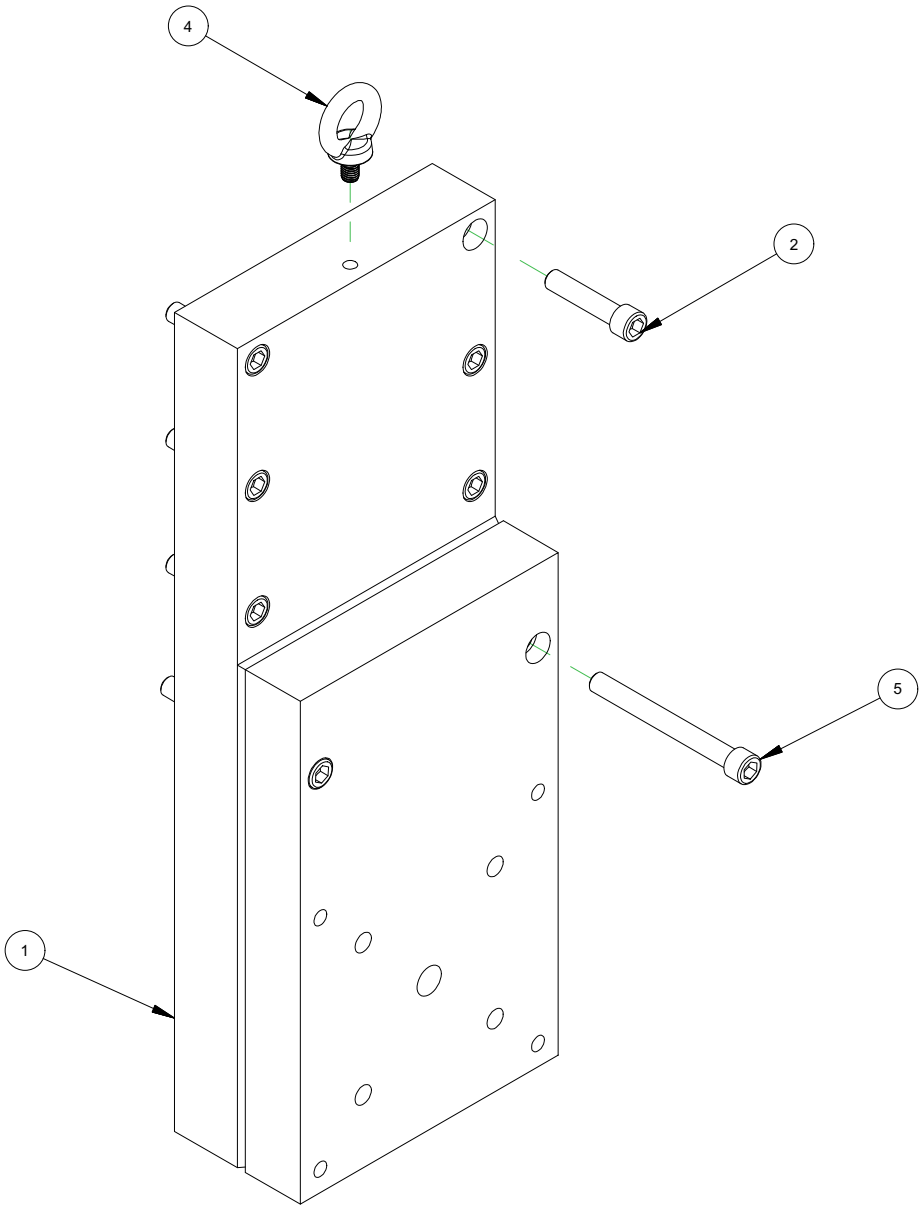

5	2	61164	SCREW M12 X 1.75 X 110 MM SHCS
4	1	59625	BOLT EYE M10 X 1.5 X 17MM LG
2	6	46078	SCREW M12 X 1.75 X 55 SHCS
1	1	65839	EXTENSION MILLING HEAD
ITEM	QTY	PART No.	DESCRIPTION
PARTS LIST			

FIGURE A-24. EXTENSION BLOC TÊTE DE FRAISAGE (P/N 65840)

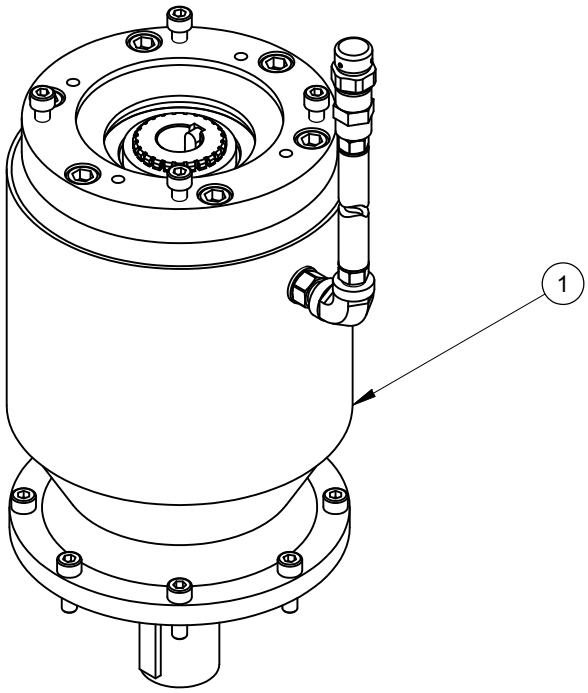

PARTS LIST			
ITEM	QTY	P/N:	DESCRIPTION
1	1	62032	ASSY SERVO DRIVE GEARBOX CM6200

FIGURE A-25. BLOC SERVOMOTEUR (P/N 83156)

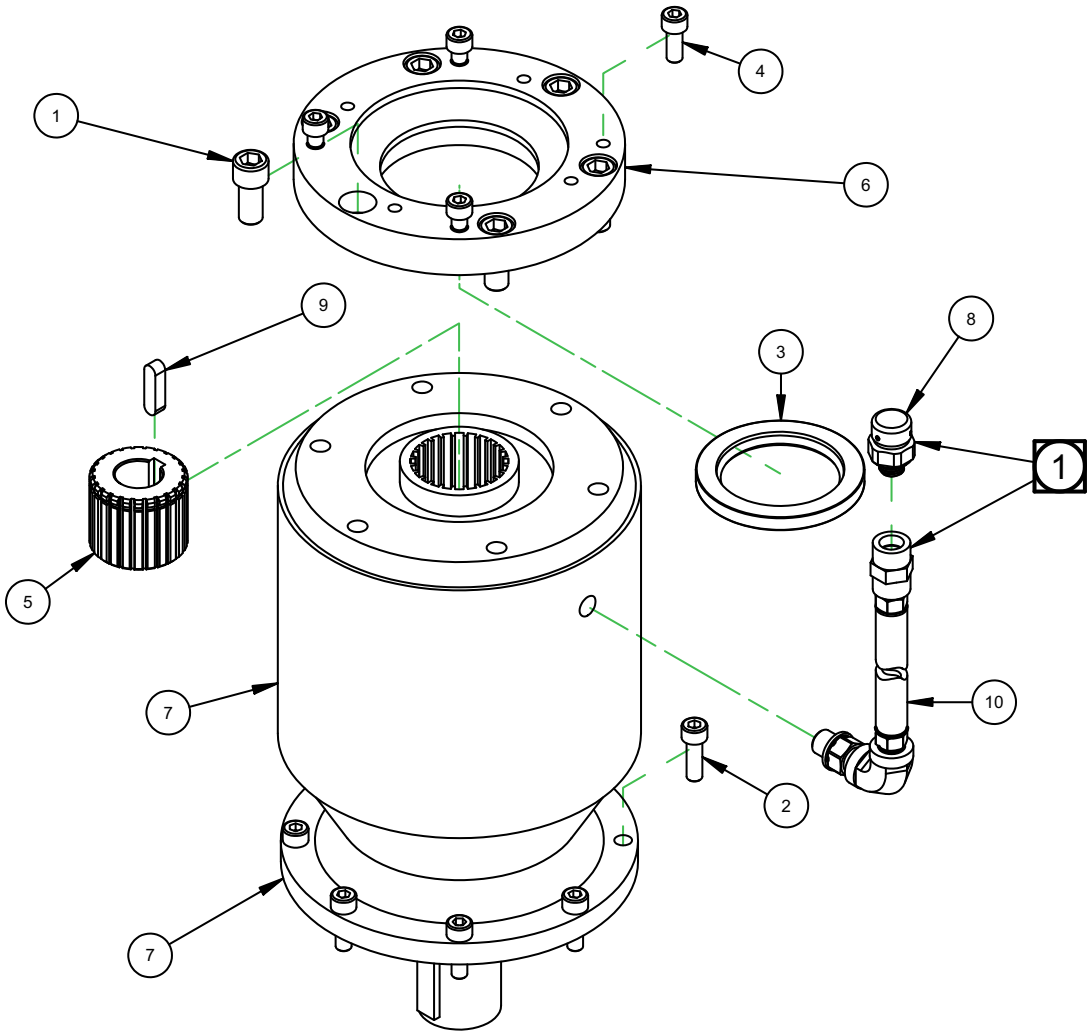

NOTE:

1 REMOVE BREATHER SUPPLIED WITH GEARBOX, INSTALL VENT LINE ASSY 69351, AND ASSEMBLE TO END FITTING

PARTS LIST			
ITEM	QTY	P/N:	DESCRIPTION
1	6	42094	SCREW M12 X 1.75 X 25mm SHCS
2	8	42494	SCREW M8 X 1.25 X 25mm SHCS
3	1	44964	SEAL OIL 60 x 85 x 8 DOUBLE LIP
4	4	50458	SCREW M8 X 1.25 X 20mm SHCS
5	1	51928	SPLINE COUPLING BREVINI
6	1	51930	FLANGE ADAPTER 110mm PILOT SPECIAL DRILLING
7	1	63731	REDUCER 162.8:1 PLANETARY
8	1	-	FACTORY SUPPLIED BREATHER
9	1	68823	KEY 8mm X 7mm X 30mm RADIUS BOTH ENDS
10	1	69351	ASSY GEARBOX VENT LINE

FIGURE A-26. BLOC SERVOMOTEUR (P/N 62032)

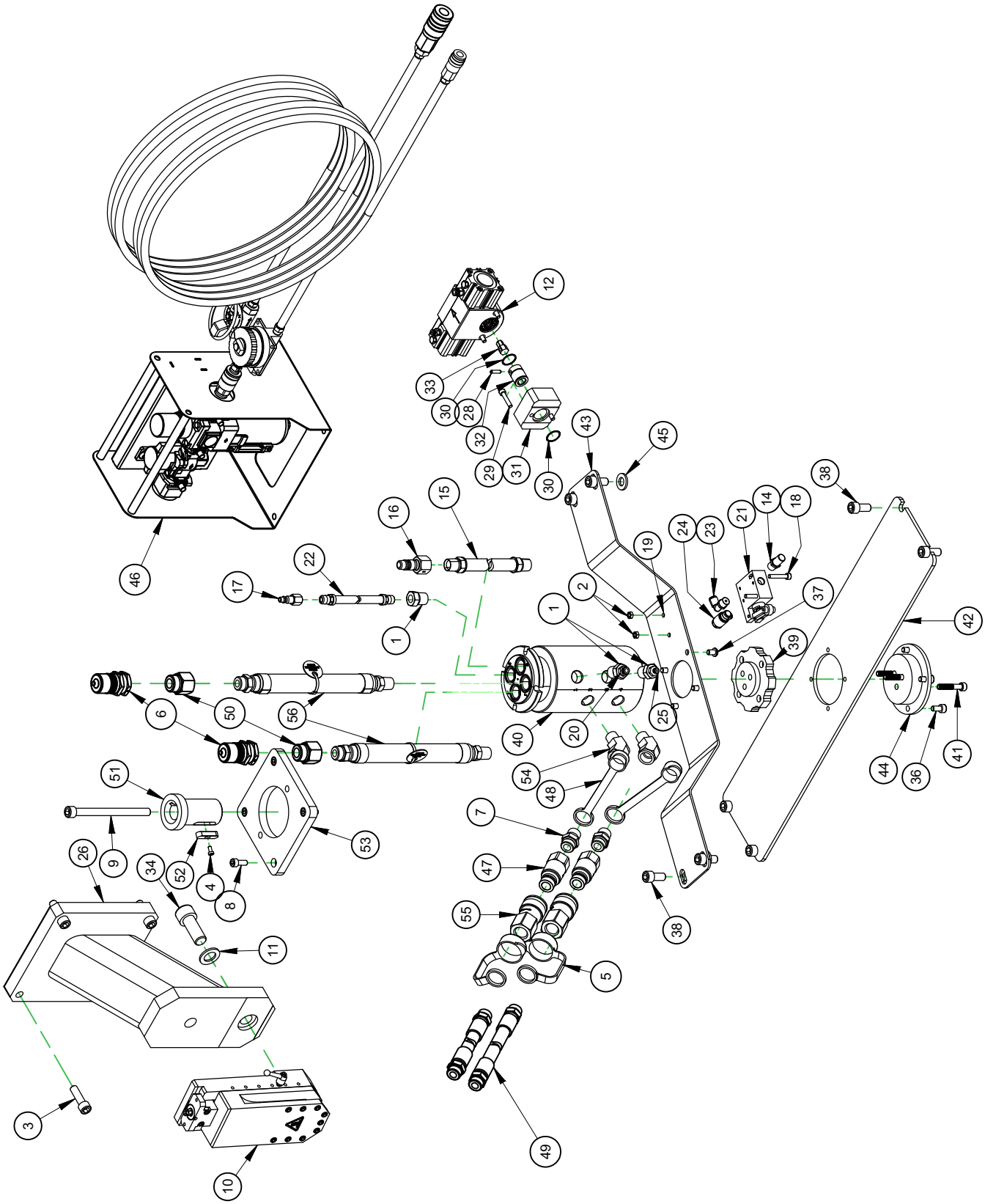

FIGURE A-27. BLOC À POINTE UNIQUE (P/N 83100)

PARTS LIST			
ITEM	QTY	P/N:	DESCRIPTION
1	3	12920	FTG REDUCER BUSHING 1/2 NPTM X 1/4 NPTF STEEL
2	2	20772	NUT M6 X 1.0 STDN ZINC PLATED
3	4	35215	SCREW M12 X 1.75 X 40mm SHCS
4	1	35916	SCREW M5 X 0.8 X 10MM SHCS
5	2	39241	DUST CAP 1/2 COUPLER 1SO 16028
6	2	40612	FTG QD NIPPLE 3/4B X SAE-12F
7	2	46944	FTG ADAPTER 1/2 NPTF MALE X 7/8-14 W/ O-RING
8	4	50458	SCREW M8 X 1.25 X 20mm SHCS
9	1	50907	SCREW M12 X 1.75 X 150mm SHCS
10	1	57781	TOOL HEAD ASSY FF LINE
11	1	57888	WASHER FIXTURING 21MM ID X 35MM OD X 3MM CASE HARDENED
12	1	58671	FEED BOX PNEUMATIC REMOTE FEED ADJUST
13	1	59244	PLUMBING PNEUMATIC FEED ASSY
14	1	13641	FTG MUFFLER 1/4 NPTM
15	1	15625	HOSE ASSY 801 1/2 X 1/2 NPTMS ENDS X 12
16	1	24851	FTG QUICK COUPLER 1/2B 1/2 NPTF MALE AIR
17	1	28493	QUICK COUPLER 1/4B MALE 1/4 NPTF
18	2	35504	SCREW M6 X 1.0 X 35mm SHCS
19	2	35891	WASHER M6 FLTW DIN 125
20	1	51263	FTG ADAPTER 1/4 NPTM X 1/4 TUBE F PRESTOLOCK NICKEL PLATED
21	1	59318	VALVE 2-POSITION 3-WAY NORMALLY OPEN
22	1	59341	HOSE ASSY 801 1/4 X 1/4 NPTM ENDS X 12
23	1	59342	FTG ELBOW 1/4 NPTMS X 1/4 TUBE F PRESTOLOCK NICKEL PLATED
24	1	60669	VALVE 1/4 NPTM X 1/4 TUBE F PRESTOLOCK FLOW CONTROL RIGHT ANGLE METERED AT 5 SCFM
25	1	63083	FTG ADAPTER 1/8 TUBE F PRESTOLOCK X 1/4 NPTM STRAIGHT
26	1	62984	ADAPTER SINGLE POINT TOOL HEAD TO MILLING ARM
27	1	62994	ASSY ADAPTER FEEDBOX CM6200
28	1	10850	PIN ROLL 3/16 DIA X 3/4
29	2	35505	SCREW M6 X 1.0 X 30 SHCS
30	2	39074	RING SNAP 7/8 OD SPIRAL MED DUTY
31	1	62985	PLATE FEEDBOX ADAPTER CM6200
32	1	62986	SHAFT FEEDBOX ADAPTER INNER CM6200
33	1	62988	SHAFT FEEDBOX ADAPTER OUTER CM6200
34	1	63018	SCREW M20 X 1.5 X 50MM SHCS
35	1	63121	ASSY ROTARY UNION CM6200
36	4	13787	SCREW M8 X 1.25 X 16mm
37	4	21769	5/16-18 X 1/2 BHSCS
38	8	42094	SCREW M12 X 1.75 X 25mm SHCS
39	1	58039	CAM FEED
40	1	58751	UNION ROTARY HYDRAULIC 4 CHANNEL 1/2 NPTF PORTS MOD
41	3	59349	SCREW M8 X 1.25 X 45MM SHCS
42	1	62891	MOUNT ROTARY UNION CM6200
43	1	62893	RESTRAINT TORQUE ROTARY UNION CM6200
44	1	62894	SPACER ROTARY UNION CM6200
45	4	62978	WASHER M12 FLTW 27MM OD 3.1 MM THICK
46	1	63156	AIR CONTROL ASSY FOR PNEUMATIC FEED 50 FT
47	2	63427	FTG QD NIPPLE 1/2B ISO 16028 STYLE X SAE-10F
48	2	63428	DUST CAP QD NIPPLE 1/2B ISO 16028 STYLE RUBBER
49	2	63675	HOSE ASSY 451 1/2 X SAE-10M X 36 STRAIGHT FITTINGS CE
50	2	63682	FTG ADAPTER SAE-12M X SAE-10F
51	1	63774	ADAPTER SINGLE POINT DRIVE SHAFT
52	1	63782	KEY 8MM X 12MM X 40MM RADIUS BOTH ENDS WITH CB HOLE
53	1	63784	PLATE ADAPTER HYD MOTOR TO DRIVE ASSY
54	2	64901	FTG ELBOW 1/2 NPTM X 1/2 NPTF ST 45 DEG
55	2	69486	FTG QD COUPLER 1/2B ISO 16028 X SAE-10F
56	2	83120	HOSE ASSY 1/2" 451TC X SAE-10 TO 1/2 NPTM X 12 INCHES CE

FIGURE A-28. LISTE DE PIÈCES BLOC À POINTE UNIQUE (P/N 83100)

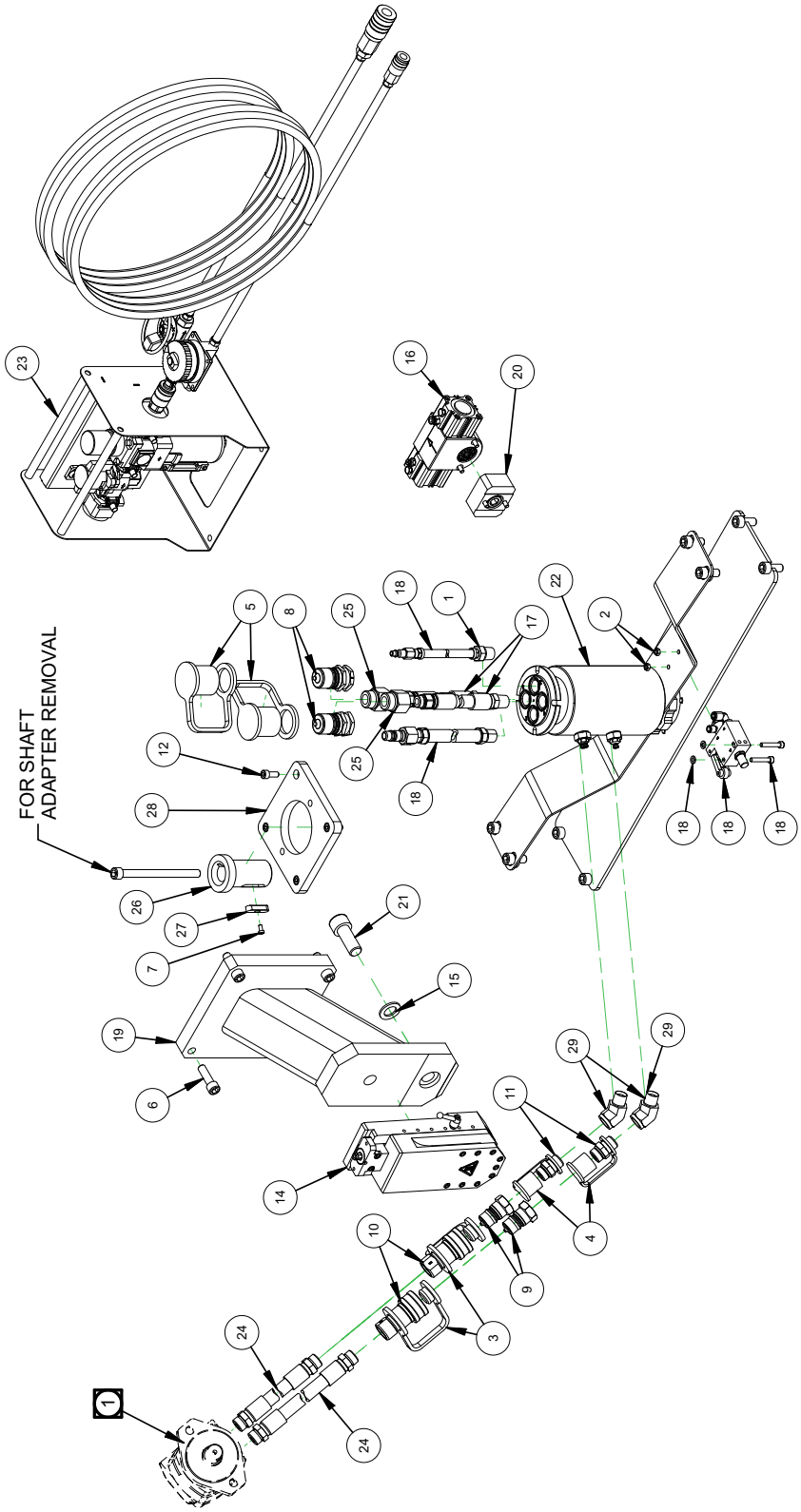

FIGURE A-29. ASSEMBLAGE EN UN SEUL POINT (P/N 62037)

PARTS LIST			
ITEM	QTY	PART No.	DESCRIPTION
1	3	12920	FTG REDUCER BUSHING 1/2 NPTM X 1/4 NPTF STEEL
2	2	20772	NUT M6 X 1.0 STDN ZINC PLATED
3	2	27977	FTG DUST PLUG 1/2 QD COUPLER
4	2	27978	FTG DUST CAP 1/2 MALE QUICK COUPLING
5	2	29561	FTG DUST CUP 60 SERIES 3/4 MALE QUICK CONNECT
6	4	35215	SCREW M12 X 1.75 X 40mm SHCS
7	1	35916	SCREW M5 X 0.8 X 10MM SHCS
8	2	40612	FTG QD NIPPLE 3/4B X SAE-12F
9	2	40614	FTG QUICK COUPLER MALE 1/2B X SAE-10F
10	2	40615	FTG QUICK COUPLER FEMALE 60 SERIES 1/2B X SAE-10F
11	2	46944	FTG ADAPTER 1/2 NPTF MALE X 7/8-14 W/ O-RING
12	4	50458	SCREW M8 X 1.25 X 20mm SHCS
13	1	50907	SCREW M12 X 1.75 X 150mm SHCS
14	1	57781	TOOL HEAD ASSY FF LINE
15	1	57888	WASHER FIXTURING 21MM ID X 35MM OD X 3MM CASE HARDENED
16	1	58671	FEED BOX PNEUMATIC REMOTE FEED ADJUST
17	2	59240	HOSE ASSY 451 1/2 X SAE-10M TO 1/2 NPTM X 12 STRAIGHT FITTINGS
18	1	59244	PLUMBING PNEUMATIC FEED ASSY
19	1	62984	ADAPTER SINGLE POINT TOOL HEAD TO MILLING ARM
20	1	62994	ASSY ADAPTER FEEDBOX CM6200
21	1	63018	SCREW M20 X 1.5 X 50MM SHCS
22	1	63121	ASSY ROTARY UNION CM6200
23	1	63156	AIR CONTROL ASSY FOR PNEUMATIC FEED 50 FT
24	2	63675	HOSE ASSY 451 1/2 X SAE-10M X 36 STRAIGHT FITTINGS CE
25	2	63682	FTG ADAPTER SAE-12M X SAE-10F
26	1	63774	ADAPTER SINGLE POINT DRIVE SHAFT
27	1	63782	KEY 8MM X 12MM X 40MM RADIUS BOTH ENDS WITH CB HOLE
28	1	63784	PLATE ADAPTER HYD MOTOR TO DRIVE ASSY
29	2	64901	FTG ELBOW 1/2 NPTM X 1/2 NPTF ST 45 DEG

FIGURE A-30. LISTE DES PIÈCES D'ASSEMBLAGE À POINT UNIQUE (P/N 62037)

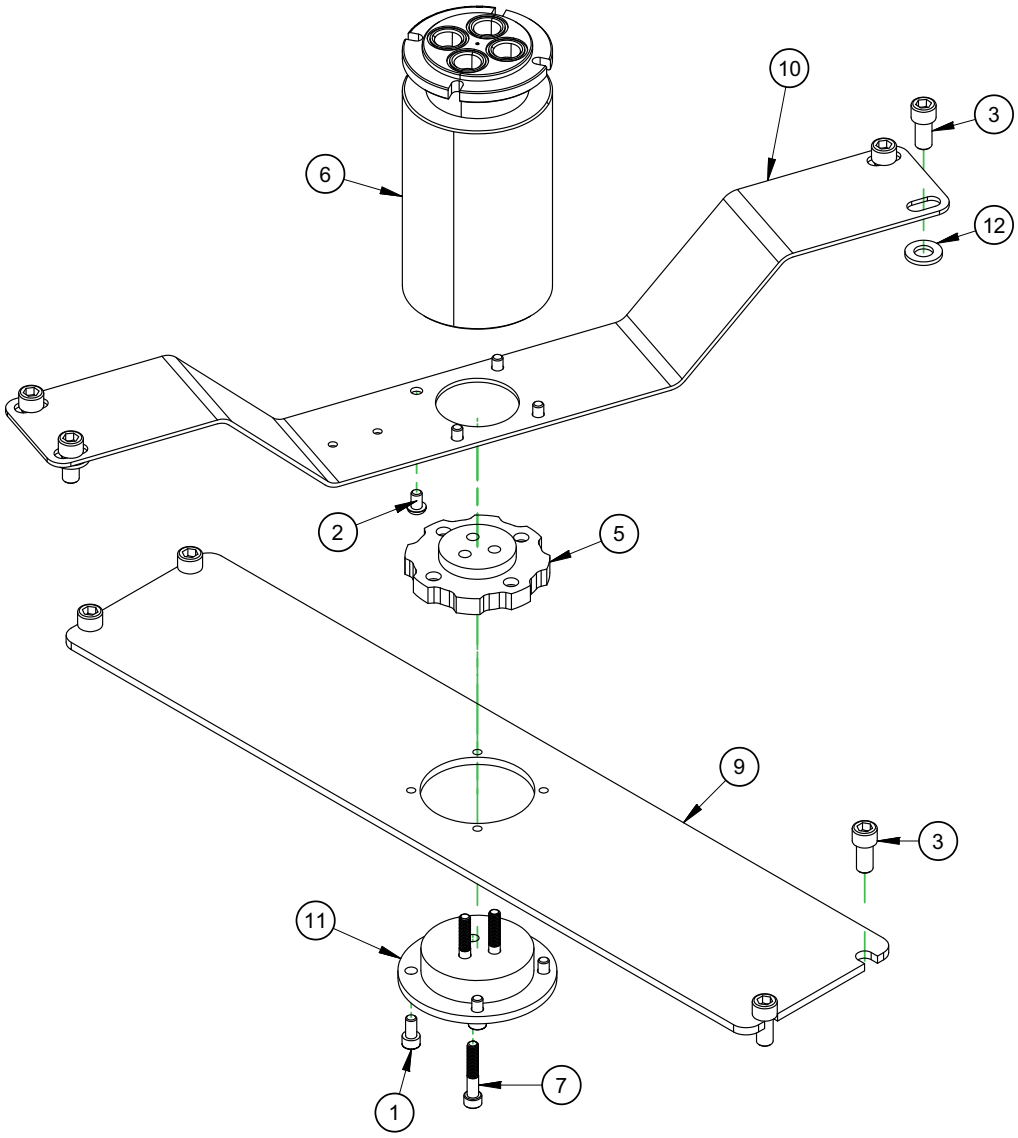

PARTS LIST			
ITEM	QTY	P/N:	DESCRIPTION
1	4	13787	SCREW M8 X 1.25 X 16mm
2	4	21769	5/16-18 X 1/2 BHSCS
3	8	42094	SCREW M12 X 1.75 X 25mm SHCS
4	3	42494	(NOT SHOWN FOR OD CONFIG ONLY) SCREW M8 X 1.25 X 25MM SHCS
5	1	58039	CAM FEED
6	1	58751	UNION ROTARY HYDRAULIC 4 CHANNEL 1/2 NPTF PORTS MOD
7	3	59349	SCREW M8 X 1.25 X 45MM SHCS
8	4	60837	(NOT SHOWN FOR OD CONFIG ONLY) SCREW M8 X 1.25 X 16MM HHCS
9	1	62891	MOUNT ROTARY UNION CM6200
10	1	62893	RESTRAINT TORQUE ROTARY UNION CM6200
11	1	62894	SPACER ROTARY UNION CM6200
12	4	62978	WASHER M12 FLTW 27MM OD 3.1 MM THICK

FIGURE A-31. ASSEMBLAGE DU JOINT TOURNANT (P/N 63121)

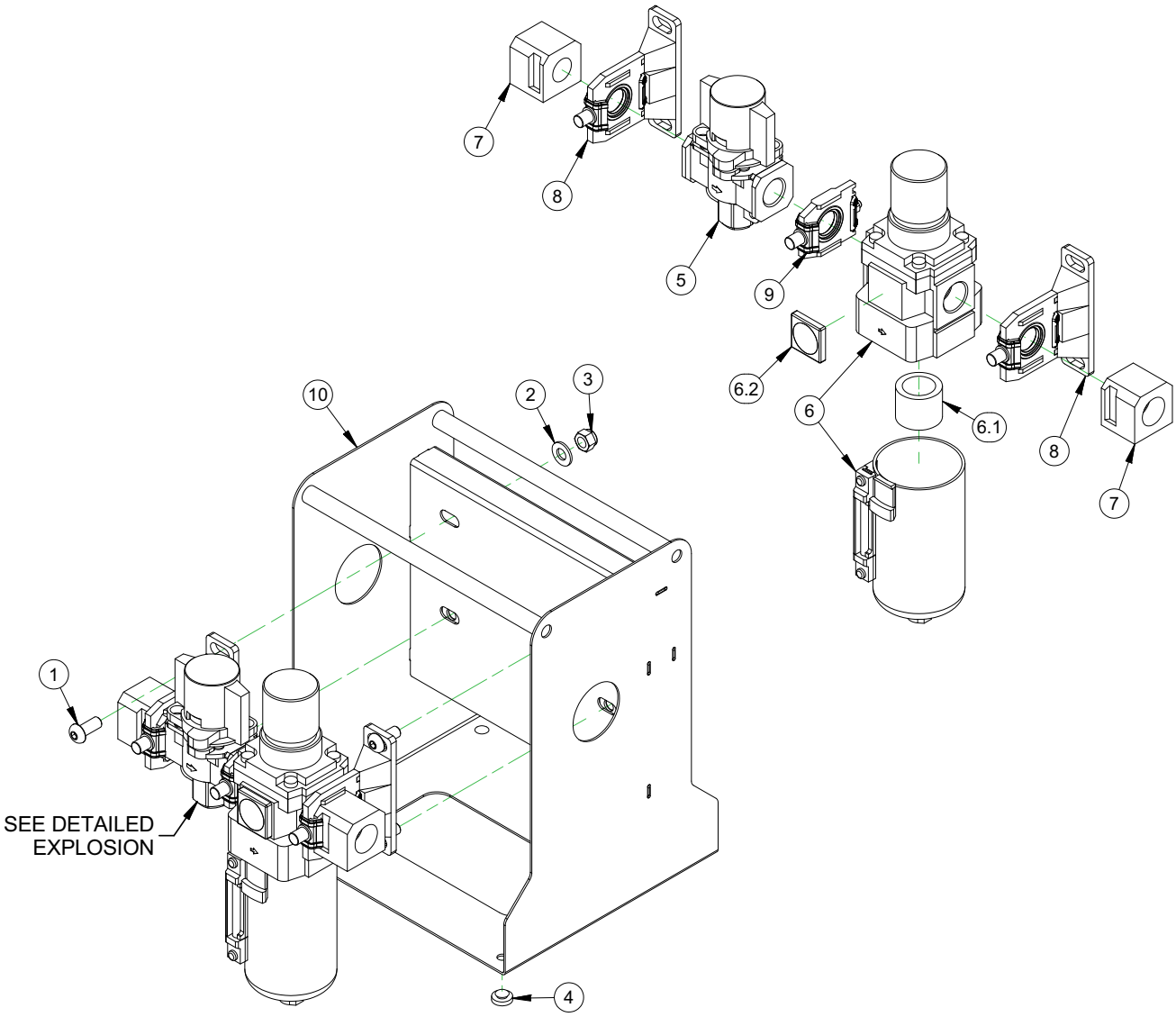

PARTS LIST					
ITEM	QTY	P/N:	DESCRIPTION	MANUFACTURER	MFG P/N
1	4	14771	5/16-18 X 3/4 BHSCS	N/A	N/A
2	4	13489	WASHER 5/16 FLTW SAE	N/A	N/A
3	4	19729	NUT 5/16-18 NYLON INSERT LOCKNUT	N/A	N/A
4	4	83462	RUBBER BUMPER, 9/16 DIA X 1/8 TALL	N/A	N/A
5	1	96732	SP VALVE ISOLATION/SHUTOFF WITH 1/2 INCH PORTS	SMC	VHS40-N04B-S-Z
6	1	96733	SP REGULATOR & FILTER W/ GAGE & SIGHT GLASS 7-125 PSI 1/2 PORTS	SMC	AW40-N04-8Z-B
6.1	1	96735	SP FILTER PNEUMATIC	SMC	AF40P-060S
6.2	1	97635	SP INDICATOR PRESSURE 1 MPA FOR SMC FRL	SMC	GC3-10AS-X2103
7	2	N/A	ADAPTER PIPE 1/2 INCH NPT FOR SMC SIZE 40 FRL	SMC	E400-N04-A
8	2	N/A	SPACER WITH BRACKET FOR SMC SIZE 40 FRL	SMC	Y400T-A
9	1	N/A	SPACER FOR SMC SIZE 40 FRL	SMC	Y400-A
10	1	97739	SHEET METAL FRAME FOR SMC PCU 1/2 INCH PORTS	N/A	N/A

FIGURE A-32. ASSEMBLAGE DE L'UNITÉ DE CONDITIONNEMENT PNEUMATIQUE (P/N 97742)

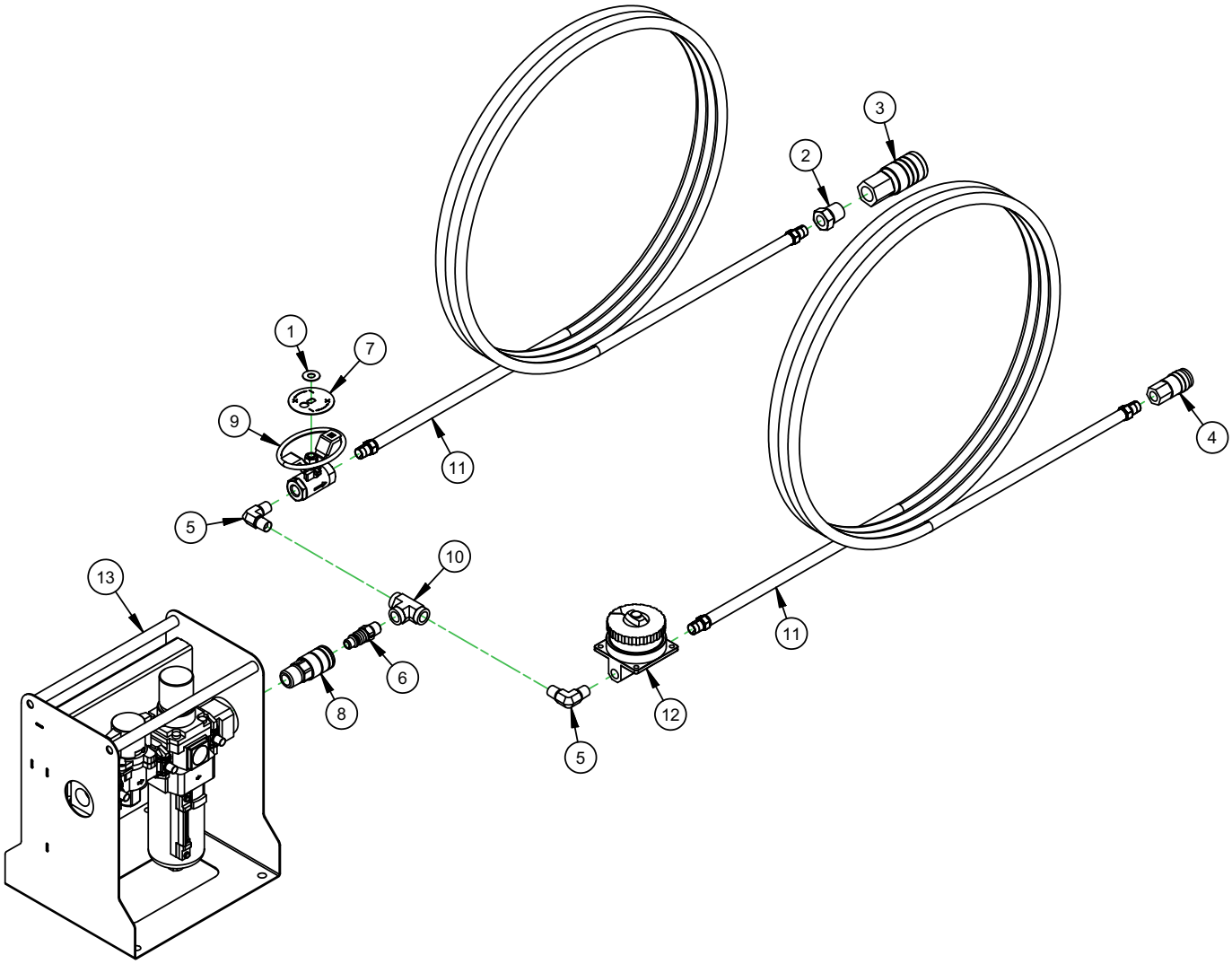

PARTS LIST			
ITEM	QTY	PART No.	DESCRIPTION
1	1	10770	WASHER THRUST .75 OD X .312 ID X .03
2	1	12920	FTG REDUCER BUSHING 1/2 NPTM X 1/4 NPTF STEEL
3	1	13208	FTG QUICK COUPLER 1/2B 1/2NPTF FEMALE AIR
4	1	28494	FTG QUICK COUPLER 1/4B 1/4 NPTF FEMALE AIR
5	2	30502	FTG ELBOW 1/4 NPTM X 1/4 NPTM 90 DEG
6	1	30936	FTG QUICK COUPLER 3/8B 1/4 NPTM MALE AIR
7	1	35772	LABEL DIRECTION OVAL HANDLE BALL VALVE
8	1	55126	FTG QUICK COUPLER 3/8B 1/2 NPTM FEMALE AIR
9	1	59203	VALVE BALL 1/4 NPTF X 1/4 NPTF VENTED OVAL HANDLE
10	1	59695	FTG TEE 1/4 NPTF (3)
11	2	63155	HOSE ASSY 801 1/4 X 1/4 NPTMS ENDS X 600
12	1	71317	REGULATOR PNUE. 2-40 PSI DIAL SET SEMI-PRECISION 1/4 NPTF X 1/4 NPTF
13	1	97742	ASSY PNEUMATIC FILTER & VALVE WITH STAND

FIGURE A-33. ENSEMBLE DE LA COMMANDE D'AIR DE L'AVANCE PNEUMATIQUE (P/N 63156)

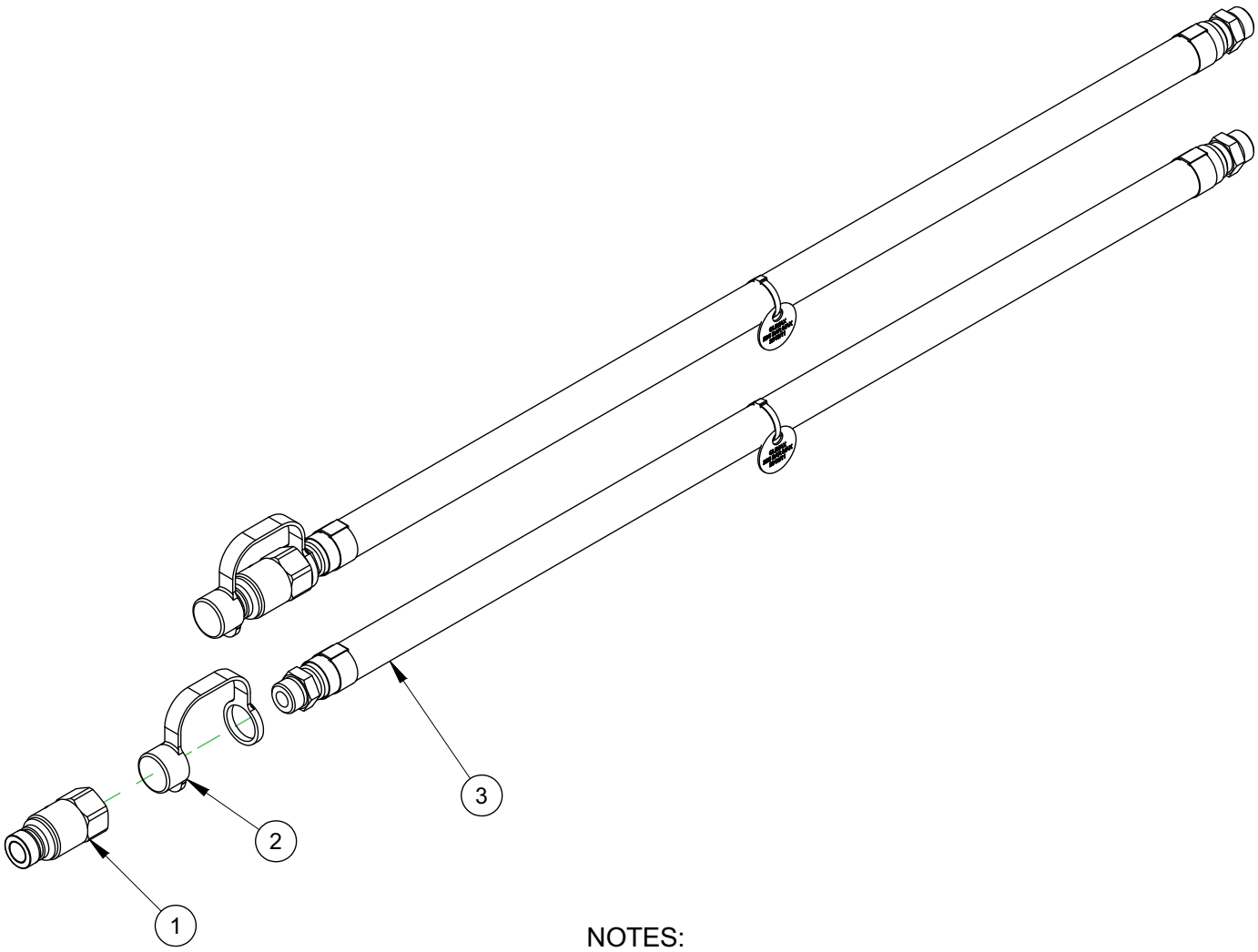

NOTES:

1. HOSES WILL ATTACH TO HYDRAULIC MOTOR.
2. QUICK COUPLERS AND DUST CAPS WILL ATTACH TO HOSES ON ROTARY UNION.

PARTS LIST			
ITEM	QTY	P/N:	DESCRIPTION
1	2	63427	FTG QD NIPPLE 1/2B ISO 16028 STYLE X SAE-10F
2	2	63428	DUST CAP QD NIPPLE 1/2B ISO 16028 STYLE RUBBER
3	2	83181	HOSE ASSY 451 1/2 X SAE-10M X 36 STRAIGHT FITTINGS CE

FIGURE A-34. BLOC ENTRAÎNEMENT HYDRAULIQUE POINTE UNIQUE (P/N 83186)

TABLEAU A-1. SPARE PARTS

Quantité	Numéro d'article	Description
4	62606	ANNEAU DE LEVAGE M24 X 3 X 38 MM 70 DI X 130 DE 225 OAL 9250 LBS 4200 KG PIVOTANT
64	58202	VIS 16 MM DIAM X 20 MM X M12 X 175 SHLDCS
Tour à tuyaux / protecteur d'encodeur		
1	62616	TOUR TUYAU CM6200
2	57874	VIS M8 X 125 X 60 MM SHCS
1	62615	PROTECTEUR ENCODEUR CM6200
Colliers de bras pivotant		
3	62601	ENS. COLLIER BRAS CM6200
1	62602	ENS. COLLIER BRAS SÉCURITÉ
8	46222	VIS M16 X 20 X 45 MM SHCS
Freins de ralentissement		
16	27172	RONDELLE ÉLASTIQUE BELLEVILLE 5/8 X 1-1/4 X 040
4	11693	RONDELLE 5/8 FLTW SAE
4	62612	TIGE FILETÉE M16 X 2 X 100 MM FILET COMPLET
8	62613	ÉCROU M16 X 20 JAMN
2	46232	BARRE COLLIER FREIN
2	54165	PATIN FREIN 16M FRAISEUSE CIRCULAIRE
Fraisage		
2	62255	GUIDE THK SHS25 442 MM LG PRÉCHARGÉE RACLEURS MÉTAL 2 BLOCS
1	62426	ÉCROU VIS BILLES 20 MM X 5 MM VIS MÈRE 33 MM DE EICHENBERGER ROND
1	62431	VIS BILLES TÊTE FRAISEUSE 275 BRG COURSE 8"
1	62719	OUTIL 1" ARBRE CANNELÉ OPÉRATEUR MANUEL
1	51859	ÉCHELLE NUMÉRIQUE 8 PO MONTAGE VERTICALE
1	62645	DOUILLE DE CLÉ 38 MM EMBOUT 12 PT 1/2
1	53459	ENS. MOTEUR HYD 80 CU IN 2000 SERIE W/ 12" QD MÂLE
1	53458	ENS. MOTEUR HYD 96 CU IN 2000 SERIE W/ 12" QD MÂLE
1	46950	ENS. MOTEUR HYD 119 CU IN 2000 SERIE W/ 12" QD MÂLE
1	46375	ENS. MOTEUR HYD 149 CU IN 2000 SERIE W/ 12" QD MÂLE
1	46549	ENS. MOTEUR HYD 187 CU IN 2000 SERIE W/ 12" QD MÂLE
1	46550	ENS. MOTEUR HYD 140 CU IN 2000 SERIE W/ 12" QD MÂLE

TABLEAU A-1. SPARE PARTS

Quantité	Numéro d'article	Description
1	47383	FRAISEUSE SURF. ENS. 4 DIAM CÔNE #50 AVEC EMBOUTS
1	47384	FRAISEUSE SURF. ENS. 5 DIAM CÔNE #50 AVEC EMBOUTS
1	47385	FRAISEUSE SURF. ENS. 6 DIAM CÔNE #50 AVEC EMBOUTS
1	47386	FRAISEUSE SURF. ENS. 8 DIAM CÔNE #50 AVEC EMBOUTS
1	56175	FRAISEUSE SURF. ENS. 10 DIAM CÔNE #50 AVEC EMBOUTS
1	47229	EMBOUT CARBURE CARRÉ 528 IC SEMT13T3AGSN-JM
Single Point		
3	12920	FTG BAGUE RÉDUCTEUR 1/2 NPTM X 1/4 ACIER NPTF
2	27977	FTG BOUCHON POUSSIÈRE 1/2 FEMELLE RACCORD RAPIDE
2	27978	FTG CAPUCHON POUSSIÈRE 1/2 MÂLE RACCORD RAPIDE
2	40614	FTG RACCORD RAPIDE MÂLE 60 SERIE 1/2B X SAE-10F
2	40615	FTG RACCORD RAPIDE FEMELLE 60 SERIE 1/2B X SAE-10F
2	46944	FTG ADAPTER 1/2 NPTF MALE X SAE-10M
1	29066	FORET HSS 3/4 X 50 LH FINISH SINGLE SC
1	29067	FORET HSS 3/4 X 50 RH FINISH SINGLE SC
1	46252	DOUILLE DE CLÉ HEXA 38 MM EMBOUT 17 MM 1/2
1	57794	ENS. BOUTON MODIFIÉ
2	59240	ENS. TUYAU 451 1/2 X SAE-10 TO 1/2 NPTM X 12 RACCORDS DROITS
1	60033	PORTE-PLAQUETTE 3/4 TIGE CARRÉE GAUCHE AV. 10 PLAQUETTES SECO TRI-GON
1	60034	PORTE-PLAQUETTE 3/4 TIGE CARRÉE DROITE AV. 10 PLAQUETTES SECO TRI-GON
1	63121	ENS. RACCORD ROTATIF CM6200
Système d'avance axiale à pointe unique		
1	58671	MODULE AVANCE PNEUM. RÉGLAGE AVANCE DISTANCE
130	50985	TUBE 1/4 DE X 0,040 TROU PAROI 1200 PSI NYLON BLEU
130	59151	TUBE 1/8 DE X 0,023 TROU PAROI 1000 PSI NYLON BLEU
1	59318	VANNE 2 POSITIONS 3 VOIES NO
1	58519	TIGE AVANCE DÉMONTABLE MODULE AVANCE
2	58446	CYLINDRE PNEUM. 40 MM DIAM COURSE 10 MM SIMPLE ACTION RES- SORT EXT. POUCE
1	57530	AIGUILLE PALIER 1 DI X 1-5/16 DE X 625 OUVERT
2	25957	ROULEAU PALIER 1 DI X 1312 DE X 625 (KB)

TABLEAU A-1. SPARE PARTS

Quantité	Numéro d'article	Description
2	25959	JOINT 1000 DI X 1312 DE X 125 (KB)
2	59156	VIS M6 X 10 X 60 MM SHCS
Meulage		
1	62633	ROUE MEULAGE 15 DIAM CBN GRAIN 130 TROU 8 MM
1	62634	ROUE MEULAGE 225 DIAM CBN GRAIN 130 TROU 8 MM
1	11132	FTG COUDE 3/8 NPTM X 3/8 NPTF STREET 90 DEG
1	13208	FTG RACCORD RAPIDE 1/2B X 1/2 NPTF FEMELLES AIR
1	14704	FTG MAMELON 1/2 NPTM X 1/2 NPTM
1	16615	FTG RACCORD RAPIDE 1/2B X 3/8 NPTM MÂLE AIR
1	32196	ENS. TUYAU 01 1/2 X 1/2 NPTM X 400
1	36328	VANNE BILLES 1/2 NPTF X 1/2 NPTF POIGNÉE OVALE
1	52734	FTG ADAPTATEUR 3/8 NPTF MÂLE X SAE-10M
1	57888	RONDELLE INSTALL. 21 MM DI X 35 MM DE X 3 MM TREMPÉE
1	62624	ROUE MEULAGE ARBOR CBN TIGE 10 MM FILET M8
1	63018	VIS M20 X 15 X 50MM SHCS
Entraînement		
1	62702	PIGNON D'ENGRENAGE 4DP 18T CM6200
2	63008	PAL. BILLE 35433 DI X 45276 DE X 5118
1	63014	CIRCLIP 3-1/2 OD X 109 THK
2	63042	CIRCLIP 4-1/2 OD X 109 THK
Mandrin DI		
8	89718	MANDRIN À BASE DE PLAQUE
4	91317	ASSEMBLAGE PIED PINCE NON NIVELLEMENT
8	89720	TUBE DE MANDRIN DE JAMBES 4,5 DE X 2,5 FILETÉS
12	89721	TUBE DE MANDRIN DE JAMBES 4,5 OD X 5,0 FILETÉ
8	89717	CAP END 4.50 DIA 4-4 OD 3 PAS FILETAGE 2-8 ID
4	57724	PONT OUTIL ÉCART 125 FF8200
8	57851	PONT OUTIL ÉCART 175 FF8200
4	57852	PONT OUTIL ÉCART 275 FF8200
96	58203	VIS M20 X 25 X 40MM SHCS
4	61362	PLAQUE SOUDÉE RESTRICTION SÉCURITÉ
Mandrin De		

TABLEAU A-1. SPARE PARTS

Quantité	Numéro d'article	Description
32	56192	VIS M20 X 25 X 70 MM SHCS
8	57724	PONT OUTIL ÉCART 125 FF8200
8	57851	PONT OUTIL ÉCART 175 FF8200
8	57852	PONT OUTIL ÉCART 275 FF8200
8	60755	ÉCART 5 POUCES MONTAGE DE FF8200
96	58203	VIS M20 X 25 X 40MM SHCS
16	59827	VIS M8 X 125 X 16 MM BHCS
8	60751	PLAQUE CENTRAGE MONTAGE DE FF8200
8	60752	RONDELLE PLATE MONTAGE DE FF8200
8	60753	ÉLÉMENT SOUDÉ TIGE MAINTIEN MONTAGE DE FF8200
40	60756	VIS M24 X 30 X 60 MM SSSFP
8	60757	ÉCROU M24 X 30 BRIDÉE
32	60760	VIS M20 X 25 160 MM SHCS
8	61433	ÉCRAN MONTAGE DE FF8200
8	62687	SUPPORT JAMBE VERTICALE MONTAGE DE CM6200
Montage sur une face		
32	12339	RONDELLE 3/4 FLTW
16	57348	VIS M16 X 20 X 60 MM SSSFP
32	58203	VIS M20 X 25 XX 40 MM SHCS
4	62887	ÉTRIER MONTAGE FACE CM6200
Servo / HPU		
1	55609	ENS. BOÎTE JONCTION ET PIQUETS SERVOMOTEUR CM62000 15 KW
1	55608	ENS. FAISCEAU CÂBLES CM6000 15 KW 50 FT
1	53433	EXTENSION CÂBLE 19 PIN 19 CONDUCTEUR FICHES MOULÉES 16 MÈTRES (50 pieds) LONGUE GAINE TPE
1	56204	HPU 25HP 415V ÉCRAN TACTILE SERVO AVEC COMMANDE D'ANGLE CE
400V Version		
1	51558	SERVOMOTEUR 15 KW 2000 RPM 400 V MITSUBISHI
1	56000	SERVO AMPLIFICATEUR MRJ3 480V 2 KW MITSUBISHI
200V Version		
1	63761	SERVOMOTEUR MITSUBISHI 15KW 2000 RPM 200V AV. FREIN
1	63762	SERVO AMPLIFICATEUR MRJ3 200V 2 KW MITSUBISHI

TABLEAU A-2. KIT D'OUTILS P/N 62029

P/N	Description	QTY
14735	EXTENSION CLÉ, EMBOUT 1/2 X 10	1
14818	CLÉ À CLIQUET, EMBOUT 1/2	1
19700	CONTENEUR EXPÉD. TOIT PLAT 20 X 875 X 105	2
33999	SET CLÉS HEXA 050 - 3/8 ROTULE D'EMBOUT BONDHUS (KB)	1
35516	MAILLET SOUPLE, DIAMÈTRE TÊTE 1-3/4 (KB)	1
38678	SET CLÉS HEXA 15 - 10MM ROTULE D'EMBOUT BONDHUS (KB)	1
46249	DOUILLE CLÉ HEXA 14 MM X 1/2	1
46250	DOUILLE CLÉ HEXA 10 MM X 1/2	1
46252	DOUILLE CLÉ HEXA 17 MM X 1/2	1
46253	DOUILLE CLÉ HEXA 12 MM X 1/2	1
53197	COMBINAISON CLÉS 24 mm 12PT 338mmLG SATIN FINISH	1
58350	EMBOUT CLÉ 46 mm X 8-9/16 ACCÈS LONG SERR.	2
58368	INDICATEUR ELECTRONIQUE 500 COURSE 2-1/4 DIAM FACE 0005" INC	1
58375	DOUILLE CLÉ HEXA 19MM X 1/2	1
63469	MOLETTE MODIFIÉE 5 DIAM 1/2" HEXA	1
64370	SUPPORT INDICATEUR BRAS ARTICULATÉ AVEC SOCLE MAG PORTÉE 282 MM NOGA	1
65183	LUBRIFIANT ANTI-GRIPPANT MOLY GRAPHITE PRESSION EXTREME 10 OZ CAN	1
65188	CLÉ PLATE 110 À 115 MM (4-1/2) DIAM 300 DIAM BROCHE	2
69465	EMBOUT CLÉ 46 MM COMBINAISON LONG	1
76807	CLÉ 3-1/8” EXTRÉMITÉ OUVERTE SIMPLE	1

APPENDIX B SCHÉMAS

Liste des schémas

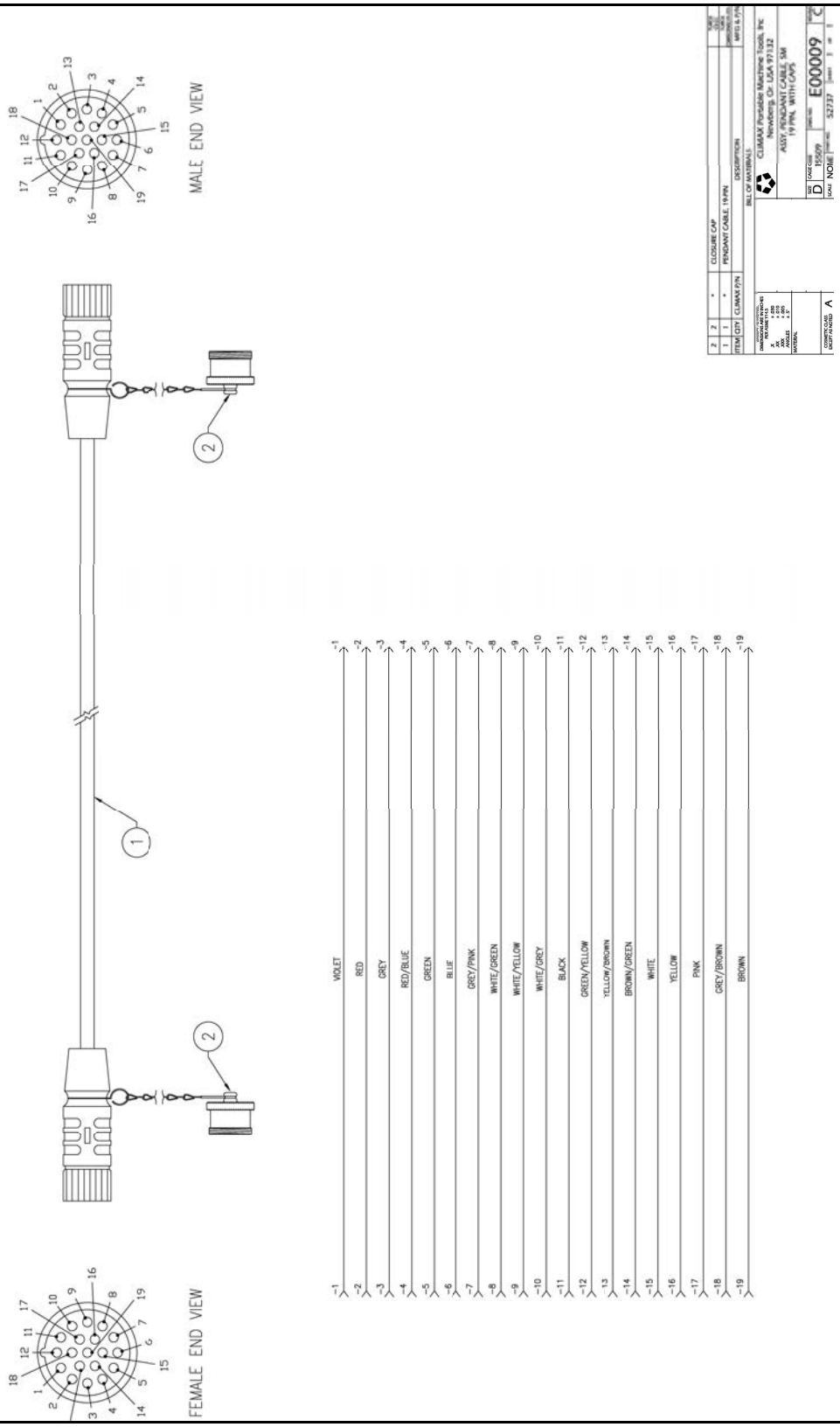

FIGURE B-1. SCHÉMA DES CÂBLES SUSPENDUS MR-J3 ET MR-J4 (P/N E00009)

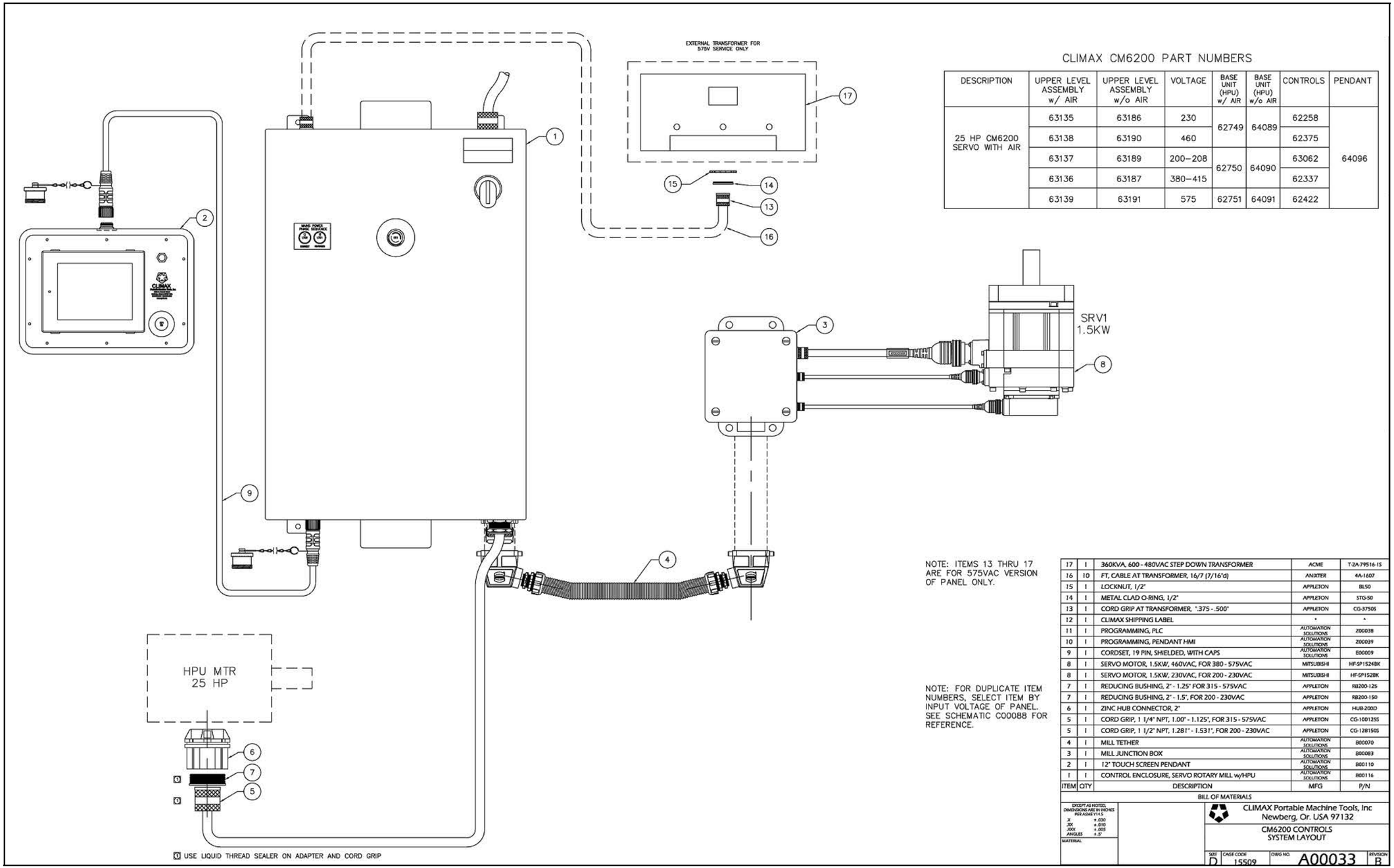

CLIMAX CM6200 PART NUMBERS

DESCRIPTION	UPPER LEVEL ASSEMBLY w/ AIR	UPPER LEVEL ASSEMBLY w/o AIR	VOLTAGE	BASE UNIT (HPU) w/ AIR	BASE UNIT (HPU) w/o AIR	CONTROLS	PENDANT
25 HP CM6200 SERVO WITH AIR	63135	63186	230	62749	64089	62258	64096
	63138	63190	460			62375	
	63137	63189	200–208	62750	64090	63062	
	63136	63187	380–415			62337	
	63139	63191	575	62751	64091	62422	

ITEM	QTY	DESCRIPTION	MFG	P/N
17	1	360KVA, 600 - 480VAC STEP DOWN TRANSFORMER	ACME	T-2A-79516-15
16	10	FT, CABLE AT TRANSFORMER, 16/7 (7/16"d)	ANIXTER	4A-1607
15	1	LOCKNUT, 1/2"	APPLETON	BL50
14	1	METAL CLAD O-RING, 1/2"	APPLETON	STG-50
13	1	CORD GRIP AT TRANSFORMER, ".375 - .500"	APPLETON	CG-3750S
12	1	CLIMAX SHIPPING LABEL	*	*
11	1	PROGRAMMING, PLC	AUTOMATION SOLUTIONS	Z00038
10	1	PROGRAMMING, PENDANT HMI	AUTOMATION SOLUTIONS	Z00039
9	1	CORDSET, 19 PIN, SHIELDED, WITH CAPS	AUTOMATION SOLUTIONS	E00009
8	1	SERVO MOTOR, 1.5KW, 460VAC, FOR 380 - 575VAC	MITSUBISHI	HF-SP1524BK
8	1	SERVO MOTOR, 1.5KW, 230VAC, FOR 200 - 230VAC	MITSUBISHI	HF-SP152BK
7	1	REDUCING BUSHING, 2" - 1.25" FOR 315 - 575VAC	APPLETON	RB200-125
7	1	REDUCING BUSHING, 2" - 1.5", FOR 200 - 230VAC	APPLETON	RB200-150
6	1	ZINC HUB CONNECTOR, 2"	APPLETON	HUB-200D
5	1	CORD GRIP, 1 1/4" NPT, 1.00" - 1.125", FOR 315 - 575VAC	APPLETON	CG-100125S
5	1	CORD GRIP, 1 1/2" NPT, 1.281" - 1.531", FOR 200 - 230VAC	APPLETON	CG-128150S
4	1	MILL TETHER	AUTOMATION SOLUTIONS	B00070
3	1	MILL JUNCTION BOX	AUTOMATION SOLUTIONS	B00083
2	1	12" TOUCH SCREEN PENDANT	AUTOMATION SOLUTIONS	B00110
1	1	CONTROL ENCLOSURE, SERVO ROTARY MILL w/HPU	AUTOMATION SOLUTIONS	B00116

BILL OF MATERIALS

EXCEPT AS NOTED, DIMENSIONS ARE IN INCHES PER ASME Y14.5
.X ± .030
.XX ± .010
.XXX ± .005
ANGLES ± .5°
MATERIAL

FIGURE B-2. DISPOSITION DU SYSTÈME MR-J3 (P/N A00033)

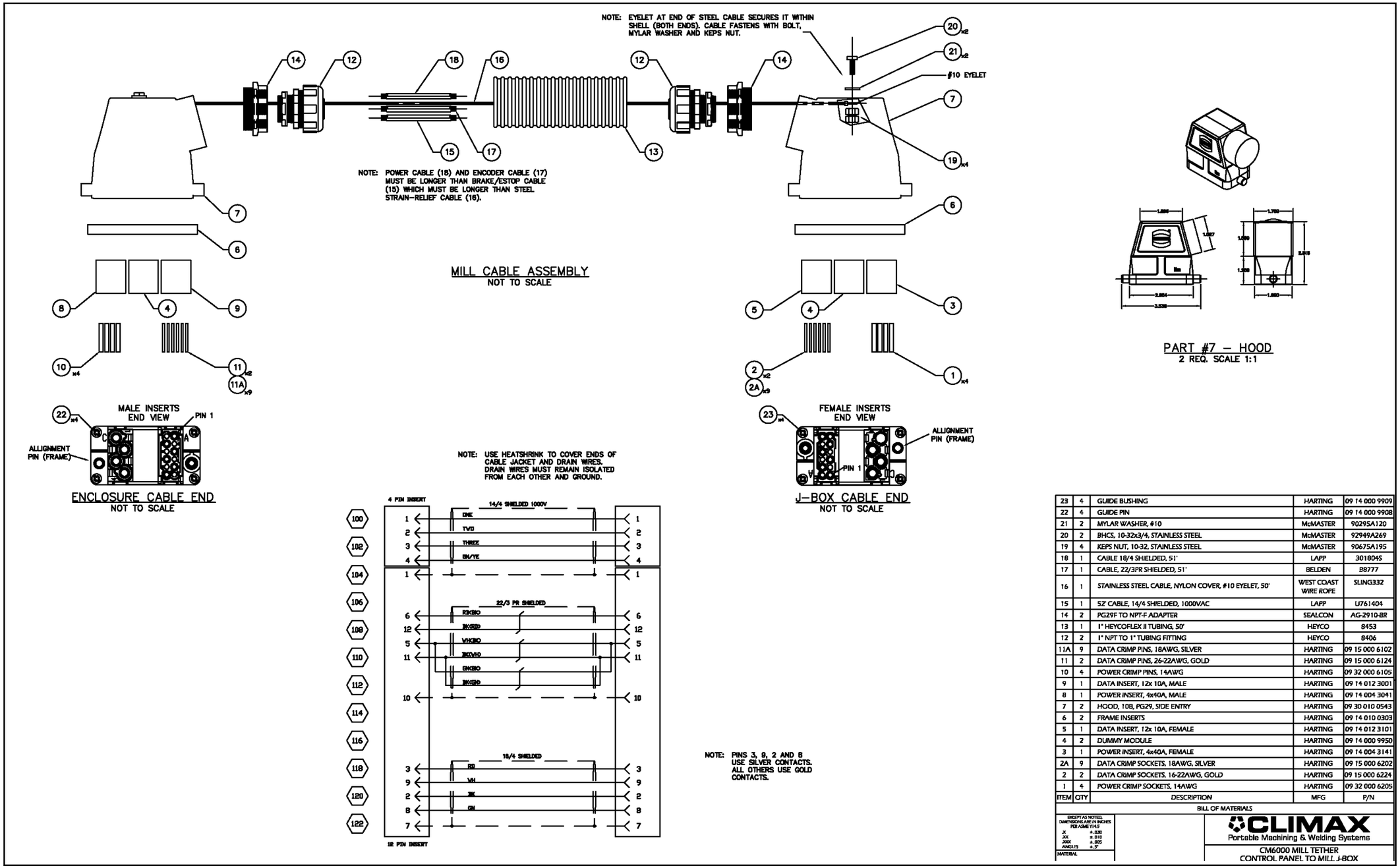

ITEM	QTY	DESCRIPTION	MFG	P/N
23	4	GUIDE BUSHING	HARTING	09 14 000 9909
22	4	GUIDE PIN	HARTING	09 14 000 9908
21	2	MYLAR WASHER, #10	McMASTER	90295A120
20	2	BHCS, 10-32x3/4, STAINLESS STEEL	McMASTER	92949A269
19	4	KEPS NUT, 10-32, STAINLESS STEEL	McMASTER	90675A195
18	1	CABLE 18/4 SHIELDED, 51'	LAPP	3018045
17	1	CABLE, 22/3PR SHIELDED, 51'	BELDEN	88777
16	1	STAINLESS STEEL CABLE, NYLON COVER, #10 EYELET, 50'	WEST COAST WIRE ROPE	SLING332
15	1	52' CABLE, 14/4 SHIELDED, 1000VAC	LAPP	U761404
14	2	PG29F TO NPT-F ADAPTER	SEALCON	AG-2910-BR
13	1	1" HEYCOFLEX II TUBING, 50'	HEYCO	8453
12	2	1" NPT TO 1" TUBING FITTING	HEYCO	8406
11A	9	DATA CRIMP PINS, 18AWG, SILVER	HARTING	09 15 000 6102
11	2	DATA CRIMP PINS, 26-22AWG, GOLD	HARTING	09 15 000 6124
10	4	POWER CRIMP PINS, 14AWG	HARTING	09 32 000 6105
9	1	DATA INSERT, 12x 10A, MALE	HARTING	09 14 012 3001
8	1	POWER INSERT, 4x40A, MALE	HARTING	09 14 004 3041
7	2	HOOD, 10B, PG29, SIDE ENTRY	HARTING	09 30 010 0543
6	2	FRAME INSERTS	HARTING	09 14 010 0303
5	1	DATA INSERT, 12x 10A, FEMALE	HARTING	09 14 012 3101
4	2	DUMMY MODULE	HARTING	09 14 000 9950
3	1	POWER INSERT, 4x40A, FEMALE	HARTING	09 14 004 3141
2A	9	DATA CRIMP SOCKETS, 18AWG, SILVER	HARTING	09 15 000 6202
2	2	DATA CRIMP SOCKETS, 16-22AWG, GOLD	HARTING	09 15 000 6224
1	4	POWER CRIMP SOCKETS, 14AWG	HARTING	09 32 000 6205

BILL OF MATERIALS

EXCEPT AS NOTED, DIMENSIONS ARE IN INCHES PER ASME Y14.5
X ±.030
XX ±.010
XXX ±.005
ANGLES ±.5°
MATERIAL

FIGURE B-3. ENSEMBLE D'ATTACHE DE BROYEUR MR-J3 ET MR-J4 (P/N B00070) (P/N B00070)

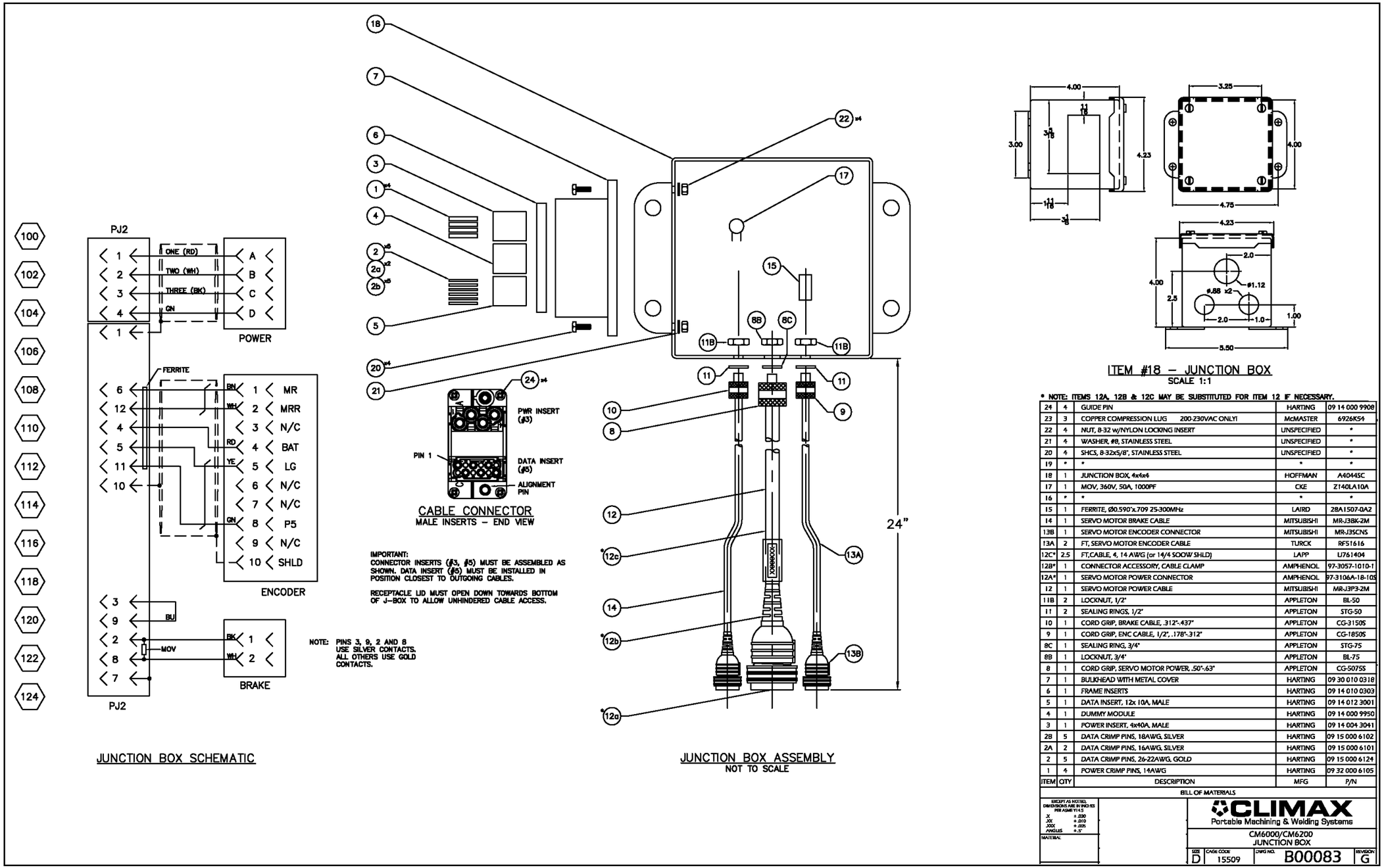

FIGURE B-4. ENSEMBLE DE BOÎTE DE JONCTION MR-J3 ET MR-J4 (P/N B00083)

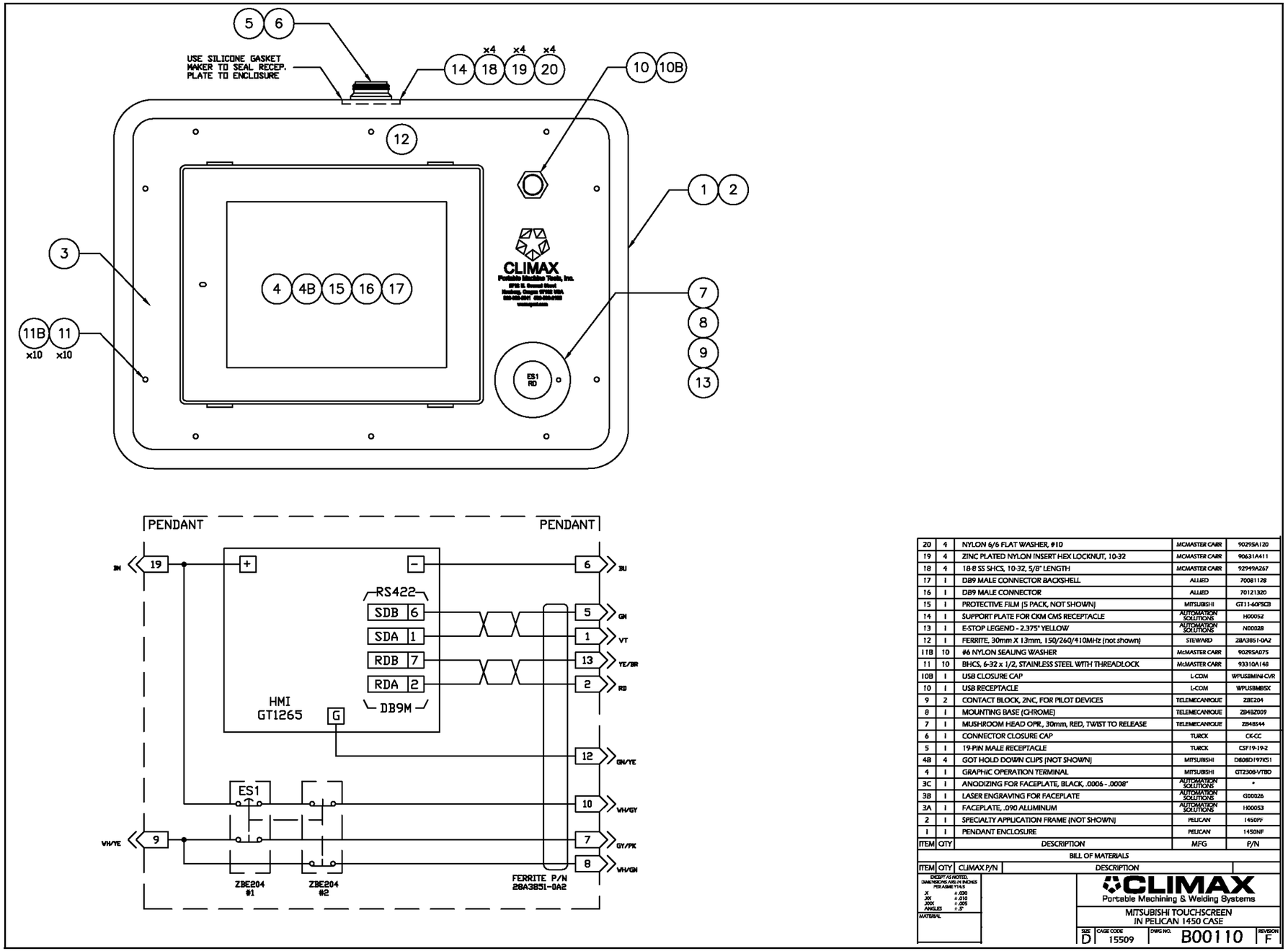

ITEM	QTY	DESCRIPTION	MFG	P/N
20	4	NYLON 6/6 FLAT WASHER, #10	MCMASTER CARR	90295A120
19	4	ZINC PLATED NYLON INSERT HEX LOCKNUT, 10-32	MCMASTER CARR	90631A411
18	4	18-8 SS SHCS, 10-32, 5/8" LENGTH	MCMASTER CARR	92949A267
17	1	DB9 MALE CONNECTOR BACKSHELL	ALLIED	70081128
16	1	DB9 MALE CONNECTOR	ALLIED	70121320
15	1	PROTECTIVE FILM (5 PACK, NOT SHOWN)	MITSUBISHI	GT11-60PSCB
14	1	SUPPORT PLATE FOR CKM CMS RECEPTACLE	AUTOMATION SOLUTIONS	H00052
13	1	E-STOP LEGEND - 2.375" YELLOW	AUTOMATION SOLUTIONS	N00028
12	1	FERRITE, 30mm X 13mm, 150/260/410MHz (not shown)	STEWARD	28A3851-0A2
11B	10	#6 NYLON SEALING WASHER	McMASTER CARR	90295A075
11	10	BHCS, 6-32 x 1/2, STAINLESS STEEL WITH THREADLOCK	McMASTER CARR	93310A148
10B	1	USB CLOSURE CAP	L-COM	WPUSBMINI-CVR
10	1	USB RECEPTACLE	L-COM	WPUSBMBSX
9	2	CONTACT BLOCK, ZNC, FOR PILOT DEVICES	TELEMECANIQUE	ZBE204
8	1	MOUNTING BASE (CHROME)	TELEMECANIQUE	ZB4BZ009
7	1	MUSHROOM HEAD OPR., 30mm, RED, TWIST TO RELEASE	TELEMECANIQUE	ZB4BS44
6	1	CONNECTOR CLOSURE CAP	TUROX	CK-CC
5	1	19-PIN MALE RECEPTACLE	TUROX	CSF19-19-2
4B	4	GOT HOLD DOWN CLIPS (NOT SHOWN)	MITSUBISHI	D608D197K51
4	1	GRAPHIC OPERATION TERMINAL	MITSUBISHI	GT2308-VTBD
3C	1	ANODIZING FOR FACEPLATE, BLACK, .0006 - .0008"	AUTOMATION SOLUTIONS	*
3B	1	LASER ENGRAVING FOR FACEPLATE	AUTOMATION SOLUTIONS	G00026
3A	1	FACEPLATE, .090 ALUMINUM	AUTOMATION SOLUTIONS	H00053
2	1	SPECIALTY APPLICATION FRAME (NOT SHOWN)	PELICAN	1450FF
1	1	PENDANT ENCLOSURE	PELICAN	1450NF

BILL OF MATERIALS

ITEM	QTY	CLIMAX P/N	DESCRIPTION

EXCEPT AS NOTED DIMENSIONS ARE IN INCHES PER ASME Y14.5
X ±.030
.XX ±.010
.XXX ±.005
ANGLES ±.5°
MATERIAL

CLIMAX
Portable Machining & Welding Systems

MITSUBISHI TOUCHSCREEN
IN PELICAN 1450 CASE

SIZE D | CAGE CODE 15509 | DWG NO. B00110 | REVISION F

FIGURE B-5. ENSEMBLE PENDANT D'OPÉRATEUR MR-J3 ET MR-J4 (P/N B00110)

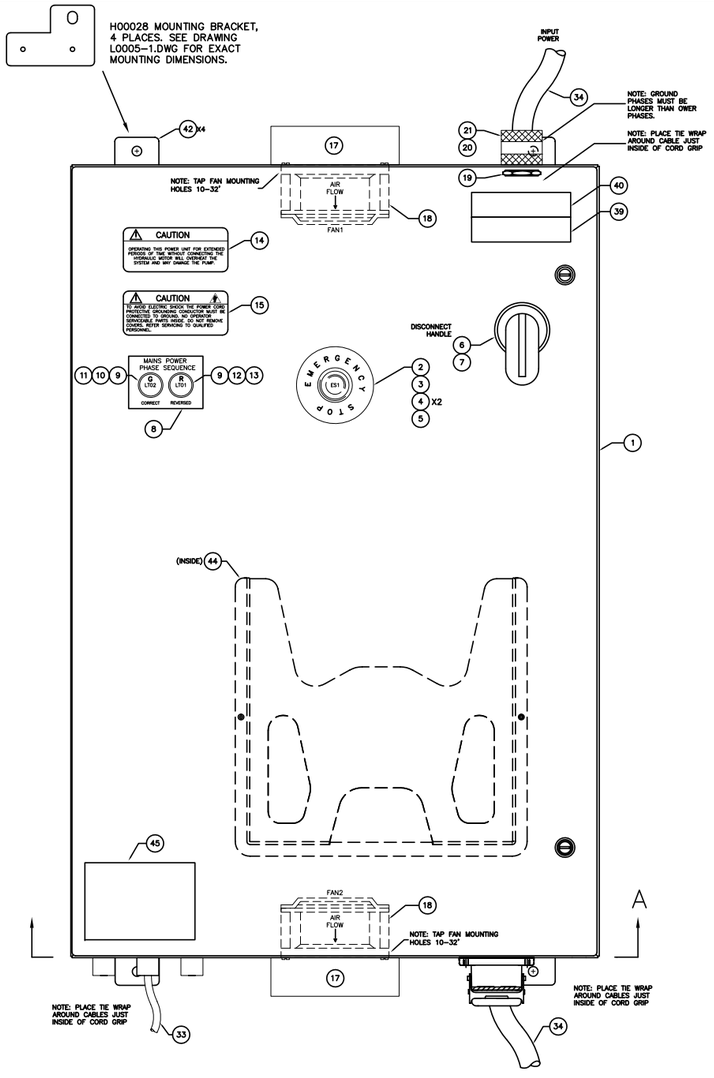

CONTROLS ENCLOSURE

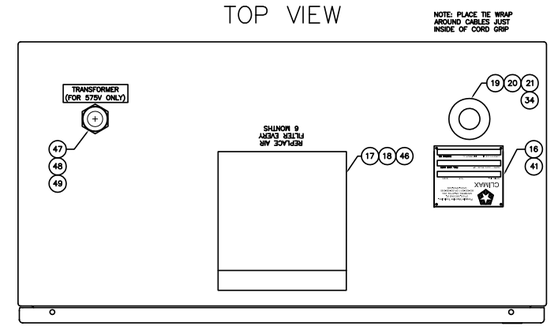

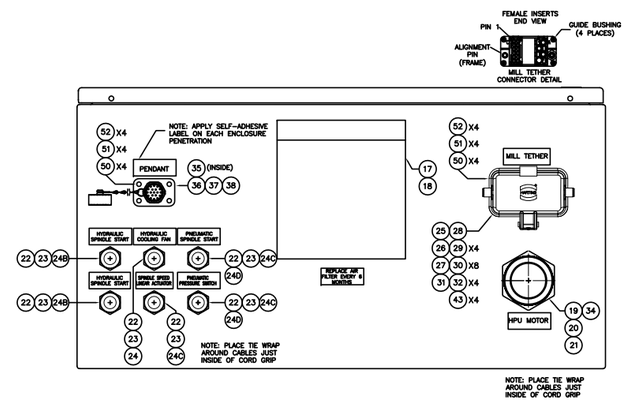

BOTTOM VIEW
(DETAIL A)

NOTE: FOR DUPLICATE ITEM NUMBERS, SELECT ITEM BY INPUT VOLTAGE OF PANEL. SEE SCHEMATIC C00088 FOR REFERENCE.

PROJECT DRAWINGS	DRAWING #	CLIMAX PART #	NOTES
TOP LEVEL ASSEMBLY	A00033	"	"
SCHEMATIC	C00088	"	"
LAYOUT: CONTROL PANEL	B00116-1, B00116-2	"	"
LAYOUT: PENDANT	B00110	"	"
LAYOUT: MISC	B00083	"	J-BOX ASSY
CABLE ASSY 1	B00070	"	MILL TETHER ASSY
CABLE ASSY 2	E00009	"	PENDANT CABLE ASSY
CABLE ASSY 3	-	"	-
ENCLOSURE MECHANICALS	L00005	"	MECHANICAL DIMS

ITEM	QTY	DESCRIPTION	MFG	P/N
		BILL OF MATERIALS		
52	8	#6 KEPS NUT	McMASTER	90675A007
51	8	#6 NYLON WASHER	MCMASTER	90295A35
50	8	6-32 BUTTON HEAD CAP SCREW, 1/2"	McMASTER	92949A146
49	1	CORD GRIP, 3/4" NPT, .375" - .500" CORD, FOR 575VAC	APPLETON	CG-37755
48	1	O-RING 3/4" NPT, FOR 575VAC	APPLETON	STG-75
47	1	LOCKNUT, 3/4" NPT, FOR 575VAC	APPLETON	BL75
46	2	LEVER LOCK TERMINAL BLOCKS	WAGO	222-412
45	1	ARCFLASH WARNING LABEL	SAFETY SIGN	J5543
44	1	DATA POCKET	HOFFMAN	ADP2
43	4	GUIDE BUSHINGS	HARTING	09 14 000 9909
42	4	ENCLOSURE MOUNTING BRACKETS	AUTOMATION SOLUTIONS	H00028
41	4	SCREW DRIVE #2 X 1/4	FASTENAL	32213
40	1	575V LABEL - 4.5 X 1.125	MCMASTER	5894T922
40	1	460V LABEL - 4.5 X 1.125	MCMASTER	5894T862
40	1	415V LABEL - 4.5 X 1.125	PANDUIT	PCV-415BY
40	1	380V LABEL - 4.5 X 1.125	MCMASTER	5894T912
40	1	230V LABEL - 4.5 X 1.125	MCMASTER	5894T832
40	1	208V LABEL - 4.5 X 1.125	MCMASTER	5894T842
39	1	THREE PHASE LABEL - 4.5 X 1.125	MCMASTER	5894T4
38	1	CLOSURE CAP	TURCK	CK-CC
37	1	SUPPORT PLATE FOR CKM CMS SUPPORT PLATE	AUTOMATION SOLUTIONS	H00052
36	1	RECEPTACLE, 19 PIN, FEMALE, 2 METER	TURCK	CKF 19-19-2
35	1	FERRITE BEAD, CABLE, 196 OHMS @ 100MHz	ALLIED	314-0253
34	25	FT, PORTABLE POWER CORD, 8-4C, TYPE W FOR 460-575VAC	ANIXTER	5B-0804C
34	25	FT, PORTABLE POWER CORD, 6-4C, TYPE W FOR 380-415VAC	ANIXTER	5B-0604C
34	25	FT, PORTABLE POWER CORD, 2-4C, TYPE W FOR 200-230VAC	ANIXTER	5B-0204C
33	11	FT, CORD, 16AWG, 2 CONDUCTOR, SEOOW	COMMONLY AVAILABLE	-
32	4	HAN MODULAR CONNECTOR, CONTACT, FEMALE, AWG 14	HARTING	09 32 000 6205
31	1	HAN MODULAR CONNECTOR, HOUSING, BULKHEAD MOUNT	HARTING	09 30 010 0318
30	10	HAN MODULAR CONNECTOR, CONTACT, FEMALE AWG 26-22	HARTING	09 15 000 6224
29	4	HAN MODULAR CONNECTOR, CONTACT, FEMALE AWG 16	HARTING	09 15 000 6201
28	1	HAN MODULAR CONNECTOR, FEMALE INSERT, 12 PIN	HARTING	09 14 012 3101
27	1	HAN MODULAR CONECTOR, FRAME FOR 3 MODULES	HARTING	09 14 010 0303
26	1	HAN MODULAR CONNECTOR, FEMALE INSERT, 4 PINS	HARTING	09 14 004 3141
25	1	HAN MODULAR CONNECTOR, DUMMY MODULE	HARTING	09 14 000 9950
24D	2	HOLE PLUG	HOFFMAN	A5050
24C	3	CORD GRIP, 1/2" NPT, 0.125" - 0.187" CORD	APPLETON	CG-12505
24B	2	CORD GRIP, 1/2" NPT, 0.187" - 0.312" CORD	APPLETON	CG-18505
24	1	CORD GRIP, 1/2" NPT, 0.312" - 0.437" CORD	APPLETON	CG-31505
23	6	LOCKNUT, 1/2" NPT	APPLETON	BL-50
22	6	O-RING 1/2" NPT	APPLETON	STG-50
21	2	CORD GRIP, 1 1/4" NPT, 1.00" - 1.125" CORD, FOR 315 - 575VAC	APPLETON	CG-10012SS
21	2	CORD GRIP, 1 1/2" NPT, 1.281" - 1.531" CORD, FOR 200 - 230VAC	APPLETON	CG-12815OS
20	2	O-RING 1 1/4" NPT, FOR 315 - 575VAC	APPLETON	STG-125
20	2	O-RING 1 1/2" NPT, FOR 200 - 230VAC	APPLETON	STG-150
19	2	LOCKNUT, 1 1/4" NPT, FOR 315 - 575VAC	APPLETON	BL125
19	2	LOCKNUT, 1 1/2" NPT, FOR 200 -230VAC	APPLETON	BL150
18	2	FANS, 24VDC	ORION	OD1238-24HB
17	2	EXHAUST	HAEWA	3142-0148-00-07
16	1	NAMEPLATE ELECTRICAL PANELS	CLIMAX	39125
15	1	LABEL, CAUTION ELECTRIC	CLIMAX	37576
14	1	LABEL, CAUTION HYDRAULIC OVERHEAT	CLIMAX	15396
13	1	LED MODULE, 24VAC/DC, RED	TELEMECANIQUE	ZBVB4
12	1	PILOT LIGHT OPERATOR, RED	TELEMECANIQUE	ZB4BV043
11	1	LED MODULE, 24VAC/DC, GREEN	TELEMECANIQUE	ZBVB3
10	1	PILOT LIGHT OPERATOR, GREEN	TELEMECANIQUE	ZB4BV033
9	2	MOUNTING BASE	TELEMECANIQUE	ZB4BZ009
8	1	LEGEND PLATE, "PHASE SEQUENCE"	AUTOMATION SOLUTIONS	F00011
7	1	DISCONNECT SHAFT FOR 575VAC	ABB	OXP10X500
7	1	DISCONNECT SHAFT	ABB	OXPX290
6	1	DISCONNECT HANDLE FOR 575VAC	ABB	OHY95L10
6	1	DISCONNECT HANDLE	ABB	OHY80L6
5	1	PUSHBUTTON LEGEND, "EMERGENCY STOP"	TELEMECANIQUE	ZBY8330
4	2	CONTACT BLOCK, NC	TELEMECANIQUE	ZBE102
3	1	MOUNTING BASE, CHROME	TELEMECANIQUE	ZB4BZ009
2	1	MUSH-HEAD OPERATOR	TELEMECANIQUE	ZB4BS54
1	1	ENCLOSURE, 36" X 24" X12"	AUTOMATION SOLUTIONS	L00005

EXCEPT AS NOTED DIMENSIONS ARE IN INCHES PER ASME Y14.5
.X ± .030
.XX ± .010
.XXX ± .005
ANGLES ± 5°
MATERIAL
COSMETIC CLASS EXCEPT AS NOTED A

CLIMAX
Portable Machining & Welding Systems

CM6200 ROTARY MILL
MULTIPLE VOLTAGES

SIZE D | CAGE CODE 15509 | DWG NO. B00116 | REVISION K
SCALE NONE | SHEET 1 OF 2

FIGURE B-6. FEUILLE DE MONTAGE EXTÉRIEUR DU PANNEAU DE COMMANDE MR-J3 1 (P/N B00116)

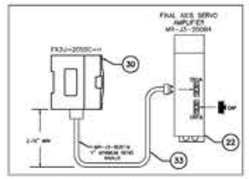

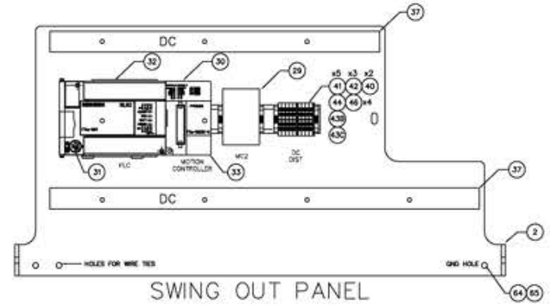

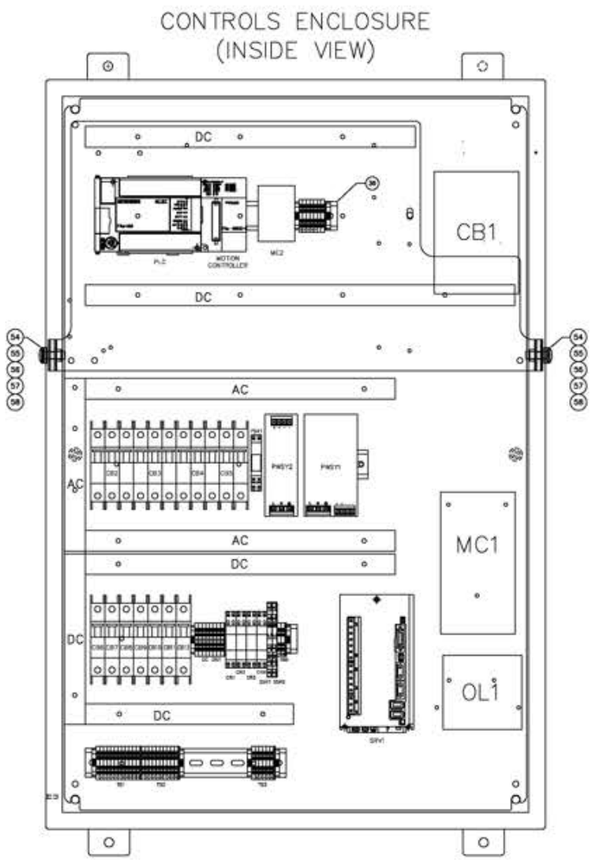

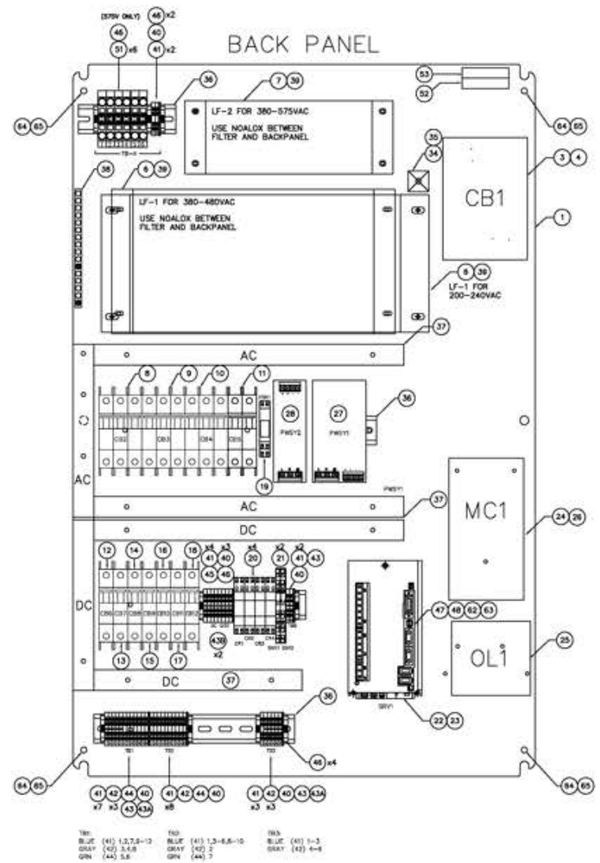

ITEM	QTY	DESCRIPTION	MFG	P/N
		BILL OF MATERIALS		
1	1	BACK PANEL	AUTOMATION SOLUTIONS	H00029
2	1	SWING OUT PANEL	AUTOMATION SOLUTIONS	K00031
3	1	CB1, MAIN BREAKER, 80A, FOR 380 - 460VAC	ABB	T3N150TW
3	1	CB1, MAIN BREAKER, 60A, FOR 575VAC	ABB	T3N060TW
4	1	DISCONNECT KIT FOR T1N & T3N BREAKER	ABB	KT3VD-M
4	1	DISCONNECT KIT FOR T3N BREAKER - 575VAC	ABB	KT3J-VDM
		SEE ITEMS 60 & 61 FOR DISCONNECT LUG KITS		
6	1	LF1, LINE FILTER, 100A FOR 200 - 230VAC	RADIUS POWER	RP325-100-1000S
6	1	LF1, LINE FILTER, 60A, FOR 380 - 460VAC	CORCOM	6GAYT6C-F7477
6A	1	LF1, MOUNTING KIT, FOR 380 - 460VAC	CORCOM	AA405
7	1	LF2, LINE FILTER, 15A, FOR 575VAC	RADIUS POWER	RP380-15-1000-S
7	1	LF2, LINE FILTER, 15A, FOR 380 - 460VAC	RADIUS POWER	RP325-15-1000-S
8	1	CB2, CIRCUIT BREAKER, 3 POLE, 1A, FOR 200-230VAC	TELEMECANIQUE	60168
8	1	CB2, CIRCUIT BREAKER, 3 POLE, 1A, FOR 380-575VAC	TELEMECANIQUE	MGN61356
9	1	CB3, CIRCUIT BREAKER, 3 POLE, 20A, FOR 200-230VAC	TELEMECANIQUE	60180
9	1	CB3, CIRCUIT BREAKER, 3 POLE, 15A, FOR 380-575VAC	TELEMECANIQUE	MGN61331
10	1	CB4, CIRCUIT BREAKER, 2 POLE, 10A, FOR 200-230VAC	TELEMECANIQUE	60144
10	1	CB4, CIRCUIT BREAKER, 3 POLE, 6A, FOR 380-575VAC	TELEMECANIQUE	MGN61328
11	1	CB5, CIRCUIT BREAKER, 2 POLE, 10A, FOR 200-230VAC	TELEMECANIQUE	60144
11	1	CB5, CIRCUIT BREAKER, 2 POLE, 6A, FOR 380-575VAC	TELEMECANIQUE	MGN61317
12	1	CB6, CIRCUIT BREAKER, 1 POLE, 2A, FOR ALL VOLTAGES	TELEMECANIQUE	60103
13	1	CB7, CIRCUIT BREAKER, 1 POLE, 8A, FOR ALL VOLTAGES	TELEMECANIQUE	60109
14	1	CB8, CIRCUIT BREAKER, 1 POLE, 2A, FOR ALL VOLTAGES	TELEMECANIQUE	60103
15	1	CB9, CIRCUIT BREAKER, 1 POLE, 5A, FOR ALL VOLTAGES	TELEMECANIQUE	60106
16	1	CB10, CIRCUIT BREAKER, 1 POLE, 1A, FOR ALL VOLTAGES	TELEMECANIQUE	60101
17	1	CB11, CIRCUIT BREAKER, 1 POLE, 2A, FOR ALL VOLTAGES	TELEMECANIQUE	60103
18	1	CB12, CIRCUIT BREAKER, 1 POLE, 3A, FOR ALL VOLTAGES	TELEMECANIQUE	60104
19	1	PHASE SEQUENCE RELAY	TELEMECANIQUE	RM4TG20
20	4	CR1, CR2, CR3, CR4, RELAY, DPDT	WAGO	788-312
21	2	SSR1, SSR2, SOLID STATE RELAY	WAGO	859-740
22	1	SERVO AMP, 2KW, 400V FOR 200 - 230VAC	MITSUBISHI	MR-J3-20085
22	1	SERVO AMP, 2KW, 400V FOR 380 - 575VAC	MITSUBISHI	MR-J3-200B54
23	1	ENCODER CABLE, 2M	MITSUBISHI	MR-J3ENSCBL2M-H
24	1	MC1, CONTACTOR, 80A, 24VDC, FOR 200 -230VAC	EATON	XTCE080F00TD
24	1	MC1, CONTACTOR, 40A, 24VDC, FOR 380 - 600VAC	EATON	XTCE040G00TD
25	1	OVERLOAD RELAY, 70A-100A, FOR 200-230VAC	EATON	XTOB100DC1
25	1	OVERLOAD RELAY, 50A-65A, FOR 380-415VAC	EATON	XTOB057DC1
26	1	AUX. CONTACTS FOR MC1	EATON	XTCE018G20
27	1	PWS1, POWER SUPPLY, 24VDC, 480W, FOR 200-230VAC	PULS	QS20.241
27	1	PWS1, POWER SUPPLY, 24VDC, 480W, FOR 380-575VAC	PULS	QT70.241
28	1	PWS2, POWER SUPPLY, 24VDC, 120W FOR 200-230VAC	PULS	CS5.241
28	1	PWS2, POWER SUPPLY, 24VDC, 120W FOR 380-575VAC	PULS	CTS.241
29	1	MC2, CONTACTOR, NON-REVERSING, 9A, 24VDC COIL	EATON	XTRMC10A40TD
30	1	FX3U SSCNENT 2 AXIS POSITIONING MODULE	MITSUBISHI	FX3U-20SSC-H
31	1	8 PIN MINI-DIN 8-CABLE - P/N CS-DNPDMBMMQ2-015	AMPHENOL	SEE DESCRIPTION
32	1	PLC	MITSUBISHI	FX3U-16MR/DS
33	1	SSCNET III CABLE, 1 METER	MITSUBISHI	MR-J3BUS1M
34	1	THUMB SCREW FOR SWING OUT PANEL STANDOFF	MCMASTER	97008A612
35	1	STANDOFF FOR SWING OUT PANEL, CUT TO 6"	MCMASTER	4706ST209
36	3	DIN RAIL	EATON	XBANS3575PL
37	3	WIRE DUCT	ABB	QD100G300HW
38	1	GROUND BAR	EATON	GBK14
39	6	TERMINAL INSULATORS, BLACK, 200-230VAC & 575VAC	VTE	800NSV14
39	12	TERMINAL INSULATORS, BLACK, 380-460VAC	VTE	800NSV14
40	8	END PLATE, ORN	WAGO	2002-1292
41	28	TERM BLOCK, 5mm, BLUE	WAGO	2002-1204
42	10	TERM BLOCK, 5mm, GRAY	WAGO	2002-1201
43	3	JUMPER, 2 PIN	WAGO	2002-402
43A	3	JUMPER, 3 PIN	WAGO	2002-403
43B	3	JUMPER, 4 PIN	WAGO	2002-404
43C	1	JUMPER, 5 PIN	WAGO	2002-405
44	5	TERM BLOCK, 5mm, GREEN/YELLOW, GROUND	WAGO	2002-1207
45	1	END PLATE	WAGO	2006-1292
46	19	STOP BLOCK	WAGO	249-116
47	1	CN3 CONNECTOR	3M	10320-52F0-008
48	1	CN3 CONNECTOR	3M	10120-3000PE
49	1	SMALL FERRITE	STEWARD	28A6640-0A2
50	2	LARGE FERRITE	STEWARD	28A3051-0A2

NOTE: FOR DUPLICATE ITEM NUMBERS, SELECT ITEM BY INPUT VOLTAGE OF PANEL. SEE SCHEMATIC C00088 FOR REFERENCE.

ITEM	QTY	DESCRIPTION	MFG	P/N
51	1	CB1, LUG KIT FOR MAIN BREAKER FOR 200 - 230VAC	ABB	KT3225-3
52	1	COPPER COMPRESSION LUGS FOR 200-230VAC	MCMASTER	6926K54
53	2	3/4" GRADE 2 NYLON-INSERT THIN HEX LOCKNUT	MCMASTER	90566A031
54	2	3/4" OD NEOPRENE SEALING WASHER	MCMASTER	94709A418
55	2	1.5" OD, ZINC PLATED STEEL FLAT WASHER	MCMASTER	91090A115
56	4	1.5" OD LOW-FRICTION PTFE FLAT WASHER	MCMASTER	9563A487
57	2	3/8 X 1" MS, 18-8SS PAN HEAD	MCMASTER	91772A677
58	1	CB1, LUG KIT FOR MAIN BREAKER, INCOMING LUGS FOR 575V	ABB	K11BC
59	1	CB1, LUG KIT FOR MAIN BREAKER, OUTGOING LUGS FOR 575V	ABB	K11A
60	1	MERGE WITH ITEM 51		
61	1	MERGE WITH ITEM 52		
62	1	SERVO SAFETY CABLE PIGTAIL	MITSUBISHI	MR-D05UDL3M-B
63	1	ENCODER CONNECTOR KIT	MITSUBISHI	MR-J3SCNS
64	5	1/4-20 x 3/4" GND BOLT	MCMASTER	91309A5401
65	10	1/4-20 KEPS NUT	MCMASTER	90675A029
66	1	575V LABEL - 2.25 X .5	MCMASTER	58947923
67	1	460V LABEL - 2.25 X .5	MCMASTER	58947863
68	1	415V LABEL - 2.25 X .5	PANDUIT	PCV-415CY
69	1	380V LABEL - 2.25 X .5	MCMASTER	58947913
70	1	230V LABEL - 2.25 X .5	MCMASTER	58947833
71	1	208V LABEL - 2.25 X .5	MCMASTER	58947843
72	1	THREE PHASE LABEL - 2.25 X .5	MCMASTER	58947416
73	6	TERM BLOCK, 10MM, GRAY, 575VAC	WAGO	2006-1201

EXCEPT AS NOTED DIMENSIONS ARE IN INCHES PER ASME Y14.5
X ±.030
XX ±.010
XXX ±.005
ANGLES ±.5°
MATERIAL
COSMETIC CLASS EXCEPT AS NOTED A

CLIMAX
Portable Machining & Welding Systems
CM6200 ROTARY MILL
MULTIPLE VOLTAGES
SIZE D | CAGE CODE 15509 | DWG NO. B00116 | REVISION K
SCALE NONE | SHEET 2 OF 2

FIGURE B-7. FEUILLE D'ASSEMBLAGE INTÉRIEUR DU PANNEAU DE COMMANDE MR-J3 2 (P/N B00116)

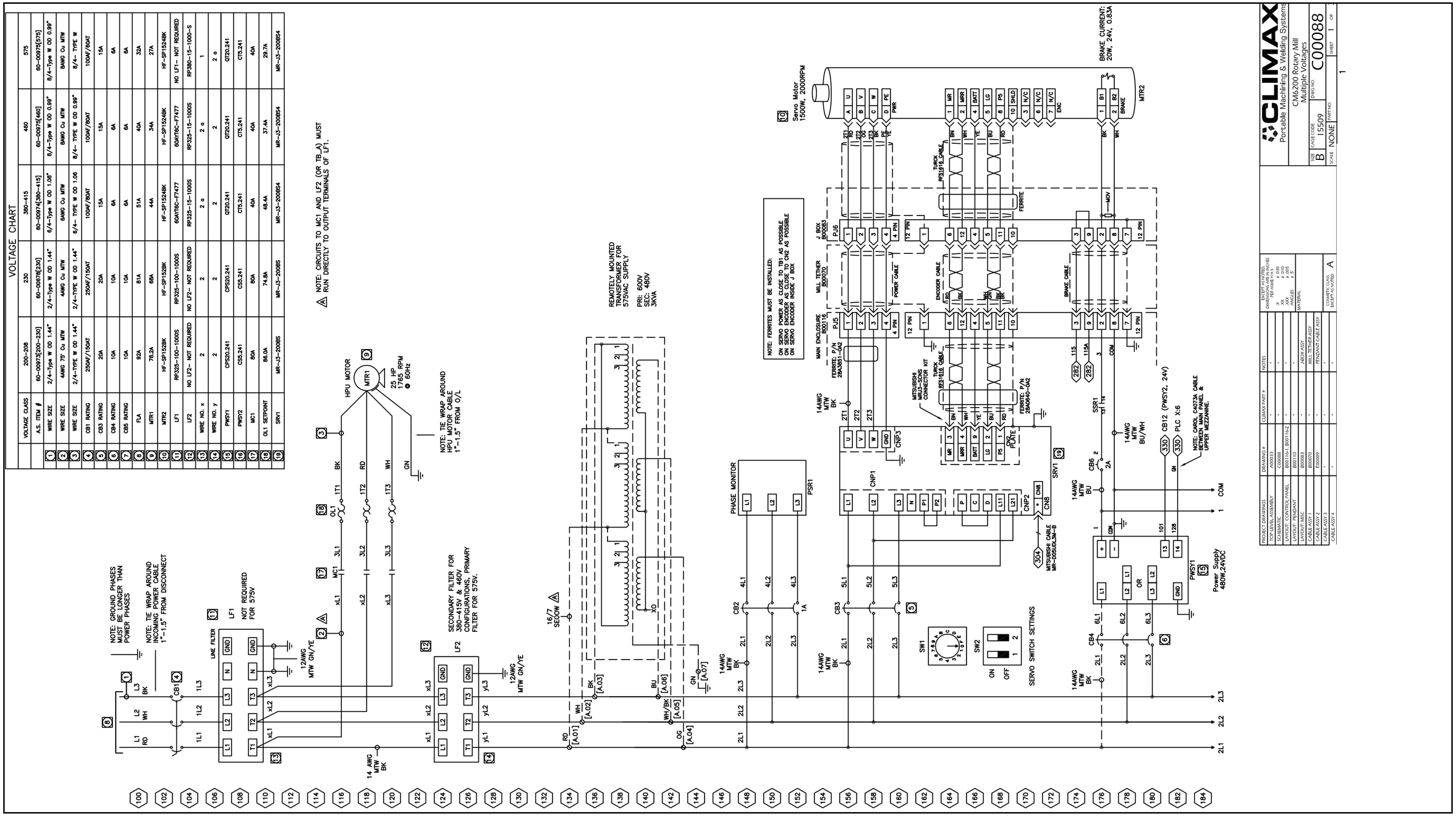

FIGURE B-8. FICHE DE MONTAGE MR-J3 1 (P/N C00088)

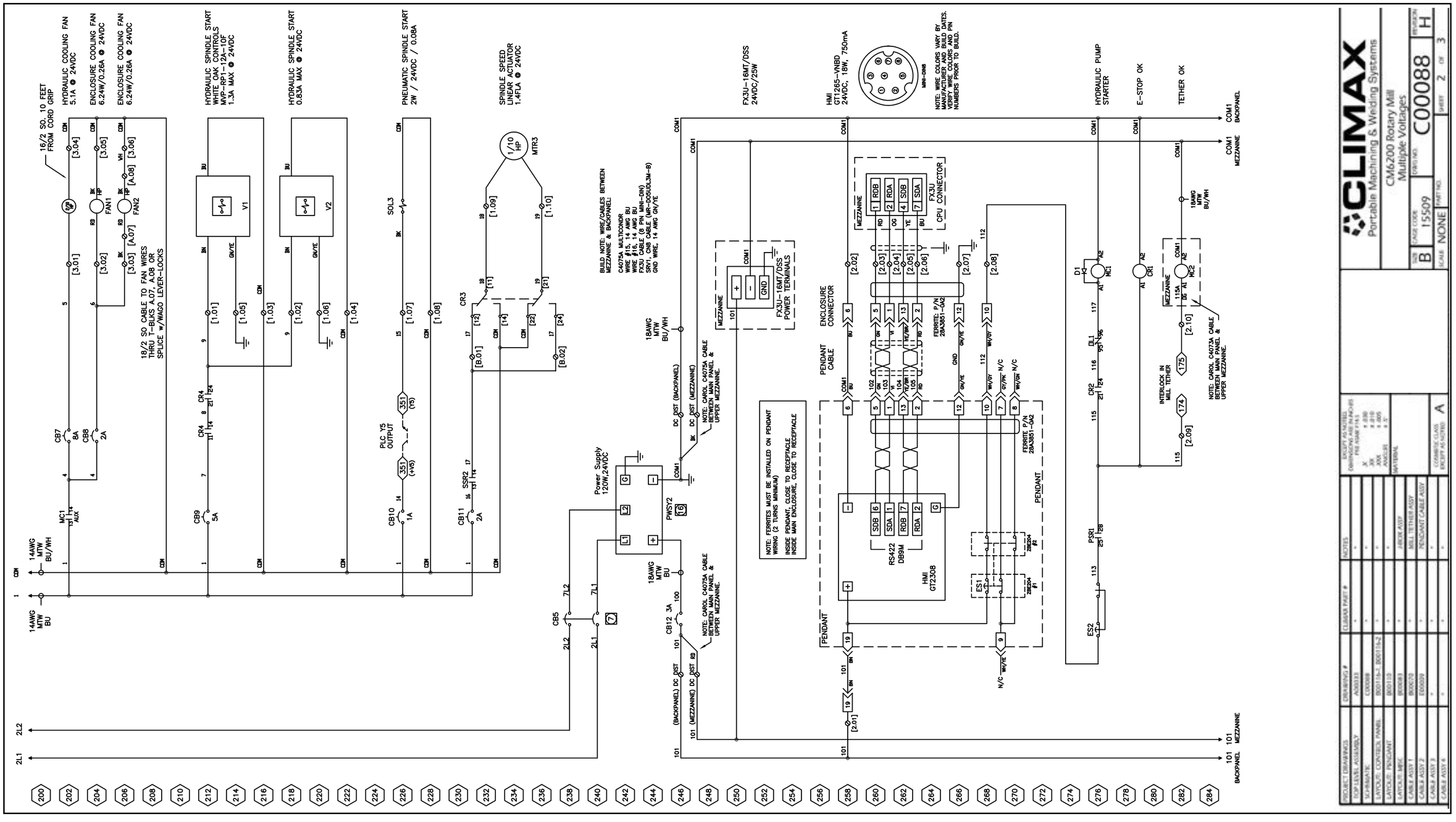

FIGURE B-9. FICHE DE MONTAGE MR-J3 2 (P/N C00088)

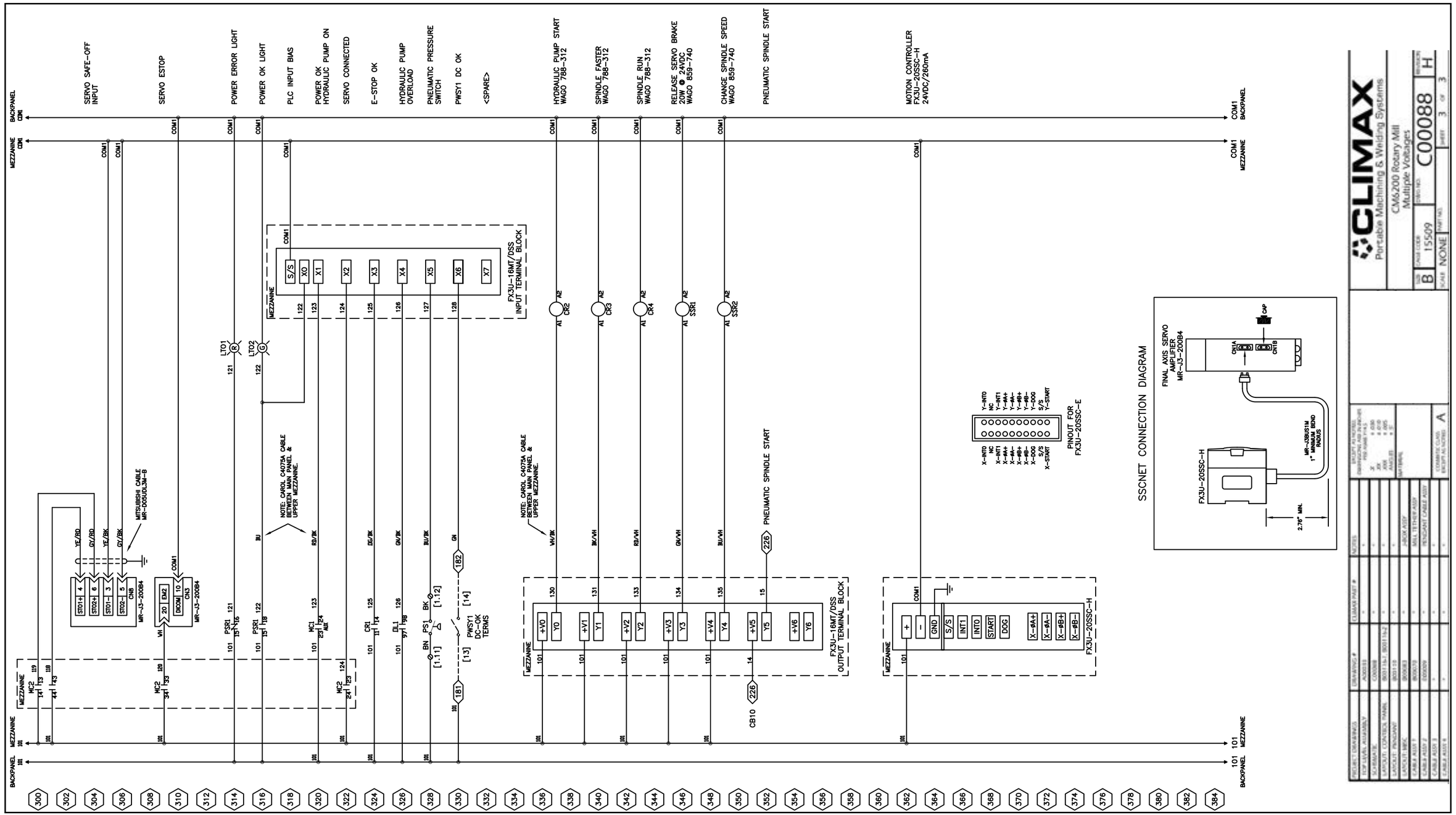

FIGURE B-10. FICHE DE MONTAGE MR-J3 3 (P/N C00088)

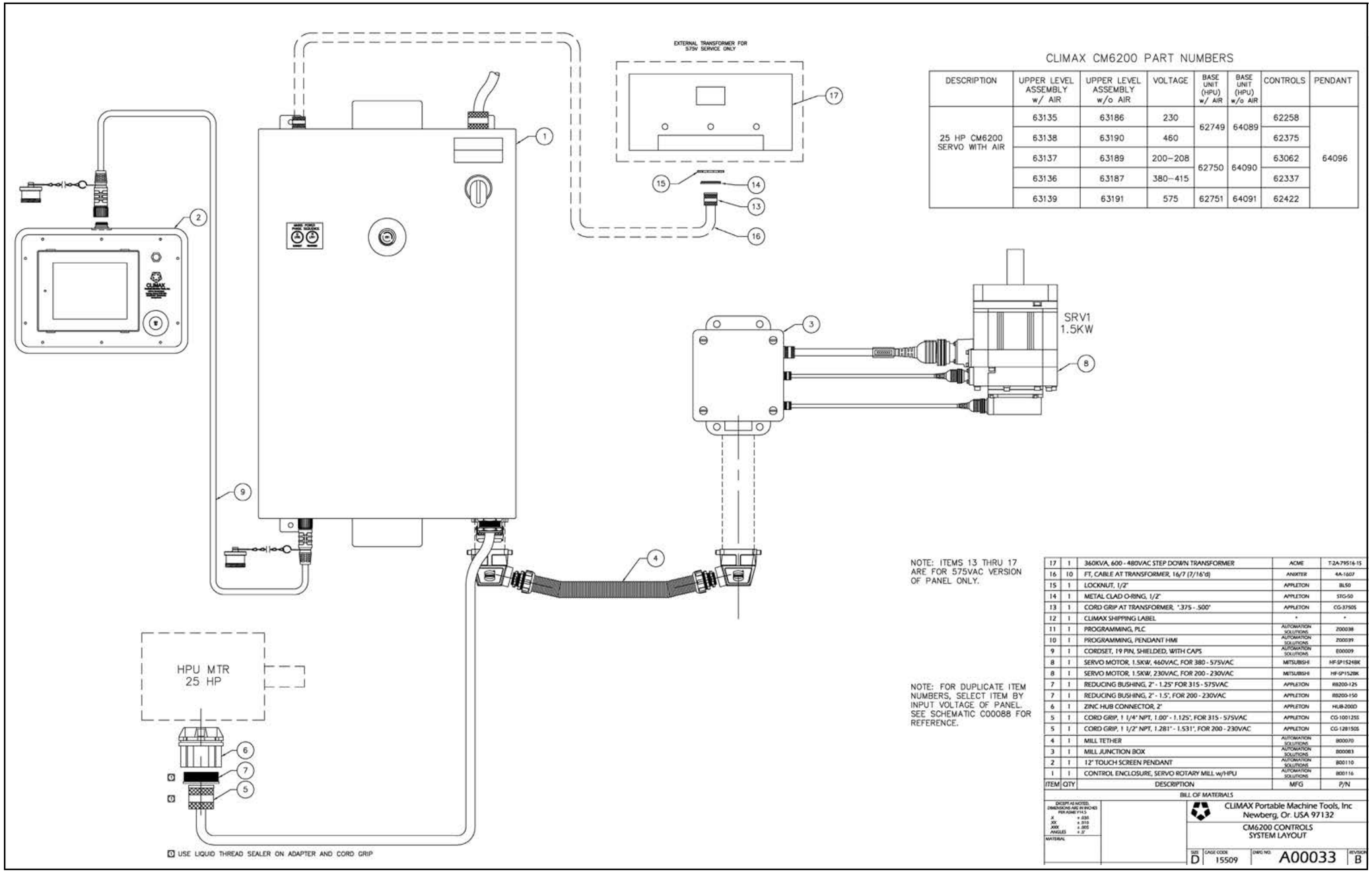

CLIMAX CM6200 PART NUMBERS

DESCRIPTION	UPPER LEVEL ASSEMBLY w/ AIR	UPPER LEVEL ASSEMBLY w/o AIR	VOLTAGE	BASE UNIT (HPU) w/ AIR	BASE UNIT (HPU) w/o AIR	CONTROLS	PENDANT
25 HP CM6200 SERVO WITH AIR	63135	63186	230	62749	64089	62258	64096
	63138	63190	460			62375	
	63137	63189	200–208	62750	64090	63062	
	63136	63187	380–415			62337	
	63139	63191	575	62751	64091	62422	

ITEM	QTY	DESCRIPTION	MFG	P/N
17	1	360KVA, 600 - 480VAC STEP DOWN TRANSFORMER	ACME	T-2A-79516-15
16	10	FT, CABLE AT TRANSFORMER, 16/7 (7/16'd)	ANIXTER	4A-1607
15	1	LOCKNUT, 1/2"	APPLETON	BL50
14	1	METAL CLAD O-RING, 1/2"	APPLETON	STG-50
13	1	CORD GRIP AT TRANSFORMER, ".375 - .500"	APPLETON	CG-3750S
12	1	CLIMAX SHIPPING LABEL	*	*
11	1	PROGRAMMING, PLC	AUTOMATION SOLUTIONS	Z00038
10	1	PROGRAMMING, PENDANT HMI	AUTOMATION SOLUTIONS	Z00039
9	1	CORDSET, 19 PIN, SHIELDED, WITH CAPS	AUTOMATION SOLUTIONS	E00009
8	1	SERVO MOTOR, 1.5KW, 460VAC, FOR 380 - 575VAC	MITSUBISHI	HF-SP1524BK
8	1	SERVO MOTOR, 1.5KW, 230VAC, FOR 200 - 230VAC	MITSUBISHI	HF-SP1528K
7	1	REDUCING BUSHING, 2" - 1.25" FOR 315 - 575VAC	APPLETON	RB200-125
7	1	REDUCING BUSHING, 2" - 1.5", FOR 200 - 230VAC	APPLETON	RB200-150
6	1	ZINC HUB CONNECTOR, 2"	APPLETON	HUB-200D
5	1	CORD GRIP, 1 1/4" NPT, 1.00" - 1.125", FOR 315 - 575VAC	APPLETON	CG-1001255
5	1	CORD GRIP, 1 1/2" NPT, 1.281" - 1.531", FOR 200 - 230VAC	APPLETON	CG-1281505
4	1	MILL TETHER	AUTOMATION SOLUTIONS	B00070
3	1	MILL JUNCTION BOX	AUTOMATION SOLUTIONS	B00083
2	1	12" TOUCH SCREEN PENDANT	AUTOMATION SOLUTIONS	B00110
1	1	CONTROL ENCLOSURE, SERVO ROTARY MILL w/HPU	AUTOMATION SOLUTIONS	B00116

FIGURE B-11. DISPOSITION MR-J4 (P/N A00093)

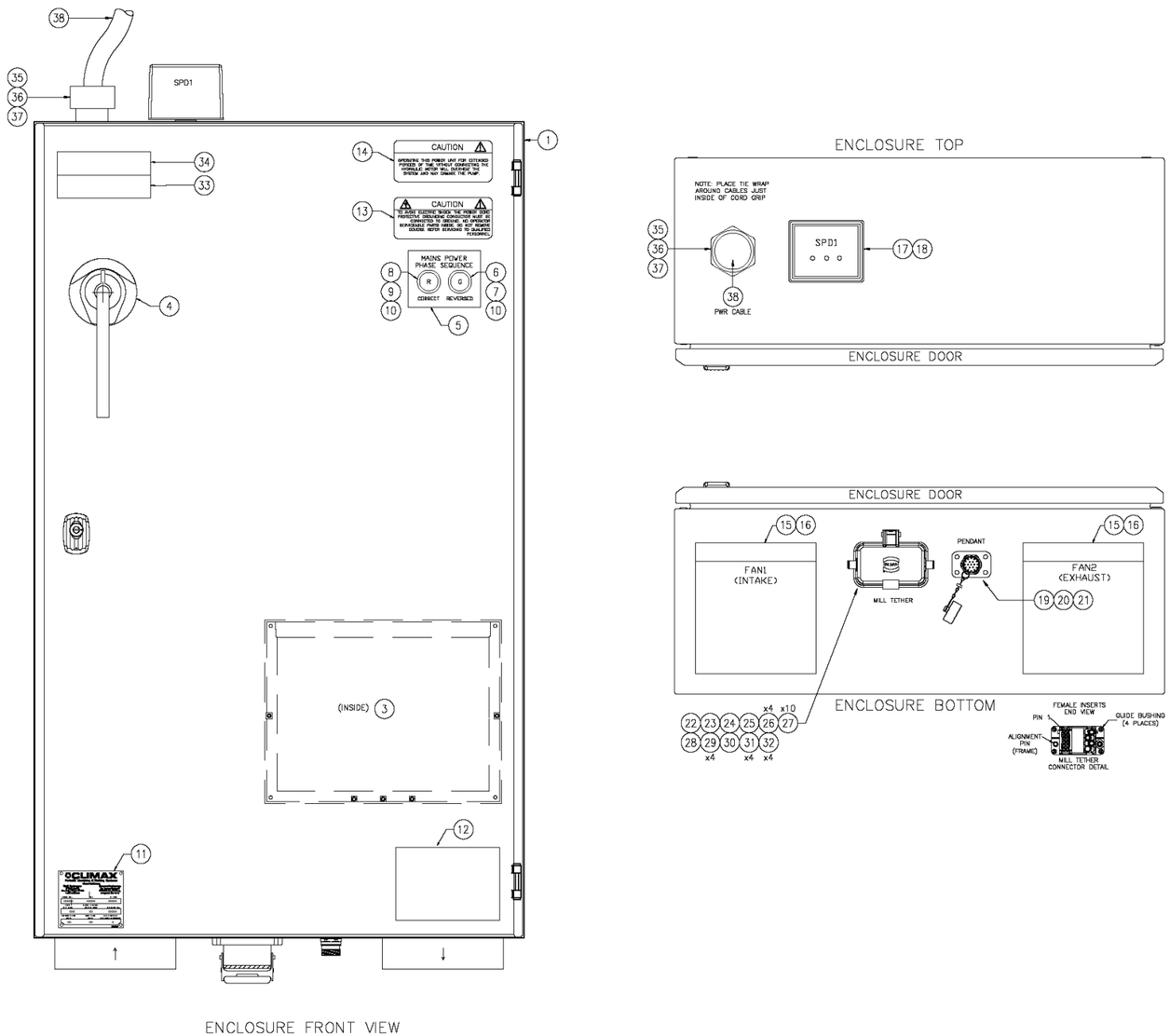

ITEM	QTY	DESCRIPTION	MFG	P/N
38	11	FT, PORTABLE POWER CORD, 8/4, TYPE W/ FOR 460-575VAC	ANIXTER	SB-0804C
38	11	FT, PORTABLE POWER CORD, 4/4, TYPE W/ FOR 208-240VAC	ANIXTER	SB-0404C
37	1	SEALING GASKET, 1-1/4", FOR 380-460VAC	APPLETON	STG-125
37	1	SEALING GASKET, 1-1/2", FOR 208-240VAC	APPLETON	STG-150
36	1	LOCKNUT, 1-1/4", FOR 380-460VAC	APPLETON	BL125
36	1	LOCKNUT, 1-1/2", FOR 208-240VAC	APPLETON	BL150
35	1	CORD GRIP, 1-1/4", MAIN POWER, FOR 380-460VAC	APPLETON	CG-100125B
35	1	CORD GRIP, 1-1/2", MAIN POWER, FOR 208-240VAC	APPLETON	CG-128150B
34	1	575V LABEL - 4.5 X 1.125	MCMASTER	58947922
34	1	460V LABEL - 4.5 X 1.125	MCMASTER	58947862
34	1	380V LABEL - 4.5 X 1.125	MCMASTER	58947912
34	1	230V LABEL - 4.5 X 1.125	MCMASTER	58947832
34	1	208V LABEL - 4.5 X 1.125	MCMASTER	58947842
33	1	THREE PHASE LABEL - 4.5 X 1.125	MCMASTER	58947-4
32	4	GUIDE BUSHINGS	HARTING	09 14 000 9909
31	4	HAN MODULAR CONNECTOR, CONTACT, FEMALE, AWG 18	HARTING	09 15 000 6262
30	1	HAN MODULAR CONNECTOR, FEMALE INSERT, 7 PIN	HARTING	09 14 007 3101
29	4	HAN MODULAR CONNECTOR, CONTACT, FEMALE, AWG 14	HARTING	09 32 000 6205
28	1	HAN MODULAR CONNECTOR, HOUSING, BULKHEAD MOUNT	HARTING	09 30 010 0318
27	10	HAN MODULAR CONNECTOR, CONTACT, FEMALE AWG 26-22	HARTING	09 15 000 6224
26	4	HAN MODULAR CONNECTOR, CONTACT, FEMALE AWG 16	HARTING	09 15 000 6201
25	1	HAN MODULAR CONNECTOR, FEMALE INSERT, 12 PIN	HARTING	09 14 012 3101
24	1	HAN MODULAR CONECTOR, FRAME FOR 3 MODULES	HARTING	09 14 010 0303
23	1	HAN MODULAR CONNECTOR, FEMALE INSERT, 4 PINS	HARTING	09 14 004 3141
22	1	HAN MODULAR CONNECTOR, DUMMY MODULE	HARTING	09 14 000 9950
21	1	CLOSURE CAP, PENDANT CONNECTOR	TURCK	CK-CC
20	1	SUPPORT PLATE FOR CKM CMS SUPPORT PLATE	AUTOMATION SOLUTIONS	H00052
19	1	CONNECTOR, PENDANT, 19 PIN, FEMALE	TURCK	CKFD 19-19-1
18	1	NEOPRENE SEALING GASKET, 1/2"	APPLETON	STG-50
17	1	SURGE ARRESTER & POWER CONDITIONER	SCHNEIDER	SDEA3650
16	2	EXHAUST	HABWA	3142-0148-00-07
15	2	FANS, 24VDC	ORION	OD1238-24HB
14	1	15396 - LABEL, CAUTION HYDRAULIC OVERHEAT	CLIMAX	15396
13	1	37576 - CAUTION LABEL	CLIMAX	N00042
12	1	ARC FLASH WARNING LABEL	SAFETYSIGN	JS543-JF
11	1	39125 - NAMEPLATE FOR ELECTRICAL PANELS	AUTOMATION SOLUTIONS	N00002
10	2	MOUNTING BASE	TELEMECANIQUE	ZB4BZ009
9	1	LIGHT MODULE, RED, 24V-120V	SCHNEIDER	ZBVB64
8	1	PILOT LIGHT HEAD, RED	SCHNEIDER	ZB4BV043
7	1	LIGHT MODULE, GREEN, 24V-120V	SCHNEIDER	ZBVB63
6	1	PILOT LIGHT HEAD, GREEN	SCHNEIDER	ZB4BV033
5	1	PHASE SEQUENCE LEGEND PLATE	AUTOMATION SOLUTIONS	F00011
4	1	MAIN DISCONNECT NEMA4 HANDLE ASSY	SCHNEIDER	9421LH4GRY
3	1	PRINT POCKET, A4 (INSIDE FRONT DOOR)	SCHNEIDER	NSYDPA4
2	1	DOOR RETAINER	SCHNEIDER	NSYAEDRC3T
1	1	ENCLOSURE, 36"X24"X12"	SCHNEIDER	NSY33DC10625

BILL OF MATERIALS

Climax P/N CHART		
VOLTAGE	Control Panel	Ref#
575V	90281	60-03000
380-460V	90267/90269	60-02993
208-230V	90296	60-02995

PROJECT DRAWINGS	DRAWING #	CLIMAX PART #	NOTES
TOP LEVEL ASSEMBLY	A00093	*	*
SCHEMATIC	C00526	*	*
LAYOUT: CONTROL PANEL	B00394	SEE CHART	*
LAYOUT: PENDANT	B00110	90858	*
LAYOUT: MISC	B00083	*	J-BOX ASSY
CABLE ASSY 1	B00070	55608	MILL TETHER ASSY
CABLE ASSY 2	*	*	*
ENCLOSURE TEMPLATE			*

EXCEPT AS NOTED, DIMENSIONS ARE IN INCHES PER ASME Y14.5
.X ± .010
.XX ± .010
.XXX ± .005
ANGLES ± 5°
MATERIAL
COSMETIC CLASS EXCEPT AS NOTED A

ADDITIONAL INFORMATION AND SPECIFICATIONS REQUIRED TO MANUFACTURE THE PART ARE PROVIDED IN CLIMAX SPEC. P100

DRAWN RG DATE 5/26/18
CHECKED DATE
APPROVED: DATE
CAD/CAM STD 4

CLIMAX
Portable Machining & Welding Systems

CM6200 w/ IQAN PUMP CONTROL
MULTI VOLTAGES

SIZE B | CAGE CODE 15509 | DWG NO. B00394 | REVISION A
SCALE 1:1 | P/N SEE CHART | SHEET 1 OF 2

FIGURE B-12. EXTÉRIEUR DU PANNEAU DE COMMANDE MR-J4 (P/N B000394)

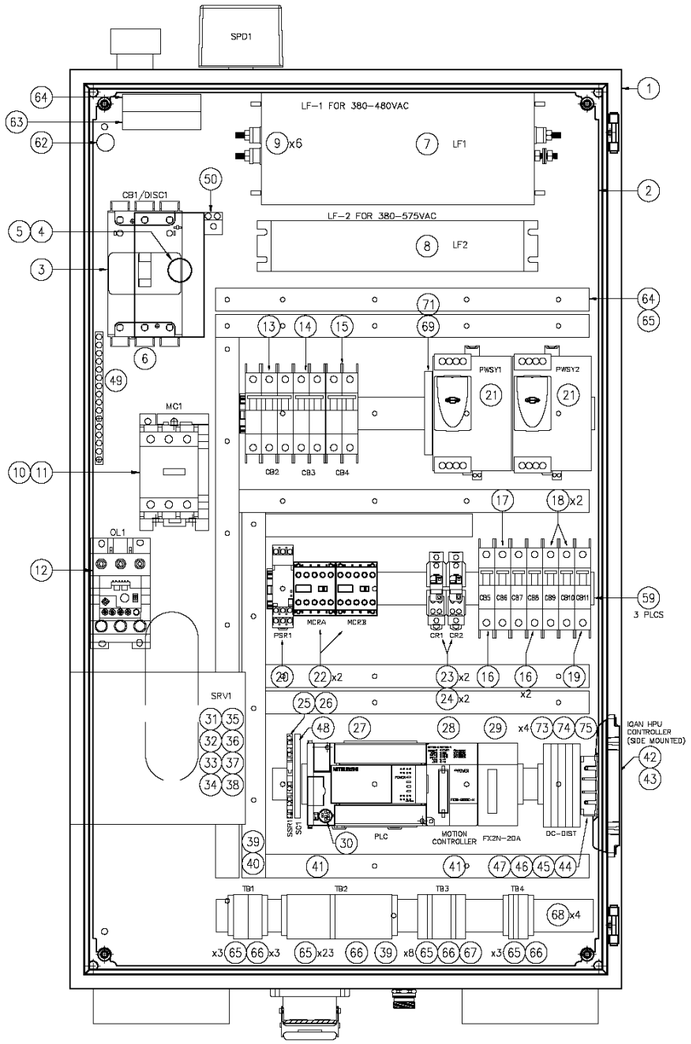

CONTROLS ENCLOSURE
(INSIDE VIEW)

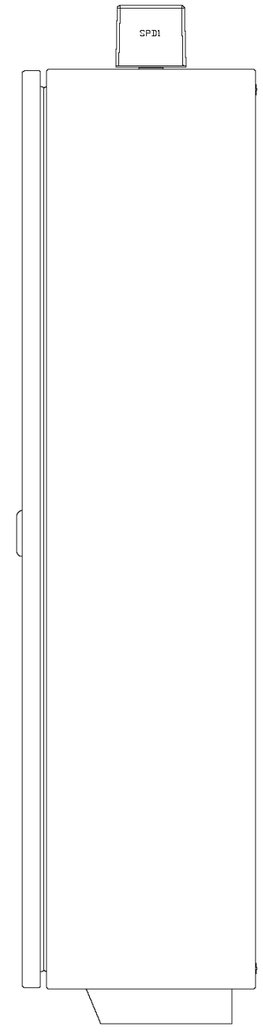

RIGHT SIDE VIEW

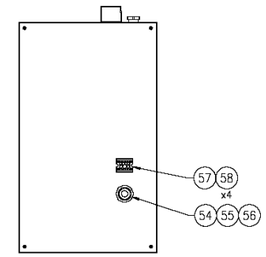

BACK VIEW
(¼ SCALE)

ITEM	QTY	DESCRIPTION	MFG	P/N
78	4	1/4-20 HEX NUT	McMASTER	90473A029
77	4	1/4-20 KEPS NUT	McMASTER	90675A029
76	2	1/4-20 x 3/4" GND BOLT	McMASTER	91309A540
75	1	JUMPER, 4 PIN	WAGO	2002-404
74	1	JUMPER, 3 PIN	WAGO	2002-403
73	3	JUMPER, 2 PIN	WAGO	2002-402
72	18	T-BLOCK END STOPS	WAGO	249-116
71	3	END PLATE, ORANGE	WAGO	2002-1492
70	1	T-BLOCK, 4 CONDR, GRN/YE	WAGO	2002-1407
69	5	T-BLOCK, 4 CONDR, GRAY	WAGO	2002-1401
68	4	END PLATE, ORN	WAGO	2002-1292
67	1	TERM BLOCK, 5mm, GREEN/YELLOW, GROUND	WAGO	2002-1207
66	6	TERM BLOCK, 5mm, GRAY	WAGO	2002-1201
65	37	TERM BLOCK, 5mm, BLUE	WAGO	2002-1204
64	1	460V LABEL - 2.25 X 5	McMASTER	58947B63
64	1	380V LABEL - 2.25 X 5	McMASTER	58947B93
64	1	230V LABEL - 2.25 X 5	McMASTER	58947B33
64	1	208V LABEL - 2.25 X 5	McMASTER	58947B43
63	1	THREE PHASE LABEL - 2.25 X 5	McMASTER	58947G
62	1	PROTECTIVE EARTH LABEL	PANDUIT	PRESS-A-PE
61	1	WIRE DUCT COVER	MULTIPLE	MULTIPLE
60	1	WIRE DUCT	MULTIPLE	MULTIPLE
59	1	DINRAIL	MULTIPLE	MULTIPLE

BILL OF MATERIALS

ITEM	QTY	DESCRIPTION	MFG	P/N
58	4	10-32 x5/8" BHCS, GLAND MOUNTINGSCREW	McMASTER	92949A267
57	1	CABLE GLAND	ICOTEK	KEL-DPZ-817 GY
56	1	SEALING GASKET, 1-1/4"	APPLETON	STG-125
55	1	LOCKNUT, 1-1/4"	APPLETON	EL125
54	1	PVC CONNECTOR, 1-1/4", BLACK	HEYCO	8638
53	1	GROUND LUG	MULTIPLE	MULTIPLE
52	1	GROUND BAR	EATON	GBK14
48	1	SIGNAL CONDITIONER	WAGO	857-412
47	2	TERMINAL, 14AWG	Yazaki	7116-4152-02
46	23	TERMINAL	MOLEX	33467-0024
45	1	CONNECTOR COVER	MOLEX	34505-0003
44	1	DUAL ROW RT ANGLE HEADER	MOLEX	34822-0013
43	1	IQAN HPU CONTROLLER ID TAG	PARKER	20085110
42	1	IQAN HPU CONTROLLER	PARKER	MC41
41	2	FERRITE, 122 OHMS 100MHz	LAIRD	28B0870-100
40	1	SMALL FERRITE, SPLIT/SNAP-ON, 240 OHMS 100MHZ	LAIRD	28A0640-0A2
39	2	LARGE FERRITE, SPLIT/SNAP-ON, 260 OHMS 100MHz	LAIRD	28A3851-0A2
38	1	CN3 CONNECTOR	3M	10120-3000PE
37	1	CN3 CONNECTOR	3M	10320-52F0-008
36	1	SERVO SAFETY CABLE PIGTAIL	MITSUBISHI	MR-D05UDL3M-B
35	3	FT, ENCODER CABLE	TUROK	RF51616
34	1	ENCODER CONNECTOR KIT	MITSUBISHI	MR-J3SCN8
33	1	SSCNET III CABLE, 1 METER	MITSUBISHI	MR-J3BUS1M
32	1	SERVO AMP, 2KW, 400V FOR 380 - 575VAC	MITSUBISHI	MR-J4-200B4-RJ
31	1	SERVO AMP, 2KW, 200V FOR 200 - 230VAC	MITSUBISHI	MR-J4-200B-RJ
30	1	8 PIN MINI-DIN 8 CABLE	L-COM	DX238MM-15
29	1	DIGITAL TO ANALOG MODULE	MITSUBISHI	FX2N-2DA
28	1	FX3U SSCNENT 2 AXIS POSITIONING MODULE	MITSUBISHI	FX3U-20SSC-H
27	1	PLC BASE, 8 IN/ 8 OUT	MITSUBISHI	FX3U-16MT/DS
26	1	SSR1: SOLID STATE RELAY	SCHNEIDER	SSL1D038D
25	1	SSR1: RELAY BASE	SCHNEIDER	SSL2BA1
24	2	CR1, CR2: RELAY SOCKET	SCHNEIDER	RPZF1
23	2	CR1, CR2: RELAY, 1 C/O	SCHNEIDER	RPM12BD
22	2	MCRA, MCRB: RELAY, 3NO, 1NC, 24VDC COIL	SCHNEIDER	CA3KN40BD
21	2	POWER SUPPLY, 24VDC, 10A	SCHNEIDER	ABL8RPS24100
20	1	PSR1: PHASE SEQUENCE RELAY	SCHNEIDER	RM22TG20
19	1	CB11, CIRCUIT BREAKER, 1A, 1 POLE	SCHNEIDER	60101
18	2	CB9, CB10: CIRCUIT BREAKER, 10A, 1 POLE	SCHNEIDER	60110
17	1	CB6, CIRCUIT BREAKER, 9A, 1 POLE	SCHNEIDER	60109
16	3	CB5, CB7, CB8: CIRCUIT BREAKER, 2A, 1 POLE	SCHNEIDER	60103
15	1	CB4: CIRCUIT BREAKER, 10A, 2 POLE, FOR 460VAC	SCHNEIDER	MGN61319
14	1	CB3: CIRCUIT BREAKER, 15A, 3 POLE, FOR 380-575VAC	SCHNEIDER	MGN61331
14	1	CB3, CIRCUIT BREAKER, 20A, 3 POLE, FOR 200-230VAC	SCHNEIDER	60180
13	1	CB2: CIRCUIT BREAKER, 1A, 3 POLE	SCHNEIDER	MGN61323
12	1	OL1: ELECTRONIC OVERLOAD RELAY	SCHNEIDER	LR9D1110S
11	1	MC1: AUX CONTACTS	SCHNEIDER	LADN20
10	1	MC1: CONTACTOR, 40A 24VDC, FOR 380-575VAC	SCHNEIDER	LC1D40BD
10	1	MC1: CONTACTOR, 80A 24VDC, FOR 208-240VAC	SCHNEIDER	LC1D80BD
9	6	TERMINAL INSULATORS, BLACK	VTE	800N5V14
8	1	LF2, LINE FILTER, 15A, FOR 575VAC	SCHAFFNER	FN2580L-16-29
8	1	LF2, LINE FILTER, 15A, FOR 380 - 460VAC	SCHAFFNER	FN2580L-16-29
7A	1	LF1, MOUNTING KIT, FOR 380 - 460VAC	CORCOM	AA465
7	1	LF1, LINE FILTER, 60A, FOR 380 - 460VAC	CORCOM	60AVT6-GF7477
7	1	LF1, LINE FILTER, 75A FOR 200 - 230VAC	SCHAFFNER	FN2580L-75-34
6	1	DISTRIBUTION SET, 3/6, 14-6AWG	SCHNEIDER	PDC6BD6
5	1	DISC1: DISCONNECT SHAFT	SCHNEIDER	9421LS8
4	1	DISC1: MAIN DISCONNECT OPERATING MECHANISM	SCHNEIDER	9421LB7
3	1	CB1: CIRCUIT BREAKER, 35A, 3 POLE, FOR 575VAC	SCHNEIDER	BDL36035
3	1	CB1: CIRCUIT BREAKER, 60A, 3 POLE, FOR 380-460VAC	SCHNEIDER	BDL36060
3	1	CB1: CIRCUIT BREAKER, 90A, 3 POLE, FOR 230-240VAC	SCHNEIDER	BDL36090
3	1	CB1: CIRCUIT BREAKER, 110A, 3 POLE, FOR 208VAC	SCHNEIDER	BDL36110
2	1	BACK PANEL	AUTOMATION SOLUTIONS	H99603
1	1	ENCLOSURE, 36" X 24" X 12"	SCHNEIDER	NSYS3DC10625

BILL OF MATERIALS

PLC PROGRAM #Z00493
HMI PROGRAM #Z00494

Climax P/N CHART		
VOLTAGE	Control Panel	Ref#
575V	90281	60-03000
380-460V	90267/90269	60-02993
208-230V	90296	60-02995

PROJECT DRAWINGS	DRAWING #	CLIMAX PART #	NOTES
TOP LEVEL ASSEMBLY	A00093	*	*
SCHEMATIC	C00526	*	*
LAYOUT: CONTROL PANEL	B00394	SEE CHART	*
LAYOUT: PENDANT	B00110	90858	*
LAYOUT: MISC	B00083	*	J-BOX ASSY
CABLE ASSY 1	B00070	55608	MILL TETHER ASSY
CABLE ASSY 2	*	*	*

EXCEPT AS NOTED DIMENSIONS ARE IN INCHES PER ASME Y14.5
.X ±.030
.XX ±.010
.XXX ±.005
ANGLES ±5°
MATERIAL

ADDITIONAL INFORMATION AND SPECIFICATIONS REQUIRED TO MANUFACTURE THE PART ARE PROVIDED IN CLIMAX SPEC. P100
DRAWN RG DATE 5/26/18
CHECKED DATE
APPROVED DATE

CLIMAX
Portable Machining & Welding Systems
CM6200 w/ IQAN PUMP CONTROL
MULTI VOLTAGES
SIZE B | CAGE CODE 15509 | DWG NO. B00394 | REVISION A

FIGURE B-13. INTÉRIEUR DU PANNEAU DE COMMANDE MR-J4 (P/N B00394)

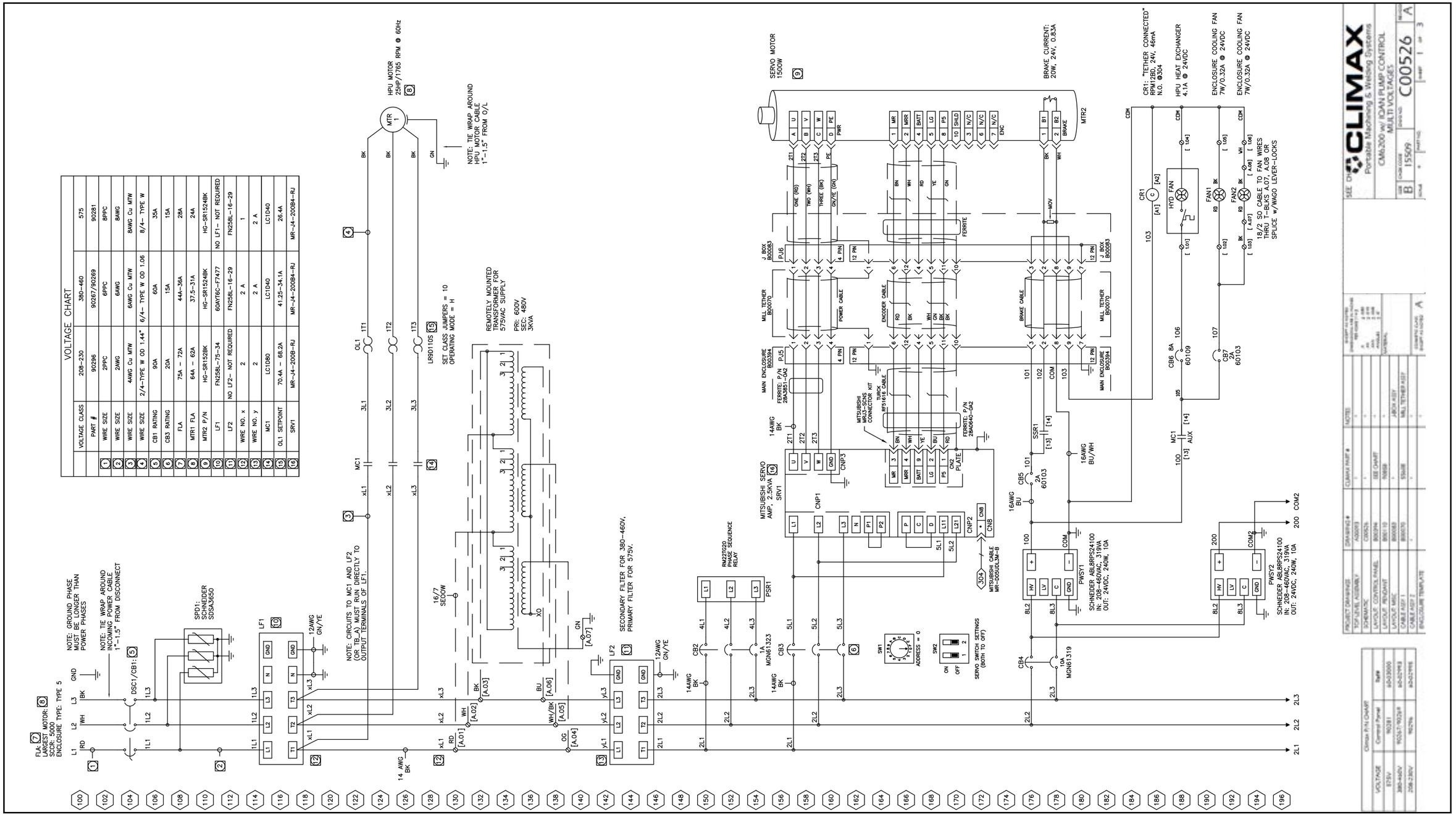

FIGURE B-14. FICHE SCHÉMATIQUE MR-J4 1 (P/N C00526)

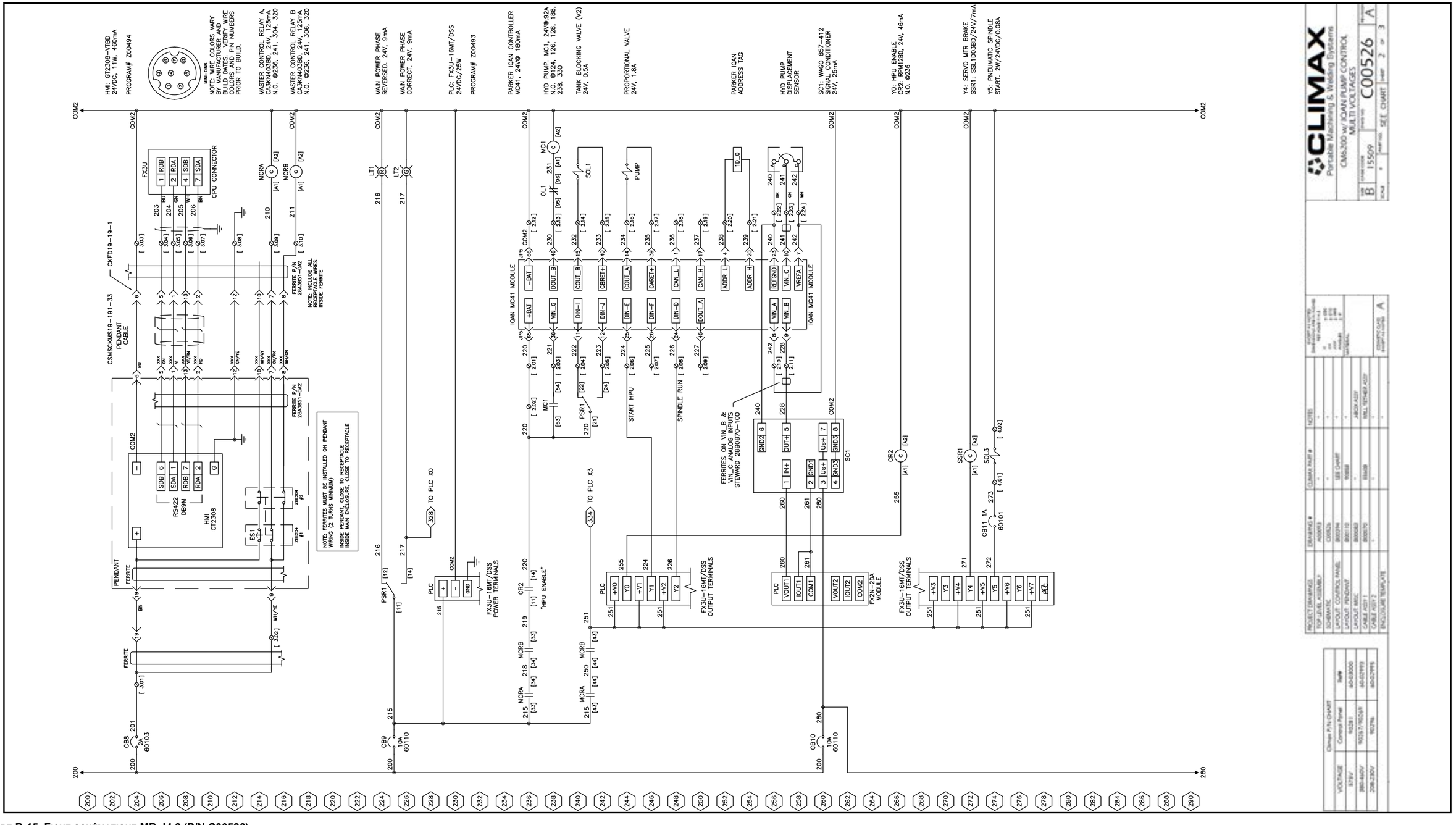

FIGURE B-15. FICHE SCHÉMATIQUE MR-J4 2 (P/N C00526)

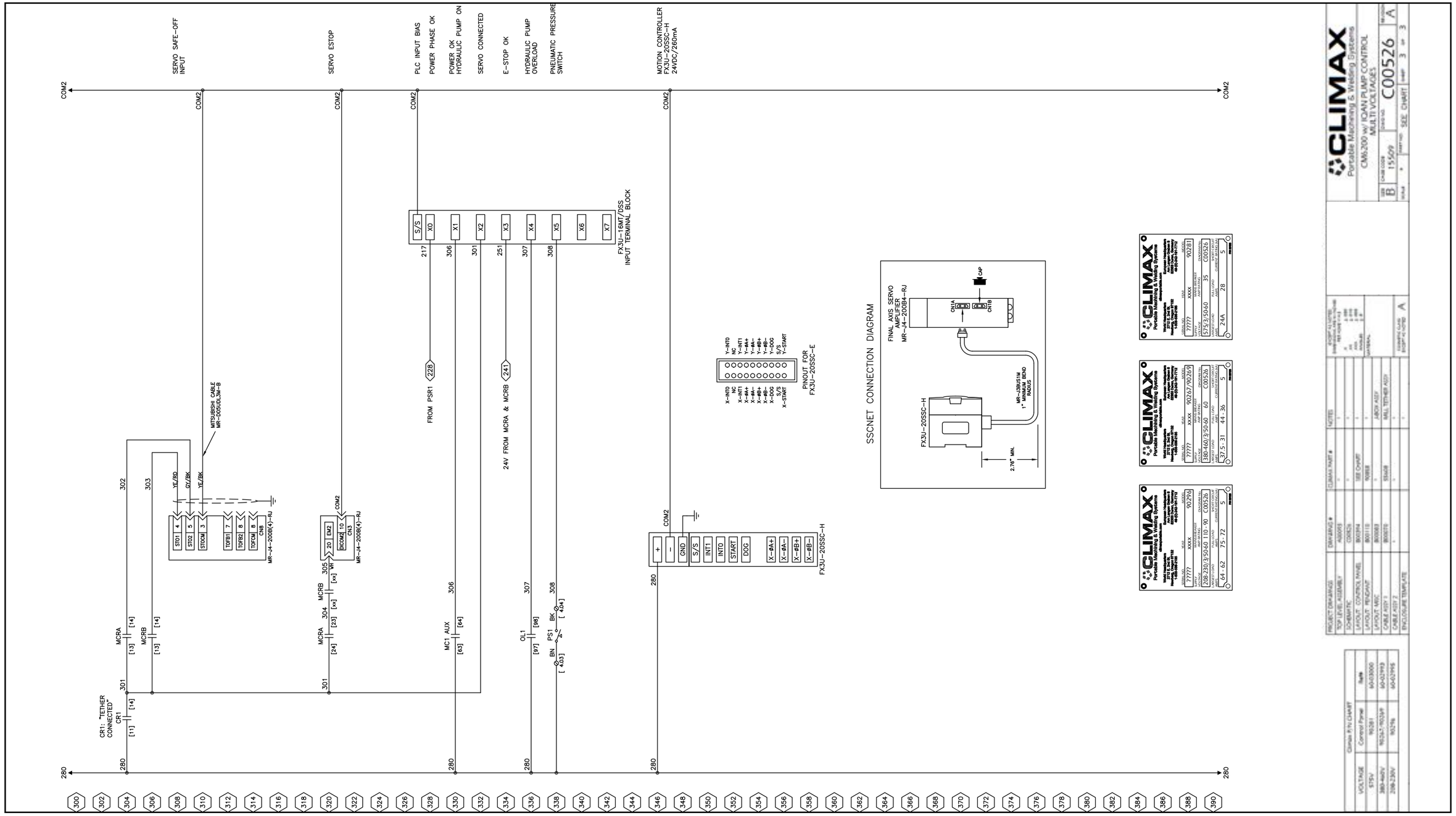

FIGURE B-16. FICHE SCHÉMATIQUE MR-J4 3 (P/N C00526)

Cette page est laissée vierge intentionnellement

APPENDIX C SDS

Contactez CLIMAX pour obtenir les fiches de données de sécurité actuelles.

Cette page est laissée vierge intentionnellement

APPENDIX D MANUEL DU SERVOAMPLIFICATEUR MR-J4

Pour tout problème avec la boîte de jonction du servomoteur MR-J4, consultez les pages suivantes.

Cette page est laissée vierge intentionnellement

1 TROUBLESHOOTING FOR SERVO AMPLIFIER (DRIVE UNIT)

Point

- As soon as an alarm occurs, turn SON (Servo-on) off and interrupt the power.
- [AL. 37 Parameter error] and warnings (except [AL. F0 Tough drive warning]) are not recorded in the alarm history.
- [AL. 8D.1 CC-Link IE communication error 1] and [AL. 8D.2 CC-Link IE communication error 2] are not recorded in the alarm history. For MR-J4-_GF_(-RJ), these alarms are recorded by setting [Pr. PN06] to "_ _ _ 1".

When an error occurs during operation, the corresponding alarm or warning is displayed.

When an alarm occurs, ALM will turn off. Refer to the following and take the appropriate action.

☞ Page 30 Remedies for alarms

When an warning is displayed, refer to the following and take the appropriate action.

☞ Page 103 Remedies for warnings

1.1 Explanation for the lists

No./Name/Detail No./Detail name

Indicates each No./Name/Detail No./Detail name of alarms or warnings.

Stop method

For the alarms and warnings in which "SD" is written in the stop method column, the servo motor stops with the dynamic brake after forced stop deceleration. For the alarms and warnings in which "DB" or "EDB" is written in the stop method column, the servo motor stops with the dynamic brake without forced stop deceleration.

Alarm deactivation

After its cause has been removed, the alarm can be deactivated in any of the methods marked ○ in the alarm deactivation column. Warnings are automatically canceled after the cause of occurrence is removed. Alarms are deactivated with alarm reset, CPU reset, or cycling the power.

■MR-J4-_A_(-RJ)/MR-J4-DU_A_(-RJ)

Alarm deactivation	Explanation
Alarm reset	1. Turning on RES (Reset) with input device 2. Pushing the "SET" button while the display of the servo amplifier is the current alarm display status 3. Click "Occurring Alarm Reset" in the "Alarm Display" window of MR Configurator2
Cycling the power	Turning the power off and then turning it on again.

■MR-J4-_B_(-RJ010)/MR-J4W_-_B/MR-J4-DU_B_(-RJ)/MR-J4-_GF_(-RJ)

Alarm deactivation	Explanation
Alarm reset	1. Reset command from controller 2. Click "Occurring Alarm Reset" in the "Alarm Display" window of MR Configurator2
CPU reset	Resetting the controller itself
Cycling the power	Turning the power off and then turning it on again.

Processing system (only for MR-J4W_-_B_)

Processing system of alarms is as follows.

Each axis: Alarm is detected for each axis.

Common: Alarm is detected as the whole servo amplifier.

Stop system (only for MR-J4W_-_B_)

This means target axis to stop when the alarm occurs.
Each axis: Only alarming axis will stop.
All axes: All axes will stop.

Alarm code (only MR-J4-_A_(-RJ)/MR-J4-DU_A_(-RJ))

To output alarm codes, set [Pr. PD34] to "_ _ _ 1" when using an MR-J4-_A_(-RJ)/MR-J4-DU_A_(-RJ). Alarm codes are outputted by on/off of bit 0 to bit 2. Warnings ([AL. 90] to [AL. F3]) do not have alarm codes. The alarm codes in the following table will be outputted when they occur. The alarm codes will not be outputted in normal condition.
When using an MR-D01 extension IO unit, you can output alarm codes by setting [Pr. Po12] to "_ _ _ 1". Alarm codes are outputted by on/off of bit 0 to bit 3.

1.2 Alarm list

Alarm		Detail		Stop method *2*3	Alarm deactivation			Processing system *9	Stop system *9	Alarm code *8			
No.	Name	No.	Name		Alarm reset	CPU reset	Cycling the power			ACD3 (Bit 3)	ACD2 (Bit 2)	ACD1 (Bit 1)	ACD0 (Bit 0)
10	Undervoltage	10.1	Voltage drop in the control circuit power	EDB	○	○	○	Common	All axes	0	0	1	0
		10.2	Voltage drop in the main circuit power	SD	○	○	○	Common	All axes				
11	Switch setting error	11.1	Axis number setting error/ Station number setting error	DB	—	—	○	Common	All axes	—	—	—	—
		11.2	Disabling control axis setting error	DB	—	—	○	Common	All axes	—	—	—	—
12	Memory error 1 (RAM)	12.1	RAM error 1	DB	—	—	○	Common	All axes	0	0	0	0
		12.2	RAM error 2	DB	—	—	○	Common	All axes				
		12.3	RAM error 3	DB	—	—	○	Common	All axes				
		12.4	RAM error 4	DB	—	—	○	Common	All axes				
		12.5	RAM error 5	DB	—	—	○	Common	All axes				
		12.6	RAM error 6	DB	—	—	○	—	—	—	—	—	—
13	Clock error	13.1	Clock error 1	DB	—	—	○	Common	All axes	0	0	0	0
		13.2	Clock error 2	DB	—	—	○	Common	All axes				
		13.3	Clock error 3	DB	—	—	○	—	—	—	—	—	—
14	Control process error	14.1	Control process error 1	DB	—	—	○	Common	All axes	0	0	0	0
		14.2	Control process error 2	DB	—	—	○	Common	All axes				
		14.3	Control process error 3	DB	—	—	○	Common	All axes				
		14.4	Control process error 4	DB	—	—	○	Common	All axes				
		14.5	Control process error 5	DB	—	—	○	Common	All axes				
		14.6	Control process error 6	DB	—	—	○	Common	All axes				
		14.7	Control process error 7	DB	—	—	○	Common	All axes				
		14.8	Control process error 8	DB	—	—	○	Common	All axes				
		14.9	Control process error 9	DB	—	—	○	Common	All axes				
		14.A	Control process error 10	DB	—	—	○	Common	All axes				
		14.B	Control process error 11	DB	—	—	○	—	—	—	—	—	—
		14.C	Control process error 12	DB	—	—	○	—	—	—	—	—	—
		14.D	Control process error 13	DB	—	—	○	—	—	—	—	—	—

Alarm		Detail		Stop method *2*3	Alarm deactivation			Processing system *9	Stop system *9	Alarm code *8			
No.	Name	No.	Name		Alarm reset	CPU reset	Cycling the power			ACD3 (Bit 3)	ACD2 (Bit 2)	ACD1 (Bit 1)	ACD0 (Bit 0)
15	Memory error 2 (EEP-ROM)	15.1	EEP-ROM error at power on	DB	—	—	○	Common	All axes	0	0	0	0
		15.2	EEP-ROM error during operation	DB	—	—	○	Common	All axes				
		15.4	Home position information read error	DB	—	—	○	—	—				

Alarm		Detail		Stop method *2*3	Alarm deactivation			Processing system *9	Stop system *9	Alarm code *8			
No.	Name	No.	Name		Alarm reset	CPU reset	Cycling the power			ACD3 (Bit 3)	ACD2 (Bit 2)	ACD1 (Bit 1)	ACD0 (Bit 0)
16	Encoder initial communication error 1	16.1	Encoder initial communication - Receive data error 1	DB	—	—	○	Each axis	Each axis	0	1	1	0
		16.2	Encoder initial communication - Receive data error 2	DB	—	—	○	Each axis	Each axis				
		16.3	Encoder initial communication - Receive data error 3	DB	—	—	○	Each axis	Each axis				
		16.4	Encoder initial communication - Encoder malfunction *6	DB	—	—	○	Each axis	Each axis				
		16.5	Encoder initial communication - Transmission data error 1	DB	—	—	○	Each axis	Each axis				
		16.6	Encoder initial communication - Transmission data error 2	DB	—	—	○	Each axis	Each axis				
		16.7	Encoder initial communication - Transmission data error 3	DB	—	—	○	Each axis	Each axis				
		16.8	Encoder initial communication - Incompatible encoder *6	DB	—	—	○	Each axis	Each axis				
		16.A	Encoder initial communication - Process error 1	DB	—	—	○	Each axis	Each axis				
		16.B	Encoder initial communication - Process error 2	DB	—	—	○	Each axis	Each axis				
		16.C	Encoder initial communication - Process error 3	DB	—	—	○	Each axis	Each axis				
		16.D	Encoder initial communication - Process error 4	DB	—	—	○	Each axis	Each axis				
		16.E	Encoder initial communication - Process error 5	DB	—	—	○	Each axis	Each axis				
		16.F	Encoder initial communication - Process error 6	DB	—	—	○	Each axis	Each axis				

Alarm		Detail		Stop method *2*3	Alarm deactivation			Processing system *9	Stop system *9	Alarm code *8			
No.	Name	No.	Name		Alarm reset	CPU reset	Cycling the power			ACD3 (Bit 3)	ACD2 (Bit 2)	ACD1 (Bit 1)	ACD0 (Bit 0)
17	Board error	17.1	Board error 1	DB	—	—	○	Common	All axes	0	0	0	0
		17.3	Board error 2	DB	—	—	○	Common	All axes				
		17.4	Board error 3	DB	—	—	○	Common	All axes				
		17.5	Board error 4	DB	—	—	○	Common	All axes				
		17.6	Board error 5	DB	—	—	○	Common	All axes				
		17.7	Board error 7	DB	—	—	○	—	—				
		17.8	Board error 6 *5	EDB	—	—	○	Common	All axes				
		17.9	Board error 8	DB	—	—	○	—	—	—	—	—	—
19	Memory error 3 (Flash-ROM)	19.1	Flash-ROM error 1	DB	—	—	○	Common	All axes	0	0	0	0
		19.2	Flash-ROM error 2	DB	—	—	○	Common	All axes				
		19.3	Flash-ROM error 3	DB	—	—	○	—	—	—	—	—	—
1A	Servo motor combination error	1A.1	Servo motor combination error 1	DB	—	—	○	Each axis	Each axis	0	1	1	0
		1A.2	Servo motor control mode combination error	DB	—	—	○	Each axis	Each axis				
		1A.4	Servo motor combination error 2	DB	—	—	○	Each axis	Each axis				
1B	Converter error	1B.1	Converter unit error	DB	—	—	○	—	—	0	0	1	0
1E	Encoder initial communication error 2	1E.1	Encoder malfunction	DB	—	—	○	Each axis	Each axis	0	1	1	0
		1E.2	Load-side encoder malfunction	DB	—	—	○	Each axis	Each axis				
1F	Encoder initial communication error 3	1F.1	Incompatible encoder	DB	—	—	○	Each axis	Each axis	0	1	1	0
		1F.2	Incompatible load-side encoder	DB	—	—	○	Each axis	Each axis				

Alarm		Detail		Stop method *2*3	Alarm deactivation			Processing system *9	Stop system *9	Alarm code *8			
No.	Name	No.	Name		Alarm reset	CPU reset	Cycling the power			ACD3 (Bit 3)	ACD2 (Bit 2)	ACD1 (Bit 1)	ACD0 (Bit 0)
20	Encoder normal communication error 1	20.1	Encoder normal communication - Receive data error 1	EDB	—	—	○	Each axis	Each axis	0	1	1	0
		20.2	Encoder normal communication - Receive data error 2	EDB	—	—	○	Each axis	Each axis				
		20.3	Encoder normal communication - Receive data error 3	EDB	—	—	○	Each axis	Each axis				
		20.5	Encoder normal communication - Transmission data error 1	EDB	—	—	○	Each axis	Each axis				
		20.6	Encoder normal communication - Transmission data error 2	EDB	—	—	○	Each axis	Each axis				
		20.7	Encoder normal communication - Transmission data error 3	EDB	—	—	○	Each axis	Each axis				
		20.9	Encoder normal communication - Receive data error 4	EDB	—	—	○	Each axis	Each axis				
		20.A	Encoder normal communication - Receive data error 5	EDB	—	—	○	Each axis	Each axis				
21	Encoder normal communication error 2	21.1	Encoder data error 1	EDB	—	—	○	Each axis	Each axis	0	1	1	0
		21.2	Encoder data update error	EDB	—	—	○	Each axis	Each axis				
		21.3	Encoder data waveform error	EDB	—	—	○	Each axis	Each axis				
		21.4	Encoder non-signal error	EDB	—	—	○	Each axis	Each axis				
		21.5	Encoder hardware error 1	EDB	—	—	○	Each axis	Each axis				
		21.6	Encoder hardware error 2	EDB	—	—	○	Each axis	Each axis				
		21.9	Encoder data error 2	EDB	—	—	○	Each axis	Each axis				
24	Main circuit error	24.1	Ground fault detected by hardware detection circuit	DB	—	—	○	Each axis	All axes	1	1	0	0
		24.2	Ground fault detected by software detection function	DB	○	○	○	Each axis	All axes				

Alarm		Detail		Stop method *2*3	Alarm deactivation			Processing system *9	Stop system *9	Alarm code *8			
No.	Name	No.	Name		Alarm reset	CPU reset	Cycling the power			ACD3 (Bit 3)	ACD2 (Bit 2)	ACD1 (Bit 1)	ACD0 (Bit 0)
25	Absolute position erased	25.1	Servo motor encoder - Absolute position erased	DB	—	—	○	Each axis	Each axis	1	1	1	0
		25.2	Scale measurement encoder - Absolute position erased	DB	—	—	○	Each axis	Each axis				
27	Initial magnetic pole detection error	27.1	Initial magnetic pole detection - Abnormal termination	DB	○	—	○	Each axis	Each axis	1	1	1	0
		27.2	Initial magnetic pole detection - Time out error	DB	○	—	○	Each axis	Each axis				
		27.3	Initial magnetic pole detection - Limit switch error	DB	○	—	○	Each axis	Each axis				
		27.4	Initial magnetic pole detection - Estimated error	DB	○	—	○	Each axis	Each axis				
		27.5	Initial magnetic pole detection - Position deviation error	DB	○	—	○	Each axis	Each axis				
		27.6	Initial magnetic pole detection - Speed deviation error	DB	○	—	○	Each axis	Each axis				
		27.7	Initial magnetic pole detection - Current error	DB	○	—	○	Each axis	Each axis				
28	Linear encoder error 2	28.1	Linear encoder - Environment error	EDB	—	—	○	Each axis	Each axis	0	1	1	0
2A	Linear encoder error 1	2A.1	Linear encoder error 1-1	EDB	—	—	○	Each axis	Each axis	0	1	1	0
		2A.2	Linear encoder error 1-2	EDB	—	—	○	Each axis	Each axis				
		2A.3	Linear encoder error 1-3	EDB	—	—	○	Each axis	Each axis				
		2A.4	Linear encoder error 1-4	EDB	—	—	○	Each axis	Each axis				
		2A.5	Linear encoder error 1-5	EDB	—	—	○	Each axis	Each axis				
		2A.6	Linear encoder error 1-6	EDB	—	—	○	Each axis	Each axis				
		2A.7	Linear encoder error 1-7	EDB	—	—	○	Each axis	Each axis				
		2A.8	Linear encoder error 1-8	EDB	—	—	○	Each axis	Each axis				
2B	Encoder counter error	2B.1	Encoder counter error 1	EDB	—	—	○	Each axis	Each axis	1	1	1	0
		2B.2	Encoder counter error 2	EDB	—	—	○	Each axis	Each axis				

Alarm		Detail		Stop method *2*3	Alarm deactivation			Processing system *9	Stop system *9	Alarm code *8			
No.	Name	No.	Name		Alarm reset	CPU reset	Cycling the power			ACD3 (Bit 3)	ACD2 (Bit 2)	ACD1 (Bit 1)	ACD0 (Bit 0)
30	Regenerative error	30.1	Regeneration heat error	DB	○*1	○*1	○*1	Common	All axes	0	0	0	1
		30.2	Regeneration signal error	DB	○*1	○*1	○*1	Common	All axes				
		30.3	Regeneration feedback signal error	DB	○*1	○*1	○*1	Common	All axes				
31	Overspeed	31.1	Abnormal motor speed	SD	○	○	○	Each axis	Each axis	0	1	0	1
32	Overcurrent	32.1	Overcurrent detected at hardware detection circuit (during operation)	DB	—	—	○	Each axis	All axes	0	1	0	0
		32.2	Overcurrent detected at software detection function (during operation)	DB	○	○	○	Each axis	All axes				
		32.3	Overcurrent detected at hardware detection circuit (during a stop)	DB	—	—	○	Each axis	All axes				
		32.4	Overcurrent detected at software detection function (during a stop)	DB	○	○	○	Each axis	All axes				
33	Overvoltage	33.1	Main circuit voltage error	EDB	○	○	○	Common	All axes	1	0	0	1
34	SSCNET receive error 1	34.1	SSCNET receive data error	SD*10	○	○*9	○	Common	All axes	—	—	—	—
		34.2	SSCNET connector connection error	SD*10	○	○	○	Common	All axes	—	—	—	—
		34.3	SSCNET communication data error	SD*10	○	○	○	Each axis	Each axis	—	—	—	—
		34.4	Hardware error signal detection	SD*10	○	○	○	Common	All axes	—	—	—	—
		34.5	SSCNET receive data error (safety observation function)	SD*10	○	○	○	—	—	—	—	—	—
		34.6	SSCNET communication data error (safety observation function)	SD*10	○	○	○	—	—	—	—	—	—
35	Command frequency error	35.1	Command frequency error	SD	○	○	○	Each axis	Each axis	1	1	0	1

Alarm		Detail		Stop method *2*3	Alarm deactivation			Processing system *5	Stop system *9	Alarm code *8			
No.	Name	No.	Name		Alarm reset	CPU reset	Cycling the power			ACD3 (Bit 3)	ACD2 (Bit 2)	ACD1 (Bit 1)	ACD0 (Bit 0)
36	SSCNET receive error 2	36.1	Continuous communication data error	SD*10	○	○	○	Each axis	Each axis	—	—	—	—
		36.2	Continuous communication data error (safety observation function)	SD*10	○	○	○	—	—	—	—	—	—
37	Parameter error	37.1	Parameter setting range error	DB	—	○	○	Each axis	Each axis	1	0	0	0
		37.2	Parameter combination error	DB	—	○	○	Each axis	Each axis				
		37.3	Point table setting error	DB	—	—	○	—	—				
39	Program error	39.1	Program error	DB	—	—	○	—	—	0	0	0	0
		39.2	Instruction argument external error	DB	—	—	○	—	—				
		39.3	Register No. error	DB	—	—	○	—	—				
		39.4	Non-correspondence instruction error	DB	—	—	○	—	—				
3A	Inrush current suppression circuit error	3A.1	Inrush current suppression circuit error	EDB	—	—	○	Common	All axes	0	0	0	0
3D	Parameter setting error for driver communication	3D.1	Parameter combination error for driver communication on slave	DB	—	—	○	—	—	—	—	—	—
		3D.2	Parameter combination error for driver communication on master	DB	—	—	○	—	—	—	—	—	—
3E	Operation mode error	3E.1	Operation mode error	DB	—	○	○	Each axis	Each axis	—	—	—	—
		3E.6	Operation mode switch error	DB	—	—	○	—	—	1	0	0	0
		3E.8	MR-D30 combination error	DB	—	○	○	—	—	—	—	—	—

Alarm		Detail		Stop method *2*3	Alarm deactivation			Processing system *9	Stop system *9	Alarm code *8			
No.	Name	No.	Name		Alarm reset	CPU reset	Cycling the power			ACD3 (Bit 3)	ACD2 (Bit 2)	ACD1 (Bit 1)	ACD0 (Bit 0)
42	Servo control error (for linear servo motor and direct drive motor)	42.1	Servo control error by position deviation	EDB	*4	*4	○	Each axis	Each axis	0	1	1	0
		42.2	Servo control error by speed deviation	EDB	*4	*4	○	Each axis	Each axis				
		42.3	Servo control error by torque/ thrust deviation	EDB	*4	*4	○	Each axis	Each axis				
	Fully closed loop control error (for fully closed loop control)	42.8	Fully closed loop control error by position deviation	EDB	*4	*4	○	Each axis	Each axis				
		42.9	Fully closed loop control error by speed deviation	EDB	*4	*4	○	Each axis	Each axis				
		42.A	Fully closed loop control error by position deviation during command stop	EDB	*4	*4	○	Each axis	Each axis				
45	Main circuit device overheat	45.1	Main circuit device overheat error 1	SD	○*1	○*1	○*1	Common	All axes	0	0	1	1
		45.2	Main circuit device overheat error 2	SD	○*1	○*1	○*1	Common	All axes				
46	Servo motor overheat	46.1	Abnormal temperature of servo motor 1	SD	○*1	○*1	○*1	Each axis	Each axis	0	0	1	1
		46.2	Abnormal temperature of servo motor 2	SD	○*1	○*1	○*1	Each axis	Each axis				
		46.3	Thermistor disconnected error	SD	○*1	○*1	○*1	Each axis	Each axis				
		46.4	Thermistor circuit error	SD	○*1	○*1	○*1	Each axis	Each axis				
		46.5	Abnormal temperature of servo motor 3	DB	○*1	○*1	○*1	Each axis	Each axis				
		46.6	Abnormal temperature of servo motor 4	DB	○*1	○*1	○*1	Each axis	Each axis				
47	Cooling fan error	47.1	Cooling fan stop error	SD	—	—	○	Common	All axes	0	0	1	1
		47.2	Cooling fan speed reduction error	SD	—	—	○	Common	All axes				

Alarm		Detail		Stop method *2*3	Alarm deactivation			Processing system *9	Stop system *9	Alarm code *8			
No.	Name	No.	Name		Alarm reset	CPU reset	Cycling the power			ACD3 (Bit 3)	ACD2 (Bit 2)	ACD1 (Bit 1)	ACD0 (Bit 0)
50	Overload 1	50.1	Thermal overload error 1 during operation	SD	○*1	○*1	○*1	Each axis	Each axis	0	0	1	1
		50.2	Thermal overload error 2 during operation	SD	○*1	○*1	○*1	Each axis	Each axis				
		50.3	Thermal overload error 4 during operation	SD	○*1	○*1	○*1	Each axis	Each axis				
		50.4	Thermal overload error 1 during a stop	SD	○*1	○*1	○*1	Each axis	Each axis				
		50.5	Thermal overload error 2 during a stop	SD	○*1	○*1	○*1	Each axis	Each axis				
		50.6	Thermal overload error 4 during a stop	SD	○*1	○*1	○*1	Each axis	Each axis				
51	Overload 2	51.1	Thermal overload error 3 during operation	DB	○*1	○*1	○*1	Each axis	Each axis	0	0	1	1
		51.2	Thermal overload error 3 during a stop	DB	○*1	○*1	○*1	Each axis	Each axis				
52	Error excessive	52.1	Excess droop pulse 1	SD	○	○	○	Each axis	Each axis	0	1	0	1
		52.3	Excess droop pulse 2	SD	○	○	○	Each axis	Each axis				
		52.4	Error excessive during 0 torque limit	SD	○	○	○	Each axis	Each axis				
		52.5	Excess droop pulse 3	EDB	○	○	○	Each axis	Each axis				
54	Oscillation detection	54.1	Oscillation detection error	EDB	○	○	○	Each axis	Each axis	0	0	1	1
56	Forced stop error	56.2	Over speed during forced stop	EDB	○	○	○	Each axis	Each axis	0	1	1	0
		56.3	Estimated distance over during forced stop	EDB	○	○	○	Each axis	Each axis				
		56.4	Forced stop start error	EDB	○	○	○	Each axis	Each axis				
61	Operation error	61.1	Point table setting range error	DB	○	—	○	—	—	0	1	0	1
63	STO timing error	63.1	STO1 off	DB	○	○	○	Common	All axes	0	1	1	0
		63.2	STO2 off	DB	○	○	○	Common	All axes				
		63.5	STO by functional safety unit	DB	○	○	○	—	—				
64	Functional safety unit setting error	64.1	STO input error	DB	—	—	○	—	—	1	0	0	0
		64.2	Compatibility mode setting error	DB	—	—	○	—	—				
		64.3	Operation mode setting error	DB	—	—	○	—	—				

Alarm		Detail		Stop method *2*3	Alarm deactivation			Processing system *9	Stop system *9	Alarm code *8			
No.	Name	No.	Name		Alarm reset	CPU reset	Cycling the power			ACD3 (Bit 3)	ACD2 (Bit 2)	ACD1 (Bit 1)	ACD0 (Bit 0)
65	Functional safety unit connection error	65.1	Functional safety unit communication error 1	SD	—	—	○	—	—	0	0	0	0
		65.2	Functional safety unit communication error 2	SD	—	—	○	—	—				
		65.3	Functional safety unit communication error 3	SD	—	—	○	—	—				
		65.4	Functional safety unit communication error 4	SD	—	—	○	—	—				
		65.5	Functional safety unit communication error 5	SD	—	—	○	—	—				
		65.6	Functional safety unit communication error 6	SD	—	—	○	—	—				
		65.7	Functional safety unit communication error 7	SD	—	—	○	—	—				
		65.8	Functional safety unit shut-off signal error 1	DB	—	—	○	—	—				
		65.9	Functional safety unit shut-off signal error 2	DB	—	—	○	—	—				

Alarm		Detail		Stop method *2*3	Alarm deactivation			Processing system *5	Stop system *5	Alarm code *8			
No.	Name	No.	Name		Alarm reset	CPU reset	Cycling the power			ACD3 (Bit 3)	ACD2 (Bit 2)	ACD1 (Bit 1)	ACD0 (Bit 0)
66	Encoder initial communication error (safety observation function)	66.1	Encoder initial communication - Receive data error 1 (safety observation function)	DB	—	—	○	—	—	0	1	1	0
		66.2	Encoder initial communication - Receive data error 2 (safety observation function)	DB	—	—	○	—	—				
		66.3	Encoder initial communication - Receive data error 3 (safety observation function)	DB	—	—	○	—	—				
		66.7	Encoder initial communication - Transmission data error 1 (safety observation function)	DB	—	—	○	—	—				
		66.9	Encoder initial communication - Process error 1 (safety observation function)	DB	—	—	○	—	—				
67	Encoder normal communication error 1 (safety observation function)	67.1	Encoder normal communication - Receive data error 1 (safety observation function)	DB	—	—	○	—	—	0	1	1	0
		67.2	Encoder normal communication - Receive data error 2 (safety observation function)	DB	—	—	○	—	—				
		67.3	Encoder normal communication - Receive data error 3 (safety observation function)	DB	—	—	○	—	—				
		67.4	Encoder normal communication - Receive data error 4 (safety observation function)	DB	—	—	○	—	—				
		67.7	Encoder normal communication - Transmission data error 1 (safety observation function)	DB	—	—	○	—	—				
68	STO diagnosis error	68.1	Mismatched STO signal error	DB	—	—	○	Common	Common	0	0	0	0

Alarm		Detail		Stop method *2*3	Alarm deactivation			Processing system *9	Stop system *9	Alarm code *8			
No.	Name	No.	Name		Alarm reset	CPU reset	Cycling the power			ACD3 (Bit 3)	ACD2 (Bit 2)	ACD1 (Bit 1)	ACD0 (Bit 0)
69	Command error	69.1	Forward rotation-side software limit detection - Command excess error	SD	○	○	○	—	—	—	—	—	—
		69.2	Reverse rotation-side software limit detection - Command excess error	SD	○	○	○	—	—	—	—	—	—
		69.3	Forward rotation stroke end detection - Command excess error	SD	○	○	○	—	—	—	—	—	—
		69.4	Reverse rotation stroke end detection - Command excess error	SD	○	○	○	—	—	—	—	—	—
		69.5	Upper stroke limit detection - Command excess error	SD	○	○	○	—	—	—	—	—	—
		69.6	Lower stroke limit detection - Command excess error	SD	○	○	○	—	—	—	—	—	—
70	Load-side encoder initial communication error 1	70.1	Load-side encoder initial communication - Receive data error 1	DB	—	—	○	Each axis	Each axis	0	1	1	0
		70.2	Load-side encoder initial communication - Receive data error 2	DB	—	—	○	Each axis	Each axis				
		70.3	Load-side encoder initial communication - Receive data error 3	DB	—	—	○	Each axis	Each axis				
		70.4	Load-side encoder initial communication - Encoder malfunction *6	DB	—	—	○	Each axis	Each axis				
		70.5	Load-side encoder initial communication - Transmission data error 1	DB	—	—	○	Each axis	Each axis				
		70.6	Load-side encoder initial communication - Transmission data error 2	DB	—	—	○	Each axis	Each axis				

Alarm		Detail		Stop method *2*5	Alarm deactivation			Processing system *8	Stop system *9	Alarm code *8			
No.	Name	No.	Name		Alarm reset	CPU reset	Cycling the power			ACD3 (Bit 3)	ACD2 (Bit 2)	ACD1 (Bit 1)	ACD0 (Bit 0)
70	Load-side encoder initial communication error 1	70.7	Load-side encoder initial communication - Transmission data error 3	DB	—	—	○	Each axis	Each axis	0	1	1	0
		70.8	Load-side encoder initial communication - Incompatible encoder*6	DB	—	—	○	Each axis	Each axis				
		70.A	Load-side encoder initial communication - Process error 1	DB	—	—	○	Each axis	Each axis				
		70.B	Load-side encoder initial communication - Process error 2	DB	—	—	○	Each axis	Each axis				
		70.C	Load-side encoder initial communication - Process error 3	DB	—	—	○	Each axis	Each axis				
		70.D	Load-side encoder initial communication - Process error 4	DB	—	—	○	Each axis	Each axis				
		70.E	Load-side encoder initial communication - Process error 5	DB	—	—	○	Each axis	Each axis				
		70.F	Load-side encoder initial communication - Process error 6	DB	—	—	○	Each axis	Each axis				
71	Load-side encoder normal communication error 1	71.1	Load-side encoder normal communication - Receive data error 1	EDB	—	—	○	Each axis	Each axis	0	1	1	0
		71.2	Load-side encoder normal communication - Receive data error 2	EDB	—	—	○	Each axis	Each axis				
		71.3	Load-side encoder normal communication - Receive data error 3	EDB	—	—	○	Each axis	Each axis				
		71.5	Load-side encoder normal communication - Transmission data error 1	EDB	—	—	○	Each axis	Each axis				

Alarm		Detail		Stop method *2*3	Alarm deactivation			Processing system *9	Stop system *9	Alarm code *8			
No.	Name	No.	Name		Alarm reset	CPU reset	Cycling the power			ACD3 (Bit 3)	ACD2 (Bit 2)	ACD1 (Bit 1)	ACD0 (Bit 0)
71	Load-side encoder normal communication error 1	71.6	Load-side encoder normal communication - Transmission data error 2	EDB	—	—	○	Each axis	Each axis	0	1	1	0
		71.7	Load-side encoder normal communication - Transmission data error 3	EDB	—	—	○	Each axis	Each axis				
		71.9	Load-side encoder normal communication - Receive data error 4	EDB	—	—	○	Each axis	Each axis				
		71.A	Load-side encoder normal communication - Receive data error 5	EDB	—	—	○	Each axis	Each axis				
72	Load-side encoder normal communication error 2	72.1	Load-side encoder data error 1	EDB	—	—	○	Each axis	Each axis	0	1	1	0
		72.2	Load-side encoder data update error	EDB	—	—	○	Each axis	Each axis				
		72.3	Load-side encoder data waveform error	EDB	—	—	○	Each axis	Each axis				
		72.4	Load-side encoder non-signal error	EDB	—	—	○	Each axis	Each axis				
		72.5	Load-side encoder hardware error 1	EDB	—	—	○	Each axis	Each axis				
		72.6	Load-side encoder hardware error 2	EDB	—	—	○	Each axis	Each axis				
		72.9	Load-side encoder data error 2	EDB	—	—	○	Each axis	Each axis				
74	Option card error 1	74.1	Option card error 1	DB	—	—	○	—	—	—	—	—	—
		74.2	Option card error 2	DB	—	—	○	—	—	—	—	—	—
		74.3	Option card error 3	DB	—	—	○	—	—	—	—	—	—
		74.4	Option card error 4	DB	—	—	○	—	—	—	—	—	—
		74.5	Option card error 5	DB	—	—	○	—	—	—	—	—	—
75	Option card error 2	75.3	Option card connection error	EDB	—	—	○	—	—	—	—	—	—
		75.4	Option card disconnected	DB	—	—	○	—	—	—	—	—	—

Alarm		Detail		Stop method *2*3	Alarm deactivation			Processing system *9	Stop system *9	Alarm code *8			
No.	Name	No.	Name		Alarm reset	CPU reset	Cycling the power			ACD3 (Bit 3)	ACD2 (Bit 2)	ACD1 (Bit 1)	ACD0 (Bit 0)
79	Functional safety unit diagnosis error	79.1	Functional safety unit power voltage error	DB	○*7	—	○	—	—	1	1	1	1
		79.2	Functional safety unit internal error	DB	—	—	○	—	—				
		79.3	Abnormal temperature of functional safety unit	SD	○*7	—	○	—	—				
		79.4	Servo amplifier error	SD	—	—	○	—	—				
		79.5	Input device error	SD	—	—	○	—	—				
		79.6	Output device error	SD	—	—	○	—	—				
		79.7	Mismatched input signal error	SD	—	—	○	—	—				
		79.8	Position feedback fixing error	DB	—	—	○	—	—				
7A	Parameter setting error (safety observation function)	7A.1	Parameter verification error (safety observation function)	DB	—	—	○	—	—	1	0	0	0
		7A.2	Parameter setting range error (safety observation function)	DB	—	—	○	—	—				
		7A.3	Parameter combination error (safety observation function)	DB	—	—	○	—	—				
		7A.4	Functional safety unit combination error (safety observation function)	DB	—	—	○	—	—				

Alarm		Detail		Stop method *2*3	Alarm deactivation			Processing system *9	Stop system *9	Alarm code *8			
No.	Name	No.	Name		Alarm reset	CPU reset	Cycling the power			ACD3 (Bit 3)	ACD2 (Bit 2)	ACD1 (Bit 1)	ACD0 (Bit 0)
7B	Encoder diagnosis error (safety observation function)	7B.1	Encoder diagnosis error 1 (safety observation function)	DB	—	—	○	—	—	0	1	1	0
		7B.2	Encoder diagnosis error 2 (safety observation function)	DB	—	—	○	—	—				
		7B.3	Encoder diagnosis error 3 (safety observation function)	DB	—	—	○	—	—				
		7B.4	Encoder diagnosis error 4 (safety observation function)	DB	—	—	○	—	—				
7C	Functional safety unit communication diagnosis error (safety observation function)	7C.1	Functional safety unit communication setting error (safety observation function)	SD	○*7	○	○	—	—	0	0	0	0
		7C.2	Functional safety unit communication data error (safety observation function)	SD	○*7	○	○	—	—				
7D	Safety observation error	7D.1	Stop observation error	DB	○*5	—	○	—	—	1	1	1	1
		7D.2	Speed observation error	DB	○*7	—	○	—	—				
82	Master-slave operation error 1	82.1	Master-slave operation error 1	EDB	○	○	○	—	—	—	—	—	—
84	Network module initialization error	84.1	Network module undetected error	DB	—	—	○	—	—	—	—	—	—
		84.2	Network module initialization error 1	DB	—	—	○	—	—	—	—	—	—
		84.3	Network module initialization error 2	DB	—	—	○	—	—	—	—	—	—
85	Network module error	85.1	Network module error 1	SD	—	—	○	—	—	—	—	—	—
		85.2	Network module error 2	SD	—	—	○	—	—	—	—	—	—
		85.3	Network module error 3	SD	—	—	○	—	—	—	—	—	—

Alarm		Detail		Stop method *2*3	Alarm deactivation			Processing system *9	Stop system *9	Alarm code *8			
No.	Name	No.	Name		Alarm reset	CPU reset	Cycling the power			ACD3 (Bit 3)	ACD2 (Bit 2)	ACD1 (Bit 1)	ACD0 (Bit 0)
86	Network communication error	86.1	Network communication error 1	SD	○	—	○	—	—	—	—	—	—
		86.2	Network communication error 2	SD	○	—	○	—	—	—	—	—	—
		86.3	Network communication error 3	SD	○	—	○	—	—	—	—	—	—
		86.4	Network communication error 4	SD	○	—	○	—	—	—	—	—	—
8A	USB communication time-out error/ serial communication time-out error/ Modbus RTU communication time-out error	8A.1	USB communication time-out error/ serial communication time-out error	SD	○	○	○	Common	All axes	0	0	0	0
		8A.2	Modbus RTU communication time-out error	SD	○	○	○	—	—				
8D	CC-Link IE communication error	8D.1	CC-Link IE communication error 1	SD	○	—	○	—	—	—	—	—	—
		8D.2	CC-Link IE communication error 2	SD	○	—	○	—	—	—	—	—	—
		8D.3	Master station setting error 1	DB	○	—	○	—	—	—	—	—	—
		8D.5	Master station setting error 2	DB	—	—	○	—	—	—	—	—	—
		8D.6	CC-Link IE communication error 3	SD	○	—	○	—	—	—	—	—	—
		8D.7	CC-Link IE communication error 4	SD	○	—	○	—	—	—	—	—	—
		8D.8	CC-Link IE communication error 5	SD	○	—	○	—	—	—	—	—	—
		8D.9	Synchronization error 1	SD	—	—	○	—	—	—	—	—	—
		8D.A	Synchronization error 2	SD	—	—	○	—	—	—	—	—	—
8E	USB communication error/serial communication error/Modbus RTU communication error	8E.1	USB communication receive error/ serial communication receive error	SD	○	○	○	Common	All axes	0	0	0	0
		8E.2	USB communication checksum error/ serial communication checksum error	SD	○	○	○	Common	All axes				
		8E.3	USB communication character error/ serial communication character error	SD	○	○	○	Common	All axes				

Alarm		Detail		Stop method *2*3	Alarm deactivation			Processing system *9	Stop system *9	Alarm code *8			
No.	Name	No.	Name		Alarm reset	CPU reset	Cycling the power			ACD3 (Bit 3)	ACD2 (Bit 2)	ACD1 (Bit 1)	ACD0 (Bit 0)
8E	USB communication error/serial communication error/Modbus RTU communication error	8E.4	USB communication command error/ serial communication command error	SD	○	○	○	Common	All axes	0	0	0	0
		8E.5	USB communication data number error/serial communication data number error	SD	○	○	○	Common	All axes				
		8E.6	Modbus RTU communication receive error	SD	○	○	○	—	—				
		8E.7	Modbus RTU communication message frame error	SD	○	○	○	—	—				
		8E.8	Modbus RTU communication CRC error	SD	○	○	○	—	—				
888 88	Watchdog	8888 _	Watchdog	DB	—	—	○	Common	All axes	—	—	—	—

*1 After resolving the source of trouble, cool the equipment for approximately 30 minutes.

*2 The following shows three stop methods of DB, EDB, and SD.
DB: Stops with dynamic brake. (Coasts for the servo amplifier without dynamic brake.)
Coasts for MR-J4-03A6(-RJ) and MR-J4W2-0303B6. Note that EDB is applied when an alarm below occurs:
[AL. 30.1], [AL. 32.2], [AL. 32.4], [AL. 51.1], [AL. 51.2], [AL. 888]
SD: Forced stop deceleration
EDB: Electronic dynamic brake stop (available with specified servo motors)
Refer to the following table for the specified servo motors. The stop method for other than the specified servo motors will be DB.

Series	Servo motor
HG-KR	HG-KR053/HG-KR13/HG-KR23/HG-KR43
HG-MR	HG-MR053/HG-MR13/HG-MR23/HG-MR43
HG-SR	HG-SR51/HG-SR52
HG-AK	HG-AK0136/HG-AK0236/HG-AK0336

*3 This is applicable when [Pr. PA04] is set to the initial value. The stop system of SD can be changed to DB using [Pr. PA04].

*4 The alarm can be canceled by setting as follows:
For the fully closed loop control: set [Pr. PE03] to "1 _ _ _".
When a linear servo motor or direct drive motor is used: set [Pr. PL04] to "1 _ _ _".

*5 In some controller communication status, the alarm factor may not be removed.

*6 This alarm will occur only in the J3 compatibility mode.

*7 Reset this while all the safety observation functions are stopped.

*8 Alarm codes are outputted only from MR-J4-_A_(-RJ)/MR-J4-DU_A_(-RJ). Refer to the following for details.
☞ Page 6 Explanation for the lists

*9 The processing and stop systems are applicable only for the multi-axis servo amplifiers (MR-J4W_-_B_). Refer to the following for details.
☞ Page 6 Explanation for the lists

*10 In the parallel drive system, the stop method is DB.

1.3 Warning list

Warning		Detail		Stop method *2*3	Processing system *5	Stop system *6
No.	Name	No.	Name			
90	Home position return incomplete warning	90.1	Home position return incomplete	—	—	—
		90.2	Home position return abnormal termination	—	—	—
		90.5	Z-phase unpassed	—	—	—
91	Servo amplifier overheat warning*1	91.1	Main circuit device overheat warning	—	Common	—
92	Battery cable disconnection warning	92.1	Encoder battery cable disconnection warning	—	Each axis	—
		92.3	Battery degradation	—	Each axis	—
93	ABS data transfer warning	93.1	ABS data transfer requirement warning during magnetic pole detection	—	—	—
95	STO warning	95.1	STO1 off detection	DB	Common	All axes
		95.2	STO2 off detection	DB	Common	All axes
		95.3	STO warning 1 (safety observation function)	DB	—	—
		95.4	STO warning 2 (safety observation function)	DB	—	—
		95.5	STO warning 3 (safety observation function)	DB	—	—
96	Home position setting warning	96.1	In-position warning at home positioning	—	Each axis	—
		96.2	Command input warning at home positioning	—	Each axis	—
		96.3	Servo off warning at home positioning	—	—	—
		96.4	Home positioning warning during magnetic pole detection	—	—	—
97	Positioning specification warning	97.1	Program operation disabled warning	—	—	—
		97.2	Next station position warning	—	—	—
98	Software limit warning	98.1	Forward rotation-side software stroke limit reached	—	—	—
		98.2	Reverse rotation-side software stroke limit reached	—	—	—
99	Stroke limit warning	99.1	Forward rotation stroke end off	*4*7	—	—
		99.2	Reverse rotation stroke end off	*4*7	—	—
		99.4	Upper stroke limit off	*7	Each axis	—
		99.5	Lower stroke limit off	*7	Each axis	—
9A	Optional unit input data error warning	9A.1	Optional unit input data sign error	—	—	—
		9A.2	Optional unit BCD input data error	—	—	—
9B	Error excessive warning	9B.1	Excess droop pulse 1 warning	—	Each axis	—
		9B.3	Excess droop pulse 2 warning	—	Each axis	—
		9B.4	Error excessive warning during 0 torque limit	—	Each axis	—
9C	Converter error	9C.1	Converter unit error	—	—	—
9D	CC-Link IE warning 1	9D.1	Station number switch change warning	—	—	—
		9D.2	Master station setting warning	—	—	—
		9D.3	Overlapping station number warning	—	—	—
		9D.4	Mismatched station number warning	—	—	—
9E	CC-Link IE warning 2	9E.1	CC-Link IE communication warning	—	—	—
9F	Battery warning	9F.1	Low battery	—	Each axis	—
		9F.2	Battery degradation warning	—	Each axis	—
E0	Excessive regeneration warning	E0.1	Excessive regeneration warning	—	Common	—

Warning		Detail		Stop method *2*3	Processing system *5	Stop system *5
No.	Name	No.	Name			
E1	Overload warning 1	E1.1	Thermal overload warning 1 during operation	—	Each axis	—
		E1.2	Thermal overload warning 2 during operation	—	Each axis	—
		E1.3	Thermal overload warning 3 during operation	—	Each axis	—
		E1.4	Thermal overload warning 4 during operation	—	Each axis	—
		E1.5	Thermal overload error 1 during a stop	—	Each axis	—
		E1.6	Thermal overload error 2 during a stop	—	Each axis	—
		E1.7	Thermal overload error 3 during a stop	—	Each axis	—
		E1.8	Thermal overload error 4 during a stop	—	Each axis	—
E2	Servo motor overheat warning	E2.1	Servo motor temperature warning	—	Each axis	—
E3	Absolute position counter warning	E3.1	Multi-revolution counter travel distance excess warning	—	—	—
		E3.2	Absolute position counter warning	—	Each axis	—
		E3.4	Absolute positioning counter EEP-ROM writing frequency warning	—	—	—
		E3.5	Encoder absolute positioning counter warning	—	Each axis	—
E4	Parameter warning	E4.1	Parameter setting range error warning	—	Each axis	—
E5	ABS time-out warning	E5.1	Time-out during ABS data transfer	—	—	—
		E5.2	ABSM off during ABS data transfer	—	—	—
		E5.3	SON off during ABS data transfer	—	—	—
E6	Servo forced stop warning	E6.1	Forced stop warning	SD	Common	All axes
		E6.2	SS1 forced stop warning 1 (safety observation function)	SD	—	—
		E6.3	SS1 forced stop warning 2 (safety observation function)	SD	—	—
E7	Controller forced stop warning	E7.1	Controller forced stop input warning	SD	Common	All axes
E8	Cooling fan speed reduction warning	E8.1	Decreased cooling fan speed warning	—	Common	—
		E8.2	Cooling fan stop	—	Common	—
E9	Main circuit off warning	E9.1	Servo-on signal on during main circuit off	DB	Common	All axes
		E9.2	Bus voltage drop during low speed operation	DB	Common	All axes
		E9.3	Ready-on signal on during main circuit off	DB	Common	All axes
		E9.4	Converter unit forced stop	DB	—	—
EA	ABS servo-on warning	EA.1	ABS servo-on warning	—	—	—
EB	The other axis error warning	EB.1	The other axis error warning	DB	Each axis	*6
EC	Overload warning 2	EC.1	Overload warning 2	—	Each axis	—
ED	Output watt excess warning	ED.1	Output watt excess warning	—	Each axis	—
F0	Tough drive warning	F0.1	Instantaneous power failure tough drive warning	—	Each axis	—
		F0.3	Vibration tough drive warning	—	Each axis	—
F2	Drive recorder - Miswriting warning	F2.1	Drive recorder - Area writing time-out warning	—	Common	—
		F2.2	Drive recorder - Data miswriting warning	—	Common	—
F3	Oscillation detection warning	F3.1	Oscillation detection warning	—	Each axis	—
F4	Positioning warning	F4.4	Target position setting range error warning	—	—	—
		F4.6	Acceleration time constant setting range error warning	—	—	—
		F4.7	Deceleration time constant setting range error warning	—	—	—
		F4.9	Home position return type error warning	—	—	—

Warning		Detail		Stop method *2*3	Processing system *5	Stop system *5
No.	Name	No.	Name			
F5	Simple cam function - Cam data miswriting warning	F5.1	Cam data - Area writing time-out warning	—	—	—
		F5.2	Cam data - Area miswriting warning	—	—	—
		F5.3	Cam data checksum error	—	—	—
F6	Simple cam function - Cam control warning	F6.1	Cam axis one cycle current value restoration failed	—	—	—
		F6.2	Cam axis feed current value restoration failed	—	—	—
		F6.3	Cam unregistered error	—	—	—
		F6.4	Cam control data setting range error	—	—	—
		F6.5	Cam No. external error	—	—	—
		F6.6	Cam control inactive	—	—	—
F7	Machine diagnosis warning	F7.1	Vibration failure prediction warning	—	Each axis	—
		F7.2	Friction failure prediction warning	—	Each axis	—
		F7.3	Total travel distance failure prediction warning	—	Each axis	—

*1 After resolving the source of trouble, cool the equipment for approximately 30 minutes.

*2 The following shows two stop methods of DB and SD.
DB: Stops with dynamic brake. (Coasts for the servo amplifier without dynamic brake.)
Coasts for MR-J4-03A6(-RJ) and MR-J4W2-0303B6.
SD: Forced stop deceleration

*3 This is applicable when [Pr. PA04] is set to the initial value. The stop system of SD can be changed to DB using [Pr. PA04].

*4 For MR-J4-_A_ servo amplifier, quick stop or slow stop can be selected using [Pr. PD30].

*5 The processing and stop systems are applicable only for the multi-axis servo amplifiers (MR-J4W_-_B_). Refer to the following for details.
☞ Page 6 Explanation for the lists

*6 As the initial value, it is applicable only for [AL. 24] and [AL. 32]. All-axis stop can be selected using [Pr. PF02].

*7 For MR-J4-_GF_ servo amplifier, quick stop or slow stop can be selected using [Pr. PD12]. (I/O mode only)

1.4 Remedies for alarms

⚠CAUTION

- When any alarm has occurred, eliminate its cause, ensure safety, and deactivate the alarm before restarting operation. Otherwise, it may cause injury.
- If [AL. 25 Absolute position erased] occurs, always make home position setting again. Otherwise, it may cause an unexpected operation.
- As soon as an alarm occurs, make the Servo-off status and interrupt the main circuit power.

Point

When any of the following alarms has occurred, do not cycle the power repeatedly to restart. Doing so will cause a malfunction of the servo amplifier and servo motor. Remove its cause and allow about 30 minutes for cooling before resuming the operation.

- [AL. 30 Regenerative error]
- [AL. 45 Main circuit device overheat]
- [AL. 46 Servo motor overheat]
- [AL. 50 Overload 1]
- [AL. 51 Overload 2]

[AL. 37 Parameter error] is not recorded in the alarm history.

Remove the cause of the alarm in accordance with this section. Use MR Configurator2 to refer to the cause of alarm occurrence.

Alarm No.: 10		Name: Undervoltage					
Alarm content		· The voltage of the control circuit power supply has dropped. · The voltage of the main circuit power supply has dropped.					
Detail No.	Detail name	Cause		Check method	Check result	Action	Target
10.1	Voltage drop in the control circuit power	(1)	The control circuit power supply connection is incorrect.	Check the connection of the control circuit power supply.	It has a failure.	Connect it correctly.	[A] [B] [WB] [RJ010] [GF]
					It has no failure.	Check (2).	
		(2)	The voltage of the control circuit power supply is low.	Check if the voltage of the control circuit power supply is lower than prescribed value. 200 V class: 160 V AC 400 V class: 280 V AC 100 V class: 83 V AC 24 V DC input: 17 V DC	The voltage is the prescribed value or lower.	Review the voltage of the control circuit power supply.	
					The voltage is higher than the prescribed value.	Check (3).	
		(3)	The power was cycled before the internal control circuit power supply stopped.	Check the power-on method if it has a problem.	It has a problem.	Cycle the power after the seven-segment LED of the servo amplifier is turned off.	
					It has no problem.	Check (4).	
		(4)	An instantaneous power failure has occurred for longer time than the specified time. The time will be 60 ms when [Pr. PA20] is "_ 0 _ _". The time will be the value set in [Pr. PF25] when [Pr. PA20] is "_ 1 _ _". The time will be 60 ms when [Pr. PX25] is "_ 0 _ _" and the J3 extension function is used. The time will be the value set in [Pr. PX26] when [Pr. PX25] is "_ 1 _ _". An instantaneous power failure of 15 ms or longer has occurred on MR-J4-03A6(-RJ) or MR-J4W2-0303B6.	Check if the power has a problem.	It has a problem.	Review the power.	
					It has no problem.	Check (5).	
		(5)	When a power regeneration converter is used, the voltage of the control circuit power supply is distorted.	Check if the power has a problem. When power supply impedance is high, power supply voltage will be distorted due to current at power regeneration, and it may be recognized as undervoltage.	It has a problem.	Review the setting of "[AL. 10 Undervoltage] detection method selection" with the following parameters. [A]: [Pr. PC27] [B] [WB] [RJ010] [GF]: [Pr. PC20] Review the power.	

Alarm No.: 10		Name: Undervoltage					
Alarm content		· The voltage of the control circuit power supply has dropped. · The voltage of the main circuit power supply has dropped.					
Detail No.	Detail name	Cause		Check method	Check result	Action	Target
10.2	Voltage drop in the main circuit power	(1)	The main circuit power supply wiring was disconnected. For the drive unit, the main circuit power supply wiring of the converter unit was disconnected.	Check the main circuit power supply wiring. Check the main circuit power supply wiring of the converter unit.	It is disconnected.	Connect it correctly.	[A] [B] [WB] [RJ010] [GF]
					It is connected.	Check (2).	
		(2)	The wiring between P3 and P4 was disconnected. For the drive unit, the wiring between P1 and P2 of the converter unit was disconnected.	Check the wiring between P3 and P4. Check the wiring between P1 and P2 of the converter unit.	It is disconnected.	Connect it correctly.	
					It is connected.	Check (3).	
		(3)	For the drive unit, the magnetic contactor control connector of the converter unit was disconnected.	Check the magnetic contactor control connector of the converter unit.	It is disconnected.	Connect it correctly.	
					It has no failure.	Check (4).	
		(4)	For the drive unit, the bus bar between the converter unit and drive unit was disconnected.	Check the bus bar between the converter unit and drive unit.	It is disconnected.	Connect it correctly.	
					It has no failure.	Check (5).	
		(5)	The voltage of the main circuit power supply is low.	Check if the voltage of the main circuit power supply is the prescribed value or lower. 200 V class: 160 V AC 400 V class: 280 V AC 100 V class: 83 V AC 48 V DC setting: 35 V DC 24 V DC setting: 15 V DC	The voltage is the prescribed value or lower.	Increase the voltage of the main circuit power supply.	
					The voltage is higher than the prescribed value.	Check (6).	
		(6)	The alarm has occurred during acceleration.	Check if the bus voltage during acceleration is lower than the prescribed value. 200 V class: 200 V DC 400 V class: 380 V DC 100 V class: 158 V DC 48 V DC setting: 35 V DC 24 V DC setting: 15 V DC	The voltage is lower than the prescribed value.	Increase the acceleration time constant. Or increase the power supply capacity.	
					The voltage is equal to or higher than the prescribed value.	Check (7).	
		(7)	The servo amplifier is malfunctioning.	Check the bus voltage value.	The bus voltage is less than the prescribed value although the voltage of the main circuit power supply is within specifications. 200 V class: 200 V DC 400 V class: 380 V DC 100 V class: 158 V DC 48 V DC setting: 35 V DC 24 V DC setting: 15 V DC	Replace the servo amplifier.	
		(8)	For the drive unit, the converter unit is malfunctioning.	Replace the converter unit, and then check the repeatability.	It is not repeatable.	Replace the converter unit.	

Alarm No.: 11	Name: Switch setting error						
Alarm content	· The setting of the axis selection rotary switch or auxiliary axis number setting switch is incorrect. · The setting of the disabling control axis switch is incorrect. · The setting of the station number selection rotary switch is incorrect.						
Detail No.	Detail name	Cause		Check method	Check result	Action	Target
11.1	Axis number setting error	(1)	The setting of the axis No. is incorrect.	Check the settings of the auxiliary axis number setting switches (SW2-5/ SW2-6) and axis selection rotary switch (SW1).	When both of the auxiliary axis number setting switches are on, check the axis selection rotary switch if "F" is selected for MR-J4W2, ("E" or "F" is selected for MR-J4W3).	Set the axis No. correctly.	[WB]
					Both of the auxiliary axis number setting switches are off.	Replace the servo amplifier.	
	Station number setting error	(2)	The station number is set to a value other than "1" to "120" with the station number selection rotary switch.	Check the settings of the station number selection rotary switches (SW2/ SW3).	The setting of the station number selection rotary switch is set to "0" or "121" or more.	Set the station number correctly.	[GF]
					The station number is set to a value from "1" to "120" with the station number selection rotary switch.	Replace the servo amplifier.	
11.2	Disabling control axis setting error	(1)	The setting of the disabling control axis switch is incorrect.	Check the setting of the disabling control axis switch.	Check if the setting is as follows. 1) Only A-axis is disabled. 2) Only B-axis is disabled. 3) A-axis and B-axis are disabled. 4) A-axis and C-axis are disabled. 5) All axes are disabled.	Set it correctly.	[WB]
					The setting is other than above.	Replace the servo amplifier.	

Alarm No.: 12	Name: Memory error 1 (RAM)						
Alarm content	· A part (RAM) in the servo amplifier is failure.						
Detail No.	Detail name	Cause		Check method	Check result	Action	Target
12.1	RAM error 1	(1)	A part in the servo amplifier is failure.	Disconnect the cables except for the control circuit power supply, and then check the repeatability.	It is repeatable.	Replace the servo amplifier.	[A] [B] [WB] [RJ010] [GF]
					It is not repeatable.	Check (2).	
		(2)	Something near the device caused it.	Check the power supply for noise.	There is a problem in the surrounding.	Take countermeasures against its cause.	
12.2	RAM error 2	Check it with the check method for [AL. 12.1].					
12.3	RAM error 3						
12.4	RAM error 4						
12.5	RAM error 5						
12.6	RAM error 6						

Alarm No.: 13		Name: Clock error					
Alarm content		· A part in the servo amplifier is failure. · A clock error transmitted from the controller occurred. · [RJ010]: MR-J3-T10 came off.					
Detail No.	Detail name	Cause		Check method	Check result	Action	Target
13.1	Clock error 1	(1)	The MR-J3-T10 came off during the CC-Link IE communication.	Check if [AL. 74 Option card error 1] occurred with alarm history.	It is occurring.	Check it with the check method for [AL. 74].	[RJ010]
					It did not occur.	Check (2).	
		(2)	A part in the servo amplifier is failure.	Disconnect the cables except for the control circuit power supply, and then check the repeatability.	It is repeatable.	Replace the servo amplifier.	[A] [B] [WB] [RJ010] [GF]
					It is not repeatable.	Check (3).	
		(3)	A clock error transmitted from the controller occurred.	Check if the alarm occurs when you connect the amplifier to the controller.	It occurs.	Replace the controller.	[B] [WB]
					It does not occur.	Check (4).	
		(4)	The servo amplifier of the next axis is malfunctioning.	Check if the servo amplifier of the next axis is malfunctioning.	It is malfunctioning.	Replace the servo amplifier of the next axis.	
					It is not malfunctioning.	Check (5).	
		(5)	Something near the device caused it.	Check the power supply for noise. Check if the connector is shorted.	There is a problem in the surrounding.	Take countermeasures against its cause.	[A] [B] [WB] [RJ010] [GF]
13.2	Clock error 2	Check it with the check method for [AL. 13.1].					
13.3	Clock error 3						

Alarm No.: 14	Name: Control process error						
Alarm content	The process did not complete within the specified time. [RJ010]: MR-J3-T10 came off. [GF]: A part (communication IC) in the servo amplifier is failure.						
Detail No.	Detail name	Cause		Check method	Check result	Action	Target
14.1	Control process error 1	(1)	The MR-J3-T10 came off during the CC-Link IE communication.	Check if [AL. 74 Option card error 1] occurred with alarm history.	It is occurring.	Check it with the check method for [AL. 74].	[RJ010]
					It did not occur.	Check (2).	
		(2)	The parameter setting is incorrect.	Check if the parameter setting is incorrect.	It is incorrect.	Set it correctly.	[A] [B] [WB] [RJ010] [GF]
					It is correct.	Check (3).	
		(3)	Something near the device caused it.	Check the power supply for noise. Check if the connector is shorted.	There is a problem in the surrounding.	Take countermeasures against its cause.	
					There is no problem in the surrounding.	Check (4).	
		(4)	The servo amplifier is malfunctioning.	Replace the servo amplifier, and then check the repeatability.	It is not repeatable.	Replace the servo amplifier.	
14.2	Control process error 2	(1)	The MR-J3-T10 came off during the CC-Link IE communication.	Check if [AL. 74 Option card error 1] occurred with alarm history.	It is occurring.	Check it with the check method for [AL. 74].	[RJ010]
					It did not occur.	Check (2).	
		(2)	A synchronous signal error transmitted from the controller occurred.	Replace the controller, and then check the repeatability.	It is repeatable.	Replace the servo amplifier.	[B] [WB]
					It is not repeatable.	Check (3).	
		(3)	Adaptive tuning mode or vibration suppression control tuning mode has been executed for multiple axes simultaneously.	Check the setting of [Pr. PB01] or [Pr. PB02]. With the J3 extension function, Check the setting of [Pr. PB01], [Pr. PB02], or [Pr. PX03].	It has been executed for multiple axes simultaneously.	Execute it for each axis.	[WB]
					It has not been executed for multiple axes simultaneously.	Check (4).	
		(4)	The parameter setting is incorrect.	Check if the parameter setting is incorrect.	It is incorrect.	Set it correctly.	[A] [B] [WB] [RJ010] [GF]
					It is correct.	Check (5).	
		(5)	Something near the device caused it.	Check the power supply for noise. Check if the connector is shorted.	There is a problem in the surrounding.	Take countermeasures against its cause.	
					There is no problem in the surrounding.	Check (6).	
		(6)	The servo amplifier is malfunctioning.	Replace the servo amplifier, and then check the repeatability.	It is not repeatable.	Replace the servo amplifier.	
14.3	Control process error 3	Check it with the check method for [AL. 14.1].					
14.4	Control process error 4						
14.5	Control process error 5						
14.6	Control process error 6						
14.7	Control process error 7						
14.8	Control process error 8						
14.9	Control process error 9						
14.A	Control process error 10						

Alarm No.: 14		Name: Control process error						
Alarm content		· The process did not complete within the specified time. · [RJ010]: MR-J3-T10 came off. · [GF]: A part (communication IC) in the servo amplifier is failure.						
Detail No.	Detail name	Cause		Check method	Check result	Action	Target
14.B	Control process error 11	(1)	The MR-J3-T10 came off during the CC-Link IE communication.	Check if [AL. 74 Option card error 1] occurred with alarm history.	It is occurring.	Check it with the check method for [AL. 74].	[RJ010]
					It did not occur.	Check (2).	
		(2)	The parameter setting is incorrect.	Check if the parameter setting is incorrect.	It is incorrect.	Set it correctly.	[A] [B] [WB] [RJ010]
					It is correct.	Check (3).	
		(3)	Something near the device caused it.	Check the power supply for noise. Check if the connector is shorted.	It has a failure.	Take countermeasures against its cause.	[A] [B] [WB] [RJ010] [GF]
					It has no failure.	Check (4).	
		(4)	The servo amplifier is malfunctioning.	Replace the servo amplifier, and then check the repeatability.	It is not repeatable.	Replace the servo amplifier.	
14.C	Control process error 12	Check it with the check method for [AL. 14.B].					
14.D	Control process error 13						

Alarm No.: 15		Name: Memory error 2 (EEP-ROM)					
Alarm content		· A part (EEP-ROM) in the servo amplifier is failure. · [RJ010]: MR-J3-T10 came off.					
Detail No.	Detail name	Cause		Check method	Check result	Action	Target
15.1	EEP-ROM error at power on	(1)	EEP-ROM is malfunctioning at power on.	Disconnect the cables except for the control circuit power supply, and then check the repeatability.	It is repeatable.	Replace the servo amplifier.	[A] [B] [WB] [RJ010] [GF]
					It is not repeatable.	Check (2).	
		(2)	Something near the device caused it.	Check the power supply for noise. Check if the connector is shorted.	There is a problem in the surrounding.	Take countermeasures against its cause.	
					There is no problem in the surrounding.	Check (3).	
		(3)	The number of write times exceeded 100,000.	Check if parameters, point tables, or programs are changed very frequently.	It was changed.	Replace the servo amplifier. Change the process to use parameters, point tables, and programs less frequently after replacement.	
15.2	EEP-ROM error during operation	(1)	The MR-J3-T10 came off during the CC-Link IE communication.	Check if [AL. 74 Option card error 1] occurred with alarm history.	It is occurring.	Check it with the check method for [AL. 74].	[RJ010]
					It did not occur.	Check (2).	
		(2)	EEP-ROM is malfunctioning during normal operation.	Check if the error occurs when you change parameters during normal operation.	It occurs.	Replace the servo amplifier.	[A] [B] [WB] [RJ010] [GF]
					It does not occur.	Check (3).	
		(3)	A write error occurred while adjustment results were processed.	Check if the alarm occurs after an hour from power on.	It takes an hour or more.	Replace the servo amplifier.	
					It takes less than an hour.	Check (4).	
		(4)	Something near the device caused it.	Check the power supply for noise. Check if the connector is shorted.	There is a problem in the surrounding.	Take countermeasures against its cause.	
15.4	Home position information read error	(1)	EEP-ROM is malfunctioning at power on.	Disconnect the cables except for the control circuit power supply, and then check the repeatability.	It is repeatable.	Replace the servo amplifier.	[A] [GF]
					It is not repeatable.	Check (2).	
		(2)	Multiple rotation data saved as a home position and read from EEP-ROM were failure.	Check if the home position was set correctly.	It has a failure.	Make home position setting again.	
					It has no failure.	Check (3).	
		(3)	Something near the device caused it.	Check the power supply for noise. Check if the connector is shorted.	There is a problem in the surrounding.	Take countermeasures against its cause.	
					There is no problem in the surrounding.	Check (4).	
		(4)	The number of write times exceeded 100,000.	Check if parameters has been used very frequently.	It was changed.	Replace the servo amplifier. Change the process to use parameters less frequently after replacement.	

Alarm No.: 16		Name: Encoder initial communication error 1					
Alarm content		An error occurred in the communication between an encoder and servo amplifier.					
Detail No.	Detail name	Cause		Check method	Check result	Action	Target
16.1	Encoder initial communication - Receive data error 1	(1)	An encoder cable is malfunctioning.	Check if the encoder cable is disconnected or shorted.	It has a failure.	Replace or repair the cable.	[A] [B] [WB] [RJ010] [GF]
					It has no failure.	Check (2).	
		(2)	When you use a linear servo motor with an A/B/Z-phase differential output linear encoder, the servo amplifier is not compatible with the linear encoder.	Check if the servo amplifier (MR-J4-_-RJ) is compatible with the A/B/Z-phase differential output linear encoder.	The servo amplifier is not compatible with it.	Use a servo amplifier which is compatible with it.	[A] [B] [GF]
					The servo amplifier is compatible with it.	Check (3).	
		(3)	When you use a linear servo motor with an A/B/Z-phase differential output linear encoder, the connection with the linear encoder is incorrect.	Check if the wiring of the linear encoder is correct. (Check if it is wired to PSEL.)	The wiring is incorrect.	Wire it correctly.	
					The wiring is correct.	Check (4).	
		(4)	The servo amplifier is malfunctioning.	Replace the servo amplifier, and then check the repeatability.	It is not repeatable.	Replace the servo amplifier.	[A] [B] [WB] [RJ010] [GF]
					It is repeatable.	Check (5).	
		(5)	An encoder is malfunctioning.	Replace the servo motor or linear encoder, and then check the repeatability.	It is not repeatable.	Replace the servo motor.	
					It is repeatable.	Check (6).	
		(6)	Something near the device caused it.	Check the noise, ambient temperature, vibration, etc.	There is a problem in the surrounding.	Take countermeasures against its cause.	
16.2	Encoder initial communication - Receive data error 2	Check it with the check method for [AL. 16.1].					

Alarm No.: 16		Name: Encoder initial communication error 1					
Alarm content		· An error occurred in the communication between an encoder and servo amplifier.					
Detail No.	Detail name	Cause		Check method	Check result	Action	Target
16.3	Encoder initial communication - Receive data error 3	(1)	An axis not used is not set as disabled-axis.	Check the setting of the disabling control axis switches (SW2-2/SW2-3/SW2-4).	It is not set as disabled-axis.	Set it as disabled-axis.	[WB]
					It is set as disabled-axis.	Check (2).	
		(2)	An encoder cable was disconnected.	Check if the encoder cable is connected correctly.	It is not connected.	Connect it correctly.	[A] [B] [WB] [RJ010] [GF]
					It is connected.	Check (3).	
		(3)	The parameter setting of communication method is incorrect. [A]: [Pr. PC22] [B] [WB] [RJ010] [GF]: [Pr. PC04]	Check the parameter setting.	The setting is incorrect.	Set it correctly.	
					The setting is correct.	Check (4).	
		(4)	In the parallel drive system, the setting of [Pr. PF40] is incorrect.	Check the parameter setting.	The setting is incorrect.	Set it correctly.	[B]
					The setting is correct.	Check (5).	
		(5)	An encoder cable is malfunctioning.	Check if the encoder cable is disconnected or shorted.	It has a failure.	Replace or repair the cable.	[A] [B] [WB] [RJ010] [GF]
					It has no failure.	Check (6).	
		(6)	When you use a linear servo motor with an A/B/Z-phase differential output linear encoder, the connection with the linear encoder is incorrect.	Check if the wiring of the linear encoder is correct. (Check if it is wired to PSEL.)	The wiring is incorrect.	Wire it correctly.	[A] [B] [GF]
					The wiring is correct.	Check (7).	
		(7)	The voltage of the control circuit power supply has been unstable.	Check the voltage of the control circuit power supply.	An instantaneous power failure is occurring at the control circuit power supply.	Review the power and related parts.	[A] [B] [WB] [RJ010] [GF]
					It has no failure.	Check (8).	
		(8)	The servo amplifier is malfunctioning.	Replace the servo amplifier, and then check the repeatability.	It is not repeatable.	Replace the servo amplifier.	
					It is repeatable.	Check (9).	
		(9)	An encoder is malfunctioning.	Replace the servo motor, and then check the repeatability.	It is not repeatable.	Replace the servo motor.	
					It is repeatable.	Check (10).	
		(10)	Something near the device caused it.	Check the noise, ambient temperature, vibration, etc.	There is a problem in the surrounding.	Take countermeasures against its cause.	
16.4	Encoder initial communication - Encoder malfunction	(1)	An encoder is malfunctioning.	Replace the servo motor, and then check the repeatability.	It is not repeatable.	Replace the servo motor.	[B] [WB]
					It is repeatable.	Check (2).	
		(2)	Something near the device caused it.	Check the noise, ambient temperature, vibration, etc.	There is a problem in the surrounding.	Take countermeasures against its cause.	
16.5	Encoder initial communication - Transmission data error 1	Check it with the check method for [AL. 16.1].					
16.6	Encoder initial communication - Transmission data error 2						
16.7	Encoder initial communication - Transmission data error 3						

Alarm No.: 16		Name: Encoder initial communication error 1					
Alarm content		An error occurred in the communication between an encoder and servo amplifier.					
Detail No.	Detail name	Cause		Check method	Check result	Action	Target
16.8	Encoder initial communication - Incompatible encoder	(1)	A servo motor or linear encoder, which is not compatible with the servo amplifier, was connected.	Check the model of the servo motor/linear encoder.	It is not compatible with the servo amplifier.	Replace it with a compatible one.	[B] [WB]
					It is compatible with the servo amplifier.	Check (2).	
		(2)	The software version of the servo amplifier does not support the servo motor or linear encoder.	Check if the software version supports the servo motor/linear encoder.	It is not compatible.	Replace the servo amplifier to one which software version supports the servo motor/linear encoder.	
					It is compatible.	Check (3).	
		(3)	An encoder is malfunctioning.	Replace the servo motor or linear encoder, and then check the repeatability.	It is not repeatable.	Replace the servo motor or linear encoder.	
					It is repeatable.	Replace the servo amplifier.	
16.A	Encoder initial communication - Process error 1	(1)	The servo amplifier is malfunctioning.	Replace the servo amplifier, and then check the repeatability.	It is not repeatable.	Replace the servo amplifier.	[A] [B] [WB] [RJ010] [GF]
					It is repeatable.	Check (2).	
		(2)	An encoder is malfunctioning.	Replace the servo motor, and then check the repeatability.	It is not repeatable.	Replace the servo motor.	
					It is repeatable.	Check (3).	
		(3)	Something near the device caused it.	Check the noise, ambient temperature, vibration, etc.	There is a problem in the surrounding.	Take countermeasures against its cause.	
16.B	Encoder initial communication - Process error 2	Check it with the check method for [AL. 16.A].					
16.C	Encoder initial communication - Process error 3						
16.D	Encoder initial communication - Process error 4						
16.E	Encoder initial communication - Process error 5						
16.F	Encoder initial communication - Process error 6						

Alarm No.: 17		Name: Board error					
Alarm content		A part in the servo amplifier is malfunctioning.					
Detail No.	Detail name	Cause		Check method	Check result	Action	Target
17.1	Board error 1	(1)	A current detection circuit is malfunctioning.	Check if the alarm occurs during the servo-on status.	It occurs.	Replace the servo amplifier.	[A] [B] [WB] [RJ010] [GF]
					It does not occur.	Check (2).	
		(2)	Something near the device caused it.	Check the noise, ambient temperature, etc.	There is a problem in the surrounding.	Take countermeasures against its cause.	
17.3	Board error 2	Check it with the check method for [AL. 17.1].					

Alarm No.: 17	Name: Board error						
Alarm content	A part in the servo amplifier is malfunctioning.						
Detail No.	Detail name	Cause		Check method	Check result	Action	Target
17.4	Board error 3	(1)	The servo amplifier recognition signal was not read properly.	Disconnect the cables except for the control circuit power supply, and then check the repeatability.	It is repeatable.	Replace the servo amplifier.	[A] [B] [WB] [RJ010] [GF]
					It is not repeatable.	Check (2).	
		(2)	Something near the device caused it.	Check the noise, ambient temperature, etc.	There is a problem in the surrounding.	Take countermeasures against its cause.	
17.5	Board error 4	(1)	The setting value of the axis selection rotary switch (SW1) was not read properly.	Disconnect the cables except for the control circuit power supply, and then check the repeatability.	It is repeatable.	Replace the servo amplifier.	[B] [WB]
					It is not repeatable.	Check (2).	
		(2)	Something near the device caused it.	Check the noise, ambient temperature, etc.	There is a problem in the surrounding.	Take countermeasures against its cause.	
17.6	Board error 5	(1)	The setting value of the control axis setting switch (SW2) was not read properly.	Disconnect the cables except for the control circuit power supply, and then check the repeatability.	It is repeatable.	Replace the servo amplifier.	[B] [WB]
					It is not repeatable.	Check (2).	
		(2)	Something near the device caused it.	Check the noise, ambient temperature, etc.	There is a problem in the surrounding.	Take countermeasures against its cause.	
17.7	Board error 7	Check it with the check method for [AL. 17.4].					
17.8	Board error 6	(1)	Inrush current suppressor circuit is malfunctioning.	Replace the servo amplifier, and then check the repeatability.	It is not repeatable.	Replace the servo amplifier.	[B] [WB]
17.9	Board error 8	(1)	Something near the device caused it.	Check the noise, ambient temperature, etc.	There is a problem in the surrounding.	Take countermeasures against its cause.	[GF]
					There is no problem in the surrounding.	Check (2).	
		(2)	The servo amplifier is malfunctioning.	Replace the servo amplifier, and then check the repeatability.	It is not repeatable.	Replace the servo amplifier.	

Alarm No.: 19	Name: Memory error 3 (Flash-ROM)						
Alarm content	A part (Flash-ROM) in the servo amplifier is failure.						
Detail No.	Detail name	Cause		Check method	Check result	Action	Target
19.1	Flash-ROM error 1	(1)	The Flash-ROM is malfunctioning.	Disconnect the cables except for the control circuit power supply, and then check the repeatability.	It is repeatable.	Replace the servo amplifier.	[A] [B] [WB] [RJ010] [GF]
					It is not repeatable.	Check (2).	
		(2)	Something near the device caused it.	Check the noise, ambient temperature, etc.	There is a problem in the surrounding.	Take countermeasures against its cause.	
19.2	Flash-ROM error 2	Check it with the check method for [AL. 19.1].					
19.3	Flash-ROM error 3						

Alarm No.: 1A		Name: Servo motor combination error					
Alarm content		The combination of servo amplifier and servo motor is incorrect.					
Detail No.	Detail name	Cause		Check method	Check result	Action	Target
1A.1	Servo motor combination error 1	(1)	The servo amplifier and the servo motor was connected incorrectly.	Check the model name of the servo motor and corresponding servo amplifier.	The combination is incorrect.	Use them in the correct combination.	[A] [B] [WB] [RJ010] [GF]
					The combination is correct.	Check (2).	
		(2)	The setting of [Pr. PA01] is not corresponding to the connected servo motor.	Check the [Pr. PA01] setting. Rotary servo motor: "_ _ 0 _" Linear servo motor: "_ _ 4 _" Direct drive motor: "_ _ 6 _"	The combination is incorrect.	Set [Pr. PA01] correctly. When using a linear servo motor, also check (3).	[A] [B] [WB] [GF]
					The combination is correct.	Check (4).	
		(3)	[Pr. PA17] and [Pr. PA18] were not set according to the linear servo motor to be used.	Check if [Pr. PA17] and [Pr. PA18] are set correctly.	It is not set correctly.	Set them correctly according to the linear servo motor to be used.	
		(4)	The software version of the servo amplifier does not support the TM-RG2M/TM-RU2M series direct drive motor.	Check if the software version of the servo amplifier supports the TM-RG2M/TM-RU2M series.	It is C7 or earlier.	Replace the servo amplifier with a one whose software version supports the TM-RG2M/ TM-RU2M series.	
					It is C8 or later.	Check (5).	
		(5)	An encoder is malfunctioning.	Replace the servo motor, and then check the repeatability.	It is not repeatable.	Replace the servo motor.	[A] [B] [WB] [RJ010] [GF]
1A.2	Servo motor control mode combination error	(1)	The setting of [Pr. PA01] is not corresponding to the connected servo motor.	Check the [Pr. PA01] setting. Rotary servo motor: "_ _ 0 _" Linear servo motor: "_ _ 4 _" Direct drive motor: "_ _ 6 _"	The combination is incorrect.	Set [Pr. PA01] correctly.	[A] [B] [WB] [GF]
		(2)	When the fully closed loop control mode is selected, encoders of the servo motor side and the machine side are connected reversely.	Check the connection destination of the encoder.	The connection destination of the encoder is incorrect.	Connect it correctly.	
1A.4	Servo motor combination error 2	(1)	The servo amplifier is malfunctioning.	Replace the servo amplifier, and then check the repeatability.	It is not repeatable.	Replace the servo amplifier.	

Alarm No.: 1B		Name: Converter alarm					
Alarm content		An alarm occurred in the converter unit during the servo-on.					
Detail No.	Detail name	Cause		Check method	Check result	Action	Target
1B.1	Converter unit error	(1)	The protection coordination cable is not correctly connected.	Check the protection coordination cable connection.	It is not connected.	Connect it correctly.	[A] [B]
					It is connected.	Check (2).	
		(2)	An alarm occurred in the converter unit during the servo-on.	Check the alarm of the converter unit, and take the action following the remedies for alarms of the converter unit.			

Alarm No.: 1E		Name: Encoder initial communication error 2					
Alarm content		· An encoder is malfunctioning.					
Detail No.	Detail name	Cause		Check method	Check result	Action	Target
1E.1	Encoder malfunction	(1)	An encoder is malfunctioning.	Replace the servo motor, and then check the repeatability.	It is not repeatable.	Replace the servo motor.	[A] [B] [WB] [RJ010] [GF]
					It is repeatable.	Check (2).	
		(2)	Something near the device caused it.	Check the noise, ambient temperature, vibration, etc.	There is a problem in the surrounding.	Take countermeasures against its cause.	
1E.2	Load-side encoder malfunction	(1)	A load-side encoder is malfunctioning.	Replace the load-side encoder, and then check the repeatability.	It is not repeatable.	Replace the load-side encoder.	[A] [B] [WB] [GF]
					It is repeatable.	Check (2).	
		(2)	Something near the device caused it.	Check the noise, ambient temperature, vibration, etc.	There is a problem in the surrounding.	Take countermeasures against its cause.	

Alarm No.: 1F		Name: Encoder initial communication error 3					
Alarm content		· The connected encoder is not compatible with the servo amplifier.					
Detail No.	Detail name	Cause		Check method	Check result	Action	Target
1F.1	Incompatible encoder	(1)	A servo motor or linear encoder, which is not compatible with the servo amplifier, was connected.	Check the model of the servo motor/linear encoder.	It is not compatible with the servo amplifier.	Replace it with a compatible one.	[A] [B] [WB] [RJ010] [GF]
					It is compatible with the servo amplifier.	Check (2).	
		(2)	The software version of the servo amplifier does not support the servo motor or linear encoder.	Check if the software version supports the servo motor/linear encoder.	It is not compatible.	Replace the servo amplifier to one which software version supports the servo motor/linear encoder.	
					It is compatible.	Check (3).	
		(3)	An encoder is malfunctioning.	Replace the servo motor or linear encoder, and then check the repeatability.	It is not repeatable.	Replace the servo motor or linear encoder.	
					It is repeatable.	Replace the servo amplifier.	
1F.2	Incompatible load-side encoder	(1)	A load-side encoder, which is not compatible with the servo amplifier, was connected.	Check the model of the load-side encoder.	It is not compatible with the servo amplifier.	Use a load-side encoder which is compatible with the servo amplifier.	[A] [B] [WB] [GF]
					It is compatible with the servo amplifier.	Check (2).	
		(2)	The software version of the servo amplifier does not support the load-side encoder.	Check if the software version of the servo amplifier supports the load-side encoder.	It is not compatible.	Replace the servo amplifier to one which software version supports the load-side encoder.	
					It is compatible.	Check (3).	
		(3)	A load-side encoder is malfunctioning.	Replace the load-side encoder, and then check the repeatability.	It is not repeatable.	Replace the load-side encoder.	
					It is repeatable.	Replace the servo amplifier.	

Alarm No.: 20		Name: Encoder normal communication error 1					
Alarm content		An error occurred in the communication between an encoder and servo amplifier.					
Detail No.	Detail name	Cause		Check method	Check result	Action	Target
20.1	Encoder normal communication - Receive data error 1	(1)	An encoder cable is malfunctioning.	Check if the encoder cable is disconnected or shorted. When you use an A/B/Z-phase differential output linear encoder, check the wiring of the linear encoder.	It has a failure.	Repair or replace the cable.	[A] [B] [WB] [RJ010] [GF]
					It has no failure.	Check (2).	
		(2)	The external conductor of the encoder cable is not connected to the ground plate of the connector.	Check if it is connected.	It is not connected.	Connect it correctly.	
					It is connected.	Check (3).	
		(3)	The parameter setting of communication method is incorrect. [A]: [Pr. PC22] [B] [WB] [RJ010] [GF]: [Pr. PC04]	Check the parameter setting.	The setting is incorrect.	Set it correctly.	
					The setting is correct.	Check (4).	
		(4)	In the parallel drive system, the setting of [Pr. PF40] is incorrect.	Check the parameter setting.	The setting is incorrect.	Set it correctly.	
					The setting is correct.	Check (5).	
		(5)	The servo amplifier is malfunctioning.	Replace the servo amplifier, and then check the repeatability.	It is not repeatable.	Replace the servo amplifier.	
					It is repeatable.	Check (6).	
		(6)	An encoder is malfunctioning.	Replace the servo motor or linear encoder, and then check the repeatability.	It is not repeatable.	Replace the servo motor or linear encoder.	
					It is repeatable.	Check (7).	
		(7)	Something near the device caused it.	Check the noise, ambient temperature, vibration, etc.	There is a problem in the surrounding.	Take countermeasures against its cause.	
20.2	Encoder normal communication - Receive data error 2	Check it with the check method for [AL. 20.1].					
20.3	Encoder normal communication - Receive data error 3						

Alarm No.: 20		Name: Encoder normal communication error 1					
Alarm content		An error occurred in the communication between an encoder and servo amplifier.					
Detail No.	Detail name	Cause		Check method	Check result	Action	Target
20.5	Encoder normal communication - Transmission data error 1	(1)	When you use an A/B/Z-phase differential output linear encoder, the wiring of the linear encoder is incorrect.	Check if the A/B-phase pulse signals (PA, PAR, PB, and PBR) of the encoder cable are disconnected or shorted.	It is disconnected or shorted.	Repair the encoder cable.	[A] [B] [GF]
					It is not disconnected or shorted.	Check (2).	
		(2)	An encoder cable is malfunctioning.	Check it with the check method for [AL. 20.1].			[A] [B] [WB] [RJ010] [GF]
		(3)	The external conductor of the encoder cable is not connected to the ground plate of the connector.				
		(4)	When you use an A/B/Z-phase differential output linear encoder, the parameter setting is incorrect.				
		(5)	The servo amplifier is malfunctioning.				
		(6)	An encoder is malfunctioning.				
		(7)	Something near the device caused it.				
20.6	Encoder normal communication - Transmission data error 2	(1)	When you use an A/B/Z-phase differential output linear encoder, the wiring of the linear encoder is incorrect.	Check if the Z-phase pulse signals (PZ/PZR) of the encoder cable are disconnected or shorted.	It is disconnected or shorted.	Repair the encoder cable.	[A] [B] [GF]
					It is not disconnected or shorted.	Check (2).	
		(2)	An encoder cable is malfunctioning.	Check it with the check method for [AL. 20.1].			[A] [B] [WB] [RJ010] [GF]
		(3)	The external conductor of the encoder cable is not connected to the ground plate of the connector.				
		(4)	When you use an A/B/Z-phase differential output linear encoder, the parameter setting is incorrect.				
		(5)	The servo amplifier is malfunctioning.				
		(6)	An encoder is malfunctioning.				
		(7)	Something near the device caused it.				
20.7	Encoder normal communication - Transmission data error 3	Check it with the check method for [AL. 20.1].					
20.9	Encoder normal communication - Receive data error 4						
20.A	Encoder normal communication - Receive data error 5						

Alarm No.: 21	Name: Encoder normal communication error 2						
Alarm content	· The encoder detected an error signal.						
Detail No.	Detail name	Cause		Check method	Check result	Action	Target
21.1	Encoder data error 1	(1)	The encoder detected a high speed/ acceleration rate due to an oscillation or other factors.	Decrease the loop gain, and then check the repeatability.	It is not repeatable.	Use the encoder with low loop gain.	[A] [B] [WB] [RJ010] [GF]
					It is repeatable.	Check (2).	
		(2)	The external conductor of the encoder cable is not connected to the ground plate of the connector.	Check if it is connected.	It is not connected.	Connect it correctly.	
					It is connected.	Check (3).	
		(3)	An encoder is malfunctioning.	Replace the servo motor, and then check the repeatability.	It is not repeatable.	Replace the servo motor.	
					It is repeatable.	Check (4).	
		(4)	Something near the device caused it.	Check the noise, ambient temperature, vibration, etc.	There is a problem in the surrounding.	Take countermeasures against its cause.	
21.2	Encoder data update error	(1)	An encoder is malfunctioning.	Replace the servo motor, and then check the repeatability.	It is not repeatable.	Replace the servo motor.	[A] [B] [WB] [RJ010] [GF]
					It is repeatable.	Check (2).	
		(2)	The external conductor of the encoder cable is not connected to the ground plate of the connector.	Check if it is connected.	It is not connected.	Connect it correctly.	
					It is connected.	Check (3).	
		(3)	Something near the device caused it.	Check the noise, ambient temperature, etc.	There is a problem in the surrounding.	Take countermeasures against its cause.	
21.3	Encoder data waveform error	Check it with the check method for [AL. 21.2].					
21.4	Encoder non-signal error	(1)	A signal of the encoder has not been inputted.	Check if the encoder cable is wired correctly.	It has a failure.	Review the wiring.	[A] [B] [WB] [GF]
					It has no failure.	Check (2).	
		(2)	The external conductor of the encoder cable is not connected to the ground plate of the connector.	Check if it is connected.	It is not connected.	Connect it correctly.	
					It is connected.	Check (3).	
		(3)	Something near the device caused it.	Check the noise, ambient temperature, etc.	There is a problem in the surrounding.	Take countermeasures against its cause.	
21.5	Encoder hardware error 1	Check it with the check method for [AL. 21.2].					
21.6	Encoder hardware error 2						
21.9	Encoder data error 2	Check it with the check method for [AL. 21.1].					

Alarm No.: 24		Name: Main circuit error					
Alarm content		· A ground fault occurred on the servo motor power lines. · A ground fault occurred at the servo motor. · Power supply voltage for inverter circuit control is low. (Only for MR-J4W2-0303B6)					
Detail No.	Detail name	Cause		Check method	Check result	Action	Target
24.1	Ground fault detected by hardware detection circuit	(1)	The servo amplifier is malfunctioning.	Disconnect the servo motor power cables (U/V/W) and check if the alarm occurs.	It occurs.	Replace the servo amplifier.	[A] [B] [WB] [RJ010] [GF]
					It does not occur.	Check (2).	
		(2)	A ground fault or short occurred at the servo motor power cable.	Check if only the servo motor power cable is shorted.	It is shorted.	Replace the servo motor power cable.	
					It is not shorted.	Check (3).	
		(3)	A ground fault occurred at the servo motor.	Disconnect the servo motor power cables on motor side, and check insulation of the motor (between U/V/W/⏚).	It is shorted.	Replace the servo motor.	
					It is not shorted.	Check (4).	
		(4)	The main circuit power supply cable and servo motor power cable were shorted.	Shut off the power, and check if the main circuit power supply cable and servo motor power cable are in contact.	They are in contact.	Correct the wiring.	
					They are not in contact.	Check (5).	
		(5)	Something near the device caused it.	Check the noise, ambient temperature, etc.	There is a problem in the surrounding.	Take countermeasures against its cause.	
24.2	Ground fault detected by software detection function	(1)	For MR-J4W2-0303B6, the servo-on command was inputted when the control circuit power supply voltage was below 20 V.	Check the control circuit power supply voltage when the servo-on command was inputted.	The control circuit power supply voltage was below 20 V.	Input the servo-on command after the control circuit power supply voltage reaches 20 V or higher.	[WB]
					The control circuit power supply voltage was 20 V or higher.	Check (2).	
		(2)	The servo amplifier is malfunctioning.	Disconnect the servo motor power cable (U/V/W), and check if the alarm occurs.	It occurs.	Replace the servo amplifier.	[A] [B] [WB] [RJ010] [GF]
					It does not occur.	Check (3).	
		(3)	A ground fault or short occurred at the servo motor power cable.	Check if only the servo motor power cable is shorted.	It is shorted.	Replace the servo motor power cable.	
					It is not shorted.	Check (4).	
		(4)	A ground fault occurred at the servo motor.	Disconnect the servo motor power cables on motor side, and check insulation between phases (U/V/W/⏚).	It is shorted.	Replace the servo motor.	
					It is not shorted.	Check (5).	
		(5)	The main circuit power supply cable and servo motor power cable were shorted.	Shut off the power, and check if the main circuit power supply cable and servo motor power cable are in contact.	They are in contact.	Correct the wiring.	
					They are not in contact.	Check (6).	
		(6)	Something near the device caused it.	Check the noise, ambient temperature, etc.	There is a problem in the surrounding.	Take countermeasures against its cause.	

Alarm No.: 25		Name: Absolute position erased					
Alarm content		· The absolute position data is faulty. · Power was switched on for the first time in the absolute position detection system. · After the scale measurement encoder was set to the absolute position detection system, the power was switched on for the first time.					
Detail No.	Detail name	Cause		Check method	Check result	Action	Target
25.1	Servo motor encoder - Absolute position erased	(1)	Power was switched on for the first time in the absolute position detection system.	Check if this is the first time you switched on the power in the absolute position detection system.	This is the first time.	Check that the battery is mounted correctly, and make home position return.	[A] [B] [WB] [RJ010] [GF]
					This is not the first time.	Check (2).	
		(2)	1) When an MR-BAT6V1SET(-A) battery or MR-BT6VCASE battery case was used, CN4 of the servo amplifier was disconnected during control circuit power supply off. 2) When an MR-BAT6V1BJ battery for junction battery cable was used, both CN4 of the servo amplifier and MR-BAT6V1BJ battery for junction battery cable were disconnected from the MR-BT6VCBL03M junction battery cable.	Check if the battery was removed in this way when the control circuit power supply was off.	It was removed.	Check that the battery is mounted correctly, and make home position return.	
					It was not removed.	Check (3).	
		(3)	1) When an MR-BAT6V1SET(-A) battery or MR-BT6VCASE battery case was used, the power was turned off with the battery disconnected from CN4. 2) When an MR-BAT6V1BJ battery for junction battery cable was used, the power was turned off with the battery disconnected from CN4 and MR-BT6VCBL03M junction battery cable.	Check if the power was turned off in this state.	It was turned off.	Check that the battery is mounted correctly, and make home position return.	
					It was not turned off.	MR-BAT6V1BJ battery for junction battery cable: Refer to (4). MR-BAT6V1SET(-A) battery or MR-BT6VCASE battery case: Refer to (6).	
		(4)	The encoder cable was disconnected with the MR-BAT6V1BJ battery disconnected from MR-BT6VCBL03M junction battery cable.	Check if the encoder cable was disconnected in this state.	It was disconnected.	Check that the MR-BAT6V1BJ battery is connected to CN4 and MR-BT6VCBL03M junction battery cable, and execute a home position return.	[A] [B] [RJ010] [GF]
					It was not disconnected.	Check (5).	

Alarm No.: 25		Name: Absolute position erased					
Alarm content		· The absolute position data is faulty. · Power was switched on for the first time in the absolute position detection system. · After the scale measurement encoder was set to the absolute position detection system, the power was switched on for the first time.					
Detail No.	Detail name	Cause		Check method	Check result	Action	Target
25.1	Servo motor encoder - Absolute position erased	(5)	The MR-BT6VCBL03M junction battery cable is not connected to the encoder cable.	Check if the MR-BT6VCBL03M junction battery cable is connected to the encoder cable.	It is not connected.	Connect the MR-BT6VCBL03M junction battery cable to the encoder cable	[A] [B] [RJ010] [GF]
					It is connected.	Check (6).	
		(6)	The battery voltage is low. The battery is consumed.	Check the battery voltage with a tester. When an MR-BAT6V1BJ battery for junction battery cable was used, check the voltage of the connector (orange) for servo amplifier.	It is less than 3 V DC.	Replace the battery.	[A] [B] [WB] [RJ010] [GF]
					It is 3 V DC or more.	Check (7).	
		(7)	The voltage has dropped greatly in the encoder cable wired to the battery.	Check if a recommended cable is used for the encoder cable.	It is not used.	Use a recommended wire.	
					It is used.	Check (8).	
		(8)	A battery cable is malfunctioning.	Check for the loose connection with a tester.	It has a failure.	Replace the battery cable.	
					It has no failure.	Check (9).	
		(9)	There is a loose connection of the encoder cable on the servo motor side.	Check for the loose connection with a tester. Measure the voltage on the servo motor side.	It has a failure.	Repair or replace the encoder cable.	
					It has no failure.	Check (10).	
		(10)	The absolute position storage unit was not connected for using a direct drive motor.	Check if the absolute position storage unit is connected correctly.	It is not connected.	Connect the absolute position storage unit correctly.	[A] [B] [WB] [GF]
					It is connected.	Check (11).	
		(11)	The servo amplifier is malfunctioning.	Replace the servo amplifier, and then check the repeatability.	It is not repeatable.	Replace the servo amplifier.	[A] [B] [WB] [RJ010] [GF]
					It is repeatable.	Check (12).	
		(12)	An encoder is malfunctioning.	Replace the servo motor, and then check the repeatability.	It is not repeatable.	Replace the servo motor.	

Alarm No.: 25		Name: Absolute position erased					
Alarm content		· The absolute position data is faulty. · Power was switched on for the first time in the absolute position detection system. · After the scale measurement encoder was set to the absolute position detection system, the power was switched on for the first time.					
Detail No.	Detail name	Cause		Check method	Check result	Action	Target
25.2	Scale measurement encoder - Absolute position erased	(1)	After the scale measurement encoder was set to the absolute position detection system, the power was switched on for the first time.	Check if this is the first time to switch on the power after the scale measurement encoder was set to the absolute position detection system.	This is the first time.	Check that the battery is mounted correctly, and make home position return.	[B] [WB] [GF]
					This is not the first time.	Check (2).	
		(2)	The battery was removed (replaced) when the control circuit power supply was off.	Check if the battery was removed when the control circuit power supply was off.	It was removed.	Check that the battery is mounted correctly, and make home position return.	
					It was not removed.	Check (3).	
		(3)	The power was turned off with the battery disconnected from CN4.	Check if the power was turned off in this state.	It was turned off.	Check that the battery is mounted correctly, and make home position return.	
					It was not turned off.	Check (4).	
		(4)	The battery voltage is low. The battery is consumed.	Check the battery voltage with a tester.	It is less than 3 V DC.	Replace the battery.	
					It is 3 V DC or more.	Check (5).	
		(5)	The voltage has dropped greatly in the encoder cable wired to the battery.	Check if a recommended cable is used for the encoder cable.	It is not used.	Use a recommended wire.	
					It is used.	Check (6).	
		(6)	A battery cable is malfunctioning.	Check for the loose connection with a tester.	It has a failure.	Replace the battery cable.	
					It has no failure.	Check (7).	
		(7)	There is a loose connection of the encoder cable on the scale measurement encoder side.	Check for the loose connection with a tester. Measure the voltage on the scale measurement encoder side.	It has a failure.	Repair or replace the encoder cable.	
					It has no failure.	Check (8).	
		(8)	The servo amplifier is malfunctioning.	Replace the servo amplifier, and then check the repeatability.	It is not repeatable.	Replace the servo amplifier.	
					It is repeatable.	Check (9).	
		(9)	The scale measurement encoder is malfunctioning.	Replace the scale measurement encoder, and then check the repeatability.	It is not repeatable.	Replace the scale measurement encoder.	

Alarm No.: 27		Name: Initial magnetic pole detection error					
Alarm content		· The initial magnetic pole detection was not completed properly.					
Detail No.	Detail name	Cause		Check method	Check result	Action	Target
27.1	Magnetic pole detection - Abnormal termination	(1)	A moving part collided against the machine.	Check if it collided.	It collided.	Move the start position of the magnetic pole detection.	[A] [B] [WB] [GF]
					It did not collided.	Check (2).	
		(2)	The wiring of the servo motor power cable is incorrect.	Check if the wiring of the servo motor power cable is correct.	It has a failure.	Correct the wiring.	
					It has no failure.	Check (3).	
		(3)	The linear encoder resolution setting differs from the setting value.	Check the setting of [Pr. PL02] and [Pr. PL03].	The setting is incorrect.	Set it correctly.	
					The setting is correct.	Check (4).	
		(4)	The direction of mounting linear encoder is incorrect.	Check polarities of the linear encoder and the linear servo motor.	The mounting direction is incorrect.	Mount it correctly. Review the "encoder pulse count polarity selection" setting of the parameter as required. [A]: [Pr. PC45] [B] [WB] [GF]: [Pr. PC27]	
					The mounting direction is correct.	Check (5).	
		(5)	An excitation level of the magnetic pole detection voltage level is small.	Check if the travel distance during the magnetic pole detection is too short (for a position detection method).	It is too short.	Increase it with the [Pr. PL09] setting.	
				Check if the travel distance during the magnetic pole detection is too long or if a vibration is occurring (for a minute position detection method).	The travel distance is too long or a vibration is occurring.	Review the [Pr. PL17] setting.	
27.2	Magnetic pole detection - Time out error	(1)	Servo-on was enabled when the primary side of linear servo motor or rotor of direct drive motor did not stop.	Check if servo-on was enabled when the motor did not stop.	Servo-on was enabled when the motor did not stop.	Stop the linear servo motor and the direct drive motor, and enable servo-on again.	
					Servo-on was enabled when the motor stopped.	Check (2).	
		(2)	Only one of the limit switches is on during magnetic pole detection.	Check the limit switches.	It has a failure.	Remove the cause. Move the start position of the magnetic pole detection.	
					It has no failure.	Check (3).	
		(3)	The magnetic pole detection voltage level is small.	Check if the travel distance during the magnetic pole detection is too short (for a position detection method).	It is too short.	Increase it with the [Pr. PL09] setting.	

Alarm No.: 27	Name: Initial magnetic pole detection error						
Alarm content	· The initial magnetic pole detection was not completed properly.						
Detail No.	Detail name	Cause		Check method	Check result	Action	Target
27.3	Magnetic pole detection - Limit switch error	(1)	Both of the limit switches are off during the magnetic pole detection.	Check the limit switches.	Both of them are off.	Turn on the limit switches. When using a direct drive motor, also check (2).	[A] [B] [WB] [GF]
		(2)	When using a direct drive motor in a system where the motor rotates one revolution or more, the following stroke limit signals are not enabled with a parameter. [A]: LSP and LSN [B] [WB]: FLS and RLS [GF]: LSP and LSN (FLS and RLS from the controller)	Check the [Pr. PL08] setting.	The [Pr. PL08] setting is "_ 0 _ _".	Set the [Pr. PL08] setting to "_ 1 _ _".	
27.4	Magnetic pole detection - Estimated error	Check it with the check method for [AL. 27.1].					
27.5	Magnetic pole detection - Position deviation error						
27.6	Magnetic pole detection - Speed deviation error						
27.7	Magnetic pole detection - Current error						

Alarm No.: 28	Name: Linear encoder error 2						
Alarm content	· Working environment of linear encoder is not normal.						
Detail No.	Detail name	Cause		Check method	Check result	Action	Target
28.1	Linear encoder - Environment error	(1)	The ambient temperature of the linear encoder is out of specifications.	Check the ambient temperature of the linear encoder.	It is out of specifications.	Lower the temperature. Contact the linear encoder manufacturer.	[A] [B] [WB] [GF]
					It is within specifications.	Check (2).	
		(2)	The signal level of the linear encoder has dropped.	Check the mounting condition of the linear encoder.	It has a failure.	Correct the mounting method of the linear encoder.	

Alarm No.: 2A		Name: Linear encoder error 1					
Alarm content		· An error of the linear encoder was detected. (The details vary depending on the linear encoder manufacturer.)					
Detail No.	Detail name	Cause		Check method	Check result	Action	Target
2A.1	Linear encoder error 1-1	(1)	Mounting condition of the linear encoder and head is failure.	Adjust the positions of the scale and head, and then check the repeatability.	It is not repeatable.	Use the equipment at the adjusted position.	[A] [B] [WB] [GF]
					It is repeatable.	Check (2).	
		(2)	The external conductor of the encoder cable is not connected to the ground plate of the connector.	Check if it is connected.	It is not connected.	Connect it correctly.	
					It is connected.	Check (3).	
		(3)	Something near the device caused it.	Check the noise, ambient temperature, vibration, etc.	There is a problem in the surrounding.	Take countermeasures against its cause.	
					There is no problem in the surrounding.	Check (4).	
		(4)	An alarm of the linear encoder was detected.	Check the content of the alarm detail list of the Linear Encoder Instruction Manual.	Remove its cause described in the instruction manual.	Contact each encoder manufacturer for how to deal with it.	
2A.2	Linear encoder error 1-2	Check it with the check method for [AL. 2A.1].					
2A.3	Linear encoder error 1-3						
2A.4	Linear encoder error 1-4						
2A.5	Linear encoder error 1-5						
2A.6	Linear encoder error 1-6						
2A.7	Linear encoder error 1-7						
2A.8	Linear encoder error 1-8						

Alarm No.: 2B		Name: Encoder counter error					
Alarm content		· Data which encoder created is failure.					
Detail No.	Detail name	Cause		Check method	Check result	Action	Target
2B.1	Encoder counter error 1	(1)	An encoder cable is malfunctioning.	Check if the encoder cable is disconnected or shorted.	It has a failure.	Repair or replace the cable.	[A] [B] [WB] [GF]
					It has no failure.	Check (2).	
		(2)	The external conductor of the encoder cable is not connected to the ground plate of the connector.	Check if it is connected.	It is not connected.	Connect it correctly.	
					It is connected.	Check (3).	
		(3)	Something near the device caused it.	Check the noise, ambient temperature, vibration, etc.	There is a problem in the surrounding.	Take countermeasures against its cause.	
					There is no problem in the surrounding.	Check (4).	
		(4)	An encoder is malfunctioning.	Replace the direct drive motor, and then check the repeatability.	It is not repeatable.	Replace the direct drive motor.	
2B.2	Encoder counter error 2	Check it with the check method for [AL. 2B.1].					

Alarm No.: 30		Name: Regenerative error					
Alarm content		· Permissible regenerative power of the built-in regenerative resistor or regenerative option is exceeded. · A regenerative transistor in the servo amplifier is malfunctioning.					
Detail No.	Detail name	Cause		Check method	Check result	Action	Target
30.1	Regeneration heat error	(1)	The setting of the regenerative resistor (regenerative option) is incorrect.	Check the regenerative resistor (regenerative option) and [Pr. PA02] setting.	The setting value is incorrect.	Set it correctly.	[A] [B] [WB] [RJ010] [GF]
					It is set correctly.	Check (2).	
		(2)	The regenerative resistor (regenerative option) is not connected.	Check if the regenerative resistor (regenerative option) is connected correctly.	It is not connected correctly.	Connect it correctly.	
					It is connected correctly.	Check (3).	
		(3)	The combination of regenerative resistor (regenerative option) and servo amplifier is incorrect.	Check if the regenerative resistor (regenerative option) and the servo amplifier are connected in the specified combination.	The combination is incorrect.	Use them in the correct combination.	
					The combination is correct.	Check (4).	
		(4)	The power supply voltage is high.	Check if the voltage of the input power supply is over the prescribed value. 200 V class: 264 V AC 400 V class: 528 V AC 100 V class: 132 V AC 48 V DC setting: 70 V DC 24 V DC setting: 50 V DC	It is higher than the prescribed value.	Reduce the power supply voltage.	
					It is at the prescribed value or lower.	Check (5).	
		(5)	The regenerative load ratio exceeded 100%.	Check the regenerative load ratio when alarm occurs.	It is 100% or more.	Reduce the frequency of positioning. Increase the deceleration time constant. Reduce the load. Use a regenerative option if it is not being used. Review the regenerative option capacity. For MR-J4-03A6(-RJ) and MR-J4W2-0303B6, check if the main circuit power supply voltage is 48 V DC even though the setting is 24 V DC.	
30.2	Regeneration signal error	(1)	A detection circuit of the servo amplifier is malfunctioning.	Check if the regenerative resistor (regenerative option) is overheating.	It is overheating abnormally.	Replace the servo amplifier.	
30.3	Regeneration feedback signal error	(1)	A detection circuit of the servo amplifier is malfunctioning.	Remove the regenerative option or built-in regenerative resistor, and then check if the alarm occurs at power on. For MR-J4-03A6(-RJ) and MR-J4W2-0303B, check if the alarm occurs at power on.	The alarm occurs.	Replace the servo amplifier.	
					The alarm does not occur.	Check (2).	
		(2)	Something near the device caused it.	Check the noise, ground fault, ambient temperature, etc.	There is a problem in the surrounding.	Take countermeasures against its cause.	

Alarm No.: 31		Name: Overspeed					
Alarm content		· The servo motor speed has exceeded the instantaneous permissible speed. · The linear servo motor speed has exceeded the instantaneous permissible speed.					
Detail No.	Detail name	Cause		Check method	Check result	Action	Target
31.1	Abnormal motor speed	(1)	The command pulse frequency is high.	Check the command pulse frequency.	The command pulse frequency is high.	Check operation pattern.	[A]
					The command pulse frequency is low.	Check (2).	
		(2)	The settings of the electronic gear are incorrect.	Check the setting value of the electronic gear.	The setting value is incorrect.	Review the settings.	
					The setting value is correct.	Check (5).	
		(3)	The command from the controller is excessive.	Check if the command from the controller is over the permissible speed.	It is over the permissible speed.	Check operation pattern.	[B] [WB] [RJ010] [GF]
					It is less than the permissible speed.	Check (4).	
		(4)	A larger speed command than the overspeed alarm level was inputted.	Check that the actual servo motor speed is higher than the setting value of [Pr. PC08 Overspeed alarm detection level].	The servo motor speed is higher than the overspeed alarm detection level.	Review the [Pr. PC08] setting.	
					The servo motor speed is lower than the overspeed alarm detection level.	Check (5).	
		(5)	The servo motor was at the maximum torque (maximum thrust) at the time of acceleration.	Check if the torque (thrust) at the time of acceleration is the maximum torque (maximum thrust).	It is the maximum torque (maximum thrust).	Increase the acceleration/deceleration time constant. Or reduce the load.	[A] [B] [WB] [RJ010] [GF]
					It is less than the maximum torque (maximum thrust).	Check (6).	
		(6)	The servo system is unstable and oscillating.	Check if the servo motor is oscillating.	It is oscillating.	Adjust the servo gain. Or reduce the load.	
					It is not oscillating.	Check (7).	
		(7)	The velocity waveform has overshot.	Check if it is overshooting because the acceleration time constant is too short.	It is overshooting.	Increase the acceleration/deceleration time constant.	
					It is not overshooting.	Check (8).	
		(8)	For MR-J4-03A6(-RJ) and MR-J4W2-0303B6, the speed has overshot when the power was restored from a temporary bus voltage drop during an operation.	Check if a bus voltage drops temporarily during an operation.	The bus voltage has dropped.	Review the capacity of the 24 V DC main circuit power supply. Increase the voltage of the 24 V DC main circuit power supply within the permissible voltage fluctuation range. Change the main circuit input voltage to 48 V DC. Check operation pattern.	[A] [WB]
					The bus voltage has not dropped.	Check (9).	
		(9)	The connection destination of the encoder cable is incorrect.	Check the connection destinations of CN2A, CN2B, and CN2C.	It is not correct.	Wire it correctly.	[WB]
					It is correct.	Check (10).	
		(10)	The connection of the servo motor is incorrect.	Check the wiring of U/V/W.	It is incorrect.	Set it correctly.	[A] [B] [WB] [RJ010] [GF]
					It is correct.	Check (11).	
		(11)	The encoder or linear encoder is malfunctioning.	Check if the alarm is occurring during less than instantaneous permissible speed.	It is occurring during less than instantaneous permissible speed.	Replace the servo motor or linear encoder.	

Alarm No.: 32		Name: Overcurrent					
Alarm content		A current higher than the permissible current was applied to the servo amplifier.					
Detail No.	Detail name	Cause		Check method	Check result	Action	Target
32.1	Overcurrent detected at hardware detection circuit (during operation)	(1)	The servo amplifier is malfunctioning.	Disconnect the servo motor power cables (U/V/W) and check if the alarm occurs.	It occurs.	Replace the servo amplifier.	[A] [B] [WB] [RJ010] [GF]
					It does not occur.	Check (2).	
		(2)	A ground fault or short occurred at the servo motor power cable.	Check if only the servo motor power cable is shorted.	It is shorted.	Replace the servo motor power cable.	
					It is not shorted.	Check (3).	
		(3)	The servo motor is malfunctioning.	Disconnect the servo motor power cables on motor side, and check insulation of the motor (between U/V/W/⏚/⏚).	A ground fault is occurring.	Replace the servo motor.	
					A ground fault is not occurring.	Check (4).	
		(4)	The dynamic brake is malfunctioning.	Check if the alarm occurs when you turn on the servo-on command.	It occurs.	Replace the servo amplifier.	
					It does not occur.	[WB]: Check (5). [A] [B] [RJ010] [GF]: Check (7).	
		(5)	The connection destination of the encoder cable is incorrect.	Check the connection destinations of CN2A, CN2B, and CN2C.	It is not correct.	Wire it correctly.	[WB]
					It is correct.	Check (6).	
		(6)	Something near the device caused it.	Check the noise, ambient temperature, etc.	There is a problem in the surrounding.	Take countermeasures against its cause.	
		(7)	Something near the device caused it.	Check the noise, ambient temperature, etc.	There is a problem in the surrounding.	Take countermeasures against its cause.	[A] [B] [RJ010] [GF]
					There is no problem in the surrounding.	Check it with the check method for [AL. 45.1].	
32.2	Overcurrent detected at software detection function (during operation)	(1)	The servo gain is high.	Check if an oscillation is occurring.	An oscillation is occurring.	Reduce the speed loop gain ([Pr. PB09]). For MR-J4-03A6(-RJ) and MR-J4W2-0303B6, check if the main circuit power supply voltage is 48 V DC even though the setting is 24 V DC.	[A] [B] [WB] [RJ010] [GF]
					An oscillation is not occurring.	Check (2).	
		(2)	The servo amplifier is malfunctioning.	Disconnect the servo motor power cables (U/V/W) and check if the alarm occurs.	It occurs.	Replace the servo amplifier.	
					It does not occur.	Check (3).	
		(3)	A ground fault or short occurred at the servo motor power cable.	Check if only the servo motor power cable is shorted.	It is shorted.	Replace the servo motor power cable.	
					It is not shorted.	Check (4).	
		(4)	The servo motor is malfunctioning.	Disconnect the servo motor power cables on motor side, and check insulation of the motor (between U/V/W/⏚/⏚).	A ground fault is occurring.	Replace the servo motor.	
					A ground fault is not occurring.	Check (5).	
		(5)	The connection destination of the encoder cable is incorrect.	Check the connection destinations of CN2A, CN2B, and CN2C.	It is not correct.	Connect it correctly.	[WB]
					It is correct.	Check (6).	
		(6)	Something near the device caused it.	Check the noise, ambient temperature, etc.	There is a problem in the surrounding.	Take countermeasures against its cause.	[A] [B] [WB] [RJ010] [GF]

Alarm No.: 32		Name: Overcurrent				
Alarm content		· A current higher than the permissible current was applied to the servo amplifier.				
Detail No.	Detail name	Cause	Check method	Check result	Action	Target
32.3	Overcurrent detected at hardware detection circuit (during a stop)	Check it with the check method for [AL. 32.1].				
32.4	Overcurrent detected at software detection function (during a stop)	Check it with the check method for [AL. 32.2].				

Alarm No.: 33		Name: Overvoltage					
Alarm content		· The value of the bus voltage exceeded the prescribed value. 200 V class: 400 V DC 400 V class: 800 V DC 100 V class: 400 V DC 48 V DC setting: 75 V DC 24 V DC setting: 55 V DC					
Detail No.	Detail name	Cause		Check method	Check result	Action	Target
33.1	Main circuit voltage error	(1)	The setting of the regenerative resistor (regenerative option) is incorrect.	Check the regenerative resistor (regenerative option) and [Pr. PA02] setting.	The setting value is incorrect.	Set it correctly.	[A] [B] [WB] [RJ010] [GF]
					It is set correctly.	Check (2).	
		(2)	The regenerative resistor (regenerative option) is not connected.	Check if the regenerative resistor (regenerative option) is connected correctly.	It is not connected correctly.	Connect it correctly.	
					It is connected correctly.	Check (3).	
		(3)	Wire breakage of built-in regenerative resistor or regenerative option	Measure the resistance of the built-in regenerative resistor or regenerative option.	The resistance is abnormal.	When using a built-in regenerative resistor, replace the servo amplifier. When using a regenerative option, replace the regenerative option.	
					The resistance is normal.	Check (4).	
		(4)	The regeneration capacity is insufficient.	Set a longer deceleration time constant, and then check the repeatability.	It is not repeatable.	When using a built-in regenerative resistor, use a regenerative option. When using a regenerative option, use a larger capacity one.	
					It is repeatable.	Check (5).	
		(5)	Power supply voltage high.	Check if the voltage of the input power supply is over the prescribed value. 200 V class: 264 V AC 400 V class: 528 V AC 100 V class: 132 V AC 48 V DC setting: 75 V DC 24 V DC setting: 55 V DC	It is higher than the prescribed value.	Reduce the power supply voltage.	
					It is at the prescribed value or lower.	Check (6).	
		(6)	Something near the device caused it.	Check the noise, ambient temperature, etc.	There is a problem in the surrounding.	Take countermeasures against its cause.	

Alarm No.: 34		Name: SSCNET receive error 1					
Alarm content		An error occurred in SSCNET III/H communication. (continuous communication error with 3.5 ms interval)					
Detail No.	Detail name	Cause		Check method	Check result	Action	Target
34.1	SSCNET receive data error	(1)	The SSCNET III cable was disconnected.	Check the SSCNET III cable connection.	It is disconnected.	Turn off the control circuit power supply of the servo amplifier, and then connect the SSCNET III cable.	[B] [WB]
					It is connected.	Check (2).	
		(2)	The surface at the end of SSCNET III cable got dirty.	Wipe off the dirt from the cable tip, and then check the repeatability.	It is not repeatable.	Take measure to keep the cable tip clean.	
					It is repeatable.	Check (3).	
		(3)	The SSCNET III cable is broken or severed.	Check if the SSCNET III cable is malfunctioning.	It has a failure.	Replace the SSCNET III cable.	
					It has no failure.	Check (4).	
		(4)	A vinyl tape is stacked to the SSCNET III cable. Or a wire insulator containing migrating plasticizer is adhered to the cable.	Check if a vinyl tape is used. Check if the cable is contacting with other cables.	It is used. They are in contact.	Take countermeasures against its cause.	
					It is not used. They are not in contact.	Check (5).	
		(5)	The servo amplifier is malfunctioning.	Replace the servo amplifier, and then check the repeatability.	It is not repeatable.	Replace the servo amplifier.	
					It is repeatable.	Check (6).	
		(6)	The previous or next axis servo amplifier of the alarm occurred is malfunctioning.	Replace the previous and next servo amplifier of the axis alarm occurred, and then check the repeatability.	It is not repeatable.	Replace the servo amplifier.	
					It is repeatable.	Check (7).	
		(7)	The controller is malfunctioning.	Replace the controller, and then check the repeatability.	It is not repeatable.	Replace the controller.	
					It is repeatable.	Check (8).	
		(8)	Something near the device caused it.	Check the noise, ambient temperature, etc.	There is a problem in the surrounding.	Take countermeasures against its cause.	
34.2	SSCNET connector connection error	Check it with the check method for [AL. 34.1].					
34.3	SSCNET communication data error						
34.4	Hardware error signal detection						
34.5	SSCNET receive data error (safety observation function)						
34.6	SSCNET communication data error (safety observation function)						

Alarm No.: 35		Name: Command frequency error					
Alarm content		Input pulse frequency of command pulse is too high.					
Detail No.	Detail name	Cause		Check method	Check result	Action	Target
35.1	Command frequency error	(1)	The command pulse frequency is high.	Check the command pulse frequency.	The command pulse frequency is high.	Check operation pattern.	[A]
					The command pulse frequency is low.	Check (2).	
		(2)	The setting of "Command input pulse train filter selection" in [Pr. PA13] is not correct.	Check if the command pulse frequency is within the setting range of the filter.	It is out of setting range.	Review the filter setting.	
					It is within the setting range.	Check (6).	
		(3)	Inputted frequency with a manual pulse generator is high.	Check the inputted frequency of the manual pulse generator.	The command pulse frequency is high.	Reduce the inputted frequency of the manual pulse generator.	
					The command pulse frequency is low.	Check (6).	
		(4)	The command from the controller is excessive.	Check if the command from the controller is the permissible speed or higher.	It is the permissible speed or higher.	Check operation pattern.	[B] [WB] [RJ010] [GF]
					It is lower than the permissible speed.	Check (5).	
		(5)	The controller is malfunctioning.	Replace the controller, and then check the repeatability.	It is not repeatable.	Replace the controller.	
					It is repeatable.	Check (6).	
		(6)	The command pulse frequency is high when the synchronous encoder axis is selected.	Check the command pulse frequency.	The command pulse frequency is high.	Check operation pattern.	[GF]
					The command pulse frequency is low.	Check (7).	
		(7)	Something near the device caused it.	Check the noise, ambient temperature, etc.	There is a problem in the surrounding.	Take countermeasures against its cause.	[A] [B] [WB] [RJ010] [GF]

Alarm No.: 36		Name: SSCNET receive error 2					
Alarm content		· An error occurred in SSCNET III/H communication. (intermittent communication error with about 70 ms interval)					
Detail No.	Detail name	Cause		Check method	Check result	Action	Target
36.1	Continuous communication data error	(1)	The SSCNET III cable was disconnected.	Check the SSCNET III cable connection.	It is disconnected.	Turn off the control circuit power supply of the servo amplifier, and then connect the SSCNET III cable.	[B] [WB]
					It is connected.	Check (2).	
		(2)	The surface at the end of SSCNET III cable got dirty.	Wipe off the dirt from the cable tip, and then check the repeatability.	It is not repeatable.	Take measure to keep the cable tip clean.	
					It is repeatable.	Check (3).	
		(3)	The SSCNET III cable is broken or severed.	Check if the SSCNET III cable is malfunctioning.	It has a failure.	Replace the SSCNET III cable.	
					It has no failure.	Check (4).	
		(4)	A vinyl tape is stacked to the SSCNET III cable. Or a wire insulator containing migrating plasticizer is adhered to the cable.	Check if a vinyl tape is used. Check if the cable is contacting with other cables.	It is used. They are in contact.	Take countermeasures against its cause.	
					It is not used. They are not in contact.	Check (5).	
		(5)	The servo amplifier is malfunctioning.	Replace the servo amplifier, and then check the repeatability.	It is not repeatable.	Replace the servo amplifier.	
					It is repeatable.	Check (6).	
		(6)	The previous or next axis servo amplifier of the alarm occurred is malfunctioning.	Replace the previous and next servo amplifier of the axis alarm occurred, and then check the repeatability.	It is not repeatable.	Replace the servo amplifier.	
					It is repeatable.	Check (7).	
		(7)	The controller is malfunctioning.	Replace the controller, and then check the repeatability.	It is not repeatable.	Replace the controller.	
					It is repeatable.	Check (8).	
		(8)	Something near the device caused it.	Check the noise, ambient temperature, etc.	There is a problem in the surrounding.	Take countermeasures against its cause.	
36.2	Continuous communication data error (safety observation function)	Check it with the check method for [AL. 36.1].					

Alarm No.: 37		Name: Parameter error					
Alarm content		· Parameter setting is incorrect. · Point table setting is incorrect.					
Detail No.	Detail name	Cause		Check method	Check result	Action	Target
37.1	Parameter setting range error	(1)	A parameter was set out of setting range.	Check the parameter error No. and setting value.	It is out of setting range.	Set it within the range.	[A] [B] [WB] [RJ010] [GF]
					It is within the setting range.	Check (2).	
		(2)	A parameter setting contradicts another.	Check the parameter error No. and setting value.	A setting value is incorrect.	Correct the setting value.	
					A setting value is correct.	Check (3).	
		(3)	The parameter setting has changed due to a servo amplifier malfunction.	Replace the servo amplifier, and then check the repeatability.	It is not repeatable.	Replace the servo amplifier.	
37.2	Parameter combination error	(1)	A parameter setting contradicts another.	Check the parameter error No. and setting value.	A setting value is incorrect.	Correct the setting value. (When the master-slave function is set, also check (2).)	
		(2)	[Pr. PA01] on the master side was set to other than "standard control mode" or "fully closed loop control mode".	Check the parameter setting.	[Pr. PA01] is set to other than "standard control mode" or "fully closed loop control mode".	Set [Pr. PA01] to "standard control mode" or "fully closed loop control mode".	[B] (master)
					[Pr. PA01] is set to "standard control mode" or "fully closed loop control mode".	Check (4).	
		(3)	[Pr. PA01] on the slave side was set to other than "standard control mode".	Check the parameter setting.	[Pr. PA01] is set to other than "standard control mode".	Set [Pr. PA01] to "standard control mode".	[B] (slave)
					[Pr. PA01] is set to "standard control mode".	Check (4).	
		(4)	"Forced stop deceleration function selection" in [Pr. PA04] is enabled.	Check the parameter setting.	"Forced stop deceleration function selection" setting in [Pr. PA04] is enabled.	Disable "forced stop deceleration function selection" in [Pr. PA04].	[B] (master) (slave)
37.3	Point table setting error	(1)	The setting of point tables is incorrect.	Check if the setting of point tables is within the setting range. Check the parameter error No. and point table error No. with the point table error No. display on the display of the servo amplifier. Or check the setting value with the point table display of MR Configurator2.	A setting value is incorrect.	Correct the setting value.	[A] [GF]
					A setting value is correct.	Check (2).	
		(2)	A point table setting has changed due to a servo amplifier malfunction.	Replace the servo amplifier, and then check the repeatability.	It is not repeatable.	Replace the servo amplifier.	

Alarm No.: 39		Name: Program error					
Alarm content		· A program used for the program operation is incorrect.					
Detail No.	Detail name	Cause		Check method	Check result	Action	Target
39.1	Program error	(1)	A checksum of the program did not match at power-on. (The program has an error.)	Check if an error occurred (such as entered noise, power-off) at program write.	It has a failure.	Rewrite the program.	[A]
					It has no failure.	Check (2).	
		(2)	A program has changed due to a servo amplifier malfunction.	Replace the servo amplifier, and then check the repeatability.	It is not repeatable.	Replace the servo amplifier.	
39.2	Instruction argument external error	(1)	A program has never been written since program initialization.	Check if a program was written.	It was not executed.	Write the program.	
					It was executed.	Check (2).	
		(2)	A command argument is using a value out of specifications.	Check if the command description has a failure.	It has a failure.	Correct the command description.	
					It has no failure.	Check (3).	
		(3)	A program has changed due to a servo amplifier malfunction.	Replace the servo amplifier, and then check the repeatability.	It is not repeatable.	Replace the servo amplifier.	
39.3	Register No. error	(1)	A specified number of the general purpose register used for a command is a value out of specifications.	Check if the command description has a failure.	It has a failure.	Correct the command description.	
					It has no failure.	Check (2).	
		(2)	A program has changed due to a servo amplifier malfunction.	Replace the servo amplifier, and then check the repeatability.	It is not repeatable.	Replace the servo amplifier.	
39.4	Non-correspondence instruction error	(1)	A used command is not correspondent to the program.	Check if the command description has a failure.	It has a failure.	Correct the command description.	
					It has no failure.	Check (2).	
		(2)	A program has changed due to a servo amplifier malfunction.	Replace the servo amplifier, and then check the repeatability.	It is not repeatable.	Replace the servo amplifier.	

Alarm No.: 3A		Name: Inrush current suppression circuit error					
Alarm content		· The inrush current suppression circuit error was detected.					
Detail No.	Detail name	Cause		Check method	Check result	Action	Target
3A.1	Inrush current suppression circuit error	(1)	Inrush current suppressor circuit is malfunctioning.	Replace the servo amplifier, and then check the repeatability.	It is not repeatable.	Replace the servo amplifier.	[A] [B] [WB] [RJ010] [GF]

Alarm No.: 3D		Name: Parameter setting error for driver communication					
Alarm content		· The control parameter setting value for driver communication is incorrect.					
Detail No.	Detail name	Cause		Check method	Check result	Action	Target
3D.1	Parameter combination error for driver communication on slave	(1)	The master transmit data selection for driver communication is not set correctly.	Check the settings of [Pr. PD16] and [Pr. PD17] on the master side.	The setting is incorrect.	Set it correctly.	[B] (slave)
3D.2	Parameter combination error for driver communication on master	Check it with the check method for [AL. 3D.1].					[B] (master)

Alarm No.: 3E		Name: Operation mode error					
Alarm content		· The operation mode setting was changed.					
Detail No.	Detail name	Cause		Check method	Check result	Action	Target
3E.1	Operation mode error	(1)	The MR-J4 servo amplifier used in J3 compatibility mode was connected to the other SSCNET Ⅲ/H controller. Or an MR-J4 servo amplifier which was connected to SSCNET Ⅲ/H controller was connected to another SSCNET Ⅲ controller.	Check if the connection was changed to like these.	The connection was changed.	Initialize the servo amplifier with the built-in application software "MR-J4(W)-B mode selection" of MR Configurator2, and then connect the amplifier to the controller.	[B] [WB]
		(2)	The [Pr. PA01] setting value was changed.	Check if [Pr. PA01] was changed.	It was changed.	Set [Pr. PA01] correctly.	
3E.6	Operation mode switch error	(1)	A method of positioning data memorized in the servo amplifier (point table method/program method) is different from the actual positioning mode (point table method/program method).	Check if the positioning mode (point table method/program method) was changed. Positioning mode: [Pr. PA01] "_ _ _ x"	It was changed. (with a purpose)	After changing the positioning mode, initialize the point table method/ program method. (Refer to section 7.2.8 [Pr. PT34] of "MR-J4-_A_-RJ Servo Amplifier Instruction Manual (Positioning Mode)")	[A]
					It was changed by mistake.	Set the positioning mode back to the correct setting.	
3E.8	MR-D30 combination error	(1)	With CC-Link IE Field Network Basic communication selected, MR-D30 functional safety unit was connected.	Check if MR-D30 is connected.	It is connected.	Disconnect MR-D30.	[GF]

Alarm No.: 42		Name: Servo control error (for linear servo motor and direct drive motor)					
Alarm content		· A servo control error occurred.					
Detail No.	Detail name	Cause		Check method	Check result	Action	Target
42.1	Servo control error by position deviation	(1)	The linear encoder resolution setting differs from the setting value.	Check the setting of [Pr. PL02] and [Pr. PL03].	The setting is incorrect.	Set it correctly.	[A] [B] [WB] [GF]
					The setting is correct.	Check (2).	
		(2)	The direction of mounting linear encoder is incorrect.	Check polarities of the linear encoder and the linear servo motor.	The mounting direction is incorrect.	Mount it correctly. Review the "encoder pulse count polarity selection" setting of the parameter as required. [A]: [Pr. PC45] [B] [WB] [GF]: [Pr. PC27]	
					The mounting direction is correct.	Check (3).	
		(3)	The connection of the servo motor is incorrect.	Check the wiring.	The wiring is incorrect.	Connect it correctly.	
					The wiring is correct.	Check (4).	
		(4)	The initial magnetic pole detection was not executed.	Execute the magnetic pole detection, and then check the repeatability.	It is not repeatable.	Execute the magnetic pole detection.	
					It is repeatable.	Check (5).	
		(5)	The position deviation exceeded the detection level.	Check the value of droop pulses.	The deviation is large.	Review the operation status. Review the [Pr. PL05] setting depending on circumstances.	

Alarm No.: 42		Name: Servo control error (for linear servo motor and direct drive motor)					
Alarm content		· A servo control error occurred.					
Detail No.	Detail name	Cause		Check method	Check result	Action	Target
42.2	Servo control error by speed deviation	(1)	The linear encoder resolution setting differs from the setting value.	Check the setting of [Pr. PL02] and [Pr. PL03].	The setting is incorrect.	Set it correctly.	[A] [B] [WB] [GF]
					The setting is correct.	Check (2).	
		(2)	The direction of mounting linear encoder is incorrect.	Check polarities of the linear encoder and the linear servo motor.	The mounting direction is incorrect.	Mount it correctly. Review the "encoder pulse count polarity selection" setting of the parameter as required. [A]: [Pr. PC45] [B] [WB] [GF]: [Pr. PC27]	
					The mounting direction is correct.	Check (3).	
		(3)	The connection of the servo motor is incorrect.	Check the wiring.	The wiring is incorrect.	Connect it correctly.	
					The wiring is correct.	Check (4).	
		(4)	The initial magnetic pole detection was not executed.	Execute the magnetic pole detection, and then check the repeatability.	It is not repeatable.	Execute the magnetic pole detection.	
					It is repeatable.	Check (5).	
		(5)	The speed deviation exceeded the detection level.	Calculate the deviation between the speed command and actual speed.	The deviation is large.	Review the operation status. Review the [Pr. PL06] setting depending on circumstances.	
42.3	Servo control error by torque/ thrust deviation	(1)	The linear encoder resolution setting differs from the setting value.	Check the setting of [Pr. PL02] and [Pr. PL03].	The setting is incorrect.	Set it correctly.	
					The setting is correct.	Check (2).	
		(2)	The direction of mounting linear encoder is incorrect.	Check polarities of the linear encoder and the linear servo motor.	The mounting direction is incorrect.	Mount it correctly. Review the "encoder pulse count polarity selection" setting of the parameter as required. [A]: [Pr. PC45] [B] [WB] [GF]: [Pr. PC27]	
					The mounting direction is correct.	Check (3).	
		(3)	The connection of the servo motor is incorrect.	Check the wiring.	The wiring is incorrect.	Connect it correctly.	
					The wiring is correct.	Check (4).	
		(4)	The initial magnetic pole detection was not executed.	Execute the magnetic pole detection, and then check the repeatability.	It is not repeatable.	Execute the magnetic pole detection.	
					It is repeatable.	Check (5).	
		(5)	The torque/thrust deviation exceeded the detection level.	Calculate the deviation between the current command and torque/ thrust.	The deviation is large.	Review the operation status. Review the [Pr. PL07] setting depending on circumstances.	

Alarm No.: 42		Name: Fully closed loop control error detection (during fully closed loop control)					
Alarm content		· A fully closed loop control error has occurred.					
Detail No.	Detail name	Cause		Check method	Check result	Action	Target
42.8	Fully closed loop control error by position deviation	(1)	The resolution of the load-side encoder setting differs from the setting value.	Check the setting of [Pr. PE04] and [Pr. PE05].	The setting is incorrect.	Set it correctly.	[A] [B] [WB] [GF]
					The setting is correct.	Check (2).	
		(2)	The direction of mounting load-side encoder is incorrect.	Check the mounting direction of the load-side encoder.	The mounting direction is incorrect.	Mount it correctly. Review the "encoder pulse count polarity selection" setting of the parameter as required. [A]: [Pr. PC45] [B] [WB] [GF]: [Pr. PC27]	
					The mounting direction is correct.	Check (3).	
		(3)	The position deviation exceeded the detection level.	Check the value of droop pulses.	The deviation is large.	Review the operation status. Review the [Pr. PE07] setting depending on circumstances.	
42.9	Fully closed loop control error by speed deviation	(1)	The resolution of the load-side encoder setting differs from the setting value.	Check the setting of [Pr. PE04] and [Pr. PE05].	The setting is incorrect.	Set it correctly.	
					The setting is correct.	Check (2).	
		(2)	The direction of mounting load-side encoder is incorrect.	Check the mounting direction of the load-side encoder.	The mounting direction is incorrect.	Mount it correctly. Review the "encoder pulse count polarity selection" setting of the parameter as required. [A]: [Pr. PC45] [B] [WB] [GF]: [Pr. PC27]	
					The mounting direction is correct.	Check (3).	
		(3)	The speed deviation exceeded the detection level.	Calculate the deviation between the speed command and actual speed.	The deviation is large.	Review the operation status. Review the [Pr. PE06] setting depending on circumstances.	
42.A	Fully closed loop control error by position deviation during command stop	Check it with the check method for [AL. 42.8].					

Alarm No.: 45		Name: Main circuit device overheat					
Alarm content		· Inside of the servo amplifier overheated.					
Detail No.	Detail name	Cause		Check method	Check result	Action	Target
45.1	Main circuit device overheat error 1	(1)	Ambient temperature has exceeded 55 ℃.	Check the ambient temperature.	It is over 55 ℃.	Lower the ambient temperature.	[A] [B] [WB] [RJ010] [GF]
					It is less than 55 ℃.	Check (2).	
		(2)	The close mounting is out of specifications.	Check the specifications of close mounting.	It is out of specifications.	Use within the range of specifications.	
					It is within specifications.	Check (3).	
		(3)	Turning on and off were repeated under the overload status.	Check if the overload status occurred many times.	It occurred.	Check operation pattern.	
					It did not occur.	Check (4).	
		(4)	A cooling fan, heat sink, or openings is clogged with foreign matter.	Clean the cooling fan, heat sink, or openings, and then check the repeatability.	It is not repeatable.	Clean it periodically.	
					It is repeatable.	Check (5).	
		(5)	The servo amplifier is malfunctioning.	Replace the servo amplifier, and then check the repeatability.	It is not repeatable.	Replace the servo amplifier.	
45.2	Main circuit device overheat error 2	(1)	Check it with the check method for [AL. 45.1].				

Alarm No.: 46		Name: Servo motor overheat					
Alarm content		· The servo motor overheated.					
Detail No.	Detail name	Cause		Check method	Check result	Action	Target
46.1	Abnormal temperature of servo motor 1	(1)	Ambient temperature of the servo motor has exceeded 40 ℃.	Check the ambient temperature of the servo motor.	It is over 40 ℃.	Lower the ambient temperature.	[A] [B] [WB] [RJ010] [GF]
					It is less than 40 ℃.	Check (2).	
		(2)	Servo motor is overloaded.	Check the effective load ratio.	The effective load ratio is high.	Reduce the load or review the operation pattern.	
					The effective load ratio is small.	Check (3).	
		(3)	The thermal sensor in the encoder is malfunctioning.	Check the servo motor temperature when the alarm occurs.	The servo motor temperature is low.	Replace the servo motor.	

Alarm No.: 46	Name: Servo motor overheat						
Alarm content	The servo motor overheated.						
Detail No.	Detail name	Cause		Check method	Check result	Action	Target
46.2	Abnormal temperature of servo motor 2	(1)	Ambient temperature of the linear servo motor or direct drive motor has exceeded 40 ℃.	Check the ambient temperature of the linear servo motor or direct drive motor.	It is over 40 ℃.	Lower the ambient temperature.	[A] [B] [WB] [GF]
					It is less than 40 ℃.	Check (2).	
		(2)	The linear servo motor or direct drive motor has been under overload status.	Check the effective load ratio.	The effective load ratio is high.	Reduce the load or review the operation pattern.	
					The effective load ratio is small.	Replace the servo motor.	
46.3	Thermistor disconnected error	(1)	In the parallel drive system, the parameter settings and the axis number settings are incorrect.	Check the settings of [Pr. PF37 Parallel drive - Encoder ID setting 1]. Check if the setting of [Pr. PF40 Parallel drive - Servo motor side system setting] matches the setting of the axis number set with the combination of SW2-3, SW2-4, and SW1.	It is not set correctly.	Set the parameter and the axis number correctly.	
					It is set correctly.	Check (2).	
		(2)	In the parallel drive system, the encoder cable from the servo motor is not connected to the encoder master servo amplifier.	Check if the encoder cable from the servo motor is connected to the encoder master servo amplifier.	It is not connected.	Connect the encoder cable of the servo motor to the encoder master servo amplifier. Connect the encoder master servo amplifier and the encoder slave servo amplifier in the order of the axis number.	
					It is connected.	Check (3).	
		(3)	A thermistor wire is not connected.	Check the thermistor wire.	It is not connected.	Connect it correctly.	
					It is connected.	Check (4).	
		(4)	The encoder cable MR-ENECBL_M-H for HF-JP series servo motors is used for the HG-JR22K1M(4) servo motor.	Check the model of the encoder cable.	MR-ENECBL_M-H is used.	Change it to MR-ENECBL_M-H-MTH.	
					MR-ENECBL_M-H-MTH is used.	Check (5).	
		(5)	The thermistor wire is disconnected.	Check the thermistor wire.	It is disconnected.	Repair the lead wire.	
					It is not disconnected.	Replace the servo motor.	
46.4	Thermistor circuit error	(1)	A thermistor circuit of the servo amplifier is malfunctioning.	Replace the servo amplifier, and then check the repeatability.	It is not repeatable.	Replace the servo amplifier.	[A] [B] [WB] [GF]
46.5	Abnormal temperature of servo motor 3	Check it with the check method for [AL. 46.1].					
46.6	Abnormal temperature of servo motor 4	(1)	A current was applied to the servo amplifier in excess of its continuous output current.	Check the effective load ratio.	The effective load ratio is high.	Reduce the load or review the operation pattern. Or use a larger capacity motor.	[A] [B] [WB] [RJ010] [GF]

Alarm No.: 47		Name: Cooling fan error					
Alarm content		· The speed of the servo amplifier cooling fan decreased. · Or the fan speed decreased to the alarm occurrence level or less.					
Detail No.	Detail name	Cause		Check method	Check result	Action	Target
47.1	Cooling fan stop error	(1)	Foreign matter was caught in the cooling fan.	Check if a foreign matter is caught in the cooling fan.	Something has been caught.	Remove the foreign matter.	[A] [B] [WB] [RJ010] [GF]
					Nothing has been caught.	Check (2).	
		(2)	Cooling fan life expired.	Check if the cooling fan is stopping.	It is stopping.	Replace the servo amplifier.	
47.2	Cooling fan speed reduction error	(1)	Foreign matter was caught in the cooling fan.	Check if a foreign matter is caught in the cooling fan.	Something has been caught.	Remove the foreign matter.	
					Nothing has been caught.	Check (2).	
		(2)	Cooling fan life expired.	Check the cooling fan speed.	The fan speed is less than the alarm occurrence level.	Replace the servo amplifier.	

Alarm No.: 50		Name: Overload 1					
Alarm content		Load exceeded overload protection characteristic of servo amplifier.					
Detail No.	Detail name	Cause		Check method	Check result	Action	Target
50.1	Thermal overload error 1 during operation	(1)	The servo motor power cable was disconnected.	Check the servo motor power cable.	It is disconnected.	Repair or replace the servo motor power cable.	[A] [B] [WB] [RJ010] [GF]
					It is not disconnected.	Check (2).	
		(2)	The connection of the servo motor is incorrect.	Check the wiring of U/V/W.	It is incorrect.	Connect it correctly.	
					It is correct.	Check (3).	
		(3)	The electromagnetic brake has not released. (The electromagnetic brake has been activated.)	Check if the electromagnetic brake is released during operation.	It is not released.	Release the electromagnetic brake.	
					It is released.	Check (4).	
		(4)	The direction of mounting linear encoder is incorrect.	Check polarities of the linear encoder and the linear servo motor.	The mounting direction is incorrect.	Mount it correctly. Review the "encoder pulse count polarity selection" setting of the parameter as required. [A]: [Pr. PC45] [B] [WB] [GF]: [Pr. PC27]	[A] [B] [WB] [GF]
					The mounting direction is correct.	Check (5).	
		(5)	A current was applied to the servo amplifier in excess of its continuous output current.	Check the effective load ratio.	The effective load ratio is high.	Reduce the load. Or use a larger capacity motor.	[A] [B] [WB] [RJ010] [GF]
					The effective load ratio is small.	Check (6).	
		(6)	The connection destination of the encoder cable is incorrect.	Check the connection destinations of CN2A, CN2B, and CN2C.	It is not correct.	Connect it correctly.	[WB]
					It is correct.	Check (7).	
		(7)	The servo system is unstable and resonating.	Check if it is resonating.	It is resonating.	Adjust gains. For MR-J4-03A6(-RJ) and MR-J4W2-0303B6, check if the main circuit power supply voltage is 48 V DC even though the setting is 24 V DC.	[A] [B] [WB] [RJ010] [GF]
					It is not resonating.	Check (8).	
		(8)	The servo amplifier is malfunctioning.	Replace the servo amplifier, and then check the repeatability.	It is not repeatable.	Replace the servo amplifier.	
					It is repeatable.	Check (9).	
		(9)	The encoder or linear encoder is malfunctioning.	Replace the servo motor or linear encoder, and then check the repeatability.	It is not repeatable.	Replace the servo motor or linear encoder.	
50.2	Thermal overload error 2 during operation	Check it with the check method for [AL. 50.1].					
50.3	Thermal overload error 4 during operation						

Alarm No.: 50		Name: Overload 1					
Alarm content		· Load exceeded overload protection characteristic of servo amplifier.					
Detail No.	Detail name	Cause		Check method	Check result	Action	Target
50.4	Thermal overload error 1 during a stop	(1)	A moving part collided against the machine.	Check if it collided.	It collided.	Check operation pattern.	[A] [B] [WB] [RJ010] [GF]
					It did not collide.	Check (2).	
		(2)	The servo motor power cable was disconnected.	Check the servo motor power cable.	It is disconnected.	Repair or replace the servo motor power cable.	
					It is not disconnected.	Check (3).	
		(3)	Hunting occurs during servo-lock.	Check if the hunting is occurring.	The hunting is occurring.	Adjust gains.	
					The hunting is not occurring.	Check (4).	
		(4)	The electromagnetic brake has not released. (The electromagnetic brake has been activated.)	Check if the electromagnetic brake is released.	It is not released.	Release the electromagnetic brake.	
					It is released.	Check (5).	
		(5)	The direction of mounting linear encoder is incorrect.	Check polarities of the linear encoder and the linear servo motor.	The mounting direction is incorrect.	Mount it correctly. Review the "encoder pulse count polarity selection" setting of the parameter as required. [A]: [Pr. PC45] [B] [WB] [GF]: [Pr. PC27]	[A] [B] [WB] [GF]
					The mounting direction is correct.	Check (6).	
		(6)	A current was applied to the servo amplifier in excess of its continuous output current.	Check the effective load ratio.	The effective load ratio is high.	Reduce the load. Or use a larger capacity motor.	[A] [B] [WB] [RJ010] [GF]
					The effective load ratio is small.	Check (7).	
		(7)	The connection destination of the encoder cable is incorrect.	Check the connection destinations of CN2A, CN2B, and CN2C.	It is not correct.	Connect it correctly.	[WB]
					It is correct.	Check (8).	
		(8)	The servo system is unstable and resonating.	Check if it is resonating.	It is resonating.	Adjust gains.	[A] [B] [WB] [RJ010] [GF]
					It is not resonating.	Check (9).	
		(9)	The servo amplifier is malfunctioning.	Replace the servo amplifier, and then check the repeatability.	It is not repeatable.	Replace the servo amplifier.	
					It is repeatable.	Check (10).	
		(10)	The encoder, servo motor, or linear encoder is malfunctioning.	Replace the servo motor or linear encoder, and then check the repeatability.	It is not repeatable.	Replace the servo motor or linear encoder.	
50.5	Thermal overload error 2 during a stop	Check it with the check method for [AL. 50.4].					
50.6	Thermal overload error 4 during a stop						

Alarm No.: 51		Name: Overload 2					
Alarm content		· Maximum output current flowed continuously due to machine collision or the like.					
Detail No.	Detail name	Cause		Check method	Check result	Action	Target
51.1	Thermal overload error 3 during operation	(1)	The servo motor power cable was disconnected.	Check the servo motor power cable.	It is disconnected.	Repair or replace the servo motor power cable.	[A] [B] [WB] [RJ010] [GF]
					It is not disconnected.	Check (2).	
		(2)	The connection of the servo motor is incorrect.	Check the wiring of U/V/W.	It is incorrect.	Connect it correctly.	
					It is correct.	Check (3).	
		(3)	The connection of the encoder cable is incorrect.	Check if the encoder cable is connected correctly.	It is incorrect.	Connect it correctly.	
					It is correct.	Check (4).	
		(4)	The direction of mounting linear encoder is incorrect.	Check polarities of the linear encoder and the linear servo motor.	The mounting direction is incorrect.	Mount it correctly. Review the "encoder pulse count polarity selection" setting of the parameter as required. [A]: [Pr. PC45] [B] [WB] [GF]: [Pr. PC27]	[A] [B] [WB] [GF]
					The mounting direction is correct.	Check (5).	
		(5)	The torque is insufficient.	Check the peak load ratio.	The torque is saturated.	Reduce the load or review the operation pattern. Or use a larger capacity motor.	[A] [B] [WB] [RJ010] [GF]
					The torque is not saturated.	Check (6).	
		(6)	The servo amplifier is malfunctioning.	Replace the servo amplifier, and then check the repeatability.	It is not repeatable.	Replace the servo amplifier.	
					It is repeatable.	Check (7).	
		(7)	An encoder or servo motor is malfunctioning.	Replace the servo motor, and then check the repeatability.	It is not repeatable.	Replace the servo motor.	
51.2	Thermal overload error 3 during a stop	(1)	A moving part collided against the machine.	Check if it collided.	It collided.	Check operation pattern.	
					It did not collide.	Refer to (2).	
		(2)	The servo motor power cable was disconnected.	Check it with the check method for [AL. 51.1].			
		(3)	The connection of the servo motor is incorrect.				
		(4)	The connection of the encoder cable is incorrect.				
		(5)	The direction of mounting linear encoder is incorrect.				
		(6)	The torque is saturated.				
		(7)	The servo amplifier is malfunctioning.				
		(8)	An encoder is malfunctioning.				

Alarm No.: 52		Name: Error excessive					
Alarm content		· Droop pulses have exceeded the alarm occurrence level.					
Detail No.	Detail name	Cause		Check method	Check result	Action	Target
52.1	Excess droop pulse 1	(1)	The servo motor power cable was disconnected.	Check the servo motor power cable.	It is disconnected.	Repair or replace the servo motor power cable.	[A] [B] [WB] [RJ010] [GF]
					It is not disconnected.	Check (2).	
		(2)	The connection of the servo motor is incorrect.	Check the wiring of U/V/W.	It is incorrect.	Connect it correctly.	
					It is correct.	Check (3).	
		(3)	The connection of the encoder cable is incorrect.	Check if the encoder cable is connected correctly.	It is incorrect.	Connect it correctly.	
					It is correct.	Check (4).	
		(4)	The torque limit has been enabled.	Check if the limiting torque is in progress.	The limiting torque is in progress.	Increase the torque limit value.	
					The limiting torque is not in progress.	Check (5).	
		(5)	A moving part collided against the machine.	Check if it collided.	It collided.	Check operation pattern.	
					It did not collide.	Check (6).	
		(6)	The electromagnetic brake has not released. (The electromagnetic brake has been activated.)	Check if electromagnetic brake is released.	It is not released.	Release the electromagnetic brake.	
					It is released.	Check (7).	
		(7)	The torque is insufficient.	Check the peak load ratio.	The torque is saturated.	Reduce the load or review the operation pattern. Or use a larger capacity motor.	
					The torque is not saturated.	Check (8).	
		(8)	Power supply voltage dropped.	Check the bus voltage value.	The bus voltage is low.	Check the power supply voltage and power supply capacity.	
					The bus voltage is high.	Check (9).	
		(9)	Acceleration/ deceleration time constant is too short.	Set a longer deceleration time constant, and then check the repeatability.	It is not repeatable.	Increase the acceleration/deceleration time constant.	
					It is repeatable.	Check (10).	
		(10)	The position loop gain is small.	Increase the position loop gain, and then check the repeatability.	It is not repeatable.	Increase the position loop gain ([Pr. PB08]).	
					It is repeatable.	Check (11).	
		(11)	The error excessive alarm level was not set correctly.	Check the setting of the error excessive alarm level. [A]: [Pr. PC24], [Pr. PC43] [B] [WB] [RJ010] [GF]: [Pr. PC01], [Pr. PC06]	It is not set correctly.	Set it correctly.	
					It is set correctly.	Check (12).	
		(12)	Servo motor shaft was rotated by external force./ The moving part of the linear servo motor was moved by external force.	Measure the actual position under the servo-lock status.	It is rotated by external force./ It was moved by external force.	Review the machine.	
					It is not rotated by external force./ It was not moved by external force.	Check (13).	
		(13)	The encoder or the servo motor is malfunctioning.	Replace the servo motor, and then check the repeatability.	It is not repeatable.	Replace the servo motor.	
					It is repeatable.	Check (14).	
		(14)	The servo amplifier is malfunctioning.	Replace the servo amplifier, and then check the repeatability.	It is not repeatable.	Replace the servo amplifier.	
52.3	Excess droop pulse 2	Check it with the check method for [AL. 52.1].					

Alarm No.: 52	Name: Error excessive						
Alarm content	· Droop pulses have exceeded the alarm occurrence level.						
Detail No.	Detail name	Cause		Check method	Check result	Action	Target
52.4	Error excessive during 0 torque limit	(1)	The torque limit has been 0.	Check the torque limit value.	The torque limit has been 0.	Do not input a command while the torque limit value is 0.	[A] [B] [WB] [RJ010] [GF]
52.5	Excess droop pulse 3	Check it with the check method for [AL. 52.1].					

Alarm No.: 54	Name: Oscillation detection						
Alarm content	· An oscillation of the servo motor was detected.						
Detail No.	Detail name	Cause		Check method	Check result	Action	Target
54.1	Oscillation detection error	(1)	The servo system is unstable and oscillating.	Check if the servo motor is oscillating. Check the torque ripple with MR Configurator2.	The torque ripple is vibrating.	Adjust the servo gain with the auto tuning. Set the machine resonance suppression filter.	[A] [B] [WB] [RJ010] [GF]
					The torque ripple is not vibrating.	Check (2).	
		(2)	The resonance frequency has changed due to deterioration.	Measure the resonance frequency of the equipment and compare it with the setting value of the machine resonance suppression filter.	The resonance frequency of the equipment is different from the filter setting value.	Change the setting value of the machine resonance suppression filter.	
					The resonance frequency of the equipment is the same as the filter setting value.	Check (3).	
		(3)	The encoder or linear encoder is malfunctioning.	Replace the servo motor or linear encoder, and then check the repeatability.	It is not repeatable.	Replace the servo motor or linear encoder.	

Alarm No.: 56		Name: Forced stop error					
Alarm content		· The servo motor does not decelerate normally during forced stop deceleration.					
Detail No.	Detail name	Cause		Check method	Check result	Action	Target
56.2	Over speed during forced stop	(1)	The forced stop deceleration time constant is short. [A]: [Pr. PC51] [B] [WB] [RJ010] [GF]: [Pr. PC24]	Increase the parameter setting value, and then check the repeatability.	It is not repeatable.	Adjust the deceleration time constant.	[A] [B] [WB] [RJ010] [GF]
					It is repeatable.	Check (2).	
		(2)	The torque limit has been enabled.	Check if the limiting torque is in progress.	The limiting torque is in progress.	Review the torque limit value.	
					The limiting torque is not in progress.	Check (3).	
		(3)	The servo system is unstable and oscillating.	Check if the servo motor is oscillating. Check the torque ripple with MR Configurator2.	The torque ripple is vibrating.	Adjust the servo gain. Set the machine resonance suppression filter.	
					The torque ripple is not vibrating.	Check (4).	
		(4)	The encoder or linear encoder is malfunctioning.	Replace the servo motor or linear encoder, and then check the repeatability.	It is not repeatable.	Replace the servo motor or linear encoder.	
56.3	Estimated distance over during forced stop	(1)	The forced stop deceleration time constant is short. [A]: [Pr. PC51] [B] [WB] [RJ010] [GF]: [Pr. PC24]	Increase the parameter setting value, and then check the repeatability.	It is not repeatable.	Adjust the deceleration time constant.	
					It is repeatable.	Check (2).	
		(2)	The torque limit has been enabled.	Check if the limiting torque is in progress.	The limiting torque is in progress.	Review the torque limit value.	
					The limiting torque is not in progress.	Check (3).	
		(3)	The encoder or linear encoder is malfunctioning.	Replace the servo motor or linear encoder, and then check the repeatability.	It is not repeatable.	Replace the servo motor or linear encoder.	
56.4	Forced stop start error	(1)	The SSCNET III cable is disconnected.	Check if the SSCNET III cable is connected correctly.	It is not connected.	Connect it correctly.	[B]
					It is connected.	Check (2).	
		(2)	The SSCNET III cable is malfunctioning.	Check if the SSCNET III cable is disconnected or shorted.	It has a failure.	Replace or repair the cable.	
					It has no failure.	Check (3).	
		(3)	Something near the device caused it.	Check the noise, ambient temperature, vibration, etc.	There is a problem in the surrounding.	Take countermeasures against its cause.	
					There is no problem in the surrounding.	Check (4).	
		(4)	The servo amplifier is malfunctioning.	Replace the servo amplifier, and then check the repeatability.	It is not repeatable.	Replace the servo amplifier.	
					It is repeatable.	Check (5).	
		(5)	The controller is malfunctioning.	Replace the controller, and then check the repeatability.	It is not repeatable.	Replace the controller.	

Alarm No.: 61	Name: Operation error						
Alarm content	· An operation of the positioning function failed.						
Detail No.	Detail name	Cause		Check method	Check result	Action	Target
61.1	Point table setting range error	(1)	"1" or "3" was set to the sub function of the last point table (255).	Check if "1" or "3" was set.	It was set.	Review the settings.	[A] [GF]

Alarm No.: 63	Name: STO timing error						
Alarm content	· STO input signal turns off while the servo motor is rotating.						
Detail No.	Detail name	Cause		Check method	Check result	Action	Target
63.1	STO1 off	(1)	STO1 was turned off (enabled) under the following speed conditions. 1) Servo motor speed: 50 r/min or more 2) Linear servo motor speed: 50 mm/s or more 3) Direct drive motor speed: 5 r/min or more	Check if STO1 is off (enabled).	It is off (enabled).	Turn on STO1 (disabled).	[A] [B] [WB] [RJ010] [GF]
63.2	STO2 off	(1)	STO2 was turned off (enabled) under the following speed conditions. 1) Servo motor speed: 50 r/min or more 2) Linear servo motor speed: 50 mm/s or more 3) Direct drive motor speed: 5 r/min or more	Check if STO2 is off (enabled).	It is off (enabled).	Turn on STO2 (disabled).	
63.5	STO by functional safety unit	(1)	STO of the functional safety unit was turned off (enabled) under the following speed conditions. 1) Servo motor speed: 50 r/min or more 2) Linear servo motor speed: 50 mm/s or more 3) Direct drive motor speed: 5 r/min or more	Check if STO of the functional safety unit is off (enabled).	It is off (enabled).	Turn on STO (disabled).	[A] [B] [GF]

Alarm No.: 64	Name: Functional safety unit setting error						
Alarm content	· A setting of the servo amplifier or functional safety unit was incorrect.						
Detail No.	Detail name	Cause		Check method	Check result	Action	Target
64.1	STO input error	(1)	When a functional safety unit is used, a connector is connected to CN8 of the servo amplifier.	Check the connection of the CN8 connector.	It is connected.	Turn off the control circuit power supply of the servo amplifier, and then remove the connector of CN8.	[A] [B] [GF]
64.2	Compatibility mode setting error	(1)	When a functional safety unit is used, the J3 compatibility mode is set.	Check the parameter setting.	The J3 compatibility mode is set.	The J3 compatibility mode is not supported with the functional safety unit. Set it correctly.	[B]

Alarm No.: 64		Name: Functional safety unit setting error					
Alarm content		· A setting of the servo amplifier or functional safety unit was incorrect.					
Detail No.	Detail name	Cause		Check method	Check result	Action	Target
64.3	Operation mode setting error	(1)	The speed observation function turned to be enabled in the fully closed loop control mode, linear servo motor control mode, or DD motor control mode.	Check if the parameter setting is correct.	The setting is incorrect.	Set it correctly.	[A] [B] [GF]

Alarm No.: 65		Name: Functional safety unit connection error					
Alarm content		· Communication or signal between a functional safety unit and servo amplifier failed.					
Detail No.	Detail name	Cause		Check method	Check result	Action	Target
65.1	Functional safety unit communication error 1	(1)	The functional safety unit came off.	Check the installation of the functional safety unit.	It is disconnected.	Turn off the control circuit power supply of the servo amplifier, and then connect the functional safety unit.	[A] [B] [GF]
					It is connected.	Check (2).	
		(2)	The functional safety unit is malfunctioning.	Replace the functional safety unit, and then check the repeatability.	It is not repeatable.	Replace the functional safety unit.	
					It is repeatable.	Check (3).	
		(3)	The servo amplifier is malfunctioning.	Replace the servo amplifier, and then check the repeatability.	It is not repeatable.	Replace the servo amplifier.	
					It is repeatable.	Check (4).	
		(4)	Something near the device caused it.	Check the noise, ambient temperature, etc.	There is a problem in the surrounding.	Take countermeasures against its cause.	
65.2	Functional safety unit communication error 2	Check it with the check method for [AL. 65.1].					
65.3	Functional safety unit communication error 3						
65.4	Functional safety unit communication error 4						
65.5	Functional safety unit communication error 5						
65.6	Functional safety unit communication error 6						
65.7	Functional safety unit communication error 7						
65.8	Functional safety unit shut-off signal error 1						
65.9	Functional safety unit shut-off signal error 2						

Alarm No.: 66	Name: Encoder initial communication error (safety observation function)						
Alarm content	· The connected encoder is not compatible with the servo amplifier. · An error has occurred in the communication between an encoder and servo amplifier.						
Detail No.	Detail name	Cause		Check method	Check result	Action	Target
66.1	Encoder initial communication - Receive data error 1 (safety observation function)	(1)	An encoder cable is malfunctioning.	Check if the encoder cable is disconnected or shorted.	It has a failure.	Replace or repair the cable.	[A] [B] [GF]
					It has no failure.	Check (2).	
		(2)	The servo amplifier is malfunctioning.	Replace the servo amplifier, and then check the repeatability.	It is not repeatable.	Replace the servo amplifier.	
					It is repeatable.	Check (3).	
		(3)	An encoder is malfunctioning.	Replace the servo motor, and then check the repeatability.	It is not repeatable.	Replace the servo motor.	
					It is repeatable.	Check (4).	
		(4)	Something near the device caused it.	Check the noise, ambient temperature, vibration, etc.	There is a problem in the surrounding.	Take countermeasures against its cause.	
66.2	Encoder initial communication - Receive data error 2 (safety observation function)	Check it with the check method for [AL. 66.1].					
66.3	Encoder initial communication - Receive data error 3 (safety observation function)						
66.7	Encoder initial communication - Transmission data error 1 (safety observation function)						
66.9	Encoder initial communication - Process error 1 (safety observation function)	(1)	A servo motor with functional safety is not connected.	Check if a servo motor with functional safety is connected.	It is not a servo motor with functional safety.	Connect a servo motor with functional safety.	[A] [B] [GF]
					It is a servo motor with functional safety.	Check (2).	
		(2)	The functional safety unit is malfunctioning.	Replace the functional safety unit, and then check the repeatability.	It is not repeatable.	Replace the functional safety unit.	
					It is repeatable.	Check (3).	
		(3)	The servo amplifier is malfunctioning.	Replace the servo amplifier, and then check the repeatability.	It is not repeatable.	Replace the servo amplifier.	
					It is repeatable.	Check (4).	
		(4)	An encoder is malfunctioning.	Replace the servo motor, and then check the repeatability.	It is not repeatable.	Replace the servo motor.	
					It is repeatable.	Check (5).	
		(5)	Something near the device caused it.	Check the noise, ambient temperature, etc.	There is a problem in the surrounding.	Take countermeasures against its cause.	

Alarm No.: 67		Name: Encoder normal communication error 1 (safety observation function)					
Alarm content		· An error has occurred in the communication between an encoder and servo amplifier.					
Detail No.	Detail name	Cause		Check method	Check result	Action	Target
67.1	Encoder normal communication - Receive data error 1 (safety observation function)	(1)	An encoder cable is malfunctioning.	Check if the encoder cable is disconnected or shorted.	It has a failure.	Repair or replace the cable.	[A] [B] [GF]
					It has no failure.	Check (2).	
		(2)	The servo amplifier is malfunctioning.	Replace the servo amplifier, and then check the repeatability.	It is not repeatable.	Replace the servo amplifier.	
					It is repeatable.	Check (3).	
		(3)	An encoder is malfunctioning.	Replace the servo motor, and then check the repeatability.	It is not repeatable.	Replace the servo motor.	
					It is repeatable.	Check (4).	
		(4)	Something near the device caused it.	Check the noise, ambient temperature, vibration, etc.	There is a problem in the surrounding.	Take countermeasures against its cause.	
67.2	Encoder normal communication - Receive data error 2 (safety observation function)	Check it with the check method for [AL. 67.1].					
67.3	Encoder normal communication - Receive data error 3 (safety observation function)						
67.4	Encoder normal communication - Receive data error 4 (safety observation function)						
67.7	Encoder normal communication - Transmission data error 1 (safety observation function)						

Alarm No.: 68		Name: STO diagnosis error					
Alarm content		· An error of STO input signal was detected.					
Detail No.	Detail name	Cause		Check method	Check result	Action	Target
68.1	Mismatched STO signal error	(1)	STO1 and STO2 are not inputted correctly.	Check if the STO1 and STO2 of CN8 connector are wired correctly.	It is not wired correctly.	Wire it correctly.	[A] [B] [WB] [GF]
					It is wired correctly.	Check (2).	
		(2)	The input states of STO1 and STO2 are different.	Check the on/off states of STO1 and STO2.	The on/off states of STO1 and STO2 are different.	Set STO1 and STO2 to the same input states.	
					The on/off states of STO1 and STO2 are the same.	Check (3).	
		(3)	The setting of [Pr. PF18 STO diagnosis error detection time] ([Pr. PX43] for when the J3 extension function is used) is incorrect.	Set a longer time in the parameter, and then check the repeatability.	It is not repeatable.	Review the parameter setting.	
					It is repeatable.	Check (4).	
		(4)	The STO circuit is malfunctioning.	Replace the servo amplifier, and then check the repeatability.	It is not repeatable.	Replace the servo amplifier.	
					It is repeatable.	Check (5).	
		(5)	Something near the device caused it.	Check the noise, ambient temperature, etc.	There is a problem in the surrounding.	Take countermeasures against its cause.	

Alarm No.: 69		Name: Command error					
Alarm content		· The command position exceeded 32 bits (-2147483648 to 2147483647) when the software limit is activated. · The command position exceeded 30 bits (-536870912 to 536870911) from the value that was set when the software limit was activated. · After the detection of LSP (Forward rotation stroke end) or LSN (Reverse rotation stroke end), the command position exceeded 30 bits (-536870912 to 536870911) from the detected position. · After the detection of FLS (Upper stroke limit) or RLS (Lower stroke limit), the command position exceeded 30 bits (-536870912 to 536870911) from the detected position.					
Detail No.	Detail name	Cause		Check method	Check result	Action	Target
69.1	Forward rotation-side software limit detection - Command excess error	(1)	The command position exceeded 32 bits when the software limit is activated.	Check if the command position is correct.	The command position was set to 32 bits or more.	Set the command position correctly.	[GF]
					The command position was set correctly.	Check (2).	
		(2)	The command position exceeded 30 bits from the value that was set when the software limit was activated.	Check if the parameter settings of the software limit ([Pr. PT15] to [Pr. PT18]) to the command position are correct.	It was set within the command position.	Set [Pr. PT15] to [Pr. PT18] correctly.	
					It was set correctly.	Check (3).	
		(3)	The controller is malfunctioning.	Replace the controller, and then check the repeatability.	It is not repeatable.	Replace the controller.	
					It is repeatable.	Check (4).	
		(4)	Something near the device caused it.	Check the noise, ambient temperature, etc.	There is a problem in the surrounding.	Take countermeasures against its cause.	
69.2	Reverse rotation-side software limit detection - Command excess error	Check it with the check method for [AL. 69.1].					

Alarm No.: 69		Name: Command error					
Alarm content		· The command position exceeded 32 bits (-2147483648 to 2147483647) when the software limit is activated. · The command position exceeded 30 bits (-536870912 to 536870911) from the value that was set when the software limit was activated. · After the detection of LSP (Forward rotation stroke end) or LSN (Reverse rotation stroke end), the command position exceeded 30 bits (-536870912 to 536870911) from the detected position. · After the detection of FLS (Upper stroke limit) or RLS (Lower stroke limit), the command position exceeded 30 bits (-536870912 to 536870911) from the detected position.					
Detail No.	Detail name	Cause		Check method	Check result	Action	Target
69.3	Forward rotation stroke end detection - Command excess error	(1)	The command position exceeded 30 bits from the detected position after the detection of LSP (Forward rotation stroke end).	Check the command position.	The command position was set to 30 bits or more.	Check operation pattern.	[GF]
					It was set correctly.	Check (2).	
		(2)	The forward rotation stroke limit switch is not connected to LSP (Forward rotation stroke end).	Check if the limit switch is connected correctly.	It is not connected.	Connect it correctly.	
					It is connected.	Check (3).	
		(3)	The controller is malfunctioning.	Replace the controller, and then check the repeatability.	It is not repeatable.	Replace the controller.	
					It is repeatable.	Check (4).	
		(4)	Something near the device caused it.	Check the noise, ambient temperature, etc.	There is a problem in the surrounding.	Take countermeasures against its cause.	
69.4	Reverse rotation stroke end detection - Command excess error	(1)	The command position exceeded 30 bits from the detected position after the detection of LSN (Reverse rotation stroke end).	Check the command position.	The command position was set to 30 bits or more.	Check operation pattern.	
					It was set correctly.	Check (2).	
		(2)	The reverse rotation stroke limit switch is not connected to LSN (Reverse rotation stroke end).	Check if the limit switch is connected correctly.	It is not connected.	Connect it correctly.	
					It is connected.	Check (3).	
		(3)	The controller is malfunctioning.	Replace the controller, and then check the repeatability.	It is not repeatable.	Replace the controller.	
					It is repeatable.	Check (4).	
		(4)	Something near the device caused it.	Check the noise, ambient temperature, etc.	There is a problem in the surrounding.	Take countermeasures against its cause.	
69.5	Upper stroke limit detection - Command excess error	(1)	The command position exceeded 30 bits from the detected position after the detection of FLS (Upper stroke limit).	Check the command position.	The command position was set to 30 bits or more.	Check operation pattern.	
					It was set correctly.	Check (2).	
		(2)	The upper stroke limit switch is not wired. Or the switch is incorrectly positioned.	Check if the limit switch is wired correctly. Or check if the switch is incorrectly positioned.	It has a failure.	Take countermeasures against its cause.	
					It has no failure.	Check (3).	
		(3)	Something near the device caused it.	Check the noise, ambient temperature, etc.	There is a problem in the surrounding.	Take countermeasures against its cause.	
					There is no problem in the surrounding.	Check (4).	
		(4)	The controller is malfunctioning.	Replace the controller, and then check the repeatability.	It is not repeatable.	Replace the controller.	

Alarm No.: 69		Name: Command error					
Alarm content		· The command position exceeded 32 bits (-2147483648 to 2147483647) when the software limit is activated. · The command position exceeded 30 bits (-536870912 to 536870911) from the value that was set when the software limit was activated. · After the detection of LSP (Forward rotation stroke end) or LSN (Reverse rotation stroke end), the command position exceeded 30 bits (-536870912 to 536870911) from the detected position. · After the detection of FLS (Upper stroke limit) or RLS (Lower stroke limit), the command position exceeded 30 bits (-536870912 to 536870911) from the detected position.					
Detail No.	Detail name	Cause		Check method	Check result	Action	Target
69.6	Lower stroke limit detection - Command excess error	(1)	The command position exceeded 30 bits from the detected position after the detection of RLS (Lower stroke limit).	Check the command position.	The command position was set to 30 bits or more.	Check operation pattern.	[GF]
					It was set correctly.	Check (2).	
		(2)	The lower stroke limit switch is not wired. Or the switch is incorrectly positioned.	Check if the limit switch is wired correctly. Or check if the switch is incorrectly positioned.	It has a failure.	Take countermeasures against its cause.	
					It has no failure.	Check (3).	
		(3)	Something near the device caused it.	Check the noise, ambient temperature, etc.	There is a problem in the surrounding.	Take countermeasures against its cause.	
					There is no problem in the surrounding.	Check (4).	
		(4)	The controller is malfunctioning.	Replace the controller, and then check the repeatability.	It is not repeatable.	Replace the controller.	

Alarm No.: 70		Name: Load-side encoder initial communication error 1					
Alarm content		· An error occurred in the initial communication between the load-side encoder and servo amplifier.					
Detail No.	Detail name	Cause		Check method	Check result	Action	Target
70.1	Load-side encoder initial communication - Receive data error 1	(1)	A load-side encoder cable is malfunctioning.	Check if the load-side encoder cable is disconnected or shorted.	It has a failure.	Replace or repair the cable.	[A] [B] [WB] [GF]
					It has no failure.	Check (2).	
		(2)	When you use an A/B/Z-phase differential output linear encoder, the servo amplifier is not compatible with the linear encoder.	Check if the servo amplifier (MR-J4-_-RJ) is compatible with the A/B/Z-phase differential output linear encoder.	The servo amplifier is not compatible with it.	Use a servo amplifier which is compatible with it.	[A] [B] [GF]
					The servo amplifier is compatible with it.	Check (3).	
		(3)	When you use an A/B/Z-phase differential output linear encoder, the connection with the linear encoder is incorrect.	Check if the wiring of the linear encoder is correct. (Check if it is wired to PSEL.)	The wiring is incorrect.	Wire it correctly.	
					The wiring is correct.	Check (4).	
		(4)	The servo amplifier is malfunctioning.	Replace the servo amplifier, and then check the repeatability.	It is not repeatable.	Replace the servo amplifier.	[A] [B] [WB] [GF]
					It is repeatable.	Check (5).	
		(5)	A load-side encoder is malfunctioning.	Replace the load-side encoder, and then check the repeatability.	It is not repeatable.	Replace the load-side encoder.	
					It is repeatable.	Check (6).	
		(6)	Something near the device caused it.	Check the noise, ambient temperature, vibration, etc.	There is a problem in the surrounding.	Take countermeasures against its cause.	
70.2	Load-side encoder initial communication - Receive data error 2	Check it with the check method for [AL. 70.1].					

Alarm No.: 70		Name: Load-side encoder initial communication error 1					
Alarm content		· An error occurred in the initial communication between the load-side encoder and servo amplifier.					
Detail No.	Detail name	Cause		Check method	Check result	Action	Target
70.3	Load-side encoder initial communication - Receive data error 3	(1)	An axis not used is not set as disabled-axis.	Check the setting of the disabling control axis switches (SW2-2/SW2-3/SW2-4).	It is not set as disabled-axis.	Set it as disabled-axis.	[WB]
					It is set as disabled-axis.	Check (2).	
		(2)	The load-side encoder cable was disconnected.	Check if the load-side encoder cable is connected correctly.	It is not connected.	Connect it correctly.	[A] [B] [WB] [GF]
					It is connected.	Check (3).	
		(3)	A load-side encoder cable is malfunctioning.	Check if the load-side encoder cable is disconnected or shorted.	It has a failure.	Replace or repair the cable.	
					It has no failure.	Check (4).	
		(4)	The power voltage has been unstable. (For the load-side encoder with the external power supply input)	Check the power capacity and voltage.	It has a failure.	Review the power and related parts.	
					It has no failure.	Check (5).	
		(5)	The parameter setting of communication method is incorrect. [A]: [Pr. PC44] [B] [GF]: [Pr. PC26]	Check the parameter setting.	The setting is incorrect.	Set it correctly.	[A] [B] [GF]
					The setting is correct.	Check (6).	
		(6)	When you use an A/B/Z-phase differential output linear encoder, the connection with the linear encoder is incorrect.	Check if the wiring of the linear encoder is correct. (Check if it is wired to PSEL.)	The wiring is incorrect.	Wire it correctly.	
					The wiring is correct.	Check (7).	
		(7)	When you use a four-wire type linear encoder, the servo amplifier is not compatible with the four-wire type linear encoder.	Check if the servo amplifier is compatible with the four-wire type linear encoder. (MR-J4-_-RJ)	It is not compatible.	Use a servo amplifier which is compatible with it.	
					It is compatible.	Check (8).	
		(8)	The servo amplifier is malfunctioning.	Replace the servo amplifier, and then check the repeatability.	It is not repeatable.	Replace the servo amplifier.	[A] [B] [WB] [GF]
					It is repeatable.	Check (9).	
		(9)	A load-side encoder is malfunctioning.	Replace the load-side encoder, and then check the repeatability.	It is not repeatable.	Replace the load-side encoder.	
					It is repeatable.	Check (10).	
		(10)	Something near the device caused it.	Check the noise, ambient temperature, vibration, etc.	There is a problem in the surrounding.	Take countermeasures against its cause.	
70.4	Load-side encoder initial communication - Encoder malfunction	(1)	A load-side encoder is malfunctioning.	Replace the load-side encoder, and then check the repeatability.	It is not repeatable.	Replace the load-side encoder.	[B] [WB]
					It is repeatable.	Check (2).	
		(2)	Something near the device caused it.	Check the noise, ambient temperature, vibration, etc.	There is a problem in the surrounding.	Take countermeasures against its cause.	

Alarm No.: 70		Name: Load-side encoder initial communication error 1					
Alarm content		· An error occurred in the initial communication between the load-side encoder and servo amplifier.					
Detail No.	Detail name	Cause		Check method	Check result	Action	Target
70.5	Load-side encoder initial communication - Transmission data error 1	(1)	When you use an A/B/Z-phase differential output linear encoder, the wiring of the linear encoder is incorrect.	Check if the A/B-phase pulse signals (PA, PAR, PB, and PBR) of the encoder cable are disconnected or shorted.	It is disconnected or shorted.	Repair the encoder cable.	[A] [B] [GF]
					It is not disconnected or shorted.	Check (2).	
		(2)	A load-side encoder cable is malfunctioning.	Check it with the check method for [AL. 70.1].			[A] [B] [WB] [GF]
		(3)	The servo amplifier is malfunctioning.				
		(4)	A load-side encoder is malfunctioning.				
		(5)	Something near the device caused it.				
70.6	Load-side encoder initial communication - Transmission data error 2	(1)	When you use an A/B/Z-phase differential output linear encoder, the wiring of the linear encoder is incorrect.	Check if the Z-phase pulse signals (PZ/PZR) of the encoder cable are disconnected or shorted.	It is disconnected or shorted.	Repair the encoder cable.	[A] [B] [GF]
					It is not disconnected or shorted.	Check (2).	
		(2)	A load-side encoder cable is malfunctioning.	Check it with the check method for [AL. 70.1].			[A] [B] [WB] [GF]
		(3)	The servo amplifier is malfunctioning.				
		(4)	A load-side encoder is malfunctioning.				
		(5)	Something near the device caused it.				
70.7	Load-side encoder initial communication - Transmission data error 3	Check it with the check method for [AL. 70.1].					
70.8	Load-side encoder initial communication - Incompatible encoder	(1)	A load-side encoder, which is not compatible with the servo amplifier, was connected.	Check the model of the load-side encoder.	It is not compatible with the servo amplifier.	Use a load-side encoder which is compatible with the servo amplifier.	[B] [WB]
					It is compatible with the servo amplifier.	Check (2).	
		(2)	The software version of the servo amplifier does not support the load-side encoder.	Check if the software version of the servo amplifier supports the load-side encoder.	It is not compatible.	Replace the servo amplifier to one which software version supports the load-side encoder.	
					It is compatible.	Check (3).	
		(3)	A load-side encoder is malfunctioning.	Replace the load-side encoder, and then check the repeatability.	It is not repeatable.	Replace the load-side encoder.	
					It is repeatable.	Replace the servo amplifier.	
70.A	Load-side encoder initial communication - Process error 1	(1)	The servo amplifier is malfunctioning.	Replace the servo amplifier, and then check the repeatability.	It is not repeatable.	Replace the servo amplifier.	[A] [B] [WB] [GF]
					It is repeatable.	Check (2).	
		(2)	A load-side encoder is malfunctioning.	Replace the load-side encoder, and then check the repeatability.	It is not repeatable.	Replace the load-side encoder.	
					It is repeatable.	Check (3).	
		(3)	Something near the device caused it.	Check the noise, ambient temperature, vibration, etc.	There is a problem in the surrounding.	Take countermeasures against its cause.	

Alarm No.: 70		Name: Load-side encoder initial communication error 1				
Alarm content		· An error occurred in the initial communication between the load-side encoder and servo amplifier.				
Detail No.	Detail name	Cause	Check method	Check result	Action	Target
70.B	Load-side encoder initial communication - Process error 2	Check it with the check method for [AL. 70.A].				
70.C	Load-side encoder initial communication - Process error 3					
70.D	Load-side encoder initial communication - Process error 4					
70.E	Load-side encoder initial communication - Process error 5					
70.F	Load-side encoder initial communication - Process error 6					

Alarm No.: 71		Name: Load-side encoder normal communication error 1					
Alarm content		· An error occurred in the communication between the load-side encoder and servo amplifier.					
Detail No.	Detail name	Cause		Check method	Check result	Action	Target
71.1	Load-side encoder normal communication - Receive data error 1	(1)	A load-side encoder cable is malfunctioning.	Check if the load-side encoder cable is disconnected or shorted.	It has a failure.	Repair or replace the cable.	[A] [B] [WB] [GF]
					It has no failure.	Check (2).	
		(2)	The external conductor of the encoder cable is not connected to the ground plate of the connector.	Check if it is connected.	It is not connected.	Connect it correctly.	
					It is connected.	Check (3).	
		(3)	The parameter setting of communication method is incorrect. [A]: [Pr. PC44] [B] [GF]: [Pr. PC26]	Check the parameter setting.	The setting is incorrect.	Set it correctly.	[A] [B] [GF]
					The setting is correct.	Check (4).	
		(4)	The servo amplifier is malfunctioning.	Replace the servo amplifier, and then check the repeatability.	It is not repeatable.	Replace the servo amplifier.	[A] [B] [WB] [GF]
					It is repeatable.	Check (5).	
		(5)	A load-side encoder is malfunctioning.	Replace the load-side encoder, and then check the repeatability.	It is not repeatable.	Replace the load-side encoder.	
					It is repeatable.	Check (6).	
		(6)	Something near the device caused it.	Check the noise, ambient temperature, vibration, etc.	There is a problem in the surrounding.	Take countermeasures against its cause.	

Alarm No.: 71		Name: Load-side encoder normal communication error 1				
Alarm content		· An error occurred in the communication between the load-side encoder and servo amplifier.				
Detail No.	Detail name	Cause	Check method	Check result	Action	Target
71.2	Load-side encoder normal communication - Receive data error 2	Check it with the check method for [AL. 71.1].				
71.3	Load-side encoder normal communication - Receive data error 3					
71.5	Load-side encoder normal communication - Transmission data error 1					
71.6	Load-side encoder normal communication - Transmission data error 2					
71.7	Load-side encoder normal communication - Transmission data error 3					
71.9	Load-side encoder normal communication - Receive data error 4					
71.A	Load-side encoder normal communication - Receive data error 5					

Alarm No.: 72		Name: Load-side encoder normal communication error 2					
Alarm content		· The load-side encoder detected an error signal.					
Detail No.	Detail name	Cause		Check method	Check result	Action	Target
72.1	Load-side encoder data error 1	(1)	The encoder detected a high speed/acceleration rate due to an oscillation or other factors.	Decrease the loop gain, and then check the repeatability.	It is not repeatable.	Use the encoder with low loop gain.	[A] [B] [WB] [GF]
					It is repeatable.	Check (2).	
		(2)	A load-side encoder is malfunctioning.	Replace the load-side encoder, and then check the repeatability.	It is not repeatable.	Replace the load-side encoder.	
					It is repeatable.	Check (3).	
		(3)	Something near the device caused it.	Check the noise, ambient temperature, vibration, etc.	There is a problem in the surrounding.	Take countermeasures against its cause.	
72.2	Load-side encoder data update error	(1)	A load-side encoder is malfunctioning.	Replace the load-side encoder, and then check the repeatability.	It is not repeatable.	Replace the load-side encoder.	
					It is repeatable.	Check (2).	
		(2)	Something near the device caused it.	Check the noise, ambient temperature, etc.	There is a problem in the surrounding.	Take countermeasures against its cause.	
72.3	Load-side encoder data waveform error	Check it with the check method for [AL. 72.2].					
72.4	Load-side encoder non-signal error	(1)	A signal of the load-side encoder has not been inputted.	Check if the load-side encoder cable is wired correctly.	It has a failure.	Review the wiring.	[A] [B] [WB] [GF]
					It has no failure.	Check (2).	
		(2)	Something near the device caused it.	Check the noise, ambient temperature, etc.	There is a problem in the surrounding.	Take countermeasures against its cause.	
72.5	Load-side encoder hardware error 1	Check it with the check method for [AL. 72.2].					
72.6	Load-side encoder hardware error 2						
72.9	Load-side encoder data error 2	Check it with the check method for [AL. 72.1].					

Alarm No.: 74		Name: Option card error 1					
Alarm content		· MR-J3-T10 came off. · MR-J3-T10 is not properly recognized.					
Detail No.	Detail name	Cause		Check method	Check result	Action	Target
74.1	Option card error 1	(1)	The MR-J3-T10 came off during the CC-Link IE communication.	Check if the MR-J3-T10 is mounted correctly.	It is not mounted correctly.	Install it correctly.	[RJ010]
					It is mounted correctly.	Check (2).	
		(2)	MR-J3-T10 is malfunctioning.	Replace the MR-J3-T10, and then check the repeatability.	It is not repeatable.	Replace the MR-J3-T10.	
					It is repeatable.	Check (3).	
		(3)	The servo amplifier is malfunctioning.	Replace the servo amplifier, and then check the repeatability.	It is not repeatable.	Replace the servo amplifier.	

Alarm No.: 74		Name: Option card error 1				
Alarm content		· MR-J3-T10 came off. · MR-J3-T10 is not properly recognized.				
Detail No.	Detail name	Cause	Check method	Check result	Action	Target
74.2	Option card error 2	Check it with the check method for [AL. 74.1].				
74.3	Option card error 3					
74.4	Option card error 4					
74.5	Option card error 5					

Alarm No.: 75		Name: Option card error 2					
Alarm content		· MR-J3-T10 came off.					
Detail No.	Detail name	Cause		Check method	Check result	Action	Target
75.3	Option card connection error	(1)	MR-J3-T10 came off.	Check if the MR-J3-T10 is mounted correctly.	It is not mounted correctly.	Install it correctly.	[RJ010]
					It is mounted correctly.	Check (2).	
		(2)	MR-J3-T10 is malfunctioning.	Replace the MR-J3-T10, and then check the repeatability.	It is not repeatable.	Replace the MR-J3-T10.	
					It is repeatable.	Check (3).	
		(3)	The servo amplifier is malfunctioning.	Replace the servo amplifier, and then check the repeatability.	It is not repeatable.	Replace the servo amplifier.	
75.4	Option card disconnected	(1)	MR-J3-T10 was not connected correctly.	Check if the MR-J3-T10 is mounted correctly.	It is not mounted correctly.	Install it correctly.	
					It is mounted correctly.	Check (2).	
		(2)	MR-J3-T10 is malfunctioning.	Replace the MR-J3-T10, and then check the repeatability.	It is not repeatable.	Replace the MR-J3-T10.	
					It is repeatable.	Check (3).	
		(3)	The servo amplifier is malfunctioning.	Replace the servo amplifier, and then check the repeatability.	It is not repeatable.	Replace the servo amplifier.	

Alarm No.: 79		Name: Functional safety unit diagnosis error					
Alarm content		· A diagnosis of the functional safety unit failed.					
Detail No.	Detail name	Cause		Check method	Check result	Action	Target
79.1	Functional safety unit power voltage error	(1)	The power supply of the functional safety unit is failure.	Check the installation of the functional safety unit.	It has a failure.	Install it correctly.	[A] [B] [GF]
					It has no failure.	Check (2).	
		(2)	The functional safety unit is malfunctioning.	Replace the functional safety unit, and then check the repeatability.	It is not repeatable.	Replace the functional safety unit.	
					It is repeatable.	Check (3).	
		(3)	The servo amplifier is malfunctioning.	Replace the servo amplifier, and then check the repeatability.	It is not repeatable.	Replace the servo amplifier.	
					It is repeatable.	Check (4).	
		(4)	Something near the device caused it.	Check the power supply for noise.	There is a problem in the surrounding.	Take countermeasures against its cause.	
79.2	Functional safety unit internal error	(1)	The functional safety unit is malfunctioning.	Replace the functional safety unit, and then check the repeatability.	It is not repeatable.	Replace the functional safety unit.	
					It is repeatable.	Check (2).	
		(2)	Something near the device caused it.	Check the power supply for noise.	There is a problem in the surrounding.	Take countermeasures against its cause.	

Alarm No.: 79		Name: Functional safety unit diagnosis error					
Alarm content		· A diagnosis of the functional safety unit failed.					
Detail No.	Detail name	Cause		Check method	Check result	Action	Target
79.3	Abnormal temperature of functional safety unit	(1)	Ambient temperature has exceeded 55 ℃.	Check the ambient temperature.	It is over 55 ℃.	Lower the ambient temperature.	[A] [B] [GF]
					It is less than 55 ℃.	Check (2).	
		(2)	Ambient temperature is less than 0 ℃.	Check the ambient temperature.	It is less than 0 ℃.	Increase the ambient temperature.	
					It is 0 ℃ or more.	Check (3).	
		(3)	The close mounting is out of specifications.	Check the specifications of close mounting.	It is out of specifications.	Mount it correctly.	
					It is within specifications.	Check (4).	
		(4)	An opening is clogged up.	Clean the opening and check the repeatability.	It is not repeatable.	Clean it periodically.	
					It is repeatable.	Check (5).	
		(5)	The functional safety unit is malfunctioning.	Replace the functional safety unit, and then check the repeatability.	It is not repeatable.	Replace the functional safety unit.	
					It is repeatable.	Check (6).	
		(6)	Something near the device caused it.	Check the power supply for noise.	There is a problem in the surrounding.	Take countermeasures against its cause.	
79.4	Servo amplifier error	(1)	The functional safety unit came off.	Check the installation of the functional safety unit.	It has a failure.	Install it correctly.	
					It has no failure.	Check (2).	
		(2)	The functional safety unit is malfunctioning.	Replace the functional safety unit, and then check the repeatability.	It is not repeatable.	Replace the functional safety unit.	
					It is repeatable.	Check (3).	
		(3)	The servo amplifier is malfunctioning.	Replace the servo amplifier, and then check the repeatability.	It is not repeatable.	Replace the servo amplifier.	
					It is repeatable.	Check (4).	
		(4)	Something near the device caused it.	Check the noise, ambient temperature, etc.	There is a problem in the surrounding.	Take countermeasures against its cause.	
79.5	Input device error	(1)	A signal of input device is not inputted correctly.	Check if the input device cable is wired correctly.	It has a failure.	Review the wiring.	
					It has no failure.	Check (2).	
		(2)	The input device setting parameter is not set correctly.	Check if the parameter is set correctly.	It is not set correctly.	Review the parameter.	
					It is set correctly.	Check (3).	
		(3)	The test pulse time was not set correctly.	Check the setting of [Pr. PSD26 Input device - Test pulse off time].	The test pulse width is longer than the set value.	Set the value longer.	
					The test pulse width is shorter than the set value.	Check (4).	
		(4)	The functional safety unit is malfunctioning.	Replace the functional safety unit, and then check the repeatability.	It is not repeatable.	Replace the functional safety unit.	
					It is repeatable.	Check (5).	
		(5)	Something near the device caused it.	Check the noise, ambient temperature, etc.	There is a problem in the surrounding.	Take countermeasures against its cause.	

Alarm No.: 79		Name: Functional safety unit diagnosis error					
Alarm content		- A diagnosis of the functional safety unit failed.					
Detail No.	Detail name	Cause		Check method	Check result	Action	Target
79.6	Output device error	(1)	A signal of an output device has not been outputted correctly.	Check if the output device cable is wired correctly. Or check if the load of the output device is within the specifications.	It has a failure.	Review the wiring or load.	[A] [B] [GF]
					It has no failure.	Check (2).	
		(2)	The test pulse time was not set correctly.	Check the setting of [Pr. PSD30 Output device - Test pulse off time].	The test pulse width is longer than the set value.	Set the value longer.	
					The test pulse width is shorter than the set value.	Check (3).	
		(3)	Current of the output device is excessive.	Check if the current is used within prescribed.	Not within prescribed.	Reduce the output current.	
					Within prescribed.	Check (4).	
		(4)	The functional safety unit is malfunctioning.	Replace the functional safety unit, and then check the repeatability.	It is not repeatable.	Replace the functional safety unit.	
					It is repeatable.	Check (5).	
		(5)	Something near the device caused it.	Check the noise, ambient temperature, etc.	There is a problem in the surrounding.	Take countermeasures against its cause.	
79.7	Mismatched input signal error	(1)	A mismatch of input signal DI_A and DI_B continued for a fixed time ([Pr. PSD18] to [Pr. PSD23]).	Check if the input device cable is wired correctly.	It has a failure.	Review the wiring.	
					It has no failure.	Check (2).	
		(2)	An input mismatch time was not set correctly.	Check the settings of [Pr. PSD18 Mismatch permissible time DI1] to [Pr. PSD23 Mismatch permissible time DI6].	The mismatched time is longer than the set value.	Set the value longer.	
					The mismatched time is shorter than the set value.	Check (3).	
		(3)	The functional safety unit is malfunctioning.	Replace the functional safety unit, and then check the repeatability.	It is not repeatable.	Replace the functional safety unit.	
					It is repeatable.	Check (4).	
		(4)	Something near the device caused it.	Check the noise, ambient temperature, etc.	There is a problem in the surrounding.	Take countermeasures against its cause.	
79.8	Position feedback fixing error	(1)	The position feedback data do not change within the position feedback fixing error detection time [Pr. PSA22].	Check the [Pr. PSA22] setting.	It is not set correctly.	Review the parameter.	
					It is set correctly.	Check (2).	
		(2)	The position feedback data do not change.	Check the feedback data by rotating the servo motor.	The position feedback data changes.	Perform an operation which rotates the servo motor within the position feedback fixing error detection time [Pr. PSA22].	
					The position feedback data do not change.	Check (3).	
		(3)	The servo motor is malfunctioning.	Replace the servo motor, and then check the repeatability.	It is not repeatable.	Replace the servo motor.	
					It is repeatable.	Check (4).	
		(4)	The functional safety unit is malfunctioning.	Replace the functional safety unit, and then check the repeatability.	It is not repeatable.	Replace the functional safety unit.	

Alarm No.: 7A		Name: Parameter setting error (safety observation function)					
Alarm content		· A parameter of the functional safety unit failed.					
Detail No.	Detail name	Cause		Check method	Check result	Action	Target
7A.1	Parameter verification error (safety observation function)	(1)	A parameter of the functional safety unit is incorrect.	Review the parameter.	It is not repeatable.	Set the parameter correctly.	[A] [B] [GF]
					It is repeatable.	Check (2).	
		(2)	The functional safety unit is malfunctioning.	Replace the functional safety unit, and then check the repeatability.	It is not repeatable.	Replace the functional safety unit.	
					It is repeatable.	Check (3).	
		(3)	Something near the device caused it.	Check the noise, ambient temperature, etc.	There is a problem in the surrounding.	Take countermeasures against its cause.	
7A.2	Parameter setting range error (safety observation function)	(1)	The initial settings for the functional safety unit have not been finished.	Check the [Pr. PSA01] setting.	It is not enabled.	Enable the setting with checking parameter contents.	
					It is enabled.	Check (2).	
		(2)	A parameter of the functional safety unit was set out of range.	Check the value of set parameters.	It is out of setting range.	Set it within the range.	
7A.3	Parameter combination error (safety observation function)	(1)	A parameter of the functional safety unit or servo amplifier is incorrect.	Check the parameter settings of the functional safety unit and servo amplifier. Functional safety unit: [Pr. PSA02], [Pr. PSA18] to [Pr. PSA21], [Pr. PSC03], [Pr. PSD01] to [Pr. PSD17], [Pr. PSD26] Servo amplifier: [Pr. PA14]	It is not set correctly.	Set the parameter correctly.	
7A.4	Functional safety unit combination error (safety observation function)	(1)	A combination of functional safety unit and servo amplifier is incorrect.	Check if correct combination of servo amplifier is connected.	A different servo amplifier is connected.	Return to the servo amplifier which was combined with the functional safety unit and was set the safety observation function, or initialize the setting.	

Alarm No.: 7B		Name: Encoder diagnosis error (safety observation function)					
Alarm content		· Error occurred in encoder.					
Detail No.	Detail name	Cause		Check method	Check result	Action	Target
7B.1	Encoder diagnosis error 1 (safety observation function)	(1)	An encoder cable is malfunctioning.	Check if the encoder cable is disconnected or shorted.	It has a failure.	Repair or replace the cable.	[A] [B] [GF]
					It has no failure.	Check (2).	
		(2)	An encoder is malfunctioning.	Replace the servo motor, and then check the repeatability.	It is not repeatable.	Replace the servo motor.	
					It is repeatable.	Check (3).	
		(3)	The functional safety unit is malfunctioning.	Replace the functional safety unit, and then check the repeatability.	It is not repeatable.	Replace the functional safety unit.	
					It is repeatable.	Check (4).	
		(4)	The servo amplifier is malfunctioning.	Replace the servo amplifier, and then check the repeatability.	It is not repeatable.	Replace the servo amplifier.	
					It is repeatable.	Check (5).	
		(5)	Something near the device caused it.	Check the noise, ambient temperature, vibration, etc.	There is a problem in the surrounding.	Take countermeasures against its cause.	

Alarm No.: 7B		Name: Encoder diagnosis error (safety observation function)					
Alarm content		Error occurred in encoder.					
Detail No.	Detail name	Cause		Check method	Check result	Action	Target
7B.2	Encoder diagnosis error 2 (safety observation function)	Check it with the check method for [AL. 7B.1].					
7B.3	Encoder diagnosis error 3 (safety observation function)						
7B.4	Encoder diagnosis error 4 (safety observation function)	(1)	Ambient temperature of the encoder has exceeded 40 °C.	Check the ambient temperature of the encoder.	It is over 40 °C.	Lower the ambient temperature.	[A] [B] [GF]
					It is 40 °C or less.	Check (2).	
		(2)	Ambient temperature of the encoder is less than 0 °C.	Check the ambient temperature of the encoder.	It is 0 °C or less.	Increase the ambient temperature.	
					It is 0 °C or more.	Check (3).	
		(3)	Servo motor is overloaded.	Check the effective load ratio.	The effective load ratio is high.	Reduce the load or review the operation pattern.	
					The effective load ratio is small.	Check (4).	
		(4)	The thermal sensor in the encoder is malfunctioning.	Replace the servo motor, and then check the repeatability.	It is not repeatable.	Replace the servo motor.	
					It is repeatable.	Check (5).	
		(5)	The functional safety unit is malfunctioning.	Replace the functional safety unit, and then check the repeatability.	It is not repeatable.	Replace the functional safety unit.	

Alarm No.: 7C		Name: Functional safety unit communication diagnosis error (safety observation function)					
Alarm content		The network communication had an error in the functional safety unit.					
Detail No.	Detail name	Cause		Check method	Check result	Action	Target
7C.1	Functional safety unit communication setting error (safety observation function)	(1)	Communication cycle does not match.	Check the communication cycle setting ([Pr. PSC01]) of the servo system controller and the functional safety unit.	Communication cycle setting is incorrect.	Set it correctly.	[B] [GF]
					Communication cycle setting is correct.	Check (2).	
		(2)	The time taken for the detection of safety communication errors is not set correctly.	Refer to "MR-D30 Instruction Manual" and check the setting.	It is not set correctly.	Set it correctly.	[GF]
					It is set correctly.	Check (3).	
		(3)	The functional safety unit is malfunctioning.	Replace the functional safety unit, and then check the repeatability.	It is not repeatable.	Replace the functional safety unit.	[B] [GF]
					It is repeatable.	Check (4).	
		(4)	Something near the device caused it.	Check the noise, ambient temperature, etc.	There is a problem in the surrounding.	Take countermeasures against its cause.	

Alarm No.: 7C		Name: Functional safety unit communication diagnosis error (safety observation function)					
Alarm content		The network communication had an error in the functional safety unit.					
Detail No.	Detail name	Cause		Check method	Check result	Action	Target
7C.2	Functional safety unit communication data error (safety observation function)	(1)	The time taken for the detection of safety communication errors is not set correctly.	Refer to "MR-D30 Instruction Manual" and check the setting.	It is not set correctly.	Set it correctly.	[GF]
					It is set correctly.	Check (2).	
		(2)	An error occurred at the safety master station side.	Check if an alarm occurs at the safety master station.	It is occurring.	Refer to the troubleshooting for the master station and take countermeasures.	
					It did not occur.	Check (3).	
		(3)	An error occurred at the servo system controller side.	Check if the settings of the servo system controller side are correct.	It has a failure.	Set it correctly.	[B]
					It has no failure.	Check (4).	
		(4)	[B]: Check it with the check method for [AL. 34.1]. [GF]: Check it with the check method for [AL. 8D.1].				[B] [GF]

Alarm No.: 7D		Name: Safety observation error					
Alarm content		· The safety observation function detected an error.					
Detail No.	Detail name	Cause		Check method	Check result	Action	Target
7D.1	Stop observation error	(1)	During activation of SOS function, the position of the servo motor has changed by more than the SOS allowance value set by parameter.	Check that the actual servo motor position is higher than the setting value of [Pr. PSA05].	The travel distance of the servo motor is larger than the setting value in [Pr. PSA05].	Review the alarm level.	[A] [B] [GF]
					The travel distance of the servo motor is smaller than the alarm detection level.	Check (2).	
		(2)	During activation of SOS function, the servo motor speed has changed by larger than the SOS allowance value set by parameter, and that state has continued for longer than the set time (specified by [Pr. PSA15]).	The actual servo motor speed is higher than the setting value of [Pr. PSA04].	The servo motor speed is higher than the setting value in [Pr. PSA04].	Review the parameter setting.	
					The servo motor speed is higher than the setting value in [Pr. PSA15] and equal to or lower than that in [Pr. PSA04].	Check (3).	
		(3)	During activation of SOS function, the speed command has changed by larger than the SOS allowance value set by parameter, and that state has continued for longer than the set time (specified by [Pr. PSA15]).	Check if the command from the controller is over the standstill speed set in [Pr. PSA04].	The command from the controller is over the setting valued in [Pr. PSA04].	Check the operation pattern.	
					The command from controller is higher than the setting value in [Pr. PSA15] and equal to or lower than that in [Pr. PSA04].	Check (4).	
		(4)	An encoder is malfunctioning.	Replace the servo motor, and then check the repeatability.	It is not repeatable.	Replace the servo motor.	
					It is repeatable.	Check (5).	
		(5)	The functional safety unit is malfunctioning.	Replace the functional safety unit, and then check the repeatability.	It is not repeatable.	Replace the functional safety unit.	
					It is repeatable.	Check (6).	
		(6)	The servo amplifier is malfunctioning.	Replace the servo amplifier, and then check the repeatability.	It is not repeatable.	Replace the servo motor.	
					It is repeatable.	Check (7).	
		(7)	Something near the device caused it.	Check the noise, ambient temperature, vibration, etc.	There is a problem in the surrounding.	Take countermeasures against its cause.	

Alarm No.: 7D		Name: Safety observation error					
Alarm content		The safety observation function detected an error.					
Detail No.	Detail name	Cause		Check method	Check result	Action	Target
7D.2	Speed observation error	(1)	The command pulse frequency is high.	Check the command pulse frequency.	The command pulse frequency is high.	Check operation pattern.	[A] [B] [GF]
					The command pulse frequency is low.	Check (2).	
		(2)	The settings of the electronic gear are incorrect.	Check the setting value of the electronic gear.	The setting value is incorrect.	Review the settings.	
					The setting value is correct.	Check (3).	
		(3)	The command from the controller is excessive.	Check if the command from the controller is the SLS speed ([Pr. PSA11] to [Pr. PSA14]) or more.	It is over the permissible speed.	Check operation pattern.	
					It is less than the permissible speed.	Check (4).	
		(4)	A larger speed command than the SLS speed ([Pr. PSA11] to [Pr. PSA14]) was inputted.	Check that the actual servo motor speed is higher than the setting value of the SLS speed.	The servo motor speed is higher than the SLS speed.	Review the setting value of the SLS speed.	
					The servo motor speed is lower than the SLS speed.	Check (5).	
		(5)	The servo system is unstable and oscillating.	Check if the servo motor is oscillating.	It is oscillating.	Adjust the servo gain. Or reduce the load.	
					It is not oscillating.	Check (6).	
		(6)	The velocity waveform has overshot.	Check if it is overshooting because the acceleration time constant is too short.	It is overshooting.	Increase the acceleration/deceleration time constant.	
					It is not overshooting.	Check (7).	
		(7)	The connection destination of the encoder cable is incorrect.	Check the connection destination of the encoder.	It is not correct.	Wire it correctly.	
					It is correct.	Check (8).	
		(8)	The encoder or linear encoder is malfunctioning.	Replace the servo motor, and then check the repeatability.	It is not repeatable.	Replace the servo motor.	
					It is repeatable.	Check (9).	
		(9)	The functional safety unit is malfunctioning.	Replace the functional safety unit, and then check the repeatability.	It is not repeatable.	Replace the functional safety unit.	
					It is repeatable.	Check (10).	
		(10)	The servo amplifier is malfunctioning.	Replace the servo amplifier, and then check the repeatability.	It is not repeatable.	Replace the servo amplifier.	
					It is repeatable.	Check (11).	
		(11)	Something near the device caused it.	Check the noise, ambient temperature, etc.	There is a problem in the surrounding.	Take countermeasures against its cause.	

Alarm No.: 82		Name: Master-slave operation error 1				
Alarm content		Driver communication error was detected.				
Detail No.	Detail name	Cause	Check method	Check result	Action	Target
82.1	Master-slave operation error 1	Check it with the check method for [AL. 34.1].				[B] (slave)

Alarm No.: 84	Name: Network module initialization error						
Alarm content	· The network module is not connected. · An error occurred at initialization of the network module.						
Detail No.	Detail name	Cause		Check method	Check result	Action	Target
84.1	Network module undetected error	(1)	The network module was disconnected.	Check if the network module is connected correctly.	It is not connected correctly.	Connect it correctly.	[Other]
					It is connected correctly.	Check (2).	
		(2)	Something near the device caused it.	Check the noise, ambient temperature, etc. Refer to "Noise reduction techniques" section in each servo amplifier instruction manual for the noise reduction techniques.	There is a problem in the surrounding.	Take countermeasures against its cause.	
					There is no problem in the surrounding.	Check (3).	
		(3)	The network module is malfunctioning.	Replace the network module, and then check the repeatability.	It is not repeatable.	Replace the network module.	
					It is repeatable.	Check (4).	
		(4)	The servo amplifier is malfunctioning.	Replace the servo amplifier, and then check the repeatability.	It is not repeatable.	Replace the servo amplifier.	
84.2	Network module initialization error 1	(1)	The network module was disconnected.	Check if the network module is connected correctly.	It is not connected correctly.	Connect it correctly.	
					It is connected correctly.	Check (2).	
		(2)	A network module, which is not compatible with the servo amplifier, has been connected.	Check if the network module is compatible with the servo amplifier.	It is not compatible.	Replace with a network module compatible with the servo amplifier.	
					It is compatible.	Check (3).	
		(3)	A network cable was disconnected.	Check if the network cable is connected correctly.	It is not connected.	Connect it correctly.	
					It is connected.	Check (4).	
		(4)	The wiring of the network cable was incorrect.	Check if the wiring of network cable is correct.	The wiring is incorrect.	Wire it correctly.	
					The wiring is correct.	Check (5).	
		(5)	A network cable was disconnected.	Check if the network cable is malfunctioning.	It has a failure.	Replace the network cable.	
					It has no failure.	Check (6).	
		(6)	Something near the device caused it.	Check the noise, ambient temperature, etc. Refer to "Noise reduction techniques" section in each servo amplifier instruction manual for the noise reduction techniques.	There is a problem in the surrounding.	Take countermeasures against its cause.	
					There is no problem in the surrounding.	Check (7).	
		(7)	The network module is malfunctioning.	Replace the network module, and then check the repeatability.	It is not repeatable.	Replace the network module.	
					It is repeatable.	Check (8).	
		(8)	The servo amplifier is malfunctioning.	Replace the servo amplifier, and then check the repeatability.	It is not repeatable.	Replace the servo amplifier.	
84.3	Network module initialization error 2	Check it with the check method for [AL. 84.2].					

Alarm No.: 85		Name: Network module error					
Alarm content		· The network module was disconnected. · An error occurred in the network module. (Refer to section 1.7.)					
Detail No.	Detail name	Cause		Check method	Check result	Action	Target
85.1	Network module error 1	(1)	The network module was disconnected.	Check if the network module is connected correctly.	It is not connected correctly.	Connect it correctly.	[Other]
					It is connected correctly.	Check (2).	
		(2)	A network cable was disconnected.	Check if the network cable is connected correctly.	It is not connected.	Connect it correctly.	
					It is connected.	Check (3).	
		(3)	The wiring of the network cable was incorrect.	Check if the wiring of network cable is correct.	The wiring is incorrect.	Wire it correctly.	
					The wiring is correct.	Check (4).	
		(4)	A network cable was disconnected.	Check if the network cable is malfunctioning.	It has a failure.	Replace the network cable.	
					It has no failure.	Check (5).	
		(5)	The setting of the controller is incorrect.	Check the controller setting.	It is incorrect.	Review the settings.	
					It is correct.	Check (6).	
		(6)	Something near the device caused it.	Check the noise, ambient temperature, etc. Refer to "Noise reduction techniques" section in each servo amplifier instruction manual for the noise reduction techniques.	There is a problem in the surrounding.	Take countermeasures against its cause.	
					There is no problem in the surrounding.	Check (7).	
		(7)	The network module is malfunctioning.	Replace the network module, and then check the repeatability.	It is not repeatable.	Replace the network module.	
					It is repeatable.	Check (8).	
		(8)	The servo amplifier is malfunctioning.	Replace the servo amplifier, and then check the repeatability.	It is not repeatable.	Replace the servo amplifier.	
					It is repeatable.	Check (9).	
		(9)	The controller is malfunctioning.	Replace the controller, and then check the repeatability.	It is not repeatable.	Replace the controller.	
85.2	Network module error 2	Check it with the check method for [AL. 85.1].					
85.3	Network module error 3						

Alarm No.: 86		Name: Network communication error					
Alarm content		· An error occurred in the network module. · An error occurred in the network communication.					
Detail No.	Detail name	Cause		Check method	Check result	Action	Target
86.1	Network communication error 1	(1)	The network module was disconnected.	Check if the network module is connected correctly.	It is not connected correctly.	Connect it correctly.	[Other]
					It is connected correctly.	Check (2).	
		(2)	A network cable was disconnected.	Check if the network cable is connected correctly.	It is not connected.	Turn off the control circuit power supply of the servo amplifier, and then connect the network cable correctly.	[GF] [Other]
					It is connected.	Check (3).	
		(3)	The wiring of the network cable was incorrect.	Check if the wiring of network cable is correct.	The wiring is incorrect.	Wire it correctly.	
					The wiring is correct.	Check (4).	
		(4)	A network cable was disconnected.	Check if the network cable is malfunctioning.	It has a failure.	Replace the network cable.	
					It has no failure.	Check (5).	
		(5)	The network was disconnected by a wrong procedure.	Check if the network was disconnected according to the kind of network.	It was not performed.	Perform it.	
					It was performed.	Check (6).	
		(6)	Data transmission from the controller was interrupted for a certain period of time.	Check if data transmission from the controller is not interrupted.	It is interrupted.	Review the controller communication setting.	
					It is not interrupted.	Check (7).	
		(7)	The setting of the controller is incorrect.	Check the controller setting.	It is incorrect.	Review the settings.	
					It is correct.	Check (8).	
		(8)	Something near the device caused it.	Check the noise, ambient temperature, etc. Refer to "Noise reduction techniques" section in each servo amplifier instruction manual for the noise reduction techniques.	There is a problem in the surrounding.	Take Countermeasures against its cause.	
					There is no problem in the surrounding.	Check (9).	
		(9)	The network module is malfunctioning.	Replace the network module, and then check the repeatability.	It is not repeatable.	Replace the network module.	[Other]
					It is repeatable.	Check (10).	
		(10)	The servo amplifier is malfunctioning.	Replace the servo amplifier, and then check the repeatability.	It is not repeatable.	Replace the servo amplifier.	[GF] [Other]
					It is repeatable.	Check (11).	
		(11)	The controller is malfunctioning.	Replace the controller, and then check the repeatability.	It is not repeatable.	Replace the controller.	
86.2	Network communication error 2	Check it with the check method for [AL. 86.1].					
86.3	Network communication error 3						
86.4	Network communication error 4						

Alarm No.: 8A		Name: USB communication time-out error/serial communication time-out error/Modbus RTU communication time-out error					
Alarm content		· Communication between the servo amplifier and a personal computer/controller stopped for the specified time or longer. · An error occurred in USB communication, serial communication (Mitsubishi Electric general-purpose AC servo protocol), or Modbus RTU communication.					
Detail No.	Detail name	Cause		Check method	Check result	Action	Target
8A.1	USB communication time-out error/ serial communication time-out error	(1)	Communication commands have not been transmitted.	Check if a command was transmitted from the personal computer, etc.	It was not transmitted.	Transmit a command.	[A] [B] [WB] [RJ010] [GF]
					It was transmitted.	Check (2).	
		(2)	A communication cable was disconnected.	Replace the communication cable, and then check the repeatability.	It is not repeatable.	Replace the communication cable.	
					It is repeatable.	Check (3).	
		(3)	The servo amplifier is malfunctioning.	Replace the servo amplifier, and then check the repeatability.	It is not repeatable.	Replace the servo amplifier.	
8A.2	Modbus RTU communication time-out error	(1)	Communication commands have not been transmitted.	Check if a command was transmitted from the controller, etc.	It was not transmitted.	Transmit a command.	[A]
					It was transmitted.	Check (2).	
		(2)	A communication cable was disconnected.	Replace the communication cable, and then check the repeatability.	It is not repeatable.	Replace the communication cable.	
					It is repeatable.	Check (3).	
		(3)	The servo amplifier is malfunctioning.	Replace the servo amplifier, and then check the repeatability.	It is not repeatable.	Replace the servo amplifier.	

Alarm No.: 8D		Name: CC-Link IE communication error					
Alarm content		MR-J3-T10 came off. An error occurred in CC-Link IE communication.					
Detail No.	Detail name	Cause		Check method	Check result	Action	Target
8D.1	CC-Link IE communication error 1	(1)	The MR-J3-T10 came off during the CC-Link IE communication.	Check if [AL. 74 Option card error 1] occurred with alarm history.	It is occurring.	Check it with the check method for [AL. 74].	[RJ010]
					It did not occur.	Check (2).	
		(2)	The Ethernet cable was disconnected.	Check the Ethernet cable connection.	It is disconnected.	Turn off the control circuit power supply of the servo amplifier, and then connect the Ethernet cable.	[RJ010] [GF]
					It is connected.	Check (3).	
		(3)	The CC-Link IE communication was disconnected by using a wrong procedure.	Check if the communication was disconnected by using the correct procedure.	The communication was disconnected by using a wrong procedure.	Follow the correct procedure for disconnecting the communication.	
					The communication was disconnected by using the correct procedure.	Check (4).	
		(4)	The wiring of the Ethernet cable was incorrect.	Check if the wiring of Ethernet cable is correct.	The wiring is incorrect.	Wire it correctly.	
					The wiring is correct.	Check (5).	
		(5)	An Ethernet cable was disconnected.	Check if the Ethernet cable is malfunctioning.	It has a failure.	Replace the Ethernet cable.	
					It has no failure.	Check (6).	
		(6)	The transmission status of the CC-Link IE communication is abnormal.	Check the noise, ambient temperature, etc.	It has a failure.	Take countermeasures against its cause.	
					It has no failure.	Check (7).	
		(7)	MR-J3-T10 is malfunctioning.	Replace the MR-J3-T10, and then check the repeatability.	It is not repeatable.	Replace the MR-J3-T10.	
					It is repeatable.	Check (8).	
		(8)	The servo amplifier is malfunctioning.	Replace the servo amplifier, and then check the repeatability.	It is not repeatable.	Replace the servo amplifier.	[RJ010]
					It is repeatable.	Check (9).	
		(9)	The master station is malfunctioning.	Check if the master station is malfunctioning.	It has a failure.	Replace the master station.	[RJ010] [GF]
8D.2	CC-Link IE communication error 2	Check it with the check method for [AL. 8D.1].					
8D.3	Master station setting error 1	(1)	The station No. is set to a value other than 1 to 120 with the master station.	Check the [Pr. Po02] setting.	The setting value is incorrect.	Set it correctly.	[RJ010]
					The setting value is correct.	Check (2).	
		(2)	The network number is set to a value other than 1 to 239 with the master station.	Check the [Pr. Po03] setting.	The setting value is incorrect.	Set it correctly.	
					The setting value is correct.	Check (3).	
		(3)	MR-J3-T10 is malfunctioning.	Replace the MR-J3-T10, and then check the repeatability.	It is not repeatable.	Replace the MR-J3-T10.	
					It is repeatable.	Check (4).	
		(4)	The servo amplifier is malfunctioning.	Replace the servo amplifier, and then check the repeatability.	It is not repeatable.	Replace the servo amplifier.	
					It is repeatable.	Check (5).	
		(5)	The master station is malfunctioning.	Check if the master station is malfunctioning.	It has a failure.	Replace the master station.	

Alarm No.: 8D		Name: CC-Link IE communication error					
Alarm content		· MR-J3-T10 came off. · An error occurred in CC-Link IE communication.					
Detail No.	Detail name	Cause		Check method	Check result	Action	Target
8D.5	Master station setting error 2	(1)	A reserved station has been selected by the master station, and the cyclic communication has stopped.	Check if a reserved station is selected.	It is selected.	Cancel the reserved station.	[RJ010]
8D.6	CC-Link IE communication error 3	Check it with the check method for [AL. 8D.1].					
8D.7	CC-Link IE communication error 4	(1)	The transmission status of the CC-Link IE communication is abnormal.	Check the noise, ambient temperature, etc.	It has a failure.	Take countermeasures against its cause.	[RJ010] [GF]
					It has no failure.	Check (2).	
		(2)	MR-J3-T10 is malfunctioning.	Replace the MR-J3-T10, and then check the repeatability.	It is not repeatable.	Replace the MR-J3-T10.	[RJ010]
					It is repeatable.	Check (3).	
		(3)	The servo amplifier is malfunctioning.	Replace the servo amplifier, and then check the repeatability.	It is not repeatable.	Replace the servo amplifier.	[RJ010] [GF]
					It is repeatable.	Check (4).	
		(4)	The master station is malfunctioning.	Check if the master station is malfunctioning.	It has a failure.	Replace the master station.	
8D.8	CC-Link IE communication error 5	Check it with the check method for [AL. 8D.7].					
8D.9	Synchronization error 1	Check it with the check method for [AL. 8D.1].					
8D.A	Synchronization error 2						

Alarm No.: 8E		Name: USB communication error/serial communication error/Modbus RTU communication error					
Alarm content		· A communication error occurred between the servo amplifier and a personal computer/controller. · An error occurred in USB communication, serial communication (Mitsubishi Electric general-purpose AC servo protocol), or Modbus RTU communication.					
Detail No.	Detail name	Cause		Check method	Check result	Action	Target
8E.1	USB communication receive error/ serial communication receive error	(1)	The setting of the personal computer, etc. is incorrect.	Check the setting of the personal computer, etc.	It is incorrect.	Review the settings.	[A] [B] [WB] [RJ010] [GF]
					It is correct.	Check (2).	
		(2)	A communication cable is malfunctioning.	Check the communication cable, and then check the repeatability.	It is not repeatable.	Replace the communication cable.	
					It is repeatable.	Check (3).	
		(3)	The servo amplifier is malfunctioning.	Replace the servo amplifier, and then check the repeatability.	It is not repeatable.	Replace the servo amplifier.	
8E.2	USB communication checksum error/ serial communication checksum error	(1)	The setting of the personal computer, etc. is incorrect.	Check the setting of the personal computer, etc.	It is incorrect.	Review the settings.	
8E.3	USB communication character error/ serial communication character error	(1)	The transmitted character is out of specifications.	Check the character code at the time of transmission.	The transmitted character is out of specifications.	Correct the transmission data.	[A] [B] [WB] [RJ010]
					The transmitted character is within specifications.	Check (2).	
		(2)	The communication protocol is failure.	Check if transmission data supports the communication protocol.	It is not conforming.	Modify the transmission data according to the communication protocol.	
					It is conforming.	Check (3).	
		(3)	The setting of the personal computer, etc. is incorrect.	Check the setting of the personal computer, etc.	It is incorrect.	Review the settings.	
8E.4	USB communication command error/ serial communication command error	(1)	The transmitted command is out of specifications.	Check the command at the time of transmission.	The transmitted command is out of specifications.	Correct the transmission data.	
					The transmitted command is within specifications.	Check (2).	
		(2)	The communication protocol is failure.	Check if transmission data supports the communication protocol.	It is not conforming.	Modify the transmission data according to the communication protocol.	
					It is conforming.	Check (3).	
		(3)	The setting of the personal computer, etc. is incorrect.	Check the setting of the personal computer, etc.	It is incorrect.	Review the settings.	
8E.5	USB communication data number error/serial communication data number error	(1)	The transmitted data number is out of specifications.	Check the data number at the time of transmission.	The transmitted data number is out of specifications.	Correct the transmission data.	
					The transmitted data number is within specifications.	Check (2).	
		(2)	The communication protocol is failure.	Check if transmission data supports the communication protocol.	It is not conforming.	Modify the transmission data according to the communication protocol.	
					It is conforming.	Check (3).	
		(3)	The setting of the personal computer, etc. is incorrect.	Check the setting of the personal computer, etc.	It is incorrect.	Review the settings.	

Alarm No.: 8E		Name: USB communication error/serial communication error/Modbus RTU communication error					
Alarm content		· A communication error occurred between the servo amplifier and a personal computer/controller. · An error occurred in USB communication, serial communication (Mitsubishi Electric general-purpose AC servo protocol), or Modbus RTU communication.					
Detail No.	Detail name	Cause		Check method	Check result	Action	Target
8E.6	Modbus RTU communication receive error	(1)	The setting of the controller, servo amplifier, etc. is incorrect.	Check the setting of the controller, servo amplifier, etc. (such as communication protocol selection, baud rate, parity).	It is incorrect.	Review the settings.	[A]
					It is correct.	Check (2).	
		(2)	A communication cable is malfunctioning.	Check the communication cable, and then check the repeatability.	It is not repeatable.	Replace the communication cable.	
					It is repeatable.	Check (3).	
		(3)	The servo amplifier is malfunctioning.	Replace the servo amplifier, and then check the repeatability.	It is not repeatable.	Replace the servo amplifier.	
8E.7	Modbus RTU communication message frame error	(1)	The communication protocol is failure.	Check if transmission data conforms the communication protocol.	It is not conforming.	Modify the transmission data according to the communication protocol.	
					It is conforming.	Check (2).	
		(2)	The setting of the controller, servo amplifier, etc. is incorrect.	Check the setting of the controller, servo amplifier, etc. (such as communication protocol selection, baud rate, parity).	It is incorrect.	Review the settings.	
8E.8	Modbus RTU communication CRC error	Check it with the check method for [AL. 8E.7].					

Alarm No.: 88888		Name: Watchdog					
Alarm content		· [RJ010]: MR-J3-T10 came off. · A part such as CPU is malfunctioning.					
Detail No.	Detail name	Cause		Check method	Check result	Action	Target
88_/ 8888_	Watchdog	(1)	The MR-J3-T10 came off during the CC-Link IE communication.	Check if [AL. 74 Option card error 1] occurred with alarm history.	It is occurring.	Check it with the check method for [AL. 74].	[RJ010]
					It did not occur.	Check (2).	
		(2)	A part in the servo amplifier is failure.	Replace the servo amplifier, and then check the repeatability.	It is not repeatable.	Replace the servo amplifier.	[A] [B] [WB] [RJ010] [GF]

1.5 Remedies for warnings

⚠CAUTION

If [AL. E3 Absolute position counter warning] occurs, remove the cause of the warning, and always make home position setting again. Otherwise, it may cause an unexpected operation.

Point

When any of the following alarms has occurred, do not cycle the power of the servo amplifier repeatedly to restart. Doing so will cause a malfunction of the servo amplifier and servo motor. If the power of the servo amplifier is switched off/on during the alarms, allow more than 30 minutes for cooling before resuming operation.

- [AL. 91 Servo amplifier overheat warning]
- [AL. E0 Excessive regeneration warning]
- [AL. E1 Overload warning 1]
- [AL. E2 Servo motor overheat warning]
- [AL. EC Overload warning 2]

Warnings (except [AL. F0 Tough drive warning]) are not recorded in the alarm history.

If [AL. E6], [AL. E7], [AL. E9], [AL. EA], or [AL. EB] occurs, the amplifier will be the servo-off status. If any other warning occurs, operation can be continued but an alarm may take place or proper operation may not be performed.
Remove the cause of warning according to this section. Use MR Configurator2 to refer to the cause of warning occurrence.

Alarm No.: 90		Name: Home position return incomplete warning					
Alarm content		· A home position return did not complete normally with the positioning function.					
Detail No.	Detail name	Cause		Check method	Check result	Action	Target
90.1	Home position return incomplete	(1)	An automatic operation was executed at home position return incompletion.	Check if the home position return was not executed (the following devices are not off.). [A]: ZP (Home position return completion) [GF]: ZP2 (Home position return completion 2)	A home position return was not executed.	Execute a home position return.	[A] [GF]
					A home position return was executed.	Check (2).	
		(2)	A positioning operation was executed without home position setting with absolute position after [AL. 25 Absolute position erased] occurred.	Check if [AL. 25 Absolute position erased] occurred using alarm history.	[AL. 25 Absolute position erased] occurred.	Check the battery voltage and battery cable if they have a failure and execute a home position return after remove the failure.	
					[AL. 25 Absolute position erased] did not occur.	Check (3).	
		(3)	With the indexer method, [AL. E3 Absolute position counter warning] occurred simultaneously with the alarm.	Check if [AL. 90.1] occurred simultaneously with start of the positioning operation.	[AL. 90.1] did not occur simultaneously with start of the positioning operation but occurred during positioning operation.	Remove the cause of [AL. E3], and perform home position return. (Check it with the check method for [AL. E3].)	
					[AL. 90.1] occurred simultaneously with start of the positioning operation.	Check (4).	
		(4)	ZP (Home position return completion) turned off after the home position return was executed.	Check if ZP (Home position return completion) is off.	ZP (Home position return completion) is off.	Check the conditions if ZP (Home position return completion) can be off. (Refer to section 2.3 of "MR-J4-_A_-RJ Servo Amplifier Instruction Manual (Positioning Mode)")	[A]
		(5)	A software stroke limit/ stroke limit was detected.	In the I/O mode, check if [AL. 99 Stroke limit warning] occurred when "_ _ _ 1" is set to [Pr. PD12], or [AL. 98 Software stroke limit warning] occurred when "_ 1 _ _" is set to [Pr. PD12].	[AL. 98 Software stroke limit warning] or [AL. 99 Stroke limit warning] occurred in the I/O mode.	Move the machine to within the limit range, and then make a home position return. When the home position is fixed, enable servo-on again.	[GF]
					[AL. 98 Software stroke limit warning] or [AL 99 Stroke limit warning] did not occur. Or the motion mode is set.	Check (6).	
		(6)	ZP2 (Home position return completion 2) turned off after the home position return was executed.	Check if ZP2 (Home position return completion 2) is off.	ZP2 (Home position return completion 2) is off.	Check the conditions in which ZP2 (Home position return completion 2) is off. (□MR-J4-_GF_(-RJ) Servo Amplifier Instruction Manual (I/O Mode)	

Alarm No.: 90	Name: Home position return incomplete warning						
Alarm content	· A home position return did not complete normally with the positioning function.						
Detail No.	Detail name	Cause		Check method	Check result	Action	Target
90.2	Home position return abnormal termination	(1)	The proximity dog is not connected to DOG.	Check if the proximity dog is connected correctly.	It is not connected.	Connect it correctly.	[A] [GF]
					It is connected.	Check (2).	
		(2)	The stroke limit was detected after the home position return start.	Check if the stroke limit is connected correctly. Or check if the stroke limit is not reached.	The stroke limit is not connected. Or the stroke limit is reached.	Connect the stroke limit correctly. Review the stroke limit position.	
					The stroke limit is connected. Or the stroke limit is not reached.	Check (3).	
		(3)	A home position return speed did not decelerate to a creep speed.	Check if the proximity dog turned off before a home position return completed deceleration to a creep speed.	The proximity dog turned off before the deceleration to a creep speed.	Review the dog position. Or review the parameter values of the home position return speed, creep speed, and travel distance after proximity dog.	
		(4)	Deceleration from the home position return speed/creep speed to the home position failed at the indexer method.	Check if the home position was turned on before the deceleration from the home position return speed/creep speed to the home position was complete.	It was not turned on before the deceleration was complete.	Review the positional relationship of the stroke limit and home position. Or review the parameter values of the home position return speed, creep speed, deceleration time constant, and home position shift distance.	
90.5	Z-phase unpassed	(1)	The Z-phase signal was not detected normally.	Check if the Z-phase signal of the servo motor/ linear servo motor was detected normally.	The Z-phase signal was not detected.	Review the Z-phase signal and wirings.	
					The Z-phase signal was detected.	Check (2).	
		(2)	A home position return was executed while the servo motor did not pass the Z-phase.	Check if the motor passed the Z-phase signal until the proximity dog turned off after the home position return started.	The Z-phase was not turned on.	Review the setting position of the home position return start and proximity dog.	

Alarm No.: 91	Name: Servo amplifier overheat warning						
Alarm content	· The temperature inside of the servo amplifier reached a warning level.						
Detail No.	Detail name	Cause		Check method	Check result	Action	Target
91.1	Main circuit device overheat warning	(1)	Ambient temperature of the servo amplifier has exceeded 55 ℃.	Check the ambient temperature.	It is over 55 ℃.	Lower the ambient temperature.	[A] [B] [WB] [RJ010] [GF]
					It is less than 55 ℃.	Check (2).	
		(2)	The close mounting is out of specifications.	Check the specifications of close mounting.	It is out of specifications.	Use within the range of specifications.	

Alarm No.: 92		Name: Battery cable disconnection warning					
Alarm content		Battery voltage for absolute position detection system decreased.					
Detail No.	Detail name	Cause		Check method	Check result	Action	Target
92.1	Encoder battery cable disconnection warning	(1)	1) When an MR-BAT6V1SET(-A) battery or MR-BT6VCASE battery case was used, the battery was not connected to CN4. 2) When an MR-BAT6V1BJ battery for junction battery cable was used, the battery was not connected to both CN4 and MR-BT6VCBL03M junction battery cable.	Check if the battery is connected correctly.	It is not connected.	Connect it correctly.	[A] [B] [WB] [RJ010] [GF]
					It is connected.	Check (2).	
		(2)	A battery cable was disconnected.	Check if the battery cable is malfunctioning.	It has a failure.	Replace or repair the cable.	
					It has no failure.	Check (3).	
		(3)	The battery voltage is low. The battery is consumed.	Check the battery voltage with a tester. When an MR-BAT6V1BJ battery for junction battery cable was used, check the voltage of the connector (orange) for servo amplifier.	It is less than 3.1 V DC.	Replace the battery.	
					It is 3.1 V DC or more.	Check (4).	
		(4)	An encoder cable was disconnected.	Check if the encoder cable is disconnected.	It is disconnected.	Replace or repair the cable.	
92.3	Battery degradation	(1)	The battery voltage is low. The battery is consumed.	Check the battery voltage with a tester.	It is less than 3.0 V DC.	Replace the battery.	
					It is 3.0 V DC or more.	Check (2).	
		(2)	The battery has deteriorated.	Replace the battery, and then check the repeatability.	It is not repeatable.	Replace the battery.	

Alarm No.: 93		Name: ABS data transfer warning					
Alarm content		ABS data were not transferred.					
Detail No.	Detail name	Cause		Check method	Check result	Action	Target
93.1	ABS data transfer requirement warning during magnetic pole detection	(1)	The Z-phase was not turned on at servo-on.	Check if the position within one-revolution is "0".	It is "0". (The Z-phase was not turned on.)	Turn on the Z-phase and disable the magnetic pole detection. Always make home position setting again.	[A]
					It is other than "0". (The Z-phase was turned on.)	Check (2).	
		(2)	The magnetic pole detection was executed.	Check if the ABS data is transferred during the magnetic pole detection.	The ABS data is transferred.	Disable the magnetic pole detection. After that, cycle SON (Servo-on) and transfer the ABS data.	

Alarm No.: 95		Name: STO warning					
Alarm content		· STO input signal turns off while the servo motor stops. · A diagnosis of input devices was not executed. · The safety observation function was enabled in the test mode.					
Detail No.	Detail name	Cause		Check method	Check result	Action	Target
95.1	STO1 off detection	(1)	STO1 is not inputted correctly.	Check if the STO1 of CN8 connector is wired correctly.	It is not wired correctly.	Wire it correctly. (When not using the STO function, attach the short-circuit connector came with the servo amplifier to CN8.)	[A] [B] [WB] [RJ010] [GF]
					It is wired correctly.	Check (2).	
		(2)	STO1 was turned off (enabled) under the following speed conditions. 1) Servo motor speed: 50 r/min or less 2) Linear servo motor speed: 50 mm/s or less 3) Direct drive motor speed: 5 r/min or less	Check if STO1 is off (enabled).	It is off (enabled).	Turn on STO1 (disabled).	
95.2	STO2 off detection	(1)	STO2 is not inputted correctly.	Check if the STO2 of CN8 connector is wired correctly.	It is not wired correctly.	Wire it correctly. (When not using the STO function, attach the short-circuit connector came with the servo amplifier to CN8.)	
					It is wired correctly.	Check (2).	
		(2)	STO2 was turned off (enabled) under the following speed conditions. 1) Servo motor speed: 50 r/min or less 2) Linear servo motor speed: 50 mm/s or less 3) Direct drive motor speed: 5 r/min or less	Check if STO2 is off (enabled).	It is off (enabled).	Turn on STO2.	
95.3	STO warning 1 (safety observation function)	(1)	"Input device - Fixing-diagnosis execution selection at start-up" was not executed.	Check if "Input device - Fixing-diagnosis execution selection at start-up" was executed.	It was not executed.	Execute it.	[A] [B] [GF]
					It was executed.	Check (2).	
		(2)	Set "Input device - Fixing-diagnosis execution selection at start-up" correctly using parameters.	Check if [Pr. PSD27] and [Pr. PSD28] are set correctly.	It is not set correctly.	Review the parameter.	
					It is set correctly.	Check (3).	
		(3)	The wiring is incorrect.	Check if the wiring has a failure.	It has a failure.	Review the wiring.	
					It has no failure.	Check (4).	
		(4)	The functional safety unit is malfunctioning.	Replace the functional safety unit, and then check the repeatability.	It is not repeatable.	Replace the functional safety unit.	
					It is repeatable.	Check (5).	
		(5)	Something near the device caused it.	Check the noise, ambient temperature, etc.	There is a problem in the surrounding.	Take countermeasures against its cause.	

Alarm No.: 95		Name: STO warning					
Alarm content		· STO input signal turns off while the servo motor stops. · A diagnosis of input devices was not executed. · The safety observation function was enabled in the test mode.					
Detail No.	Detail name	Cause		Check method	Check result	Action	Target
95.4	STO warning 2 (safety observation function)	(1)	The test operation mode was not set correctly.	Check if the servo amplifier and functional safety unit are set to the test operation mode.	It is not set.	Set it correctly.	[A] [B] [WB] [RJ010] [GF]
					It is set.	Check (2).	
		(2)	An error occurred in the safety communication. Or the network is disconnected.	Check the description "The display shows "Ab"." ☞ Page 126 Trouble which does not trigger alarm/warning	It is not repeatable.	Take countermeasures against its cause.	
					It is repeatable.	Check (3).	
		(3)	"Input mode selection" in [Pr. PSA02 Functional safety unit setting] is not set correctly.	Set [Pr. PSA02] correctly and check the repeatability.	It is not repeatable.	Review the parameter.	
					It is repeatable.	Check (4).	
		(4)	A functional safety unit which is not compatible with the safety communication is connected.	Check the software version of the functional safety unit.	It is A1 or earlier.	Replace the functional safety unit with a one with software version A2 or later.	[GF]
					It is A2 or later.	Check (5).	
		(5)	The setting of [Pr. PSC04 Safety communication - Network communication selection] is incorrect.	Correct the setting of [Pr. PSC04] and check the repeatability.	It is not repeatable.	Review the parameter setting.	[B] [GF]
					It is repeatable.	Check (6).	
		(6)	The servo amplifier is malfunctioning.	Replace the servo amplifier, and then check the repeatability.	It is not repeatable.	Replace the servo amplifier.	[A] [B] [WB] [RJ010] [GF]
					It is repeatable.	Check (7).	
		(7)	The functional safety unit is malfunctioning.	Replace the functional safety unit, and then check the repeatability.	It is not repeatable.	Replace the functional safety unit.	
					It is repeatable.	Check (8).	
		(8)	Something near the device caused it.	Check the noise, ambient temperature, etc.	There is a problem in the surrounding.	Take countermeasures against its cause.	
95.5	STO warning 3 (safety observation function)	(1)	STO command/SS1 command of the functional safety unit was turned off (enabled) under the following speed conditions. 1) Servo motor speed: 50 r/min or less 2) Linear servo motor speed: 50 mm/s or less 3) Direct drive motor speed: 5 r/min or less	Check if STO command/SS1 command of the functional safety unit is off (enabled).	It is off (enabled).	Turn on (disabled) STO command/SS1 command of the functional safety unit.	

Alarm No.: 96	Name: Home position setting warning						
Alarm content	· Home position setting could not be made.						
Detail No.	Detail name	Cause		Check method	Check result	Action	Target
96.1	In-position warning at home positioning	(1)	INP (In-position) did not turn on within the specified time during home positioning.	Check the droop pulses during home positioning.	It is in-position range or more.	Adjust gains to set droop pulses within the In-position range. Remove the cause of droop pulse occurrence, and make home position setting.	[A] [B] [WB] [RJ010] [GF]
96.2	Command input warning at home positioning	(1)	A command has already inputted at the time of home positioning.	Check if a command is inputted at home positioning.	A command is inputted.	Set it after home positioning.	
					A command is not inputted.	Check (2).	
		(2)	Creep speed is high.	Decrease the creep speed, and then check the repeatability.	It is not repeatable.	Decelerate the creep speed, and make home position setting.	
96.3	Servo off warning at home positioning	(1)	A home positioning was executed during servo-off.	Check if the status is servo-off at home positioning.	It is servo-off.	Turn to servo-on, and then execute the home positioning.	[A]
96.4	Home positioning warning during magnetic pole detection	(1)	Z-phase was not turned on after servo-on.	Check if the Z-phase was turned on.	The Z-phase was not turned on.	Rotate the direct drive motor to turn on the Z-phase, and make home position setting.	[A] [GF]

Alarm No.: 97	Name: Positioning specification warning						
Alarm content	· How to specify a positioning is incorrect for the positioning function.						
Detail No.	Detail name	Cause		Check method	Check result	Action	Target
97.1	Program operation disabled warning	(1)	When using the positioning function, start a program with the program operation disabled.	Check if the power of the servo amplifier was cycled after the program was changed.	The power of the servo amplifier was not cycled.	Cycle the power of the servo amplifier.	[A]
97.2	Next station position warning	(1)	An abnormal value was specified to a signal input of the next station position specification and automatic operation was started.	Check if a number of stations per rotation ([Pr. PT28]) or more value was not specified to the next station position.	The number of stations per rotation ([Pr. PT28]) or more value was specified.	Review the parameter setting or next station position input signal.	
					The number of stations per rotation ([Pr. PT28]) or more value was not specified.	Check (2).	
		(2)	The power of the servo amplifier was not cycled after the number of stations per rotation ([Pr. PT28]) was changed.	Check if the power of the servo amplifier was cycled after the number of stations per rotation ([Pr. PT28]) was changed.	The power was not cycled.	Cycle the power of the servo amplifier.	

Alarm No.: 98		Name: Software limit warning					
Alarm content		· A software limit set with the parameter was reached for the positioning function.					
Detail No.	Detail name	Cause		Check method	Check result	Action	Target
98.1	Forward rotation-side software stroke limit reached	(1)	A software limit was set within the actual operation range.	Check if the parameter settings ([Pr. PT15] to [Pr. PT18]) to the operation range are correct.	The setting was out of operation range.	Set [Pr. PT15] to [Pr. PT18] correctly.	[A] [GF]
					The setting was within operation range.	Check (2).	
		(2)	A point table of the position data which exceeds the software limit was executed.	Check if the target position of the point data to the operation range was correct.	The setting was out of operation range.	Set the point table correctly.	
					The setting was within operation range.	Check (3).	
		(3)	A software limit was reached by using the JOG operation or manual pulse generator operation.	Check if the JOG operation or manual pulse generator operation was executed properly to the operation range.	It reached to the out of operation range.	Operate within the software limit. Adjust properly the parameters such as JOG speed and multiplication of the manual pulse as necessary.	
98.2	Reverse rotation-side software stroke limit reached	Check it with the check method for [AL. 98.1].					

Alarm No.: 99		Name: Stroke limit warning					
Alarm content		· The stroke limit signal is off.					
Detail No.	Detail name	Cause		Check method	Check result	Action	Target
99.1	Forward rotation stroke end off	(1)	The forward rotation stroke limit switch is connected to LSP.	Check if the limit switch is connected correctly.	It is not connected.	Connect it correctly.	[A] [GF]
					It is connected.	Check (2).	
		(2)	The forward rotation stroke end was exceeded during driving.	Check if the forward rotation stroke limit switch turned off.	It turned off.	Check operation pattern.	
99.2	Reverse rotation stroke end off	(1)	The reverse rotation stroke limit switch is connected to LSN.	Check if the limit switch is connected correctly.	It is not connected.	Connect it correctly.	
					It is connected.	Check (2).	
		(2)	The reverse rotation stroke end was exceeded during driving.	Check if the reverse rotation stroke limit switch turned off.	It turned off.	Check operation pattern.	
99.4	Upper stroke limit off	(1)	The upper stroke limit switch is not connected to FLS of the controller.	Check if the limit switch is connected correctly.	It is not connected.	Connect it correctly.	[GF]
					It is connected.	Check (2).	
		(2)	The upper stroke limit was exceeded during driving.	Check if the upper stroke limit switch turned off.	It turned off.	Check operation pattern.	
99.5	Lower stroke limit off	(1)	The lower stroke limit switch is not connected to RLS of the controller.	Check if the limit switch is connected correctly.	It is not connected.	Connect it correctly.	
					It is connected.	Check (2).	
		(2)	The lower stroke limit was exceeded during driving.	Check if the lower stroke limit switch turned off.	It turned off.	Check operation pattern.	

Alarm No.: 9A		Name: Optional unit input data error warning					
Alarm content		· The BCD input data setting is incorrect when MR-D01 extension IO unit is connected.					
Detail No.	Detail name	Cause		Check method	Check result	Action	Target
9A.1	Optional unit input data sign error	(1)	The MR-D01 extension IO unit is not connected.	Check if MR-D01 is connected correctly.	It is not connected.	Connect it correctly.	[A]
					It is connected.	Check (2).	
		(2)	Both of + and - signs are on or off.	Check the sign of the optional unit input data.	Both are on or both are off.	Turn on one of the signs only.	
					Only one of the signs is on.	Check (3).	
		(3)	The - sign is set at incremental value command.	Check the sign of the optional unit input data.	The - sign is set.	Set it to +.	
					The + sign is set.	Check (4).	
		(4)	The MR-D01 extension IO unit is malfunctioning.	Replace the MR-D01, and then check the repeatability.	It is not repeatable.	Replace the MR-D01.	
9A.2	Optional unit BCD input data error	(1)	Other than "0" to "9" is set in a digit.	Check the BCD input data.	A value out of range is set.	Set a value from "0" to "9".	

Alarm No.: 9B		Name: Error excessive warning					
Alarm content		· Droop pulses have exceeded the warning occurrence level.					
Detail No.	Detail name	Cause		Check method	Check result	Action	Target
9B.1	Excess droop pulse 1 warning	(1)	The servo motor power cable was disconnected.	Check the servo motor power cable.	It is disconnected.	Repair or replace the servo motor power cable.	[A] [B] [WB] [GF]
					It is not disconnected.	Check (2).	
		(2)	The connection of the servo motor is incorrect.	Check the wiring of U/V/W.	It is incorrect.	Connect it correctly.	
					It is correct.	Check (3).	
		(3)	The connection of the encoder cable is incorrect.	Check if the encoder cable is connected correctly.	It is incorrect.	Connect it correctly.	
					It is correct.	Check (4).	
		(4)	The torque limit has been enabled.	Check if the limiting torque is in progress.	The limiting torque is in progress.	Increase the torque limit value.	
					The limiting torque is not in progress.	Check (5).	
		(5)	A moving part collided against the machine.	Check if it collided.	It collided.	Check operation pattern.	
					It did not collide.	Check (6).	
		(6)	The torque is insufficient.	Check the peak load ratio.	The torque is saturated.	Reduce the load or review the operation pattern. Or use a larger capacity motor.	
					The torque is not saturated.	Check (7).	
		(7)	Power supply voltage dropped.	Check the bus voltage value.	The bus voltage is low.	Check the power supply voltage and power supply capacity.	
					The bus voltage is high.	Check (8).	
		(8)	Acceleration/ deceleration time constant is too short.	Set a longer deceleration time constant, and then check the repeatability.	It is not repeatable.	Increase the acceleration/deceleration time constant.	
					It is repeatable.	Check (9).	

Alarm No.: 9B		Name: Error excessive warning					
Alarm content		· Droop pulses have exceeded the warning occurrence level.					
Detail No.	Detail name	Cause		Check method	Check result	Action	Target
9B.1	Excess droop pulse 1 warning	(9)	The position loop gain is small.	Increase the position loop gain, and then check the repeatability.	It is not repeatable.	Increase the position loop gain ([Pr. PB08]).	[A] [B] [WB] [GF]
					It is repeatable.	Check (10).	
		(10)	Servo motor shaft was rotated by external force./The moving part of the linear servo motor was moved by external force.	Measure the actual position under the servo-lock status.	It is rotated by external force./It was moved by external force.	Review the machine.	
					It is not rotated by external force./It was not moved by external force.	Check (11).	
		(11)	An encoder is malfunctioning.	Replace the servo motor, and then check the repeatability.	It is not repeatable.	Replace the servo motor.	
9B.3	Excess droop pulse 2 warning	Check it with the check method for [AL. 9B.1].					
9B.4	Error excessive warning during 0 torque limit	(1)	The torque limit has been 0.	Check the torque limit value.	The torque limit has been 0.	Do not input a command while the torque limit value is 0.	[A] [B] [WB] [GF]

Alarm No.: 9C		Name: Converter warning					
Alarm content		· A warning occurred in the converter unit during the servo-on.					
Detail No.	Detail name	Cause		Check method	Check result	Action	Target
9C.1	Converter unit warning	(1)	A warning occurred in the converter unit during the servo-on.	Check the warning of the converter unit, and take the action following the remedies for warnings of the converter unit.			[A] [B]

Alarm No.: 9D		Name: CC-Link IE warning 1					
Alarm content		· The station No. switch setting was changed after power-on. · The station No. setting differs from that of master station.					
Detail No.	Detail name	Cause		Check method	Check result	Action	Target
9D.1	Station number switch change warning	(1)	The station No. switch setting was changed after power-on.	Check if the switch was changed.	It was changed.	Restore the setting. Do not change the station No. switch after power-on.	[RJ010]
					It was not changed.	Check (2).	
		(2)	The servo amplifier is malfunctioning.	Replace the servo amplifier, and then check the repeatability.	It is not repeatable.	Replace the servo amplifier.	

Alarm No.: 9D		Name: CC-Link IE warning 1					
Alarm content		· The station No. switch setting was changed after power-on. · The station No. setting differs from that of master station.					
Detail No.	Detail name	Cause		Check method	Check result	Action	Target
9D.2	Master station setting warning	(1)	When MR-D30 is used to perform safety communication, the servo amplifier and MR-D30 are not connected correctly.	Check the connection of the servo amplifier to MR-D30.	It is not connected.	Connect it correctly.	[GF]
					Safety communication is not performed. Or the servo amplifier is connected to MR-D30 correctly.	Check (2).	
		(2)	The settings of the station type or cyclic points on the master station side do not match those on the servo amplifier side.	Check the setting of the master station and the servo amplifier.	The setting is incorrect.	Review the setting on the master station side.	[RJ010] [GF]
9D.3	Overlapping station number warning	(1)	The same station No. as other station was set.	Check devices on the network if station Nos. are overlapped.	They are overlapped.	Review the settings of the station Nos.	
9D.4	Mismatched station number warning	(1)	The station No. controlled on master side differs from that set on slave side.	Check the station No. on master side and slave side if they are matched together.	They are not matched.	Review the settings of the station Nos.	

Alarm No.: 9E		Name: CC-Link IE warning 2					
Alarm content		· The receive data of the CC-Link IE communication is abnormal.					
Detail No.	Detail name	Cause		Check method	Check result	Action	Target
9E.1	CC-Link IE warning	(1)	MR-J4-_GF_(-RJ) servo amplifier set for CC-Link IE Field Network is connected to the network of CC-Link IE Field Network Basic.	Check the combination of the slide switches of the servo amplifier.	The combination of the slide switches (SW1-1/SW1-2) are set for CC-Link IE Field Network. SW1-1: OFF (down) SW1-2: OFF (down)	Set the combination of the slide switches (SW1-1/SW1-2) for CC-Link IE Field Network Basic. SW1-1: OFF (down) SW1-2: ON (up)	[GF]
		(2)	The transmission status of the CC-Link IE communication is abnormal.	Check the noise, ambient temperature, etc.	It has a failure.	Take countermeasures against its cause.	[RJ010] [GF]
					It has no failure.	Check (3).	
		(3)	The Ethernet cable was disconnected.	Check the Ethernet cable connection.	It is disconnected.	Turn off the control circuit power supply of the servo amplifier, and then connect the Ethernet cable.	
					It is connected.	Check (4).	
		(4)	The wiring of the Ethernet cable was incorrect.	Check if the wiring of Ethernet cable is correct.	The wiring is incorrect.	Wire it correctly.	
					The wiring is correct.	Check (5).	
		(5)	An Ethernet cable was disconnected.	Check if the Ethernet cable is malfunctioning.	It has a failure.	Replace the Ethernet cable.	
					It has no failure.	Check (6).	
		(6)	Communication with the master station is abnormal.	Check the setting of [Pr. Po02] and [Pr. Po03].	The setting value is incorrect.	Review the communication settings.	[RJ010]
					The setting value is correct.	Check (7).	
		(7)	The master station is malfunctioning.	Check if the master station is malfunctioning.	It has a failure.	Replace the master station.	[RJ010] [GF]

Alarm No.: 9F		Name: Battery warning					
Alarm content		· Battery voltage for absolute position detection system decreased.					
Detail No.	Detail name	Cause		Check method	Check result	Action	Target
9F.1	Low battery	(1)	The battery is not connected to CN4.	Check if the battery is connected correctly.	It is not connected.	Connect it correctly.	[A] [B] [WB] [RJ010] [GF]
					It is connected.	Check (2).	
		(2)	The battery voltage is low. The battery is consumed.	Check the battery voltage with a tester. When an MR-BAT6V1BJ battery for junction battery cable was used, check the voltage of the connector (orange) for servo amplifier.	It is less than 4.9 V DC.	Replace the battery.	
9F.2	Battery degradation warning	(1)	The absolute position storage unit has not connected.	Check if the absolute position storage unit is connected correctly.	It is not connected.	Connect it correctly.	[A] [B] [WB] [GF]

Alarm No.: E0		Name: Excessive regeneration warning					
Alarm content		· There is a possibility that regenerative power may exceed permissible regenerative power of built-in regenerative resistor or regenerative option.					
Detail No.	Detail name	Cause		Check method	Check result	Action	Target
E0.1	Excessive regeneration warning	(1)	The regenerative power exceeded 85% of the permissible regenerative power of the built-in regenerative resistor or regenerative option.	Check the effective load ratio.	It is 85% or more.	Reduce the frequency of positioning. Increase the deceleration time constant. Reduce the load. Use a regenerative option if it is not being used.	[A] [B] [WB] [RJ010] [GF]

Alarm No.: E1		Name: Overload warning 1					
Alarm content		[AL. 50 Overload 1] or [AL. 51 Overload 2] can occur.					
Detail No.	Detail name	Cause		Check method	Check result	Action	Target
E1.1	Thermal overload warning 1 during operation	(1)	The load was over 85% to the alarm level of [AL. 50.1 Thermal overload error 1 during operation].	Check it with the check method for [AL. 50.1].			[A] [B] [WB] [RJ010] [GF]
E1.2	Thermal overload warning 2 during operation	(1)	The load was over 85% to the alarm level of [AL. 50.2 Thermal overload error 2 during operation].	Check it with the check method for [AL. 50.2].			
E1.3	Thermal overload warning 3 during operation	(1)	The load was over 85% to the alarm level of [AL. 51.1 Thermal overload error 3 during operation].	Check it with the check method for [AL. 51.1].			
E1.4	Thermal overload warning 4 during operation	(1)	The load was over 85% to the alarm level of [AL. 50.3 Thermal overload error 4 during operation].	Check it with the check method for [AL. 50.3].			
E1.5	Thermal overload error 1 during a stop	(1)	The load was over 85% to the alarm level of [AL. 50.4 Thermal overload error 1 during a stop].	Check it with the check method for [AL. 50.4].			
E1.6	Thermal overload error 2 during a stop	(1)	The load was over 85% to the alarm level of [AL. 50.5 Thermal overload error 2 during a stop].	Check it with the check method for [AL. 50.5].			
E1.7	Thermal overload error 3 during a stop	(1)	The load was over 85% to the alarm level of [AL. 51.2 Thermal overload error 3 during operation].	Check it with the check method for [AL. 51.2].			
E1.8	Thermal overload error 4 during a stop	(1)	The load was over 85% to the alarm level of [AL. 50.6 Thermal overload error 4 during a stop].	Check it with the check method for [AL. 50.6].			

Alarm No.: E2		Name: Servo motor overheat warning					
Alarm content		[AL. 46.2 Abnormal temperature of servo motor 2] can occur.					
Detail No.	Detail name	Cause		Check method	Check result	Action	Target
E2.1	Servo motor temperature warning	(1)	The temperature of the linear servo motor or direct drive motor reached 85% of the occurrence level of [AL. 46.2 Abnormal temperature of servo motor 2].	Check it with the check method for [AL. 46.2].			[A] [B] [WB] [GF]

Alarm No.: E3	Name: Absolute position counter warning						
Alarm content	· The multi-revolution counter value of the absolute position encoder exceeded the maximum range. · Absolute position encoder pulses are faulty. · An update cycle is short for writing multi-revolution counter value of the absolute position encoder to EEP-ROM.						
Detail No.	Detail name	Cause		Check method	Check result	Action	Target
E3.1	Multi-revolution counter travel distance excess warning	(1)	The travel distance from the home position is 32768 rev or more in the absolute position system.	Check the value of the multi-revolution counter.	It is 32768 rev or more.	Review operation range. Execute the home position return again. After the power is surely cycled, perform home position return again.	[A] [GF]
E3.2	Absolute position counter warning	(1)	Something near the device caused it.	Check the noise, ambient temperature, etc.	There is a problem in the surrounding.	Take countermeasures against its cause. After the power is surely cycled, perform home position return again.	[A] [B] [WB] [RJ010] [GF]
					There is no problem in the surrounding.	Check (2).	
		(2)	An encoder is malfunctioning.	Replace the servo motor, and then check the repeatability.	It is not repeatable.	Replace the servo motor.	
E3.4	Absolute positioning counter EEP-ROM writing frequency warning	(1)	A home position was renewed (EEP-ROM write) twice or more in 10 minutes in the servo amplifier due to rotation to the same direction in short time in the point table method of the positioning mode, degree setting with the program method, or the indexer method.	Check if the operation was within the following conditions between the number of gear teeth on machine side ([Pr. PA06] CMX) and servo motor speed (N). • When CMX ≤ 2000, N < 3076.7 r/min • When CMX > 2000, N < 3276.7 - (CMX × 0.1) r/min • When (CMX/CDV) is reduced to its lowest terms, CMX ≤ 15900	The operation was out of conditions.	Set the command speed within the conditions. Set the number of gear teeth on machine side within the conditions. After the power is surely cycled, perform home position return again.	[A] [GF]
E3.5	Encoder absolute positioning counter warning	Check it with the check method for [AL. E3.2].					

Alarm No.: E4	Name: Parameter warning						
Alarm content	· Out of the setting range was attempted to write during parameter writing.						
Detail No.	Detail name	Cause		Check method	Check result	Action	Target
E4.1	Parameter setting range error warning	(1)	A parameter was set to out of range with the servo system controller.	Check the parameter setting value set with the servo system controller.	It is out of setting range.	Set it within the range.	[B] [WB] [RJ010]

Alarm No.: E5	Name: ABS time-out warning						
Alarm content	· A response from the programmable controller was over 5 s at the absolute position erased data transfer. · ABSM (ABS transfer mode) turned off during the absolute position erased data transfer. · SON (Servo-on), RES (Reset), or EM2/EM1 (Forced stop) turned off during the absolute position erased data transfer.						
Detail No.	Detail name	Cause		Check method	Check result	Action	Target
E5.1	Time-out during ABS data transfer	(1)	The wiring of I/O signals is incorrect.	Check if the I/O signal wire is disconnected or connected loosely.	It has a failure.	Repair or replace the I/O signal wire.	[A]
					It has no failure.	Check (2).	
		(2)	The sequence program is incorrect.	Check the sequence program.	The sequence program is incorrect.	Modify the sequence program.	
E5.2	ABSM off during ABS data transfer	Check it with the check method for [AL. E5.1].					
E5.3	SON off during ABS data transfer						

Alarm No.: E6	Name: Servo forced stop warning						
Alarm content	· EM2/EM1 (Forced stop) turned off. · SS1 command was inputted.						
Detail No.	Detail name	Cause		Check method	Check result	Action	Target
E6.1	Forced stop warning	(1)	EM2/EM1 (Forced stop) turned off.	Check the status of EM2/EM1.	It is off.	Ensure safety and turn on EM2/EM1 (Forced stop).	[A] [B] [WB] [RJ010] [GF]
					It is on.	Check (2).	
		(2)	The external 24 V DC power supply is off.	Check if the external 24 V DC power supply is inputted.	It is not inputted.	Input the 24 V DC power supply.	
					It is inputted.	Check (3).	
		(3)	The servo amplifier is malfunctioning.	Replace the servo amplifier, and then check the repeatability.	It is not repeatable.	Replace the servo amplifier.	
E6.2	SS1 forced stop warning 1 (safety observation function)	(1)	The SS1 command is off (enabled).	Check if the SS1 command is off (enabled).	The SS1 command is off (enabled).	Turn on the SS1 input (disabled).	[A] [B] [GF]
		(2)	An external 24 V DC is not inputted to the functional safety unit.	Check if an external 24 V DC is inputted to the functional safety unit.	It is not inputted.	Input the 24 V DC power supply.	
					It is inputted.	Check (3).	
		(3)	The functional safety unit is malfunctioning.	Replace the functional safety unit, and then check the repeatability.	It is not repeatable.	Replace the functional safety unit.	
E6.3	SS1 forced stop warning 2 (safety observation function)	(1)	An error occurred in the safety communication.	Check the description "The display shows "Ab".". ☞ Page 126 Trouble which does not trigger alarm/warning	It is not repeatable.	Take countermeasures against its cause.	

Alarm No.: E7		Name: Controller forced stop warning					
Alarm content		· The forced stop signal of the servo system controller was enabled.					
Detail No.	Detail name	Cause		Check method	Check result	Action	Target
E7.1	Controller forced stop input warning	(1)	The forced stop signal of the servo system controller was inputted.	Check if the servo system controller is a forced stop status.	It is the forced stop status.	Ensure safety and cancel the forced stop signal of the controller.	[B] [WB] [RJ010]
		(2)	The forced stop signal of the controller was inputted with Modbus RTU communication.	Check if the controller is in a forced stop status.	It is the forced stop status.	Ensure safety and cancel the forced stop signal of the controller.	[A]

Alarm No.: E8		Name: Cooling fan speed reduction warning					
Alarm content		· The cooling fan speed decreased to the warning occurrence level or less.					
Detail No.	Detail name	Cause		Check method	Check result	Action	Target
E8.1	Decreased cooling fan speed warning	(1)	Foreign matter was caught in the cooling fan.	Check if a foreign matter is caught in the cooling fan.	Something has been caught.	Remove the foreign matter.	[A] [B] [WB] [RJ010] [GF]
					Nothing has been caught.	Check (2).	
		(2)	Cooling fan life expired.	Check the total of power on time of the servo amplifier.	It exceed the cooling fan life.	Replace the servo amplifier.	
E8.2	Cooling fan stop	Check it with the check method for [AL. E8.1].					

Alarm No.: E9		Name: Main circuit off warning					
Alarm content		· The servo-on command was inputted with main circuit power supply off. · The bus voltage dropped during the servo motor driving under 50 r/min.					
Detail No.	Detail name	Cause		Check method	Check result	Action	Target
E9.1	Servo-on signal on during main circuit off	(1)	The main circuit power supply is off. For the drive unit, the power supply of the converter unit is off.	Check if the main circuit power supply is inputted. Check if the power supply of the converter unit is inputted.	It is not inputted.	Turn on the main circuit power.	[A] [B] [WB] [RJ010] [GF]
					It is inputted.	Check (2).	
		(2)	The wiring between P3 and P4 was disconnected. For the drive unit, the wiring between P1 and P2 of the converter unit was disconnected.	Check the wiring between P3 and P4. Check the wiring between P1 and P2 of the converter unit.	It is disconnected.	Connect it correctly.	
					It is connected.	Check (3).	
		(3)	The main circuit power supply wiring was disconnected. For the drive unit, the main circuit power supply wiring of the converter unit was disconnected.	Check the main circuit power supply wiring. Check the main circuit power supply wiring of the converter unit.	It is disconnected.	Connect it correctly.	
					It has no failure.	Check (4).	
		(4)	For the drive unit, the magnetic contactor control connector of the converter unit was disconnected.	Check the magnetic contactor control connector of the converter unit.	It is disconnected.	Connect it correctly.	
					It has no failure.	Check (5).	
		(5)	For the drive unit, the bus bar between the converter unit and drive unit was disconnected.	Check the bus bar between the converter unit and drive unit.	It is disconnected.	Connect it correctly.	
					It has no failure.	Check (6).	

Alarm No.: E9	Name: Main circuit off warning						
Alarm content	· The servo-on command was inputted with main circuit power supply off. · The bus voltage dropped during the servo motor driving under 50 r/min.						
Detail No.	Detail name	Cause		Check method	Check result	Action	Target
E9.1	Servo-on signal on during main circuit off	(6)	The setting value of [Pr. PA02 Magnetic contactor drive output selection] contradicts the wiring constitution.	Check the [Pr. PA02] setting and the wiring constitution.	The setting or wiring is incorrect.	Review the setting of [Pr. PA02].	[A] [B] [WB] [RJ010] [GF]
					The setting and wiring are correct.	Check (7).	
		(7)	For the MR-J4-03A6(-RJ) or MR-J4W2-0303B6 servo amplifier, 24 V DC input is not selected even though 24 V DC input is used.	Check the parameter setting. MR-J4-03A6(-RJ): [Pr. PC27] MR-J4W2-0303B6: [Pr. PC05]	The setting is incorrect.	Set it correctly.	
					The setting is correct.	Check (8).	
		(8)	The bus voltage is low.	Check if the bus voltage is lower than the prescribed value. 200 V class: 215 V DC 400 V class: 430 V DC 100 V class: 215 V DC 48 V DC setting: 38 V DC 24 V DC setting: 18 V DC	The voltage is lower than the prescribed value.	Review the wiring. Check the power supply capacity.	
					The voltage is equal to or higher than the prescribed value.	Check (9).	
		(9)	The servo amplifier is malfunctioning.	Replace the servo amplifier, and then check the repeatability.	It is not repeatable.	(10) Replace the servo amplifier.	
		(10)	For the drive unit, the converter unit is malfunctioning.	Replace the converter unit, and then check the repeatability.	It is not repeatable.	Replace the converter unit.	
E9.2	Bus voltage drop during low speed operation	(1)	The bus voltage dropped during the servo motor driving under 50 r/min.	Check the bus voltage.	It is lower than the prescribed value. 200 V class: 200 V DC 400 V class: 430 V DC 100 V class: 200 V DC 48 V DC setting: 35 V DC 24 V DC setting: 15 V DC	Review the power supply capacity. Increase the acceleration time constant.	
E9.3	Ready-on signal on during main circuit off	Check it with the check method for [AL. E9.1].					
E9.4	Converter unit forced stop	(1)	The forced stop of the converter unit is enabled during the servo-on command.	Check if the forced stop of the converter unit is enabled.	It is enabled.	Deactivate the forced stop of the converter unit.	[A] [B]
					It is not enabled.	Check (2).	
		(2)	The protection coordination cable is not correctly connected.	Check the protection coordination cable.	It is not connected.	Connect the protection coordination cable correctly.	

Alarm No.: EA	Name: ABS servo-on warning						
Alarm content	· The servo-on was not enabled within 1 s after ABSM (ABS transfer mode) was turned on.						
Detail No.	Detail name	Cause		Check method	Check result	Action	Target
EA.1	ABS servo-on warning	(1)	The wiring of I/O signals is incorrect.	Check if the I/O signal wire is disconnected or connected loosely.	It has a failure.	Repair or replace the I/O signal wire.	[A]
					It has no failure.	Check (2).	
		(2)	The sequence program is incorrect.	Check the sequence program.	The sequence program is incorrect.	Modify the sequence program.	

Alarm No.: EB		Name: The other axis error warning					
Alarm content		· An alarm, which stops all axes, such as [AL. 24 Main circuit error] or [AL. 32 Overcurrent] occurred in other axis. · "All alarms" of "Target alarm selection of the other axis error warning" is selected in [Pr. PF02].					
Detail No.	Detail name	Cause		Check method	Check result	Action	Target
EB.1	The other axis error warning	(1)	[AL. 24] occurred at other axis.	Check if [AL. 24] is occurring at other axis.	It is occurring.	Eliminate the cause of [AL. 24] on the other axis side.	[WB]
					It did not occur.	Check (2).	
		(2)	[AL. 32] occurred at other axis.	Check if [AL. 32] is occurring at other axis.	It is occurring.	Eliminate the cause of [AL. 32] on the other axis side.	
					It did not occur.	Check (3).	
		(3)	"All alarms" of "Target alarm selection of the other axis error warning" is selected in [Pr. PF02].	Check the [Pr. PF02] setting.	"All alarms" is selected.	Remove the cause of the occurring alarm at other axis.	

Alarm No.: EC		Name: Overload warning 2					
Alarm content		· Operations over rated output were repeated while the servo motor shaft was not rotated.					
Detail No.	Detail name	Cause		Check method	Check result	Action	Target
EC.1	Overload warning 2	(1)	The load is too large or the capacity is not enough.	Check the effective load ratio.	The effective load ratio is high.	Reduce the load. Replace the servo motor with the one of larger capacity.	[A] [B] [WB] [RJ010] [GF]

Alarm No.: ED		Name: Output watt excess warning					
Alarm content		· The status, in which the output wattage (speed × torque) of the servo motor exceeded the rated output, continued steadily.					
Detail No.	Detail name	Cause		Check method	Check result	Action	Target
ED.1	Output watt excess warning	(1)	The status, in which the output wattage (speed × torque or thrust) of the servo motor exceeded 120% of the rated output (continuous thrust), continued steadily.	Check the servo motor speed and torque, or check the motor speed and thrust.	The output wattage is 120% of rating.	Reduce the servo motor speed. Reduce the load.	[A] [B] [WB] [RJ010] [GF]

Alarm No.: F0		Name: Tough drive warning					
Alarm content		· Tough drive function was activated.					
Detail No.	Detail name	Cause		Check method	Check result	Action	Target
F0.1	Instantaneous power failure tough drive warning	(1)	The voltage of the control circuit power supply has dropped.	Check it with the check method for [AL. 10.1].			[A] [B] [WB] [RJ010] [GF]
F0.3	Vibration tough drive warning	(1)	The setting value of the machine resonance suppression filter was changed due to a machine resonance.	Check if it was changed frequently.	It was changed frequently.	Set the machine resonance suppression filter. Check the machine status if screws are loose or the like.	

Alarm No.: F2	Name: Drive recorder - Miswriting warning						
Alarm content	A waveform measured by the drive recorder function was not recorded.						
Detail No.	Detail name	Cause		Check method	Check result	Action	Target
F2.1	Drive recorder - Area writing time-out warning	(1)	The Flash-ROM is malfunctioning.	Disconnect the cables except for the control circuit power supply, and then check the repeatability.	It is repeatable.	Replace the servo amplifier.	[A] [B] [WB] [RJ010] [GF]
F2.2	Drive recorder - Data miswriting warning	(1)	Data were not written to the drive recorder area.	Check if clearing alarm history disables this alarm with MR Configurator2.	It is not canceled.	Replace the servo amplifier.	

Alarm No.: F3	Name: Oscillation detection warning					
Alarm content	[AL. 54 Oscillation detection] can occur.					
Detail No.	Detail name	Cause	Check method	Check result	Action	Target
F3.1	Oscillation detection warning	Check it with the check method for [AL. 54.1].				

Alarm No.: F4	Name: Positioning warning						
Alarm content	Target position or acceleration time constant/deceleration time constant was set out of setting range.						
Detail No.	Detail name	Cause		Check method	Check result	Action	Target
F4.4	Target position setting range error warning	(1)	A target position was set out of setting range.	Check the setting value of the target position.	It is out of setting range.	Set the target position correctly, and cancel the warning (turn on C_ORST).	[Others]
F4.6	Acceleration time constant setting range error warning	(1)	The acceleration time constant or the deceleration time constant was set out of setting range.	Check the setting value of the acceleration time constant ([Pr. PT49]) and the deceleration time constant ([Pr. PT50]).	It is out of setting range.	Set the acceleration time constant and the deceleration time constant correctly, and cancel the warning (turn on ORST).	[GF]
F4.7	Deceleration time constant setting range error warning	(1)	Check it with the check method for [AL. F4.6].				
F4.9	Home position return type error warning	(1)	A home position return type was set out of setting range.	Check the setting value ([Pr. PT45]) of the home position return type.	It is not corresponding to a value for the home position return type.	Set the home position return type correctly, and cancel the warning (turn on ORST).	[GF]

Alarm No.: F5		Name: Simple cam function - Cam data miswriting warning					
Alarm content		The cam data written by MR Configurator2 is not written to a Flash-ROM.					
Detail No.	Detail name	Cause		Check method	Check result	Action	Target
F5.1	Cam data - Area writing time-out warning	(1)	The Flash-ROM is malfunctioning.	Disconnect the cables except for the control circuit power supply, and then check the repeatability.	It is repeatable.	Replace the servo amplifier.	[A] [GF]
F5.2	Cam data - Miswriting warning	(1)	The cam data was not written.	After the power is cycled, perform writing, and check the repeatability again. When the cam data is initialized, perform writing, and check the repeatability again. • Section 7.2.9 [Pr. PT34] of "MR-J4-_A_-RJ Servo Amplifier Instruction Manual (Positioning Mode)" [□]MR-J4-_GF_(-RJ) Servo Amplifier Instruction Manual (I/O Mode) • Section 7.2.4 [Pr. PT34] of "MR-J4-_GF_(-RJ) SERVO AMPLIFIER INSTRUCTION MANUAL (CC-Link IE Field Network Basic)"	It is repeatable.	Replace the servo amplifier.	
F5.3	Cam data checksum error	(1)	When the power is switched on after the cam data is written, a checksum of the cam data does not match. (Error occurred in cam data.)	Check if an error occurred (such as entered noise, power-off) at cam data write.	It has a failure.	After writing the cam data again, cycle the power.	
					It has no failure.	Check (2).	
		(2)	When the cam control command is turned on after the temporal writing of cam data, a checksum of the cam data does not match. (Error occurred in cam data.)	Check if an error occurred (such as entered noise) at temporal writing of cam data.	It has a failure.	After performing the temporal writing of cam data again, turn on the cam control command.	
					It has no failure.	Check (3).	
		(3)	The Flash-ROM is malfunctioning.	Replace the servo amplifier, and then check the repeatability.	It is not repeatable.	Replace the servo amplifier.	

Alarm No.: F6	Name: Simple cam function - Cam control warning						
Alarm content	· The cam axis position restoration at a time of cam control start was a failure. · The cam control is not normal.						
Detail No.	Detail name	Cause		Check method	Check result	Action	Target
F6.1	Cam axis one cycle current value restoration failed	(1)	The cam axis one cycle current value corresponding to the feed current value at cam control start cannot be restored. (It occurs in a reciprocating motion pattern of the cam.)	Check if the feed current value is within the stroke in a reciprocating motion pattern of the cam.	The feed current value is the outside of the stroke.	Move the feed current value to within the stroke in a reciprocating motion pattern of the cam. Or set the cam standard position within the stroke in a reciprocating motion pattern of the cam.	[A] [GF] -
F6.2	Cam axis feed current value restoration failed	(1)	The difference (command unit) between the restored cam axis feed current value and the command position at cam control start is bigger than "in-position range".	Check if the difference (command unit) between the restored cam axis feed current value and the command position at cam control start is in the "in-position range".	The difference of the command position (command unit) is not within "in-position range".	Calculate the cam axis feed current value to be restored, move the command position to the position, and then start the cam control. (For the calculation method, refer to the following. • Section 12.1.7 (2) of "MR-J4-_A_-RJ Servo Amplifier Instruction Manual (Positioning Mode)" [□]MR-J4-_GF_(-RJ) Servo Amplifier Instruction Manual (I/O Mode)) • Section 9.5.7 (2) of "MR-J4-_GF_(-RJ) SERVO AMPLIFIER INSTRUCTION MANUAL (CC-Link IE Field Network Basic)" Or set a larger setting value to "in-position range" when the setting value is extremely small, such as 0.	
F6.3	Cam unregistered error	(1)	Cam data has never been written.	Check if the cam data was written.	It was not written.	Write the cam data.	
					It was written.	Check (2).	
		(2)	The cam data of the specified cam No. was not written.	Check if the cam data of the specified cam No. was written.	It was not written.	Write the cam data of the specified cam No.	
					It was written.	Check (3).	
		(3)	Cam data has changed due to a servo amplifier malfunction.	Replace the servo amplifier, and then check the repeatability.	It is not repeatable.	Replace the servo amplifier.	
F6.4	Cam control data setting range error	(1)	An out of range value is set to the cam control data.	Check the setting of the cam control data.	The setting is incorrect.	Set it correctly.	
F6.5	Cam No. external error	(1)	An out of range value is set to the cam No.	Check the setting of the cam No.	The setting is incorrect.	Set it correctly.	

Alarm No.: F6		Name: Simple cam function - Cam control warning					
Alarm content		· The cam axis position restoration at a time of cam control start was a failure. · The cam control is not normal.					
Detail No.	Detail name	Cause		Check method	Check result	Action	Target
F6.6	Cam control inactive	(1)	After cam data was written, the cam control command was turned on without cycling the power.	Check if the power was cycled after the cam data was written.	The power was not cycled.	Cycle the power.	[A] [GF]
					The power was cycled.	Check (2).	
		(2)	After the cam control command was turned on, the servo-on was turned on.	Check if the cam control command was turned on during servo-on.	The cam control command was not turned on during servo-on.	Turn on the cam control command during servo-on.	
					The cam control command was turned on during servo-on.	Check (3).	
		(3)	The cam control command was turned on during servo motor driving, and the servo motor stopped.	Check if the cam control command was turned on while the travel completion was on.	The cam control command was not turned on while the travel completion was on.	Turn on the cam control command while the travel completion was on.	
					The cam control command was turned on while the travel completion was on.	Check (4).	
		(4)	The cam control command was turned on at the time of incompletion of home position return.	Check if the home position return completion is on.	The home position return completion is off.	Make a home position return, and turn on the cam control command.	
					The home position return completion is on.	Check (5).	
		(5)	It became servo-off during cam control.	Check if it is servo-off.	It is servo-off.	After servo-on, turn on the cam control command again.	
					It is servo-on.	Check (6).	
		(6)	A home position is erased during cam control.	Check if the home position return completion is off.	The home position return completion is off.	After the home position return completion, turn on the cam control command again.	
					The home position return completion is on.	Check (7).	
		(7)	It is stopped at a software limit during cam control.	Check if a software limit is reached.	A software limit is reached.	After it is retracted from the position of a software limit, turn on the cam control command again.	
					A software limit is not reached.	Check (8).	
		(8)	It is stopped at a stroke limit during cam control.	Check if a stroke limit is reached.	A stroke limit is reached.	After it is retracted from the position of a stroke limit, turn on the cam control command again.	

Alarm No.: F7		Name: Machine diagnosis warning					
Alarm content		There is a possibility that the equipment connected with the servo motor is malfunctioning.					
Detail No.	Detail name	Cause		Check method	Check result	Action	Target
F7.1	Vibration failure prediction warning	(1)	The servo system is unstable and oscillating.	Check if the gain is changed after the vibration failure prediction function is enabled.	The gain was changed.	Adjust the servo gain with the auto tuning. Set the machine resonance suppression filter.	[GF]
					The gain was not changed.	Check (2).	
		(2)	The vibration during servo motor operation increased because of deterioration of equipment parts.	Check that the vibration level during servo motor operation increased from that during the initial operation.	The vibration level during servo motor operation increased by 5% or lower from that during the initial operation.	Set a larger threshold multiplication for vibration failure prediction ([Pr. PF40] "_ _ x _") and restart the equipment.	
					The vibration level during servo motor operation increased by 5% or higher from that during the initial operation.	Check and maintain the equipment and replace parts as necessary.	
F7.2	Friction failure prediction warning	(1)	Changes in environment affected equipment friction.	Check that environment conditions such as ambient temperature has been changed from that of the initial operation.	The usage environment has been changed.	Reset the threshold to set a new one.	
					The usage environment is not changed.	Check (2).	
		(2)	Deterioration of equipment parts affected equipment friction.	Check that the friction torque at rated speed has been changed from that of the initial operation.	The friction torque at rated speed is not changed from that of the initial operation.	Set a larger threshold multiplication for friction failure prediction ([Pr. PF40] "_ _ _ x") and restart the equipment.	
					The friction torque at rated speed has been changed from that of the initial operation.	Check and maintain the equipment and replace parts as necessary.	
F7.3	Total travel distance failure prediction warning	(1)	The servo motor total travel distance exceeds the threshold.	Check if the threshold is set correctly.	The threshold is not set correctly.	Set the parameters so that the value of "[Pr. PF34] × [Pr. PF41]" is approximately the same as the rated life and restart the equipment.	
					The threshold is set correctly.	Check the equipment. After replacing the equipment, reset the servo motor total travel distance.	

1.6 Trouble which does not trigger alarm/warning

Point

When the servo amplifier, servo motor, or encoder malfunctions, the following status may occur.

The following example shows causes which do not trigger alarm or warning. Remove each cause referring to this section.

Description	Cause	Checkpoint	Action	Target
The display shows "AA".	The power of the servo system controller was turned off.	Check the power of the servo system controller.	Switch on the power of the servo system controller.	[B] [WB]
	A SSCNET Ⅲ cable was disconnected.	Check if "AA" is displayed in the corresponding axis and following axes.	Replace the SSCNET Ⅲ cable of the corresponding axis.	
		Check if the connectors (CN1A, CN1B) are unplugged.	Connect it correctly.	
	The control circuit power of the previous axis servo amplifier was turned off.	Check if "AA" is displayed in the corresponding axis and following axes.	Check the power of the servo amplifier.	
	The amplifier-less operation function of servo system controller is enabled.	Check if the amplifier-less operation function of servo system controller is enabled.	Disable the amplifier-less operation function.	
	An Ethernet cable was disconnected.	Check if "AA" is displayed in the corresponding axis and following axes.	Replace the Ethernet cable of the corresponding axis.	[RJ010] [GF]
		Check if the connectors (CN10A/CN10B or CN1A/CN1B) are unplugged.	Connect it correctly.	
The display shows "Ab".	A controller, which is not compatible with the servo amplifier, has been connected.	Check if a controller, which is not compatible with the servo amplifier, is connected.	Connect a compatible controller.	[B] [WB]
	The axis is disabled.	Check if the disabling control axis switch is on. [B]: SW2-2 [WB]: SW2-2 to 2-4	Turn off the disabling control axis switch.	
	The setting of the axis No. is incorrect.	Check that the other servo amplifier is not assigned to the same axis No.	Set it correctly.	
	Axis No. does not match with the axis No. set to the servo system controller.	Check the setting and axis No. of the servo system controller.	Set it correctly.	
	Information about the servo series has not set in the simple motion module.	Check the value set in Servo series (Pr.100) in the simple motion module.	Set it correctly.	
	Communication cycle does not match.	Check the communication cycle at the servo system controller side. When using 8 axes or less: 0.222 ms When using 16 axes or less: 0.444 ms When using 32 axes or less: 0.888 ms	Set it correctly.	

Description	Cause	Checkpoint	Action	Target
The display shows "Ab".	Connection to MR-J4W3-_B with software version A2 or earlier was attempted in 0.222 ms communication cycle.	Check if the communication cycle on servo system controller side is 0.222 ms.	Use them with 0.444 ms or more communication cycle.	[WB]
	MR-J4W3-_B was attempted to use in fully closed loop system.	Check if it was attempted to use in fully closed loop system.	MR-J4W3-_B does not support the fully closed loop control system. Use MR-J4-_B_ or MR-J4W2-_B.	
	A SSCNET Ⅲ cable was disconnected.	Check if "Ab" is displayed in the corresponding axis and following axes.	Replace the SSCNET Ⅲ cable of the corresponding axis.	[B] [WB]
		Check if the connectors (CN1A, CN1B) are unplugged.	Connect it correctly.	
	The control circuit power supply of the previous axis servo amplifier is off.	Check if "Ab" is displayed in the corresponding axis and following axes.	Check the power of the servo amplifier.	
	The amplifier-less operation function of servo system controller is enabled.	Check if the amplifier-less operation function of servo system controller is enabled.	Disable the amplifier-less operation function.	
	The servo amplifier is malfunctioning.	Check if "Ab" is displayed in the corresponding axis and following axes.	Replace the servo amplifier of the corresponding axis.	
	An Ethernet cable was disconnected.	Check if "Ab" is displayed in the corresponding axis and following axes.	Replace the Ethernet cable of the corresponding axis.	[RJ010] [GF]
	The servo amplifier power was switched on when the master station was off.	Check the power of the master station.	Turn on the power of the master station.	
	Communication cycle does not match.	Check the communication cycle on the master station side. When using 8 axes or less: 0.888 ms When using 16 axes or less: 1.777 ms	Set it correctly.	[RJ010]
		Check the communication cycle by referring to the controller instruction manual.	Refer to the controller instruction manual.	[GF]
	MR-J3-T10 is malfunctioning.	Replace the MR-J3-T10, and then check the repeatability.	Replace the MR-J3-T10.	[RJ010]
	The servo amplifier is malfunctioning.	Replace the servo amplifier, and then check the repeatability.	Replace the servo amplifier.	[RJ010] [GF]
	The master station is malfunctioning.	Replace the master station, and then check the repeatability.	Replace the master station.	
The display shows "b##".[7]	Test operation mode has been enabled.	Test operation setting switch is turned on.	Turn off the test operation setting switch.	[B] [WB] [RJ010] [GF]
	The system has been in the ready-off state.	Check if the servo ready state is off with the servo system controller.	Turn on the servo-on signals for all axes.	
The display shows "dEF".	Initializing point table/program is in progress.	Initializing of point table/ program was set in the parameter ([Pr. PT34] = 5001) and the power was cycled.	It takes about 20 s for startup the servo amplifier at initializing. Please wait until the display changes.	[A]
The display shows "off".	Operation mode for manufacturer setting is enabled.	Check if all of the control axis setting switches (SW2) are on.	Set the control axis setting switches (SW2) correctly.	[B] [WB] [RJ010] [GF]

Description	Cause	Checkpoint	Action	Target
The display turned off.	The external I/O terminal was shorted.	When the display is on by disconnecting the following connectors, check if the disconnected cable wire is shorted. [A]: CN1, CN2, CN3 [B] [WB] [RJ010] [GF]: CN2, CN3	Review the wiring of I/O signals.	[A] [B] [WB] [RJ010] [GF]
	The control circuit power supply is not applied.	Check if the control circuit power supply of the servo amplifier is off.	Turn on the control circuit power.	
	The voltage of the control circuit power supply has dropped.	Check if the voltage of the control circuit power supply dropped.	Increase the voltage of the control circuit power supply.	
The servo motor does not operate.	The connection of the servo motor is incorrect.	Check the wiring of U/V/W.	Connect it correctly.	[A] [B] [WB] [RJ010] [GF]
	The servo motor power supply cable was connected to a servo amplifier of other axis.	Check if the encoder cable and servo motor power supply cable are connected to the same servo amplifier.	Connect the encoder cable and servo motor power supply cable correctly.	
	An alarm or warning is occurring.	Check if an alarm or warning is occurring.	Check the content of the alarm/warning and remove its cause.	
	The system has been in the test operation mode.	[A]: Check if the lower right point is blinking. [B] [WB] [RJ010] [GF]: Check if the test operation setting switch is on (up).	Cancel the test operation mode.	
	The motor-less operation has been enabled.	[A]: Check the [Pr. PC60] setting. [B] [WB] [RJ010] [GF]: Check the [Pr. PC05] setting.	Disable the motor-less operation.	
	The torque is insufficient due to large load.	Check instantaneous torque using status display (only [A]) or MR Configurator2 if the load exceeds the maximum torque or torque limit value.	Reduce the load or use a larger capacity servo motor.	
	An unintended torque limit has been enabled.	Check if the torque limit is enabled.	Cancel the torque limit.	
	The setting of the torque limit is incorrect.	Check if the torque limit is "0". [A]: [Pr. PA11] and [Pr. PA12], or analog input [B] [WB] [RJ010]: Setting on controller side [GF]: [Pr. PA11], [Pr. PA12], or setting on controller side	Set it correctly.	
	Machine is interfering with the motor.	Check if machine is interfering.	Remove the interference.	
	For a servo motor with an electromagnetic brake, the brake has not released.	Check the power supply of the electromagnetic brake.	Turn on the electromagnetic brake power.	
	LSP (Forward rotation stroke end) and LSN (Reverse rotation stroke end) are not on.	Check if [AL. 99] is occurring.	Turn on LSP and LSN.	[A] [GF]
	SON (Servo-on) is not on.	Check the SON (Servo-on) state.	Turn on SON (Servo-on).	
	RES (Reset) is on.	Check the RES (Reset) state.	Turn off RES (Reset).	[A]
	The setting of the control mode is incorrect.	Check the [Pr. PA01] setting.	Set it correctly.	

Description	Cause	Checkpoint	Action	Target
The servo motor does not operate.	The command pulse is not inputted in the position control mode.	Check if the pulse train is outputted on the controller side.	Review the setting on the controller side.	[A]
	The wiring of the command pulse train signal is incorrect in the position control mode.	Check the cumulative command pulses using the status display or MR Configurator2. Input the pulse train command and check if the display changes.	Review the wiring. When the signal is used in open-collector type, input 24 V DC to OPC.	
	The setting of the command pulse input form is incorrect in the position control mode.	Check that the pulse train form outputted with the controller and the setting of [Pr. PA13] are matched.	Review the [Pr. PA13] setting.	
	Both of ST1 (Forward rotation start) and ST2 (Reverse rotation start) are on or off in the speed control mode or the positioning mode.	Check the status of ST1 (Forward rotation start) and ST2 (Reverse rotation start).	Turn on ST1 (Forward rotation start) or ST2 (Reverse rotation start).	
	Both of RS1 (Forward rotation selection) and RS2 (Reverse rotation selection) are on or off in the torque control mode.	Check the status of RS1 (Forward rotation selection) and RS2 (Reverse rotation selection).	Turn on RS1 (Forward rotation selection) or RS2 (Reverse rotation selection).	
	The value selected in the speed control mode or the torque control mode is low.	Check SP1 (Speed selection 1), SP2 (Speed selection 2), and SP3 (Speed selection 3), and then check if the selected internal speed is correct.	Review the selections of SP1 (Speed selection 1), SP2 (Speed selection 2), SP3 (Speed selection 3), and setting of internal speed.	
	The value selected in the positioning mode (point table method) with BCD input is low.	Check SPD1 (Speed selection 1), SPD2 (Speed selection 2), SPD3 (Speed selection 3) and SPD4 (Speed selection 4), and then check if the selected internal speed is correct.	Review the wiring. Review the selections of SPD1 (Speed selection 1), SPD2 (Speed selection 2), SPD3 (Speed selection 3), SPD4 (Speed selection 4), and setting of internal speed.	
	An analog signal is not inputted correctly.	Check the values of analog speed command and analog torque command using status display or MR Configurator2.	Input the analog signals correctly.	
	The ABS transfer mode is selected when the absolute position detection system is used.	Check if ABSM is on.	Turn off ABSM.	
	The settings of the electronic gear are incorrect.	Check the setting value of the electronic gear.	Set a proper value of the electronic gear.	[A] [GF]
	The setting of point tables is incorrect.	Check the point table setting.	Review the point table setting.	

Description	Cause	Checkpoint	Action	Target
The servo motor does not operate.	The setting of the point table No. selection is incorrect.	Check the setting of the point table No. selection (CC-Link IE Field Network: RWwn06, CC-Link IE Field Network Basic: RWwn05).	Review the setting of the point table No. selection.	[GF]
	The setting of the next station No. selection is incorrect.	Check the setting of the next station No. selection (CC-Link IE Field Network: RWwn06, CC-Link IE Field Network Basic: RWwn05).	Review the setting of the next station No. selection.	
	RX (n + 3) F (cyclic communication ready) is off (00h).	Check if the controller does not set RY (n + 3) F (cyclic communication ready) to off (00h).	Set RY (n + 3) F (cyclic communication ready) to on (01h).	
	The control mode was not set with Modes of operation (6060h).	Check if the control mode was not set with Modes of operation (6060h).	Set the control mode with Modes of Operation (6060h).	
	The controller was stopped (STOP status). (CC-Link IE Field Network Basic-compatible controller and protocol version 1 or earlier)	Check if the controller is stopped (STOP status).	Run the controller (RUN status). For the protocol version compatible with the controller, contact the controller manufacturer.	
	An error occurred in the controller. (CC-Link IE Field Network Basic-compatible controller only)	Check if an error occurs in the controller.	Remove the error in accordance with the controller instruction manual.	
	Wiring or the command pulse multiplication setting is incorrect.	When using an MR-HDP01 manual pulse generator, check the wiring and the command pulse multiplication setting (assignment of TP0, TP1 and [Pr. PT03] setting).	Review the wiring and the command pulse multiplication setting.	[A]
	Power is not supplied to the MR-HDP01 manual pulse generator.	A power supply is not connected between +5 V to 12 V and 0 V of MR-HDP01.	Connect a power supply between +5 V to 12 V and 0 V of MR-HDP01.	
	Power is not supplied to OPC (power input for open-collector sink interface).	Between DICOM and OPC of the CN1 connector of the servo amplifier is not connected.	Connect between DICOM and OPC.	
	Power is not supplied to OPC (power input for open-collector sink interface).	Between DICOM and OPC of the CN1 connector of the servo amplifier is not connected.	Connect between DICOM and OPC.	
	The axis is disabled.	Check if the disabling control axis switch is on. [B]: SW2-2 [WB]: SW2-2 to 4	Turn off the disabling control axis switch.	[B] [WB]
	An error is occurring on the servo system controller side.	Check if an error is occurring on the servo system controller side.	Cancel the error of the servo system controller.	
	The setting of a parameter is incorrect on the servo system controller side.	Check the settings of parameters on the servo system controller side.	Review the setting of the parameter on the servo system controller side.	
	The position command is not inputted correctly.	Check cumulative command pulses using MR Configurator2 and check if numerical values are changed by inputting the command.	Review the setting of the servo system controller and the servo program.	
	The connection destination of the encoder cable is incorrect.	Check if the connection destinations of CN2A, CN2B, and CN2C are the same as CNP3A, CNP3B, and CNP3C.	Connect encoder cables correctly.	[WB]

Description	Cause	Checkpoint	Action	Target
The speed of the servo motor or linear servo motor is not increased. Or the speed is increased too much.	The setting of the speed command, speed limit, or electronic gear is not correct.	Check the settings of the speed command, speed limit, and electronic gear.	Review the settings of the speed command, speed limit, and electronic gear.	[A] [B] [WB] [RJ010] [GF]
	The connection of the servo motor is incorrect.	Check the wiring of U/V/W.	Connect it correctly.	
	The voltage of the main circuit power supply has dropped.	Check if the voltage of the main circuit power supply dropped.	Increase the voltage of the main circuit power supply.	
	For a servo motor with an electromagnetic brake, the brake has not released.	Check the power supply of the electromagnetic brake.	Turn on the electromagnetic brake power.	
	The selection of SP1 (Speed selection 1), SP2 (Speed selection 2), or SP3 (Speed selection 3) is incorrect in the speed control mode or the torque control mode.	Check SP1 (Speed selection 1), SP2 (Speed selection 2), and SP3 (Speed selection 3), and then check if the selected internal speed is correct.	Review the settings of SP1 (Speed selection 1), SP2 (Speed selection 2), SP3 (Speed selection 3), and setting of internal speed.	[A]
	An analog signal is not input correctly in the speed control mode or the torque control mode.	Check the values of the analog speed command and the analog torque command using the status display or MR Configurator2.	Input the analog signal correctly.	
	The selection of SPD1 (Speed selection 1), SPD2 (Speed selection 2), SPD3 (Speed selection 3), or SPD4 (Speed selection 4) is incorrect in the positioning mode (point table method) with BCD input.	Check SPD1 (Speed selection 1), SPD2 (Speed selection 2), SPD3 (Speed selection 3) and SPD4 (Speed selection 4), and then check if the selected internal speed is correct.	Review the wiring. Review the settings of SPD1 (Speed selection 1), SPD2 (Speed selection 2), SPD3 (Speed selection 3), SPD4 (Speed selection 4), and setting of internal speed.	
	An analog signal is not input correctly in the positioning mode (point table method and program method).	Check the value of VC (Analog override) using the status display or MR Configurator2.	Set the VC (Analog override) and input the analog signal correctly.	
	The selection of OV0 (Digital override selection 1), OV1 (Digital override selection 2), OV2 (Digital override selection 3), or OV3 (Digital override selection 4) is incorrect in the positioning mode (indexer method).	Check OV0 (Digital override selection 1), OV1 (Digital override selection 2), OV2 (Digital override selection 3) and OV3 (Digital override selection 4), and then check if the selected override level ([%]) is correct.	Review the wiring. Review the settings of OV0 (Digital override selection 1), OV1 (Digital override selection 2), OV2 (Digital override selection 3), and OV3 (Digital override selection 4).	
The servo motor vibrates with low frequency.	The estimated value of the load to motor inertia ratio by auto tuning is incorrect. When the load to motor inertia ratio is set by manual, the setting value is incorrect.	If the servo motor may be driven with safety, repeat acceleration and deceleration several times to complete auto tuning. Check if the load to motor inertia ratio is proper compared with the actual ratio for manual setting.	Execute auto tuning and one-touch tuning to reset the load to motor inertia ratio. Set the load to motor inertia ratio correctly for manual setting.	[A] [B] [WB] [RJ010] [GF]
	The command from the controller is unstable.	Check the command from the controller.	Review the command from the controller. Check the cable for command if there is failure such as disconnection.	
	Torque or thrust during acceleration/deceleration is overshooting exceeding the limit of the servo motor when the motor stops.	Check the effective load ratio during acceleration/deceleration if torque/thrust exceeds the maximum torque/thrust.	Reduce the effective load ratio by increasing acceleration/deceleration time and reducing load.	
	The servo gain is low. Or the response of auto tuning is low.	Check if the trouble is solved by increasing auto tuning response ([Pr. PA09]).	Adjust gains.	

Description	Cause	Checkpoint	Action	Target
An unusual noise is occurring at the servo motor.	The servo gain is low. Or the response of auto tuning is low.	Check if the trouble is solved by increasing auto tuning response ([Pr. PA09]).	Adjust gains.	[A] [B] [WB] [RJ010] [GF]
	Bearing life expired.	If the servo motor may be driven with safety, remove the load and check the noise with the servo motor only. If you can remove the servo motor from machine, remove the servo motor power cable to release the brake and check the noise by rotating the shaft by your hands.	Noising means that the bearing life expired. Replace the servo motor. When not noising, maintain the machine.	
	For a servo motor with an electromagnetic brake, the brake has not released.	Check the power supply of the electromagnetic brake.	Turn on the electromagnetic brake power.	
	For a servo motor with an electromagnetic brake, the brake release timing is not correct.	Check the brake release timing.	Review the brake release timing. Please consider that the electromagnetic brake has release delay time.	
The servo motor vibrates.	The servo gain is too high. Or the response of auto tuning is too high.	Check if the trouble is solved by reducing auto tuning response ([Pr. PA09]).	Adjust gains.	[A] [B] [WB] [RJ010] [GF]
	The machine is vibrating (resonating).	If the servo motor may be driven with safety, check if the trouble is solved by one-touch tuning or adaptive tuning.	Adjust the machine resonance suppression filter.	
	The load side is vibrating.	If the servo motor may be driven with safety, check if the trouble is solved by advanced vibration suppression control Ⅱ.	Execute the advanced vibration suppression control Ⅱ.	
	Feedback pulses are being miscounted due to entered noise into an encoder cable.	Check the cumulative feedback pulses using status display (only [A]) or MR Configurator2 if its numerical value is skipped.	Please take countermeasures against noise by laying the encoder cable apart from power cables, etc.	
	There is a backlash between the servo motor and machine (such as gear, coupling).	Check if there is a backlash on the machine.	Adjust the backlash on the coupling and machine.	
	The rigidity of the servo motor mounting part is low.	Check the mounting part of the servo motor.	Increase the rigidity of the mounting part by such as increasing the board thickness and by reinforcing the part with ribs.	
	The connection of the servo motor is incorrect.	Check the wiring of U/V/W.	Connect it correctly.	
	An unbalanced torque of the machine is large.	Check if the vibration varies depending on the speed.	Adjust balance of the machine.	
	The eccentricity due to core gap is large.	Check the mounting accuracy of the servo motor and machine.	Review the accuracy.	
	A load for the shaft of the servo motor is large.	Check the load for the shaft of the servo motor.	Adjust the load for the shaft to within specifications of the servo motor. For the shaft permissible load, refer to "Servo Motor Instruction Manual (Vol. 3)".	
	An external vibration propagated to the servo motor.	Check the vibration from outside.	Prevent the vibration from the external vibration source.	

Description	Cause	Checkpoint	Action	Target
The rotation accuracy is low. (The speed is unstable.)	The servo gain is low. Or the response of auto tuning is low.	Check if the trouble is solved by increasing auto tuning response ([Pr. PA09]).	Adjust gains.	[A] [B] [WB] [RJ010] [GF]
	The torque is insufficient due to large load.	Check instantaneous torque using status display (only [A]) or MR Configurator2 if the load exceeds the maximum torque or torque limit value.	Reduce the load or use a larger capacity servo motor.	
	An unintended torque limit has been enabled.	Check if TLC (Limiting torque) is on using status display or MR Configurator2.	Cancel the torque limit.	
	The setting of the torque limit is incorrect.	Check if the limiting torque is too low. [A]: [Pr. PA11] and [Pr. PA12], or analog input [B] [WB] [RJ010]: Setting on controller side [GF]: [Pr. PA11], [Pr. PA12], or setting on controller side	Set it correctly.	
	For a servo motor with an electromagnetic brake, the brake has not released.	Check the power supply of the electromagnetic brake.	Turn on the electromagnetic brake power.	
	The command from the controller is unstable.	Check the ripple of the command frequency with MR Configurator2.	Review the command from the controller. Check the cable for command if there is failure such as disconnection.	
The machine vibrates unsteadily when it stops.	The servo gain is low. Or the response of auto tuning is low.	Check if the trouble is solved by increasing auto tuning response ([Pr. PA09]).	Adjust gains.	[A] [B] [WB] [RJ010] [GF]
The servo motor starts to drive immediately after power on of the servo amplifier. The servo motor starts to drive immediately after servo-on.	SON (Servo-on) is on at power on.	Check if SON (Servo-on) and RD (Ready) are on using status display or MR Configurator2.	Review the sequence of SON (Servo-on).	[A]
	An analog signal is inputted from the beginning.	Check the status of analog speed command and analog torque command using status display or MR Configurator2.	Review the timing of inputting analog signals.	
	Zero point of an analog signal deviates.	Check if the servo motor drives while 0 V is inputted to the analog signal.	Execute the VC automatic offset or adjust offset of the analog signal with [Pr. PC37] or [Pr. PC38].	
	For a servo motor with an electromagnetic brake, the brake release timing is not correct.	Check the brake release timing.	Review the brake release timing.	[A] [B] [WB] [RJ010] [GF]
	The connection of the servo motor is incorrect.	Check the wiring of U/V/W.	Connect it correctly.	
Home position deviates at home position return.	For the dog type home position return, the point which the dog turns off and the point which Z-phase pulse is detected (CR input position) are too close.	Check if a fixed amount (in one revolution) deviates.	Adjust the dog position.	[A] [B] [WB] [RJ010] [GF]
	The in-position range is too large.	Check the setting of the in-position range in [Pr. PA10].	Set a narrower in-position range.	
	The proximity dog switch is failure. Or mounting proximity dog switch is incomplete.	Check if the proximity dog signal is inputted correctly.	Repair or replace the proximity dog switch. Adjust the mounting of the proximity dog switch.	
	The program on the controller side is incorrect.	Check the program on the controller side such as home position address settings or sequence programs.	Review the programs on the controller side.	

Description	Cause	Checkpoint	Action	Target
The position deviates during operation after home position return.	The position command and actual machine position are different.	Check that "cumulative feedback pulses × travel distance per pulse" matches the actual machine position. Check if "cumulative feedback pulses × feed length multiplication" matches the actual machine position.	Review the position command and electronic gear setting.	[A] [B] [WB] [RJ010] [GF]
	The position command and actual machine position are different.	Check that "cumulative feedback pulses × travel distance per pulse" matches the actual machine position. Check if "cumulative feedback pulses × feed length multiplication" matches the actual machine position.	Review the position command and electronic gear setting.	
	An alarm or warning is occurring.	Check if an alarm or warning is occurring.	Check the content of the alarm/warning and remove its cause.	
	The servo gain is low. Or the response of auto tuning is low.	Check if the trouble is solved by increasing auto tuning response ([Pr. PA09]).	Adjust gains.	
	The reduction ratio is not calculated correctly for the geared servo motor.	Check the following settings. [A]: Number of command input pulses per revolution ([Pr. PA05]) or electronic gear ([Pr. PA06] and [Pr. PA07]) [B] [WB] [RJ010]: Number of pulses per revolution, travel distance (setting on the controller side) [GF]: Electronic gear ([Pr. PA06], [Pr. PA07])	Review the calculation of the reduction ratio.	
	The in-position range is too large.	Check the setting of the in-position range in [Pr. PA10].	Set a narrower in-position range.	

Description	Cause	Checkpoint	Action	Target
The position deviates during operation after home position return.	The command pulses were miscounted due to noise.	Check that the command value of the controller and the number of cumulative command pulses are matched.	Please take countermeasures against noise for the command cable. Review the shield procedure of the command cable.	[A]
	The cable for a command is connected loosely or disconnected.	Check that the command value of the controller and the number of cumulative command pulses are matched.	Repair the cable for a command.	
	Frequency of the pulse train command is too high.	Check the pulse train command frequency is within the range of specifications. It is 500 kpulses/s or less for the open-collector type. It is 4 Mpulses/s or less for the differential line driver type.	Review the pulse train command frequency. Select a filter according to the pulse train command frequency from "Command input pulse train filter selection" in [Pr. PA13].	
	A cable for command is too long.	Check the ripple of the command frequency with oscilloscope.	Shorten the wiring length. Cable length must be 10 m or shorter for differential line driver output and 2 m or shorter for open-collector output.	
	SON (Servo-on) turned off during operation.	Check if SON (Servo-on) is off during operation using status display or MR Configurator2.	Review the wiring and sequence not to turn off SON (Servo-on) during operation.	
	CR (Clear) or RES (Reset) turned on during operation.	Check if CR (Clear) or RES (Reset) is on during operation using status display or MR Configurator2.	Review the wiring and sequence not to turn on CR (Clear) or RES (Reset) during operation.	
	The setting of point tables and start timing is incorrect.	Check if a time period from after switching timings of point table setting value and point table No. until a start timing is 3 ms or more.	Review the point table setting. Review the start timing.	
	An input signal to the MR-D01 extension IO unit is incorrect.	Check the selection of the point table No. selection 1 to point table No. selection 8 and check the wiring.	Check the input signal switch to the MR-D01 extension IO unit and check the wiring.	
	The program, start timing, etc. are incorrect.	Check if a time period from after switching timings of BCD input program and point table No. until a start timing is 3 ms or more, etc.	Review the controller programs.	
	The setting of MR-DS60 digital switch is incorrect.	Check the [Pr. Po10] setting.	Review the [Pr. Po10] setting.	
	The wiring between MR-DS60 digital switch and MR-D01 extension IO unit is incorrect.	Check the wiring between MR-DS60 digital switch and MR-D01 extension IO unit.	Review the wiring between MR-DS60 digital switch and MR-D01 extension IO unit.	
	Wiring of the MR-HDP01 manual pulse generator or setting of "manual pulse generator multiplication" ([Pr. PT03], TP0 (manual pulse generator multiplication 1), TP1 (manual pulse generator multiplication 2)) is incorrect.	The input value from the MR-HDP01 manual pulse generator and the command position do not match.	Review the wiring. Set the multiplication setting correctly.	
	A mechanical slip occurred. Or the backlash of the machine part is large.	Check if there is a slip or backlash on the machine part.	Adjust the machine part.	[A] [B] [WB] [RJ010] [GF]

Description	Cause	Checkpoint	Action	Target
A restoration position deviates at restoration of power for the absolute position detection system.	The motor was rotated exceeding the maximum permissible speed at power failure (6000 r/min) by an external force during servo amplifier power off. (Note: The acceleration time is 0.2 s or less.)	Check if the motor was accelerated suddenly to 6000 r/min by an external force.	Extend the acceleration time.	[A] [B] [WB] [RJ010] [GF]
	The servo amplifier power turned on while the servo motor was rotated exceeding 3000 r/min by an external force.	Check if the servo amplifier power turned on while the servo motor was rotated exceeding 3000 r/min by an external force.	Review the power-on timing.	
	Transfer data to the controller is incorrect.	Check the ABS data with MR Configurator2.	Review the controller programs.	[A]
Overshoot/undershoot occurs.	The servo gain is low or too high. The response of auto tuning is low or too high.	Check the velocity waveform with a graph using MR Configurator2 if overshoot/ undershoot is occurring.	Adjust the response of auto tuning and execute the gain adjustment again.	[A] [B] [WB] [RJ010] [GF]
	The setting of [Pr. PB06 Load to motor inertia ratio/ load to motor mass ratio] is incorrect.	Check that the setting value of [Pr. PB06 Load to motor inertia ratio/ load to motor mass ratio] and the actual load moment of inertia or load mass are matched.	Set it correctly.	
	Capacity shortage or shortage of the maximum torque (thrust) due to too large load.	Check the instantaneous torque using status display if the maximum torque (maximum thrust) exceeds the torque limit value (thrust limit value).	Reduce the effective load ratio by increasing acceleration/ deceleration time and reducing load.	
	The setting of the torque limit is incorrect.	Check the instantaneous torque using status display if the maximum torque (maximum thrust) exceeds the torque limit value (thrust limit value).	Review the torque limit setting.	
	Backlash of the machine part is large.	Check if there is a backlash on the machine part.	Adjust the backlash on the coupling and machine part.	
A communication with servo amplifier fails using MR Configurator2. (For details, refer to Help of MR Configurator2.)	The communication setting is incorrect.	Check the communication setting such as baud rate and ports.	Set the communication setting correctly.	[A] [B] [WB] [RJ010] [GF]
	A model is being connected other than the model set in model selection.	Check if the model selection is set correctly.	Set the mode selection correctly.	
	The driver was not set correctly.	Check the bottom of the USB (Universal Serial Bus) controller with the device manager of the personal computer if "MITSUBISHI MELSERVO USB Controller" is being displayed.	Delete an unknown device or other devices, cycle the power of the servo amplifier, and reset according to Found New Hardware Wizard.	
	They are off-line status.	Check if they are off-line.	Set them to on-line.	
	A communication cable is malfunctioning.	Check if the communication cable is malfunctioning.	Replace the communication cable.	
For a servo motor with an electromagnetic brake, the brake went out.	The electromagnetic brake is failure due to its life. For the life of electromagnetic brake, refer to "Servo Motor Instruction Manual (Vol. 3)".	Remove the servo motor and all wirings from the machine and check if the servo motor shaft can be rotated by hands. (If it is rotated by hands, the brake is failure.)	Replace the servo motor.	[A] [B] [WB] [RJ010] [GF]
The coasting distance of the servo motor became longer.	The load was increased and permissible load to motor inertia ratio was exceeded.	Check if the load was increased.	Reduce the load.	[A] [B] [WB] [RJ010] [GF]
	An external relay is malfunctioning. Or the wiring of MBR (Electromagnetic brake interlock) is incorrect.	Check the external relay and wirings connected to MBR (Electromagnetic brake interlock) if they are malfunctioning.	Replace the external relay. Or review the wiring.	
	The electromagnetic brake is failure due to its life. For the life of electromagnetic brake, refer to "Servo Motor Instruction Manual (Vol. 3)".	Remove the servo motor and all wirings from the machine and check if the servo motor shaft can be rotated by hands. (If it is rotated by hands, the brake is failure.)	Replace the servo motor.	

Description	Cause	Checkpoint	Action	Target
The program operation is not in progress.	The command speed of the positioning operation is low.	An abnormal value such as 0 [r/min] was set for specifying the servo motor speed.	Review the program.	[A]
	The program stops at the state of waiting for external signal on.	A program input number set with SYNC command does not match with the actual inputted signal.	Review the program or signal to use.	
A point table was executed but the operation did not start.	A positioning to the same position is repeated.	Multiple operation starts which have the same specified number of point table are in progress.	Review the setting of the point table or procedures of the operation.	[A] [GF]
		Positioning to a same point was endlessly repeated with automatic continuous operation "8, 9, 10, 11" was selected in sub functions of the point table operation.	Review the setting of the point table or procedures of the operation.	
The electromagnetic brake cannot be canceled.	The wiring is incorrect.	Check the SBC output signal.	Review the output signals.	[B]
	A signal of output device is not outputted correctly.	Check if the output device cable is wired correctly. Or check if a load of output device is over specifications.	Review the wiring or load.	
	The functional safety unit is malfunctioning.	Replace the functional safety unit, and then check the repeatability.	Replace the functional safety unit.	
A vertical axis falls while the SBC output is used.	The STO function is used during servo-on.	Check if the SS1 function is enabled.	Enable the SS1 function.	[B]
	A signal of output device is not outputted correctly.	Check if the output device cable is wired correctly. Or check if a load of output device is over specifications.	Review the wiring or load.	
	The functional safety unit is malfunctioning.	Replace the functional safety unit, and then check the repeatability.	Replace the functional safety unit.	
	The setting of a waiting time of the electromagnetic brake sequence output is incorrect.	Check if [Pr. PC02 Electromagnetic brake sequence output] and [Pr. PSA03 SS1 monitoring deceleration time] are set correctly.	Set it correctly.	
Modbus RTU communication is not established.	The servo amplifier is not set to Modbus RTU communication protocol.	Check if "communication protocol selection" in [Pr. PC71] is correctly set.	Select Modbus RTU protocol.	[A]
	The communication setting is not set correctly.	Check if [Pr. PC70 Modbus RTU communication station number setting] is set correctly.	Check [Pr. PC70 Modbus RTU communication station number setting] and the station No. specified in a Query message from the controller if they are matched together.	
		Check if "Modbus RTU communication baud rate selection" in [Pr. PC71] is set correctly.	Check "Modbus RTU communication baud rate selection" and the communication baud rate setting of the controller if they are matched together.	
		Check if "Modbus RTU communication parity selection" in [Pr. PF45] is set correctly.	Check "Modbus RTU communication parity selection" and the parity setting of the controller if they are matched together.	
	The servo amplifier is not compatible with Modbus RTU communication.	For MR-J4-_A_-RJ 100 W or more servo amplifier, check that the servo amplifier was manufactured in January 2015 or later. Check if MR-J4-_A_ servo amplifier or MR-J4-03A6(-RJ) servo amplifier is being used.	For MR-J4-_A_-RJ 100 W or more servo amplifier, use the one manufactured in January 2015 or later. (MR-J4-_A_ servo amplifier or MR-J4-03A6(-RJ) servo amplifier is not compatible with Modbus RTU communication.)	
	A communication cable is malfunctioning.	Check if the communication cable has any failure such as damage.	Replace the communication cable.	

Description	Cause	Checkpoint	Action	Target
RS-422 communication (Mitsubishi Electric general-purpose AC servo protocol) is not established.	The servo amplifier is not set to RS-422 communication protocol.	Check if "communication protocol selection" in [Pr. PC71] is correctly set.	Select RS-422/RS-485 communication (Mitsubishi Electric general-purpose AC servo protocol).	[A]
	The communication setting is not set correctly.	Check if [Pr. PC20 Station number setting] is set correctly.	Check [Pr. PC20 Station number setting] and the station No. specified by the controller if they are matched together.	
		Check if "RS-422 communication baud rate selection" in [Pr. PC21] is set correctly.	Check "RS-422 communication baud rate selection" and the communication baud rate setting of the controller if they are matched together.	
	A communication cable is malfunctioning.	Check if the communication cable has any failure such as damage.	Replace the communication cable.	
CC-Link IE Field Network Basic communication or SLMP is not established.	The IP address is not set correctly.	Check if [Pr. PN11 IP address setting A] and [Pr. PN12 IP address setting B] are set correctly.	Check if the parameter setting values match the designated IP address of the controller.	[GF]
		Check if [Pr. PN13 Subnet mask setting A] and [Pr. PN14 Subnet mask setting B] are set correctly.	Check if the parameter setting values are set correctly.	
	The IP address filter is not set correctly.	Check if [Pr. PN18 IP address filter A] and [Pr. PN19 IP address filter B] are set correctly.	Check if the parameter setting values match the address of external devices.	
		Check if [Pr. PN20 IP address filter A range specification] and [Pr. PN21 IP address filter B range specification] are set correctly.	Check if the parameter setting values are set correctly.	
	The designated operation IP address is not set correctly.	Check if [Pr. PN22 Operation specification IP address A] and [Pr. PN23 Operation specification IP address B] are set correctly.	Check if the parameter setting values match the IP address of the controller that transmits commands.	
		Check if [Pr. PN24 Operation specification IP address range specification] is set correctly.	Check if the parameter setting values are set correctly.	
	TCP is selected.	Check if TCP is selected with the communication setting.	Select UDP.	
	An Ethernet cable is malfunctioning.	Check if the Ethernet cable has any failure such as damage.	Replace the Ethernet cable.	
When CC-Link IE Field Network Basic is used, the servo motor stopped while the control command is on.	An alarm or warning is occurring.	Check if an alarm or warning is occurring.	Check the contents of the alarm/warning, and remove its cause.	
	The link device (cyclic communication ready) is off.	Check if the controller does not turn off the cyclic communication ready command.	Turn on the cyclic communication ready command.	
	An Ethernet cable was disconnected.	Check if the cable is disconnected from the connector (CN1).	Connect it correctly.	
	An Ethernet cable is malfunctioning.	Check if the Ethernet cable has any failure such as damage.	Replace the Ethernet cable.	

*1 ## indicates axis No.

1.7 Network module error codes

If an error occurs in the network module, a network module error code will be displayed in "Alarm Display" of MR Configurator2.

For details of the network module error codes, refer to "Exception Codes" of "Anybus CompactCom 40 Software Design Guide (Doc.Id. HMSI-216-125)".

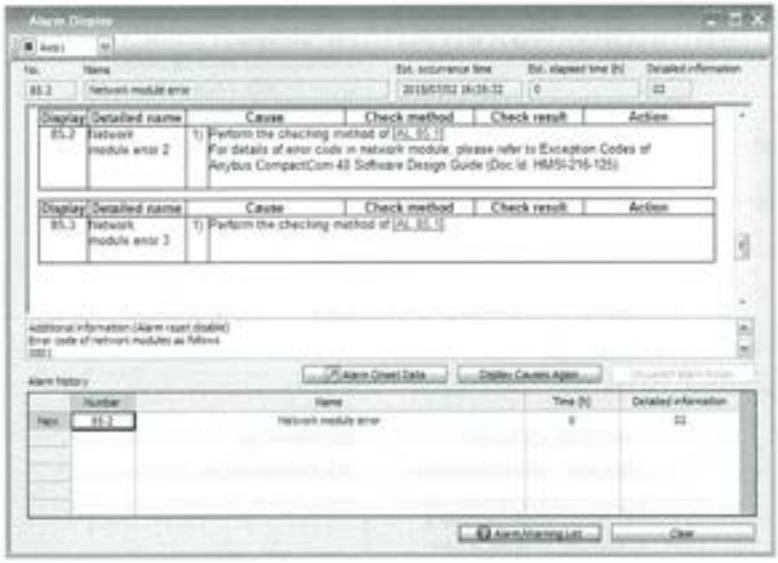

CLIMAX

BORTECH CALDER H&S TOOL