2014-2015

THERMAL SYSTEM CONTROL

CONTRÔLE SYSTÈMES THERMIQUES

ELEMENTOS DE CONTROLO TÉRMICO MOTOR

PRODUTO DE CONTROLE TÉRMICO

CONTROLLO SISTEMI TERMICI

MOTORKOELINGSSYSTEEM

THERMISCHE SYSTEME STEUERUNG

POMPY WODY I PODZESPOŁY KONTROLI OBIEGU PŁYNU

KONTROLA CHLAZENÍ MOTORU

MOTORHÜTÉS - KIEGÉSZÍTÖ ALKATRÉSZEK

CONTROLUL SISTEMULUI TERMIC

ЭЛЕМЕНТЫ СИСТЕМЫ ОХЛАЖДЕНИЯ ДВИГАТЕЛЯ

TERMIK SISTEM KUMANDASI

Ελεγχος Θερμικού συστήματος

www.valeoservice.com

*La technologie automobile, naturellement

valeo added™

Valeo

Automotive technology, naturally

Thermal control offer*

Make the difference with Valeo

Valeo offers a complete range of technological products at O.E. quality level to the challenging After-market.

FR Faites la différence avec Valeo.
Valeo propose une offre complète de produits technologiques de qualité première monte sur le marché exigeant de la rechange.

DE Valeo macht den Unterschied.
Valeo bietet ein Komplettsortiment an technologischen Produkten in O.E. Qualität für den Ersatzteilmarkt.

IT Fate la differenza con Valeo.
Valeo offre una gamma completa di prodotti tecnologici di qualità O.E per competere nel mondo dell'After-market.

NL Maak het verschil met Valeo.
Valeo biedt een volledig gamma van technologische producten op OE kwaliteitsniveau voor de uitdagende after-market.

TU Farki Valeo ile yakalayin.
Valeo rekabetçi yenileme pazarına teknolojik ürünlerden oluşan O.E. kalitesinde komple bir ürün gamı sunar.

SP Marca la diferencia con Valeo.
Valeo ofrece una gama completa de productos técnicos de calidad O.E. para competir en el mercado de Aftermarket.

RU Почувствуй разницу с Valeo.
Valeo предлагает полный спектр специализированной продукции с качеством оригинального производства для вторичного рынка автозапчастей.

HU Legyen különb A VALEO-VAL!
A Valeo komplett választékot nyújt a fejlett technológiát felvonultató termékekben gyári minőségben, utángyártott árszinten.

CZ Zjistěte rozdíl s výrobky valeo.
Valeo nabízí kompletní řadu výkonných výrobků v kvalitě O.E. pro trh náhradních dílů.

RO Faceţi Diferenţa cu valeo.
Valeo oferă o gamă completă de produse tehnologice pentru piaţa plină de provocări a aftermarket la nivelul de calitate O.E.

GR Κανετε τη διαφορα με τη valeo.
Η Valeo προσφέρει μια πλήρης σειρά τεχνολογικών προϊόντων ποιότητας O.E. στην απαιτητική αγορά του After-market.

600

Water Pump

Pompe à eau
Bomba de agua
Bomba de água
Pompa acqua
Waterpomp
Wasserpumpen
Pompa wodna
Vodní pumpa
Vízpumpa
Pompa de apă
Su pompasi
Водяной насос
Αντλία νερού

32

EGR Valve

Vanne EGR
Válvulas EGR (válvulas de refrigeradores de gases de escape)
Sensor de temperatura de água
Valvola EGR
Uitlaatgasrecirculatieklep
Zawór recyrkulacji spalin
EGR Ventil
EGR szelep (kipufogógáz-újrahasznosítás szelep)
Valvă EGR
EGR valfi
клапан EGR
EGR βαλβίδα (βαλβίδα ανακύκλωσης καυσαερίων)

8

Air Intake Throttle

Doseur d'air
Cuerpo de mariposa
Corpo de borboleta
Corpo farfallato
Gasklephuis
Regeklappe
Korpus przepustnicy
Hrdlo skrtici klapky
fojtószelep ház
Carcasa clapeta
Gaz kelebek mansonu
Патрубок дроссельной заслонки
Στόμιο πεταλούδας γκαζιού

376

Thermostat

Thermostat
Termostato
Termostato
Termostato
Thermostaat
Thermostate
Termostat
Termostat
Termosztát
Termostat
Termostat
Термостат
Θερμοστάτης

48

Water Temperature Sensor

Sonde à thermistance
Sensor de temperatura de água
Válvula EGR
Sensore temperatura acqua
Watertemperatuursensor
Wassertemperaturfühler
Czujnik temperatury wody
Snímač teploty vody
Vízhőmérséklet-érzékelő
Comutator de temperatură
Su sicaklik sensörü
датчик температуры воды
Αισθητήρας θερμοκρασίας νερού

119

Thermoswitch

Thermocontact
Termocontacto
Termocontato
Termocontatto
Thermokontakt
Thermoschalter
Włącznik wentylatora
Tepelný spínač
Hőkapcsoló
Termocontact
Fan müşiri
Термодатчик

UK *2 Catalogues make up the complete Valeo Thermal Offer
FR *2 Catalogues présentent l'offre Thermique Valeo
DE *2 Kataloge bilden das komplette Valeo-Angebot im Bereich Motorkühlung ab
IT *2 Cataloghi completano l'offerta Valeo Thermal Loop
NL *2 Catalogi deel uitmaken van de volledige Valeo Thermal aanbieding
TR *2 katalogdan oluşan komple Valeo termal sunumu

SP *2 Catálogos que recogen la oferta completa de Valeo Térmico
RU *2 каталога содержат полную информацию о предложениях Valeo по термо системам
HU *A teljes választék megtalálható 2 katalógusban
CZ *Celý sortiment je rozdělen do 2 katalogů
RO *2 Cataloage formează oferta completă «valeo termic»
GR **2 Κατάλογοι συνιστούν την ολοκληρωμένη προσφορά για το σύστημα ψύξης, από τη Valeo

10 reasons to choose Valeo

FR 10 raisons de choisir Valeo
DE 10 Gründe für Valeo
IT 10 ragioni per scegliere Valeo
NL 10 redenen om te kiezen voor Valeo
TR Valeo seçmek için 10 sebep
SP 10 razones para elegir Valeo
RU 10 причин выбрать Valeo

1 Original quality products

valeorigin

FR Qualité première monte
DE Produkte in Originalqualität
IT Prodotti di Qualità O.E.
NL Originele Kwaliteit Product
TR Orjinal Kalite Ürünler
SP Producto de calidad Primer Equipo
RU Продукция оригинального качества

2 Long lasting performance

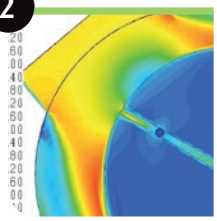

FR Performance longue durée
DE langanhaltende Leistung
IT Performance che durano nel tempo
NL Langdurige gelijkblijvende prestaties
TR Uzun ömürlü performans
SP Alto rendimiento durante largo tiempo
RU Длительный срок эксплуатации

3 High Technology & performing materials

FR Haute technologie et performance des matériaux
DE Hohe Technologie & leistungsstarke Materialien
IT Materiali altamente tecnologici e performanti
NL Hoge Technology & presterende materialen
TR Yüksek teknoloji ve üstün malzeme
SP Alta tecnología & materiales de altas prestaciones
RU Высокие технологии и качественные материалы

4 Innovative solutions to reduce fuel consumption, NOx and CO_2 emission

FR Solutions innovantes afin de réduire la consommation de carburant, d'oxyde d'azote (NOx) et de CO_2
DE Innovative Lösungen zur Reduzierung von Kraftstoffverbrauch, NOx und CO_2 Emmissionen
IT Soluzioni innovative per la riduzione del consumo di carburante, delle emissioni di Co_2 e dei gas nocivi Nox
NL Innovatieve oplossingen voor het verlagen van het brandstofverbruik, NOx en de CO_2-uitstoot
TR Yakıt tüketimi, NOx ve Karbondioksit salınımını azaltmada yenilikçi çözümler
SP Soluciones innovadoras para reducir el consumo de combustible y las emisiones de CO_2 y Óxidos de Nitrógeno
RU Инновационные решения для снижения потребления топлива Nox и выбросов CO_2

5 Traceability

FR Traçabilité
DE Rückverfolgung
IT Tracciabilità
NL Traceerbaarheid
TR Bulunabilirlik
SP Trazabilidad
RU Контроль качества

6 Wide coverage range

FR Large couverture de gamme
DE Sortiment mit hoher Abdeckung
IT Ampia copertura di gamma
NL Geniş kapsamlı sunum
TR Wide coverage range
SP Amplia cobertura de gama
RU Широкий ассортимент

7 2013 Winner of the Premier Automotive Suppliers' Contribution to Excellence for the Air Intake Module

(integrated solution of Intercooler + Air intake manifold + EGR Valve)

FR Prix d'Excellence 2013 des équipementiers automobiles pour la contribution en matière de module d'admission d'air (système intégré de solutions de refroidissement d'air de suralimention refroidi à l'eau avec sa vanne EGR) intégrée.
DE Gewinner des PACE Award 2013 für das Luftansaugmodul (Kombination aus Ladeluftkühler, Ansaugkrümmer und AGR Ventil)
IT Vincitore del premio «Premier Automotive Suppliers' Contribution to Excellence 2013» per il modulo d'aspirazione dell'aria (soluzione integrata composta da intercooler + collettore d'aspirazione + Valvola EGR)
NL Winnaar van de Premier Automotive Suppliers' Contribution to Excellence-prijs (2013) voor de luchtinlaatmodule (geïntegreerde oplossing van intercooler + luchtinlaatspruitstuk + UGR-klep)
TR Ana Otomotiv Tedarikçileri'nin Hava Girişi Modülündeki mükemmeliğe katkısı konusunda 2013 1.si (turbo radyatörü entegre çözüm + hava emme manifoldu + EGR valfi)
SP Ganador 2013 del Premio: Contribución a la Excelencia de los Proveedores de Automoción gracias al módulo del cuerpo mariposa (solución integral del intercooler + colector de admisión + válvula EGR)
RU Победитель в 2013 году среди ведущих автопроизводителей за вклад в усовершенствование воздухозаборного модуля (интегрированное решение: интеркулер + впускной воздушный патрубок + клапан EGR)

8 Full package accessories

FR Pack accessoires complet
DE vollständiges Zubehör
IT Completo di tutti gli accessori necessari
NL Volledig pakket accessoires
TR Tam paket aksesuarlar
SP Todos los accesorios incluidos
RU Полный пакет аксессуаров

9 Full module provider

FR Fournisseur du module complet
DE Komplettsystemanbieter
IT Fornitore del modulo completo
NL Leverancier van volledige module
TR Tam modül sağlayıcısı
SP Proveedor de módulo completo
RU Поставщик полного модуля

10 Multi-specialist

FR Multi spécialiste
DE Multispezialist
IT Multi specialista
NL Multispecialist
TR Çoklu uzman
SP Multi especialista
RU Универсальный поставщик

Thermal control offer*

600

Water Pump

Pompe à eau
Bomba de agua
Bomba de água
Pompa acqua
Waterpomp
Wasserpumpen
Pompa wodna
Vodní pumpa
Vízpumpa
Pompa de apă
Su pompasi
Водяной насос
Αντλία νερού

32

EGR Valve

Vanne EGR
Válvulas EGR (válvulas de refrigeradores de gases de escape)
Sensor de temperatura de água
Valvola EGR
Uitlaatgasrecirculatieklep
Zawór recyrkulacji spalin
EGR Ventil
EGR szelep (kipufogógáz-újrahasznosítás szelep)
Valvă EGR
EGR valfi
клапан EGR
EGR βαλβίδα (βαλβίδα ανακύκλωσης καυσαερίων)

8

Air Intake Throttle

Doseur d'air
Cuerpo de mariposa
Corpo de borboleta
Corpo farfallato
Gasklephuis
Regeklappe
Korpus przepustnicy
Hrdlo skrtici klapky
fojtószelep ház
Carcasa clapeta
Gaz kelebek mansonu
Патрубок дроссельной заслонки
Στόμιο πεταλούδας γκαζιού

376

Thermostat

Thermostat
Termostato
Termostato
Termostato
Thermostaat
Thermostate
Termostat
Termostat
Termosztát
Termostat
Termostat
Термостат
Θερμοστάτης

48

Water Temperature Sensor

Sonde à thermistance
Sensor de temperatura de água
Válvula EGR
Sensore temperatura acqua
Watertemperatuursensor
Wassertemperaturfühler
Czujnik temperatury wody
Snímač teploty vody
Vízhőmérséklet-érzékelő
Comutator de temperatură
Su sicaklik sensörü
датчик температуры воды
Αισθητήρας θερμοκρασίας νερού

119

Thermoswitch

Thermocontact
Termocontacto
Termocontato
Termocontatto
Thermokontakt
Thermoschalter
Włącznik wentylatora
Tepelný spínač
Hőkapcsoló
Termocontact
Fan müşiri
Термодатчик

UK *2 Catalogues make up the complete Valeo Thermal Offer
FR *2 Catalogues présentent l'offre Thermique Valeo
DE *2 Kataloge bilden das komplette Valeo-Angebot im Bereich Motorkühlung ab
IT *2 Cataloghi completano l'offerta Valeo Thermal Loop
NL *2 Catalogi deel uitmaken van de volledige Valeo Thermal aanbieding
TR *2 katalogdan oluşan komple Valeo termal sunumu

SP *2 Catálogos que recogen la oferta completa de Valeo Térmico
RU *2 каталога содержат полную информацию о предложениях Valeo по термо системам
HU *A teljes választék megtalálható 2 katalógusban
CZ *Celý sortiment je rozdělen do 2 katalogů
RO *2 Cataloage formează oferta completă «valeo termic»
GR **2 Κατάλογοι συνιστούν την ολοκληρωμένη προσφορά για το σύστημα ψύξης, από τη Valeo

183

Engine Cooling P/N (103 News)

FR Offre boucle thermique* / 1 183 références Thermique Moteur (dont 103 nouveautés)
DE Sortiment Kühlungskreislauf* / 1 183 Artikel (103 Neuheiten)
IT Offerta Thermal Loop* / 1 183 codici (103 Nuovi)
NL Thermische Loop Aanbod * / 1 183 Motor Koeling PN (103 Nieuw)
TR Tüm termal çevrim sunumu* / 1 183 Motor Soğutma parça numarası (103 yenilik)
SP Oferta circuito térmico*/ 1 183 Referencias térmico motor (103 nuevas)
RU Предложение Thermal Loop* / 1 183 Engine Cooling PN (103 Новинок)
HU Motorhűtés alkatrészek választéka* / 183 cikkszám, 103 újdonság
CZ Celá nabídka dílů okruhu chlazení motoru* / 1 183 položek (vč. 103 nových)
RO O ofertă completă pentru sistemul de racire motor cu 1 183 coduri (103 noi)
GR Προσφορά για το κύκλωμα ψύξης*/ 1183 Κωδικοί (103 Νέοι)

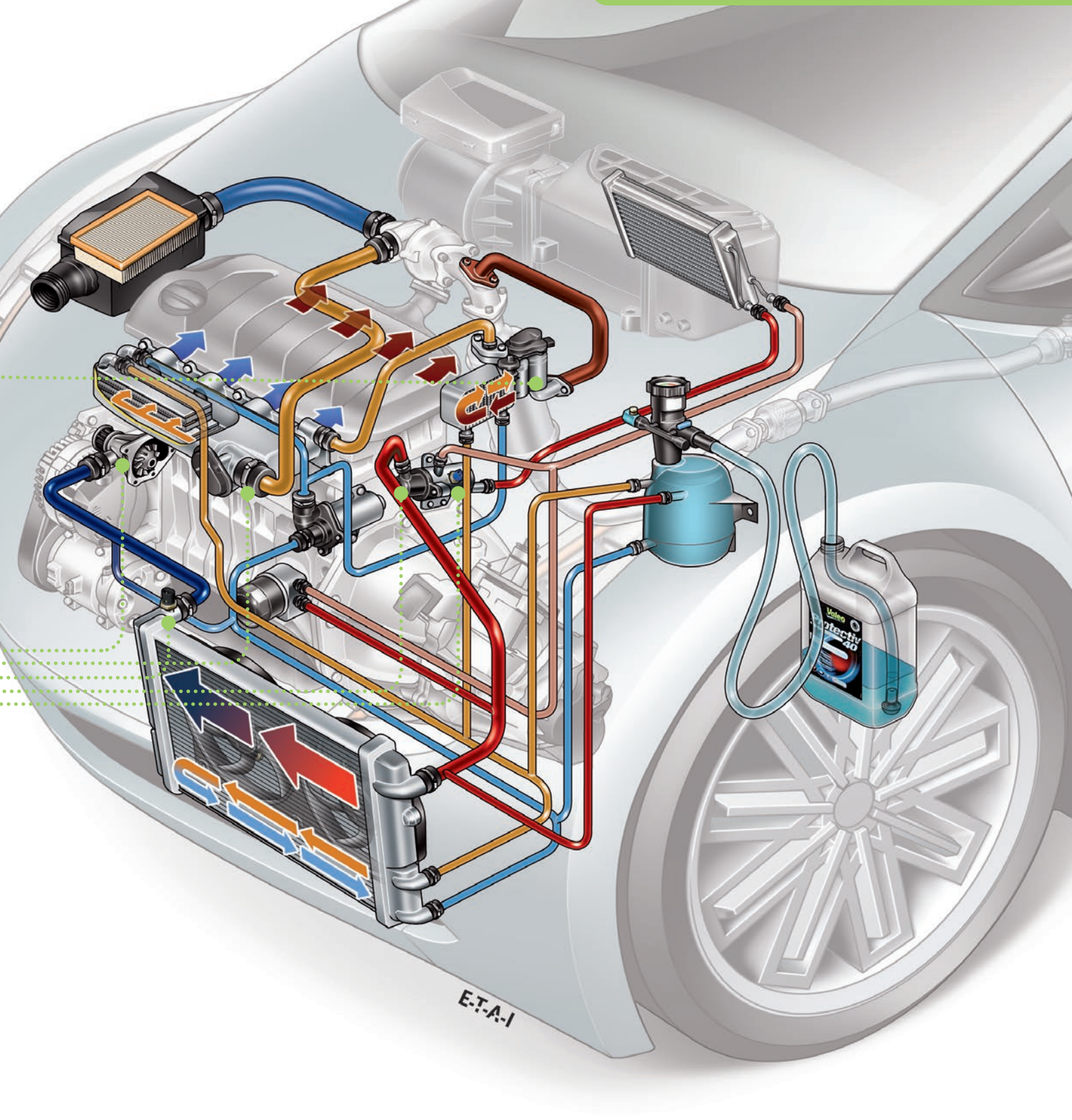

GENERAL SYMBOLS & ABBREVIATIONS

●
New Part Number
Nouvelles références
Neuaufnahme
Nuevas referencias
Novas referências
Nuovi riferimenti
Nieuwe referenties
Nowa referencja
Новые артикулы
Nové katalogové číslo
Új cikkszám
Noile referinte
Yeni referans
Νέους κωδικούς

▲
Soon available P/N
References disponibles prochainement
Artikel in Kurze lieferbar
Referencias disponibles proximamente
Referencias disponiveis proximamente
Riferimenti disponibili nei prossimi mesi
Binnenkort leverbaar
Produkt wkrotce dostępny
Позиции скоро будут доступны
Produkt brzy dostupny
Uskoro u prodaji
Referinţele disponibile in curand
Yakında sunulacak
Κωδικούς σύντομα διαθσιμα

Vehicle
Véhicule
Vehículo
Veículo
Veicolo
Voertuig
Fahrzeug
Pojazd
Vozidlo
Gépjármı
Vehicul
Araç
АВТОМОБИЛЬ
Οχημα

Fuel type
Energie
Combustible
Tipo de combustivel
Alimentazione
Type Brandstof
Kraftstoffart
Rodzaj zasilania
Druh paliva
Üzemanyag
Carburant
Yakıt tipi
ТОПЛИВО
Τύνος καυσίμου

CC
Cubic capacity
Cylindrée
Cilindrada
Cilindrada
Cilindrata
Cilinder
Hubraum
Pojemnoêç silnika
Zdvihov˘ objem
Hengerırtartalom
Cilindree
Silindir hacmi
ОБЪЕМ ДВИГАТЕЛЯ
Κυβικά

Engine type
Type de moteur
Tipo de motor
Tipo de motor
Tipo di motore
Motortype
Motortyp
Typ silnika
Typ motoru
Motor tipus
Tip motor
Motor tipi
ДВИГАТЕЛЬ
Τύνος κινητήρα

Chassis No
N° de Chassis
N° de Chasis
N° de Chassis
N° di telaio
Chassis nr
Fahrgestell-Nr.
Numer nadwozia
Podvozek č.
Alvaz szam
Şasi Numarası
номер шасси
Αριθμς Σασί

Gearbox Type
Type de boîte de vitesse
Tipo de caja de cambios
Tipo de câmbio
Tipo di cambio
Versnellingsbak
Getriebetyp
Rodzaj skrzyni biegów
Typ pfievodovky
Sebességváltó tipus
Tip cutie viteze
Şanzıman tipi
КОРОБКА ПЕРЕДАЧ
Τύνος κιβωτίου ταχυτήτων

AC
Air conditioning
Air conditionné
Aire acondicionado
Ar-condicionado
Climatizzazione
Airconditioning
Klimaanlage
Klimatyzacja
Klimatizace
Légkondicionáló
Aer condiţionat
Klima
КОНДИЦИОНЕР
Κλιματισμής

Information
Informations
Información
Informaçao
Informazioni
Informatie
Information
Informacja
Informace
Informació
Informaţii
Bilgi
ИНФОРМАЦИЯ
Πληροφορίες

Date of application
Période de fabrication
Año
Ano
Anno
Bouwjaar
Baujahr
Lata produkcji
Rok v˘roby
Gyártási dátum
Data de fabricaţie
Uygulama tarihi
ВЫПУСК
Ημερομηνία κατασκευής

Ending Temperature (°C)
Température coupure (°C)
Temperatura de cierre (°C)
Temperatura de encerramento (°C)
Temperatura d'interruzione (°C)
Eind temperatuur (°C)
Abschalttemperatur (°C)
Temperatura wy∏àczenia wentylatora (°C)
Teplota pro vypnutí vûtráku
Befejezési hŒmérséklet (°C)
Temperatură de oprire (°C)
Devreden çıkma sıcaklığı (°C)
КОНЕЧНАЯ ТЕМПЕРАТУРА
Μέγιστη θερμοκρασία

Starting Temperature (°C)
Température déclenchement (°C)
Temperatura de arranque (°C)
Temperatura de arranque (°C)
Temperatura d'avvio (°C)
Start temperatuur (°C)
Einschalttemperatur (°C)
Temperatura w∏àczenia wentylatora (°C)
Teplota zapnutí vûtráku (°C)
Indulási hŒmérséklet (°C)
Temperatură de declanţare (°C)
Devreye girme sıcaklığı (°C)
НАЧАЛЬНАЯ ТЕМПЕРАТУРА
Αρχική θερμοκρασία

Opening Temperature (°C)
Température d'ouverture (°C)
Temperatura de apertura (°C)
Temperatura de abertura (°C)
Temperatura d'apertura (°C)
Opening temperatuur (°C)
Öffnungstemperatur (°C)
Temperatura otwarcia termostatu (°C)
Teplota otevfiení termostátu (°C)
Nyitási hŒmérséklet (°C)
Temperatură de deschidere (°C)
Açma sıcaklığı (°C)
ТЕМПЕРАТУРА ОТКРЫВАНИЯ
Θερμοκρασία έναρξης

D
Diesel
Diesel
Diesel
Diesel
Diesel
Diesel
Diesel
Diesel
Diesel
Diesel
Diesel
ДИЗЕЛЬ
Πετρέλαιο

TD
Turbo-Diesel
Turbo-Diesel
Turbo-Diesel
Turbo-Diesel
Turbo-Diesel
Turbo-Diesel
Turbo-Diesel
Turbo-Diesel
Turbo-Diesel
Turbo-Diesel
Turbo-Diesel
ТУРБО-ДИЗЕЛЬ
Πετρέλαιο turbo

E
Petrol
Essence
Gasolina
Gasolina
Benzina
Benzine
Benzin
Benzyna
Benzin
Benzin
Benzină
Benzin
БЕНЗИН
Βενζίνη

G
Liquid Petroleum Gas (LPG)
Gaz de pétrole liquifié (GPL)
Gas de petróleo licuefacto (GPL)
Gás de petróleo liquefeito (GPL)
GPL (Gas di petrolio liquido)
Gas (LPG)
Flüssiggastreibstoff (LPG)
Gaz p∏ynny (LPG)
Plyn (LPG)
Folyékony petroleum gáz (GPL)
Gaz Petrolier Lichefiat (GPL)
Likit petrol gazı (LPG)
ЖИДКИЙ ГАЗ
Υγραέριο

L
Electrical
Électrique
Eléctrico
Elétrico
Elettrico
Elektrisch
Elektrisch
Elektryczny
Elektrick˘
Elektromos
Electric
Elektrikli
ЭЛЕКТРИЧЕСКИЙ
Ηλεκτρική

A
Automatic Transmission
Boîte de vitesse automatique
Cambio Automático
Câmbio Automático
Cambio Automatico
Automaat
Automatik
Skrzynia automatyczna
Automatická pfievodovka
Automata sebességváltó
Transmisie automată
Otomatik şanzıman
АВТОМАТИЧЕСКАЯ КОРОБКА ПЕРЕДАЧ
Αυτήματη μετάδοση

M
Manual Transmission
Boîte de vitesse manuelle
Cambio manual
Câmbio manual
Cambio Manuale
Handgeschakeld
Schaltgetriebe
R˘czna skrzynia biegów
Manuální pfievodovka
Mechanikus sebességvált
Transmisie manuală
Manuel şanzıman
РУЧНАЯ КПП
Μηχανική μετάδοση

AC

+	With Avec Con Com Con Met Mit Z S Vele Cu Birlikte C με
-	Without Sans Sin Sem Senza Zonder Ohne Bez Nélkül Ayrı Fară Без χω¬ίς
R+	Manual Climate Control Climatisation régulée Aire Acondicionado manual Ar-condicionado manual Climatizzazione manuale Manuele Airconditioning Manuelle Klimaanlage Klimatyzacja r´czna Manuální klimatizace Manuális légkondicionáló Aer conditionat cu reglare manuala Manuel Klima КОНДИЦИОНЕР РУЧНАЯ КПП Χειροκίνητος έλεγχος κλιματισμού
ⓘ	
Aluminium engine	Aluminum engine Bloc moteur aluminium Bloque motor aluminio Bloco motor alumínio Blocco motore in alluminio Aluminium motor Aluminium-Motorblock Blok silnika aluminiowy Hliníkov˘ motorov˘ blok Aluminium motor Motor din aluminiu Motor bloku aliminyum ДВИГАТЕЛЬ С ЬЛОКОМ ЦИЛИНДРОВ ИЗ ЧУГУНА Κινητήρας αλουμινίου
Automatic fan	Automatic fan Ventilateur automatique Ventilador automático Ventilador automático Elettroventola automatica Automatische motorventilator Automatischer Lüfter Wentylator automatyczny Automatick˘ vûtrák Automatikus ventilátor Ventilator automat Otomatik Fan АВТОМАТИЧЕСКИЙ ВЕНТИЛЯТОР Αυτήματη φτερωτή
Cast iron engine	Cast iron engine Moteur en fonte Motor de acero Motor de aço Blocco motore in acciao Gietijzer motor Guß-Motorblock Blok silnika ˝eliwny Litinov˘ blok motoru Öntött vas motor Motor de fonta Motor bloku döküm ДВИГАТЕЛЬ С ЬЛОКОМ ЦИЛИНДРОВ ИЗ ЧУГУНА Κινητήρας ανή χυτοσίδηρο
+C	With cover Avec couvercle Con tapa Com tampa Con coperchio met huis mit Deckel Z osŢonà S krytkou Fedéllel Cu capac Kapaklı С КРЫШКОЙ με κάλυμα

DA+	Power assisted steering Direction assistée Dirección asistida Direçao asistida Servosterzo Stuurbekrachtiging ServolenkungWspomaganie kierownicy Servofiízení Szervókormány Direcţie asistată Hidrolik direksiyon УСИЛИТЕЛЬ РУЛЕВОГО УПРАВЛЕНИЯ Υδραυλική τιμήνι
HD	Heavy Duty Usage sévère Utilización severa Aplicações Pesadas Impieghi Pesanti Heavy Duty Schwere BeanspruchungSamochód ci˝arowy Pro nákladní vozy Nagy teljesítményı Folosinţă dificilă Aşır hizmet ТЯЖЕЛЫЕ УСЛОВИЯ ЭКСПЛУАТАЦИИà Υψηλής ανήδοσης
On engine	On engine Sur moteur Sobre motor Sobre motor Su motore Geplaatst op motor am Motor Na silniku Na motoru Motoron Pe motor Motor üzerinde НА ДВИГАТЕЛЕ νάνω στον κινητήρα
PC	Warm countries Pays chauds Países cálidos Países cálidos Paesi caldi Warme landen Warme Länder Kraje o wysokiej temperaturze Pro teplé klimatické podmínky Meleg országok Ţari calde Sıcak ülkeler СТРАНЫ С ЖАРКИМ КЛИМАТОМ Θερμές χώρες
	Joint Joint Junta Junta Giunto Verbinding Gehaüse Uszczelka Pfiipojeno Összekapcsolva Garniturã Bağlanti прокладка λάστιχο
	Pulley code Code poulie Código polea Código da Polia Codice puleggia Poulie code Riemenscheiben-Typ Kod koŢa pasowego Kód fiemenice Kód szíj tárcs Cod scripete Kasnak kodu Код ременного шкива Κωδικής τροχαλίας
CR	With toothed pulley Avec poulie crantée Con polea de dientes Com polia de dentes Con puleggia dentata Met getande poulie Zahnriemenscheibe Z koŢem z´batym S ozubenou fiemenicí Bórdás szíjjal Cu scripete dinţată Kanallı kasnakla birlikte С шестерней με οδοντωτή τροχαλία

N	Without Sans Sin Sem Senza Zonder Ohne Bez Nélkü Ayrı Fară БЕЭ χωρίς
SS	Smooth Lisse Liso Liso Liscia Glad Weich GŢadki hladk˘ sima Neted Düzgün Гладкий ô™αϊ
V	With V type pulley Avec poulie en V Con polea en forma de V Com polia em forma de V Con puleggia V Met V poulie Ausführung mit Einfachkeilriemenscheibe Z koŢem klinowym typu V S fiemenicí typu V V tipusu szíj tárcsa Cu spripete de tip V V tipi kasnakla birlikte С трапецеидальным шкивом типа V με τροχαλία τύνου

Ø

z	Number of teeth Nombre de dents Anzahl der Zähne Número de dientes Numero di denti Ilość zębów Aantal tanden Dişli sayısı Количество зубьев Αριθμός δοντιών
Ch.	Number of channels Nombre de canaux Anzahl der Leitungen Número de canales Numero di canali Numer kanałów Aantal kanalen Kanal sayısı Количество каналов Αριθμός καναλιών
V+CR	Mixed V and toothed Mixte V et crantee Mixta V y con dientes Mista V e com dentes Mista V e dentata Mix V en getande Ausführung für Einfachkeilriemenscheibe und Zahnriemen Mikst klinowe typ V i z´batym Kombinace fiemenice typu V a ozubené Vegyes V és fogazott Combinaţie de tip V ţi dinţată V tipi ve kanallı karışık Трапецеидалное + шестерня μικτή τύνου V και οδοντωτή
V+V	Double V type pulley Double poulie V Doble polea V Dupla polia em V Doppia puleggia V Dubbele V poulie Ausführung für Doppelkeilriemenscheibe Podwójny koŢo klinowe typu V Dvojitá fiemenice typu V Dupla V tipusu szíj tárcsa Spripete doublu de tip V çift V tipi kasnak Двойное трапецеидалное типа V δινλή τροχαλία τύνου V

V+vv	Mixed V and multi V types Mixte V et multi V Mixta V y multi V multi V Mista em V e multi V Mista V e multi V Mix V en multi V type Ausführung für Einfachriemen und Keilrippenriemen Mikst klinowe typ V i wieloklinowe typ V Kombinovaná fiemenice typu V a multi-V Vegyes V és multi V tipus Combinaţie V multi V V tipi ile çoklu V tipi karışık многотрапецеидалное типа V ÌÈÏÙ‹ Ù‡ÔÔ¯ V Ì·È ÔÔÏÏ·ÔÏÔ‡ Ù‡ÔÔ¯ V
vvv	With multi V pulley Avec poulie multi V Con polea multi V Com polia multi V Con puleggia multi V Met multi V poulie Ausführung mit Keilrippenriemenscheibe Z koƪem wieloklinowym typ V S fiemenicí typu multi-V Multi V szíj tárcsa Cu spripete de tip multi V Çoklu V tipi kasnakla birlikte С трапецеидалным типа V με τροχαλία νολλανλού τύνου V

G	With gearwheel Avec pignon Con engranaje Com engrenando Con ruota dentata Met Tandwiel Mit Zahnrad Z Koło zębate S Ozubené kolo A Fogaskerék Cu Roată dinţată Dişli ile С Подготовка με γρανάζι
P	Pneumatic Pneumatique Neumàtico Pneumática Pneumatica Pneumatiek Pneumatik Pneumatyka Pneumatický Pneumatic Pneumatikus Pnömatik Пневматика Πνευματικοί

E	Electrical Électrique Eléctrico Elétrico Elettrico Elektrisch Elektrisch Elektryczny Elektrick¯ Elektromos Electric Elektrikli ЭЛЕКТРИЧЕСКИЙ Ηλεκτρική

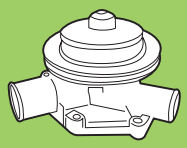

Valeo water pumps:
an essential range at the heart of the good functioning of the engine

3 reasons to choose valeo

FR 3 raisons de choisir Valeo
DE 3 Gründe für Valeo
IT 3 buone ragioni per scegliere Valeo
SP 3 razones para elegir Valeo
RU Три причины выбрать Valeo
PL 3 powodów aby wybrać Valeo
NL 3 redenen om Valeo te kiezen
TR Valeo seçmek için 3 neden
GR 3 λόγοι για να επιλέξετε Valeo

A wide range for a high coverage rate

1 **550** available part numbers

2 **86%** car parc in Europe

3 **+ 50** car makers covered

FR Une gamme large et un taux de couverture élevé. 550 références disponibles. 86 % de couverture du parc automobile européen. Plus de 50 constructeurs automobiles couverts.

DE ein breites Sortiment für eine hohe Fahrzeugabdeckung. 550 verfügbare Artikel. 86 % Fahrzeugabdeckung in Europa. über 50 Fahrzeugmarken abgedeckt

IT Una gamma completa per un alto tasso di copertura del parco circolante. 550 riferimenti disponibili. 86% del parco circolante europeo. +50 costruttori coperti.

SP Una amplia gama de productos para una alta tasa de cobertura del parque. 550 referencias disponibles. Cobertura del 86% del parque de vehículos de Europa. Servicio a más de 50 marcas de turismos.

RU Широкий ассортимент с высоким коэффициентом применяемости. в наличии 550 артикулов. 86% покрытия Европейского парка. применяемость у 50+ производителей.

PL Szeroka oferta produktów. 550 numerów referencyjnych. 86% pokrycia parku samochodowego w Europie. 50 marek samochodów.

NL Een breed programma, met 550 beschikbare referenties, zorgt voor een dekking van 86% van het Europesche wagenpark en ruim 50 autofabrikanten.

TR Yüksek araç kapsamı için geniş ürün gamı. Sunumda olan 550 parça numarası. Avrupa araç parkında %86 kapsama oranı. Kapsanan 50 araç üreticisi

GR Μια ευρεία γκάμα, που προσφέρει υψηλό ποσοστό κάλυψης. 550 διαθέσιμοι κωδικοί. Κάλυψη του 86% του ευρωπαϊκού πάρκου. Κάλυψη σε πάνω από 50 μάρκες οχημάτων.

FR La pompe à eau Valeo: une gamme essentielle, au cœur du fonctionnement du moteur

DE Valeo Wasserpumpen: ein Kernprodukt für die korrekte Funktion des Motors

IT Pompe acqua Valeo: una gamma essenziale per garantire il buon funzionamento del motore

SP Bombas de Agua Valeo: una gama esencial de productos para el buen funcionamiento del corazón del motor

RU Водяные насосы Valeo: ключевая деталь для добросовесной работы двигателя

PL Pompy wody Valeo, czołowego dostawcy części układu chłodzenia

NL Valeo waterpompen: een essentieel onderdeel voor het goed functioneren van de motor

TR Valeo su pompaları: Motorun kalbi

GR Αντλίες νερού Valeo: μια σημαντική γκάμα, για την σωστή λειτουργία του κινητήρα

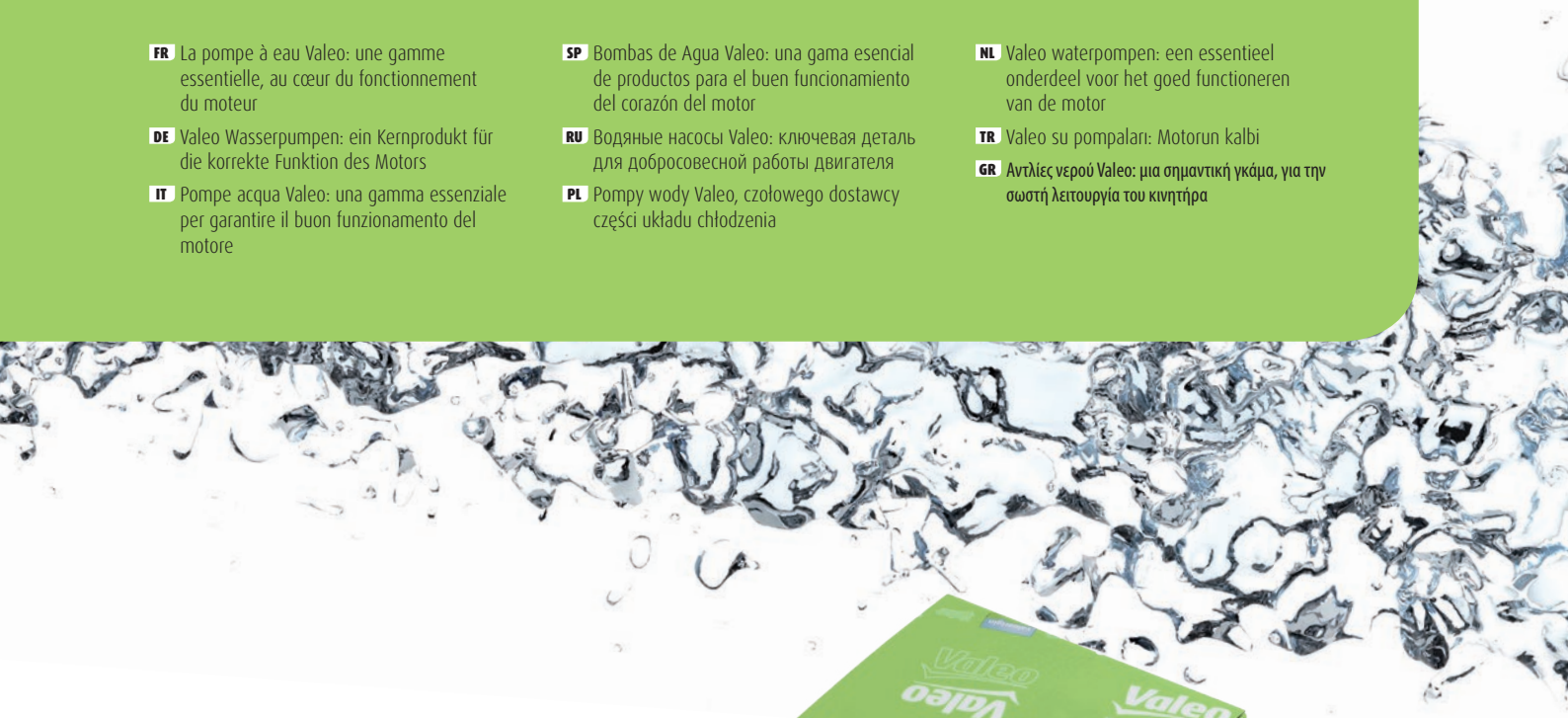

Boost your sales
with the Valeo pack
Full package accessories

*

FR Dynamisez vos ventes avec le pack Valeo. Livré avec un pack d'accessoires complet

DE Kurbeln Sie Ihre Verkäufe mit dem Valeo pack an. vollständiges Zubehör

IT Incrementate le vostre vendite grazie al Valeo pack. Completo di tutti gli accessori necessari

SP Aumente su venta con el pack Valeo. Todos los accesorios incluidos

RU Увеличьте продажи с упаковкой Valeo. Полный ремкомплект

PL Zwięsz swoją sprzedaż dzięki Zestawom Valeo. Pełna oferta akcesoriów i elementów montażowych

NL Geef uw verkopen een extra impuls met het Valeo Pack. Inclusief accessoires

TR Satışlarınızı Valeo ile arttırın. Komple paket aksesuarlar

GR Ενισχύστε τις πωλήσεις σας, με το Valeo PACK. Περιλαμβανομένων όλων των παρελκόμενων

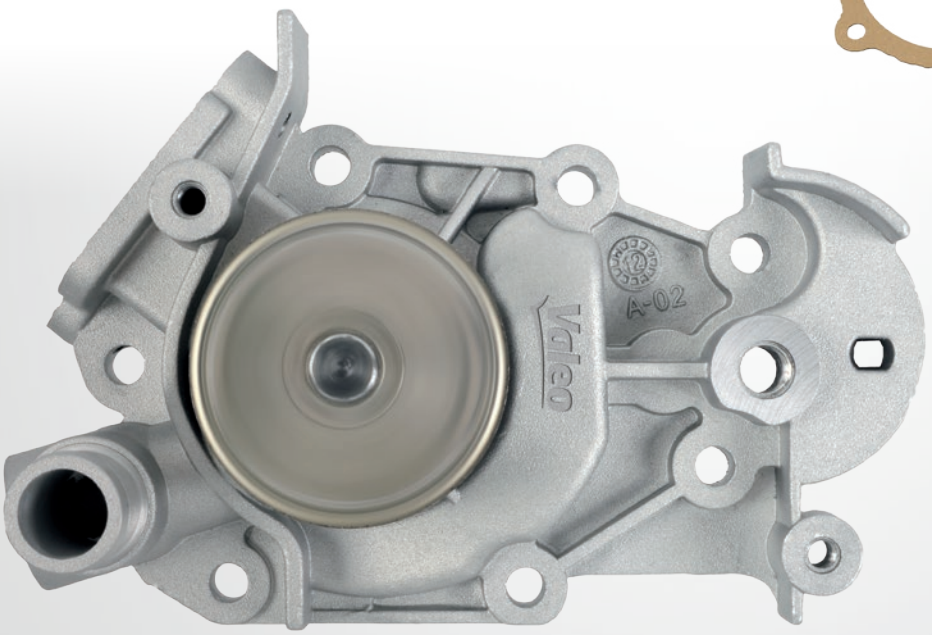

UK *There are several configurations in the range

FR *Une gamme avec plusieurs configurations

DE *Es gibt unterschiedliche Ausführungen im Sortiment

IT *Non tutti i riferimenti possono avere gli accessori, così come indicato nell'immagine

SP *Existen varias configuraciones en la gama

RU *Возможны различные варианты комплетности

PL *Wiele koniugacji w linii

NL *Verschillende configuraties in het assortiment

TR *Farklı parça takım sunumlarıyla

GR *Προσφέρονται διάφοροι συνδυασμοί εξαρτημάτων στην γκάμα

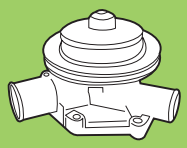

Valeo water pumps

The right choice for a consistent performance and long pump life

Pulley designed to prevent noise and excessive wearing of timing belt

FR Une poulie conçue pour éviter les nuisances sonores et réduire la tension de la courroie.

DE optimales Design der Riemenscheibe zur Vermeidung von Geräuschen und übermäßiger Abnutzung des Zahnriemens.

IT Puleggia progettata per ridurre al minimo la rumorosità e l'eccessivo logoramento del cuscinetto.

SP Polea diseñada para evitar el ruido y sobrecarga de la correa de distribución.

RU Крыльчатка предотвращает шум и чрезмерный износ ремня привода.

PL Koło pasowe zaprojektowane zgodnie ze standardami OE.

NL Het ontwerp van de poelie gaat geluidshinder en overmatige slijtage van de distributieriem tegen.

TR Gürültüyü ve triger kayışındaki aşınmaları en aza indiren özel kasnak tasarımları.

GR Τροχαλία σχεδιασμένη για πρόληψη του θορύβου και μείωση της φθοράς του ιμάντα.

High quality bearing with specific grease to reduce the noise and allow a better resistance to extreme thermal operating conditions

FR Un roulement de grande qualité, fourni avec une graisse spécifique pour réduire les nuisances sonores et permettre une meilleure résistance dans des conditions thermiques extrêmes.

DE Hochqualitatives Lager mit speziellem Schmiermittel zur Geräuschreduzierung und besserem Widerstand bei extremen Temperaturverhältnissen.

IT Elevata qualità del cuscinetto dotato di uno specifico grasso che consente di ridurre la rumorosità e consente una migliore resistenza a condizioni termiche estreme.

SP Rodamientos de alta calidad y con el engrase adecuado para reducir el ruido y permitir una mayor resistencia a condiciones térmicas extremas.

RU Высокое качество подшипников вместе со специальным составом смазки, уменьшают шум и обеспечивают работу в экстремальных условиях

PL Łożysko wysokiej jakości ze specjalnym smarem wpływa na redukcję hałasu oraz poprawia działanie przy ekstremalnie wysokich temperaturach.

NL Hoogwaardig lager met een speciaal smeervet, wat zorgt voor een geluidsarme werking en een hogere weerstand tegen extreme temperaturen..

TR Gürültüyü azaltmak ve aşırı termal koşullara karşı direnç sağlamak için özel olarak yağlanmış yüksek kaliteli yatak.

GR Υψηλής ποιότητας ρουλεμάν, με ειδικό γράσο για την μείωση του θορύβου και καλύτερη αντοχή στις υψηλές θερμοκρασίες.

Controlled casting process to avoid porosity

FR Processus de jets contrôlés afin d'éviter la porosité.

DE Kontrolliertes Gussverfahren zur Vermeidung von Porosität.

IT Controllo del processo di fusione per evitare la produzione di porosità.

SP Proceso de fundición controlada para evitar la porosidad y fugas.

RU Отсутствие пористости метала благодаря контролю качества литья.

PL Kontrolowany proces utwardzania powierzchniowego eliminacja porowatości materiału.

NL Gecontroleerd gietproces, om poreusheid te vermijden.

TR Oluşabilecek gözenekleri önlemeye yönelik kontrollü döküm işlemi.

GR Ελεγχόμενη διαδικασία χύτευσης, για μείωση των πόρων.

Matching the O.E. quality: performance, durability, thermal shock and bearing resistance test.

valeorigin

FR Conforme à l'origine : Performance, durabilité, validation lors des tests de résistance aux chocs thermiques et sur la courroie.

DE OE-gleichwertige Qualität: Tests zu Leistung, Dauerhaftigkeit, Thermischer Schock und Belastung des Lagers.

IT Prodotti di qualità pari all'originale: Performance, durata, resistenza agli shock termici e per una lunga vita del cuscinetto.

SP Igualamos la calidad de la pieza de origen: Para lograrlo realizamos pruebas de gran exigencia en cuanto al redimiento, a su durabilidad, resistencia al choque térmico y para comprobar la resistencia de los rodamientos.

RU Соответствует требованиям по качеству O.E.: Испытания на функциональность, износостойкость, термо перегрузок и устойчивость подшипников.

PL Spełniający standardy O.E.: Wydajność, trwałość, zmiany temperatur oraz test odporności łożysk.

NL Kwaliteit op OE-niveau: Prestaties, duurzaamheid, thermische schokweerstand- en lagersterkte.

NL Orijinal ekipman kalitesi: Performans, dayanıklılık, termal şok ve yatak direnç testleri.

GR Ποιότητα εφάμιλλη της πρώτης τοποθέτησης: Απόδοση, αντοχή, τέστ θερμικών σοκ και διάρκειας ζωής του ρουλεμάν.

FR La pompe à eau Valeo. Le bon choix pour une performance et une durée de vie optimales.

DE Valeo Wasserpumpen. Die richtige Wahl für optimale Leistung und lange Lebensdauer

IT Pompe acqua Valeo. La giusta scelta per ottime performance e lunga durata.

SP Bombas de Agua Valeo. La elección correcta para lograr el mejor rendimiento y una larga vida útil.

RU Водяные насосы Valeo. Правильный выбор для продолжительной работы и длительного срока эксплуатации.

PL Pompy wody Valeo. Wysokiej jakości produkt o dużej wydajności i żywotności.

NL Valeo waterpompen. De juiste keuze voor constante prestaties en een lange levensduur.

TR Valeo su pompaları. Yüksek performans ve uzun ömür için doğru seçim.

GR Αντλίες νερού Valeo. Η σωστή επιλογή για σταθερή απόδοση μεγάλης διαρκείας.

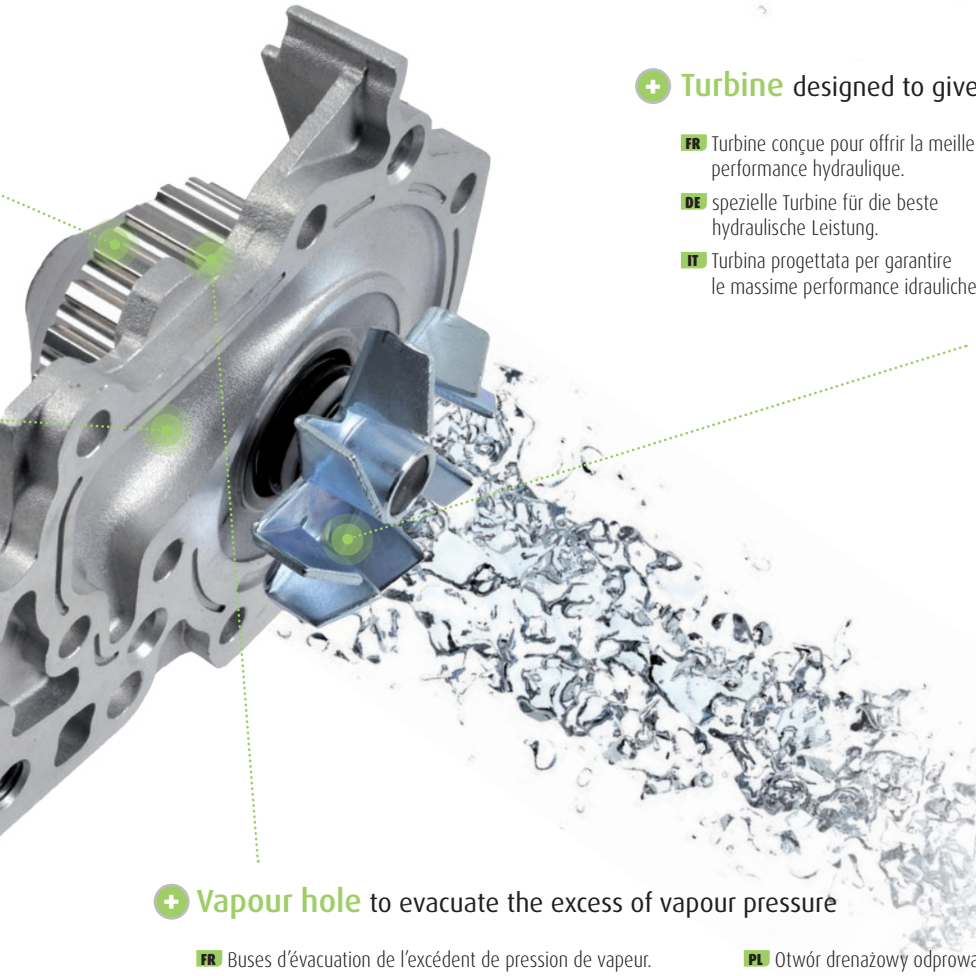

Turbine designed to give the best hydraulic performance

FR Turbine conçue pour offrir la meilleure performance hydraulique.

DE spezielle Turbine für die beste hydraulische Leistung.

IT Turbina progettata per garantire le massime performance idrauliche.

SP Turbina diseñada para proporcionar el mejor rendimiento hidraúlico.

RU Крыльчатка обеспечивает максимально эффективную циркуляцию жидкости.

PL Lepsza wydajność hydrauliczna dzięki turbinowym kształtom wirnika.

NL Rotor ontworpen voor optimale hydraulische prestaties.

TR En iyi hidrolik performansı vermek için tasarlanmış türbin.

GR Σχεδίαση πτερωτής για τη βέλτιστη υδραυλική απόδοση

Vapour hole to evacuate the excess of vapour pressure

FR Buses d'évacuation de l'excédent de pression de vapeur.

DE Dunstöffnungen für das Abführen von übermäßigen Dampfdruck.

IT Cavità per il vapore necessaria ad espellere il vapore in eccesso.

SP Válvula de escape para eliminar el exceso de presión del vapor.

RU Стравливающее отверстие для стравливания избыточного давления.

PL Otwór drenażowy odprowadza nadmiar ciśnienia z łożyska.

NL Luchtopening, om overtollige druk te laten ontsnappen.

TR Aşırı basıncı tahliye eden buhar çıkışları.

GR Θυρίδα εκκένωσης ατμών, για την μείωση την υπερβολικής τους πίεσης.

With an excellent finish to reduce belt wearing and for a longer bearing life.

FR Une finition parfaite pour réduire la tension de la courroie et allonger sa durée de vie.

DE Eine perfekte Ausführung zur Vermeidung von Riemenverschleiß und Erhöhung der Lebensdauer des Lagers.

IT Prodotte con le migliori finiture per ridurre al minimo il logorio della cinghia e per una maggiore durata del cuscinetto.

SP Con un excelente acabado para reducir sobre-esfuerzos de la correa de distribución y para lograr una mayor vida útil de los rodamientos.

RU С высокоточным покрытием для уменьшения износа ремня и для увеличения срока службы опорного механизма.

PL Precyzyjne wykonanie gwarantuje wyższą żywotność łożyska oraz ciche działanie.

NL Met een uitstekende afwerking, minder riemslijtage en een langere levensduur.

TR Kayış aşınmalarını en aza indiren ve uzun yatak ömrü sağlayan mükemmel yüzeyler.

GR Με εξαιρετικό φινίρισμα, για μείωση της φθοράς του ιμάντα και μεγαλύτερη διάρκεια ζωής για το ρουλεμάν.

Protectiv Valeo coolant range

Valeo offers high quality antifreeze concentrated at more than 90% of mono-ethylene glycol.

FR Valeo propose un antigel concentré à plus de 90 % de monoéthylène glycol

SP Valeo ofrece líquidos de refrigeración concentrados de alta calidad con más de 90% de monoetilenglicol

PL Koncentrat płynu chłodniczego Valeo zawiera ponad 90% glikolu etylenowego

GR Η Valeo προσφέρει ένα συμπυκνωμένο ψυκτικό υγρό υψηλής ποιότητας με συγκέντρωση αιθυλενικής γλυκόλης πάνω από 90%.

Concentrated antifreeze

Protectiv 112

Matching Quality[1]

33% 50% 60%

Protectiv 100

Matching Quality[1]

33% 50% 60%

Valeo coolant is a that dissipates heat

FR Le liquide de refroidissement Valeo est un liquide caloporteur qui dissipe la chaleur de la boucle thermale

SP El líquido refrigerante Valeo es un fluido que asegura la conductividad térmica para disipar el calor de un circuito cerrado

Valeo coolant prevents from overheating, corrosion and freezing

Valeo experts recommend to:

- Change your coolant every two years
- Change your coolant if you change engine cooling parts like: thermostat, water pump, radiator and heater core
- Valeo provides its Fastfill® tool for an efficient coolant filling
  Part number 698798

Valeo Protectiv liquid coolants boiling point tests are realized at atmospheric pressure (test method ASTM D1120). Under a pressure above one bar a fluid boiling point increases. Thanks to the higher engine pressure and the effect on boiling point increase, Valeo Protectiv liquid coolants range is adapted to daily situation.

FR *Antigel : Concentré, doit être dilué avec de l'eau déminéralisée
[1] Qualité équivalente

SP *Anticongelante: concentrado para ser diluido con agua desionizada
[1] Calidad equivalente

PL *Płyn przeciw zamarzaniu: koncentrat płynu chłodniczego do rozcieńczania z wodą demineralizowaną.
[1] Jakość równoważna

GR *Αντιψυκτικό: Συμπυκνωμένο, το οποίο μπορεί να διαλυθεί με διονισμένο νερό
[1] Εφάμιλλης ποιότητας

FR Gamme Valeo Protectiv de liquides de refroidissement
SP Gama de líquido refrigerante Valeo Protectiv
PL Gamma płynów chłodniczych Valeo Protectiv
GR Σειρά Αντιψυκτικών της Valeo Protectiv

heat transfer fluid from the thermal circuit

PL Płyn chłodniczy Valeo odprowadza ciepło z obiegu chłodniczego

GR Το αντιψυκτικό υγρό είναι ένα υγρό μεταφοράς της θερμότητας, το οποίο απάγει τη θερμότητα από ένα κλειστό κύκλωμα

FR Le liquide de refroidissement Valeo protège le moteur de la surchauffe, de la corrosion et du gel

SP El líquido refrigerante Valeo previene el sobrecalentamiento, la corrosión y la congelación

PL Płyn chłodniczy Valeo zapobiega przegrzewaniu, korozji oraz zamarzaniu

GR Το αντιψυκτικό υγρό της Valeo προστατεύει το κύκλωμα από υπερθέρμανση, διάβρωση και πάγωμα

Valeo ready-to-use coolant** is a blend of water and antifreeze (mono-ethylene glycol)

FR Le liquide de refroidissement Valeo prêt à l'emploi est un mélange d'eau et d'antigel (monoéthylène glycole)

SP El líquido refrigerante Valeo listo para usar es una mezcla de agua y anticongelante (monoetilenglicol)

PL Gotowy do użycia płyn chłodniczy jest mieszaniną wody oraz glikolu etylenowego

GR Το έτοιμο προς χρήση αντιψυκτικό της Valeo είναι ένα μείγμα ιονισμένου νερού και αντιψυκτικού (αιθ. γλυκόλης)

FR **Les experts Valeo vous recommandent:**
- De changer votre liquide de refroidissement tous les 2 ans
- De changer votre liquide de refroidissement si vous changez l'une des pièces de votre circuit de refroidissement tel que le thermostat, la pompe à eau, le radiateur moteur ou le radiateur de chauffage
- Valeo recommande son outil Fastfill® pour un changement efficace du liquide de refroidissement. P/N 698798

SP **Los expertos de Valeo recomiendan:**
- Cambie el líquido refrigerante cada 2 años
- Cambie el líquido refrigerante al sustituir algún componente del circuito térmico motor: termostato, bomba de agua, radiador y radiador de calefacción
- Utilice la herramienta Valeo Fastfill® (ref. 698798) para el llenado eficiente de líquido refrigerante

PL **Rada specjalisty:**
- Wymieniaj płyn co dwa lata.
- Przy wymianie podzespołów układów silnika takich jak termostat, pompa wody czy chłodnica zawsze wymieniaj płyn chłodniczy
- Aby przyśpieszyć proces wymiany płynu stosuj urządzenie FastFill® (698798)

GR **Οι ειδικοί της Valeo προτείνουν:**
- Αλλάζετε το αντιψυκτικό κάθε δύο χρόνια
- Αλλάξτε το αντιψυκτικό, αν αλλάξετε εξαρτήματα του συστήματος ψύξης του κινητήρα όπως: θερμοστάτη, αντλία νερού, ψυγείο και ψυγείο-καλοριφέρ
- Η Valeo διαθέτει το εργαλείο της Fastfill® για την αποτελεσματική πλήρωση του αντιψυκτικού Κωδικός 698798

FR Les tests du point d'ébullition des liquides de refroidissement Valeo Protectiv sont effectués à pression atmosphérique (méthode de teste ASTMD1120). Sous pression supérieure à un bar, le point d'ébullition d'un liquide augmente. Grâce à la pression supérieur du moteur et l'augmentation du point d'ébullition, la gamme de liquides de refroidissement Valeo Protectiv est adaptée aux situations quotidiennes.

SP Las pruebas de punto de ebullición de líquidos de refrigeración Valeo Protectiv son realizados a presión atmosférica (Método de prueba ASTM D1120). Bajo una presión superior a un bar, el punto de ebullición de un fluido se incrementa. Gracias a la mayor presión del motor y al punto de ebullición aumentado, la gama de líquidos de refrigeración Valeo Protectiv se adapta a cualquier situación de la vida cotidiana.

PL Testy dotyczące punktu wrzenia płynu chłodniczego Valeo Protectiv dokonywane są pod ciśnieniem atmosferycznym (metoda testów ASTMD1120). Punkt wrzenia płynu wzrasta pod ciśnieniem przekraczającym jeden bar. Dzięki zwiększonemu ciśnieniu w silniku oraz podwyższonemu punktowi wrzenia gama płynów do chłodnicy Valeo Protectiv przystosowana jest do każdej codziennej sytuacji.

GR Τα τεστ του σημείου βρασμού των ψυκτικών υγρών Protectiv της Valeo πραγματοποιούνται σε ατμοσφαιρική πίεση (μέθοδος τεστ ASTM D1120). Σε πίεση πάνω από 1 bar το σημείο βρασμού ενός υγρού ανεβαίνει. Χάρη στην υψηλότερη πίεση του κινητήρα και στην αύξηση του σημείου βρασμού, η σειρά ψυκτικών υγρών Valeo Protectiv προσαρμόζεται στις καθημερινές συνθήκες.

Ready-to-use coolants

Protectiv 35
Universal [2]
Protection: from -20°C up to +105°C

Protectiv 40
Matching Quality[1]
Protection: from -25°C up to +106°C

Protectiv 50
Matching Quality[1]
Protection: from -35°C up to +108°C

FR **Liquide de refroidissment prédilué avec de l'eau : prêt à l'emploi
[2] Universel : Liquide de refroidissment de qualité Premium, peut être utilisé pour tout véhicules

SP **Líquido de refrigeración: diluido con agua: listo para usar
[2] Universal: líquido refrigerante de calidad Premium, de uso para todos los vehículos

PL **Płyn przeciw zamarzaniu: gotowy do użycia płyn chłodniczy (bez rozcieńczania)
[2] Produkt uniwersalny możliwość stosowania we wszystkich markach i modelach samochodów z wszystkimi typami chłodnic

GR **Αντιψυκτικό: Διαλύεται με δι-ιονισμένο νερό: έτοιμο προς χρήση
[2] Καθολικό: Υψηλής ποιότητας αντιψυκτικό το οποίο μπορεί να χρησιμοποιηθεί για όλα τα αυτοκίνητα

Valeo thermostat range, allows you to protect your engine and heat exchangers in extreme temperatures conditions

Boost your sales
with the Valeo pack

FR Dynamisez vos ventes avec le pack Valeo
DE Kurbeln Sie Ihre Verkäufe mit dem Valeo pack an
ES Aumente su venta con el pack Valeo
IT Incrementate le vostre vendite grazie al Valeo pack
PL Zwiększ swoją sprzedaż dzięki Zestawom Valeo

UK *There are several configurations in the range
FR *Plusieurs configurations possibles au sein de la gamme
DE *Es gibt verschiedene Ausführungen im Sortiment
ES *Varias configuraciones posibles dentro de la gama
IT *Diverse configurazioni presenti nella gamma
PL *Wiele koniugacji w linii

376
available part numbers

FR 376 références disponibles
DE 376 verfügbare Artikel
ES 376 Referencias disponibles
IT 376 riferimenti disponibili
PL 376 pozycji

O.E.
product

FR Produit de qualité équivalente à la première monte
DE O.E. Produkt
ES Producto de primer equipo
IT Prodotti di qualità O.E.
PL Produkt Oryginalny

+ 50
car makers covered

FR 50 constructeurs automobiles couverts
DE 50 Fahrzeughersteller abgedeckt
ES Con cobertura para 50 constructores de vehículos
IT 50 case automobilistiche coperte da questi riferimenti
PL Pasuje do 50 marek samochodów

FR La gamme de thermostat Valeo vous permet de protéger votre moteur et les échangeurs thermiques dans des conditions de température extrêmes

DE Mit Valeo Thermostaten schützen Sie Ihren Motor und Ihren Wärmetauscher bei extremen Temperaturen

ES La gama de termostatos Valeo le permite proteger su motor e intercambiadores térmicos en condiciones extremas de temperatura

IT I termostati Valeo, consentono al vostro motore e agli scambiatori di calore, di lavorare alle temperature più estreme

PL Termostaty Valeo zapewniają ochronę silnika i wymienników ciepła w niskich i wysokich temperaturach

7 reasons to choose valeo

FR 7 bonnes raisons de choisir Valeo

DE 7 Gründe für Valeo

ES 7 razones por las que elegir Valeo

IT 7 ragioni per scegliere Valeo

PL 7 powodów aby wybrać Valeo

1 Precision of mounting holes location to vehicle interface

FR Précision de la localisation des trous de montage sur le véhicule

DE Präzise Bohrungen für die Befestigung am Motor

ES La precisión en la localización de los orificios mejora el montaje

IT Precisione dei fori di fissaggio per un rapido montaggio

PL Precyzyjne punkty mocowania w samochodzie ułatwiają i przyśpieszają montaż

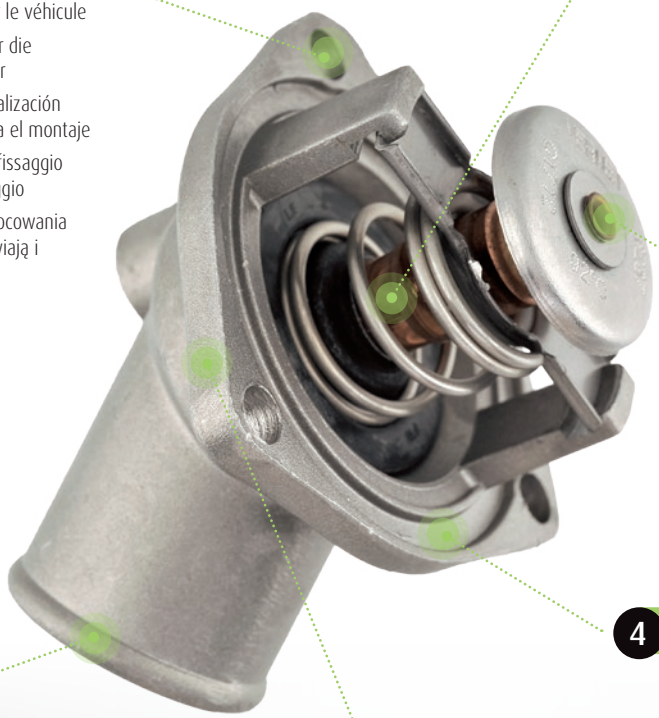

2 High material for severe open-close working cycles

FR Materiau haute qualité pour les cycles sévères d'ouverture et de fermeture

DE Hochfestes Material für schwere Öffnen-Schließen Zyklen.

ES Gran calidad de materiales y de prestaciones para soportar ciclos de apertura y cierre de alta exigencia

IT Materiali di qualità che resistono anche ai più severi cicli di apertura e chiusura

PL Wysokiej jakości materiały wytrzymujące wiele cykli otwierania i zamykania

3 Clear marking of temperature opening

FR Marquage claire de la température d'ouverture

DE Klare Markierung der Öffnungstemperatur

ES Indicación clara de la temperatura de apertura

IT Chiara designazione della temperatura di apertura

PL Wyraźne oznaczenie otworu temperatury

4 High quality surface finishing for gasket fitment

FR Surface de haute qualité pour la pose des joints

DE Hochqualitative Oberflächenbearbeitung für die Dichtungsmontage

ES Acabado de alta calidad en el acabado de las superficies para un acoplamiento perfecto de la junta.

IT Elevati standard qualitativi nella finitura della superficie lavorata per un corretto fissaggio della guarnizione

PL Precyzyjne wykonanie flanszy dla właściwego montażu

5 Controlled casting process to avoid porosity

FR Processus de fonte contrôlée afin d'éviter la porosité

DE Kontrollierter Gießprozess zur Vermeidung von Porosität

ES Proceso de fundición controlado para evitar la presencia de poros

IT Processo di fusione controllato per evitare la presenza di porosità

PL Kontrolowany proces odlewu aluminium zapobiegający porowatości materiału

6 Gripping area for high pressure connector

FR Zone de prise pour une connexion à haute pression

DE Klemmwulst zur Schlauchbefestigung

ES Zona de agarre para conectores de alta presión

IT Area di presa per i connettori ad alta pressione

PL Uchwyty łączące do układów z wysokim ciśnieniem

7 valeorigin

Valeo EGR range, the specialist in development of Air Management System

6 reasons to choose Valeo

FR 6 raisons de choisir Valeo
DE 6 Gründe für Valeo
ES 6 razones para elegir Valeo
IT 6 buoni motivi per scegliere Valeo
PL 6 powodów aby wybrać Valeo

1 Valeo covers all European emission standards **Euro 2 to Euro 6** (pneumatic or electronic)

FR Valeo respecte toutes les normes européennes en termes d'émission, depuis l'Euro2 jusqu'à l'Euro 6 (pneumatique ou électronique)
DE Valeo covers all European emission standards Euro 2 to Euro 6 (pneumatic or electrical)
ES Valeo cubre todos los estándares europeos desde la Euro 2 a la Euro 6 (neumática o electrónica)
IT Valeo rispetta tutti gli standard Europei relativi alle emissioni a partire dall'Euro 2 per arrivare fino all'Euro 6
PL Valeo posiada zawory EGR do wszystkich standardów norm spalin od Euro 2 po Euro 6

Vacuum EGR valve

Electrical valve & EGR cooler

Combined
EGR valve
+
EGR cooler

EGR module

Combined
Air intake manifold
+
Intercooler
+
Air mass throttle
+
EGR Valve

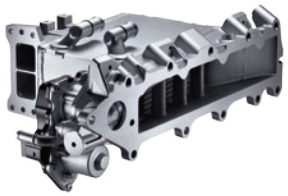

Air Intake Module with EGR Valve

Euro 2 & Euro 3 >1999-2004	Euro 4 >2004-2009	Euro 5 >2009-2014	Euro 6 >2014
FR Vanne EGR à commande pneumatique	FR Vanne électronique et refroidisseur EGR	FR Module EGR (module d'admission d'air avec vanne EGR)	FR Module d'admission d'air avec vanne EGR (Module système d'admission d'air + refroidisseur d'air de suralimentation + collecteur d'air + vanne EGR)
DE AGR Ventil	DE Elektronisches Ventil & AGR Kühler	DE AGR Modul (Luftansaugmodul mit AGR Ventil.)	DE Luftansaugmodul mit AGR Ventil. (Kombination aus Ansaugkrümmer + Ladeluftkühler + Drosselklappe + AGR Ventil)
ES Válvula EGR de vacio	ES Válvula electrónica & refrigerador EGR	ES Módulo EGR (Módulo de gestión de aire con válvula EGR)	ES Módulo de gestión de aire con válvula EGR (Conjunto colector de admisión + intercooler + cuerpo de mariposa + válvula EGR)
IT Valvola EGR	IT Valvola elettronica & EGR di raffreddamento	IT Modulo EGR (Modulo d'aspirazione con valvola EGR)	IT Modulo d'aspirazione con valvola EGR (Manicotto d'aspirazione + intercooler + corpo farfallato+ valvola EGR)
PL Pneumatyczny zawór EGR	PL Elektroniczny zawór EGR & chłodnica spalin	PL Moduł EGR (Układ dolotowy z modułem EGR)	PL Układ dolotowy z modułem EGR (Zintegrowany kolektor dolotowy, zawierający czujnik przepływu powietrza, wodną chłodnicę powietrza doładowanego oraz zawór EGR)

PACE AWARD

2 valeorigin

Valeo EGR range

Valeo is **100% O.E. quality**

FR Valeo, qualité 100% pièce d'origine
DE Valeo ist 100% OE Qualität
ES Valeo es 100% calidad OE
IT Valeo 100% Qualità OE
PL Zawory EGR Valeo są w 100% zgodne z produktem OE

FR La gamme EGR : Valeo, le spécialiste des produits dédiés à la gestion du traitement de l'air

DE Valeo AGR: der Spezialist innerhalb des Air Management Systems

ES Gama EGR Valeo: el especialista en el desarrollo de los sistemas de gestión del aire

IT Gamma Valeo EGR: lo specialista nello sviluppo del Sistema di Gestione dell'Aria

PL Produkty EGR Valeo, specialsty w dziedzinie projektowania układów zarządzania powietrzem

20
years of experiences

3 Valeo has more than **20 years of experience** in developing EGR products

FR Valeo bénéficie de plus de 20 ans d'expérience dans la création de produits EGR

DE Valeo hat mehr als 20 Jahre Erfahrung in der Entwicklung von AGR Produkten

ES Más de 20 años de experiencia en el desarrollo de productos EGR

IT Valeo è presente nel mercato delle valvole EGR da più di 20 anni

PL Valeo posiada 20 letnie doświadczenie w produkcji zaworów EGR

4 Valeo proposes a full range of products, covering **16 car manufacturers**

FR Valeo propose une gamme complète de produits pour 16 constructeurs automobiles

DE Valeo bietet ein vollständiges Sortiment von Produkten, die 16 Fahrzeughersteller abdecken

ES Valeo ofrece una completa gama de productos con cobertura para 16 fabricantes distintos

IT Valeo propone una gamma completa di prodotti per 16 case automobilistiche

PL Valeo proponuje pełną gamę produktów dedykowanych do 16 producentów samochodów

16
car makers covered

PACE AWARD

5 Valeo won the **2013 PACE AWARD**. Valeo products are developed in order to be up to date with the car makers engine innovation

FR En 2013,Valeo a remporté le prix PACE AWARD. Les produits Valeo sont développés pour être en adéquation avec les innovations moteurs des constructeurs

DE Valeo hat den PACE AWARD 2013 gewonnen. Valeo Produkte erfüllen die Bedingungen, die Fahrzeughersteller in die Lage versetzen, innovative Motoren zu entwickeln

ES Valeo ha sido galardonado en 2013 con el PACE AWARD. Los productos Valeo son desarrollados siguiendo las innovaciones del motor del fabricante

IT Valeo ha vinto il PACE AWARD 2013. I prodotti Valeo sono progettati sulla base delle innovazioni tecnologiche dei motori sviluppati dalle case automobilistiche

PL Valeo zostało wyróżnione tytułem PACE AWARD 2013. Produkty posiadają w komplecie części montażowe

6 Valeo products come with **their accessories**

FR Les produits Valeo sont développés avec leurs accessoires

DE Valeo Produkte werden mit Zubehör geliefert

ES Los productos Valeo son desarrollados con sus accesorios

IT I prodotti Valeo vengono venduti completi di accessori

PL Produkty Valeo posiadają w komplecie akcesoria

ACCESSORIES INCLUDED • ACCESSORIES INCLUDED •

UK *There are several configurations in the range

FR *Plusieurs configurations possibles au sein de la gamme

DE *Es gibt verschiedene Ausführungen im Sortiment

ES *Varias configuraciones posibles dentro de la gama

IT *Diverse configurazioni presenti nella gamma

PL *Wiele koniugacji w linii

Valeo EGR products, the solution for reducing CO_2 and NOx emissions

FR La gamme EGR Valeo: la solution de réduction des émissions de gaz CO_2 et d'oxydes d'azote (NOx)

DE Valeo AGR Produkte: die Lösung zur Reduktion von CO_2 und NOx Emissionen

ES Productos EGR Valeo, la solución para reducir la emisión de CO_2 y gases nocivos (NOx)

IT Valeo EGR: la soluzione per ridurre le emissioni di CO_2 e l'emissione dei gas nocivi (NOx)

PL EGR Valeo jest rozwiązaniem redukującym emisję gazów CO_2 oraz (NOx)

Valeo experts recommend you to change your EGR products if any of these symptoms are presented:

FR Les experts Valeo recommandent de changer vos produits EGR dans les cas suivants:

DE Valeo Experten empfehlen den Austausch von AGR Produkten sobald eines der folgenden Symptome auftaucht:

ES Como experto, Valeo recomienda la sustitución de los productos EGR en los siguientes casos:

IT Valeo Expert raccomanda la sostituzione delle valvole EGR qualora uno di questi sintomi si presenti:

PL Valeo zaleca wymianę zaworu EGR w przypadku pojawienia się tych symptomów:

valeo tech centre

See more on www.valeo-techassist.com

FR Pour plus d'informationsn consultez

DE Für weitere Informationen

ES Más información en

IT Per maggiori informazioni, visitate il sito

PL więcej informacji na

Black/white smoke

FR Présence de fumée blanche/noire

DE schwarzer/weißer Rauch

ES Presencia de humo blanco/negro

IT Fumo nero/bianco

PL Biały lub czarny dym z rury wydechowej

Loud noise from the engine

FR Bruit intense du moteur

DE laute Geräusche vom Motor

ES Ruido intenso del motor

IT Rumorosità del motore

PL Głośne odgłosy w komorze silnika dochodzące z okolicy zaworu EGR

Loss of power

FR Perte de puissance

DE mangelnde Beschleunigung

ES Pérdida de potencia

IT Perdita di potenza

PL Utrata mocy

Warning light diagnostic

FR Voyant de tableau de bord en alerte

DE Motorkontrollleuchte

ES Luz de alerta en el tablero

IT Accensione della spia di diagnosi della valvola EGR

PL Komunikat diagnostyczny informujący o problemie z zaworem EGR

Increase of fuel consumption

FR Hausse de la consommation de carburant

DE Mehrverbrauch von Benzin

ES Aumento del consumo de combustible

IT Incremento dei consumi di carburante

PL Zwiększone zużycie paliwa

Loss of performance

FR Perte de performance

DE Leistungsverlust

ES Pérdida de rendimiento

IT Perdita di prestazioni

PL Utrata wydajności

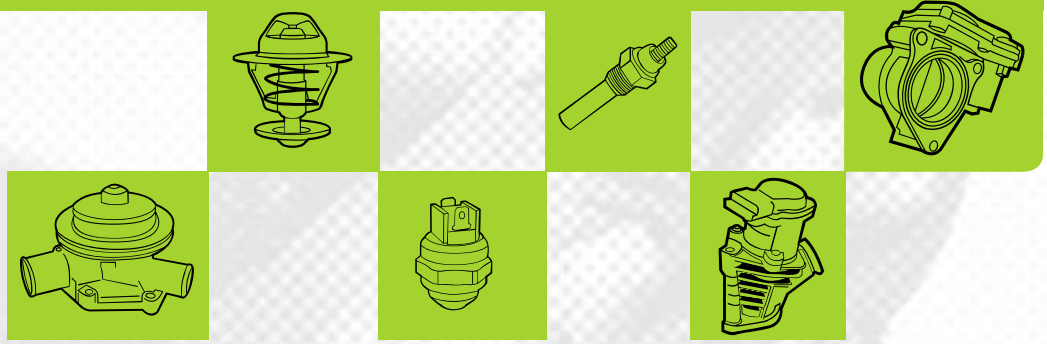

1 → Valeo 7

2 → Valeo 231

3 → Valeo 439

4 → Valeo 567

5 → Valeo 623

6 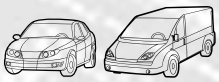 → Valeo 639

7 Valeo → 599

8 OE → Valeo 743

9 IAM → Valeo 767

New = ●

New Nouveau **Nuevo** Novo **Nuovo** Nieuw **Neu** Yeni Новый Νέο

Valeo		
700443	**CITROËN**	C4 Picasso (2006>)
	PEUGEOT	3008
700450	**RENAULT**	Mégane Scénic III
506975	**ALFA ROMEO**	155
506983	**ALFA ROMEO**	MiTo
506867	**AUDI**	A3 (2003>)
506920	**AUDI**	100 (90>94)
506950	**AUDI**	A1
506974	**AUDI**	A1
506803	**CHRYSLER**	300M
506961	**CITROËN**	Jumper (2006>)
506978	**CITROËN**	C5 (2004>2008)
526006	**CITROËN**	C4 Aircross
506993	**DACIA**	Duster (2010>)
506523	**FIAT**	Albea
506935	**HYUNDAI**	Terracan
506976	**HYUNDAI**	Accent (2005>)
506977	**HYUNDAI**	Elantra (2007>)
506827	**LAND ROVER**	Land 110 Series I - II - III
506988	**LAND ROVER**	Discovery (2004>2009)
506973	**MAZDA**	2 (2007>), 3 (2003>2006)
506964	**MERCEDES**	C Class (203) (2004>2008)
506980	**MERCEDES**	C Class (204) (2007>)
506987	**MERCEDES**	C Class (203) Facelift
526005	**MERCEDES**	C Class (203) (2004>2008)
506698	**MITSUBISHI**	Carisma (99>), Space Star
506815	**MITSUBISHI**	Galant V (96>2003)
506698	**NISSAN**	Interstar
		Primastar (2002>2006)
506731	**NISSAN**	Trade
506965	**NISSAN**	Qashqai (2007>2010)
506698	**OPEL**	Movano, Vivaro
506245	**PEUGEOT**	404
506637	**RENAULT**	Espace III (96>2000)
506698	**RENAULT**	Avantime, Clio III
		Laguna II (2005>)
526001	**RENAULT**	Laguna II (2005>)
526010	**RENAULT**	Mégane III
506843	**TOYOTA**	Avensis (2000>2003)
506979	**TOYOTA**	Land Cruiser (2002>)
506982	**TOYOTA**	Auris
506698	**VAUXHALL**	Movano, Vivaro

Valeo		
		(.../...)
700036	**AUDI**	80 (86>95)
700054	**CITROËN**	C3 (2002>)
700055	**CITROËN**	C Crosser
700056	**CITROËN**	Xsara (97>)
700054	**FIAT**	Ducato (2002>2006)
700056	**FIAT**	Ulysse (94>2002)
700036	**FORD**	Galaxy (95>2000)
700046	**FORD**	Ka (96>2008)
	FORD	Puma
700059	**FORD**	Galaxy (95>)
700061	**FORD**	Escort (95>2001)
700055	**LANCIA**	Phedra
700056	**LANCIA**	Zeta
700054	**PEUGEOT**	207
700055	**PEUGEOT**	1007
700056	**PEUGEOT**	106 (91>2003)
700037	**RENAULT**	Safrane
700057	**RENAULT**	Espace III (96>2000)
700060	**RENAULT**	R19
700036	**SEAT**	Alhambra
	VOLKSWAGEN	Corrado
700037	**VOLVO**	V90
820831	**AUDI**	A3 (96>)
820833	**AUDI**	TT (98>2006)
820834	**CITROËN**	Evasion (94>98)
819826	**FIAT**	Croma
820829	**FORD**	Galaxy (95>)
819826	**LANCIA**	Thema
820832	**NISSAN**	Bluebird (T72) (88>90)
820828	**OPEL**	Astra F (91>98)
	OPEL	Astra G (98>2002)
	OPEL	Corsa B (93>2000)
820834	**PEUGEOT**	Expert (95>2003)
820830	**RENAULT**	Espace II (91>96)
820832	**ROVER**	Montego
820831	**SEAT**	Cordoba (2002>)
820833	**SEAT**	Leon
820831	**SKODA**	Fabia II (2007>)
	VOLKSWAGEN	Golf V (2003>)
820833	**VOLKSWAGEN**	Bora
820796	**ALFA ROMEO**	147 (2000>)

New Nouveau **Nuevo** Novo **Nuovo** Nieuw **Neu** Yeni Новый Νέο

Valeo		
	(.../...)	
820568	**CHRYSLER**	Grand Voyager (2001>2008)
820951	**CITROËN**	C3 (2005>), C4, C5
820467	**FIAT**	Punto II (99>2003)
820468	**FIAT**	Punto II (99>)
820797	**FIAT**	Punto (93>99)
820837	**FIAT**	Marea
820564	**FORD**	Focus (98>)
820565	**FORD**	Fiesta (95>)
820793	**FORD**	Ranger (99>)
820951	**FORD**	C-Max, Focus II (2007>)
820955	**HONDA**	Accord VII (98>2003)
820553	**HYUNDAI**	Santa Fé
820568	**JEEP**	Cherokee (2001>2004)
820553	**KIA**	Sportage
820791	**LADA**	Niva
820955	**LAND ROVER**	Freelander (97>)
820951	**MAZDA**	3 (2003>2009)
820768	**MERCEDES**	Transporter 207-410
820776	**MERCEDES**	C Class (202) (93>2001)
820800	**MERCEDES**	E Class (210)
820835	**MERCEDES**	M Class (163)
820568	**MINI**	MINI (2001>)
820553	**MITSUBISHI**	Outlander (2006>)
820771	**MITSUBISHI**	Pajero II (91>99)
820524	**NISSAN**	Sunny (Y10) (90>96)
820553	**NISSAN**	X-Trail (2001>2007)
	OPEL	Signum
820951	**PEUGEOT**	206, 207, 307(2001>2005)
820786	**RENAULT**	Clio III (2005>)
820955	**ROVER**	45 (2004>)
820795	**SKODA**	Octavia (2000>2004)
820781	**SMART**	Fortwo (98>2006)
820767	**SUZUKI**	X90
820773	**TOYOTA**	Cressida II (80>85)
820553	**VAUXHALL**	Vectra (2002>)
820788	**VOLKSWAGEN**	Transporter (F24) (79>92)
819926	**VOLVO**	C70, V40, V90; XC 70 (97>2007)
820836	**VOLVO**	C30, V50, XC 90 (2002>)
820951	**VOLVO**	C30,S40,V50
700451	**CITROËN**	C4, C5, C8
700444	**FORD**	C-Max (CB3), Fiesta (2002>)
700420	**LAND ROVER**	Range Rover Sport (2005>)

Valeo		
	(.../...)	
700421	**LAND ROVER**	Range Rover Sport (2005>)
700422	**LAND ROVER**	Discovery (2004>)
700423	**LAND ROVER**	Range Rover Sport (2005>)
700452	**NISSAN**	Cabstar
700453	**NISSAN**	Murano II (Z51)
700449	**NISSAN**	Qashqai
700451	**PEUGEOT**	308, 3008, 508, 5008
700449	**RENAULT**	Scénic III (2012>)
700447	**SUZUKI**	Grand Vitara
700448	**VOLKSWAGEN**	Amarok, Crafter

WATER PUMP

POMPE À EAU / BOMBA DE AGUA / POMPA ACQUA / WASSERPUMPE

VALEO PRODUCT CHARACTERISTICS

Caractéristiques du produit Valeo / Características del producto Valeo / Caratteristiche del prodotto Valeo / Valeo Produktmerkmale

BELT DRIVEN WATER PUMP

Pompe à eau entraînée par courroie / Bomba de agua de transmisión por correa / Pompa acqua trasmissione a cinghia / Riemengetriebene Wasserpumpe

PULLEY

Poulie / Polea / Puleggia / Rolle

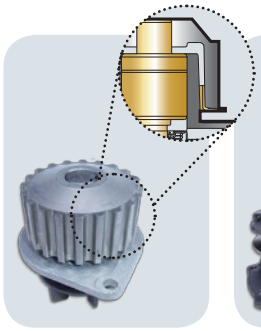

Toothed pulley [CR]

- FR Poulie Crantée [CR]
- SP Polea dentada [CR]
- IT Puleggia dentata [CR]
- DE Zahnriemenscheibe [R]

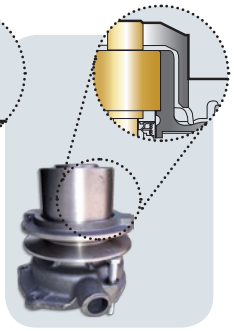

Smooth pulley [SS]

- FR Poulie lisse [SS]
- SP Polea lisa [SS]
- IT Puleggia liscia [SS]
- DE Glatte Riemenscheibe [SS]

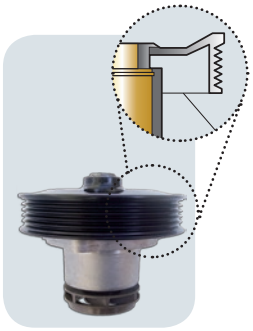

V and multi-v pulley [V/vvv]

- FR Poulie V et multi-v [V/vvv]
- SP Polea V y multi-v [V/vvv]
- IT Puleggia V et multi-v [V/vvv]
- DE Profil-Typ V und multi-v [V/vvv]

HUB

Raccord / Plato / Mozzo / Nabe

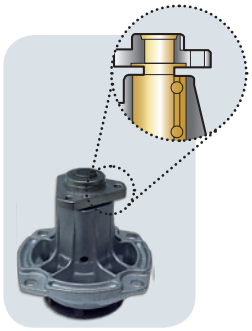

Profile hub type [N]

- FR Profil de type raccord [N]
- SP Perfil de tipo plato [N]
- IT Profilo di tipo hub [N]
- DE Profil-Typ Nabe [N]

CHAIN DRIVEN WATER PUMP

Pompe à eau entraînée par chaîne / Bomba de agua de transmisión por cadena / Pompa acqua trasmissione a cinghia / Kettengetriebene Wasserpumpe

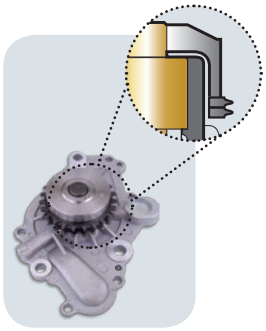

Gear Chain [G]

- FR Pignon de chaîne [G]
- SP Piñón cadena [G]
- IT Pignone catena [G]
- DE Kettenrad [G]

POSITION IN VEHICLE

Position dans le véhicule / Posición en vehículo / Posizione nel veicolo / Position Im Fahrzeug

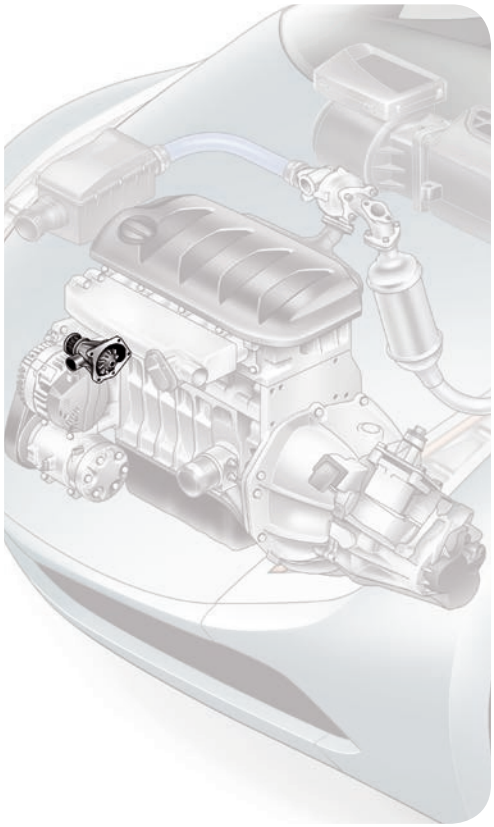

- EN The water pump is mounted on the engine block at the distribution driving system side
- FR La pompe à eau est montée sur le bloc moteur, à côté du système de distribution
- SP La bomba de agua va montada en el monoblock del motor en el lado del sistema de distribución
- IT La pompa dell'acqua è montata sul blocco motore, accanto al sistema di distribuzione
- DE Die Wasserpumpe ist am Motorblock angebracht, auf der Seite der Ventilsteuerung

INTERFACE

Interface / Interfaz / Interfaccia / Schnittstelle

COOLANT SIDE IMPELLER

- FR Turbine du côté du liquide de refroidissement
- SP Turbina del líquido refrigerante
- IT Turbina nel lato del liquido refrigerante
- DE Turbine auf der Seite der Kühlflüssigkeit

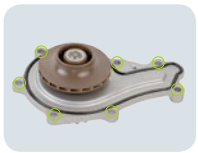

MOUNTING HOLES TO ENGINE

- FR Trous de fixation au moteur
- SP Puntos de montaje hacia el motor
- IT Fori di montaggio per lato motore
- DE Befestigungsbohrungen auf der Motorseite

ACCESSORIES

OF PRODUCT FOR MOUNTING*

Accessoires de produit pour le montage* / Accesorios del producto para el montaje* / Accessori del prodotto per il montaggio* / Zubehör für den Einbau des Produkts*

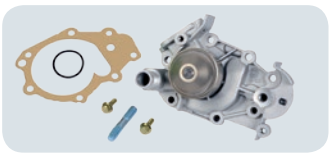

- EN * There are several configurations in the range
- FR * Il existe plusieurs configurations dans l'offre
- SP * Existen varias configuraciones en la gama
- IT * Non tutti i riferimenti possono avere gli accessori, così come indicato nell'immagine
- DE * Mehrere Konfigurationen Werden Angeboten

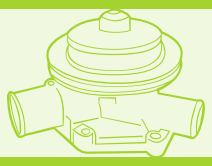

1

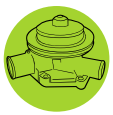

		Type Ctr.	cc					OE	Valeo			
ABARTH												
Grande Punto												
1.4 16V		E	1368	199A8.000	M	N		09/07 ▸ 06/08	55204538	**506967**	CR	
Nuova 500												
1.4 TB 16V ▸C12840		E	1368	312A1.000	M	N		08/08 ▸	55204538	**506967**	CR	
Punto Evo												
1.4 TB 16V		E	1368	955A8.000	M	N		05/10 ▸	55221397	**506967**	CR	
ALFA ROMEO												
33 (83>89)												
1200	*905A*	E	1189	AR30500	M	Y		08/83 ▸ 07/89	60624553	**506036**	N	
1.3 AS,1.3 DC	*905A1*	E	1351	AR30502, AR30168, AR30512 AS30587, AS30168, AS30568	M	Y		08/83 ▸ 07/89	60624553	**506036**	N	
1.5,1.5 AS,1.5 DC,1.5 i	*905A2*	E	1490	AR30146, AR30514, AR30520 AR30504, AR30526, AR30182 AS30508	M	Y		08/83 ▸ 07/89	60624553	**506036**	N	
1.7 i,1.7 ie	*905/A3/A4*	E	1712	AS30558, AS30550, AR30558 AR30550	M	Y		09/86 ▸ 07/89	60624553	**506036**	N	
1.8 TD	*905A4*	D	1779	VM82A	M	Y		09/86 ▸ 07/89	60562567	**506673**	N	506281
33 (89>94)												
1.2	*907A4*	E	1186	AR30743	M	Y		08/89 ▸ 09/94	60624553	**506036**	N	
1.3,1.3 ie,1.4 ie	*907/A3/B3*	E	1351	AR30755, AR30732	M	Y		08/89 ▸ 09/94	60624553	**506036**	N	
1.5,1.5 ie	*907/A2/B2*	E	1490	AR30751, AR30734, AR30750	M	Y		08/89 ▸ 09/94	60624553	**506036**	N	
1.7 i 16V,1.7 ie	*907/A1/AB/B1*	E	1712	AR30736, AR30746, AR30737 AR30747, AR60746	M	Y		08/89 ▸ 09/94	60624553	**506036**	N	
75												
2.0 TD ▸00015349	*162/BD/BG*	D	1995	VM80A	M	Y		02/86 ▸	60561806	**506285**	N	
2.4 TD	*162B5*	D	2393	VM81A	M	Y		09/88 ▸ 1993	60561806	**506285**	N	
90												
2.4 TD,2400 TD	*162A3*	D	2393	VM81A	M	Y		09/84 ▸ 1988	60533508	**506285**	N	
145												
1.3 i	*930A3*	E	1351	AR33501	M	Y		09/94 ▸ 12/96	60624553	**506036**	N	
1.4 i Twin Spark 16V	*930A3*	E	1370	AR33503	M	Y		12/96 ▸ 06/01	60586222	**506518**	SS	
1.6 i	*930A2*	E	1596	AR33201	M	Y		09/94 ▸ 12/96	60624553	**506036**	N	
1.6 i Twin Spark 16V	*930A2*	E	1598	AR67601, AR32102	M	Y		12/96 ▸ 06/01	60608898	**506525**	SS	
1.7 i 16V	*930A1*	E	1712	AR33401	M	Y		09/94 ▸ 12/96	60624553	**506036**	N	
1.8 i Twin Spark 16V 1.8 i Twin Spark AGV 16V	*930A1*	E	1747	AR32201, AR67199, AR67106	M	Y		12/96 ▸ 06/01	60586222	**506518**	SS	
2.0 i 16V,2.0 i AGV 16V	*930A5*	E	1970	AR67299, AR32301, AR67204	M	Y		12/96 ▸ 06/01	60586222	**506518**	SS	
1.9 JTD	*930A4*	D	1910	AR32302	M	Y		03/99 ▸ 06/01	46515970	**506590**	SS	
1.9 TD	*930A4*	D	1929	AR33601, AR67501	M	Y		09/94 ▸ 03/99	60812262	**506560**	V+vv	506722
146												
1.3 i	*930B3*	E	1351	AR33501	M	Y		12/94 ▸ 12/96	60624553	**506036**	N	
1.4 i Twin Spark 16V	*930B3*	E	1370	AR33503	M	Y		12/96 ▸ 02/98	60586222	**506518**	SS	
1.6 i	*930B2*	E	1596	AR33201	M	Y		12/94 ▸ 12/96	60624553	**506036**	N	
1.6 i Twin Spark 16V	*930B2*	E	1598	AR67601	M	Y		12/96 ▸ 06/01	60608898	**506525**	SS	
1.7 i 16V	*930B1*	E	1712	AR33401	M	Y		12/94 ▸ 12/96	60624553	**506036**	N	
1.8 i Twin Spark 16V 1.8 i Twin Spark AGV 16V	*930B1*	E	1747	AR32201, AR67106	M	Y		12/96 ▸ 06/01	60586222	**506518**	SS	
2.0 i 16V 2.0 i Twin Spark AGV 16V	*930B5*	E	1970	AR32301, AR67204	M	Y		12/96 ▸ 06/01	60586222	**506518**	SS	
1.9 JTD	*930B4*	D	1910	AR32302	M	Y		03/99 ▸ 06/01	46515970	**506590**	SS	
1.9 TDs	*930B4*	D	1929	AR33601, AR67501	M	Y		12/94 ▸ 06/01	60812262	**506560**	V+vv	506722
147 (2000>2004)												
1.6 i Twin Spark 16V	*937/AX/BX*	E	1598	AR37203, AR32104	M	Y		10/00 ▸	60586222	**506518**	SS	

• **New** Nouveau **Nuevo** Novo **Nuovo** Nieuw **Neu** Yeni Новый Nou

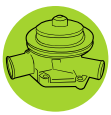

		Type Ctr.		cc					OE	Valeo		
ALFA ROMEO (.../...)												
147 (2000>2004) (.../...)												
2.0 i Twin Spark 16V	*937/AX/BX*	E	1970	AR32310	M	Y		10/00 ▸	60586222	**506518**	SS	
1.9 JTD	*937/AX/BX*	D	1910	182B9.000, 937A2.000	M	Y		10/00 ▸ 09/04	46515970	**506590**	SS	
1.9 JTD 16V	*937/AX/BX*	D	1910	937A4.000, 192B1.000	M	Y		12/02 ▸	46804051	**506808**	SS	
147 (2004>)												
1.6 i Twin Spark 16V	*937/AX/BX*	E	1598	AR32104, AR37203	M	Y		10/04 ▸	60586222	**506518**	SS	
2.0 i Twin Spark 16V	*937/AX/BX*	E	1970	AR32310	M	Y		10/04 ▸	60586222	**506518**	SS	
1.9 JTD,1.9 JTDM	*937/AX/BX*	D	1910	939A7.000, 182B9.000 937A2.000	M	Y		10/04 ▸	46515970	**506590**	SS	
1.9 JTD,1.9 JTD 16V 1.9 JTDM	*937/AX/BX*	D	1910	192B1.000, 937A5.000 937A4.000, 192A5.000	M	Y		10/04 ▸	46804051	**506808**	SS	
155												
1.6 i Twin Spark 16V	*167A6*	E	1598	AR67601	M	Y		04/96 ▸ 08/97	60608898	**506525**	SS	
1.7 i Twin Spark 16V	*167A4*	E	1747	AR67106	M	Y		04/96 ▸ 08/97	60586222	**506518**	SS	
1.7 i Twin Spark	*167A4*	E	1749	AR67105, AR67103	M	Y		11/91 ▸ 08/97	60597487	**506286**	N	
1.8 i Twin Spark	*167A4*	E	1773	AR67102, AR67101	M	Y		11/91 ▸ 03/95	60597487	**506286**	N	
2.0 i Twin Spark 16V	*167A2*	E	1970	AR67299, AR67204	M	Y		03/95 ▸ 08/97	60586222	**506518**	SS	
2.0 i Turbo	*167A2*	E	1995	AR67203	M	Y		11/91 ▸ 08/97	60810426	**506335**	N	
2.0 i Turbo	*167A2*	E	1995	AR67203	M	Y		11/91 ▸ 08/97	71737965	▲**506975**	N	
2.0 i Twin Spark	*167A2*	E	1995	AR67202, AR67201	M	Y		11/91 ▸ 03/95	60597487	**506286**	N	
2.5 i V6	*167A1*	E	2492	AR67302, AR67303, AR67301	M	Y		10/92 ▸ 12/97	60579797	**506479**	V	
1.9 TD	*167A3*	D	1929	AR67501, AR33601	M	Y		07/93 ▸ 08/97	60812263	**506559**	N	506723
2.5 TD	*167A1*	D	2500	VM31B, VM07B	M	Y		07/93 ▸ 08/97	60778982	**506692**	N	506589
156 (97>2003)												
1.6 i Twin Spark 16V	*932/A4/B4*	E	1598	AR32104, AR32103	M	Y		09/00 ▸	60586222	**506518**	SS	
1.6 i Twin Spark 16V	*932A4*	E	1598	AR67601, AR32102	M	Y		09/97 ▸ 03/03	60608898	**506525**	SS	
1.8 i Twin Spark 16V	*932/A3/B3*	E	1747	AR32205	M	Y		09/00 ▸ 03/03	60608898	**506525**	SS	
1.8 i Twin Spark 16V	*932A3*	E	1747	AR32201	M	Y		09/97 ▸	60586222	**506518**	SS	
2.0 JTS 16V 2.0 i Twin Spark 16V	*932/A2/AX/B2/BX*	E	1970	AR32310, AR32301, 937A1.000	M	Y		09/97 ▸	60586222	**506518**	SS	
1.9 JTD	*932/A/A2/B2*	D	1910	AR32302, AR37101, 937A2.000	M	Y		09/00 ▸ 03/03	60815559	**506590**	SS	
1.9 JTD 16V	*932/AX/BX*	D	1910	192B1.000	M	Y		11/02 ▸ 03/03	46804051	**506808**	SS	
2.4 JTD,2.4 JTD 10V	*932/A/A1/AX/B1/BX*	D	2387	AR32501, 839A6.000, 841C.000	M	Y		09/97 ▸ 03/03	60815559	**506590**	SS	
156 (2003>)												
1.6 i Twin Spark 16V	*932/A4/B4*	E	1598	AR32104	M	Y		04/03 ▸	60586222	**506518**	SS	
1.8 i Twin Spark 16V	*932/A3/B3*	E	1747	AR32205	M	Y		04/03 ▸	60608898	**506525**	SS	
2.0 JTS 16V 2.0 JTS TwinSpark 16V 2.0 i Twin Spark 16V	*932/A2/AX/B2/BX*	E	1970	AR32310, 932A2.000, 937A1.000	M	Y		04/03 ▸	60586222	**506518**	SS	
1.9 JTD,1.9 JTD 16V	*932/AX/BX*	D	1910	937A4.000, 192B1.000 192A5.000, 937A5.000	M	Y		04/03 ▸	46804051	**506808**	SS	
1.9 JTD	*932/A2/B2*	D	1910	937A2.000	M	Y		04/03 ▸	46515970	**506590**	SS	
2.4 JTD 10V,2.4 JTD 20V	*932/AX/BX*	D	2387	841M.000, 841C.000	M	Y		04/03 ▸	60815559	**506590**	SS	
2.4 JTD 20V	*932/AX/BX*	D	2387	841G.000	M	Y		04/03 ▸	46804051	**506808**	SS	
159												
1.8 MPi 16V	*939/AX/BX*	E	1796	939A4.000	M	Y		07/05 ▸	71741078	**506866**	N	
1.9 JTS 16V	*939/AX/BX*	E	1859	939A6.000	M	Y		07/05 ▸	71739401	**506839**	N	
2.2 JTS 16V	*939/AX/BX*	E	2198	939A5.000	M	Y		07/05 ▸	71739401	**506839**	N	
3.2 JTS 24V	*939/AX/BX*	E	3196	939A.000	M	Y		12/05 ▸	71741078	**506866**	N	
1.9 JTDM 16V	*939/AX/BX*	D	1910	937A8.000	M	Y		07/05 ▸	46804051	**506808**	SS	
1.9 JTDM 16V,1.9 JTDM 8V	*939/AX/BX*	D	1910	939A1.000, 937A7.000 939A2.000	M	Y		07/05 ▸	46515970	**506590**	SS	
1.9 JTDM 16V	*939AX*	D	1910	937A8.000	A	Y		07/05 ▸	46804051	**506808**	SS	
1.9 JTDM 16V	*939/AX/BX*	D	1910	939A2.000	A	Y		07/05 ▸	46515970	**506590**	SS	
2.4 JTDM 20V	*939/AX/BX*	D	2387	939A3.000	M	Y		07/05 ▸	46804051	**506808**	SS	
2.4 JTDM 20V	*939/AX/BX*	D	2387	939A3.000	A	Y		07/05 ▸	46804051	**506808**	SS	
164 (87>92)												
2.0 i Twin Spark	*164A2*	E	1962	AR06420, AR06416	M	Y		07/87 ▸ 09/92	60565229	**506102**	N	

• **New** Nouveau **Nuevo** Novo **Nuovo** Nieuw **Neu** Yeni Новый Nou

Type Ctr.		cc						OE	Valeo		
ALFA ROMEO (.../...)											
164 (87>92) (.../...)											
2.0 Turbo *164A2*	E	1995	AR06476	M	Y		07/87 ▸ 09/92	60800169	**506134**	N	
2.0 V6 Turbo *164A2*	E	1997	AR64102, AR64101	M	Y		10/90 ▸ 09/92	60555347	**506101**	N	
3.0 i V6 *164/A/AB/AD/AG/AH/AX*	E	2959	AR64301, AR06410, AR06412	M	Y		07/87 ▸ 09/92	60564048	**506101**	N	
3.0 i V6 *164/AB/AM*	E	2959	AR06412	A	Y		07/87 ▸ 09/92	60555347	**506101**	N	
2.5 TD *164A1*	D	2500	VM84A	M	Y		07/87 ▸ 09/92	60562567	**506673**	N	506281
164 (92>98)											
2.0 i Twin Spark *164H3*	E	1962	AR64103	M	Y		09/92 ▸ 09/98	60597487	**506286**	N	
3.0 i V6 *164H1*	E	2959	AR64305	M	Y		09/92 ▸ 09/98	60555347	**506101**	N	
3.0 i V6 *164H1*	E	2959	AR64305	A	Y		09/92 ▸ 09/98	60555347	**506101**	N	
2.5 TD *164/H2/K2*	D	2500	VM08B, VM32B	M	Y		09/92 ▸ 09/98	60778983	**506692**	N	506589
2.5 TD *164/H2/K2* ▸ 0012320	D	2500	VM08B	M	Y		09/92 ▸	60562567	**506673**	N	506281
166 (98>2003)											
2.0 i Twin Spark 16V *936A3*	E	1970	AR34103	M	Y		10/98 ▸	60586222	**506518**	SS	
2.4 JTD,2.4 JTD 10V *936/A2/AX*	D	2387	AR34202, 841C.000	M	Y		02/02 ▸	60815559	**506590**	SS	
166 (2003>)											
2.0 i Twin Spark 16V *936A3*	E	1970	AR36301	M	Y		10/03 ▸	60586222	**506518**	SS	
2.4 JTD 10V *936/A3/AX*	D	2387	841C.000	M	Y		10/03 ▸	46515970	**506590**	SS	
2.4 JTD 20V *936AX*	D	2387	841M.000, 841G.000	M	Y		10/03 ▸	46804051	**506808**	SS	
2.4 JTD 20V *936AX*	D	2387	841H.000, 841N.000	A	Y		10/03 ▸	46804051	**506808**	SS	
Alfasud											
1.2 *901/D4/D5*	E	1186	AS30104, AS30102	M	Y		01/80 ▸	60624553	**506036**	N	
1.2,1200 *901/A/A2/C/C3/D/D1/D2/D3 D4, 904/A/A1/A2/A3*	E	1186	AS30104, AS30111, AS30102 AS30110, AS30100		Y		1976 ▸	60624553	**506036**	N	
1.3,1300 *901/F/G1, 904B, 902/A/A2*	E	1286	AS30184, AS30180, AS30190		Y		09/76 ▸ 07/79	60624553	**506036**	N	
1.35,1.35 i *901/F3/G4*	E	1351	AS30164, AS30168	M	Y		01/80 ▸	60624553	**506036**	N	
1.35,1.35 i,1350 *901/F2/F3/G2/G4, 904B2 902/04/05*	E	1351	AS30168, AS30164, AS30160 AS30156		Y		09/78 ▸	60624553	**506036**	N	
1.5,1.5 i *901/F4/G5*	E	1490	AS30124, AS30128, AS30133	M	Y		01/80 ▸	60624553	**506036**	N	
1.5,1.5 i,1500 *901/F1/F4/G1/G5, 902/02 03*	E	1490	AS30124, AS30128, AS30198 AS30133, AS30126, AS30146		Y		12/78 ▸	60624553	**506036**	N	
Arna											
1.2 *920/A/AA*	E	1186	AR31000	M	Y		09/83 ▸ 12/84	60624553	**506036**	N	
1.2 *920/AB/AC*	E	1189	AR30500	M	Y		11/84 ▸ 1987	60624553	**506036**	N	
1.3 *920A1*	E	1351	AR30512, AR31010, AR31006	M	Y		09/83 ▸ 1987	60624553	**506036**	N	
1.5 *920*		-		M	Y		09/83 ▸ 1987	60624553	**506036**	N	
Brera											
2.2 JTS 16V *939DX*	E	2198	939A5.000	M	Y		01/06 ▸	71739401	**506839**	N	
3.2 JTS V6 24V *939DX*	E	3196	939A.000	M	Y		01/06 ▸	71741078	**506866**	N	
2.4 JTDM 20V *939DX*	D	2387	939A3.000	M	Y		01/06 ▸	46804051	**506808**	SS	
Giulietta											
1.4 T-Jet GPL 16V	F	1368	198A4.000	M	N		11/11 ▸	55221397	**506967**	CR	
1.4 T-Jet 16V *940FX*	E	1368	198A4,940A2/A6/.000	M	N		06/10 ▸	55221397	**506967**	CR	
1.4 TB 16V	E	1368	940A2.000	A	N		06/10 ▸	55221397	**506967**	CR	
2.0 TD *11352, 116A2*	D	1995	VM4HT/2	M	Y		07/81 ▸ 1986	60533508	**506285**	N	
GT											
1.8 i Twinspark 16V *937CX*	E	1747	AR32205	M	Y		01/04 ▸	60608898	**506525**	SS	
2.0 JTS 16V *937/CH/CX*	E	1970	932A2.000, 937A1.000	M	Y		09/03 ▸	60586222	**506518**	SS	
1.9 JTD 16V *937CX*	D	1910	937A5.000	M	Y		09/03 ▸	46804051	**506808**	SS	
GTV (95>2003)											
1.8 i Twin Spark 16V *916C3*	E	1747	AR32201	M	Y		05/98 ▸ 02/03	60586222	**506518**	SS	
2.0 Twin Spark AGV 16V *916C2* 2.0 i Twin Spark 16V	E	1970	AR32301, AR16201, AR32310	M	Y		03/95 ▸	60586222	**506518**	SS	
2.0 V6 Turbo *916C2*	E	1997	AR16202	M	Y		06/95 ▸	60579797	**506479**	V	

• **New** Nouveau **Nuevo** Novo **Nuovo** Nieuw **Neu** Yeni Новый Nou

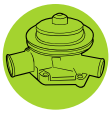

		Type Ctr.		cc					OE	Valeo		
ALFA ROMEO (.../...)												
GTV (95>2003) (.../...)												
3.0 i V6 24V	*916C1*	E	2959	AR16102, AR16105	M	Y		10/96 ▸ 10/00	60579797	**506479**	V	
GTV (2003>)												
2.0 JTS 16V 2.0 i Twin Spark 16V	*916/CX/S2*	E	1970	AR32310, 937A1.000	M	Y		03/03 ▸	60586222	**506518**	SS	
MiTo												
1.4 T-jet GPL 16V	*955AX*	F	1368	198A4.000	M	N		01/10 ▸	55221397	**506967**	CR	
1.4 MPI	*955AX, 145/7X/AX*	E	1368	198A1/A4/A6.000, 199A6/A8/.000	M	N		04/08 ▸	55221397	**506967**	CR	
1.4 TB 16V	*955AX*	E	1368	955A2.000,955A7.000	A	N		01/10 ▸	55221397	**506967**	CR	
1.4 MPI 16V,1.4 MPI 95 16V		E	1368	199A6.000	M	Y		10/09 ▸	46815125	●**506983**	V	
1.3 JTDm 16V	*955AX*	D	1248	199B1.000,199B4.000	M	N		07/10 ▸	55221397	**506967**	CR	
1.3 JTDm 16V	*955AX*	D	1248	199A3.000/F,199B1.000,199B4.000	M	Y		12/08 ▸	46815125	●**506983**	V	
1.6 JTDm 16V	*955AX*	D	1598	955A3.000	M	N		07/10 ▸	55221397	**506967**	CR	
Spider (95>2003)												
1.8 i Twin Spark 16V	*916S3*	E	1747	AR32201	M	Y		02/95 ▸	60586222	**506518**	SS	
2.0 i Twin Spark 16V	*916S2*	E	1970	AR16201, AR32310, AR32301	M	Y		02/95 ▸	60586222	**506518**	SS	
3.0 i V6,3.0 i V6 24V	*916S1*	E	2959	AR16101, AR16199, AR16105	M	Y		06/95 ▸	60579797	**506479**	V	
Spider (2003>2006)												
2.0 JTS 16V 2.0 i Twin Spark 16V	*916S*	E	1970	937A1.000, AR32310	M	Y		03/03 ▸	60586222	**506518**	SS	
Spider (2006>)												
2.2 JTS Twin Spark 16V	*939EX*	E	2198	939A5.000	M	Y		03/06 ▸	71739401	**506839**	N	
3.2 i V6 24V	*939EX*	E	3196	939A.000	M	Y		03/06 ▸	71741078	**506866**	N	
Sprint												
1.35	*902A4*	E	1351	AS30168	M	Y		01/80 ▸ 1988	60624553	**506036**	N	
1.35	*902A4*	E	1351	AS30168		Y		1984 ▸	60624553	**506036**	N	
1.5	*902A5*	E	1490	AS30128, AS30133	M	Y		01/80 ▸ 1988	60624553	**506036**	N	
1.5,1500,1500 i	*902A5*	E	1490	AR30146, AS30128, AS30126 AR30182, AR30520, AR30198		Y		07/79 ▸	60624553	**506036**	N	
1.7 i,1.7 ie	*902A6*	E	1712	AR30550, AR30558		Y		04/88 ▸	60624553	**506036**	N	
ALFA ROMEO												
AR6												
1.9 D	*AR6*	D	1929	160D.100	M	Y		04/85 ▸ 12/89	71737976	**506293**	N	
AUDI												
50												
1.1	*863/1/2*	E	1093	HD, HB, HC	M	Y		08/74 ▸ 07/78	052121005AX	**506013**	CR	
1.3	*8632*	E	1272	HH	M	Y		08/77 ▸ 07/78	052121005AX	**506013**	CR	
80 (72>81)												
1.3		E	1272	ZA, ZF	M	Y		05/72 ▸ 07/78	068121010	**506227**	N	506066
1.3		E	1272	FY, FZ	M	Y		09/78 ▸ 07/81	052121005AX	**506013**	CR	
1.3		E	1272	FZ	M	Y		09/78 ▸ 07/81	026121010C	**506667**	N	506666
1.5		E	1471	ZB, ZC	M	Y		03/73 ▸ 08/75	052121005AX	**506013**	CR	
1.5		E	1471	ZB, ZC	M	Y		03/73 ▸ 08/75	026121010C	**506667**	N	506666
1.5		E	1471	YJ	M	Y		09/74 ▸ 08/75	055121010X	**506227**	N	506066
1.6,1.6 i B149001 ▸	*8112, 8122*	E	1588	YP, YZ, YS, YN, WP, YY, WY YK, YT, YH	M	Y		09/75 ▸ 12/82	037121010C	**506667**	N	506666
1.6,1.6 i		E	1588	YP, YN, YH, YT, WY, WZ, YY WP	A	Y		07/75 ▸ 07/81	026121010DX	**506227**	N	506066
1.6,1.6 i 81-B-149 001 ▸		E	1588	YH, YN, WP, YY, WZ, YT, WY YP	A	Y		07/75 ▸ 07/81	037121010C	**506667**	N	506666

• **New** Nouveau **Nuevo** Novo **Nuovo** Nieuw **Neu** Yeni Новый Nou

Type Ctr.	cc					OE	Valeo		
AUDI (.../...)									
80 (72>81) (.../...)									
1.6,1.6 i ▸81-B-149 000	E	1588	YN, YT, YP, YY, YG, YH, WY WP, YK, YS, FS, XX, YZ	M	Y	09/73 ▸	055121010X	**506227**	N	506066
1.7 i	E	1715	WT	M	Y	08/80 ▸ 07/81	037121010C	**506667**	N	506666
1.7 i ▸81-B-149 000	E	1715	WT	M	Y	08/80 ▸ 05/81	026121010DX	**506227**	N	506066
2.2 i *8132*	E	2144	WE	M	Y	10/80 ▸ 07/81	035121004AX	**506190**	CR	
2.2 i *8132*	E	2144	WE	A	Y	10/80 ▸ 07/81	035121004AX	**506190**	CR	
80 (81>86)										
1.3 *811/0/1, 813/0/1/2*	E	1297	EP	M	Y	08/81 ▸ 03/87	037121010C	**506667**	N	506666
1.6 *8122, 811/1/2/B/C, 813/0/1/2/B/C 814/0/1/2/B/C*	E	1588	YP, YZ, WV, WY	M	Y	08/81 ▸ 07/86	026121010CX	**506667**	N	506666
1.6 *811/1/2, 813/0/1/2, 814/0/2*	E	1588	WV, YP	A	Y	08/81 ▸ 07/83	026121010CX	**506667**	N	506666
1.6,1.6 i *811/0/1/2/G/H, 813/0/1/2 G/H/J/P, 814/0/1/2*	E	1595	PP, DT, JU, SA	M	Y	08/81 ▸ 03/87	037121010C	**506667**	N	506666
1.6,1.6 i *811/0/1/2/G/H, 813/0/1/2 G/H/J, 814/0/1/2*	E	1595	JU, DT, SA	A	Y	08/83 ▸ 03/87	037121010C	**506667**	N	506666
1.7 i *8142, 813/1/2*	E	1715	WT	M	Y	08/81 ▸ 07/83	026121010CX	**506667**	N	506666
1.7 i *8132, 8142*	E	1715	WT	A	Y	08/82 ▸ 07/83	026121010CX	**506667**	N	506666
1.8,1.8 i *811/0/1/2/5/B/C/G/H/L 813/0/1/2/5/8/B/C/G/H/J L, 814/0/1/2/5/8/B/C*	E	1781	DS, DZ, JN, NE, JV, PV, MU SF	M	Y	08/81 ▸ 08/87	037121010C	**506667**	N	506666
1.8,1.8 i *811/1/2/G/H, 813/0/1/2/8 G/H/J, 814/0/1/2/8*	E	1781	JN, DS, JV, SF	A	Y	08/81 ▸ 08/87	037121010C	**506667**	N	506666
1.9 *8143, 813/2/3*	E	1921	WN	M	Y	07/81 ▸ 08/86	035121005E	**506190**	CR	
1.9 *8133, 8143*	E	1921	WN	A	Y	08/81 ▸ 07/83	035121004AX	**506190**	CR	
2.0 i *811/0, 813/0/1/3, 8532, 814/0/3*	E	1994	JS, HP	M	Y	08/82 ▸ 08/86	035121005E	**506190**	CR	
2.0 i *813/1/2/3, 814/2/3*	E	1994	HP, JL, JS	A	Y	08/82 ▸ 07/84	035121004AX	**506190**	CR	
2.2,2.2 i *8142, 813/2/3, 853/2/6*	E	2144	KK, KL, WE	M	Y	08/81 ▸ 07/84	035121005E	**506190**	CR	
2.2 i *8132*	E	2144	WE	M	Y	08/84 ▸ 07/86	026121010C	**506667**	N	506666
2.2 i *8142, 813/2/3*	E	2144	WE	A	Y	07/81 ▸ 07/83	035121005E	**506190**	CR	
2.2 i *8132*	E	2144	WE	A	Y	08/83 ▸ 07/85	026121010C	**506667**	N	506666
1.6 D,1.6 TD *811/0/1/2, 813/0/1/2/3 814/0/1/2*	D	1588	CY, JK, CR	M	Y	08/81 ▸ 03/87	037121010C	**506667**	N	506666
1.6 D *811/0/1/2, 813/0/1/2*	D	1588	JK, CR	A	Y	08/81 ▸ 03/87	037121010C	**506667**	N	506666
80 (86>91)										
1.4 *8930*	E	1405	SE	M	Y	09/86 ▸ 07/88	026121010CX	**506667**	N	506666
1.6,1.6 i *8940, 8A20, 893/0*	E	1595	RN, RNA, PP, ABB	M	Y	09/86 ▸ 08/91	037121010C	**506667**	N	506666
1.6,1.6 i *8A20*	E	1595	RN, ABB	A	Y	08/89 ▸ 08/91	037121010C	**506667**	N	506666
1.8,1.8 i *8940, 8A20, 893/0/0*	E	1781	SF, JN, RU, NE, DZ, JV, PM	M	Y	09/86 ▸ 09/91	037121010C	**506667**	N	506666
1.8,1.8 i *8940, 8A20, 893/0/0*	E	1781	SF, PM, RU, NE, JN, JV	A	Y	09/86 ▸ 08/91	037121010C	**506667**	N	506666
1.9 i *8948, 893/0/1*	E	1857	SD	M	Y	08/86 ▸ 07/89	037121010C	**506667**	N	506666
1.9 i *893/0/1, 894/1/8*	E	1857	SD	A	Y	08/86 ▸ 07/89	037121010C	**506667**	N	506666
2.0 i,2.0 i 16V *8948, 8A20, 893/0/1/8*	E	1984	3A, AAD, 6A	M	Y	08/88 ▸ 09/91	037121010C	**506667**	N	506666
2.0 i *8A20, 893/0/1/8*	E	1984	3A, AAD	A	Y	08/88 ▸ 08/91	037121010C	**506667**	N	506666
1.6 D,1.6 TD *8940, 8A20, 893/0*	D	1588	RA, SB, JK	M	Y	02/87 ▸ 08/91	037121010C	**506667**	N	506666
1.9 D *8A20*	D	1896	1Y	M	Y	08/89 ▸ 08/91	026121010CX	**506667**	N	506666
80 (91>95)										
1.6 i *8C20, 8C50*	E	1595	ABB, ABM, ADA	M	Y	01/92 ▸ 07/95	037121010C	**506667**	N	506666
2.0 E,2.0 E 16V,2.0 S 2.0 i 16V *8C20, 8C50*	E	1984	ABT, ABK, ACE, 6A, ADW	M	Y	09/91 ▸ 07/95	037121010C	**506667**	N	506666
2.0 E,2.0 S *8C20, 8C50*	E	1984	ABT, ABK, ADW	A	Y	09/91 ▸ 07/95	037121010C	**506667**	N	506666
2.2 i Turbo 20V *8C27, 8C57*	E	2226	ABY	M	Y	02/93 ▸ 06/95	054121004A	**506336**	CR	
2.3 E *8C27, 8C57*	E	2309	NG	M	Y	09/91 ▸ 06/95	054121004A	**506336**	CR	
2.3 E *8C27*	E	2309	NG	A	Y	09/91 ▸ 06/95	054121004A	**506336**	CR	
2.6 E V6 *8C27, 8C57*	E	2598	ACZ, ABC	M	Y	07/92 ▸ 06/95	078121004C	**506442**	SS	
2.6 E V6 *8C27, 8C57* ▸8C-S-025 821	E	2598	ACZ, ABC	M	Y	08/94 ▸ 07/95	078121006	**506517**	SS	
2.6 E V6 *8C27, 8C57*	E	2598	ABC	A	Y	08/92 ▸ 06/95	078121004C	**506442**	SS	
2.6 E V6 *8C27, 8C57* ▸8C-S-025 821	E	2598	ABC, ACZ	A	Y	08/94 ▸ 07/95	078121006	**506517**	SS	

• **New** Nouveau **Nuevo** Novo **Nuovo** Nieuw **Neu** Yeni Новый Nou

Valeo

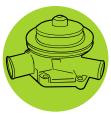

			CC						OE	Valeo		
AUDI (.../...)												
80 (91>95) (.../...)												
2.8 i V6	*8C27, 8C57*	E	2771	AAH	M	Y		09/91 ▸ 06/95	078121004C	**506442**	SS	
2.8 i V6	*8C27, 8C57*	E	2771	AAH	M	Y		08/94 ▸ 07/95	078121006	**506517**	SS	
8C-S-025 821 ▸												
2.8 i V6	*8C27, 8C57*	E	2771	AAH	A	Y		09/91 ▸ 06/95	078121004C	**506442**	SS	
2.8 i V6	*8C27, 8C57*	E	2771	AAH	A	Y		08/94 ▸ 07/95	078121006	**506517**	SS	
8C-S-025 821 ▸												
1.9 TD,1.9 TDi	*8C20, 8C50*	D	1896	AAZ, 1Z	M	Y		09/91 ▸ 07/95	037121010C	**506667**	N	506666
1.9 TD,1.9 TDi	*8C20, 8C50*	D	1896	1Z, AAZ	A	Y		09/91 ▸ 07/95	037121010C	**506667**	N	506666
90 (84>87)												
1.8 i	*8137*	E	1781	JN	A	Y		10/84 ▸ 07/86	037121010C	**506667**	N	506666
2.0 i	*8147, 813/7/K*	E	1994	JS, HP	M	Y		10/84 ▸ 03/87	035121005E	**506190**	CR	
2.0 i	*8147, 813/7/K*	E	1994	JS, SK, JL, HP	A	Y		10/84 ▸ 03/87	035121005E	**506190**	CR	
2.2 i	*8147, 813/7, 853/2/6/7/K*	E	2226	JT, HY, KV	M	Y		08/84 ▸	035121005E	**506190**	CR	
▸ 89-J-394 746												
2.2 i	*8137, 8147*	E	2226	KV, HY	A	Y		06/84 ▸	035121005E	**506190**	CR	
▸ 89-J-394 746												
90 (87>91)												
1.8 i	*8940, 8A27*	E	1781	DZ	M	Y		01/88 ▸ 1992	037121010C	**506667**	N	506666
2.0 i,2.0 i 20V	*8947, 8A27, 893/2/7*	E	1994	PS, NM	M	Y		05/88 ▸ 1992	034121005D	**506132**	CR	
89-J-394 743 ▸												
2.0 i	*8937, 8947*	E	1994	PS	A	Y		05/88 ▸ 07/89	034121005D	**506132**	CR	
J394747 ▸												
2.0 i	*8937, 8947*	E	1994	PS	A	Y		08/87 ▸	035121005E	**506190**	CR	
▸ 89-J-396 702												
2.0 i	*8947, 893/2/7*	E	1994	PS	M	Y		04/87 ▸	035121005E	**506190**	CR	
▸ J394746												
2.2 i	*8947, 8A27, 893/7*	E	2226	KV	M	Y		08/89 ▸ 1992	034121005D	**506132**	CR	
J394747 ▸												
2.2 i	*8947, 8A27, 893/7*	E	2226	KV	M	Y		04/87 ▸	035121005E	**506190**	CR	
▸ J394746												
2.3 i,2.3 i 20V	*893/2/7, 8A27, 894/7/A*	E	2309	7A, NG	M	Y		04/87 ▸ 1992	034121005D	**506132**	CR	
89-J-394 743 ▸												
2.3 i,2.3 i 20V	*893/2/7, 8A27, 894/2/7/A*	E	2309	NG, 7A	A	Y		04/88 ▸ 1992	034121005D	**506132**	CR	
J396703 ▸												
2.3 i,2.3 i 20V	*893/2/7, 8A27, 894/2/7/A*	E	2309	NG, 7A	A	Y		08/87 ▸	035121005E	**506190**	CR	
▸ 89-J-349 742												
2.3 i	*8947, 893/2/7*	E	2309	NG	M	Y		04/87 ▸	035121005E	**506190**	CR	
▸ J396702												
1.6 TD	*8937, 8A27*	D	1588	SB, RA	M	Y		04/88 ▸ 1992	037121010C	**506667**	N	506666
100 (71>82)												
1.6	*431/0/1, 432/0/1, 433/0/1/2/B/C/T 434/0/1/2/B/C, 435/1/2, 436/1/2*	E	1588	YV	M	Y		08/76 ▸ 07/82	068121010	**506227**	N	506066
1.6	*4331*	E	1588	YV	A	Y		▸ 07/81	068121005A	**506667**	N	506666
B070001 ▸												
1.6	*431/0/1, 432/0/1, 433/0/1/2/T, 434 0/1, 435/1/2, 436/1/2*	E	1588	YV	A	Y		08/76 ▸	068121010	**506227**	N	506066
1.9	*431/0/1, 433/0/1/2/6/T, 434/0/1/2 4362, 4451, 435/1/2*	E	1921	WH	M	Y		01/80 ▸ 07/82	035121004AX	**506190**	CR	
2.1,2.2,2.2 i	*431/0/1, 433/0/1/2/6/T*	E	2144	WG, WC, WE, WB	A	Y		03/77 ▸ 07/82	035121005C	**506190**	CR	
43-A-0000 001 ▸	*434/0/1/2/6, 435/1/2/6 436/1/2/6*											
2.2 i		E	2144	WC		Y		09/77 ▸	035121005C	**506190**	CR	
43-A-0090 246 ▸												
2.1,2.2,2.2 i	*431/0/1, 433/0/1/2/6/T*	E	2144	WB, WC, WG, WE	M	Y		04/78 ▸ 07/82	035121005C	**506190**	CR	
04-3-090 246 ▸ A090245	*434/0/1/2/6, 435/1/2/6 436/1/2/6*											
2.0 D,2.0 TD	*431/0/1, 433/0/1/2/6/T 434/0/1/2/6, 435/1/2/6 436/1/2/6*	D	1986	CN, DE	M	Y		10/78 ▸ 07/82	069121005D	**506105**	CR	

• **New** Nouveau **Nuevo** Novo **Nuovo** Nieuw **Neu** Yeni Новый Nou

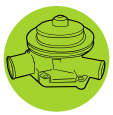

Valeo

Water pump
Pompe à eau
Bomba de água
Bomba de água
Pompa acqua
Waterpomp

Wasserpumpen
Pompa wodna
Vízpumpa
Su pompasi
ВОДЯНОЙ НАСОС

Vodní pumpa
Pompa de apă

		Type Ctr.		cc						OE	Valeo		
AUDI (.../...)												
100 (71>82) (.../...)												
2.0 D,2.0 TD	*431/1, 433/0/1/2/6/T, 435 1/2/6*	D	1986	CN, DE	A	Y		10/78 ▸ 07/82	069121004X	**506105**	CR	
2.0 D		D	1986	CN		Y		09/79 ▸ 07/81	069121005D	**506105**	CR	
100 (82>90)												
1.8,1.8 i	*443/0/1/2/3/6/C/G/J/K/P 444/0/1/2/6, 445/0/1/2/6 G/J/K/P, 446/2/6*	E	1781	NP, DR, SH, RS, DS, PH, JW 4B	M	Y		08/82 ▸ 12/90	037121010C	**506667**	N	506666
1.8,1.8 i	*443/0/1/2/6/G/J/K/P, 444 0/1/2/6/P, 445/0/1/2/6/G J/K/P, 446/2/6/P*	E	1781	4B, DS, PH, SH, DR, JW	A	Y		08/82 ▸ 12/90	037121010C	**506667**	N	506666
1.9 ▸ 44-E-000 001	*443/0/1/2/6, 444/0/1/6, 4462, 445/0 2*	E	1921	WH	M	Y		08/82 ▸ 07/84	035121004AX	**506190**	CR	
1.9 ▸ 44-E-000 001	*443/0/1/2/6, 4452, 4462, 444/0/1/6*	E	1921	WH	A	Y		08/82 ▸ 07/84	035121004AX	**506190**	CR	
2.0 i ▸ 010236	*444P, 445P, 446P, 443/P*	E	1994	RT	M	Y		▸ 12/90	034121004X	**506132**	CR	
2.0 i	*443/0/2/6/G/J/K/P, 444/2/6/P, 445/0 2/6/G/J/K/P, 446/2/P*	E	1994	KP, RT, SL	M	Y		08/84 ▸	035121004AX	**506190**	CR	
2.0 i ▸ 010236	*444P, 445P, 446P, 443/P*	E	1994	RT	A	Y		▸ 12/90	034121004X	**506132**	CR	
2.0 i	*4442*	E	1994	KP	A	Y		08/84 ▸ 12/87	037121010C	**506667**	N	506666
2.0 i	*443/0/2/6/G/J/K/P, 444/6/A/P, 445/0 2/6/G/J/K/P, 446/2/P*	E	1994	KP, RT, SL	A	Y		08/84 ▸	035121004AX	**506190**	CR	
2.2,2.2 i	*4442, 443/0/1/2/6, 445/0 1/2/5/6, 446/5/6*	E	2144	WC, WB	A	Y		08/82 ▸ 12/87	035121004AX	**506190**	CR	
2.2,2.2 i ▸ 44-J-200 099	*443/0/1/2/6, 444/2/6, 445 0/1/2/5/6, 446/5/6*	E	2144	WC, WB	M	Y		08/82 ▸	035121004AX	**506190**	CR	
2.2 ▸ 44-L-100 000	*443C*	E	2200	PR	M	Y		08/89 ▸ 06/90	069121004X	**506105**	CR	
2.2 ▸ 44-L-100 000	*443C*	E	2200	PR	A	Y		08/89 ▸ 06/90	069121004X	**506105**	CR	
2.2 Turbo,2.2 i 2.2 i Turbo ▸ 44-J-246 282	*443/0/5/6/D/H/P/R, 444/5 6/H/P/R, 445/2/5/D/H/P 446/5/8/D/H/P*	E	2226	KU, MC, HX	M	Y		▸ 12/90	034121004X	**506132**	CR	
2.2 Turbo,2.2 i	*443/2, 446P, 445/2/6/J*	E	2226	KU, WU, HX, MC	M	Y		05/83 ▸ 07/90	037121010C	**506667**	N	506666
2.2 i ▸ L10001	*4466*	E	2226	KU	A	Y	20 teeth	▸ 07/90	046121004	**506130**	CR	
2.2 Turbo,2.2 i 2.2 i Turbo ▸ 44-J-200 099	*443/6/B/H/P/R, 444/6/8/B H/P/R, 445/0/2/6/H/P, 446 6/B/H/P*	E	2226	KU, MC, HX	A	Y		▸ 12/90	034121004X	**506132**	CR	
2.2 i	*4466*	E	2226	KU	A	Y		08/84 ▸ 07/86	069121004X	**506105**	CR	
2.2,2.2 Turbo,2.2 i 2.2 i Turbo ▸ 017116 ▸ 017115	*443/0/1/2/5/6/7/8/D/G/H/J K/P/R, 444/2/5/6/7/8/D/H P/R, 445/0/2/5/6/7/D/G/H J/K/P, 446/6/8/B/H/P*	E	2226	HX, KU, MC, KZ, WU, KF	A	Y		08/82 ▸	035121004AX	**506190**	CR	
2.2,2.2 Turbo,2.2 i 2.2 i Turbo ▸ J246281	*443/0/1/2/3/5/6/D/G/H/J/K P/R, 444/5/6/8/D/H/P/R 445/0/2/5/6/D/G/H/J/K/P 446/5/6/8/D/H/P*	E	2226	HX, WU, KU, MC, KZ, KF, PX	M	Y		08/82 ▸	035121005E	**506190**	CR	
2.3 i ▸ J246282 ▸	*443/G/H/J/K/M/P/R/U, 444/5/8/M/P 445/G/H/J/K/M/P/U, 446/8/M/P*	E	2309	NF	M	Y		▸ 12/90	034121004X	**506132**	CR	
2.3 i ▸ L10001 ▸	*446P*	E	2309	NF	M	Y	20 teeth	▸ 07/90	046121004	**506130**	CR	
2.3 i ▸ 44-J-200 100 ▸	*443/2/7/B/G/H/J/K/M/P/R/S/U, 444/2 5/7/8/B/M/N/P/S, 445/8/B/G/H/J/K/M P/U, 446/8/B/M/P*	E	2309	NF	A	Y		▸ 12/90	034121004X	**506132**	CR	
2.3 i	*446P*	E	2309	NF	A	Y		01/88 ▸ 07/89	026121005G	**506667**	N	506666
2.3 i ▸ 44-J-200 099	*443/2/7/B/G/H/J/K/M/P/R/S/U, 444/2 5/7/8/B/M/N/P/S, 445/8/B/G/H/J/K/M P/U, 446/8/B/M/P*	E	2309	NF	A	Y		08/86 ▸	035121004AX	**506190**	CR	
2.3 i ▸ J246281	*443/G/H/J/K/M/P/R/U, 444/5/8/M/P 445/G/H/J/K/M/P/U, 446/8/M/P*	E	2309	NF	M	Y		08/86 ▸	035121004AX	**506190**	CR	

• **New** Nouveau **Nuevo** Novo **Nuovo** Nieuw **Neu** Yeni Новый Nou

Valeo

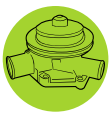

Type Ctr.		CC					OE	Valeo		
AUDI (.../...)										
100 (82>90) (.../...)										
2.0 TD *443P* L10001 ▸	D	1986	NC	M	Y	20 teeth	▸ 07/88	046121004	**506130**	CR	
2.0 TD *443P* L10001 ▸	D	1986	NC	A	Y	20 teeth	▸ 07/88	046121004	**506130**	CR	
2.0 D,2.0 TD *443/0/1/2/6/P, 444/0/1/2 4462, 445/0/1/2/6/P*	D	1986	CN, DE, NC	A	Y		08/82 ▸ 07/89	069121004X	**506105**	CR	
2.0 D,2.0 TD *443/0/1/2/6/P, 444/0/1/2 P, 445/0/1/2/6/P, 446/2/P* ▸ 44-L-100 000	D	1986	DE, NC, CN	M	Y		08/82 ▸ 08/89	069121004X	**506105**	CR	
2.4 D *443P, 445P* L10001 ▸	D	2370	3D	M	Y	20 teeth	▸ 1991	046121004	**506130**	CR	
2.5 TDi *443P, 445P*	D	2460	1T	M	Y	20 teeth	01/90 ▸ 12/90	046121004	**506130**	CR	
100 (90>94)										
1.6,1.6 i *4A20, 4A50*	E	1595	ABB, ADA	M	Y		03/92 ▸ 07/94	037121010C	**506667**	N	506666
2.0 16V,2.0 i,2.0 i 16V *4A20, 4A50*	E	1984	ABK, AAE, AAD, ACE, ADW	M	Y		12/90 ▸ 07/94	037121010C	**506667**	N	506666
2.0 i *4A20, 4A50*	E	1984	AAD, ABK, AAE, ADW	A	Y		12/90 ▸ 07/94	037121010C	**506667**	N	506666
2.3 i *4A20, 4A50*	E	2309	AAR	M	Y		12/90 ▸ 07/94	054121004A	**506336**	CR	
2.3 i *4A20, 4A50*	E	2309	AAR	A	Y		12/90 ▸ 07/94	054121004A	**506336**	CR	
2.6 V6,2.6 i V6 *4A2/0/7, 4A5/0/7*	E	2598	ACZ, ABC	M	Y		04/92 ▸ 07/94	078121004C	**506442**	SS	
2.6 V6,2.6 i V6 *4A2/0/7, 4A5/0/7*	E	2598	ACZ, ABC	A	Y		04/92 ▸ 07/94	078121004C	**506442**	SS	
2.8 i V6 *4A20*	E	2771	AAH	M	Y		12/90 ▸ 07/94	078121004A	**506792**	SS	
2.8 i V6 *4A20*	E	2771	AAH	M	Y		12/90 ▸ 07/94	078121004	**506517**	SS	
2.8 i V6 *4A20, 4A50*	E	2771	AAH	M	Y		12/90 ▸ 07/94	078121004C	**506442**	SS	
2.8 i V6 *4A20, 4A50*	E	2771	AAH	A	Y		12/90 ▸ 07/94	078121004C	**506442**	SS	
2.4 D *4A20, 4A50*	D	2370	AAS	M	Y	20 teeth	05/91 ▸ 07/94	074121005N	▲**506920**	CR	
2.4 D *4A20*	D	2370	AAS	A	Y	20 teeth	12/90 ▸ 07/91	074121005N	▲**506920**	CR	
2.5 TDi *4A20, 4A50*	D	2460	AAT, ABP	M	Y	18 teeth	06/91 ▸ 07/94	046121004D	**506488**	CR	
2.5 TDi *4A20, 4A50*	D	2460	AAT	A	Y	18 teeth	01/93 ▸ 07/94	046121004D	**506488**	CR	
200										
2.1,2.1 Turbo *4382, 437/2, 447/1/6, 448 1/6*	E	2144	WJ, KG, JY, WC, WK	M	Y		10/79 ▸ 01/88	035121005E	**506190**	CR	
2.1,2.1 Turbo *4382, 437/2/5, 4481, 447 1/4/G*	E	2144	WJ, WC, KG, WK, KJ, KH, JY WS	A	Y		10/79 ▸ 01/88	035121005E	**506190**	CR	
2.2 Turbo *447/B/D/J/P/R/S, 448/D/P* J246281 ▸	E	2226	MC, 1B	M	Y		▸ 12/90	034121005D	**506132**	CR	
2.2,2.2 Turbo *447/1/4/B/D/G/H/J/P/R/S 448/1/D/P*	E	2226	MC, 1B, KU	M	Y		08/84 ▸	035121005E	**506190**	CR	
2.2,2.2 Turbo *447/1/4/B/G/J/P, 448/1/9 M/P*	E	2226	MC, KU, 2B	A	Y		08/84 ▸ 12/90	035121005E	**506190**	CR	
2.2 Turbo *448M, 447/B/J/P*	E	2226	MC	A	Y		05/88 ▸ 12/90	034121004X	**506132**	CR	
2.3 Turbo 20V *445D, 447P* J246282 ▸	E	2309	3B	M	Y		08/88 ▸ 12/90	034121005D	**506132**	CR	
2.3 Turbo 20V *445D, 447P* ▸ J246281	E	2309	3B	M	Y		03/89 ▸	035121005E	**506190**	CR	
A1										
1.4 TFSI 122 16V *8X1/A/B*	E	1390	CAXA	M	Y		08/10 ▸	03C121008B	●**506950**	N	
1.4 TFSI 122 16V *8X1/A/B*	E	1390	CAXA	A	Y		05/10 ▸	03C121008BX	●**506950**	N	
1.6 TDI 16V *8X1/A/B*	D	1598	CAYC	M	Y	19 teeth	05/10 ▸	03L121011X	▲**506974**	CR	
A2										
1.4 i 16V *8Z00*	E	1390	BBY, AUA	M	Y		06/00 ▸	036121005S	**506576**	CR	
1.6 FSI 16V *8Z00*	E	1595	BAD	M	Y		05/02 ▸	036121008G	**506706**	CR	
1.2 TDi *8Z0/D/E* 8Z-3-000 001 ▸	D	1191	ANY	M	Y		05/02 ▸	045121011F	**506700**	CR	
1.2 TDi *8Z0/D/E* ▸ 8Z-2-070 000	D	1191	ANY	M	Y		04/01 ▸ 05/02	045121011B	**506873**	CR	
1.4 TDi *8Z00* 8Z-3-000 001 ▸	D	1422	BHC, AMF, ATL	M	Y		05/02 ▸	045121011F	**506700**	CR	
1.4 TDi *8Z00* ▸ 8Z-2-070 000	D	1422	AMF	M	Y		06/00 ▸ 05/02	045121011B	**506873**	CR	
A3 (96>2003)										
1.6 i *8L1/A/B/C*	E	1595	AVU	M	Y	23 teeth	05/00 ▸ 08/00	06A121012	**506532**	CR	

• **New** Nouveau **Nuevo** Novo **Nuovo** Nieuw **Neu** Yeni Новый Nou

		Type Ctr.		cc						OE	Valeo		
AUDI (.../...)													
A3 (96>2003) (.../...)													
1.8 i 20V,1.8 i Turbo 20V	*8L1/0/A/B/C/H*	E	1781	AGU, AJQ, AQA, APG, AGN, ARX AUM, ARZ, APP, AUQ, ARY	M	Y	23 teeth	09/00 ▸	06A121011T	**506532**	CR	
1.8 i 20V,1.8 i Turbo 20V	*8L1/0/A/B/C/H*	E	1781	AGU, AGN, ARZ, APG, AJQ, ARY ARX, AUM, AUQ, AQA	A	Y	23 teeth	09/00 ▸ 06/03	06A121011T	**506532**	CR	
1.9 TDi	*8L1/A/B/C*	D	1896	ASZ	M	Y	23 teeth	05/00 ▸ 08/00	06A121012X	**506532**	CR	
1.9 TDi	*8L1/A/B/C*	D	1896	ASZ	M	Y		09/00 ▸	038121011D	**506699**	CR	
1.9 TDi	*8L1/A/B/C*	D	1896	ASZ	A	Y	23 teeth	05/00 ▸ 08/00	06A121012X	**506532**	CR	
1.9 TDi	*8L1/A/B*	D	1896	ASZ	A	Y		11/00 ▸	038121011D	**506699**	CR	
1.9 TDi 8L-3-000 001 ▸	*8L1/A/B/C*	D	1896	AXR, ASZ, ATD	M	Y		04/02 ▸	038121011J	**506872**	CR	
1.9 TDi	*8L1/0/A/B/C/H*	D	1896	AGR, ASZ, AHF, ASV, ALH	M	Y		09/96 ▸ 04/02	038121011A	**506533**	CR	
1.9 TDi 8L-3-000 001 ▸	*8L1/A/B/C*	D	1896	ATD, ASZ	A	Y		04/02 ▸	038121011J	**506872**	CR	
1.9 TDi	*8L1/0/A/B/C/H*	D	1896	AGR, AHF, ASV, ALH, ASZ	A	Y		09/96 ▸ 06/01	038121011A	**506533**	CR	
1.9 TDi ▸ 8L-2-150 000	*8L1/A/B/C*	D	1896	ATD, AXR, ASZ	M	Y		09/00 ▸ 04/02	038121011CX	**506871**	CR	
1.9 TDi ▸ 8L-2-150 000	*8L1/A/B/C*	D	1896	ATD, ASZ	A	Y		09/00 ▸ 04/02	038121011CX	**506871**	CR	
A3 (2003>)													
1.4 TFSi	*8P1/A/B/C, 8PA/A/B/C*	E	1390	CAXC	M	Y		09/07 ▸	03C121005N	●**506950**	N	
1.6 FSi	*8P1/A/B/C, 8PA/A/B/C*	E	1598	BAG,BLF,BLP	M	Y		08/03 ▸	03C121005SX	●**506867**	N	
2.0 TFSi 16V	*8P1/A/B/C, 8PA/A/B/C*	E	1984	BWA, AXX	M	Y	23 teeth	09/04 ▸	06F121011X	**506876**	CR	
2.0 TFSi 16V	*8P1/B/C, 8PA/B/C*	E	1984	BWA, AXX	A	Y	23 teeth	09/04 ▸	06F121011X	**506876**	CR	
2.0 FSi 16V	*8P1/A/B/C, 8PA/A/B/C*	E	1984	AXW,BLR,BLX,BLY,BMB,BVY,BVZ	M	Y		05/03 ▸ 06/08	06B121011MX	**506790**	CR	
2.0 FSi 16V	*8P1/A/B/C, 8PA/A/B/C*	E	1984	AXW,BLR,BLX,BLY,BMB,BVY,BVZ	A	Y		05/03 ▸ 06/08	06B121011MX	**506790**	CR	
3.2 i V6 24V	*8P1B, 8PAB*	E	3189	BMJ, BDB, BUB	M	Y		07/03 ▸	022121011	**506798**	N	
3.2 i V6 24V	*8P1B, 8PAB*	E	3189	BUB, BDB, BMJ	A	Y		07/03 ▸	022121011	**506798**	N	
1.9 TDi	*8P1/A/B/C, 8PA/A/B/C*	D	1896	BXE, BLS, BKC	M	Y		06/03 ▸	045121011F	**506700**	CR	
1.9 TDi	*8P1/B/C, 8PA/B/C*	D	1896	BLS, BXE, BKC	A	Y		03/06 ▸	045121011F	**506700**	CR	
2.0 TDi 16V ▸ 8P-6-131 500	*8P1/A/B/C, 8PA/A/B/C/Z*	D	1968	BKD, AZV, BMN, BUY	M	Y		05/03 ▸	03G121011	**506699**	CR	
2.0 TDi ▸ 8P-6-131 500	*8P1/A/B/C, 8PA/A/B/C*	D	1968	BMM	M	Y		01/05 ▸	038121011J	**506872**	CR	
2.0 TDi 16V ▸ 8P-6-131 500	*8P1/A/B/C, 8PA/A/B/C*	D	1968	BKD, AZV, BMN, BUY	A	Y		05/03 ▸	03G121011	**506699**	CR	
2.0 TDi ▸ 8P-6-131 500	*8P1/A/B/C, 8PA/A/B/C*	D	1968	BMM	A	Y		06/05 ▸	038121011J	**506872**	CR	
A3 (2008>)													
1.4 TFSi 16V	*8P1/A/B/C, 8PA/A/B/C*	E	1390	CAXC	M	Y		07/08 ▸	03C121008E	●**506950**	N	
1.4 TFSi 16V	*8P1/A/B/C, 8PA/A/B/C*	E	1390	CAXC	M	Y		07/08 ▸	03C121005NX	●**506950**	N	
1.4 TFSi 16V	*8P1/A/B/C, 8PA/A/B/C*	E	1390	CAXC	A	Y		07/08 ▸	03C121008BX	●**506950**	N	
1.6 Tdi	*8PA/A/B/C/E/8P7/A/B*	D	1598	CAYB,CAYC	M	Y	19 teeth	05/09 ▸	03L121011X	▲**506974**	CR	
1.6 TDi 105	*8P1/A/B/C, 8PA/A/B/C*	D	1598	CAYC	A	Y	19 teeth	11/09 ▸	03L121011	▲**506974**	CR	
A3 Cabriolet													
2.0 TDi 16V	*8P1/A/B/C, 8PA/A/B/C,8P7 A/B*	D	1968	CFFA,CFFB	M	Y	19 teeth	11/09 ▸	03L121011X	▲**506974**	CR	
2.0 TDi 16V	*8P1/A/B/C, 8PA/A/B/C,8P7 A/B*	D	1968	CFFA,CFFB	A	Y	19 teeth	02/10 ▸	03L121011	▲**506974**	CR	
A4 (94>98)													
1.6 i	*8D2/0/H, 8D5/0/H*	E	1595	ADP	M	Y		11/94 ▸ 10/96	026121005L	**506667**	N	506666
1.6 i	*8D2/0/H, 8D5/0/H*	E	1595	ADP	A	Y		11/94 ▸ 10/96	026121005L	**506667**	N	506666
1.8 i 20V 8DX015001 ▸	*8D2/0/S/T*	E	1781	ADR	M	Y		09/98 ▸ 12/98	026121010A	**506227**	N	506066
1.8 i Turbo 20V	*8D20, 8D50*	E	1781	APU, ARK	A	Y		08/98 ▸ 12/98	050121010AX	**506603**	N	506594
1.8 i 20V 8DX015001 ▸	*8D2/0/S*	E	1781	ADR	A	Y		09/98 ▸ 12/98	026121010A	**506227**	N	506066
1.8 i 20V,1.8 i Turbo 20V ▸ 8D-X-015000	*8D2/0/H/S, 8D5/0/H*	E	1781	ARK, AJL, ARG, AEB, ADR, AFY APU	M	Y		11/94 ▸ 12/98	050121010C	**506603**	N	506594

• **New** Nouveau **Nuevo** Novo **Nuovo** Nieuw **Neu** Yeni Новый Nou

Valeo

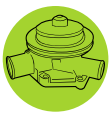

			CC						OE	Valeo		
AUDI (.../...)												
A4 (94>98) (.../...)												
1.8 i 20V,1.8 i Turbo 20V 8DX015001 ▸ 8DX015000	*8D2/0/H/S/T, 8D5/0/H/S*	E	1781	ADR, AFY, AEB, AJL, APU, ARG ARK	M	Y		11/94 ▸ 12/98	026121005L	**506667**	N	506666
1.8 i 20V,1.8 i Turbo 20V 8DX015001 ▸ 8DX015000	*8D2/0/H/S, 8D5/0/H/S*	E	1781	ADR, AEB, ARK, APU, AFY	A	Y		11/94 ▸ 12/98	026121010C	**506667**	N	506666
2.4 i V6,2.4 i V6 30V	*8D2/0/H/S, 8D5/0/H*	E	2393	AGA, ALF, APS, AJG, APZ, AML ARJ, AFM	M	Y		07/95 ▸ 12/98	078121006	**506517**	SS	
2.4 i V6,2.4 i V6 30V	*8D50, 8D2/0/H/S*	E	2393	APS, AGA, APZ, ARJ, AML, ALF AJG	A	Y		08/97 ▸ 12/98	078121006	**506517**	SS	
2.6 i V6	*8D2/0/H/S, 8D5/0/H/S*	E	2598	ABC, ACZ	M	Y		11/94 ▸ 12/98	078121006	**506517**	SS	
2.6 i V6	*8D2/0/H/S, 8D5/0/H/S*	E	2598	ABC, ACZ	A	Y		11/94 ▸ 07/98	078121006	**506517**	SS	
2.8 i V6,2.8 i V6 30V	*8D2/0/H/S, 8D5/0/H*	E	2771	APR, ACK, ALG, AQD, AAH, AMX	M	Y		11/94 ▸ 12/98	078121006	**506517**	SS	
2.8 i V6,2.8 i V6 30V	*8D2/0/H/S, 8D5/0/H*	E	2771	ALG, ACK, APR, AAH, AQD, AMX	A	Y		02/95 ▸ 12/98	078121006	**506517**	SS	
1.9 TDi	*8D2/0/H, 8D5/0/H*	D	1896	1Z, AHH, AHU, AFN, AFF	M	Y		11/94 ▸ 12/98	028121004	**506513**	N	
1.9 TDi	*8D20*	D	1896	AJM	M	Y		08/98 ▸ 12/98	038121011CX	**506871**	CR	
1.9 TDi	*8D2/0/H, 8D5/0/H*	D	1896	1Z, AFN, AHU	A	Y		01/95 ▸ 12/98	028121004	**506513**	N	
1.9 TDi	*8D20*	D	1896	AJM	A	Y		08/98 ▸ 12/98	038121011CX	**506871**	CR	
2.5 TDi V6 24V	*8D20, 8D50*	D	2496	AKN	M	Y		07/98 ▸ 12/98	059121004E	**506591**	SS	
2.5 TDi V6 24V	*8D20, 8D50*	D	2496	AKN	A	Y		07/98 ▸ 12/98	059121004E	**506591**	SS	
A4 (99>2001)												
1.8 i Turbo 20V	*8D20*	E	1781	AWT	M	Y	23 teeth	06/00 ▸ 10/00	06A121011TX	**506532**	CR	
1.8 i 20V,1.8 i Turbo 20V	*8D2/0/S/T, 8D5/0/S*	E	1781	APT, ADR, ANB, APU, ARG, AJL AFY, ARK	M	Y		01/99 ▸ 11/00	050121010AX	**506603**	N	506594
1.8 i 20V,1.8 i Turbo 20V	*8D2/0/S, 8D5/0/S*	E	1781	APU, ARG, ADR, APT, ANB, AFY	A	Y		01/99 ▸ 11/00	050121010AX	**506603**	N	506594
2.4 i V6 30V	*8D2/0/S, 8D5/0/S*	E	2393	ARJ, APS, AML, APZ	M	Y		02/99 ▸ 11/00	078121006	**506517**	SS	
2.4 i V6 30V	*8D2/0/S, 8D5/0/S*	E	2393	APS, APZ, ARJ	A	Y		02/99 ▸ 11/00	078121006	**506517**	SS	
2.7 i V6 30V	*8D20*	E	2671	AGB	M	Y		02/99 ▸ 10/00	078121006A	**506792**	SS	
2.8 i V6 30V	*8D50, 8D2/0/S*	E	2771	ATX, APR, AQD, AMX	M	Y		01/99 ▸ 11/00	078121006	**506517**	SS	
2.8 i V6 30V	*8D50, 8D2/0/S*	E	2771	APR, AQD, ATX, AMX	A	Y		01/99 ▸ 11/00	078121006	**506517**	SS	
1.9 TDi	*8D20, 8D50*	D	1896	AHU, AFN, AVG, AHH	M	Y		01/99 ▸ 11/00	028121004	**506513**	N	
1.9 TDi	*8D20, 8D50*	D	1896	AJM, ATJ	M	Y		07/99 ▸ 11/00	038121011CX	**506871**	CR	
1.9 TDi	*8D20, 8D50*	D	1896	AJM	A	Y		01/00 ▸ 09/01	038121011CX	**506871**	CR	
1.9 TDi	*8D20, 8D50*	D	1896	AFN, AHU	A	Y		01/99 ▸ 11/00	028121004	**506513**	N	
2.5 TDi V6 24V	*8D20, 8D50*	D	2496	AKN	M	Y		02/99 ▸ 11/00	059121004E	**506591**	SS	
2.5 TDi V6 24V	*8D20, 8D50*	D	2496	AKN	A	Y		02/99 ▸ 11/00	059121004E	**506591**	SS	
A4 (2000>2004)												
1.8 i Turbo 20V	*8E50, 8E2/0/5*	E	1781	AVJ, BFB, BEX, AMB	M	Y	23 teeth	12/00 ▸	06A121011T	**506532**	CR	
1.8 i Turbo 20V	*8E2/0/5, 8E5/0/5*	E	1781	AMB, AVJ, BEX, BFB	A	Y	23 teeth	04/01 ▸	06A121011T	**506532**	CR	
2.4 i V6 30V	*8E20, 8E50*	E	2393	BDV, AMM	M	Y		09/01 ▸	078121006	**506517**	SS	
2.4 i V6 30V	*8E20, 8E50*	E	2393	BDV, AMM	A	Y		09/01 ▸	078121006	**506517**	SS	
3.0 i 30V,3.0 i V6 30V 8E-2-130001 ▸ 8E-2-130000	*8E2/0/5, 8E5/0/5*	E	2976	BBJ, ASN	M	Y		12/00 ▸	06C121004H	**506781**	SS	
3.0 i 30V,3.0 i V6 30V ▸ 8E-2-130000	*8E2/0/5, 8E5/0/5*	E	2976	BBJ, AVK, ASN	A	Y		12/00 ▸	06C121004H	**506781**	SS	
1.9 TDi 8E-2-295 001 ▸	*8E20, 8E50*	D	1896	AWX, AVF, AVB, BKE	M	Y		04/02 ▸	038121011J	**506872**	CR	
1.9 TDi 8E-2-295 001 ▸	*8E20, 8E50*	D	1896	AVF	A	Y		11/02 ▸ 12/04	038121011J	**506872**	CR	
1.9 TDi ▸ 8E-2-295 000	*8E20, 8E50*	D	1896	AVF, AWX, AVB	M	Y		12/00 ▸	038121011CX	**506871**	CR	
2.5 TDi 24V,2.5 TDi V6 2.5 TDi V6 24V	*8E20, 8E50*	D	2496	BDG, AKE, BAU, BDH, BFC, AYM	M	Y		12/00 ▸	059121004E	**506591**	SS	
2.5 TDi V6,2.5 TDi V6 24V	*8E20, 8E50*	D	2496	BDG, AYM, BFC, AKE, BAU	A	Y		04/01 ▸	059121004E	**506591**	SS	
A4 (2004>)												
1.8 i Turbo 20V	*8EC0, 8ED0*	E	1781	BFB	M	Y	23 teeth	11/04 ▸	06A121011TX	**506532**	CR	
1.8 i Turbo 20V	*8EC0, 8ED0*	E	1781	BFB	A	Y	23 teeth	11/04 ▸	06A121011TX	**506532**	CR	
2.0 TFSi 16V	*8EC0, 8ED0*	E	1984	BGB, BWE	M	Y	23 teeth	11/04 ▸	06F121011X	**506876**	CR	
2.0 TFSi 16V	*8EC0, 8ED0*	E	1984	BGB, BWE	A	Y	23 teeth	11/04 ▸	06F121011X	**506876**	CR	
2.0 TFSi 16V	*8EC0, 8ED0*	E	1996	BUL	M	Y	23 teeth	11/04 ▸	06F121011X	**506876**	CR	
2.0 TFSi 16V	*8EC0, 8ED0*	E	1996	BUL	A	Y	23 teeth	06/05 ▸	06F121011X	**506876**	CR	
3.0 i 30V	*8EC0, 8ED0*	E	2976	BBJ	M	Y		11/04 ▸	06C121004H	**506781**	SS	

• **New** Nouveau **Nuevo** Novo **Nuovo** Nieuw **Neu** Yeni Новый Nou

AUDI (.../...)

A4 (2004>) (.../...)

3.0 i 30V	8EC0, 8ED0	E	2976	BBJ	A	Y		11/04 ▸	06C121004H	**506781**	SS	
3.2 FSi V6 24V	8EC0, 8ED0	E	3123	AUK	M	Y		01/05 ▸ 06/08	06E121005F	**506911**	N	
3.2 FSi V6 24V	8ED0, 8EC/0/0	E	3123	AUK	A	Y		01/05 ▸ 06/08	06E121005F	**506911**	N	
1.9 TDi	8EC0, 8ED0	D	1896	BRB, BKE	M	Y		11/04 ▸	038121011J	**506872**	CR	
2.0 TDi	8EC0, 8ED0	D	1968	BPW	M	Y		11/04 ▸	038121011J	**506872**	CR	
2.0 TDi 16V	8EC0, 8ED0	D	1968	BLB, BRE, BNA, BVG, BRF	A	Y		11/04 ▸	038121011K	**506699**	CR	
2.0 TDi	8EC0, 8ED0	D	1968	BPW	A	Y		11/04 ▸	038121011J	**506872**	CR	
2.0 TDi 16V	8EC0, 8ED0	D	1968	BRF, BLB, BRE, BNA, BVF	M	Y		11/04 ▸	038121011K	**506699**	CR	
8E-6-177 001 ▸ 8E-9-177 000												
2.5 TDi V6 24V	8EC0, 8ED0	D	2496	BDG, BCZ	M	Y		11/04 ▸	059121004E	**506591**	SS	
2.5 TDi V6 24V	8EC0, 8ED0	D	2496	BDG, BCZ	A	Y		11/04 ▸	059121004E	**506591**	SS	
2.7 TDi V6 24V	8EC0, 8ED0	D	2698	BPP,BSG	M	Y		11/05 ▸ 06/08	06E121005F	**506911**	N	
2.7 TDi V6 24V	8EC0, 8ED0	D	2698	BPP,BSG	A	Y		03/06 ▸ 06/08	06E121005F	**506911**	N	
3.0 TDi V6 24V	8EC0, 8ED0	D	2967	ASB,BKN	M	Y		11/04 ▸ 06/08	06E121005F	**506911**	N	
3.0 TDi V6 24V	8EC0, 8ED0	D	2967	ASB,BKN	A	Y		11/04 ▸ 06/08	06E121005F	**506911**	N	

A4 Cabriolet (2002>)

1.8 i Turbo 20V	8H70	E	1781	BFB	M	Y	23 teeth	07/02 ▸	06A121011TX	**506532**	CR	
1.8 i Turbo 20V	8H70	E	1781	BFB	A	Y	23 teeth	07/02 ▸	06A121011TX	**506532**	CR	
2.4 i V6 30V	8H70	E	2393	BDV, AMM	M	Y		04/02 ▸	078121006	**506517**	SS	
2.4 i V6 30V	8H70	E	2393	BDV, AMM	A	Y		04/02 ▸	078121006	**506517**	SS	
3.0 i V6 30V	8H70	E	2976	BBJ, ASN	M	Y		04/02 ▸	06C121004H	**506781**	SS	
3.0 i V6 30V	8H70	E	2976	ASN, BBJ	A	Y		04/02 ▸	06C121004H	**506781**	SS	
2.5 TDI V6,2.5 TDI V6 24V	8H70	D	2496	BFC, BCZ, BDG	M	Y		08/02 ▸	059121004E	**506591**	SS	
2.5 TDI V6,2.5 TDI V6 24V	8H70	D	2496	BDG, BFC, BCZ	A	Y		08/02 ▸	059121004E	**506591**	SS	

A4 Cabriolet II (2006>)

2.0 TFSi 16V	8HE0	E	1984	BWE	M	Y	23 teeth	06/06 ▸	06F121011X	**506876**	CR	
2.0 TFSi 16V	8HE0	E	1984	BWE	A	Y	23 teeth	01/06 ▸	06F121011X	**506876**	CR	
3.2 FSi V6 24V	8HE0	E	3123	AUK	M	Y		01/06 ▸ 03/09	06E121005F	**506911**	N	
3.2 FSi V6 24V	8HE0	E	3123	AUK	A	Y		01/06 ▸ 03/09	06E121005F	**506911**	N	
2.0 TDi	8HE0	D	1968	BPW, BRC	M	Y		01/06 ▸	038121011J	**506872**	CR	
2.0 TDi	8HE0	D	1968	BPW, BRC	A	Y		01/06 ▸	038121011J	**506872**	CR	
2.7 TDi V6 24V	8HE0	D	2698	BPP	A	Y		06/06 ▸ 03/09	06E121005F	**506911**	N	
3.0 TDi V6 24V	8HE0	D	2967	ASB,BKN	M	Y		01/06 ▸ 03/09	06E121005F	**506911**	N	
3.0 TDi V6 24V	8HE0	D	2967	ASB,BKN	A	Y		01/06 ▸ 03/09	06E121005F	**506911**	N	

A5

2.7 TDi V6 24V	8T30, 8TA0	D	2698	CGKA/F	M	Y		06/08 ▸	06E121005F	**506911**	N	
2.7 TDi V6 24V	8T30, 8TA0	D	2698	CAMA,CGKA/F,CGKB/F	A	Y		07/07 ▸	06E121005F	**506911**	N	
3.0 TDi V6 24V	8T30, 8TA0	D	2967	CAPA,CCWA/F	M	Y		06/07 ▸	06E121005F	**506911**	N	
3.0 TDi V6 24V	8T30, 8TA0	D	2967	CAPA,CCWA/F,CCWB/F	A	Y		06/07 ▸	06E121005F	**506911**	N	

A5 Cabriolet (2009>)

2.7 TDI	8F70	D	2698	CGKA/F	M	Y		03/09 ▸	06E121005F	**506911**	N	
2.7 TDI	8F70	D	2698	CGKA/F,CGKB/F	A	Y		05/09 ▸	06E121005F	**506911**	N	
3.0 TDI	8F70	D	2967	CCWA/F	A	Y		03/09 ▸	06E121005F	**506911**	N	

A6 (94>97)

1.8 E 20V,1.8 i 20V	4A2/0/H, 4A5/0/H	E	1781	ADR	M	Y		07/95 ▸ 09/97	050121010C	**506603**	N	506594
1.8 E 20V	4A2/0/H, 4A5/0/H	E	1781	ADR	A	Y		07/95 ▸ 09/97	050121010C	**506603**	N	506594
2.0 E,2.0 E 16V,2.0 i 2.0 i 16V	4A20, 4A50	E	1984	ABK, AAE, ACE, ADW	M	Y		06/94 ▸ 09/97	037121010C	**506667**	N	506666
2.0 E	4A20, 4A50	E	1984	ABK, ADW	A	Y		07/94 ▸ 09/97	037121010C	**506667**	N	506666
2.3 E,2.3 i	4A20, 4A50	E	2309	AAR	M	Y		07/94 ▸ 06/95	054121004A	**506336**	CR	
2.4 i V6	4A20, 4A50	E	2393	AFM	A	Y		07/95 ▸ 09/97	078121004Q	**506517**	SS	
2.6 E V6	4A20, 4A50	E	2598	ABC, ACZ	M	Y		08/94 ▸ 09/97	078121006	**506517**	SS	
4A-S-026 715 ▸												
2.6 E V6	4A20, 4A50	E	2598	ABC, ACZ	A	Y		08/94 ▸ 09/97	078121006	**506517**	SS	
4A-S-026 715 ▸												
2.6 E V6	4A20, 4A50	E	2598	ABC	M	Y		06/94 ▸ 08/94	078121004C	**506442**	SS	
▸ 4A-S-026 714												
2.6 E V6	4A20, 4A50	E	2598	ABC	A	Y		06/94 ▸ 08/94	078121004C	**506442**	SS	
▸ 4A-S-026 714												

• **New** Nouveau **Nuevo** Novo **Nuovo** Nieuw **Neu** Yeni Новый Nou

Valeo

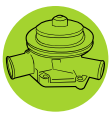

		Type Ctr.		cc					OE	Valeo		
AUDI (.../...)												
A6 (94>97) (.../...)												
2.8 E V6,2.8 E V6 30V 2.8 i V6 4A-S-026 715 ▸	*4A20, 4A50*	E	2771	AAH, AEJ, ACK	M	Y		08/94 ▸ 09/97	078121006	**506517**	SS	
2.8 E V6,2.8 E V6 30V 2.8 i V6 4A-S-026 715 ▸	*4A20, 4A50*	E	2771	ACK, AAH, AEJ	A	Y		08/94 ▸ 09/97	078121006	**506517**	SS	
2.8 i V6 ▸ 4A-S-026 714	*4A20, 4A50*	E	2771	AAH	M	Y		06/94 ▸ 08/94	078121004C	**506442**	SS	
2.8 i V6 ▸ 4A-S-026 714	*4A20, 4A50*	E	2771	AAH	A	Y		06/94 ▸ 08/94	078121004C	**506442**	SS	
1.9 TDi	*4A20, 4A50*	D	1896	AHU, 1Z	M	Y		07/94 ▸ 09/97	037121010C	**506667**	N	506666
1.9 TDi	*4A20, 4A50*	D	1896	1Z, AHU	A	Y		07/94 ▸ 09/97	037121010C	**506667**	N	506666
2.5 TDi	*4A50, 4A2/0/H*	D	2460	AEL, AAT	M	Y	20 teeth	07/94 ▸ 09/97	074121005MX	▲**506920**	CR	
2.5 TDi	*4A50, 4A2/0/H*	D	2460	AEL, AAT	A	Y	20 teeth	07/94 ▸ 09/97	074121005N	▲**506920**	CR	
A6 (97>2001)												
1.8 i Turbo 20V	*4B20*	E	1781	AWT	A	Y	23 teeth	09/00 ▸ 05/01	06A121011TX	**506532**	CR	
1.8 i Turbo 20V ▸ 4B-Y-200 000	*4B20*	E	1781	APU, ARK	M	Y		11/98 ▸ 04/00	078121004Q	**506517**	SS	
1.8 i Turbo 20V ▸ 4B-Y-200 000	*4B20*	E	1781	APU	A	Y		11/98 ▸ 04/00	078121004Q	**506517**	SS	
1.8 i 20V,1.8 i Turbo 20V ▸ W-169000	*4B2/0/H, 4B5/0/H*	E	1781	AEB, AJL, AFY, AJP, ARK, APU ANB	M	Y		04/97 ▸ 05/01	050121010AX	**506603**	N	506594
1.8 i 20V,1.8 i Turbo 20V ▸ W-169000	*4B2/0/H, 4B5/0/H*	E	1781	AEB, AJP, AFY, ANB, ARK, APU	A	Y		04/97 ▸ 06/98	050121010AX	**506603**	N	506594
2.4 i V6,2.4 i V6 30V ▸ 4B-Y-200 000	*4B2/0/H, 4B5/0/H*	E	2393	AGA, APS, AJG, ARJ, APZ, APC ALW, ARN, ALF, ASM	M	Y		04/97 ▸ 05/01	078121006	**506517**	SS	
2.4 i V6,2.4 i V6 30V ▸ 4B-Y-200 000	*4B2/0/H, 4B5/0/H*	E	2393	AGA, ALF, APS, ARJ, APC, AJG APZ	A	Y		04/97 ▸	078121006	**506517**	SS	
2.7 i V6 Bi turbo	*4B20, 4B50*	E	2671	AZA, AJK	A	Y		02/99 ▸ 05/01	078121006A	**506792**	SS	
2.7 i V6 Bi Turbo ▸ 4B-Y-200 000	*4B2/0/H, 4B5/0/H*	E	2671	AJK, AZA	M	Y		01/98 ▸ 05/01	078121006A	**506792**	SS	
2.7 i V6 Bi turbo ▸ 4B-Y-200 000	*4B2/0/H, 4B5/0/H*	E	2671	AJK	M	Y		03/98 ▸ 04/00	078121004Q	**506517**	SS	
2.7 i V6 Bi turbo ▸ 4B-Y-200 000	*4B20, 4B50*	E	2671	AJK	A	Y		02/99 ▸ 04/00	078121004Q	**506517**	SS	
2.8 i V6 30V ▸ 4B-Y-200 000	*4B2/0/H, 4B5/0/H*	E	2771	ACK, AQD, AGE, APR, ALG, AMX	M	Y		04/97 ▸ 05/01	078121006	**506517**	SS	
2.8 i V6 30V ▸ 4B-Y-200 000	*4B2/0/H, 4B5/0/H*	E	2771	AGE, ALG, APR, ACK, AQD, AMX	A	Y		04/97 ▸ 05/01	078121006	**506517**	SS	
4.2 i V8 40V	*4B40, 4B60*	E	4172	ARS, ASG	A	Y		04/99 ▸ 05/01	077121004M	**506794**	SS	
1.9 TDi	*4B50*	D	1896	AJM	M	Y		11/00 ▸ 07/98	038121011CX	**506871**	CR	
1.9 TDi	*4B2/0/H, 4B5/0/H*	D	1896	AFN, AVG, AJM	M	Y		04/97 ▸ 05/01	028121004	**506513**	N	
1.9 TDi	*4B2/0/H, 4B5/0/H*	D	1896	AFN, AJM, AVG	A	Y		04/97 ▸ 05/01	028121004	**506513**	N	
1.9 TDi	*4B50*	D	1896	AJM	A	Y		01/98 ▸ 05/01	038121011CX	**506871**	CR	
2.5 TDi V6 24V	*4B20, 4B50*	D	2496	AKN, AFB	M	Y		07/97 ▸ 06/99	059121004E	**506591**	SS	
2.5 TDi V6 24V	*4B20, 4B50*	D	2496	AKN, AFB	A	Y		08/98 ▸ 06/99	059121004E	**506591**	SS	
A6 (2001>2004)												
1.8 i Turbo 20V	*4B20, 4B50*	E	1781	AWT	M	Y	23 teeth	06/01 ▸	06A121011LX	**506532**	CR	
1.8 i Turbo 20V	*4B20, 4B50*	E	1781	AWT	A	Y	23 teeth	06/01 ▸	06A121011LX	**506532**	CR	
2.4 i V6 30V ▸ 4B-2-120 000	*4B20, 4B50*	E	2393	BDV, AMM, ASM	M	Y		06/01 ▸	078121006	**506517**	SS	
2.4 i V6 30V 4B-2-120 001 ▸ 4B-2-120 000	*4B20, 4B50*	E	2393	BDV, AMM	A	Y		06/01 ▸	078121006	**506517**	SS	
2.7 i V6 Bi Turbo ▸ 4B-2-120 000	*4B20, 4B50*	E	2671	ARE, BES	M	Y		06/01 ▸	078121006A	**506792**	SS	
2.7 i V6 Bi Turbo 4B-2-120 001 ▸ 4B-2-120 000	*4B20, 4B50*	E	2671	ARE, BES	A	Y		06/01 ▸	078121006A	**506792**	SS	
3.0 i V6 30V	*4B20, 4B50*	E	2976	ASN, BBJ	M	Y		06/01 ▸	06C121004H	**506781**	SS	
3.0 i V6 30V	*4B20, 4B50*	E	2976	ASN, BBJ	A	Y		06/01 ▸	06C121004H	**506781**	SS	
4.2 i V8 40V	*4B40, 4B60*	E	4172	ASG	A	Y		06/01 ▸	077121004M	**506794**	SS	
1.9 TDi	*4B20, 4B50*	D	1896	AVF, AWX	M	Y		06/01 ▸	038121011CX	**506871**	CR	

• **New** Nouveau **Nuevo** Novo **Nuovo** Nieuw **Neu** Yeni Новый Nou

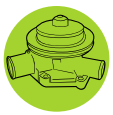

Valeo

Water pump
Pompe à eau
Bomba de água
Bomba de água
Pompa acqua
Waterpomp
Wasserpumpen
Pompa wodna
Vízpumpa
Su pompasi
ВОДЯНОЙ НАСОС
Vodní pumpa
Pompa de apă

Type Ctr.	cc					OE	Valeo		
AUDI (.../...)									
A6 (2001>2004) (.../...)									
1.9 TDi 4B-2-125 001 ▸	*4B20, 4B50*	D	1896	AWX, AVF	M	Y		04/02 ▸ 01/05	038121011J	**506872**	CR	
1.9 TDi 4B-2-125 001 ▸	*4B20, 4B50*	D	1896	AVF, AWX	A	Y		04/02 ▸ 01/05	038121011J	**506872**	CR	
1.9 TDi ▸ 4B-2-125 000	*4B20, 4B50*	D	1896	AVF, AWX	A	Y		06/01 ▸	038121011CX	**506871**	CR	
2.5 TDi V6,2.5 TDi V6 24V	*4B20, 4B50*	D	2496	AKE, BDH, BCZ, BDG, AYM, BFC BAU	M	Y		06/01 ▸	059121004E	**506591**	SS	
2.5 TDi V6,2.5 TDi V6 24V	*4B20, 4B50*	D	2496	BDG, BFC, AKE, BCZ, BAU, AYM BDH	A	Y		06/01 ▸	059121004E	**506591**	SS	
A6 (2004>2008)												
2.0 TFSi 16V	*4F20, 4F50*	E	1984	BPJ	M	Y	23 teeth	06/05 ▸	06F121011X	**506876**	CR	
2.0 TFSi 16V	*4F50*	E	1984	BPJ	A	Y	23 teeth	12/05 ▸	06F121011X	**506876**	CR	
2.4 i V6 24V	*4F20, 4F50*	E	2393	BDW	M	Y		04/04 ▸ 09/08	06E121005F	**506911**	N	
2.4 i V6 24V	*4F20, 4F50*	E	2393	BDW	A	Y		07/04 ▸ 09/08	06E121005F	**506911**	N	
3.0 V6 30V	*4F20, 4F50*	E	2976	BBJ	A	Y		04/04 ▸	06C121004H	**506781**	SS	
3.2 FSi V6 24V	*4F20, 4F50*	E	3123	AUK	M	Y		04/04 ▸ 09/08	06E121005F	**506911**	N	
3.2 FSi V6 24V	*4F20, 4F50*	E	3123	AUK	A	Y		04/04 ▸ 09/08	06E121005F	**506911**	N	
2.0 TDi 16V 4F-6-129 001 ▸	*4F20, 4F50*	D	1968	BRE	A	Y		12/05 ▸	038121011K	**506699**	CR	
2.0 TDi 16V 4F-6-129 001 ▸ 4F-6-129 000	*4F20, 4F50*	D	1968	BRE, BLB, BVG, BRF, BNA	M	Y		07/04 ▸	038121011K	**506699**	CR	
2.7 TDi V6 24V	*4F20, 4F50*	D	2698	BPP,BSG	M	Y		11/04 ▸ 09/08	06E121005F	**506911**	N	
2.7 TDi V6 24V	*4F20, 4F50*	D	2698	BPP,BSG	A	Y		06/05 ▸ 09/08	06E121005F	**506911**	N	
3.0 TDi V6 24V	*4F20, 4F50*	D	2967	ASB,BMK,BNG	M	Y		01/05 ▸ 09/08	06E121005F	**506911**	N	
3.0 TDi V6 24V	*4F20, 4F50*	D	2967	ASB,BMK,BNG	A	Y		04/04 ▸ 09/08	06E121005F	**506911**	N	
A6 (2008>)												
2.0 TFSI 16V	*4F20, 4F50*	E	1984	BPJ	M	Y	23 teeth	10/08 ▸	06F121011X	**506876**	CR	
2.0 TFSI 16V	*4F20, 4F50*	E	1984	BPJ	A	Y	23 teeth	10/08 ▸	06F121011	**506876**	CR	
3.0 TFSI V6 24V	*4F2/0/5, 4F5/0/5*	E	2995	CAJA,CCAA	A	Y		10/08 ▸	06E121005N	**506911**	N	
2.7 TDI V6 24V	*4F20, 4F50*	D	2698	CANC/F,CAND/F	M	Y		10/08 ▸	06E121005F	**506911**	N	
2.7 TDI V6 24V	*4F20, 4F50*	D	2698	CANC/F,CAND/F	A	Y		10/08 ▸	06E121005F	**506911**	N	
3.0 TDI V6 24V	*4F20, 4F50*	D	2967	CDYA/F	M	Y		10/08 ▸	06E121005F	**506911**	N	
3.0 TDI V6 24V	*4F20, 4F50*	D	2967	CDYA/F,CDYB/F	A	Y		10/08 ▸	06E121005F	**506911**	N	
A6 Allroad (2000>2005)												
2.7 i V6 Turbo	*4BH0*	E	2671	BES, ARE	M	Y		05/00 ▸	078121006A	**506792**	SS	
2.7 i V6 Turbo	*4BH0*	E	2671	BES, ARE	A	Y		05/00 ▸	078121006A	**506792**	SS	
2.5 TDi V6 24V	*4BH0*	D	2496	BAU, AKE, BCZ	M	Y		05/00 ▸	059121004E	**506591**	SS	
2.5 TDi V6 24V	*4BH0*	D	2496	AKE, BAU	A	Y		05/00 ▸	059121004E	**506591**	SS	
A6 Allroad (2006>2008)												
3.2 FSi V6 24V	*4FH0*	E	3123	AUK	M	Y		05/06 ▸ 10/08	06E121005F	**506911**	N	
3.2 FSi V6 24V	*4FH0*	E	3123	AUK	A	Y		05/06 ▸ 10/08	06E121005F	**506911**	N	
2.7 TDi V6 24V	*4FH0*	D	2698	BPP,BSG	A	Y		05/06 ▸ 10/08	06E121005F	**506911**	N	
3.0 TDi V6 24V	*4FH0*	D	2967	ASB,BNG	M	Y		05/06 ▸ 10/08	06E121005F	**506911**	N	
3.0 TDi V6 24V	*4FH0*	D	2967	ASB,BNG	A	Y		05/06 ▸ 10/08	06E121005F	**506911**	N	
A6 Allroad (2008>)												
3.0 TFSi V6 24V	*4FH0*	E	2995	CAJA	A	Y		10/08 ▸	06E121005N	**506911**	N	
2.7 TDi V6 24V	*4FH0*	D	2698	CANC/F,CAND/F	A	Y		10/08 ▸	06E121005F	**506911**	N	
3.0 TDi V6 24V	*4FH0*	D	2967	CDYA/F	M	Y		10/08 ▸	06E121005F	**506911**	N	
3.0 TDi V6 24V	*4FH0*	D	2967	CDYA/F,CDYB/F	A	Y		10/08 ▸	06E121005F	**506911**	N	
A8 (94>2002)												
2.8 i V6 ▸ S000496	*4D2G*	E	2771	AAH	M	Y		06/94 ▸ 09/94	078121004C	**506442**	SS	
2.8 i V6 ▸ S000496	*4D2G*	E	2771	AAH	A	Y		06/94 ▸ 09/94	078121004C	**506442**	SS	
2.8 E V6,2.8 E V6 30V 2.8 i V6 S-000 497 ▸ Y-020 000	*4D2G*	E	2771	AEJ, AAH, ACK, APR, AQD, AMX ALG	M	Y		08/94 ▸ 12/98	078121006	**506517**	SS	

• **New** Nouveau **Nuevo** Novo **Nuovo** Nieuw **Neu** Yeni Новый Nou

Valeo

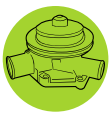

Type Ctr.		CC						OE	Valeo		
AUDI (.../...)											
A8 (94>2002) (.../...)											
2.8 E V6,2.8 E V6 30V 2.8 i V6 S000497 ▸ Y-020 000	4D2G	E	2771	AEJ, AAH, ALG, ACK, AQD, APR AMX	A	Y		08/94 ▸ 12/98	078121006	**506517**	SS	
3.7 i V8	4D2G	E	3697	AKJ, AEW	A	Y		07/95 ▸ 12/98	077121004H	**506602**	SS	
A8 (94>2006)											
3.7 i V8	4D2G	E	3697	AQG, AKC	A	Y		10/98 ▸ 05/06	077121004M	**506794**	SS	
A8 (94>2002)											
4.2 i V8,4.2 i V8 32V	4D2G	E	4172	AGH, AKG, ABZ, AEM	A	Y		06/94 ▸ 12/98	077121004H	**506602**	SS	
A8 (94>2006)											
4.2 i V8,4.2 i V8 32V	4D8G, 4D2/2/G	E	4172	AQF, ARU, AUW, ABZ	A	Y		10/98 ▸ 05/06	077121004M	**506794**	SS	
A8 (94>2002)											
2.5 TDi V6 24V	4D2G	D	2496	AFB, AKN, AKE	M	Y		06/97 ▸ 01/99	059121004E	**506591**	SS	
2.5 TDi V6 24V	4D2G	D	2496	AKE, AKN, AFB	A	Y		06/97 ▸ 09/02	059121004E	**506591**	SS	
A8 (2002>2007)											
3.0 i V6 30V	4E20, 4E80	E	2976	BBJ, ASN	A	Y		07/03 ▸	06C121004H	**506781**	SS	
3.2 FSi V6 24V	4E20, 4E80	E	3123	BPK	A	Y		06/05 ▸	06E121005F	**506911**	N	
3.7 i V8 40V	4E20	E	3697	BFL	A	Y		11/02 ▸ 05/06	077121004P	**506794**	SS	
A8 (2007>)											
3.2 FSi V6 24V	4E20, 4E80	E	3123	BPK	A	Y		09/07 ▸	06E121005N	**506911**	N	
4.2 i V8 32V	4E20, 4E80	E	4163	BVJ	A	Y		06/06 ▸	077121004P	**506794**	SS	
3.0 TDi V6 24V	4E20, 4E80	D	2967	ASB,BNG	A	Y		09/07 ▸	06E121005F	**506911**	N	
Cabriolet											
1.8 E 20V	8G70	E	1781	ADR	M	Y		04/97 ▸ 07/98	050121010C	**506603**	N	506594
1.8 E 20V	8G70	E	1781	ADR	M	Y		04/97 ▸ 07/98	026121005L	**506667**	N	506666
1.8 E 20V	8G70	E	1781	ADR	A	Y		04/97 ▸	050121010C	**506603**	N	506594
1.8 E 20V	8G70	E	1781	ADR	A	Y		04/97 ▸	026121005L	**506667**	N	506666
2.0 E,2.0 E 16V	8G70	E	1984	ABK, ACE	M	Y		01/93 ▸	037121010C	**506667**	N	506666
2.0 E	8G70	E	1984	ABK	M	Y		01/97 ▸	050121010A	**506603**	N	506594
2.3 E	8G70	E	2309	NG	M	Y		06/91 ▸ 07/94	034121004X	**506132**	CR	
2.3 E	8G70	E	2309	NG	M	Y		06/91 ▸ 07/94	054121004A	**506336**	CR	
2.3 E	8G70	E	2309	NG	A	Y		06/91 ▸ 09/91	054121004A	**506336**	CR	
2.3 E	8G70	E	2309	NG	A	Y		06/91 ▸ 07/94	034121004X	**506132**	CR	
2.6 E V6 S001303 ▸	8G70	E	2598	ABC, ACZ	M	Y		09/94 ▸ 07/96	078121006	**506517**	SS	
2.6 E V6 8G-S-001 303 ▸	8G70	E	2598	ABC, ACZ	A	Y		09/94 ▸ 12/95	078121006	**506517**	SS	
2.6 E V6 ▸ S001302	8G70	E	2598	ABC	M	Y		01/94 ▸ 08/94	078121004C	**506442**	SS	
2.6 E V6 ▸ S001302	8G70	E	2598	ABC	A	Y		01/94 ▸ 09/94	078121004C	**506442**	SS	
2.8 i V6 8G-S-001 303 ▸	8G70	E	2771	AAH	M	Y		09/94 ▸ 08/94	078121006	**506517**	SS	
2.8 i V6 S001303 ▸	8G70	E	2771	AAH	A	Y		09/94 ▸ 12/94	078121006	**506517**	SS	
2.8 i V6 ▸ S001302	8G70	E	2771	AAH	M	Y		11/92 ▸ 08/94	078121004C	**506442**	SS	
2.8 i V6 ▸ S001302	8G70	E	2771	AAH	A	Y		01/93 ▸ 09/94	078121004C	**506442**	SS	
1.9 TDi	8G70	D	1896	AHU, 1Z	M	Y		07/95 ▸ 12/99	037121010C	**506667**	N	506666
Coupé (80>88)											
1.6	8550, 8560	E	1588	YN, DD	M	Y		02/81 ▸ 08/82	026121010CX	**506667**	N	506666
1.6	8550	E	1588	YN, DD	A	Y		02/81 ▸ 08/82	026121010CX	**506667**	N	506666
1.8,1.8 i	855/0/3/J/K, 856/0/3	E	1781	DS, DZ, SF, JN, JV	M	Y		09/82 ▸ 07/88	026121010CX	**506667**	N	506666
1.8,1.8 i	855/0/3/J/K	E	1781	DS, JV, JN, SF	A	Y		09/82 ▸ 07/88	026121010CX	**506667**	N	506666
1.9	8553, 8563	E	1921	WN	M	Y		10/80 ▸ 08/83	035121004AX	**506190**	CR	

• **New** Nouveau **Nuevo** Novo **Nuovo** Nieuw **Neu** Yeni Новый Nou

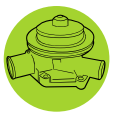

Valeo

Water pump
Pompe à eau
Bomba de água
Bomba de água
Pompa acqua
Waterpomp
Wasserpumpen
Pompa wodna
Vízpumpa
Su pompasi
ВОДЯНОЙ НАСОС
Vodní pumpa
Pompa de apă

			cc					OE	Valeo			
AUDI (.../...)												
Coupé (80>88) (.../...)												
1.9	*8553, 8563*	E	1921	WN	A	Y		10/80 ▸ 08/83	035121004AX	**506190**	CR	
2.0 i	*8563, 855/3/K*	E	1994	JS, HP	M	Y		08/83 ▸ 07/86	035121004AX	**506190**	CR	
2.0 i	*8563, 855/3/K*	E	1994	JL, JS, HP	A	Y		08/83 ▸ 07/87	035121004AX	**506190**	CR	
2.2 i	*8553, 8563*	E	2144	WE, KL, KE	M	Y		08/81 ▸ 08/84	035121004AX	**506190**	CR	
2.2 i	*8553*	E	2144	WE	A	Y		04/81 ▸ 08/83	035121004AX	**506190**	CR	
2.2,2.2 i	*8563, 855/3/9/K*	E	2226	HY, KV, KX, JT	M	Y		08/84 ▸ 07/88	035121004AX	**506190**	CR	
2.2 i	*8563, 855/3/9/K*	E	2226	KV, HY, KX	A	Y		08/84 ▸ 07/88	035121004AX	**506190**	CR	
2.3 E,2.3 i	*855K*	E	2309	NG	M	Y		01/87 ▸ 07/88	035121004AX	**506190**	CR	
2.3 i	*855K*	E	2309	NG	M	Y		02/87 ▸ 07/88	034121004A	**506132**	CR	
2.3 i	*855K*	E	2309	NG	A	Y		02/87 ▸ 07/88	035121004AX	**506190**	CR	
2.3 i	*855K*	E	2309	NG	A	Y		02/87 ▸ 07/88	034121004A	**506132**	CR	
Coupé (88>96)												
1.8 E	*8B30*	E	1781	DZ	M	Y		08/89 ▸ 07/91	037121010C	**506667**	N	506666
2.0 E,2.0 E 16V,2.0 i 2.0 i 16V	*8B30*	E	1984	ACE, AAD, ABK, 6A, 3A	M	Y		08/89 ▸ 01/96	037121010C	**506667**	N	506666
2.0 E,2.0 i	*8B30*	E	1984	ABK, 3A, AAD	A	Y		08/89 ▸ 01/96	037121010C	**506667**	N	506666
2.0 E 20V	*8B30*	E	1994	NM	M	Y		11/88 ▸ 07/91	034121005D	**506132**	CR	
2.2 i	*8B30*	E	2226	KV	M	Y		11/88 ▸ 07/91	034121004X	**506132**	CR	
2.3 E 3001 ▸	*8B30*	E	2309	NG	M	Y		▸ 07/94	054121004A	**506336**	CR	
2.3 Turbo 20V	*8B30*	E	2309	3B	M	Y		08/90 ▸ 07/93	035121004	**506190**	CR	
2.3 E,2.3 i 20V	*8B30*	E	2309	NG, 7A	A	Y		08/89 ▸ 05/94	034121004X	**506132**	CR	
2.3 E,2.3 Turbo 20V 2.3 i 20V ▸ M033000	*8B30*	E	2309	NG, 7A, 3B	M	Y		11/88 ▸	034121004X	**506132**	CR	
2.6 E V6	*8B30*	E	2598	ABC	M	Y		08/92 ▸ 01/96	078121004C	**506442**	SS	
2.6 E V6	*8B30*	E	2598	ABC	A	Y		08/92 ▸ 01/96	078121004C	**506442**	SS	
2.8 i V6	*8B30*	E	2771	AAH	M	Y		08/91 ▸ 05/95	078121004C	**506442**	SS	
2.8 i V6	*8B30*	E	2771	AAH	A	Y		09/91 ▸ 03/95	078121004C	**506442**	SS	
Q5												
3.0 TDI V6 24V	*8RB0*	D	2967	CCWA/F,CCWB/F	A	Y		11/08 ▸	06E121005F	**506911**	N	
Q7												
3.0 TDi V6,3.0 TDi V6 24V 3.0 TDi V6 DPF	*4LB0*	D	2967	BUG,BUN,CASA/F,CASD/F,CCMA/F	A	Y		03/06 ▸	06E121005F	**506911**	N	
Quattro												
2.2 i Turbo	*8572, 8591*	E	2144	KW, WX	M	Y		05/84 ▸ 07/89	034121005D	**506132**	CR	
2.2 i Turbo 85-J-900 644 ▸	*8591, 857/0/1/2/3*	E	2144	KW, GV, WR, WX	A	Y		07/80 ▸ 07/89	034121004X	**506132**	CR	
2.2 i Turbo ▸ 85-J-900 643	*857/2/6/7*	E	2144	WX, WR	A	Y		08/80 ▸ 06/88	035121004AX	**506190**	CR	
2.2 i Turbo ▸ J900643	*8591, 857/0/1/2/3/6/7*	E	2144	WR, WX, GV, KW	M	Y		07/80 ▸	035121005E	**506190**	CR	
2.3 i Turbo 2.3 i Turbo 20V 85-J-900 644 ▸	*857/0/1*	E	2226	RR, MB	M	Y		06/88 ▸ 07/91	034121005D	**506132**	CR	
2.3 i Turbo 2.3 i Turbo 20V 85-J-900 644 ▸	*857/0/1*	E	2226	MB, RR	A	Y		06/88 ▸ 07/91	034121004X	**506132**	CR	
2.3 i Turbo ▸ 85-J-900 643	*857/0/1*	E	2226	MB	A	Y		08/87 ▸ 06/88	035121004AX	**506190**	CR	
2.3 i Turbo ▸ J900643	*857/0/1*	E	2226	MB	M	Y		08/87 ▸	035121005E	**506190**	CR	
RS4 Quattro (2000>2001)												
2.7 i V6 Bi Turbo 30V	*8D50*	E	2671	ASJ	M	Y		06/00 ▸ 10/00	078121006A	**506792**	SS	
2.8 i V6 Bi Turbo 30V	*8D50*	E	2771	AZR	M	Y		11/00 ▸ 04/01	078121006A	**506792**	SS	
2.8 i V6 Bi Turbo 30V	*8D50*	E	2771	AZR	A	Y		04/01 ▸ 09/01	078121006A	**506792**	SS	
RS6												
4.2 i V8 40V	*4B40, 4B60*	E	4172	BCY,BRV	A	Y		07/02 ▸ 09/04	077121004N	**506794**	SS	

• **New** Nouveau **Nuevo** Novo **Nuovo** Nieuw **Neu** Yeni Новый Nou

Valeo

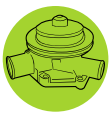

Type Ctr.		cc						OE	Valeo		
AUDI (.../...)											
S3 (98>2003)											
1.8 i Turbo 20V *8L1/B/S*	E	1781	AMK, APY, BAM	M	Y	23 teeth	08/01 ▸	06A121011T	**506532**	CR	
1.8 i Turbo 20V *8L1S*	E	1781	BAM	A	Y	23 teeth	08/01 ▸ 06/03	06A121011T	**506532**	CR	
S3 (2006>)											
2.0 TFSi 16V *8P1S*	E	1984	BHZ	M	Y	23 teeth	10/06 ▸	06F121011X	**506876**	CR	
2.0 TFSi 16V *8P1S*	E	1984	BHZ	A	Y	23 teeth	10/06 ▸	06F121011X	**506876**	CR	
S4 (97>99)											
2.7 i V6 Bi Turbo 30V *8D50, 8D2/0/5*	E	2671	AGB, APB	M	Y		10/97 ▸ 01/99	078121006A	**506792**	SS	
2.7 i V6 Bi Turbo 30V *8D25*	E	2671	APB	A	Y		08/98 ▸ 01/99	078121006A	**506792**	SS	
S4 (99>2001)											
2.7 i V6 30V *8D20, 8D50*	E	2671	AGB	M	Y		02/99 ▸	078121006A	**506792**	SS	
S6 (94>97)											
2.2 i Turbo 20V *4A28, 4A58*	E	2226	AAN	M	Y		07/94 ▸	054121004A	**506336**	CR	
2.2 i Turbo 20V *4A28, 4A58*	E	2226	AAN	A	Y		07/94 ▸	054121004A	**506336**	CR	
4.2 i V8 32V *4A28, 4A58*	E	4172	AEC	M	Y		07/94 ▸	077121004F	**506602**	SS	
4.2 i V8 32V *4A28, 4A58*	E	4172	AEC	A	Y		07/94 ▸	077121004F	**506602**	SS	
S6 (99>2001)											
4.2 i V8 40V *4B40, 4B60*	E	4172	AQJ, ANK	M	Y		09/99 ▸	077121004M	**506794**	SS	
4.2 i V8 40V *4B40, 4B60*	E	4172	AQJ, ANK	A	Y		09/99 ▸ 05/01	077121004M	**506794**	SS	
S6 (2001>2005)											
4.2 i V8 40V *4B40, 4B60*	E	4172	ANK	A	Y		06/01 ▸	077121004M	**506794**	SS	
S8 (96>98)											
4.2 i V8 *4D2G*	E	4172	AKH, AHC	M	Y		09/96 ▸ 12/98	077121004H	**506602**	SS	
4.2 i V8 *4D2G*	E	4172	AKH, AHC	A	Y		08/97 ▸ 12/98	077121004H	**506602**	SS	
S8 (99>2002)											
4.2 i V8 *4D2G*	E	4172	AVP, AQH	M	Y		05/99 ▸ 09/02	077121004M	**506794**	SS	
4.2 i V8 *4D2G*	E	4172	BCS, AQH, AVP, AYS	A	Y		05/99 ▸ 09/02	077121004M	**506794**	SS	
TT (98>2006)											
1.8 i Turbo 20V *8N30, 8N90*	E	1781	ARY, AJQ, APP, BAM, AUM, AUQ APX, BFV	M	Y	23 teeth	10/98 ▸	06A121011T	**506532**	CR	
1.8 i Turbo 20V *8N30, 8N90*	E	1781	AUQ, BAM, ARY, BFV	A	Y	23 teeth	09/00 ▸	06A121011T	**506532**	CR	
3.2 i V6 *8N30*	E	3189	BHE	M	Y	23 teeth	04/03 ▸	06A121011L	**506532**	CR	
3.2 i V6 *8N30, 8N90*	E	3189	BHE	M	Y		07/03 ▸	022121011	**506798**	N	
3.2 i V6 *8N30, 8N90*	E	3189	BHE	A	Y		07/03 ▸	022121011	**506798**	N	
TT (2006>)											
2.0 TFSi 16V *8J30, 8J90*	E	1984	BWA	M	Y	23 teeth	08/06 ▸	06F121011X	**506876**	CR	
2.0 TFSi 16V *8J30, 8J90*	E	1984	BWA	A	Y	23 teeth	08/06 ▸	06F121011X	**506876**	CR	
3.2 i V6 24V *8J30, 8J90*	E	3189	BUB	M	Y		08/06 ▸	022121011	**506798**	N	
3.2 i V6 24V *8J30, 8J90*	E	3189	BUB	A	Y		08/06 ▸	022121011	**506798**	N	
V8											
3.6 i V8 32V *441G, 4C2G*	E	3562	PT	M	Y		01/90 ▸ 07/93	077121004A	**506644**	SS	
3.6 i V8 32V *441/G, 4C2G, 442/5/G*	E	3562	PT, PT-K	A	Y		10/88 ▸ 07/93	077121004A	**506644**	SS	
4.2 i V8 32V *4C2G*	E	4172	ABH	M	Y		10/91 ▸ 07/93	077121004A	**506644**	SS	
4.2 i V8 32V *4C2G*	E	4172	ABH	A	Y		10/91 ▸ 07/93	077121004A	**506644**	SS	
AUTOBIANCHI											
A112											
903 *A112B*	E	903	A112A000, A112A200	M	Y		10/69 ▸ 10/86	5939200	**506079**	V	
965 *A112B*	E	965	A112B1000	M	Y		10/69 ▸ 10/86	5939200	**506079**	V	
982 *A112A*	E	982	A112A1000	M	Y		09/71 ▸ 1975	5939200	**506079**	V	

• **New** Nouveau **Nuevo** Novo **Nuovo** Nieuw **Neu** Yeni Новый Nou

		Type Ctr.		cc					OE	Valeo		
AUTOBIANCHI (.../...)												
A112 (.../...)												
1050	*A112B*	E		1049	A112AB2C0	M	Y		06/75 ▸ 1985	5939200	**506079**	V
Y10												
1.0,1.0 ie,1000	*156B1, 156A, 156AE, 156AA 156E, 156AD, 156B*	E		999	156A2.000, 156A2.246 156A3.000, 156A2.100	M	N		07/85 ▸ 09/92	46423351	**506397**	CR
1050,1050 Turbo	*156D, 156D1, 156C, 156C1*	E		1049	156A1.000, 156A.000	M	Y		07/85 ▸ 12/88	5890406	**506063**	N
1.1 ie	*156AG, 156AC, 156CG 156BG*	E		1108	156C.046, 176B2.000, 156C.000	M	N		01/89 ▸ 10/95	46423351	**506397**	CR
1.1 ie	*156AG, 156AC*	E		1108	156C.046, 156C.000, 176B2.000	A	N		11/89 ▸ 10/95	46423351	**506397**	CR
1.3	*156AF*	E		1297	146A5.046	M	Y		01/89 ▸ 1995	5890406	**506063**	N
1.3	*156AB*	E		1301	156B.000	M	Y		01/89 ▸ 09/92	5890406	**506063**	N
BEDFORD												
Brava												
2.5 D	*TFS54, TFR54*	D		2499	25D	M	Y		10/88 ▸ 06/90	97062796	**506346**	V
BMW												
2500 / 3300 (3.3)												
2.5,2500		E		2494	125	M	Y		08/68 ▸ 02/77	11519070757	**506070**	N
2500		E		2494	125	A	Y		08/68 ▸ 02/77	11519070757	**506070**	N
1 series E87												
116i	*UF/11/12*	E		1596	N45B16	M	N		09/04 ▸ 12/06	11517511221	**506919**	N
116i	*UF/21/22*	E		1596	N45B16	A	N		09/04 ▸ 12/06	11517511221	**506919**	N
118i,120i	*UF/31/32/51/52*	E		1995	N46B/20O1/20U1	M	N		09/04 ▸ 12/06	11517511221	**506919**	N
118i,120i	*UF/41/42/61/62*	E		1995	N46B/20U1/2001	A	N		09/04 ▸ 12/06	11517511221	**506919**	N
1 series E87 LCI												
1.6 i 16V	*UE/11/12*	E		1596	N45B16	M	N		03/07 ▸ 08/07	11517511221	**506919**	N
3 series E21												
315,316	*17/01/02, 27/11/12/51/52 91/92*	E		1573	M10B16V, 1600	M	Y		06/75 ▸ 12/83	11511258933	**506069**	N
316,318,318i	*17/11/12/31/32, 28/11/51 91*	E		1766	M10B/18/18K/18V, 118/4	M	Y		06/75 ▸ 12/83	11511258933	**506069**	N
316,318,318i	*17/21/22/41/42, 28/21/61 93*	E		1766	M10B///18V, 118////4, M10B/18K/18	A	Y		07/75 ▸ 07/83	11511258933	**506069**	N
320/4	*29/21/22, 31/61/62*	E		1990	E21	A	Y		07/75 ▸ 07/79	11511258933	**506069**	N
320/6	*18/21/22*	E		1990	M60	A	Y		09/81 ▸ 10/82	11511706588	**506141**	N
320/4,320i	*29/11/12/31/32, 31/51/71 79*	E		1990	2000E, E21		Y		06/75 ▸ 07/79	11511258933	**506069**	N
320/6	*18/11/12*	E		1990	M60		Y		09/81 ▸ 10/82	11511706588	**506141**	N
323i	*18/31/32*	E		2316	M60.EZ	M	Y		03/81 ▸ 10/82	11511706588	**506141**	N
323i	*18/41/42*	E		2316	M60.EZ	A	Y		03/81 ▸ 10/82	11511706588	**506141**	N
3 series E30												
316i	*AB/11/12, AC/11/12, AJ/11/12*	E		1596	M40B16ME.8	M	Y		09/88 ▸ 09/93	11519070763	**506046**	N
316i,316i Touring	*AB/21/22, AC/21/22, AJ/21 22*	E		1596	M40B16ME.8	A	Y		09/88 ▸ 09/93	11519070763	**506046**	N
316,318i	*10/11/12/52/72, 13/15/31 32/52/72, AC/51/71, AK/31 51/71*	E		1766	M10B//18LE/18L/18K/18V//18L/ 18V/18LE/18K	M	Y		09/82 ▸ 09/88	11519070755	**506052**	N
316,318i	*10/11/21/22/32/42/62/81 82, 13/25/41/42/62/82, AC 61/81, AK/41/61*	E		1766	M10B/18V/18L/18LE/18K	A	Y		09/82 ▸ 08/88	11519070755	**506052**	N
318i,318i Touring	*AG71, AF/51/52, AJ/51/52 72, BA/51/52*	E		1796	M40B/18ME/18	M	Y		09/87 ▸ 09/93	11519070763	**506046**	N
318iS	*AF91*	E		1796	M42B18	M	Y		11/89 ▸ 12/91	11511734595	**506109**	N

• **New** Nouveau **Nuevo** Novo **Nuovo** Nieuw **Neu** Yeni Новый Nou

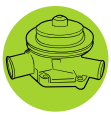

BMW (.../...)

3 series E30 (.../...)

318i,318i Touring	AG81, AF/61/62, AJ/61/62 82, BA/61/62	E	1796	M40B//18/18ME//18ME/18	A	Y		09/87 ▸ 09/93	11519070763	**506046**	N	
320i	11/32/51, AA31, AD31, BA31, 14/32 51	E	1990	M20B/20/20M1.Z7	M	Y		09/82 ▸ 09/87	11511706588	**506141**	N	
320i,320i Touring	11/32/51/52, AA31, AD31 14/32/51/52, AH/51/52/71 BA/11/12/21/22/31/32	E	1990	M20B//20/20M1.Z7//20M1.Z7/20	M	Y		09/87 ▸ 09/93	11519070759	**506169**	N	
320i	1442, AA41, AD41, BA41, 11/42	E	1990	M20B/20/20K	A	Y		09/82 ▸ 09/87	11511706588	**506141**	N	
320i	BA41	E	1990	M20B20K	A	Y		09/86 ▸ 05/91	11519070752	**506069**	N	
320i,320i Touring	11/42/61/62, AA41, AD41 14/42/62, AH/61/62/81 BA/41/42	E	1990	M20B//20/20M1.Z7//20/20M1.Z7/20K	A	Y		09/87 ▸ 09/93	11519070759	**506169**	N	
323i	11/71, 14/71/72	E	2316	M20B23L	M	Y		09/82 ▸ 09/86	11511706588	**506141**	N	
323i	11/81/82, 14/81/82	E	2316	M20B23L	A	Y		09/82 ▸ 09/86	11511706588	**506141**	N	
325i,325iX	11/11/12, 1411, 12/31/32 71/91, 15/31/32/71/91, BB 11/31/32	E	2494	M20B/25M1.Z7/25ME/25M/G	M	Y		09/85 ▸ 09/87	11511706588	**506141**	N	
325i,325i Touring,325iX 325iX Touring	11/11/12, 12/31/32/71/91 14/11/12, 15/31/32/71/91 AG/51/52/95, BB/11/12/31 32	E	2494	M20B/25M1.Z7/25M/G/25ME	M	Y		09/87 ▸ 09/93	11519070759	**506169**	N	
325i,325iX	11/21, 12/01/41/42/81, 14 21/22, 15/01/41/42/81, BB 21/41/42	E	2494	M20B/25M1.Z7/25M/G/25ME	A	Y		09/85 ▸ 09/87	11511706588	**506141**	N	
325i,325i Touring,325iX 325iX Touring	11/21/22, 12/01/41/42/81 14/21/22, 15/01/41/42/81 AG/05/61/62, BB/21/22/41 42	E	2494	M20B/25M/G/25M1.Z7/25ME	A	Y		09/87 ▸ 09/93	11519070759	**506169**	N	
325e	12/51/52, 15/51/52	E	2692	M20B27M1.Z7	M	Y		02/85 ▸ 08/87	11511706588	**506141**	N	
325e	15/61/62	E	2692	M20B27M1.Z7	A	Y		02/85 ▸ 08/87	11511706588	**506141**	N	
325e	12/61/62	E	2693	M20B27ME	A	Y		02/85 ▸ 08/87	11511706588	**506141**	N	
324d,324td,324td Touring	AE11, AH91, AD/91	D	2443	M21D/24WA//24WA/24W	M	Y		09/85 ▸ 09/93	11519070765	**506278**	N	
324d,324td,324td Touring	AE21, AH01, AD/01	D	2443	M21D//24WA/24W/24WA	A	Y		09/85 ▸ 09/93	11519070765	**506278**	N	

3 series E36

316i	CA/11/12	E	1596	M40B16ME.8	M	Y		12/90 ▸ 09/93	11510007039	**506110**	N	
316i	BE/11/12, CA/71/72, CE/11/12, CG/10 11/12/16/18	E	1596	M43B16	M	Y		09/93 ▸	11511734602	**506109**	N	
316i	CA/21/22	E	1596	M40B16ME.8	A	Y		04/91 ▸ 09/93	11510007039	**506110**	N	
316i	BE/21/22, CA/81/82, CE/21/22, CG/20 21/22/26/28	E	1596	M43B16	A	Y		09/93 ▸	11511734602	**506109**	N	
318i	CA/31/32	E	1796	M40B18	M	Y		12/90 ▸ 09/93	11510007039	**506110**	N	
318i,318iS,318ti	BE/51/52, BH/31/32, CA/51 52/91/92, CE/31/32, CG/51 52	E	1796	M42B18, M43B18	M	Y		01/92 ▸	11511734602	**506109**	N	
318i	CA/41/42	E	1796	M40B18	A	Y		01/91 ▸ 09/93	11510007039	**506110**	N	
318i,318iS,318ti	BE/61/62, BH/41/42, CA/01 02/61/62, CE/41/42, CG/61 62	E	1796	M42B18, M43B18	A	Y		01/92 ▸	11511734602	**506109**	N	
316i,318iS,318ti	BE/71, CG/71/72, CS//10 11/12/15/16/17/18	E	1895	M44B/19, M43B/19-E46/19-E46G	M	Y		12/95 ▸	11511734602	**506109**	N	
316i,318iS,318ti	BE/81, CG/81/82, CS/20/21 22/28	E	1895	M43B19-E46, M44B19	A	Y		12/95 ▸	11511734602	**506109**	N	
320i	BF/11/12/51, BJ/11/12/31/32, CB/11 12/51/52, CE/51/52	E	1991	M52B20, M50B20	M	Y		12/90 ▸	11517527910	**506107**	N	
320i	BF/21/22/61, BJ/21/22/41/42, CB/21 22/61/62, CE/61/62	E	1991	M50B20, M52B20	A	Y		12/90 ▸	11517527910	**506107**	N	
323i,323ti,325i	BF/31/32/71/72, BJ/51/52 71, CB/31/32/71/72, CG31 CT31, CE/71/72	E	2494	M52B///25, M50B///25, M52B/25-EU3, M50B//25, M52B/25/25-EU3	M	Y		12/90 ▸	11517527910	**506107**	N	
323i,323ti,325i	BF/41/42/81/82, BJ/61/62 81/82, CB/41/42/81/82 CG41, CT41, CE/81/82	E	2494	M50B/25, M52B/25/25-EU3	A	Y		12/90 ▸	11517527910	**506107**	N	

• **New** Nouveau **Nuevo** Novo **Nuovo** Nieuw **Neu** Yeni Новый Nou

		Type Ctr.		cc						OE	Valeo	
BMW (.../...)												
3 series E36 (.../...)												
328i	*BG/10/11/12, BK/71/72, CD/11/12, CF 11/12*	E		2793	M52B28	M	Y		01/95 ▸	11517527910	**506107**	N
328i	*BG/21/22, BK/81/82, CD/21/22, CF/21 22*	E		2793	M52B28	A	Y		01/95 ▸	11517527910	**506107**	N
318tds	*CC/51/52, CF/51/52, CJ/50 51/52*	D		1665	M41D	M	Y		09/94 ▸ 04/01	11519069529	**506289**	N
325td,325tds	*CC/11/12/31/32, CF/91/92*	D		2497	M51A, M51D25	M	Y		08/91 ▸ 09/99	11519069529	**506289**	N
325td,325tds	*CC/21/22/41/42, CF/01/02*	D		2497	M51D25, M51A	A	Y		08/91 ▸ 09/99	11519069529	**506289**	N
3 series E46												
316Ci,316i,316ti	*AT/11/12*	E		1596	N40B16A,N45B16	M	N		05/01 ▸ 02/05	11517511221	**506919**	N
316i,316ti	*AT/50/51/52, AX/30/31/32 EX31, AY/30/31/32*	E		1796	N42B/18WT,N42B18,N46B/18A	M	N		05/01 ▸ 08/05	11517511221	**506919**	N
316i,316ti	*AT/60/61/62, AX/40/41/42 EX41, AY/40/41/42*	E		1796	N42B/18WT/18,N46B18A	A	N		05/01 ▸ 08/05	11517511221	**506919**	N
316i,318Ci,318i	*AL/10/11/12/30/31/32, AP 30/31/32, BL/30/31/32, ER 10/11/12*	E		1895	M43B19-E46	M	Y		03/98 ▸	11511734602	**506109**	N
316i,318Ci,318i	*AL/20/21/22/40/41/42, AP 40/41/42, BL/40/41/42, ER 20/21/22*	E		1895	M43B19-E46	A	Y		03/98 ▸	11511734602	**506109**	N
320Ci,320i	*AM/10/18, BM11, AR/10/11 18*	E		1991	M52B20-EU3	M	Y		03/98 ▸	11517527910	**506107**	N
320Ci,320i	*AM/20/28, BM21, AR/20/21 28*	E		1991	M52B20-EU3	A	Y		03/98 ▸	11517527910	**506107**	N
318Ci	*BP/71, BV/70/71/72*	E		1995	M43B20, N42B20VVT	M	Y		09/01 ▸	11511734602	**506109**	N
318Ci,318i,318ti	*AU/50/51/52, AX/50/51/52 AY/70/71/72, BP71, BD/91 92, BV/70/71/72, BY71, BW 71/72*	E		1995	N42B/20/20VVT,N46B20A	M	N		01/01 ▸ 07/06	11517511221	**506919**	N
318Ci,318i,318ti	*AU/60/61/62, AX/60/61/62 BD10, BP81, AY/80/81/82 BV/80/81/82, BY81, BW/81 82*	E		1995	N42B/20/20VVT,N46B20A	A	N		01/01 ▸ 07/06	11517511221	**506919**	N
318Ci	*BV/80/81/82*	E		1995	M43B20	A	Y		09/01 ▸	11511734602	**506109**	N
320CI,320i	*BD/21/22, BS21, BN/21/22 BW/21/22, EN/20/21/22/28 ZV28, EV/20/21/22*	E		2171	M54B22	A	Y		07/00 ▸	11517527910	**506107**	N
323CI,323i,325Ci,325i	*AM/30/32/38, AT/31/32, BD BS31, BN/31/32, BW/31/32 EN/30/31/32/38, EP/30/31 38, EU/30/31/38, ZV30, EV 30/31/32*	E		2494	M54B///25, M52B///25-EU3, M54B/ 25-6S5/25, M52B25-EU3	M	Y		03/98 ▸	11517527910	**506107**	N
323Ci,323i,325Ci,325i 325ti,325xi	*AM/40/42/48, AT/41/42, BD 41/42, BM/41/42, BR41 BS41, BN/41/42, BW/41/42 EN/40/41/42/48, EP/40/41 48, EU/40/41/48, ZV40, EV 40/41/42*	E		2494	M54B/25, M52B/25-EU3, M54B///25, M52B///25-EU3, M54B25-6S5	A	Y		03/98 ▸	11517527910	**506107**	N
328Ci,328i	*AM/50/52/58, AR/50/52/58 BM/51/52*	E		2793	M52B28-EU3	M	Y		03/98 ▸	11517527910	**506107**	N
328Ci,328i	*AM/60/62/68, AR/60/62/68 BM/61/62*	E		2793	M52B28-EU3	A	Y		03/98 ▸	11517527910	**506107**	N
330Ci,330i,330xi	*AV/50/58, AW/50/58, BD/51 52, BS51, BN/51/52, BW/51 52, EN/50/51/52/58, EP/50 51/58, EV/50/51/52/58, EW 50/51/58*	E		2979	M54B//30/30-231//30-231/30	M	Y		04/00 ▸	11517527910	**506107**	N

• **New** Nouveau **Nuevo** Novo **Nuovo** Nieuw **Neu** Yeni Новый Nou

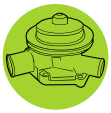

		E	2979	M54B/30-231/30	A	Y		04/00 ▸	11517527910	**506107**	N	
330Ci,330i,330xi	*AW60, AV/60/68, BD/61/62 BS61, BN/61/62, BW/61/62 EN/60/61/62/68, EP/60/61 68, EV/60/61/62/68, EW/60 61/68*											
318d,320d	*AL/70/71/72/78, AX/70/71 72/78, EL/50/51, EU/50/51 71/72*	D	1951	M47D/20/20UL	M	Y		03/98 ▸	11512247552	**506646**	vvv	
318d	*EU/81/82*	D	1951	M47D20UL	A	Y		09/01 ▸	11517788306	**506711**	V	
320d	*AX/80/81/82/88*	D	1951	M47D20	A	Y		07/99 ▸ 09/01	11512247552	**506646**	vvv	
320d	*AX/80/81/82/88*	D	1951	M47D20	A	Y		07/99 ▸	11517786736	**506662**	vvv	
318d,320Cd,320d	*AP/70/71/72/78, AS/70/71 72/78, AT/71/72/91/92, EL 71/72*	D	1995	M47D/20TU/20TUUL	M	Y		09/01 ▸	11512247552	**506646**	vvv	
318d,320Cd,320d	*AP/80/81/82/88, AS/80/81 82/88, AT/80/81/82, EL/81 82*	D	1995	M47D/20TUUL/20TU	A	Y		09/01 ▸	11517788306	**506711**	V	
330d,330xd	*AL/90/91/98, AP/90/91/98 EL/90/98, EP/70/78, EV 90/91/98*	D	2926	M57D30-184	M	Y		09/99 ▸	11517786192	**506663**	vvv	
330d,330xd	*EL00, EP80, AL/01/08, EV 00/08*	D	2926	M57D30-184	A	Y		09/99 ▸	11517786192	**506663**	vvv	
330Cd,330d,330xd	*BV/91/92, EX/71/91/92*	D	2993	M57D30TU	M	Y		03/03 ▸	11517786192	**506663**	vvv	
330Cd,330d,330xd	*BV/10, EX/10/81*	D	2993	M57D30TU	A	Y		03/03 ▸	11517786192	**506663**	vvv	
3 series E90												
316i		E	1596	N45B16	M	N		03/05 ▸ 01/07	11517511221	**506919**	N	
316i		E	1796	N42B18VVT	M	N		02/06 ▸	11517511221	**506919**	N	
318i,320i	*VA/51/52/71/72, VR/51/52 71/72, WA/51/52*	E	1995	N46B/20B/20U1/20O1	M	N		03/05 ▸ 08/07	11517511221	**506919**	N	
318i,320i	*VA/61/62/81/82, VR/61/62 81/82*	E	1995	N46B/20U1/20O1	A	N		03/05 ▸ 08/07	11517511221	**506919**	N	
320si	*VF/71/72*	E	1997	N45B20A	M	N		02/06 ▸ 09/08	11517511221	**506919**	N	
3 series LCI E90/E91												
1.6 i 16V		E	1596	N45B16A	M	N		05/08 ▸	11517511221	**506919**	N	
1.6 i 16V		E	1596	N45B16A	A	N		05/08 ▸	11517511221	**506919**	N	
2.0 i 16V	*DV71*	E	1995	N43B20U0,N46B/20B/20N	M	N		07/07 ▸	11517511221	**506919**	N	
2.0 i 16V		E	1995	N46B/20B/20N	A	N		07/07 ▸	11517511221	**506919**	N	
5 series E12												
518,518i	*36/11/12/51/52, 46/11/12 31*	E	1766	M10B///18V, 118////4, M10B18K	M	Y		06/74 ▸ 06/81	11511258933	**506069**	N	
518	*36/21/61/62*	E	1766	118/4	A	Y		09/74 ▸ 07/79	11511258933	**506069**	N	
520/4,520i	*37/11/12/31/32/51/52/71 72*	E	1990	M15E12, M17	M	Y		06/72 ▸ 01/79	11511258933	**506069**	N	
520/4	*37/21/22/61/62*	E	1990	M17	A	Y		06/72 ▸ 01/79	11511258933	**506069**	N	
525	*38/21/22/61/62*	E	2494	M125	A	Y		10/73 ▸ 06/81	11519070761	**506249**	N	
525	*38/11/12/51/52*	E	2494	M125		Y		10/73 ▸ 06/81	11519070757	**506070**	N	
528,528i	*39/11/12/51/52/71/72*	E	2788	E3, M30B28L	M	Y		01/75 ▸ 02/78	11519070757	**506070**	N	
528i	*39/71/72*	E	2788	M30B28L	M	Y		03/78 ▸ 05/81	11519070761	**506249**	N	
528,528i	*39/21/22/61/62/81/82*	E	2788	E3, M30B28L	A	Y		01/75 ▸ 02/78	11519070757	**506070**	N	
528i	*39/81/82*	E	2788	M30B28L	A	Y		03/78 ▸ 05/81	11519070761	**506249**	N	
5 series E28												
518,518i	*40/11/12/35*	E	1766	M10B/18LE/18V	M	Y		04/81 ▸ 03/82	11511258933	**506069**	N	
518,518i	*40/11/12/35/91/92*	E	1766	M10B/18V/18LE	M	Y		04/82 ▸ 08/88	11519070755	**506052**	N	
518i	*4093*	E	1766	M10B18LE	A	Y		09/84 ▸ 08/88	11519070755	**506052**	N	
520i	*4872, 40/31/51/52/71*	E	1990	M20B/20K/20M1.Z7	M	Y		04/81 ▸ 08/87	11511706588	**506141**	N	
520i	*4872, 40/51/52*	E	1990	M20B20K	M	Y		09/87 ▸ 08/88	11519070759	**506169**	N	
520i	*40/61/62/81/82*	E	1990	M20B20K	A	Y		09/81 ▸ 08/87	11511706588	**506141**	N	
520i	*40/61/62/82*	E	1990	M20B20K	A	Y		09/87 ▸ 08/88	11519070759	**506169**	N	
525i	*DA31, 41/31/32*	E	2494	M30B/25L/25	M	Y		05/81 ▸ 08/88	11519070761	**506249**	N	

• **New** Nouveau **Nuevo** Novo **Nuovo** Nieuw **Neu** Yeni Новый Nou

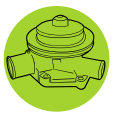

Valeo

Water pump
Pompe à eau
Bomba de água
Bomba de água
Pompa acqua
Waterpomp
Wasserpumpen
Pompa wodna
Vízpumpa
Su pompasi
ВОДЯНОЙ НАСОС
Vodní pumpa
Pompa de apă

		Type Ctr.		cc						OE	Valeo		
BMW (.../...)													
5 series E28 (.../...)													
525i	*4142, DA41*	E	2494	M30B25L	A	Y		05/81 ▸ 08/88	11519070761	**506249**	N	
525e	*DB51, 42/31/32/52*	E	2693	M20B27ME	M	Y		03/83 ▸ 08/87	11511706588	**506141**	N	
525e	*DB51, 42/31/32/52*	E	2693	M20B27ME	M	Y		09/87 ▸ 08/88	11511719836	**506169**	N	
525e	*DB61, 42/26/41/42*	E	2693	M20B27ME	A	Y		03/83 ▸ 08/87	11511706588	**506141**	N	
525e	*4226, DB61*	E	2693	M20B27ME	A	Y		09/87 ▸ 08/88	11511719836	**506169**	N	
528i	*41/71/72*	E	2788	M30B28LE	M	Y		05/81 ▸ 08/88	11519070761	**506249**	N	
528i	*41/81/82*	E	2788	M30B28LE	A	Y		06/81 ▸ 08/88	11519070761	**506249**	N	
535i	*DC/11/12/31/32*	E	3430	M30B/34ME/34M	M	Y		01/85 ▸ 08/88	11519070761	**506249**	N	
M535i	*DC/51/52/71/72*	E	3430	M30B/35M.E7/34M	M	Y		02/85 ▸ 08/88	11519070761	**506249**	N	
M535i	*DC/61/81/82*	E	3430	M30B/34M/35M.E7	A	Y		12/84 ▸ 08/88	11519070761	**506249**	N	
535i	*DC/21/22/41/42*	E	3430	M30B/34M/34ME	A	Y		01/85 ▸ 08/88	11519070761	**506249**	N	
M5	*DC/91/92*	E	3453	M88/3	M	Y		10/84 ▸ 08/88	11511312539	**506249**	N	
524d,524td	*42/11/91*	D	2443	M21D//24WA/24W/24W/24WA	M	Y		11/82 ▸ 08/88	11519070765	**506278**	N	
524td	*4221*	D	2443	M21D24WA	A	Y		05/83 ▸ 08/87	11519070765	**506278**	N	
5 series E34													
518i	*HA/11/12*	E	1796	M40B18	M	Y		09/89 ▸ 08/91	11511715292	**506046**	N	
518i	*HA/11/12, HG/11/12/31*	E	1796	M43B18, M40B18	M	Y		09/89 ▸ 09/96	11510007039	**506110**	N	
518i	*HA/31/32, HG/11/12*	E	1796	M43B18	M	Y		05/94 ▸ 09/96	11511734602	**506109**	N	
518i	*HA/21/22*	E	1796	M40B18	A	Y		10/93 ▸ 04/94	11510007039	**506110**	N	
518i	*HA/41/42*	E	1796	M43B18	A	Y		08/94 ▸ 09/95	11511734602	**506109**	N	
520i	*HB/11/12/31/32*	E	1990	M20B//20M1.Z7/20M0.E8/20M0.E8	M	Y		01/88 ▸ 07/90	11519070759	**506169**	N	
520i	*HB/21/22/41/42*	E	1990	M20B/20M0.E8/20M1.Z7	A	Y		01/88 ▸ 07/90	11519070759	**506169**	N	
520i	*HB/51/52, HG/51/52*	E	1991	M50B20	M	Y		03/90 ▸ 09/96	11517527910	**506107**	N	
520i	*HB/61/62, HG/61/62*	E	1991	M50B20	A	Y		03/90 ▸ 09/96	11517527910	**506107**	N	
525i	*HC/11/12/13*	E	2494	M20B25	M	Y		02/88 ▸ 08/90	11519070759	**506169**	N	
525i,525iX	*HD/51/52/71/72, HJ/51/52 71/72*	E	2494	M50B25	M	Y		03/90 ▸ 09/96	11517527910	**506107**	N	
525i	*HC/21/22/23*	E	2494	M20B25	A	Y		02/88 ▸ 07/90	11519070759	**506169**	N	
525i,525iX	*HD/61/62/81/82, HJ/61/62 81/82*	E	2494	M50B25	A	Y		03/90 ▸ 09/96	11517527910	**506107**	N	
530i	*HC/51/52*	E	2986	M30B30M.E7	M	Y		01/88 ▸ 04/90	11519070761	**506249**	N	
530i	*HC/61/62*	E	2986	M30B30M.E7	A	Y		01/88 ▸ 06/90	11519070761	**506249**	N	
530i	*HE/11/12, HK/11/12*	E	2997	M60B30	M	Y		09/92 ▸ 09/96	11510007042	**506445**	N	
530i	*HE/21/22, HK/21/22*	E	2997	M60B30	A	Y		09/92 ▸ 09/96	11510007042	**506445**	N	
535i	*HD/11/12/13*	E	3430	M30B/34M/35M7	M	Y		11/87 ▸ 04/93	11519070761	**506249**	N	
535i	*HD/21/22/23*	E	3430	M30B/34M/35M7	A	Y		11/87 ▸ 04/93	11519070761	**506249**	N	
540i	*HE/51/52, HK/31/32*	E	3982	M60B40	M	Y		07/93 ▸ 09/96	11510007042	**506445**	N	
540i	*HE/61/62, HK/41/42*	E	3982	M60B40	A	Y		09/92 ▸ 09/96	11510007042	**506445**	N	
524td	*HA51*	D	2443	M21D24WA	M	Y		03/88 ▸ 08/91	11512242176	**506266**	N	
524td	*HA61*	D	2443	M21D24WA	A	Y		03/88 ▸ 08/91	11512242176	**506266**	N	
525td,525tds	*HA/71/72/91/92, HG/71/72 91*	D	2497	M51A, M51D25	M	Y		08/91 ▸ 09/96	11519069529	**506289**	N	
525td,525tds	*HA/01/02/81/82, HG/01/81 82*	D	2497	M51D25, M51A	A	Y		08/91 ▸ 09/96	11519069529	**506289**	N	
5 series E39													
520i	*DD/11/12, DH/11/12, DM/10/11, DR/10 11*	E	1991	M52B/20-EU3/20	M	Y		07/96 ▸	11517527910	**506107**	N	
520i	*DD/21/22, DH/21/22, DM/20/21, DR/20 21*	E	1991	M52B/20-EU3/20	A	Y		07/96 ▸	11517527910	**506107**	N	
520i	*DS/10/11, DT/11/21*	E	2171	M54B22	M	Y		07/00 ▸ 04/04	11517527910	**506107**	N	
520i	*DS/20/21, DT/10/20*	E	2171	M54B22	A	Y		07/00 ▸ 04/04	11517527910	**506107**	N	
523i,525i	*DD/31/32, DH/31/32, DM/30 31, DR/30/31, DT30, ZT38 DS/30/38*	E	2494	M54B/25, M52B/25-EU3/25	M	Y		09/95 ▸	11517527910	**506107**	N	
523i,525i	*DD/41/42, DH/41/42, DM/40 41, DR/40/41, DT40, ZT48 DS/40/48*	E	2494	M52B///25, M54B///25, M52B/25-EU3//25-EU3/25	A	Y		10/95 ▸	11517527910	**506107**	N	
528i	*DD/51/52, DH/51/52, DM/50/58, DP/50 58*	E	2793	M52B//28-EU3/28//28/28-EU3	M	Y		09/95 ▸	11517527910	**506107**	N	
528i	*DD/60/61/62, DH/61/62, DM/60/68, DP 60/68*	E	2793	M52B/28-EU3/28	A	Y		09/95 ▸	11517527910	**506107**	N	

• **New** Nouveau **Nuevo** Novo **Nuovo** Nieuw **Neu** Yeni Новый Nou

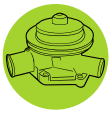

BMW (.../...)

5 series E39 (.../...)

530i	DT50, ZT58, DS/50/58	E	2979	M54B30-231	M	Y		07/00 ▸ 04/04	11517527910	**506107**	N	
530i	DT60, ZT68, DS/60/68	E	2979	M54B30-231	A	Y		07/00 ▸ 04/04	11517527910	**506107**	N	
535i	DE/11/12	E	3498	M62B35	M	Y		07/96 ▸	11511742647	**506521**	N	
535i	DN11, DE/11/12	E	3498	M62B/35-245/35	M	Y		09/98 ▸	11511713266	**506800**	N	
535i	DE/21/22	E	3498	M62B35	A	Y		07/96 ▸	11511742647	**506521**	N	
535i	DN21, DE/21/22	E	3498	M62B/35/35-245	A	Y		09/98 ▸	11511713266	**506800**	N	
540i	DE/51/52, DJ/51/52	E	4398	M62B44	M	Y		07/96 ▸	11511742647	**506521**	N	
540i	DE/51/52, DN51, DR51, DJ/51/52	E	4398	M62B/44-285/44	M	Y		09/98 ▸	11511713266	**506800**	N	
540i	DE/61/62, DJ/61/62	E	4398	M62B44	A	Y		07/96 ▸	11511742647	**506521**	N	
540i	DE/61/62, DJ/61/62, DR61, DN/61/81	E	4398	M62B/44-285/44	A	Y		09/98 ▸	11511713266	**506800**	N	
520d	DM/70/71, DR/70/71	D	1951	M47D20	M	Y		01/00 ▸	11517786736	**506662**	vvv	
525d	DL/90/91/98, DP/90/91/98	D	2497	M57D25	M	Y		01/00 ▸	11517786192	**506663**	vvv	
525Td,525tds	DF/50/51/70/71/72/78, DG 70/71/78, DJ/71/72	D	2497	M51D25	M	Y		10/95 ▸ 04/04	11519069529	**506289**	N	
525d	DL/00/01/08, DP/00/01/08	D	2497	M57D25	A	Y		01/00 ▸	11517786192	**506663**	vvv	
525tds	DF/80/81/82/88, DG/80/81 88, DJ/81/82	D	2497	M51D25	A	Y		10/95 ▸ 04/04	11519069529	**506289**	N	
530d	DL/70/71/72/78, DP/70/71/72/78	D	2926	M57D30-184	M	Y		09/98 ▸ 09/99	11512354055	**506664**	vvv	
530d	DL//70/71/72/78, DP//70/71/72/78	D	2926	M57D/30-193/30-184	M	Y		09/99 ▸	11517786192	**506663**	vvv	
530d	DL/80/81/82/88, DP/80/81/82/88	D	2926	M57D30-184	A	Y		09/98 ▸ 09/99	11512354055	**506664**	vvv	
530d	DL//80/81/82/88, DP//80/81/82/88	D	2926	M57D/30-193/30-184	A	Y		09/99 ▸	11517786192	**506663**	vvv	

5 series E60

520i	NA/31/32	E	2171	M54B22	M	Y		05/03 ▸	11517527910	**506107**	N	
520i	NA/41/42	E	2171	M54B22	A	Y		05/03 ▸	11517527910	**506107**	N	
525i	NA/51/52, NG/51/52	E	2494	M54B25-6S5	M	Y		09/03 ▸	11517527910	**506107**	N	
525i	NA/61/62, NG/61/62	E	2494	M54B25-6S5	A	Y		09/03 ▸	11517527910	**506107**	N	
530i	NA/71/72	E	2979	M54B30-231	M	Y		05/03 ▸	11517527910	**506107**	N	
530i	NA/81/82	E	2979	M54B30-231	A	Y		05/03 ▸	11517527910	**506107**	N	

6 series E24

628	EA71, 51/31/32/72	E	2788	M30B28LE	M	Y		09/79 ▸ 08/88	11519070761	**506249**	N	
628	EA81, 51/41/42/82	E	2788	M30B28LE	A	Y		09/79 ▸ 08/88	11519070761	**506249**	N	
630	5111, 5221	E	2986	M30B30M	M	Y		02/76 ▸ 08/79	11519070757	**506070**	N	
630	51/21/22	E	2986	M30B30M	A	Y		02/76 ▸ 08/79	11519070757	**506070**	N	
633	52/31/32	E	3210	M30B32L	M	Y		01/76 ▸ 08/79	11519070757	**506070**	N	
633	5231	E	3210	M30B32L	M	Y		09/79 ▸ 12/81	11519070761	**506249**	N	
633	52/41/42	E	3210	M30B32L	A	Y		07/76 ▸ 08/79	11519070757	**506070**	N	
633	52/41/42	E	3210	M30B32L	A	Y		09/79 ▸ 12/81	11519070761	**506249**	N	
635,M635	EC71, 53/51/52/72	E	3430	M30B/35M.E7//34M/35M.E7	M	Y		05/82 ▸ 04/89	11519070761	**506249**	N	
635,M635	EC81, 53/61/62/82	E	3430	M30B/35M.E7//34M/35M.E7	A	Y		05/82 ▸ 04/89	11519070761	**506249**	N	
635	5332, EE31	E	3453	M30B35L	M	Y		06/78 ▸ 08/79	11519070757	**506070**	N	
635,M635	53/32, EE31, 55/31/32	E	3453	M88/3, M30B35L	M	Y		09/79 ▸ 04/89	11519070761	**506249**	N	
635	53/41/42	E	3453	M30B35L	A	Y		09/79 ▸ 08/82	11519070761	**506249**	N	

7 series E23

728iS	64/31/71	E	2494	M30B25L	M	Y		09/81 ▸ 04/86	11519070761	**506249**	N	
728iS	64/41/81	E	2494	M30B25L	A	Y		11/81 ▸ 04/86	11519070761	**506249**	N	
728,728i	65/11/12/31	E	2788	M128, M30B28LE	M	Y		05/77 ▸ 08/79	11519070757	**506070**	N	
728i	65/31/32/71/72	E	2788	M30B28LE	M	Y		09/79 ▸ 04/86	11519070761	**506249**	N	
728,728i	65/21/22/41	E	2788	M128, M30B28LE	A	Y		04/77 ▸ 08/79	11519070757	**506070**	N	
728i	65/41/42/81/82	E	2788	M30B28LE	A	Y		09/79 ▸ 05/86	11519070761	**506249**	N	
730	66/11/12	E	2986	M30B30	M	Y		07/77 ▸ 08/79	11519070757	**506070**	N	
730	66/21/22	E	2986	M30B30	A	Y		07/77 ▸ 08/79	11519070757	**506070**	N	
732i,733i	66/31, 67/31/32	E	3210	M30B/32L/32M	M	Y		03/77 ▸ 08/79	11519070757	**506070**	N	
732i	66/31/32/34/71/72/74	E	3210	M30B/32M/32L	M	Y		09/79 ▸ 04/86	11519070761	**506249**	N	
732i,733i	66/41, 67/41/42	E	3210	M30B32L	A	Y		03/77 ▸ 09/79	11519070757	**506070**	N	
732i,733i,745i	66/41/42/44/47/49/81/82 84/89, 67/45/46, 69/41/81	E	3210	M30B/32L/32M/32LA	A	Y		09/79 ▸ 05/86	11519070761	**506249**	N	
735i	FH71, 68/51/72	E	3430	M30B/34M/35M.E7	M	Y		09/82 ▸ 05/86	11519070761	**506249**	N	
735i,745i	67/21, 68/61/82, FG81 FH81, 69/61/91	E	3430	M30B/35M.E7/34M/34MA	A	Y		09/82 ▸ 05/86	11519070761	**506249**	N	
735i	68/31/32	E	3453	M30B35L	M	Y		09/79 ▸ 09/82	11519070761	**506249**	N	

• **New** Nouveau **Nuevo** Novo **Nuovo** Nieuw **Neu** Yeni Новый Nou

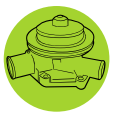

		Type Ctr.		cc						OE	Valeo	
BMW (.../...)												
7 series E23 (.../...)												
735i	*68/41/42*	E		3453	M30B35L	A	Y		09/79 ▸ 09/82	11519070761	**506249**	N
7 series E32												
730i	*GA/31/32/71/72, GC/21/22*	E		2986	M30B/30M.E7/30M	M	Y		09/86 ▸ 03/94	11519070761	**506249**	N
730i	*GA/41/42/81/82*	E		2986	M30B/30M/30M.E7	A	Y		09/86 ▸ 03/94	11519070761	**506249**	N
730i	*GD/11/51*	E		2997	M60B30	M	Y		04/92 ▸ 05/94	11519070761	**506249**	N
730i	*GD/11/51*	E		2997	M60B30	M	Y		04/92 ▸ 05/94	11510007042	**506445**	N
730i	*GD/21/22/61/62*	E		2997	M60B30	A	Y		04/92 ▸ 05/94	11519070761	**506249**	N
730i	*GD/21/22/61/62*	E		2997	M60B30	A	Y		04/92 ▸ 05/94	11510007042	**506445**	N
735i	*GB/31/32/33/51/52, GC/31/51/52*	E		3430	M30B/35/34M/35M.E7	M	Y		09/86 ▸ 06/92	11519070761	**506249**	N
735i	*GB/41/42/43/61/62, GC/41/42/43/61 62*	E		3430	M30B/35M.E7/34M/35	A	Y		09/86 ▸ 07/92	11519070761	**506249**	N
740i	*GD/41/42/81/82*	E		3982	M60B40	A	Y		09/92 ▸ 05/94	11519070761	**506249**	N
740i	*GD/41/42/81/82*	E		3982	M60B40	A	Y		09/92 ▸ 05/94	11510007042	**506445**	N
7 series E38												
728i	*GE/11/30/31*	E		2793	M52B//28-EU3/28/28-EU3	M	Y		07/95 ▸ 09/98	11517527910	**506107**	N
728i	*GH41, GE/21/22/40/41/42*	E		2793	M52B//28-EU3/28/28-EU3	A	Y		07/95 ▸ 09/98	11517527910	**506107**	N
730i	*GF11*	E		2997	M60B30	M	Y		06/94 ▸ 08/01	11510007043	**506631**	N
730i	*GF21, GJ21*	E		2997	M60B30	A	Y		06/94 ▸ 08/01	11510007043	**506631**	N
735i	*GF31, GJ31*	E		3498	M62B35	M	Y		04/96 ▸ 08/01	11511742647	**506521**	N
735i	*GF41, GJ41*	E		3498	M62B35	A	Y		04/96 ▸ 08/01	11511742647	**506521**	N
740i	*GJ61*	E		3982	M60B40	A	Y		06/94 ▸ 03/96	11510007043	**506631**	N
740i	*GF71, GJ71*	E		4398	M62B44	M	Y		04/96 ▸ 08/01	11511742647	**506521**	N
740i	*GF81, GJ81*	E		4398	M62B44	A	Y		04/96 ▸ 08/01	11511742647	**506521**	N
750i	*GG21, GK21*	E		5379	M73B54	A	Y		06/94 ▸ 08/01	11511741980	**506799**	N
725Tds	*GE91*	D		2497	M51D25	M	Y		04/96 ▸ 08/01	11519069529	**506289**	N
725Tds	*GE01*	D		2497	M51D25	A	Y		04/96 ▸ 08/01	11519069529	**506289**	N
730d	*GE60*	D		2926	M57D30-184	A	Y		09/98 ▸ 09/99	11512354055	**506664**	vvv
730d	*GE60*	D		2926	M57D30-184	A	Y		09/99 ▸ 03/00	11517786192	**506663**	vvv
7 series E65												
730i	*GL/21/22*	E		2979	M54B30	A	Y		09/03 ▸ 02/05	11517527910	**506107**	N
730i	*HL/21/22*	E		2996	N52B30B	A	Y		03/05 ▸	11517527910	**506107**	N
730d	*GM/21/22, HM/21/22*	D		2993	M57D/30TU/30TU2	A	Y		09/02 ▸	11517794247	**506711**	V
7 series E66												
730Li	*GN/21/22*	E		2979	M54B30	A	Y		09/03 ▸ 02/05	11517527910	**506107**	N
730Ld	*HM/41/42*	D		2993	M57D30TU2	A	Y		09/05 ▸	11517794247	**506711**	V
8 series E31												
840	*EF51*	E		3982	M60B40	M	Y		03/94 ▸ 07/96	11511742647	**506521**	N
840	*EF61*	E		3982	M60B40	A	Y		12/92 ▸ 07/96	11510007043	**506631**	N
840	*EF/71/72*	E		4398	M62B44	M	Y		03/96 ▸	11511742647	**506521**	N
840	*EF/81/82*	E		4398	M62B44	A	Y		03/96 ▸	11511742647	**506521**	N
M5 E12												
3.5 i	*47/01/02*	E		3453	M30B35L	M	Y		04/80 ▸ 05/81	11519070761	**506249**	N
M5 E34												
3.6 i	*HD/91/92*	E		3535	S38B36M	M	Y		07/88 ▸ 12/91	11511315563	**506862**	N
3.8 i	*HJ91, HC/91/92*	E		3795	S38B38	M	Y		12/91 ▸	11511315563	**506862**	N
X1 (2009>)												
2.0 i 16V	*VL/31/32*	E		1995	N46B20B	M	N		03/10 ▸	11517511221	**506919**	N
2.0 i 16V	*VL/41/42*	E		1995	N46B20B	A	N		03/10 ▸	11517511221	**506919**	N
X3 (2003>)												
2.0 i 16V	*PA31*	E		1995	N46B20O1	M	N		09/05 ▸ 07/06	11517511221	**506919**	N
2.5 i 24V	*PA71*	E		2494	M54B25-6S5	M	Y		03/04 ▸	11517527910	**506107**	N
2.5 i 24V	*PA71*	E		2494	M54B25-6S5	A	Y		03/04 ▸	11517527910	**506107**	N
3.0 i 24V	*PA91*	E		2979	M54B30-231	M	Y		10/03 ▸	11517527910	**506107**	N

• **New** Nouveau **Nuevo** Novo **Nuovo** Nieuw **Neu** Yeni Новый Nou

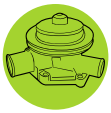

Type Ctr.		cc						OE	Valeo		
BMW (.../...)											
X3 (2003>) (.../...)											
3.0 i 24V *PA91*	E	2979	M54B30-231	A	Y		10/03 ▸	11517527910	**506107**	N	
X3 E83 LCI (2006>)											
2.0 i *PC/31/32*	E	1995	N46B20B	M	N		08/06 ▸	11517511221	**506919**	N	
X5 E53											
3.0 i 24V *FA*	E	2979	M54B30-231	M	Y		01/00 ▸	11517527910	**506107**	N	
3.0 i 24V *FA/11/18*	E	2979	M54B30-231	A	Y		01/00 ▸	11517527910	**506107**	N	
4.4 i *FB/31/38*	E	4398	M62B44	A	Y		01/00 ▸	11511713266	**506800**	N	
4.6 is *F*	E	4619	M62B46	A	Y		09/01 ▸	11511713266	**506800**	N	
3.0 d *FA*	D	2926	M57D30	M	Y		03/01 ▸	11517786192	**506663**	vvv	
3.0 d *FA/70/71/78*	D	2926	M57D30	A	Y		03/01 ▸	11517786192	**506663**	vvv	
3.0 d 24V *FB70*	D	2993	M57D30TU	M	Y		08/03 ▸	11517794247	**506711**	V	
3.0 d 24V *FB70*	D	2993	M57D30TU	A	Y		08/03 ▸	11517794247	**506711**	V	
Z1											
2.5 i *BA91*	E	2494	M20B25M1.Z7	M	Y		03/89 ▸ 1992	11519070759	**506169**	N	
Z3											
1.8 i *CJ11*	E	1796	M43B18	M	Y		01/96 ▸ 08/98	11511734602	**506109**	N	
1.8 i *CJ21*	E	1796	M43B18	A	Y		01/96 ▸ 08/98	11511734602	**506109**	N	
1.9 i,1.9 i 16V *CH/71, CM/11/12*	E	1895	M43B19-EU3, M44B19	M	Y		01/96 ▸	11511734602	**506109**	N	
1.9 i 16V *CH81*	E	1895	M44B19	A	Y		01/96 ▸ 04/99	11511734602	**506109**	N	
2.0 i *CL/31/32*	E	1991	M52B20-EU3	M	Y		04/99 ▸	11517527910	**506107**	N	
2.0 i *CL/41/42*	E	1991	M52B20-EU3	A	Y		04/99 ▸	11517527910	**506107**	N	
2.8 i 24V *CK51, CJ/31/32*	E	2793	M52B28	M	Y		03/96 ▸	11517527910	**506107**	N	
2.8 i 24V *CK61, CJ/41/42*	E	2793	M52B28	A	Y		03/96 ▸	11517527910	**506107**	N	
3.0 i 24V *CK71*	E	2979	M54B30-231	M	Y		06/00 ▸	11517527910	**506107**	N	
3.0 i 24V *CK81*	E	2979	M54B30-231	A	Y		06/00 ▸	11517527910	**506107**	N	
Z4 (2002>2009)											
2.0 i 16V *BZ/11/12*	E	1995	N46B2001	M	N		03/05 ▸ 08/08	11517511221	**506919**	N	
2.2 i 24V *BT/11/12*	E	2171	M54B22	M	Y		03/04 ▸ 01/06	11517527910	**506107**	N	
2.2 i 24V *BT/21/22*	E	2171	M54B22	A	Y		03/04 ▸ 01/06	11517527910	**506107**	N	
2.5 i 24V *BT//31/32*	E	2494	M54B25-6S5	M	Y		09/02 ▸ 01/06	11517527910	**506107**	N	
2.5 i 24V *BT/41/42*	E	2494	M54B25-6S5	A	Y		09/02 ▸ 01/06	11517527910	**506107**	N	
3.0 i 24V *BT//51/52*	E	2979	M54B30	M	Y		09/02 ▸ 01/06	11517527910	**506107**	N	
3.0 i 24V *BT/61/62*	E	2979	M54B30	A	Y		09/02 ▸ 01/06	11517527910	**506107**	N	
3.0 si 24V *BU/51/52, DU/51/52*	E	2996	N52B30A	M	Y		02/06 ▸ 03/09	11517527910	**506107**	N	
3.0 si 24V *BU/61/62, DU/61/62*	E	2996	N52B30A	A	Y		02/06 ▸ 03/09	11517527910	**506107**	N	
CADILLAC											
CTS											
2.8 i V6 24V	E	2792	LP1	M	Y		04/05 ▸ 09/07	12618472	**506866**	N	
2.8 i V6 24V	E	2792	LP1	A	Y		04/05 ▸ 09/07	12618472	**506866**	N	
3.6 i V6 24V	E	3564	LY7, LLT	M	Y		03/05 ▸ 09/10	12618472	**506866**	N	
3.6 i V6 24V	E	3564	LY7,LLT	A	Y		03/05 ▸ 09/10	12618472	**506866**	N	
SRX											
3.6 i V6 24V	E	3564	LY7	A	Y		07/04 ▸ 09/10	12618472	**506866**	N	
STS											
3.6 VVT V6 24V *1G6D*	E	3564	LY7	A	Y		05/05 ▸ 10/07	12618472	**506866**	N	
CHEVROLET											
Captiva											
2.4 i 16V	E	2405	LD9//2.4F	M	Y		09/06 ▸ 02/11	92226211	**506856**	CR	
3.2 V6 24V	E	3195	LU1/3.2G	A	Y		09/06 ▸ 02/11	92149009	**506866**	N	
Cruze											
1.6 i 109 16V	E	1598	A16DMS	M	Y		05/09 ▸ 01/11	96930074	**506649**	CR	

• **New** Nouveau **Nuevo** Novo **Nuovo** Nieuw **Neu** Yeni Новый Nou

			cc						OE	Valeo		
CHEVROLET (.../...)												
Cruze (.../...)												
1.6 i 109 16V	E	1598	A16DMS	A	Y		05/09 ▸ 01/11	96930074	**506649**	CR	
Evanda												
2.0 i GPL 16V	F	1998	C20SED	M	Y		01/05 ▸ 06/07	93284724	**506309**	CR	
2.0 i GPL 16V	F	1998	C20SED	A	Y		01/05 ▸ 06/07	93284724	**506309**	CR	
2.0 i 16V	E	1998	C20SED	M	Y		01/05 ▸ 06/07	93284724	**506309**	CR	
2.0 i 16V	E	1998	C20SED	A	Y		01/05 ▸ 06/07	93284724	**506309**	CR	
Kalos												
1.2	E	1150	B12S1	M	Y		03/05 ▸	1740070D00	**506954**	CR	
1.2 i	E	1150	T4	M	Y		01/05 ▸ 05/08	96518977	**506659**	CR	
1.4 i,1.4 i 16V	E	1399	F14D3,F14S3	M	Y		01/05 ▸ 05/08	96930074	**506649**	CR	
Lacetti												
1.4 i 16V	E	1399	F14D3	A	Y		01/05 ▸ 05/08	96930074	**506649**	CR	
1.6 i 16V	E	1598	A16DMS	M	Y		01/05 ▸	96930074	**506649**	CR	
1.6 i 16V	E	1598	A16DMS	A	Y		01/05 ▸	96930074	**506649**	CR	
Lanos (T100)												
1.6 i 16V	E	1598	A16DMS	M	Y		09/97 ▸ 12/02	96990997	**506648**	CR	
1.6 i 16V	E	1598	A16DMS	A	Y		09/97 ▸ 12/02	96990997	**506648**	CR	
Matiz												
0.8	E	796	B12S1	M	Y		03/05 ▸	1740070D00	**506954**	CR	
1.0	E	995	B10S	M	Y		03/05 ▸	1740070D00	**506954**	CR	
Nubira												
1.6 i GPL 16V	F	1598	A16DMS-G	M	Y		01/05 ▸ 06/08	96930074	**506649**	CR	
1.8 i 16V	E	1796	F18D	M	Y		01/06 ▸ 09/07	92226211	**506856**	CR	
1.8 i 16V	E	1796	F18D	A	Y		01/06 ▸ 09/07	92226211	**506856**	CR	
Rezzo												
2.0 i 16V	E	1998	X20SED	M	Y		01/05 ▸ 06/08	93284724	**506309**	CR	
2.0 i 16V	E	1998	X20SED	A	Y		01/05 ▸ 06/08	93284724	**506309**	CR	
Spark												
0.8 i	E	796	F8CV	M	Y		05/05 ▸ 12/09	96518977	**506659**	CR	
0.8 i	E	796	F8CV	A	Y		05/05 ▸ 12/09	96518977	**506659**	CR	
1.0 i	E	995	B10S	M	Y		05/05 ▸ 12/09	96518977	**506659**	CR	
CHRYSLER												
300M												
2.7 i V6 24V	E	2736	EER,EES	A	N		01/98 ▸ 04/03	4663732	●**506803**	G	
LHS												
3.5 V6 *LHCP*	E	3523	EGE	A	Y		01/93 ▸ 09/94	4556541	**506616**	SS	
3.5 V6 *LHCP*	E	3523	EGE	A	Y		10/94 ▸	4663296	**506539**	SS	
Neon												
2.0 i 16V *SM7C, SM7Y*	E	1996	ECB, ECC	M	Y		10/93 ▸ 12/98	4667660	**506538**	CR	
2.0 i 16V *SN7C*	E	1996	ECB	A	Y		10/93 ▸ 12/98	4667660	**506538**	CR	
New Yorker												
3.5 V6 *LHCH*	E	3523	EGE	A	Y		01/93 ▸ 09/94	4556541	**506616**	SS	
3.5 V6 *LHCH*	E	3523	EGE	A	Y		10/94 ▸	4663296	**506539**	SS	
PT Cruiser												
1.6 i 16V *Y4B*	E	1598	EJD	M	Y		11/01 ▸	4667660	**506538**	CR	
2.0 i 16V *Z4B9, Y4B9*	E	1996	ECC	M	Y		09/00 ▸	4667660	**506538**	CR	
2.0 i 16V *Y4B9, Z4B9*	E	1996	ECC	A	Y		09/00 ▸	4667660	**506538**	CR	
2.4 i 16V *Y4BB, Z4BB*	E	2429	EDZ	M	Y		06/00 ▸	4694307AB	**506605**	CR	

• **New** Nouveau **Nuevo** Novo **Nuovo** Nieuw **Neu** Yeni Новый Nou

Valeo

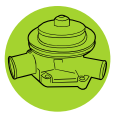

Type Ctr.		cc						OE	Valeo		
CHRYSLER (.../...)											
PT Cruiser (.../...)											
2.4 i 16V *Z4BB, Y4BB*	E	2429	EDZ	A	Y		06/00 ▸	4694307AB	**506605**	CR	
Sebring (2000>2005)											
2.0 i 16V	E	1996	ECC	A	Y		03/00 ▸	4667660	**506538**	CR	
2.7 i V6 24V	E	2736	EES	A	N		03/00 ▸ 03/07	4663732	●**506803**	G	
Sebring											
2.0 CRD *JSG41, JSZ27, JSZ41 JSC41, JSC27*	D	1968	ECD	M	Y		03/07 ▸ 03/11	68000693AB	**506699**	CR	
Stratus											
2.0 i 16V *MN6C*	E	1996	ECB	M	Y		01/94 ▸	4667660	**506538**	CR	
2.0 i 16V	E	1996	ECB	A	Y		01/94 ▸	4667660	**506538**	CR	
2.4 i 16V	E	2429	EDZ	M	Y		01/94 ▸	4694307AB	**506605**	CR	
2.4 i 16V	E	2429	EDZ	A	Y		01/94 ▸	4694307AB	**506605**	CR	
Vision											
3.5 V6 *EB6F*	E	3523	EGE	A	Y		10/92 ▸ 09/94	4556541	**506616**	SS	
3.5 V6 *EB6F*	E	3523	EGE	A	Y		10/94 ▸	4663296	**506539**	SS	
Voyager (83>91)											
3.0	E	2972	EFA	A	Y		03/89 ▸ 02/91	MD997244	**506408**	SS	
Voyager (91>95)											
2.5 i 24V *HN5KR, HN5K*	E	2501	EDM	M	Y		03/91 ▸ 10/95	4621172	**506455**	N	
3.3 i *HB5R, KB5R, KB5RP*	E	3301	EGA	A	Y		04/92 ▸ 10/95	4448878	**506454**	N	
2.5 TD *HN5M, HN5MR*	D	2499	MOU	M	Y		01/93 ▸ 10/95	4864566	**506692**	N	506589
Voyager (96>2001)											
2.0 i 16V	E	1996	ECB	M	Y		10/96 ▸ 03/01	4667660	**506538**	CR	
2.0 i 16V	E	1996	ECB	M	Y		10/96 ▸ 12/97	4621489	**506478**	CR	
2.4 i 16V	E	2429	EDZ	M	Y		01/98 ▸ 03/01	4694307AB	**506605**	CR	
3.3 i	E	3301	EGA	A	Y		01/98 ▸ 03/01	5010898AA	**506454**	N	
3.8 i	E	3778	EGH	A	Y		01/98 ▸ 03/01	5010898AA	**506454**	N	
2.5 TD	D	2499	ENC	M	Y		01/96 ▸ 03/01	5010898AA	**506454**	N	
2.5 i		-		M	Y		01/96 ▸ 03/01	4694307AB	**506605**	CR	
Voyager (2001>2004)											
2.4 i 16V	E	2429	EDZ	M	Y		03/01 ▸	4694307AB	**506605**	CR	
Ypsilon											
1.2 i 69	E	1242	169A5000	M	N		09/11 ▸	55221397	**506967**	CR	
1.3 M-Jet 16V	D	1248	199B1.000	M	Y		09/11 ▸	46815125	●**506983**	V	
CITROËN											
AX (86>91)											
1.0 *ZAZ/A/AB/AE/AR/ART/AT/E/H/HB*	E	954	TU9	M	Y		09/86 ▸ 1991	1201E3	**506035**	CR	
1.1,1.1 i *ZAD/A/B/C, ZAZ/B/BD/BT/F J/JD/M/P/S*	E	1124	TU1M, TU1, TU1CP	M	Y		09/86 ▸ 1991	1201E3	**506035**	CR	
1.3 *ZAZL*	E	1294	TU24	M	Y		04/87 ▸ 1991	1201E3	**506035**	CR	
1.4,1.4 i *ZAD/D/E, ZAZ/C/CD/D/DD/K KD/N/R/W/X/Y*	E	1360	TU3A, TU3, TU3M, TU3S, TU3CP	M	Y		09/86 ▸ 1991	1201E3	**506035**	CR	
1.4 i *ZAZW, ZAD/DB/EB*	E	1360	TU3M	M	Y		07/89 ▸ 1991	120158	**506290**	CR	
1.4 D *ZAZ/T/TT/U/V*	D	1360	TUD3	M	Y		09/88 ▸ 1991	1201E3	**506035**	CR	
AX (91>98)											
- *ZAZZ*	L	0	SA13		Y		07/94 ▸ 07/98	120197	**506290**	CR	
1.0,1.0 i *ZAL/H/J, ZAZ/A/AT/H*	E	954	TU9, TU9M	M	Y		05/91 ▸ 07/98	1201E3	**506035**	CR	
1.1,1.1 i *ZALAT, ZAD/A/AB/AC/B/BB BC, ZAZ/B/BT/J*	E	1124	TU1, TU1M	M	Y		05/91 ▸ 07/96	1201E3	**506035**	CR	

• **New** Nouveau **Nuevo** Novo **Nuovo** Nieuw **Neu** Yeni Новый Nou

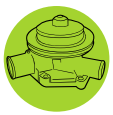

Valeo

Water pump
Pompe à eau
Bomba de água
Bomba de água
Pompa acqua
Waterpomp

Wasserpumpen
Pompa wodna
Vízpumpa
Su pompasi
ВОДЯНОЙ НАСОС

Vodní pumpa
Pompa de apă

			cc						OE	Valeo		
CITROËN (.../...)												
AX (91>98) (.../...)												
1.4,1.4 i	ZAD/D/DB/E/EB/H/J/M/N ZAL/B/C/F/G, ZAZ/D/Y	E	1360	TU3MC, TU3.2, TU3M, TU3S TU3J2	M	Y		05/91 ▸ 07/96	1201E4	**506290**	CR	
1.4,1.4 i	ZAD/M/N, ZAZ/D/Y	E	1360	TU3S, TU3J2	M	Y		05/91 ▸ 07/96	1201E3	**506035**	CR	
1.4 D	ZAD/F/G, ZAZ/T/TT/U	D	1360	TUD3	M	Y		05/91 ▸ 07/94	1201E3	**506035**	CR	
1.5 D	ZAK/E/ET/F	D	1527	TUD5	M	Y		07/94 ▸ 07/96	1201E6	**506290**	CR	
BX												
1.1	XBEP	E	1124	TU1	M	Y		07/88 ▸ 1991	1201E3	**506035**	CR	
1.4 GPL	XBERBB	G	1360	TU3A	M	Y		07/89 ▸	1201E3	**506035**	CR	
1.4 GPL	XBERBB	G	1360	TU3A	M	Y		10/91 ▸	120158	**506290**	CR	
1.4,1.4 i	XBFG, XBE/C/R/RB/S, XBH/C D, XBX/A/D/DA/DBC/T/Y/YE	E	1360	TU3A, TU3M, XY6D, XY6, XY7CP XY6C	M	Y		07/86 ▸	1201E3	**506035**	CR	
1.4	XBHY, XBE/R/RB	E	1360	TU3A, TU3.2	M	Y		10/91 ▸	120158	**506290**	CR	
1.6,1.6 GPL,1.6 i	XBE/A/B/E/EBC, XBF/A/L/V W, XBH/J/P, XBX/B/BE/E EBC/EE/K/S/W/X	E	1580	XU52C, XU51C, XU5S, XU5CP XU5M, XU5J, 171, XU5JA XU5J2, XU5STR	M	Y		09/82 ▸ 1993	120163	**506011**	CR	
1.6,1.6 i	HBH/Z, XBH/J/P/Y, XBX/B/E	E	1580	XU5M, XU51C, XU52C, XU5JA	M	Y		03/91 ▸	120161	**506029**	CR	
1.6	XBXBAA	E	1580	XU52C, XU5S	A	Y		07/84 ▸ 08/91	120163	**506011**	CR	
1.6,1.6 i	HBHYA, XBXBAA	E	1580	XU5M, XU52C	A	Y		09/91 ▸	120161	**506029**	CR	
1.9,1.9 i	XBE/G/H/W/Y/Z, XBF/E/F/N P/S/SC/T/X/Y/Z, XBH/A/K KB/L/LB/M/N, XBX/G/H/J/M N/TC	E	1905	XU92C+, XU9J2, XU9J1, XU9M XU9S, XU92C, XU9JA, XU9	M	Y		07/84 ▸	120163	**506011**	CR	
1.9,1.9 i,1.9 i 16S	XBE/J/W/Y, XBF/C/X/Y/Z XBH/A/K/KB/L/LB/M/N	E	1905	XU92C+, XU9JA, XU9J2, XU9J4 XU9M	M	Y		07/87 ▸	120161	**506029**	CR	
1.9 i	XBFR	E	1905	XU9J2	M	Y		07/89 ▸ 03/90	120160	**506014**	CR	
1.9,1.9 i	XBE/GA/HA/YA, XBF/SA/TA YA, XBH/KA/LA, XBX/GA/HA MA	E	1905	XU92C, XU9J2, XU92C+, XU9JA XU9J1, XU9S	A	Y		07/84 ▸	120163	**506011**	CR	
1.9,1.9 i	XBFYA, XBE/YA, XBXMA, XBH KA/LA	E	1905	XU92C+, XU9JA, XU9J1, XU9J2	A	Y		09/91 ▸	120161	**506029**	CR	
1.7 D	XBED, XBXP	D	1769	XUD7	M	Y		10/84 ▸ 06/91	120163	**506011**	CR	
1.7 D,1.7 TD	XBE/D/K/L/X, XBXP, XBH/R S	D	1769	XUD7TE, XUD7	M	Y		09/86 ▸	120160	**506014**	CR	
1.9 D	XBX/C/CE/F/FE/N	D	1905	XUD9	M	Y		07/83 ▸	120163	**506011**	CR	
1.9 D	XBH/E/F, XBX/C/CE/CT/F/FB/FE/FT/U/V	D	1905	XUD9A, XUD9	M	Y		07/85 ▸	120160	**506014**	CR	
1.9 D	XBXCA	D	1905	XUD9	A	Y		07/83 ▸ 08/86	120163	**506011**	CR	
1.9 D	XBX/CA/CAA	D	1905	XUD9A, XUD9	A	Y		09/86 ▸	120160	**506014**	CR	
C1												
1.0 i 12V	PMCFAC, PNCFAC	E	998	384F(CFA)	M	Y		06/05 ▸	1201H0	**506852**	SS	
1.4 HDi	PM8HTC, PN8HTC	D	1398	DV4TD	M	Y		06/05 ▸	1201G8	**506714**	CR	
C2												
1.1 i	JGH/FXB/FXC, JMH/FXB/FXC	E	1124	TU1JP, TU1A	M	Y		09/03 ▸	1201G0	**506704**	CR	
1.4 i	JGK/FVB, JMK/FVB/FVC	E	1360	TU3JP, TU3A	M	Y		09/03 ▸	1201G0	**506704**	CR	
1.4 i 16V	JMKFUC	E	1360	ET3J4	M	Y		01/06 ▸	1201G2	**506721**	CR	
1.6 i 16V	JGN/FUC, JMN/FSC/FUC	E	1587	TU5JP4, TU5JP4S	M	Y		09/03 ▸	1201E5	**506595**	CR	
1.4 HDi	JG8/HXB/HZC, JM8/HXB/HZC	D	1398	DV4TD	M	Y		09/03 ▸	1201G8	**506714**	CR	
1.6 HDi 16V	JM9HZC	D	1560	DV6TED4	M	Y		11/05 ▸ 01/10	1201G9	**506715**	CR	
C3 (2002>2005)												
1.1 i	FCH/FXB/FXC, FRHFXB, FNH/FXB/FXC	E	1124	TU1JP	M	Y		04/02 ▸ 10/05	1201G0	**506704**	CR	
1.4 i	FCK/FVB/FVC, FNK/FVB/FVC	E	1360	TU3JP	M	Y		04/02 ▸ 10/05	1201G0	**506704**	CR	
1.4 i 16V	FNKFUB, FCK/FU/FUC	E	1360	ET3J4	M	Y		12/03 ▸ 10/05	1201G2	**506721**	CR	
1.4 i	FCK/FVE/FVF, FNK/FVE/FVF	E	1360	TU3JP	A	Y		04/02 ▸ 10/05	1201G0	**506704**	CR	
1.6 i 16V	FNNFUB, FCN/FU//FUB	E	1587	TU5JP4	M	Y		04/02 ▸ 10/05	1201E5	**506595**	CR	
1.4 HDi 16V	FN8HYB, FR8HYB, FC8/HYB	D	1398	DV4TED4	M	Y		04/02 ▸	1201G8	**506714**	CR	
1.4 HDi	FN8HZB, FR8XZB, FC8/HZ HZB	D	1399	DV4TD	M	Y		04/02 ▸	1201G8	**506714**	CR	
1.6 HDi 16V	FC9HXC	D	1560	DV6ATED4	M	Y		06/05 ▸ 10/05	1201G9	**506715**	CR	
C3 (2005>)												
1.1 i	FCHFXC	E	1124	TU1A	M	Y		11/05 ▸	1201G0	**506704**	CR	

• **New** Nouveau **Nuevo** Novo **Nuovo** Nieuw **Neu** Yeni Новый Nou

Valeo

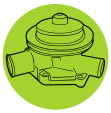

CITROËN (.../...)

C3 (2005>) (.../...)

1.4 i	FCK/FVB/FVC	E	1360	TU3JP, TU3A	M	Y		11/05 ▸	1201G0	**506704**	CR	
1.4 i 16V	FCKFUC	E	1360	ET3J4	M	Y		11/05 ▸	1201G2	**506721**	CR	
1.6 i 16V	FCNFUC	E	1587	TU5JP4	M	Y		11/05 ▸	1201E5	**506595**	CR	
1.4 HDi	FC8HZC	D	1398	DV4TD	M	Y		11/05 ▸	1201G8	**506714**	CR	
1.6 HDi 16V	FC9/HXC/HZC	D	1560	DV6ATED4, DV6TED4	M	Y		11/05 ▸	1201G9	**506715**	CR	

C3 Pluriel

1.4 i	HBKFVB	E	1360	TU3JP	M	Y		05/03 ▸	1201G0	**506704**	CR	
1.6 i 16V	HBNFUB	E	1587	TU5JP4	M	Y		05/03 ▸	1201E5	**506595**	CR	
1.4 HDi	HB8HZB	D	1399	DV4TD	M	Y		02/04 ▸	1201G8	**506714**	CR	

C4

1.4 i 16V	LAKFUC, LCKFUC	E	1360	ET3J4	M	Y		11/04 ▸	1201G2	**506721**	CR	
1.6 i 16V	LANFUC, LCNFUC	E	1587	TU5JP4	M	Y		11/04 ▸	1201E5	**506595**	CR	
1.6 i 16V	LANFUF, LCNFUF	E	1587	TU5JP4	A	Y		11/04 ▸	1201E5	**506595**	CR	
2.0 i 16V	LARFNC, LCRFNC	E	1997	EW10J4	M	Y	20 teeth	11/04 ▸	1201J1	**506918**	CR	506720
2.0 i 16V	LCRFJF	E	1997	EW10A	A	Y	20 teeth	11/04 ▸	1201J1	**506918**	CR	506720
2.0 i 16V	LAR/FJC/FKC/FNC, LCR/FJC FNC	E	1997	EW10A,EW10J4,EW10J4S	M	Y	20 teeth	11/04 ▸ 07/08	1201K1	**506918**	CR	
2.0 i 16V	LARFKC	E	1997	EW10J4S	M	Y	20 teeth	11/04 ▸	1201G5	**506918**	CR	
2.0 i 16V	LAR/FJC/FKC/FNC, LDRFJ LCR/FJC/FNC	E	1997	EW10A,EW10J4,EW10J4S	M	Y	20 teeth	11/04 ▸ 12/10	1201L2	**506918**	CR	
2.0 i 16V	LCRFJF	E	1997	EW10A	A	Y	20 teeth	11/04 ▸ 07/08	1201K1	**506918**	CR	
1.6 HDi 16V	LA9/HXC/HYB/HZC, LC9/HXC HYB/HZC, LG9/HXC/HZC	D	1560	DV6TED4, DV6ATED4	M	Y		11/04 ▸	1201G9	**506715**	CR	
2.0 HDi 16V	LARHRH, LCRHRH	D	1997	DW10BTED4	M	Y		11/04 ▸	1201E8	**506719**	CR	
2.0 HDi 16V	LARHR, LCRHR	D	1997	DW10BTED4	A	Y		11/04 ▸	1201E8	**506719**	CR	

C4 Aircross

2.0 i 16V	BUAF	E	1998	4B11MMC	M	Y		03/12 ▸	1201K4	▲**526006**	N	
2.0 i 16V	BUAF	E	1998	4B11MMC	A	Y		03/12 ▸	1201K4	▲**526006**	N	

C4 Picasso (2006>)

1.8 i 16V	UA6FYC, UD6FYC	E	1749	EW7A	M	Y	20 teeth	09/06 ▸	1201K1	**506918**	CR	
1.6 HDi 16V	UA9/HZC/HZH, UD9/HZC/HZH	D	1560	DV6TED4	M	Y		09/06 ▸	1201G9	**506715**	CR	
2.0 HDi 16V	UARHRH, UDRHRH	D	1997	DW10BTED4	M	Y		09/06 ▸	1201E8	**506719**	CR	
2.0 HDi 16V	UDRHRJ	D	1997	DW10BTED4	A	Y		03/07 ▸	1201E8	**506719**	CR	
2.0 i 16V	UARFJH, UDRFJH	E	1997	EW10A	M	Y	20 teeth	09/06 ▸	1201J2	**506918**	CR	
2.0 i 16V	UARFJF, UDRFJF	E	1997	EW10A	A	Y	20 teeth	09/06 ▸	1201L2	**506918**	CR	

C5 (2001>2004)

1.8 i 16V	DC6FZB, DE6FZB	E	1749	EW7J4	M	Y	20 teeth	02/01 ▸	1201J1	**506918**	CR	506720
1.8 i 16V	DC6FZE	E	1749	EW7J4	A	Y	20 teeth	02/01 ▸	1201J1	**506918**	CR	506720
1.8 i 16V	DC6/FZB/FZC, DE6/FZB/FZC	E	1749	EW7J4	M	Y	20 teeth	02/01 ▸ 08/04	1201L2	**506918**	CR	
1.8 i 16V	DC6FZB, DE6FZB	E	1749	EW7J4	M	Y	20 teeth	02/01 ▸	1201F4	**506918**	CR	
1.8 i 16V	DC6/FZE/FZF	E	1749	EW7J4	A	Y	20 teeth	02/01 ▸ 08/04	1201L2	**506918**	CR	
1.8 i 16V	DC6FZE	E	1749	EW7J4	A	Y	20 teeth	02/01 ▸	1201F4	**506918**	CR	
2.0 HPi 16V,2.0 i 16V	DCR/FNB/FNC, DER/FNB/FNC LZB/LZC	E	1997	EW10D, EW10J4	M	Y	20 teeth	02/01 ▸	1201J1	**506918**	CR	506720
2.0 i 16V	DCR/FNE/FNF, DER/FNE/FNF	E	1997	EW10J4	A	Y	20 teeth	02/01 ▸	1201J1	**506918**	CR	506720
2.0 HPi 16V,2.0 i 16V	DCR/FNB/FNC/LZB, DER/FNB FNC/LZB/LZC	E	1997	EW10D,EW10J4	M	Y	20 teeth	02/01 ▸ 08/04	1201L2	**506918**	CR	
2.0 HPi 16V,2.0 i 16V	DCR/FNB/LZB, DER/FNB/FNC LZB/LZC	E	1997	EW10D,EW10J4	M	Y	20 teeth	02/01 ▸	1201F4	**506918**	CR	
2.0 i 16V	DCR/FNE, DER/FNE/FNF	E	1997	EW10J4	A	Y	20 teeth	02/01 ▸	1201F4	**506918**	CR	
2.0 i 16V	DCR/FNE/FNF, DER/FNE/FNF	E	1997	EW10J4	A	Y	20 teeth	02/01 ▸ 08/04	1201L2	**506918**	CR	
2.0 HDi	DCR/HYB/HZB, DER/HSB/HYB HZB	D	1997	DW10ATED, DW10TD	M	Y		02/01 ▸	1201C4	**506575**	CR	
2.0 HDi	DCR/HZE/HZF, DER/HZE/HZF	D	1997	DW10ATED	A	Y		02/01 ▸	1201C4	**506575**	CR	
2.2 HDi 16V	DC4HXB, DE4HXB	D	2179	DW12TED4	M	Y		02/01 ▸	1201E8	**506719**	CR	
2.2 HDi 16V	DC4HXE, DE4HXF	D	2179	DW12TED4	A	Y		02/01 ▸	1201E8	**506719**	CR	

C5 (2004>2008)

1.8 i 16V	RC6/FYC/FZB/FZC, RE6/FYC FZB/FZC	E	1749	EW7A, EW7J4	M	Y	20 teeth	09/04 ▸	1201G4	**506918**	CR	506720

• **New** Nouveau **Nuevo** Novo **Nuovo** Nieuw **Neu** Yeni Новый Nou

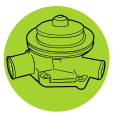

Valeo

Water pump
Pompe à eau
Bomba de água
Bomba de água
Pompa acqua
Waterpomp
Wasserpumpen
Pompa wodna
Vízpumpa
Su pompasi
ВОДЯНОЙ НАСОС
Vodní pumpa
Pompa de apă

		Type Ctr.		CC					2 3	OE	Valeo		
CITROËN (.../...)													
C5 (2004>2008) (.../...)													
1.8 i 16V	RC6/FYC/FZB/FZC, RE6/FYC FZB/FZC	E	1749	EW7A,EW7J4	M	Y	20 teeth	09/04 ▸		1201J2	**506918**	CR	
1.8 i 16V	RC6/FYC/FZB/FZC, RE6/FYC FZB/FZC	E	1749	EW7A,EW7J4	M	Y	20 teeth	09/04 ▸ 03/08		1201K1	**506918**	CR	
2.0 i 16V	RCRFJC, RERFJC	E	1997	EW10A	M	Y	20 teeth	09/04 ▸		1201G4	**506918**	CR	506720
2.0 i 16V	RCRFJF, RERFJF	E	1997	EW10A	A	Y	20 teeth	09/04 ▸		1201G4	**506918**	CR	506720
2.0 i 16V	RCRFJC, RERFJC	E	1997	EW10A	M	Y	20 teeth	09/04 ▸		1201F5	**506918**	CR	
2.0 i 16V	RCRFJC, RERFJC	E	1997	EW10A	M	Y	20 teeth	09/04 ▸ 03/08		1201K1	**506918**	CR	
1.6 HDi 16V	RC9/HYB/HZC, RE9/HYB/HZC	D	1560	DV6TED4	M	Y		09/04 ▸		1201G9	**506715**	CR	
2.0 HDi 16V	RCR/HRG/HRH, RER/HRG/HRH	D	1997	DW10BTED4	M	Y		09/04 ▸		1201E8	**506719**	CR	
2.0 HDi 16V	RCR/HRG/HRH, RER/HRG/HRH	D	1997	DW10BTED4	A	Y		11/05 ▸		1201E8	**506719**	CR	
2.2 HDi 16V	RC4HXE, RE4HXE	D	2179	DW12TED4	A	Y		09/04 ▸ 12/05		1201E8	**506719**	CR	
2.2 HDi 16V	RC4/HPH/HTH, RE4/HPH/HTH	D	2179	DW12BTED4	M	Y		02/06 ▸		1201J6	●**506978**	CR	
2.2 HDi 16V	RC4/HRJ/HSJ, RE4/HRJ/HSJ	D	2179	DW12BTED4	A	Y		09/06 ▸		1201J6	●**506978**	CR	
C5 (2008>)													
2.0 i Bioflex 16V	RDRFJC, RWRFJC	F	1997	EW10A	M	Y	20 teeth	05/08 ▸		1201K1	**506918**	CR	
1.8 i 16V	RD6FYC, RW6FYC	E	1749	EW7A	M	Y	20 teeth	03/08 ▸		1201L2	**506918**	CR	
1.6 HDi	RD9HZC	D	1560	DV6TED4	M	Y		03/08 ▸		1201G9	**506715**	CR	
2.0 HDi	RDRHRH	D	1997	DW10BTED4	M	Y		03/08 ▸		1201E8	**506719**	CR	
2.0 HDi	RDRHRJ	D	1997	DW10BTED4	A	Y		03/08 ▸		1201E8	**506719**	CR	
2.7 HDi V6	RDUHZJ, RWUHZJ	D	2720	DT17BTED4	A	Y		03/08 ▸		1201G6	**506952**	N	
C6													
2.2 HDi 16V	TD4/HPH/HTH	D	2179	DW12BTED4	M	Y		10/06 ▸		1201J6	●**506978**	CR	
2.2 HDi 16V	TD4HTJ	D	2179	DW12BTED4	A	Y		10/06 ▸		1201J6	●**506978**	CR	
2.7 HDi V6 24V	TDUHZJ	D	2720	DT17BTED4	A	Y		12/05 ▸		1201G6	**506952**	N	
C8													
2.0 i 16V	EAR/FNC, EBR/FJC/FNC	E	1997	EW10J4, EW10A	M	Y	20 teeth	06/02 ▸		1201J1	**506918**	CR	506720
2.0 i 16V	EBR/FJF/FNF	E	1997	EW10J4, EW10A	A	Y	20 teeth	06/02 ▸		1201J1	**506918**	CR	506720
2.0 i 16V	EARFNC, EBRFNC	E	1997	EW10J4	M	Y	20 teeth	06/02 ▸		1201F4	**506918**	CR	
2.0 i 16V	EBRFNF	E	1997	EW10J4	A	Y	20 teeth	06/02 ▸		1201F4	**506918**	CR	
2.0 i 16V	EAR/FNC, EBR/FJC/FNC	E	1997	EW10A,EW10J4	M	Y	20 teeth	06/02 ▸		1201L2	**506918**	CR	
2.0 i 16V	EBR/FJF/FNF	E	1997	EW10A,EW10J4	A	Y	20 teeth	06/02 ▸		1201L2	**506918**	CR	
2.2 i 16V	EA3FZC, EB3FZC	E	2230	EW12J4	M	Y	20 teeth	06/02 ▸		1201F5	**506918**	CR	
2.0 HDi 16V	EARHTB, EBRHTB	D	1997	DW10ATED4	M	Y		06/02 ▸		1201C4	**506575**	CR	
2.0 HDi 16V	EBR/HKH/HRH	D	1997	DW10UTED4, DW10BTED4	M	Y		04/06 ▸		1201E8	**506719**	CR	
2.0 HDi 16V	EAR/HME, EBR/HME/HWB	D	1997	DW10ATED4	A	Y		06/02 ▸		1201C4	**506575**	CR	
2.2 HDi 16V	EA4/HWB/HWG, EB4/HWB/HWG	D	2179	DW12TED4	M	Y		06/02 ▸ 06/06		1201E8	**506719**	CR	
2.2 HDi 16V	EB4HTH	D	2179	DW12BTED4	M	Y		12/07 ▸		1201J6	●**506978**	CR	
2.2 HDi 16V	EB4HTH	D	2179	DW12BTED4	A	Y		12/07 ▸		1201J6	●**506978**	CR	
C Crosser													
2.0 i 147 16V		E	1998	4B11MMC	M	Y		01/11 ▸		1201K4	▲**526006**	N	
2.4 i 16V	VUSFZC, VVSFZC	E	2360	4B12MMC	M	Y		01/08 ▸		1201J9	▲**526006**	N	
2.4 i 16V	VUSFZF, VVSFZF	E	2360	4B12MMC	A	Y		01/08 ▸		1201K4	▲**526006**	N	
2.2 HDi 16V	VV4HNH, VU4/HK8/HNH	D	2179	DW12ME5,DW12MTED4	M	Y		07/07 ▸		1201J6	●**506978**	CR	
2.2 HDi 16V	VU4HNH	D	2179	DW12MTED4	M	Y		07/07 ▸		1201H7	●**506978**	CR	
CX													
2.5 i,2.5 i Turbo 2.5 i Turbo 2	MAN/G/GA/HH/J/K/KC/P	E	2500	M25	M	Y		07/83 ▸ 1989		95548541	**506178**	V+V	
2.5 D,2.5 D Turbo 2.5 D Turbo 2	MAM/M/N/S, MAN/B/C/D/T/U/V	D	2500	M25	M	Y		02/79 ▸ 1991		95619748	**506178**	V+V	
Evasion (94>98)													
1.8 i	U6UE	E	1761	XU7JP	M	Y		07/96 ▸ 09/98		120161	**506029**	CR	
2.0 i,2.0 i Turbo CT	U6U/A/B	E	1998	XU10J2CTEL3, XU10J2C	M	Y		07/94 ▸ 09/98		120191	**506117**	CR	
1.9 TD 7390 ▸	U6U/C/J/J/8/J/T	D	1905	XUD9BTF, XUD9TEF, XUD9TF	M	Y		02/97 ▸ 09/98		1201A8	**506574**	CR	
1.9 TD ▸ 7389	U6U/C/J/J/8/J/T	D	1905	XUD9BTF, XUD9TEF, XUD9TF	M	Y		10/94 ▸ 01/97		1201A4	**506117**	CR	

• **New** Nouveau **Nuevo** Novo **Nuovo** Nieuw **Neu** Yeni Новый Nou

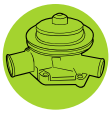

			CC						OE	Valeo		
CITROËN (.../...)												
Evasion (94>98) (.../...)												
2.1 TD 12V	U6UW	D	2088	XUD11BTE	M	Y		04/96 ▸ 09/98	1201C6	**506291**	CR	
Evasion (98>2002)												
1.8 i	U6U/E/E/1	E	1761	XU7JP	M	Y		10/98 ▸ 05/02	120161	**506029**	CR	
2.0 i 16V	AFRFNC	E	1997	EW10J4	M	Y	20 teeth	07/00 ▸ 05/02	1201J1	**506918**	CR	506720
2.0 i 16V	AFRFNF	E	1997	EW10J4	A	Y	20 teeth	07/00 ▸ 05/02	1201J1	**506918**	CR	506720
2.0 i 16V	AFRFNC	E	1997	EW10J4	M	Y	20 teeth	07/00 ▸ 05/02	1201F4	**506918**	CR	
2.0 i 16V	AFRFNF	E	1997	EW10J4	A	Y	20 teeth	07/00 ▸ 05/02	1201F4	**506918**	CR	
2.0 i 16V	AFRFVB	E	1998	XU10J4R	M	Y		10/98 ▸ 05/02	120193	**506530**	CR	
2.0 i,2.0 i Turbo CT	U6U/A/B/B/T	E	1998	XU10J2C, XU10J2CTEL3	M	Y		10/98 ▸ 05/02	120191	**506117**	CR	
1.9 TD	U6U/C/C/T	D	1905	XUD9BTF	M	Y		10/98 ▸ 05/02	1201A8	**506574**	CR	
2.0 HDi,2.0 HDi 16V	AFR/HWB/HZA	D	1997	DW10ATED, DW10ATED4	M	Y		08/99 ▸ 05/02	1201C4	**506575**	CR	
2.1 TD 12V	U6U/W/W/T	D	2088	XUD11BTE	M	Y		10/98 ▸ 05/02	1201C6	**506291**	CR	
Fukang												
1.4	N2	E	1360	TU3F2	M	Y		07/93 ▸	120158	**506290**	CR	
1.6 i	N2	E	1587	TU5JP	M	Y		07/96 ▸	120158	**506290**	CR	
Saxo (96>99)												
-	S1ZAAZ, S3ZAAZ, S0Z/AAZ	L	0	SA13		Y		01/97 ▸ 08/99	120197	**506290**	CR	
1.0 i	S0C/DYF/DZE/DZF, S3CDZF, S1C/DYF DZE/DZF	E	954	TU9M	M	Y		03/96 ▸ 08/99	1201E3	**506035**	CR	
1.1 i,1.1 i GPL	S0H/DYF/DZC/DZE/DZF/DZG DZW, S3HDZF, S1H/DYF/DZC DZE/DZF/DZG/DZW, S6H/DZC DZF	E	1124	TU1M+	M	Y		03/96 ▸ 08/99	1201E3	**506035**	CR	
1.4 i	S0K/FWB/FXF/FXG/FXT, S1K/FXF/FXG FXT	E	1360	TU3JP	M	Y		03/96 ▸ 08/99	1201E3	**506035**	CR	
1.4 i	S0K/FXD, S1K/FXD/FXT	E	1360	TU3JP	A	Y		04/96 ▸ 08/99	1201E3	**506035**	CR	
1.6 i	S0N/FZF/FZT, S6NFZF, S1N/FZF/FZT	E	1587	TU5JP	M	Y		03/96 ▸ 08/99	1201E4	**506290**	CR	
1.6 i 16V	S6NFXF	E	1587	TU5J4	M	Y		03/96 ▸ 08/99	1201E5	**506595**	CR	
1.6 i	S0NFZD, S1NFZD	E	1587	TU5JP	A	Y		06/96 ▸ 08/99	1201E4	**506290**	CR	
1.5 D	S0V/JXB/JYF/JZC/JZE/JZF, S3VJZF S1V/JXB/JYF/JZC/JZE/JZF	D	1527	TUD5, TUD5B	M	Y		05/96 ▸ 08/99	1201E6	**506290**	CR	
Saxo (99>)												
-	S0ZAAZ, S1ZAAZ	L	0	SA13		Y		09/99 ▸	120197	**506290**	CR	
1.0 i	S0CDZF, S1CDZF	E	954	TU9M	M	Y		09/99 ▸	1201E3	**506035**	CR	
1.1 i,1.1 i GPL	S0HDZF, S1HDZF	E	1124	TU1M+	M	Y		09/99 ▸	1201E3	**506035**	CR	
1.4 i	S0KFXF, S1KFXF	E	1360	TU3JP	M	Y		09/99 ▸	1201E3	**506035**	CR	
1.4 i	S1KFXD	E	1360	TU3JP	A	Y		09/99 ▸	1201E3	**506035**	CR	
1.6 i,1.6 i 16V	S6N/FXF/FZF	E	1587	TU5JP, TU5J4	M	Y		09/99 ▸	1201E4	**506290**	CR	
1.5 D	S1VJZF, S0V/JZC/JZF	D	1527	TUD5	M	Y		09/99 ▸	1201E6	**506290**	CR	
Synergie (95>98)												
1.8 i	U6UE	E	1761	XU7JP	M	Y		07/96 ▸ 09/98	120161	**506029**	CR	
2.0 i	U6UB	E	1998	XU10J2C	M	Y		10/95 ▸ 09/98	120191	**506117**	CR	
1.9 TD ▸ 7390	U6U/C/J	D	1905	XUD9TEF, XUD9BTF	M	Y		01/97 ▸ 09/98	1201A8	**506574**	CR	
1.9 TD ▸ 6992	U6U/C/J	D	1905	XUD9TEF, XUD9BTF	M	Y		10/95 ▸ 01/97	1201A4	**506117**	CR	
Synergie (98>2002)												
2.0 i 16V	AFRFNC	E	1997	EW10J4	M	Y	20 teeth	07/00 ▸ 05/02	1201K1	**506918**	CR	
2.0 i 16V	AFRFNF	E	1997	EW10J4	A	Y	20 teeth	07/00 ▸ 05/02	1201L2	**506918**	CR	
2.0 i	U6UB	E	1998	XU10J2C	M	Y		10/98 ▸	120191	**506117**	CR	
1.9 TD	U6UC	D	1905	XUD9BTF	M	Y		10/98 ▸ 05/02	1201A8	**506574**	CR	
1.9 TD	U6UC	D	1905	XUD9BTF	M	Y		10/98 ▸	1201C6	**506291**	CR	
Visa												
1.6 i	VDPD	E	1580	XU5J	M	Y		10/84 ▸ 07/86	120163	**506011**	CR	
1.6 i	VDPD	E	1580	XU5JA, XU5J		Y		01/85 ▸ 08/86	120163	**506011**	CR	
1.6 i		E	1580	XU5JA		Y		09/86 ▸ 1988	120160	**506014**	CR	

• **New** Nouveau **Nuevo** Novo **Nuovo** Nieuw **Neu** Yeni Новый Nou

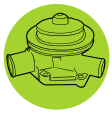

Valeo

Water pump
Pompe à eau
Bomba de água
Bomba de água
Pompa acqua
Waterpomp

Wasserpumpen
Pompa wodna
Vízpumpa
Su pompasi
ВОДЯНОЙ НАСОС

Vodní pumpa
Pompa de apă

	Type Ctr.		cc						OE	Valeo		
CITROËN (.../...)												
Visa (.../...)												
1.8 D *VDV/T/TA/TE*		D	1769	XUD7	M	Y		03/84 ▸ 08/86	120163	**506011**	CR	
1.8 D *VDV/T/TA/TE*		D	1769	XUD7	M	Y		09/86 ▸ 1988	120160	**506014**	CR	
1.8 D		D	1769	XUD7		Y		03/84 ▸ 08/86	120163	**506011**	CR	
1.8 D		D	1769	XUD7		Y		09/86 ▸ 1988	120160	**506014**	CR	
Xantia (93>97)												
1.6 i *X12B*		E	1580	XU5JP	M	Y		08/93 ▸ 12/97	120161	**506029**	CR	
1.8 i *X11/A/E, X16G, X17A, X12/E/F*		E	1761	XU7JP, XU7JB	M	Y		03/93 ▸ 12/97	120161	**506029**	CR	
1.8 i 16V *X13H, X15C, X16C, X12/H*		E	1761	XU7JP4	M	Y		07/95 ▸ 12/97	120198	**506531**	CR	
1.8 i *X19B*		E	1761	XU7JP	A	Y		09/93 ▸ 12/97	120161	**506029**	CR	
2.0 i,2.0 i 16V *X11/F, X14/A/C/F, X15/A/F*		E	1998	XU10J4, XU10J2CTEL3, XU10J2C	M	Y		03/93 ▸ 12/97	120191	**506117**	CR	
2.0 i Turbo CT *X16/D/E*												
2.0 i 16V *X13/E, X19/C/E*		E	1998	XU10J4R	M	Y		07/95 ▸ 12/97	120193	**506530**	CR	
2.0 i *X15E, X17B*		E	1998	XU10J2C	A	Y		09/93 ▸ 12/97	120191	**506117**	CR	
3.0 i V6 24V *X15D*		E	2946	ES9J4	A	Y		03/97 ▸ 12/97	1201C7	**506643**	CR	
1.9 D,1.9 SD,1.9 TD *X14H, X16A, X12/D, X17/E*		D	1905	XUD9SD, XUD9TEF, XUD9BTF	M	Y		01/97 ▸ 12/97	1201A8	**506574**	CR	
7390 ▸ *E/T, X18/A/E*				XUD9A								
1.9 D *X13C*		D	1905	XUD9A	A	Y		01/97 ▸ 12/97	1201A8	**506574**	CR	
7390 ▸												
1.9 D,1.9 TD *X16A, X18A*		D	1905	XUD9TEF, XUD9A	M	Y		06/93 ▸ 01/94	120160	**506014**	CR	
▸ 6264												
1.9 D *X13/C/L*		D	1905	XUD9A	A	Y		08/93 ▸ 01/94	120160	**506014**	CR	
▸ 6264												
1.9 D,1.9 SD,1.9 TD *X14H, X16A, X12/D, X17/E*		D	1905	XUD9TEF, XUD9A, XUD9BTF	M	Y		01/94 ▸ 01/97	1201A4	**506117**	CR	
6265 ▸ 6992 *E/T/F/T/F, X18/A/E*				XUD9SD								
1.9 D *X13/C/L*		D	1905	XUD9A	A	Y		01/94 ▸ 01/97	1201A4	**506117**	CR	
6993 ▸ 7389												
2.1 TD 12V *X12G, X13G, X14G, X15G*		D	2088	XUD11BTE	M	Y		07/95 ▸ 12/97	1201A7	**506291**	CR	
X18D, X11/G												
Xantia (97>2002)												
1.6 i *X1BFZF*		E	1580	XU5JP	M	Y		12/97 ▸ 05/02	120161	**506029**	CR	
1.8 i *X2LFXF, X1L/6AG/FXF*		E	1761	XU7JP, XU7JB	M	Y		12/97 ▸ 05/02	120161	**506029**	CR	
1.8 i 16V,1.8 i GPL 16V *X1L/FYB/FYC/FYF, X2L/FYB*		E	1761	XU7JP4	M	Y		12/97 ▸ 05/02	120198	**506531**	CR	
FYC/FYF												
1.8 i 16V *X1LFYM*		E	1761	XU7JP4	A	Y		12/97 ▸ 05/02	120198	**506531**	CR	
2.0 i Turbo CT *X2RGXF, X7RGXF, X1R/GXF*		E	1998	XU10J2CTEL3	M	Y		12/97 ▸ 05/02	120191	**506117**	CR	
2.0 i 16V *X2RFVF, X7RFVF, X1R/FVF*		E	1998	XU10J4R	M	Y		12/97 ▸ 05/02	120193	**506530**	CR	
FVG												
2.0 i 16V *X1RFVU, X2RFVM*		E	1998	XU10J4R	A	Y		12/97 ▸ 05/02	120193	**506530**	CR	
2.0 i *X1RFXM, X2RFXM*		E	1998	XU10J2C	A	Y		12/97 ▸ 05/02	120191	**506117**	CR	
3.0 i V6 24V *X2XFZF*		E	2946	ES9J4	M	Y		12/97 ▸ 05/02	1201C7	**506643**	CR	
3.0 i V6 24V *X1XFZM*		E	2946	ES9J4	A	Y		12/97 ▸ 05/02	1201C7	**506643**	CR	
1.9 SD,1.9 TD *X1D/HWF/HXF, X2D/HWF/HXF*		D	1905	XUD9SD, XUD9BTF	M	Y		12/97 ▸ 05/02	1201A8	**506574**	CR	
1.9 TD *X1DHXM, X2DHXM*		D	1905	XUD9BTF	A	Y		12/97 ▸ 05/02	1201A8	**506574**	CR	
2.0 HDi *X1R/HYF/HZF, X7RHZF, X2R*		D	1997	DW10ATED, DW10TD	M	Y		10/98 ▸ 05/02	1201C4	**506575**	CR	
HYE/HYF/HZF												
2.1 TD 12V *X2P8CF, X7P8CF, X1P/8CF*		D	2088	XUD11BTE	M	Y		12/97 ▸ 05/02	1201C5	**506291**	CR	
XM (89>94)												
2.0,2.0 i,2.0 i Turbo CT *Y3A/A/B/C/H/J/P/R/X/Y/Z*		E	1998	XU10M, XU10J2, XU102C	M	Y		05/89 ▸ 06/94	120191	**506117**	CR	
				XU10J2TE								
2.0 i,2.0 i Turbo CT *Y3A/CA/HA/RA/XA/YA*		E	1998	XU10J2, XU10J2TE	A	Y		01/90 ▸ 06/94	120191	**506117**	CR	
2.1 TD Turbo D12 12V *Y3AF*		D	2088	XUD11ATE	M	Y		11/89 ▸ 06/94	1201E0	**506291**	CR	
2.1 D D12 *Y3A/E/S*		D	2138	XUD11A	M	Y		09/89 ▸ 06/94	120191	**506117**	CR	
XM (94>2001)												
2.0 i 16V *Y4GB, Y4TX, Y4C/Z*		E	1998	XU10J4R	M	Y		07/94 ▸ 07/01	120193	**506530**	CR	
2.0 i Turbo CT *Y4G/G/M*		E	1998	XU10J2TE	M	Y		07/94 ▸ 07/01	120191	**506117**	CR	
2.0 i Turbo CT *Y4T/S/T*		E	1998	XU10J2TE	A	Y		07/94 ▸ 07/01	120191	**506117**	CR	
2.0 i 16V *Y4T/U/V*		E	1998	XU10J4R	A	Y		07/94 ▸ 07/01	120193	**506530**	CR	
2.1 TD Turbo D12 12V *Y4NW, Y4RN, Y4TD, Y4C/W*		D	2088	XUD11ATE, XUD11BTE	A	Y		07/94 ▸ 06/97	1201E0	**506291**	CR	
7889 ▸												

• **New** Nouveau **Nuevo** Novo **Nuovo** Nieuw **Neu** Yeni Новый Nou

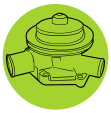

CITROËN (.../...)

XM (94>2001) (.../...)

2.1 TD Turbo D12 12V ▸6778	Y4MZ, Y4G/X/Y/Z	D	2088	XUD11ATE, XUD11BTE	M	Y		07/94 ▸ 06/95	1201E0	**506291**	CR	
2.1 D D12	Y4G/N/W	D	2138	XUD11A	M	Y		07/94 ▸ 06/96	120191	**506117**	CR	
2.5 TD Turbo D	Y4RM, Y4N/X/Y	D	2446	DK5ATE	M	Y		06/96 ▸ 07/01	1201A5	**506596**	vvv	
2.5 TD Turbo D ▸7143	Y4N/X/Y	D	2446	DK5ATE	M	Y		07/94 ▸ 05/96	1201A3	**506582**	vvv	

Xsara (97>2000)

1.4 i ▸8332	N0K/FXB/FXF/FXG, N1K/FXB/FXF/FXG N2K/FXB/FXF	E	1360	TU3JP	M	Y		07/97 ▸	1201E3	**506035**	CR	
1.6 i ▸8385	N0N/FZF, N2NFZF, N1N/FZF/FZG	E	1587	TU5JP	M	Y		07/97 ▸ 10/99	1201E4	**506290**	CR	
1.8 i 16V,1.8 i GPL 16V	N1LFYF, N2LFYF, N6LFYF N0L/FYF	E	1761	XU7JP4	M	Y		07/97 ▸ 08/00	120198	**506531**	CR	
1.8 i	N0L/FXF, N2LFXF, N1L/FXF/FZU	E	1761	XU7JB, XU7JP	M	Y		07/97 ▸ 08/00	120161	**506029**	CR	
1.8 i	N1LFZM, N2LFZM, N0L/FZM	E	1761	XU7JP	A	Y		07/97 ▸ 08/00	120161	**506029**	CR	
2.0 i 16V	N2RFVF, N6RFSF, N1R/FVF	E	1998	XU10J4R, XU10J4RS	M	Y		01/98 ▸ 08/00	1201A1	**506530**	CR	
2.0 i 16V	N1RFVM, N2RFVM	E	1998	XU10J4R	A	Y		06/98 ▸ 08/00	1201A1	**506530**	CR	
1.5 D	N1VJZF, N2VJZF	D	1527	TUD5	M	Y		03/98 ▸ 08/00	1201E6	**506290**	CR	
1.8 D	N0A9AF, N2A9AF	D	1769	XUD7	M	Y		03/98 ▸ 08/00	1201A8	**506574**	CR	
1.9 D	N1WJZF, N2WJZF, N3WJZF, N0W/JZF	D	1868	DW8	M	Y		09/98 ▸ 08/00	1201C4	**506575**	CR	
1.9 D,1.9 SD,1.9 TD	N0D/HYF/JYF, N1D/HYF/JYF N6DHYF, N2D/HVB/HWF/HYF JYF	D	1905	XUD9TE, XUD9A, XUD9SD XUD9BSD	M	Y		07/97 ▸ 08/00	1201A8	**506574**	CR	
2.0 HDi	N1RHYF, N2RHYF, N6RHYF N0R/HYF	D	1997	DW10TD	M	Y		03/99 ▸ 08/00	1201C4	**506575**	CR	

Xsara (2000>)

1.4 i	N1KFWB, N2KFWB, N0K/FWB	E	1360	TU3JP	M	Y			1201G0	**506704**	CR	
1.4 i	N1KFWB, N2KFWB, N0K/FWB	E	1360	TU3JP	M	Y		09/00 ▸	1201E3	**506035**	CR	
1.6 i 16V	N1NFUB, N2NFUB, N0N/FUB	E	1587	TU5JP4	M	Y		09/00 ▸	1201E5	**506595**	CR	
1.6 i 16V	N1NFUN, N2NFUB, N0N/FUN	E	1587	TU5JP4	A	Y		09/00 ▸	1201E5	**506595**	CR	
2.0 i 16V	N1RFNB, N2RFNB, N0R/FNB	E	1997	EW10J4	M	Y	20 teeth	09/00 ▸	1201J1	**506918**	CR	506720
2.0 i 16V	N1RFNN, N2RFNN, N0R/FNN	E	1997	EW10J4	A	Y	20 teeth	09/00 ▸	1201J1	**506918**	CR	506720
2.0 i 16V	N0R/FN1/FNB, N1R/FN1/FNB N2R/FN1/FNB	E	1997	EW10J4	M	Y	20 teeth	09/00 ▸ 08/05	1201K1	**506918**	CR	
2.0 i 16V	N1RFNB, N2RFNB, N0R/FNB	E	1997	EW10J4	M	Y	20 teeth	09/00 ▸	1201F4	**506918**	CR	
2.0 i 16V	N0RFSB	E	1998	XU10J4RS	M	Y		09/00 ▸	1201A1	**506530**	CR	
1.4 HDi	N18HZB, N28HZB, N08/HZB	D	1399	DV4TD	M	Y		01/03 ▸	1201G8	**506714**	CR	
1.9 D	N1WJYB, N2WJYB, N0W/JYB	D	1868	DW8B	M	Y		09/00 ▸	1201C4	**506575**	CR	
2.0 HDi	N0R/HYB/HZB, N1R/HYB/HZB N2R/HYB/HZB	D	1997	DW10TD, DW10ATED	M	Y		09/00 ▸	1201C4	**506575**	CR	
2.0 HDi	N1RHZN, N2RHZN, N0R/HZN	D	1997	DW10ATED	A	Y		08/01 ▸	1201C4	**506575**	CR	

Xsara Picasso

1.6 i 16V	CHNFU	E	1587	TU5JP4	M	Y		09/05 ▸	1201E5	**506595**	CR	
1.6 i	CHN/FVB/FZA	E	1587	TU5JP	M	Y		12/99 ▸	1201E4	**506290**	CR	
1.8 i 16V	CH6/FZB/FZC	E	1749	EW7J4	M	Y	20 teeth	12/99 ▸	1201J1	**506918**	CR	506720
1.8 i 16V	CH6/FZB/FZC	E	1749	EW7J4	M	Y	20 teeth	12/99 ▸	1201K1	**506918**	CR	
2.0 i 16V	CHRFNE	E	1997	EW10J4	A	Y	20 teeth	01/03 ▸	1201J1	**506918**	CR	506720
2.0 i 16V	CHRFNE	E	1997	EW10J4	A	Y	20 teeth	01/03 ▸	1201F4	**506918**	CR	
1.6 HDi 16V	CH9/HXC/HYB/HZC	D	1560	DV6TED4, DV6ATED4	M	Y		03/04 ▸	1201G9	**506715**	CR	
2.0 HDi	CHR/HYA/HYB	D	1997	DW10TD	M	Y		12/99 ▸	1201C4	**506575**	CR	

ZX

1.1,1.1 i	N2C9, N2A/1/3/4/4/T, N2L 2/2/T/3	E	1124	TU1M, TU1, TU1M+	M	Y		03/91 ▸ 07/98	1201E3	**506035**	CR	
1.4,1.4 i	N2B1, N2D7, N2A/7/9, N2E 1/T/9, N2M1, N2L/7/9	E	1360	TU3MC, TU3.2, TU3M, TU3JP	M	Y		03/91 ▸ 07/98	1201E3	**506035**	CR	
1.6 i	N2B/2/4	E	1580	XU5M, XU5M2	M	Y		03/91 ▸ 08/91	120163	**506011**	CR	
1.6 i	N2B/2/4/5, N2G/1/2	E	1580	XU5JP, XU5M2, XU5M	M	Y		08/91 ▸ 07/98	120161	**506029**	CR	
1.6 i	N2B4A, N2G1A	E	1580	XU5M, XU5JP	A	Y		09/92 ▸ 06/97	120161	**506029**	CR	
1.8 i	N2F2, N2E/3/4	E	1761	XU7JP	M	Y		09/92 ▸ 07/98	120161	**506029**	CR	

• **New** Nouveau **Nuevo** Novo **Nuovo** Nieuw **Neu** Yeni Новый Nou

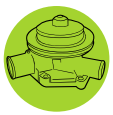

		Type Ctr.	cc					2 3	OE	Valeo		
CITROËN (.../...)												
ZX (.../...)												
1.8 i 16V	*N2/, N2K/5/7*	E	1761	XU7JP4	M	Y		03/97 ▸ 07/98	120198	**506531**	CR	
1.8 i	*N2H4, N2E/3A/4A*	E	1761	XU7JP	A	Y		09/92 ▸ 07/98	120161	**506029**	CR	
1.9 i	*N2B/6/8*	E	1905	XU9JA	M	Y		03/91 ▸ 08/91	120163	**506011**	CR	
1.9 i	*N2B/6/8*	E	1905	XU9JA	M	Y		08/91 ▸ 08/92	120161	**506029**	CR	
1.9 i	*N2B8A*	E	1905	XU9JA	A	Y		09/92 ▸ 08/93	120161	**506029**	CR	
2.0 i,2.0 i 16V	*N2F1, N2J9, N2E/6/7*	E	1998	XU10J4, XU10J2C	M	Y		09/92 ▸ 07/98	120191	**506117**	CR	
2.0 i 16V	*N2L1*	E	1998	XU10J4RS	M	Y		07/95 ▸ 07/98	1201A1	**506530**	CR	
2.0 i	*N2J3*	E	1998	XU10J2C	A	Y		09/92 ▸ 07/98	120191	**506117**	CR	
1.4 D	*N2H6*	D	1360	TUD3	M	Y		07/94 ▸ 07/98	1201E3	**506035**	CR	
1.5 D	*N2M3*	D	1527	TUD5	M	Y		07/94 ▸ 07/98	120725	**506290**	CR	
1.8 D 7390 ▸	*N2C2/T*	D	1769	XUD7	M	Y		02/97 ▸ 07/98	1201A8	**506574**	CR	
1.8 D ▸ 6170	*N2C2/T*	D	1769	XUD7	M	Y		09/92 ▸ 09/93	120160	**506014**	CR	
1.8 D 6993 ▸ 7389	*N2C2/T*	D	1769	XUD7	M	Y		10/93 ▸ 01/97	1201A4	**506117**	CR	
1.9 D,1.9 TD 7390 ▸	*N2C/3/4/4/T/6/7/8, N2E9 N2D/5/5/T/8/9, N2F/4/5 N2H/8/8/T/9, N2J/1/1/T*	D	1905	XUD9A, XUD9TE, XUD9	M	Y		01/97 ▸ 07/98	1201A8	**506574**	CR	
1.9 D 7390 ▸	*N2C/3A, N2L/5/6*	D	1905	XUD9A	A	Y		02/97 ▸ 07/98	1201A8	**506574**	CR	
1.9 D,1.9 TD ▸ 6170	*N2D8, N2C/3/4/4/T/6/7/8 N2F/4/5*	D	1905	XUD9A, XUD9TE, XUD9	M	Y		09/92 ▸ 09/93	120160	**506014**	CR	
1.9 D ▸ 6170	*N2C3A*	D	1905	XUD9A	A	Y		09/92 ▸ 09/93	120160	**506014**	CR	
1.9 D 6171 ▸ 6992	*N2C3A, N2H5*	D	1905	XUD9A	A	Y		10/93 ▸ 01/97	1201A4	**506117**	CR	
1.9 D,1.9 TD 6993 ▸ 7389	*N2C/3/4/4/T/6/7/8, N2E9 N2D/5/5/T/8/9, N2F/4/5 N2J1, N2H/8/8/T/9*	D	1905	XUD9TE, XUD9A, XUD9	M	Y		10/93 ▸ 01/97	1201A4	**506117**	CR	
CITROËN												
Berlingo (96>2002)												
1.1 i,1.1 i GPL 3762434 ▸	*MBHFXW, MAH/DZF/KXB, MFH DZE/FXB*	E	1124	TU1JP, TU1M+	M	Y		07/96 ▸ 12/02	1201G0	**506704**	CR	
1.1 i	*MAH/DZA/DZD/KXB, MFHDZF, MBH/DZE DZF/FXW*	E	1124	TU1M+, TU1JP	M	Y		07/96 ▸ 12/02	1201E3	**506035**	CR	
1.4,1.4 i	*MCKFXF, MBK/5AG/FXF, MFK 5AG/FXB/FXF*	E	1360	TU3JP, TU3.2	M	Y		07/96 ▸ 12/02	1201E3	**506035**	CR	
1.4 i,1.4 i GPL 3666766 ▸	*MBK/6CG/FWB/FXF, MCK/FWB FXF, MFK/6CG/FWB/FXB/FXF*	E	1360	TU3JP	M	Y		07/96 ▸ 12/02	1201G0	**506704**	CR	
1.6 i 16V	*MFN/FUB/FUF*	E	1587	TU5JP4	M	Y		12/00 ▸ 12/02	1201E5	**506595**	CR	
1.8 i	*MFLFXF*	E	1761	XU7JB	M	Y		07/97 ▸ 12/02	120161	**506029**	CR	
1.8 D	*MBA9AE, MCA9AE*	D	1769	XUD7	M	Y		07/96 ▸ 01/97	1201A4	**506117**	CR	
1.8 D	*MBA/9AE/PAG, MEA9AE, MFA9AE, MCA 9AE/9AG*	D	1769	XUD7	M	Y		02/97 ▸ 12/02	1201A8	**506574**	CR	
1.9 D	*MBW/JYB/JYP/JZC/JZF, MEWJZF, MCW JYB/JZF, MFW/JYB/JZF*	D	1868	DW8, DW8B	M	Y		07/98 ▸ 12/02	1201C4	**506575**	CR	
1.9 D	*MCD9BE, MFDJYF, MBD/9BE*	D	1905	XUD9A	M	Y		07/96 ▸ 01/97	1201A4	**506117**	CR	
1.9 D	*MCD9BE, MED9BE, MBD/9BE, MFD/9BE JYF*	D	1905	XUD9A	M	Y		07/96 ▸ 12/02	1201A8	**506574**	CR	
2.0 HDi	*MBR/HYB, MCR/HYB/HYF, MFR HYB/HYF*	D	1997	DW10TD	M	Y		10/99 ▸ 12/02	1201C4	**506575**	CR	
Berlingo (2002>)												
1.1 i	*GBHFXB*	E	1124	TU1JP	M	Y		12/02 ▸	1201G0	**506704**	CR	
1.4 i	*GBK/FVC/FWB, GJK/FVC/FWB*	E	1360	TU3JP, TU3A	M	Y		12/02 ▸	1201G0	**506704**	CR	
1.6 i 16V	*GCNFUB, GJNFUB, GBN/FUB*	E	1587	TU5JP4	M	Y		12/02 ▸	1201E5	**506595**	CR	
1.6 HDi 16V	*GB9/HW/HXC, GC9/HW/HXC GJ9/HW/HXC*	D	1560	DV6BTED4, DV6ATED4	M	Y		01/06 ▸	1201G9	**506715**	CR	
1.9 D	*GCWJYB, GEWJYB, GJWJYB, GBW/JYB*	D	1868	DW8B	M	Y		12/02 ▸	1201C4	**506575**	CR	

• **New** Nouveau **Nuevo** Novo **Nuovo** Nieuw **Neu** Yeni Новый Nou

Valeo

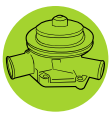

CITROËN (.../...)

Berlingo (2002>) (.../...)

2.0 HDi	GCRHYB, GERHYB, GBR/HYB GJR/HYB/HYK	D	1997	DW10TD	M	Y		12/02 ▸	1201C4	**506575**	CR	

C15

1.0	VDPL, VDSD	E	954	TU9, XV8	M	Y		05/88 ▸ 06/95	1201E3	**506035**	CR	
1.1	VDP/S/T	E	1118	E1A	M	Y		07/87 ▸ 07/88	97521368	**506032**	N	
1.1,1.1 i	VDP/A/F/X/Y/Z, VDS/E/F	E	1124	TU1M, TU1, XW7B1	M	Y		05/88 ▸	1201E3	**506035**	CR	
1.3	VDP/U/V/W	E	1294	G1A	M	Y		07/87 ▸ 07/88	97521368	**506032**	N	
1.4,1.4 i	VD*/, VDP/J/K/M, VDS/A/B C	E	1360	TU3TR, TU3A, XY7, XY7CP	M	Y		05/88 ▸	1201E3	**506035**	CR	
1.4,1.4 i	VD*	E	1360	TU3M, TU3.2	M	Y		02/91 ▸	120158	**506290**	CR	
1.7 D	VDP/B/G	D	1769	XUD7	M	Y		10/84 ▸ 08/86	120163	**506011**	CR	
1.7 D	VDP/B/BF/G/P/PF	D	1769	XUD7	M	Y		09/86 ▸	120160	**506014**	CR	

C25 (81>90)

1.8	280/A10/C10	E	1796	XM7T	M	Y		11/81 ▸ 05/90	9401201400	**506292**	N	
1.8	280/A10/C10	E	1796	XM7T		Y		07/83 ▸ 05/90	9401201400	**506292**	N	
2.0	280/B20/G20	E	1971	XN1T	M	Y		11/81 ▸ 05/90	9401201400	**506292**	N	
2.0	280/B20/C20/G20/G22	E	1971	XN1T		Y		07/83 ▸ 05/90	9401201400	**506292**	N	
1.9 D	280G	D	1905	XUD9A	M	Y		12/87 ▸ 05/90	120160	**506014**	CR	
2.5 D,2.5 TD	280/B50/B90/G50/G52/G90	D	2500	U25	M	Y		07/87 ▸ 05/90	95548541	**506178**	V+V	
2.5 D,2.5 TD	2C50BD, 2C90BD, 280/A50 B50/B54/B90/B94/C50/C54 C90/C94/G50/G54/G90/G94	D	2500	U25		Y		11/81 ▸ 05/90	95548541	**506178**	V+V	

C25 (90>94)

1.8	290/A11/C11	E	1796	XM7T	M	Y		09/90 ▸ 02/94	9401201400	**506292**	N	
2.0	290/A22/A42/B22/B42/B44/C22/C42/C44 G22/G42/G44/H22/H42/J32/J42/K32/K42 L32/L42	E	1971	XN1TA CP, XN1T, XN1TA	M	Y		09/90 ▸ 02/94	9401201400	**506292**	N	
1.9 D	290/B62/C62/G62/H62/M62/S62	D	1905	XUD9A, XUD9AL	M	Y		09/90 ▸ 02/94	120160	**506014**	CR	
2.5 D,2.5 TD	290/A62/B52/B54/B90/B92 B94/C52/C54/C92/C94/G52 G54/G92/G94/GJ2/H52/H92 J52/J92/K52/L52/L92	D	2500	U25	M	Y		09/90 ▸ 02/94	95548541	**506178**	V+V	

Dispatch (95>2003)

1.6 i	U6UG, U6UT	E	1581	160A	M	Y		09/95 ▸ 12/03	120195	**506669**	vvv	
1.6 i	U6UG, U6UT	E	1581	160A	M	Y		09/95 ▸ 12/03	120196	**506670**	vvv	
1.9 D	BDW,JZA, BZW,JZA	D	1868	DW8	M	Y		02/99 ▸ 12/03	1201C4	**506575**	CR	
1.9 D,1.9 TD	BZDHXA, U6KS, BYD/HXA U6U/F/K/R/S/5/U	D	1905	XUD9BTF, XUD9A, XUD9TF	M	Y		02/97 ▸ 12/03	1201A8	**506574**	CR	
1.9 D,1.9 TD ▸ 6992	U6U/F/K/R/U	D	1905	XUD9TF, XUD9A	M	Y		09/95 ▸	1201A4	**506117**	CR	

Dispatch (2004>2006)

1.9 D		D	1868	DW8B	M	Y		01/04 ▸	1201C4	**506575**	CR	
2.0 HDi		D	1997	DW10BTED+L4, DW10BTED	M	Y		01/04 ▸	1201C4	**506575**	CR	

Dispatch (2007>)

2.0 i 16V	XERFJC	E	1997	EW10A	M	Y	20 teeth	03/07 ▸	1201J1	**506918**	CR	506720
1.6 HDi 16V	XC9HUC, XS9HUC, XT9HUC XU9HUC, XV9HUC, XW9HUC XA9/HUC	D	1560	DV6UTED4	M	Y		01/07 ▸	1201G9	**506715**	CR	
2.0 HDi 16V	XAR/HKH/HRH, XCR/HKH/HRH XSRHKH, XDR/HKH/HRH XURHKH, XVRHKH, XWRHKH XTR/HKH/HRH	D	1997	DW10BTED4, DW10UTED4	M	Y		01/07 ▸	1201E8	**506719**	CR	

Jumper (94>2001)

2.0 i	231/A22/A24/A32/B22/B24/C22/C24/G22 G32/H22/H32/N22/N24, 232/B22/F22 G22/H22/J22/K22/L22/N22/N22/N24 321A34, 233/B22/D22/F22/G22/H22 J22/K22/L22/N22	E	1998	XU10J2U	M	Y		02/94 ▸ 12/01	120191	**506117**	CR	

• **New** Nouveau **Nuevo** Novo **Nuovo** Nieuw **Neu** Yeni Новый Nou

CITROËN (.../...)													
Jumper (94>2001) (.../...)													
1.9 D,1.9 TD	*232B72, 231/A62/A72/B72 C72*	D	1905	XUD9TEF, XUD9A	M	Y		02/94 ▸ 12/01	120191	**506117**	CR	
1.9 D,1.9 TD	*232B72, 231/A62/A72/B72 C72*	D	1905	XUD9A, XUD9TEF	M	Y		01/96 ▸ 02/97	1201E4	**506290**	CR	
1.9 D,1.9 TD	*231/A32/A62/A72/A74/A82 A84/B72/B74/B82/B84/C32 C62/C72/C82/E72/G62/G72 G82/H62/H72/H82/N62/N72 V82, 232/B72/B82/C32/C62 C72/C82/G72/G82/H72/H82 V82*	D	1905	XUD9UTF, XUD9A, XUD9TEF XUD9AU	M	Y		02/97 ▸ 12/01	1201A8	**506574**	CR	
2.5 D,2.5 TD	*231/B52/B92/C92/G52/G92 H52/H92/N52/N92, 232/B52 B92/F52/F92/G52/G92/H52 H92/J52/J92/K52/K92/L52 L92/N52/N92/V52/V92, 233 B52/B92/D52/D92/G52/G92 H52/H92/J52/J92/K52/K92 L52/L92/N52/N92*	D	2446	DJ5T, DJ5	M	Y		02/94 ▸ 05/96	1201A3	**506582**	vvv	
2.5 D,2.5 TD,2.5 TDi	*231/A52/B42/B44/B52/B54 B92/B94/C42/C44/C92/G42 G52/G92/H42/H52/H92/J42 J52/J92/V42/V44/V52/V54 V92/V94, 232/B42/B44/B52 B54/B92/B94/F42/F52/F92 G42/G52/G54/G92/H42/H44 H52/H54/H92/J42/J44/J52 J54/J92/J94/K42/K44/K52 K54/K92/K94/L42/L52/L54 L92/N42/N44/N5*	D	2446	DJ5TED, DJ5, DJ5T	M	Y		07/95 ▸ 12/01	1201A5	**506596**	vvv	
2.8 D	*232*	D	2798	8140-63	M	Y		06/99 ▸ 12/01	1201C9	**506514**	N	
Jumper (2002>2006)													
2.0 i	*ZAT/MF, ZBT/MF/MP, ZCT/MF/MM*	E	1998	XU10J2U	M	Y		01/02 ▸ 06/06	120191	**506117**	CR	
2.0 HDi	*ZAA/MF/MP, ZBA/MD/MF/MP*	D	1997	DW10UTD	M	Y		01/02 ▸ 06/06	1201C4	**506575**	CR	
2.2 HDi	*ZAR/MF/MP, ZBR/MD/MF/MH MP, ZCR/MD/MF/MH/MM*	D	2179	DW12TED	M	Y		01/02 ▸ 06/06	1201E8	**506719**	CR	
2.8 HDi	*ZAP/MF/MP, ZCMNCA, ZBP/MD MF/MH/MP, ZCP/MD/MF/MH/MM*	D	2798	F28TDCR	M	Y		01/02 ▸	1201H5	**506514**	N	
Jumper (2006>)													
3.0 HDi 16V	*YCDMF, YBD/MD/MF*	D	2999	F30DT	M	Y		07/06 ▸	1201J4	●**506961**	V	
Jumpy (95>2003)													
1.6 i	*U6UT/8, U6UT/6, U6UN, U6UG, U6UN/R U6UT, U6UT/9, U6UT/5*	E	1581	160A	M	Y		09/95 ▸ 12/03	120195	**506669**	vvv	
1.6 i	*U6UN, U6UT/6, U6UT/8, U6UT, U6UN/R U6UT/9, U6UG, U6UT/5*	E	1581	160A	M	Y		09/95 ▸ 12/03	120196	**506670**	vvv	
2.0 i 16V	*BBRFNC, BDRFNC, BERFNC BZRFNC, BAR/FNC*	E	1997	EW10J4	M	Y	20 teeth	09/00 ▸ 12/03	1201K1	**506918**	CR	
2.0 i 16V	*BARFNF, BDRFNF*	E	1997	EW10J4	A	Y	20 teeth	01/01 ▸ 12/03	1201L2	**506918**	CR	
1.9 D	*BBW/JZA, BAW/JZA, BEW/JZA, BDW/JYB JZA, BVW/JZA, BXW/JZA, BTW/JYB/JZA BZW/JYB/JZA*	D	1868	DW8B, DW8	M	Y		05/98 ▸	1201C4	**506575**	CR	
1.9 D,1.9 TD	*U6U/F/K/L/P/R/R/8/R/9/S/5 S/6/S/8/S/9/U/U/9*	D	1905	XUD9A, XUD9TF, XUD9BTF	M	Y		09/95 ▸ 01/97	1201A4	**506117**	CR	
1.9 D,1.9 TD	*BBDHXA, BEDHXA, BSDHXA BUDHXA, BWDHXA, BYDHXA BZDHXA, BAD/HXA, U6K/S/U U/R, U6U/F/H/K/L/P/R/8/R 9/S/5/S/6/S/8/S/9/U/U/9*	D	1905	XUD9BTF, XUD9A, XUD9TF	M	Y		01/97 ▸	1201A8	**506574**	CR	

• **New** Nouveau **Nuevo** Novo **Nuovo** Nieuw **Neu** Yeni Новый Nou

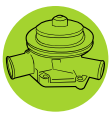

		Type Ctr.		cc						OE	Valeo		
CITROËN (.../...)													
Jumpy (95>2003) (.../...)													
2.0 HDi,2.0 HDi 16V	*BBRHZA, BCRHZB, BAR/HWB HXA/HZA/HZB, BDR/HXB/HZA HZB, BER/HXA/HZA/HZB BTRHWB, BURHZB, BWRHZB BSR/HXA/HXB/HZB, BYR/HXA HXB/HZB, BZR/HWB/HXA/HXB*	D	1997	DW10CTED, DW10BTED, DW10ATED DW10ATED4	M	Y		09/00 ▸ 12/03	1201C4	**506575**	CR	
Jumpy (2004>2006)													
2.0 i 16V	*BERFNC, BXRFNC, BZRFNC BBR/FNC*	E	1997	EW10J4	M	Y	20 teeth	01/04 ▸	1201J1	**506918**	CR	506720
2.0 i 16V	*BERFNC, BXRFNC, BZRFNC BBR/FNC*	E	1997	EW10J4	M	Y	20 teeth	01/04 ▸ 12/06	1201K1	**506918**	CR	
2.0 i 16V	*BBRFNC, BERFNC*	E	1997	EW10J4	M	Y	20 teeth	01/04 ▸	1201F4	**506918**	CR	
1.9 D	*BVWJYB, BXWJYB, BZWJYB, BTW/JYB*	D	1868	DW8B	M	Y		01/04 ▸	1201C4	**506575**	CR	
2.0 HDi,2.0 HDi 16V	*BBR/HXB/HZB, BER/HXB/HZB BURHZB, BSR/HXB/HZB, BWR HXB/HZB, BZRHWB, BYR/HWB HXB/HZB*	D	1997	DW10BTED, DW10BTED+L4 DW10ATED4	M	Y		01/04 ▸	1201C4	**506575**	CR	
Jumpy (2007>)													
2.0 i 16V	*XERFJC*	E	1997	EW10A	M	Y	20 teeth	03/07 ▸	1201J1	**506918**	CR	506720
1.6 HDi 16V	*XC9HUC, XS9HUC, XT9HUC XU9HUC, XV9HUC, XW9HUC XA9/HUC*	D	1560	DV6UTED4	M	Y		01/07 ▸	1201G9	**506715**	CR	
2.0 HDi 16V	*XAR/HKH/HRH, XCR/HKH/HRH XSRHKH, XDR/HKH/HRH XURHKH, XVRHKH, XWRHKH XTR/HKH/HRH*	D	1997	DW10UTED4, DW10BTED4	M	Y		01/07 ▸	1201E8	**506719**	CR	
Nemo													
1.4 i	*AAKFVC*	E	1360	TU3A	M	Y		12/07 ▸	1201G0	**506704**	CR	
1.3 HDi	*AJFHZ0, AAF/HZ/HZ*	D	1248	F13DTE5	M	Y		09/10 ▸	1201L9	●**506983**	V	
1.4 HDi	*AA8HSC*	D	1398	DV4TED	M	Y		12/07 ▸	1201G8	**506714**	CR	
Relay (94>2001)													
2.0 i	*231/A22/G22, 232/A22/B22/G22, 233 G22/L22*	E	1998	XU10J2U	M	Y		02/94 ▸	120191	**506117**	CR	
1.9 D,1.9 TD	*231/A62/A72, 232/A62/A72 E62/E82*	D	1905	XUD9A, XUD9UTF	M	Y		02/94 ▸ 02/97	1201A4	**506117**	CR	
1.9 D,1.9 TD	*231/A62/A72, 232/A62/A72 E62/E82*	D	1905	XUD9A, XUD9UTF	M	Y		02/97 ▸	1201A8	**506574**	CR	
2.5 D,2.5 TD	*231/B52/B92/G52, 232/B52 B92/G52/G92/J52/J92/K52 K92/L52/L92, 233/B52/B92 G52/G92/J52/J92/K52/K92 L92*	D	2446	DJ5, DJ5T	M	Y		02/94 ▸ 05/96	1201A3	**506582**	vvv	
Relay (2002>2006)													
2.0 HDi	*ZAA/MF, ZBA/MD/MF*	D	1997	DW10UTD	M	Y		01/02 ▸	1201C4	**506575**	CR	
2.2 HDi	*ZAR/MF, ZBR/MD/MF, ZCR/MD MH/MM*	D	2179	DW12TED	M	Y		01/02 ▸	1201E8	**506719**	CR	
2.8 HDi	*ZBP/MD/MF, ZCP/MD/MH/MM*	D	2798	F28TDCR	M	Y		01/02 ▸	1201C9	**506514**	N	
Relay (2006>)													
3.0 HDi 16V 3.0 HDi 180 16V	*YCDMF, YBD/MD/MF/MP*	D	2999	F30DT	M	Y		07/06 ▸	1201K0	●**506961**	V	
DACIA													
1210													
1.2		E	1237	RE11	M	Y		12/85 ▸	6000039201	**506041**	N	

• **New** Nouveau **Nuevo** Novo **Nuovo** Nieuw **Neu** Yeni Новый Nou

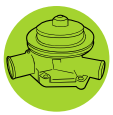

Valeo

Water pump
Pompe à eau
Bomba de água
Bomba de água
Pompa acqua
Waterpomp

Wasserpumpen
Pompa wodna
Vízpumpa
Su pompasi
ВОДЯНОЙ НАСОС

Vodní pumpa
Pompa de apă

			Type Ctr.		cc					2 3	OE	Valeo
DACIA (.../...)												
1310												
1.3		E		1289	810	M	Y		12/85 ▸	6000039201	**506041**	N
1320												
1.4		E		1397	RE14	M	Y		12/89 ▸	6000039201	**506041**	N
1410												
1.4	*1410*	E		1397	RE14	M	Y		12/85 ▸	6000039201	**506041**	N
Duster (84>99)												
1.4	*AR06B*	E		1397	RE14	M	Y		04/84 ▸ 01/99	6000039201	**506041**	N
Duster (2010>)												
1.5 dCi 85	*HSMW*	D		1461	K9K.7.96	M	Y		03/10 ▸	7701478031	**506863**	SS
1.5 dCi	*HSMC, HSM0, HSMV, HSMG*	D		1461	K9K.8.84,K9K.8.92,K9K.8.94 K9K.8.96,K9K.8.98	M	Y		03/10 ▸	7701478830	▲**506993**	SS
Lodgy												
1.5 dCi	*JSAL, JSMC*	D		1461	K9K.6.12,K9K.8.46	M	Y		04/12 ▸	7701478830	▲**506993**	SS
Logan												
1.2 16V	*LS1N*	E		1149	D4F.7.32	M	Y		02/09 ▸	210108845R	**506780**	SS
1.4 MPI	*LS0A, FS0B, KS0A, LS0G KS0C, FS0A, KS0E, LS0E LS0C, FS0E*	E		1390	K7J.7.10	M	N		09/04 ▸ 12/06	8200146298	**506573**	CR
1.4 MPI	*KS0C, LS0C, LS0A, LS0E KS0E, LS0G, FS0E, KS0A FS0A, FS0B*	E		1390	K7J.7.10	M	N		12/06 ▸	7701478018	**506573**	CR
1.6 MPI	*LS0B, KS0H, LS0H, KS0B LS0D, LS0F, FS0F, KS0D KS0F*	E		1598	K7M.7.10	M	N		09/04 ▸ 12/06	8200146298	**506573**	CR
1.6 i 16V	*LS0L, LS0P, KS0P, LS0M KS0M, LS0V*	E		1598	K4M.6.90, K4M.6.94	M	Y	20 teeth	12/06 ▸	8200582675	**506655**	CR
1.5 dCi	*LS0Y, KS0K, LS0J, LS00 LS0K, KS0J, FS0J, FS0K KS00, KS0W, LS0W*	D		1461	K9K.7.90, K9K.7.92, K9K.7.94 K9K.7.96	M	Y		09/05 ▸ 12/06	7701478031	**506863**	SS
1.5 dCi	*LS04, KS04, KS1L, FS1L*	D		1461	K9K.8.92	M	Y		10/08 ▸	7701478830	▲**506993**	SS
Logan (2013>)												
1.5 dCi	*L8AL, L8M4*	D		1461	K9K.6.12	M	Y		01/13 ▸	7701478830	▲**506993**	SS
Sandero (2008>)												
1.0 i HI-FLEX 16V	*BS0R*	F		999	D4D.7.60	M	Y		02/09 ▸	210108845R	**506780**	SS
1.2 i 16V	*BS01, BS1N*	E		1149	D4F.7.32	M	Y		02/09 ▸	210108845R	**506780**	SS
1.4 MPI 75 GPL	*BS0E*	F		1390	K7J.7.14	M	N		03/09 ▸	7701478018	**506573**	CR
1.4 MPI	*BS0A, BS0C, BS0G, BS0E BS1F*	E		1390	K7J.7.10	M	N		06/08 ▸	7701478018	**506573**	CR
1.6 MPI 90	*BS0D, BS1H*	F		1598	K7M.7.18,K7M.7.32	M	N		06/08 ▸	7701478018	**506573**	CR
1.6 MPI 90	*BS0F, BS1A, BS1H, BS0B BS0D, BS0T, BS0H, BS1E*	E		1598	K7M.7.10,K7M.7.14,K7M.7.32	M	N		06/08 ▸	7701478018	**506573**	CR
1.5 dCi,1.5 dCi 65	*BS0J, BS0K, BS0Y, BS0W BS00*	D		1461	K9K.7.90,K9K.7.92,K9K.7.96	M	Y		06/08 ▸	7701478031	**506863**	SS
1.5 dCi	*BS04, BS1L*	D		1461	K9K.8.92	M	Y		06/10 ▸	7701478830	▲**506993**	SS
Sandero (2012>												
1.5 dCi	*B8M4, B8AL*	D		1461	K9K.6.12	M	Y		10/12 ▸	7701478830	▲**506993**	SS
Solenza												
1.9 D	*B41G, B41E, B41F*	D		1870	F8Q.636	M	Y		04/03 ▸ 03/05	6001545345	**506019**	N
DACIA												
Dokker												
1.5 dCi	*KEM4, FEM4, FEAL, KEAL*	D		1461	K9K.6.12	M	Y		09/12 ▸	7701478830	▲**506993**	SS

• **New** Nouveau **Nuevo** Novo **Nuovo** Nieuw **Neu** Yeni Новый Nou

Valeo

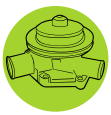

			Type Ctr.		cc						OE	Valeo		
DAEWOO													
Aranos													
1.8 i	*JF19B, JF19B1*	E	1796	C18LE	M	Y		02/95 ▸	90220568	**506005**	CR	
2.0 i	*JF19Y1*	E	1998	C20LE	M	Y		02/95 ▸ 04/98	90220568	**506005**	CR	
Espero													
1.8 i	*JF19B1*	E	1796	C18LE	M	Y		09/93 ▸ 05/99	90220568	**506005**	CR	
2.0 i	*JF19Y1*	E	1998	C20LE	M	Y		09/93 ▸ 05/99	90220568	**506005**	CR	
2.0 i	*JA19Y1*	E	1998	C20LE	A	Y		09/93 ▸ 05/99	90220568	**506005**	CR	
Evanda													
2.0 i GPL 16V	*KLAL*	F	1998	C20SED-GPL	M	Y		08/02 ▸ 05/05	92226211	**506856**	CR	
2.0 i GPL 16V	*KLAL*	F	1998	C20SED-GPL	A	Y		08/02 ▸ 05/05	92226211	**506856**	CR	
2.0 i 16V	*KLALF6*	E	1998	C20SED	M	Y		08/02 ▸ 05/05	92226211	**506856**	CR	
2.0 i 16V	*KLALA6*	E	1998	C20SED	A	Y		08/02 ▸ 05/05	92226211	**506856**	CR	
2.0 i 16V,2.0 i GPL 16V	*KLAL, KLALF6*	E	1998	C20SED	M	Y		08/02 ▸ 05/05	92065969	**506309**	CR	
2.0 i 16V	*KLALA6*	E	1998	C20SED	A	Y		08/02 ▸ 05/05	92065969	**506309**	CR	
Kalos													
1.4 i GPL 16V		G	1399	E-TECII-G	M	Y		01/03 ▸	96518977	**506659**	CR	
1.2 i	*KLASF4*	E	1150	T4	M	Y		01/03 ▸	96518977	**506659**	CR	
1.4 i	*KLASF6, KLASF4*	E	1399	E-TECII	M	Y		09/02 ▸	96352648	**506647**	CR	
1.4 i 16V	*KLASF4*	E	1399	E-TECII	M	Y		01/03 ▸	96352650	**506649**	CR	
1.4 i 16V		E	1399	E-TECII	A	Y		04/03 ▸	96518977	**506659**	CR	
1.4 i		E	1399	E-TECII	A	Y		05/03 ▸ 03/04	96352648	**506647**	CR	
Lacetti													
1.6 i GPL 16V		G	1598	A16DMS-G	M	Y		10/03 ▸	96352650	**506649**	CR	
1.4 i 16V	*KLANF1*	E	1399	E-TECII	M	Y		01/04 ▸	96352650	**506649**	CR	
1.4 i 16V	*KLANA1*	E	1399	E-TECII	A	Y		01/04 ▸	96352650	**506649**	CR	
1.6 i 16V	*KLANF1*	E	1598	A16DMS	M	Y		10/03 ▸	96352650	**506649**	CR	
1.6 i 16V	*KLANA1*	E	1598	A16DMS	A	Y		10/03 ▸	96352650	**506649**	CR	
Lanos													
1.3 i	*TF48CE, TF69CE, TF08CE*	E	1349	A13SMS	M	Y		09/97 ▸	96352648	**506647**	CR	
1.5 i	*TF08YE, TF69YE, TF48YE*	E	1498	A15SMS	M	Y		09/97 ▸	96352648	**506647**	CR	
1.5 i	*TA08YE, TA69YE, TA48YE*	E	1498	A15SMS	A	Y		09/97 ▸	96352648	**506647**	CR	
1.6 i 16V	*TF086E, TF696E, TF486E*	E	1598	A16DMS	M	Y		09/97 ▸	96352649	**506648**	CR	
1.6 i 16V	*TA086E, TA696E*	E	1598	A16DMS	A	Y		09/97 ▸	96352649	**506648**	CR	
Leganza													
2.0 i 16V	*AVF69Z*	E	1998	X20SED	M	Y		09/97 ▸ 10/97	92064250	**506309**	CR	
2.0 i 16V	*AVF69Z*	E	1998	X20SED	A	Y		09/97 ▸ 10/97	92064250	**506309**	CR	
2.0 i 16V	*AVF69Z*	E	1998	X20SED	M	Y		10/97 ▸ 01/03	92226211	**506856**	CR	
2.0 i 16V	*AVF69Z*	E	1998	X20SED	A	Y		10/97 ▸ 01/03	92226211	**506856**	CR	
2.2 i 16V	*AVF692*	E	2198	X22SED	M	Y		01/99 ▸ 01/03	92064250	**506309**	CR	
2.2 i 16V	*AVF692*	E	2198	X22SED	A	Y		01/99 ▸ 01/03	92064250	**506309**	CR	
2.2 i 16V	*AVF692*	E	2198	X22SED	M	Y		01/99 ▸ 01/03	92226211	**506856**	CR	
2.2 i 16V	*AVF692*	E	2198	X22SED	A	Y		01/99 ▸ 01/03	92226211	**506856**	CR	
Matiz (98>2000)													
0.8 i	*Y4A11*	E	796	F8CV	M	Y		03/98 ▸	17400A60D02000	**506659**	CR	
Matiz (2000>)													
0.8 i	*4M12BD*	E	796	F8CV	M	Y		10/00 ▸	96518977	**506659**	CR	
1.0 i		E	995	B10S	M	Y		10/02 ▸	96518977	**506659**	CR	
Nexia													
1.5	*TF08Y1, TF19Y1, TF68Y1*	E	1498	G15MF	M	Y		03/95 ▸	90325660A	**506007**	CR	
1.8		E	1796	C18LE	M	Y		09/95 ▸ 08/97	90284802	**506003**	CR	
Nubira (97>99)													
1.6 i 16V	*JF696E, JF486E, JF356E*	E	1598	A16DMS	M	Y		09/97 ▸ 05/99	96352650	**506649**	CR	
1.6 i 16V	*JA486E, JA696E, JA356E*	E	1598	A16DMS	A	Y		09/97 ▸ 05/99	96352650	**506649**	CR	
2.0 i 16V	*JF69ZE, JF35ZE, JF48ZE*	E	1998	DTEC20	M	Y		09/97 ▸ 05/99	92064250	**506309**	CR	

• **New** Nouveau **Nuevo** Novo **Nuovo** Nieuw **Neu** Yeni Новый Nou

		Type Ctr.	cc					2&3	OE	Valeo		
DAEWOO (.../...)												
Nubira (97>99) (.../...)												
2.0 i 16V	*JA69ZE, JA48ZE, JA35ZE*	E	1998	DTEC20	A	Y		09/97 ▸ 05/99	92064250	**506309**	CR	
2.0 i 16V	*JF35ZE, JF69ZE, JF48ZE*	E	1998	DTEC20	M	Y		12/97 ▸ 05/99	92226211	**506856**	CR	
2.0 i 16V	*JA69ZE, JA35ZE, JA48ZE*	E	1998	DTEC20	A	Y		12/97 ▸ 05/99	92226211	**506856**	CR	
Nubira (99>2003)												
1.6 i 16V	*JF486E, JF356E, JF696E*	E	1598	A16DMS	M	Y		06/99 ▸	96352650	**506649**	CR	
1.6 i 16V	*JA356E, JA486E, JA696E*	E	1598	A16DMS	A	Y		06/99 ▸	96352650	**506649**	CR	
2.0 i 16V	*JF692E, JF482E, JF352E*	E	1998	X20SED	M	Y		06/99 ▸	92064250	**506309**	CR	
2.0 i 16V	*JA482E, JA692E, JA352E*	E	1998	X20SED	A	Y		06/99 ▸	92064250	**506309**	CR	
2.0 i 16V	*JF352E, JF692E, JF482E*	E	1998	X20SED	M	Y		06/99 ▸ 09/04	92226211	**506856**	CR	
2.0 i 16V	*JA692E, JA482E, JA352E*	E	1998	X20SED	A	Y		06/99 ▸ 09/04	92226211	**506856**	CR	
Nubira (2003>)												
1.6 i GPL 16V		G	1598	A16DMS-G	M	Y		07/03 ▸	96352650	**506649**	CR	
1.6 i 16V	*KLAJF3, KLAJF6*	E	1598	A16DMS	M	Y		07/03 ▸	96352650	**506649**	CR	
Rezzo												
1.6 i GPL 16V		G	1598	A16DMS-G	M	Y		02/02 ▸	96352650	**506649**	CR	
1.6 i 16V		E	1598	A16DMS	M	Y		02/02 ▸	96352650	**506649**	CR	
1.8 i	*UF75HE*	E	1761	F18S2	M	Y		04/00 ▸ 02/02	96230587	**506953**	CR	
1.8 i	*UA75HE*	E	1761	F18S2	A	Y		05/00 ▸ 02/02	96230587	**506953**	CR	
2.0 i 16V	*UF75ZE*	E	1998	X20SED	M	Y		09/00 ▸	92064250	**506309**	CR	
2.0 i 16V	*UA75ZE*	E	1998	X20SED	A	Y		09/00 ▸	92064250	**506309**	CR	
Tacuma												
1.6 i 16V		E	1598	A16DMS	M	Y		02/02 ▸	96352650	**506649**	CR	
1.8 i	*UF75HE*	E	1761	F18S2	M	Y		06/00 ▸ 07/05	96230587	**506953**	CR	
1.8 i	*UA75HE*	E	1761	F18S2	A	Y		06/00 ▸ 07/05	96230587	**506953**	CR	
2.0 i 16V	*UF75ZE*	E	1998	X20SED	M	Y		06/00 ▸	92064250	**506309**	CR	
2.0 i 16V	*UA75ZE*	E	1998	X20SED	A	Y		06/00 ▸	92064250	**506309**	CR	
Tico												
0.8	*CA11*	E	796	H800	M	Y		08/95 ▸	96563958	**506659**	CR	
DAIHATSU												
Applause (A100) (89>97)												
1.6,1.6 i	*A111R, A101R, A101L A111L*	E	1589	HD-E, HD-C	M	Y		06/89 ▸ 09/97	1610087108000	**506391**	N	
1.6,1.6 i	*A101L, A101R*	E	1589	HD-C, HD-E	A	Y		06/89 ▸ 09/97	1610087108000	**506391**	N	
Applause (A101) (97>)												
1.6 i	*A101L*	E	1589	HD-E	M	Y		09/97 ▸	1610087108000	**506391**	N	
1.6 i	*A101L*	E	1589	HD-E	A	Y		09/97 ▸	1610087108000	**506391**	N	
Charade (G100) (87>93)												
1.3,1.3 i	*G102L, G102R, G112L G112R*	E	1295	HC-C, HC-E	M	Y		09/88 ▸ 01/93	1610087184000	**506391**	N	
1.3,1.3 i	*G102L, G102R*	E	1295	HC-E, HC-C	A	Y		09/88 ▸ 01/93	1610087184000	**506391**	N	
Charade (G200) (93>)												
1.3 i 16V	*G200L, G200R*	E	1295	HC-E	M	Y		03/93 ▸	1610087184000	**506391**	N	
1.3 i 16V	*G200R, G200L*	E	1295	HC-E	A	Y		03/93 ▸	1610087184000	**506391**	N	
1.3 i 16V	*G204L*	E	1296	HC-U	M	Y		09/97 ▸	1610087184000	**506391**	N	
1.5 i 16V	*G203L, G203R*	E	1499	HEE	M	Y		06/94 ▸	1610087184000	**506391**	N	
1.5 i 16V	*G203L, G203R*	E	1499	HEE	A	Y		06/94 ▸	1610087184000	**506391**	N	
1.6 i 16V	*G201R, G201L*	E	1589	HD-E	M	Y		03/93 ▸ 05/96	1610087184000	**506391**	N	
Charmant (A3/4/6) (81>87)												
1.3	*A35LE, A35RE*	E	1290	4K-U	M	Y		12/81 ▸ 07/87	1610019016000	**506410**	N	
1.6	*A45LE, A45RE*	E	1588	2T	M	Y		10/81 ▸ 08/83	1610028020000	**506412**	N	
1.6	*A45LE, A45RE*	E	1588	2T	A	Y		10/81 ▸ 08/83	1610028020000	**506412**	N	

• **New** Nouveau **Nuevo** Novo **Nuovo** Nieuw **Neu** Yeni Новый Nou

Valeo

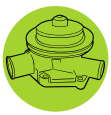

		Type Ctr.		cc					2 3	OE	Valeo		
DAIHATSU (.../...)													
Charmant (A3/4/6) (81>87) (.../...)													
1.6	*A60LE, A60RE*	E	1588	4A	M	Y		08/83 ▸ 07/87	1610019036000	**506423**	N	
1.6	*A60LE*	E	1588	4A	A	Y		08/83 ▸ 07/87	1610019036000	**506423**	N	
Copen												
1.3 i 16V	*L881L, L881R*	E	1298	K3-VE	M	Y		03/06 ▸	16100B9010	**506707**	N	
Cuore L276												
1.0 i 12V	*L276G*	E	998	1KR-FE	M	Y		04/07 ▸	1610080003	**506852**	SS	
1.0 i 12V	*L276G*	E	998	1KR-FE	A	Y		04/07 ▸	1610080003	**506852**	SS	
Feroza												
1.6,1.6 i	*F300L, F300R, F310L F310R*	E	1589	HD-E, HD-C	M	Y		10/88 ▸ 12/97	1610087185000	**506390**	N	
Gran Move												
1.5 i	*G303L, G303R*	E	1499	HEE	M	Y		08/96 ▸ 06/98	1610087184000	**506391**	N	
1.5 i	*G303L, G303R*	E	1499	HEE	A	Y		08/96 ▸ 06/98	1610087184000	**506391**	N	
1.6 i 16V	*G301R, G301L*	E	1589	HD-EP	M	Y		06/98 ▸	1610087108000	**506391**	N	
1.6 i 16V	*G301R*	E	1589	HD-EP	A	Y		06/98 ▸	1610087108000	**506391**	N	
Materia												
1.3 VVT 16V	*M401R, M401L, M411L*	E	1298	K3-VE	M	Y		09/06 ▸	16100B9010	**506707**	N	
1.3 VVT 16V	*M4, M411L*	E	1298	K3-VE	A	Y		09/06 ▸	16100B9010	**506707**	N	
1.5 VVT 16V	*M402L, M412L, M402R*	E	1495	3SZ-VE	M	Y		09/06 ▸	16100B9010	**506707**	N	
1.5 VVT 16V	*M402L, M402R*	E	1495	3SZ-VE	A	Y		09/06 ▸	16100B9010	**506707**	N	
Sportrak (F300)												
1.6,1.6 i	*F300R*	E	1589	HD-E, HD-C	M	Y		03/89 ▸ 12/97	1610087185000	**506390**	N	
Sirion (98>2005)												
1.3 i 16V	*M111L, M101L, M101R M111R*	E	1298	K3-VE	M	Y		05/00 ▸ 01/05	16100B9010	**506707**	N	
1.3 i 16V	*M111R, M111L, M101L M101R*	E	1298	K3-VE	A	Y		05/00 ▸ 01/05	16100B9010	**506707**	N	
Sirion (2005>)												
1.0 i 12V	*M300R, M300L*	E	998	1KR-FE	M	Y		02/05 ▸	1610097234000	**506852**	SS	
1.0 i 12V	*M300L, M300R*	E	998	1KR-FE	M	Y		02/05 ▸	1610080003	**506852**	SS	
1.3 i 16V	*M301L, M301R*	E	1298	K3-VE	M	Y		02/05 ▸	1610097234000	**506852**	SS	
1.3 i 16V	*M301R, M301L*	E	1298	K3-VE	A	Y		02/05 ▸	1610097234000	**506852**	SS	
1.3 i 16V	*M311L, M301L, M301R*	E	1298	K3-VE	M	Y		02/05 ▸	16100B9010	**506707**	N	
1.3 i 16V	*M301R, M301L, M311L*	E	1298	K3-VE	A	Y		02/05 ▸	16100B9010	**506707**	N	
1.5 i VVT 16V	*M303R, M303L*	E	1495	3SZ-VE	M	Y		06/07 ▸	16100B9010	**506707**	N	
1.5 i VVT 16V	*M303R, M303L*	E	1495	3SZ-VE	A	Y		06/07 ▸	16100B9010	**506707**	N	
Terios (97>2006)												
1.3 i	*J100L, J100R*	E	1296	HC-EJ	M	Y		03/97 ▸ 11/97	1610087185000	**506390**	N	
1.3 i	*J100L, J100R*	E	1296	HC-EJ	A	Y		03/97 ▸ 11/97	1610087185000	**506390**	N	
Terios (2006>)												
1.3 VVT 16V	*J211L*	E	1298	K3-VE	M	Y		05/06 ▸ 11/06	16100B9010	**506707**	N	
1.5 VVT 16V	*J210L, J200R, J200L J210R*	E	1495	3SZ-VE	M	Y		05/06 ▸	16100B9010	**506707**	N	
1.5 VVT 16V	*J210L, J200L, J210R*	E	1495	3SZ-VE	A	Y		05/06 ▸	16100B9010	**506707**	N	
Valera (G203)												
1.5 i	*G203L*	E	1499	HEE	M	Y		08/94 ▸	1610087184000	**506391**	N	
1.5 i	*G203L*	E	1499	HEE	A	Y		08/94 ▸	1610087184000	**506391**	N	
YRV												
1.3 i 16V	*M201L, M201R, M211R M211L*	E	1298	K3-VE	M	Y		08/00 ▸	16100B9010	**506707**	N	

• **New** Nouveau **Nuevo** Novo **Nuovo** Nieuw **Neu** Yeni Новый Nou

Type Ctr.	cc					OE	Valeo		
DAIHATSU (.../...)									
YRV (.../...)									
1.3 i 16V,1.3 i Turbo 16V *M201L, M201R, M211R M211L*	E	1298	K3-VE,K3-VT	A	Y		08/00 ▸	16100B9010	**506707**	N	
EBRO									
Patrol 160									
2.7 D	D	2710	MD27	M	Y		11/79 ▸ 01/85	999108	**506360**	N	
FIAT									
124									
1400	E	1438	124AC3000, 124AC.000 124B2000		Y		10/66 ▸ 1975	4186267	**506098**	N	
1600	E	1592	132AB.000		Y		09/72 ▸ 1975	5882689	**506098**	N	
1600	E	1608	125BC.000		Y		10/69 ▸ 1975	5882689	**506098**	N	
1800 *124/CC1/CC4*	E	1756	132C		Y		09/72 ▸ 1977	5882689	**506098**	N	
125									
1600	E	1608	125A.000, 125B.000	M	Y		08/67 ▸ 1973	4186267	**506098**	N	
127									
900 *127A45*	E	903	127GL.000	M	Y		03/80 ▸	5939200	**506079**	V	
900 *HACL, HN, 127/A1/A13/A1CL/A4/A44C A45M/AC3/ACL3/AIC/AIIC/AS3*	E	903	127GL.000, 100GL.000		Y		03/71 ▸	5939200	**506079**	V	
1050 *127A2*	E	1049	127A1.000	M	Y		06/78 ▸ 1981	5890406	**506063**	N	
1050 *147AA43, 127/A13/A1C3/A1CL/A5*	E	1049	127A.000		Y		03/71 ▸	5890406	**506063**	N	
1300 *127A7*	E	1301	127A3.000	M	Y		07/81 ▸	5890406	**506063**	N	
1300 D *127AD*	D	1301	127A5.000	M	Y		02/81 ▸ 06/83	5890406	**506063**	N	
128									
1100	E	1116	128A.000	M	Y		10/71 ▸ 1975	5894580	**506075**	V	506092
1100 *128/AC5I/ACL/AFCL/AFI/AI/AI2/AICL*	E	1116	128A.000		Y		03/69 ▸ 08/81	5894580	**506075**	V	506092
1300	E	1290	128A1.000	M	Y		10/71 ▸ 1975	5894580	**506075**	V	506092
1300 *128ACI*	E	1290	128A1.000, 128AR.000		Y		03/69 ▸ 07/80	5894580	**506075**	V	506092
131									
1300,1300 TC *131/A/A2/AC/AC2/AF/AF1 AFC/AFI/AI2/AS/AS2/AT*	E	1297	131A.000, 131B.000	M	Y		11/74 ▸ 02/81	4332090	**506352**	N	
1400,1400 TC *131/AIIC/AIT*	E	1367	131C1.000	M	Y		03/81 ▸	4332090	**506352**	N	
1600,1600 TC *131/A/A1/A12/A125/A15/A1C A1S/A1S2/A1S5/A1S6/A1T A1T6/AF1/AF15/AF16/AF1C AF1S/III05*	E	1585	131A1.000, 131B1.000	M	Y		11/74 ▸ 02/81	4332090	**506352**	N	
1600,1600 TC *131/A126/A16/A1T6/AZ6*	E	1585	131A1.000, 131B1.000	A	Y		11/74 ▸	4332090	**506352**	N	
2000 *131/A/AK*	E	1995	154C3.046, 131C4.000	M	Y		09/78 ▸	5882689	**506098**	N	
2000 D *131ATD9*	D	1995	8144-65	M	Y		1981 ▸ 12/83	7303050	**506248**	N	
2500 D *131/AFZ/AFZI/AFZS/AZ/AZIS AZL/AZS*	D	2445	8144-61	M	Y		09/77 ▸	7303050	**506248**	N	
132									
1600 *132AIII*	E	1585	132C.000	M	Y		04/77 ▸ 08/81	5882689	**506098**	N	
1600 *132AIII*	E	1585	132C.000	A	Y		04/77 ▸ 08/81	5882689	**506098**	N	
1600 *132AIII*	E	1585	132C.000		Y		04/77 ▸ 08/81	5882689	**506098**	N	
1600 *132/A/A5/AS/AS5*	E	1592	132A.000	M	Y		10/72 ▸ 01/74	4269431	**506492**	N	
1600 *132/AII/AII5/AIIS*	E	1592	132B.000	M	Y		02/74 ▸ 03/77	5882689	**506098**	N	
1600 *132/A6/AS6*	E	1592	132A.000	A	Y		10/72 ▸ 01/74	4269431	**506492**	N	
1600 *132/AII6/AIIS*	E	1592	132B.000	A	Y		02/74 ▸ 03/77	5882689	**506098**	N	
1800 *132/A1S/A1S5*	E	1756	132A1.000	M	Y		10/72 ▸ 01/74	4269431	**506492**	N	
1800 *132A1II*	E	1756	132B1.000	M	Y		02/74 ▸ 03/77	5882689	**506098**	N	
1800 *132A1S6*	E	1756	132A1.000	A	Y		10/72 ▸ 01/74	4269431	**506492**	N	
1800 *132A1II*	E	1756	132B1.000	A	Y		02/74 ▸ 03/77	5882689	**506098**	N	

• **New** Nouveau **Nuevo** Novo **Nuovo** Nieuw **Neu** Yeni Новый Nou

Valeo

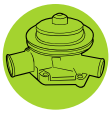

Type Ctr.		cc					OE	Valeo		
FIAT (.../...)										
132 (.../...)										
2000,2000 i *132A2S5*	E	1995	132DB.2A0, 132C2.000	M	Y		04/77 ▸ 08/81	5882689	**506098**	N
2000,2000 i *132A2S6*	E	1995	132DB.2A0, 132C2.000	A	Y		04/77 ▸ 08/81	5882689	**506098**	N
2500 D *132AD*	D	2445	8140-61	M	Y		09/78 ▸ 08/81	7303050	**506248**	N
500 Nuova (150)										
1.2	E	1242		M	N	23 teeth	10/07 ▸ 06/12	55184081	**506686**	CR
1.2 MPi *312AXA1*	E	1242	169A4.000	M	N		07/07 ▸ 06/12	55204538	**506967**	CR
1.4	E	1368		M	N	23 teeth	10/07 ▸ 06/12	55184081	**506686**	CR
1.4 MPi 16V *312AXC1*	E	1368	169A3.000	M	N		07/07 ▸ 06/12	55204538	**506967**	CR
1,3 D Multijet	D	1248		M	Y		10/07 ▸ 06/12	71745026	**506716**	vvv
500										
1.2 MPi-LPG *312AXA1*	F	1242	169A4.000	M	N		07/12 ▸	55221397	**506967**	CR
1.2 MPi *312AXA1*	E	1242	169A4.000	M	N		07/12 ▸	55221397	**506967**	CR
1.4 MPi 16V *312AXC1*	E	1368	169A3.000	M	N		07/12 ▸	55221397	**506967**	CR
500L										
1.4 MPI 16V *199LYB1*	E	1368	843A1.000	M	N		10/12 ▸	55221397	**506967**	CR
Albea										
1.2 i 16V *178CYE1*	E	1242	188A5.000	M	N	23 teeth	04/02 ▸	55184081	**506686**	CR
1.2 i *178CYA1*	E	1242	188A4.000	M	N		04/02 ▸	46526243	**506640**	CR
1.2 i 16V *178CYE1*	E	1242	188A5.000	A	N	23 teeth	04/02 ▸	55184081	**506686**	CR
1.2 i 16V *178CYE1*	E	1242	188A5.000	M	N		04/02 ▸	55221397	**506967**	CR
1.2 i 16V *178CYE1*	E	1242	188A5.000	A	N		04/02 ▸	55221397	**506967**	CR
1.6 i 16V *178CYC1*	E	1596	182B6.000	M	Y		04/02 ▸	46444355	●**506523**	V+vv
1.3 JTD 16V *178CY*	D	1248	188A9.000	M	Y		09/03 ▸	71745026	**506716**	vvv
Brava										
1.2 i 16V *182/BP1A/BT1A*	E	1242	182B2.000,188A5.000	M	N		10/98 ▸ 03/02	55221397	**506967**	CR
1.6 i 16V *182/B01A/BB1A/BH1A*	E	1581	182A4.000,182A4.027,182A6.000	M	Y		▸ 03/02	46444355	●**506523**	V+vv
1.6 i 16V *182/BB11/BB1A*	E	1581	182A4.000	A	Y		10/96 ▸ 03/02	46444355	●**506523**	V+vv
1.6 i 16V *182BU1A*	E	1596	182B6.000	M	Y		10/98 ▸ 03/02	46444355	●**506523**	V+vv
Bravo (95>98)										
1.6 i 16V *182/ABIA/AHIA*	E	1581	182A4.000,182A6.000	M	Y		06/95 ▸ 09/98	46400058	●**506523**	V+vv
1.6 i 16V *182AB11*	E	1581	182A4.000	A	Y		10/96 ▸ 09/98	46444355	●**506523**	V+vv
Bravo (98>2006)										
1.2 i 16V *182/AP1A/AT1A*	E	1242	182B2.000,188A5.000	M	N		04/99 ▸ 03/02	55221397	**506967**	CR
1.6 i 16V *182AB1A*	E	1581	182A4.000	M	Y		10/98 ▸ 03/02	46444355	●**506523**	V+vv
1.6 i 16V *182AB11*	E	1581	182A4.000	A	Y		10/98 ▸ 03/02	46444355	●**506523**	V+vv
Bravo (2007>2009)										
1.4 MPi 16V,1.4 Tjet 16V *198/AX/AXA1/AXF1*	E	1368	192B2.000,198A1.000,198A4.000	M	N		02/07 ▸ 12/09	55221397	**506967**	CR
Argenta										
1600 *132AIV*	E	1585	132D3.000	M	Y		04/81 ▸ 04/83	5882689	**506098**	N
1800	E	1756	132C1.000	M	Y		04/81 ▸ 05/83	5882689	**506098**	N
2000,2000 i *132/A3/A311*	E	1995	132C3.000, 132D1.000	M	Y		04/81 ▸ 04/83	5882689	**506098**	N
2000 *132A361*	E	1995	132D1.000	A	Y		04/81 ▸ 04/83	5882689	**506098**	N
Barchetta (95>2003)										
1.8 i 16V *183SB1A*	E	1747	188A6.000	M	Y		09/00 ▸	60816231	**506525**	SS
1.8 i 16V *183SA1A*	E	1747	183A1.000	M	Y		05/95 ▸ 09/00	60811328	**506518**	SS
Barchetta (2003>)										
1.8 i 16V *183SB1A*	E	1747	188A6.000	M	Y		07/03 ▸	60816231	**506525**	SS
Brava										
1.2 i 16V *182BP1A*	E	1242	182B2.000	M	N	23 teeth	10/98 ▸ 04/99	71713728	**506598**	CR
1.2 i 16V *182/BP1A/BT1A*	E	1242	182B2.000, 188A5.000	M	N	23 teeth	10/98 ▸	55184081	**506686**	CR
1.4 i 12V *182/BA1A/BG1A*	E	1372	182A3.000, 182A5.000	M	Y		06/95 ▸	46515971	**506597**	SS

• **New** Nouveau **Nuevo** Novo **Nuovo** Nieuw **Neu** Yeni Новый Nou

Type Ctr.	cc					OE	Valeo		
FIAT (.../...)									
Brava (.../...)									
1.8 i 16V *182BC1A*	E	1747	182A2.000	M	Y		06/95 ▸	60811328	**506518**	SS	
1.9 JTD,1.9 TD *182/B11A/BF/BF1A/BI1A BR1A*	D	1910	182A8.000, 182A7.000 182B4.000	M	Y		03/96 ▸	46515970	**506590**	SS	
1.9 D *182BE1B*	D	1929	160A7.000	M	Y		06/95 ▸ 09/98	46410551	**506563**	V+vv	
Bravo (95>98)									
1.4 i 12V *182/AA1A/AGIA*	E	1372	182A3.000, 182A5.000	M	Y		06/95 ▸ 09/98	46515971	**506597**	SS	
1.8 i 16V *182/AC1A/AC1B*	E	1747	182A2.000	M	Y		06/95 ▸ 09/98	60811328	**506518**	SS	
2.0 i 20V *182AD1A*	E	1998	182A1.000	M	Y		06/95 ▸ 09/98	7762926	**506516**	SS	
1.9 TD *182/AF1A/AI1A*	D	1910	182A8.000, 182A7.000	M	Y		03/96 ▸ 09/98	46515970	**506590**	SS	
1.9 D *182/AE1A/AE1B*	D	1929	160A7.000	M	Y		06/95 ▸ 09/98	46410551	**506563**	V+vv	
Bravo (98>2006)									
1.2 i 16V *182AP1A*	E	1242	182B2.000	M	N	23 teeth	10/98 ▸ 04/99	71713728	**506598**	CR	
1.2 i 16V *182/AP1A/AT1A*	E	1242	182B2.000, 188A5.000	M	N	23 teeth	04/99 ▸	55184081	**506686**	CR	
1.8 i 16V *182/AC1A/AC1B*	E	1747	182A2.000	M	Y		10/98 ▸	60811328	**506518**	SS	
2.0 i 20V *182AQ1A*	E	1998	182B7.000	M	Y		10/98 ▸	7762926	**506516**	SS	
1.9 JTD,1.9 TD *182/AF1A/AI1A/AR1A/AV1A*	D	1910	182B9.000, 182A7.000 182B4.000, 182A8.000	M	Y		10/98 ▸	46515970	**506590**	SS	
Bravo II (2007>2009)									
1.4 T-Jet	E	1368		M	N	23 teeth	09/07 ▸	55184081	**506686**	CR	
1.4 T-Jet 16V *198/AX/AXF1*	E	1368	198A1.000,198A4.000	M	N		07/07 ▸ 12/09	55204538	**506967**	CR	
1.9 JTD,1.9 TD	D	1910		M	Y		09/07 ▸	46515970	**506590**	SS	
Cinquecento									
900 i *170/AF53/BF53/CF53/CF5C*	E	899	1170A1.046, 1170A1.046F	M	Y		01/92 ▸ 02/98	7762986	**506645**	V	
900,900 i *170/AF53/AG53/BF53/CF53 CF5C*	E	899	1170A1.000, 1170A1.046 1170A1.046F	M	Y		01/92 ▸ 02/98	46742168	**506294**	V	
900,900 i *170/AB53/AC53*	E	903	170A1.046, 170A1.000	M	Y		01/92 ▸ 02/98	7762986	**506645**	V	
900,900 i *170/AB53/AC53*	E	903	170A1.046, 170A1.000	M	Y		01/92 ▸ 02/98	46742168	**506294**	V	
1.1 i *170AH53*	E	1108	176B2.000	M	N		10/94 ▸ 02/98	71713727	**506397**	CR	
coupé									
1.8 i 16V *175AXA1*	E	1747	183A1.000	M	Y		11/93 ▸	60811328	**506518**	SS	
2.0 i 16V,2.0 i Turbo 16V *FAC/A1AA/A1BD/B1AB*	E	1995	175A1.000,836A3.000,836A3.011	M	Y		11/93 ▸ 09/96	7747388	**506335**	N	
2.0 i 20V,2.0 i Turbo 20V *175/AXC1/AXD1/AXE1*	E	1998	175A3.000, 182B3.000 182A1.000	M	Y		07/96 ▸	7762926	**506516**	SS	
Croma									
1600 *154/AB55/AE55*	E	1585	154A.048	M	Y		10/85 ▸ 12/90	7540964	**506331**	N	
2.0 CHT,2.0 ie Turbo 2000 ie *15AG55A, 154/AC55/AD55 AG55/AM/AO55/AU55/DG55 LB55*	E	1995	154A1.000, 834B.000, 154C 154C5.000, 154A2.000 154A2.046	M	Y		10/85 ▸ 12/92	5973319	**506134**	N	
2.0 ie,2.0 ie Turbo *155PF55, 154/LC55/LD55 LE55/LF55/LM55/ME55/NC55 NE55/NF55*	E	1995	154C3.000, 834B.146 154C3.046, 154C4.000 154C4.046	M	Y		01/91 ▸ 08/96	7783009	**506859**	N	
2.0 ie 16V *154LN55*	E	1995	154E1.000	M	Y		11/92 ▸ 08/96	7747386	**506123**	N	
2.0 CHT,2000 ie *154/AD35/AO35/AO45/LB45*	E	1995	154C5.000, 834B.000	A	Y		10/85 ▸ 12/92	5973319	**506134**	N	
2.0 ie *154/LC45/LD45/LM45*	E	1995	154C3.046, 834B.146 154C3.000	A	Y		01/91 ▸ 08/96	7783009	**506859**	N	
2.0 TDiD *154/AP55/LG55/LR55*	D	1929	154C6.000, 154B, 154D1.000	M	Y		07/88 ▸	5896823	**506561**	V+vv	
2500 TD *154AF55*	D	2445	8144-91	M	Y		11/86 ▸ 06/88	98430541	**506295**	V	
2.5 TD,2500 D,2500 TD 0295054 ▸ *154/AE55/AR55/LH55/LI55 LL55*	D	2500	8144-97Y, 8144-97, 8144-97S 8144-67	M	Y		▸ 08/96	98430541	**506295**	V	
2.5 TD,2500 TD *154/AR55/LL55/PL55*	D	2500	8144-97, 8144-97Y7, 8144-97Y	M	Y		07/88 ▸ 08/96	99440930	**506297**	N	
2.5 TD *154LH45*	D	2500	8144-97	A	Y		01/91 ▸ 12/92	98430541	**506295**	V	
Croma II (2005>2007)									
2.2 i 16V *194AXA1*	E	2198	194A1.000	M	Y		06/05 ▸	71739401	**506839**	N	
2.2 i 16V *194AXA1*	E	2198	194A1.000	A	Y		06/05 ▸	71739401	**506839**	N	
1.9 JTD Multijet 16V *194AXC1*	D	1910	939A2.000	M	Y		06/05 ▸	46804051	**506808**	SS	
1.9 JTD *194/AXB1/BXB1*	D	1910	939A1.000	M	Y		06/05 ▸	46515970	**506590**	SS	

• **New** Nouveau **Nuevo** Novo **Nuovo** Nieuw **Neu** Yeni Новый Nou

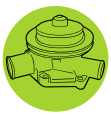

Type Ctr.	cc					2 3	OE	Valeo		
FIAT (.../...)										
Multipla (98>2003) (.../...)										
1.6 i 16V *186AGB1*	E	1596	182B6.000	M	Y		11/98 ▸ 06/04	46444355	●**506523**	V+vv	
1.9 JTD *186/AXB1/AXD1/AXE1*	D	1910	182B4.000, 186A6.000 186A8.000	M	Y		11/98 ▸	46515970	**506590**	SS	
Multipla (2004>)										
1.6 i Bipower 16V *186/AGB1/AXC1* 1.6 i Bipower GPL 16V	F	1596	182B6.000,182B6.000-G	M	Y		07/04 ▸ 05/10	46444355	●**506523**	V+vv	
1.6 i 16V *186AXC1*	E	1596	182B6.000	M	Y		07/04 ▸ 05/10	46444355	●**506523**	V+vv	
1.9 JTD *186/AXE1/AXG1*	D	1910	186A8.000, 186A9.000	M	Y		07/04 ▸	46515970	**506590**	SS	
Palio										
1.1 *178BXM1*	E	1108	178B9.033	M	N		09/98 ▸ 02/01	46526243	**506640**	CR	
1.1 *178BXM1*	E	1108	178B9.033	M	N		09/98 ▸	71713727	**506397**	CR	
1.2 i *178/BXS1/BXU1/BYA1/DXG1/DYA/DYA1*	E	1242	178B7.045, 188A4.000 178B5.000, 178C4.066	M	N		03/01 ▸	55184080	**506640**	CR	
1.2 i,1.2 i 16V *178/BXS1/BYE1/DYE/DYE1*	E	1242	188A5.000, 178C4.066 178D7055	M	N	23 teeth	03/01 ▸	55184081	**506686**	CR	
1.2 i *178/BXU1/DXG1/DYA1*	E	1242	178B7.045, 188A4.000 178B5.000	M	N		09/97 ▸	71713727	**506397**	CR	
1.4 i *178/BXC1/BXP1*	E	1372	178B2.000, 178B2.016	M	Y		06/99 ▸ 02/01	46437911	**506524**	vvv	506613
1.6 i *178/AXV1/DXV1*	E	1580	178D2.011	M	Y		06/99 ▸ 02/01	46444355	●**506523**	V+vv	
1.6 i,1.6 i 16V *178/BXD1/DXD1/DXQ1*	E	1581	178B3.000,178C7.098	M	Y		09/97 ▸ 02/01	46444355	●**506523**	V+vv	
1.6 i 16V *178DYC1*	E	1596	182B6.000	M	Y		09/97 ▸ 09/02	46444355	●**506523**	V+vv	
1.7 D,1.7 TD *178/BXN1/DXB1/DXH1*	D	1697	176A3.000, 176B3.000 176B7.000	M	Y		09/97 ▸	46757574	**506712**	N	
1.7 D,1.7 TD *178/BXN1/DXB1/DXH1*	D	1697	176B3.000, 176A3.000 176B7.000	M	Y		09/97 ▸ 02/01	46445405	**506298**	N	
1.9 D,1.9 JTD *178/DYD1/DYF/DYF1*	D	1910	223A6.000, 188A2.000	M	Y		09/97 ▸	46515970	**506590**	SS	
Panda										
750 *11A/14AC/A4AC/A4CT, 141/AA43/AA4C AA53/AI43/AI53*	E	769	141B.000, 156A4.000	M	Y		03/86 ▸	7617364	**506268**	V	
750 *11A/14AC/A4AC/A4CT, 141/AA43/AA4C AA53/AM43/AM53*	E	769	156A4.000, 156A4.048	M	N		03/86 ▸	71713727	**506397**	CR	
0.8 *141/A2N/A2NC*	E	843	100GL6.000	M	Y		01/82 ▸ 1986	5939200	**506079**	V	
900 ie *141AT53*	E	899	1170A1.046	M	Y		10/89 ▸	7617364	**506268**	V	
900 ie *141/AT53/GT53/GT5F*	E	899	1170A1.046, 1170A1.046F	M	Y		04/92 ▸	46742168	**506294**	V	
0.9 *141/A1I/A3/A35/A35C/A3I/A3I5/A3IC*	E	903	100GL3.000	M	Y		07/80 ▸ 02/86	5939200	**506079**	V	
900 *141/AL43/AL53*	E	903	146A.048	M	Y		06/89 ▸	7617364	**506268**	V	
1.0 *141/A4/A4C*	E	965	A112B1.054	M	Y		06/83 ▸ 1986	5939200	**506079**	V	
1000,1000 ie *11A/B5AC/B5CT/B8AC/B8CT E5B8, 151AE53, 141/AB43 AB53/AB83/AE53/AE5B/AF43 AF53/AJ53/AO43/AO53*	E	999	156A2.000, 156A2.100 141C2.000, 156A2.246 156A3.000	M	N		03/86 ▸	71713727	**506397**	CR	
1000 *141AB13*	E	999	156A2.000	A	N		1990 ▸	71713727	**506397**	CR	
1100 ie *141AW53*	E	1108	187A1.000	M	N		12/00 ▸	46526243	**506640**	CR	
1100 ie *141/AK53/AS53/MK53*	E	1108	156C.046, 176B2.000	M	N		06/89 ▸	71713727	**506397**	CR	
1100 ie *141/AK13/AS13*	E	1108	176B2.000, 156C.046	A	N		10/90 ▸	71713727	**506397**	CR	
1300 D *141/AD43/AD53/AD5C*	D	1301	156A5.000	M	Y		04/86 ▸	5890406	**506063**	N	
Panda (2003>)										
1.1 i *169/AXA1/CXA1*	E	1108	187A1.000	M	N		09/03 ▸	55184080	**506640**	CR	
1.1 i,1.1 i Eco *169AXA1*	E	1108	187A1.000	M	N		01/05 ▸ 09/09	55221397	**506967**	CR	
1.2 i *169/AXB1/AXB2/AXBI/AXF2/AXFI/CXB1 CXB2/CXF1/CXF2*	E	1242	169A4.000,188A4.000	M	N			55221397	**506967**	CR	
1.2 i GNV,1.2 i LPG *169/AXB1/CXB1*	F	1242	169A4.000,188A4.000	M	N		06/07 ▸	55221397	**506967**	CR	
1.2 i *169/AXB1/AXB2/CXB1*	E	1242	188A4.000	M	N		09/03 ▸	55184080	**506640**	CR	
1.4 i GNV 16V *169/AXH1/CXH1*	F	1368	350A1.000 GNV	M	N		07/10 ▸	55221397	**506967**	CR	
1.4 i 16V *169AXE1*	E	1368	169A3.000	M	N		09/06 ▸ 06/10	55221397	**506967**	CR	
1.3 JTD Multijet 16V *169/AX/AXC1/AXC2/CXC1*	D	1248	188A9.000	M	Y		09/03 ▸	71745026	**506716**	vvv	
1.3 MJTD 16V *169CXG2*	D	1248	169A5.000	M	N		07/10 ▸	55221397	**506967**	CR	
Punto (93>99)										
55 ED,55 EL 6 speed,55 S *176/AQ/AO53/AQ55/AQ63* 55 SX,55 SX 6 speed	E	1108	176B2.000	M	N		10/94 ▸ 09/99	46526243	**506640**	CR	

• **New** Nouveau **Nuevo** Novo **Nuovo** Nieuw **Neu** Yeni Новый Nou

Valeo

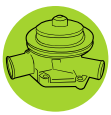

FIAT (.../...)

Punto (93>99) (.../...)

55 ED,55 EL,55 EL 6 speed 55 S,55 SX,55 SX 6 speed	176/AA53/AA55/AA5C/AA63 AQ/AQ53/AQ55/AQ63	E	1108	176B2.000, 176A6.000	M	N		07/93 ▸	71713727	**506397**	CR	
55 S	176AH53	E	1108	176A6.000	M	Y		07/93 ▸ 07/94	46437912	**506379**	vvv	506334
60 Opera,60 S,60 SX 60 Star,75 ELX,75 HSD 75 SX,85 ELX,85 Sporting	176/AC53/AC55/AR53/AR55 AR5F/AV52/AV53/BR52/BV53	E	1242	176B9.000, 176A8.000 176B4.000	M	N		07/99 ▸ 09/99	46526243	**506640**	CR	
85 ELX,85 Sporting	176/AV52/AV53/AV55/BV53	E	1242	176B9.000	M	N		04/99 ▸ 09/99	55221397	**506967**	CR	
60 Opera,60 S,60 SX 60 Star,75 ELX,75 HSD 75 SX,85 ELX,85 Sporting	176/AB52/AC53/AC55/AR53 AR55/AR5F/AV52/AV53/AV55 BB52/BB53/BB55/BB5F/BR52 BV53	E	1242	176A7.000, 176B4.000 176A8.000, 176B9.000	M	N		07/93 ▸	71713727	**506397**	CR	
60 ELX,60 SX	176/AR12/AR13/AR15	E	1242	176B4.000	A	N		07/99 ▸ 09/99	46526243	**506640**	CR	
60 ELX,60 SX	176/AP13/AP15/AR12/AR13 AR15	E	1242	176B4.000, 176B1.000	A	N		05/94 ▸	71713727	**506397**	CR	
GT	176/AD53/AS53	E	1372	176B6.000, 176A4.000	M	Y		07/93 ▸ 09/99	46437912	**506379**	vvv	506334
90 ELX,ELX	176/AL52/BL52/BL53/BL55	E	1581	176A9.000	M	Y		11/93 ▸ 04/97	46437912	**506379**	vvv	506334
60 Diva,60 S,60 SX,70 ELX 70 SX,ELX,S,SX	176/AF/AF53/AF55/AF5C AF5F/AG53/AI53/AI55/AT AT53/AT55/CG/CG53/CG55	D	1697	176A5.000, 176B7.000 176A3.000F, 176B3.000 176A3.000	M	Y		07/93 ▸ 09/99	7781232	**506298**	N	

Punto II (99>2003)

1.2 i	188/AX/AXA1/BXA1	E	1242	188A4.000	M	N		07/99 ▸	55184080	**506640**	CR	
1.2 i 16V	188/AX/AXB1/BX/BXB1	E	1242	188A5.000	M	N	23 teeth	07/99 ▸	55184081	**506686**	CR	
1.2 i 16V	188/AX/AXB1/BXB1	E	1242	188A5.000	A	N	23 teeth	07/99 ▸	55184081	**506686**	CR	
1.2 i 16V	188/AX/AXB1/BX/BXB1	E	1242	188A5.000	M	N		07/99 ▸ 06/03	55221397	**506967**	CR	
1.2 i 16V	188/AX/AXB1/BXB1	E	1242	188A5.000	A	N		07/99 ▸ 06/03	55221397	**506967**	CR	
1.8 i 16V	188AX	E	1747	183A1.000	M	Y		07/99 ▸	60811328	**506518**	SS	
1.8 i 16V	188/AXF1/BXF1	E	1747	188A6.000	M	Y		07/99 ▸ 06/03	60608898	**506525**	SS	
1.9 D,1.9 JTD	188/AX/AXD1/AXE1/AXG1/BX BXD1/BXE1	D	1910	188A3.000, 188A2.000 188A7.000	M	Y		07/99 ▸	46515970	**506590**	SS	

Punto II (2003>)

1.2 i,1.2 i Bipower	188/AXA1/BXA1	E	1242	188A4.000	M	N		07/03 ▸	55184080	**506640**	CR	
1.2 i,1.2 i 16V 1.2 i Bipower	188/AXA1/AXB1/BXA1/BXB1	E	1242	188A4.000, 188A5.000	M	N	23 teeth	07/03 ▸	55184081	**506686**	CR	
1.4 i 16V	188/AXM1/BXM1	E	1368	843A1.000	M	N	23 teeth	07/03 ▸	55184081	**506686**	CR	
1.8 i 16V	188AXF1	E	1747	188A6.000	M	Y		07/03 ▸	60816231	**506525**	SS	
1.3 JTD 16V	188/AXH1/BXH1/CXH1	D	1248	188A9.000	M	Y		07/03 ▸	71745026	**506716**	vvv	
1.9 JTD	188/AXG1/AXL1/BXG1/BXL1	D	1910	188A7.000, 188B2.000	M	Y		07/03 ▸	46515970	**506590**	SS	

Nuova Punto (2011>)

1.4 i GNV,1.4 i GPL	199/AXB1/BXB1	F	1368	350A1.000 GNV,350A1.000 GPL	M	N		10/11 ▸	55221397	**506967**	CR	
1.4 TB 135 16V 1.4 i 105 16V,1.4 i 77	199/AXB1/AXV1/AXW1/BXB1 BXV1/BXW1	E	1368	350A1.000,955A2.000,955A6.000	M	N		10/11 ▸	55221397	**506967**	CR	

Qubo

1.4 i-GNV 77	225AXCI	F	1368	350A1.000 GNV	M	N		10/09 ▸	55221397	**506967**	CR	

Regata

70ES	138AB54	G	1301	138B2.000-G	M	Y		1985 ▸ 11/85	7671810	**506508**	N	
70S	138A934	E	1299	149C4.028	A	Y		07/86 ▸	7671810	**506508**	N	
70S	138A934	E	1299	149C4.028	A	Y		07/86 ▸	5894580	**506075**	V	506092
70,70ES,70S	138/AA44/AA54/AA55/AB54 AI54/AX44/AX54/AX55	E	1301	149A7.000, 138B2.000	M	Y		09/83 ▸	7671810	**506508**	N	
70,70S	138/AA44/AA54/AA55/AX44 AX54/AX55	E	1301	149A7.000, 138B2.000	M	Y		09/83 ▸	7784974	**506075**	V	506092
85S	138AC54	E	1498	138B3.000	M	Y		09/83 ▸ 06/86	7671810	**506508**	N	
85S	138AC54	E	1498	138B3.000	M	Y		09/83 ▸ 06/86	7784974	**506075**	V	506092
85,85S	138/AC34/AC64/AU34	E	1498	138B3.000, 149A5.000	A	Y		09/83 ▸	7671810	**506508**	N	
85,85S	138/AC34/AC64/AU34	E	1498	149A5.000, 138B3.000	A	Y		09/83 ▸	7784974	**506075**	V	506092
85S	138/AD54/AD55/AR54	E	1585	149A.000	M	Y		09/83 ▸ 06/86	7671810	**506508**	N	
85S	138/AD54/AD55/AR54	E	1585	149A.000	M	Y		09/83 ▸ 06/86	7784974	**506075**	V	506092

• **New** Nouveau **Nuevo** Novo **Nuovo** Nieuw **Neu** Yeni Новый Nou

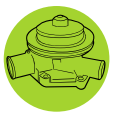

Valeo

Water pump
Pompe à eau
Bomba de água
Bomba de água
Pompa acqua
Waterpomp

Wasserpumpen
Pompa wodna
Vízpumpa
Su pompasi
ВОДЯНОЙ НАСОС

Vodní pumpa
Pompa de apă

			cc					OE	Valeo			
FIAT (.../...)												
Regata (.../...)												
100 Sie,100S,100Sie,85S *138/A754/A755/AE54/AR55*	E	1585	149C3.000, 149A4.000 149A.000	M	Y		09/84 ▸	7574887	**506167**	N	
- *138/AF54/AF55*	D	1714	136B6.000	M	Y		09/84 ▸ 06/86	5882838	**506327**	V	
Super *138/AG54/AG55*	D	1929	149A1.000	M	Y		09/83 ▸ 06/86	46409134	**506144**	N	
Ritmo (78>82)												
60 L *138AC*	E	1049	127A6.000	M	Y		02/80 ▸ 10/82	5890406	**506063**	N	
60 CL,60 L *138/A/A3/A35/A5/AC/AC3 AC35/AC5*	E	1116	138A.000	M	Y		05/78 ▸ 10/82	5894580	**506075**	V	506092
65 CL,65 L *138/A1/A13/A135/A15/A1C A1C3/A1C5*	E	1301	138A1.000	M	Y		05/78 ▸ 10/82	5894580	**506075**	V	506092
65 CL,65 L *138/A1/A13/A135/A15/A1C A1C3/A1C5*	E	1301	138A1.000	M	Y		05/78 ▸ 10/82	7671810	**506508**	N	
75 CL,75 L *138/A2/A23/A2C/A2C3*	E	1498	138A2.000	M	Y		05/78 ▸ 10/82	5894580	**506075**	V	506092
75 CL,75 L *138/A2/A23/A2C/A2C3*	E	1498	138A2.000	M	Y		05/78 ▸ 10/82	7671810	**506508**	N	
75 CL,75 L *138/A236/A26/A2C3/A2C6*	E	1498	138A2.000	A	Y		05/78 ▸ 10/82	7671810	**506508**	N	
75 CL,75 L *138/A236/A26/A2C3/A2C6*	E	1498	138A2.000	A	Y		05/78 ▸ 10/82	5894580	**506075**	V	506092
105 TC *138A2SP*	E	1585	138AR.000	M	Y		03/82 ▸ 10/82	4466193	**506383**	N	
125 TC	E	1995	FIAT03	M	Y		03/82 ▸ 10/82	4466193	**506383**	N	
CL,Confort,L *138/AD0/AD35/AD5/ADC3 ADC5*	D	1714	138A5.000	M	Y		02/80 ▸ 10/82	5984047	**506860**	V	
Ritmo (83>88)												
60 CL,60 L *138/A434/A44/A4F3/A4F4 A4II*	E	1116	138B.000, 146A4.000	M	Y		11/82 ▸ 1988	7784974	**506075**	V	506092
60 CL *138/A4F3/A4F4/A4II*	E	1116	146A4.000	M	Y		04/85 ▸ 1988	7671810	**506508**	N	
70 CL *138/A52/A532*	E	1299	138B3.028	A	Y		04/85 ▸ 1988	5894580	**506075**	V	506092
70 CL *138/A52/A532*	E	1299	138B3.028	A	Y		04/85 ▸ 1988	7671810	**506508**	N	
70,70 CL *138/A5/A53/A56C/A5II*	E	1301	138B2.000, 149A7.003	M	Y		11/82 ▸ 1988	5894580	**506075**	V	506092
70 CL *138A5II*	E	1301	149A7.003	M	Y		04/85 ▸ 1988	7671810	**506508**	N	
70 CL *138A56*	E	1301	138B2.000	A	Y		11/82 ▸ 03/85	5894580	**506075**	V	506092
75,75 CLie,75 Sie,85,85 S *138/A/A6I/A6I3/A7/A73/A7I A7I3*	E	1498	138B3.000, 138C2.048 149A5.000	M	Y		11/82 ▸ 1988	7671810	**506508**	N	
75,75 CLie,75 Sie,85,85 S *138/A/A6I/A6I3/A7/A73/A7I A7I3*	E	1498	138C2.048, 149A5.000 138B3.000	M	Y		11/82 ▸ 1988	5894580	**506075**	V	506092
75,85,85 S *138/A62/A632/A72/A732/A76*	E	1498	138B3.000	A	Y		11/82 ▸ 1988	5894580	**506075**	V	506092
75,85,85 S *138/A62/A632/A72/A732/A76*	E	1498	138B3.000	A	Y		11/82 ▸ 1988	7671810	**506508**	N	
105 TC *138A8*	E	1585	138AR.000	M	Y		11/82 ▸ 03/85	4466193	**506383**	N	
100 S *138A8II*	E	1585	149A4.048	M	Y		04/85 ▸ 1988	7574887	**506167**	N	
130 TC *138A9A*	E	1995	FIAT04	M	Y		11/82 ▸ 1988	4466193	**506383**	N	
- *138/A5D/A5D3*	D	1697	149B3.000	M	Y		11/82 ▸ 03/85	5882838	**506327**	V	
- *138/A4D/A4D3*	D	1714	138B6.000	M	Y		02/83 ▸ 03/85	5882838	**506327**	V	
Sedici												
1.9 JTD Multijet *189215*	D	1910	D19AA	M	Y		04/06 ▸	46515970	**506590**	SS	
Seicento (98>)												
0.9 i *187/AXA/AXA1*	E	899	1170A1.046F, 1170A1.046	M	Y		03/98 ▸	46742168	**506294**	V	
0.9 i *187AXA1*	E	899	1170A1.046F	A	Y		03/98 ▸	46742168	**506294**	V	
1.1 i *187/AXB1/AXC1/CXB/CXC1*	E	1108	187A1.000, 176B2.000	M	N		03/98 ▸	46526243	**506640**	CR	
1.1 i *187/AXB1/AXC1/CXB/CXC1*	E	1108	176B2.000, 187A1.000	M	N		03/98 ▸	71713727	**506397**	CR	
Seicento (2005>)												
1.1 i *187/AXC1/CXC1*	E	1108	187A1.000	M	N		01/05 ▸ 08/05	55221397	**506967**	CR	
Siena (97>2001)												
1.2 i *178/CXS1/CXU1* 9042883 ▸	E	1242	178B7.045, 178C4.066	M	N		06/99 ▸	46526243	**506640**	CR	
1.2 i *178/CXG1/CXS1/CXU1* ▸ 9042883	E	1242	178B5.000, 178C4.066 178B7.045	M	N		09/98 ▸	71713727	**506397**	CR	
1.4 i *178/CXC/CXP*	E	1372	178B2.000, 178B2.016	M	Y		11/97 ▸	46437911	**506524**	vvv	506613
1.4 i *178/CXC/CXP*	E	1372	178B2.000, 178B2.016	M	Y		11/97 ▸	46437912	**506379**	vvv	506334
1.6 i *178CXV1*	E	1580	178D2.011	M	Y		06/99 ▸ 12/01	46444355	●**506523**	V+vv	

• **New** Nouveau **Nuevo** Novo **Nuovo** Nieuw **Neu** Yeni Новый Nou

Valeo

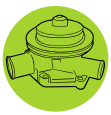

		Type Ctr.		cc						OE	Valeo		
FIAT (.../...)													
Siena (97>2001) (.../...)													
1.6 i 16V	*178/CXD/CXQ*	E	1581	178B3.000,178C7.098	M	Y		11/97 ▸ 12/01	46444355	●**506523**	V+vv	
1.7 D,1.7 TD	*178/CXN/CXT1/CYB1*	D	1697	176B3.000, 178C9.066 176B7.000	M	Y		09/98 ▸	46757574	**506712**	N	
1.7 D,1.7 TD	*178/CXN/CXT1/CYB1*	D	1697	176B7.000, 176B3.000 178C9.066	M	Y		09/98 ▸	46445405	**506298**	N	
1.2 i	*178*		-		M	N		1997 ▸	71713727	**506397**	CR	
Siena (2002>)													
1.2 i 16V	*178CYE1*	E	1242	188A5.000, 178D7055	M	N	23 teeth	01/02 ▸	55184081	**506686**	CR	
1.2 i		E	1242	178C4.066, 188A4.000	M	N		01/02 ▸	55184080	**506640**	CR	
1.6 i 16V		E	1596	182B6.000	M	Y		01/02 ▸ 12/11	46444355	●**506523**	V+vv	
1.2 i,1.2 i 16V		E	1242	178C4.066,178D7055,188A5.000	M	N		01/02 ▸ 12/11	55221397	**506967**	CR	
1.9 DS		D	1910	223A6.000	M	Y		01/02 ▸	46515970	**506590**	SS	
Stilo (2001>2004)													
1.2 i 16V	*192/AXA1/BXA1*	E	1242	188A5.000	M	N	23 teeth	07/02 ▸	55184081	**506686**	CR	
1.6 i 16V	*192/AXB1/BXB1/CXB1*	E	1596	182B6.000	M	Y		09/01 ▸ 12/03	46444355	●**506523**	V+vv	
1.8 i 16V	*192/AXC1/BXC1/CXC1*	E	1747	192A4.000	M	Y		09/01 ▸	60816231	**506525**	SS	
2.4 i 20V	*192/AXD1/BXD1*	E	2446	192A2.000	M	Y		09/01 ▸	7762926	**506516**	SS	
1.9 JTD	*192/AXE1/AXF1/BXE1/BXF1* *CXE1/CXF1/DXE1/DXF1*	D	1910	192A3.000, 192A1.000	M	Y		09/01 ▸	46515970	**506590**	SS	
1.9 JTD	*192/CXE1/DXE1*	D	1910	192A1.000	M	Y		01/03 ▸ 12/03	46444355	●**506523**	V+vv	
Stilo (2004>)													
1.4 16V,1.4 i 16V	*192/AXH1/AXN1/BXH1/BXN1* *CXH1/CXN1/DXH1*	E	1368	843A1.000, 192B2.000	M	N	23 teeth	01/04 ▸	55184081	**506686**	CR	
1.4 i 16V	*192/AXH1/AXN1/BXH1/BXN1* *CXH1/CXN1/DXH1*	E	1368	192B2.000,843A1.000	M	N		01/04 ▸	55204538	**506967**	CR	
1.6 i 16V	*192/BXR1/CXR1*	E	1596	192B3.000	M	Y		01/04 ▸	71739779	**506837**	N	
1.6 i 16V	*192/74X/7JX/AXB1/AXR1* *BXB1/BXR1/CXB1/CXR1/DXB1*	E	1596	178E7.000,182B6.000,192B3.000	M	Y		01/04 ▸	46444355	●**506523**	V+vv	
1.8 16V,1.8 i 16V	*192/AXC1/BXC1/CXE1*	E	1747	192A4.000	M	Y		01/04 ▸	60816231	**506525**	SS	
2.4 i 20V	*192/AXD1/BXD1/CXD1*	E	2446	192A2.000	M	Y		01/04 ▸	7762926	**506516**	SS	
1.9 JTD 16V 1.9 JTD Multijet 16V	*192/AXG1/AXM1/AXT1/BXG1* *BXM1/CXG1/CXM1/CXT1/DXG1*	D	1910	192B1.000, 192A5.000 937A5.000	M	Y		01/04 ▸	46804051	**506808**	SS	
1.9 JTD,1.9 JTD 16V 1.9 JTD Multijet 1.9 JTD Multijet 16V	*192/3/54/5J8/AXE1/AXF1* *AXL1/AXP1/AXS1/BXE1/BXF1* *BXL1/BXP1/CXE1/CXF1/CXL1* *CXP1/CXS1/DXE1/DXF1/DXG1*	D	1910	192A1.000, 192A3.000 192A5.000, 192A9.000 937A4.000, 192A8.000	M	Y		01/04 ▸	46515970	**506590**	SS	
Strada													
1.2 i, Trekking	*178EXG*	E	1242	178B5.000	M	N		03/03 ▸ 05/06	55221397	**506967**	CR	
85 Super		E	1498	149A5.000	M	Y		04/85 ▸ 1988	5894580	**506075**	V	506092
85 Super		E	1498	149A5.000	M	Y		04/85 ▸ 1988	7671810	**506508**	N	
Tempra													
1.4 ie	*159AX54*	E	1372	836A4.000	M	Y		01/95 ▸	46437916	**506379**	vvv	506334
1.4,1.4 ie	*159/AA54/AA55/AC54/AC55* *AX54*	E	1372	160A1.046, 159A2.000 836A4.000	M	Y		11/89 ▸	7784988	**506299**	V+vv	
1.4 ie	*159AX54*	E	1372	836A4.000	M	Y			46437911	**506524**	vvv	506613
1.4	*159/AA54/AA55*	E	1372	159A2.000	M	Y		11/89 ▸ 02/93	7784975	**506119**	V	506386
1.6,1.6 ie	*159/AD54/AD55/AE54/AE55* *AJ54/AJ55/AT55/AT5C*	E	1581	835C1.000, 159A3.000 159B9.000	M	Y		07/94 ▸	46437916	**506379**	vvv	506334
1.6,1.6 ie	*159/AD54/AD55/AE54/AE55* *AS54/AS55/AT54/AT55/AT5C* *BD54*	E	1581	835C1.000, 159A3.000 159A3.048, 159A3.046	M	Y		11/89 ▸	7784988	**506299**	V+vv	
1.6	*159/AD54/AD55/BD54*	E	1581	159A3.000	M	Y		11/89 ▸ 02/93	7784975	**506119**	V	506386
1.6,1.6 ie	*159/AD14/AE14/AE15/AS14* *AS15*	E	1581	159A3.048, 159A3.000 159A3.046	A	Y		11/89 ▸	7784987	**506519**	V+CR	
1.6	*159AD14*	E	1581	159A3.000	A	Y		04/90 ▸ 02/93	7784975	**506119**	V	506386
1.6 ie	*159/AE14/AE15/AS14/AS15*	E	1581	159A3.046, 159A3.048	A	Y		11/89 ▸ 02/93	7784977	**506299**	V+vv	
1.8 ie	*159/AM54/AM55/AM5C/AN54*	E	1756	159A4.046, 159A4.000	M	Y		11/89 ▸ 02/93	7703893	**506115**	N	
1.8 ie	*159AN55*	E	1756	159A4.046	M	Y		02/90 ▸ 07/91	5894394	**506859**	N	

• **New** Nouveau **Nuevo** Novo **Nuovo** Nieuw **Neu** Yeni Новый Nou

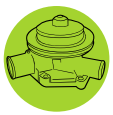

Valeo

Water pump
Pompe à eau
Bomba de água
Bomba de água
Pompa acqua
Waterpomp

Wasserpumpen
Pompa wodna
Vízpumpa
Su pompasi
ВОДЯНОЙ НАСОС

Vodní pumpa
Pompa de apă

			cc						OE	Valeo		
FIAT (.../...)												
Tempra (.../...)												
1.8 ie,1.8 ie 16V	*159/AN54/AN55/AV54/AV55 AZ54/BV54/BV55/BY54/BY55*	E	1756	159A4.046, 835C2.000 836A5.000, 835C4.000	M	Y		02/90 ▸	71719678	**506296**	N	
2.0 ie	*159/AP54/AP55*	E	1995	159A6.046	M	Y		11/89 ▸ 02/93	7694229	**506859**	N	
2.0 ie	*159AP55*	E	1995	159A6.046	M	Y		03/92 ▸ 07/91	5894580	**506075**	V	506092
2.0 ie	*159/AP54/AP55*	E	1995	159A6.046	M	Y		07/91 ▸	71719678	**506296**	N	
2.0 ie	*159AP55*	E	1995	159A6.046	M	Y		02/90 ▸ 02/93	7784977	**506299**	V+vv	
2.0 ie	*159/AP14/AP44*	E	1995	159A6.046	A	Y		07/91 ▸	71719678	**506296**	N	
1.9 TD,1.9 TDs	*159/AI54/AI55/AI5C/AL AQ54/AQ55/BI54/BI55*	D	1929	160B6.046, 160A6.046 160A6.000, 160D1.000	M	Y		11/89 ▸	7696226	**506560**	V+vv	506722
7279465 ▸												
1.9 D	*159/AG54/AG55/AG5C*	D	1929	160A7.000	M	Y		11/89 ▸	46407766	**506559**	N	506723
Tipo												
1.1	*160/AA45/AA55*	E	1108	160A3.000	M	N		01/88 ▸	71713727	**506397**	CR	
1.4	*160/AB55/AB5C/AU53/AU55/AU5C*	E	1372	160A1.000, 159A2.000	M	Y		▸ 1995	7784975	**506119**	V	506386
1.4,1.4 ie	*160/AD53/AU55*	E	1372	160A1.000, 160A1.046	M	Y		01/88 ▸ 02/93	7671810	**506508**	N	
1.4 ie	*160/EA53/EA55/EP53/EP55 EP5C*	E	1372	836A4.000, 160A1.046	M	Y		03/93 ▸ 1995	7784988	**506299**	V+vv	
1.4	*160AU15*	E	1372	160A1.000	A	Y		04/90 ▸ 02/93	7784975	**506119**	V	506386
1.6,1.6 ie	*160/AZ55/EB53/EB55/FB55*	E	1581	835C1.000, 159A3.000	M	Y		03/93 ▸ 1995	7784988	**506299**	V+vv	
1.6	*160/AE55/AE5C/AF55/AZ55/AZ5C/BZ55*	E	1581	160A2.000	M	Y		▸ 02/93	7784975	**506119**	V	506386
7131548 ▸												
1.6,1.6 ie	*160/A1/AZ15*	E	1581	160A2.000, 159A3.048	A	Y		01/88 ▸ 02/93	7671810	**506508**	N	
1.6 ie	*160EC15*	E	1581	159A3.048	A	Y		03/93 ▸ 1994	7784988	**506299**	V+vv	
1.6	*160AZ15*	E	1581	160A2.000	A	Y		▸ 02/93	7784975	**506119**	V	506386
7131548 ▸												
1.6,1.6 ie	*160/AE55/AF55/AZ55/B1 BZ55*	E	1581	160A2.000, 160A2.	M	Y		01/88 ▸	7671810	**506508**	N	
▸ 7131547												
1.6 2ACT	*160AP55*	E	1585	1602.ACT	M	Y		1989 ▸ 1993	7703893	**506115**	N	
1.8 ie,1.8 ie 16V	*160/AY55/CD53/ED53/ED55 EQ53*	E	1756	835C2.000, 159A4.046 836A5.000	M	Y		04/89 ▸ 10/95	71719678	**506296**	N	
1.8 ie,1.8 ie 16V	*160/AM55/AN55*	E	1756	160A5.000, 159A4.000	M	Y		11/89 ▸ 02/93	7703893	**506115**	N	
2.0 ie,2.0 ie 16V	*160/AJ/AJ55/AT/EF53/EF55 GF53*	E	1995	836A3.000, 159A5.046 154E1.000, 159A6.046	M	Y		▸ 10/95	71719678	**506296**	N	
2.0 ie	*160/AJ/AT*	E	1995	159A5.046, 159A6.046	M	Y		06/90 ▸	5894394	**506859**	N	
2.0 ie	*160/AJ/AJ54/AT*	E	1995	159A6.046, 159A5.046	A	Y		▸ 1995	71719678	**506296**	N	
2.0 ie	*160AT*	E	1995	159A6.046	A	Y		06/90 ▸	5894394	**506859**	N	
1.7 D	*160/AG55/AG5C/EG53/EG55/EG5C*	D	1697	149B4.000	M	Y		01/88 ▸ 1995	46407762	**506559**	N	506723
1.9 TD,1.9 TDs	*160/AQ55/AQ5C/AR55/AW55 EI53/EI55/EL55*	D	1929	160B6.046, 160A6.000 160A6.046, 160D1.000	M	Y		01/88 ▸ 1995	7696226	**506560**	V+vv	506722
1.9 D	*160/AH55/EH55*	D	1929	160A7.000	M	Y		1990 ▸ 1995	46407766	**506559**	N	506723
Ulysse (94>98)												
1.8 ie	*220/BB5/BB5U*	E	1761	LFW	M	Y		03/96 ▸ 09/98	9565656788	**506029**	CR	
2.0 ie,2.0 ie Turbo	*220/AC5/AC5U/AD5/CD5*	E	1998	RGX, RFU	M	Y		06/94 ▸ 09/98	9566945688	**506117**	CR	
1.9 TD	*220/AE5/AE5U/AH5/AHX*	D	1905	XUD9TEF/Y, XUD9TEF/K, XUD9TEF/L3	M	Y		03/97 ▸ 09/98	9627667988	**506574**	CR	
7390 ▸												
1.9 TD	*220/AE5/AE5U/AH5/AHX*	D	1905	XUD9TEF/Y, XUD9TEF/K, XUD9TEF/L3	M	Y		06/94 ▸ 03/97	9567521488	**506117**	CR	
▸ 6993												
2.1 TD	*220/AJ5/AJ5U*	D	2088	P8C	M	Y		03/96 ▸ 09/98	9629110980	**506291**	CR	
7333 ▸ 7333												
Ulysse (98>2002)												
1.8 ie	*220BB5*	E	1761	LFW	M	Y		10/98 ▸	9565656788	**506029**	CR	
2.0 ie 16V	*220AQ5*	E	1997	EW10J4/L4	M	Y	20 teeth	10/98 ▸	9640601280	**506918**	CR	506720
2.0 ie 16V	*220AQ5*	E	1997	EW10J4/L4	A	Y	20 teeth	10/98 ▸	9640601280	**506918**	CR	506720
Ulysse												
2.0 ie 16V	*220AQ5*	E	1997	EW10J4	M	Y	20 teeth	10/98 ▸	9670557580	**506918**	CR	
2.0 i 16V	*179BXA1*	E	1997	EW10J4	A	Y	20 teeth	10/98 ▸	9640601280	**506918**	CR	
Ulysse (98>2002)												
2.0 ie 16V	*220/AL5/AV5*	E	1998	RFV	M	Y		10/98 ▸	9566950080	**506530**	CR	
2.0 ie,2.0 ie Turbo	*220/AC5/AD5/CD5*	E	1998	RGX, RFU	M	Y		10/98 ▸	9566945688	**506117**	CR	

• **New** Nouveau **Nuevo** Novo **Nuovo** Nieuw **Neu** Yeni Новый Nou

Valeo

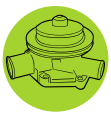

FIAT (.../...)

Ulysse (98>2002) (.../...)

1.9 TD	220/AE5/AH5/AHX	D	1905	XUD9TEF/K, XUD9TEF/L3	M	Y		10/98 ▸	9627667988	**506574**	CR	
2.0 JTD,2.0 JTD 16V	220/AN5/AR50	D	1997	DW10BTED+L4, DW10ATED4	M	Y		10/99 ▸	9569147388	**506575**	CR	
2.1 TD	220AJ5	D	2088	P8C	M	Y		10/98 ▸	9629110980	**506291**	CR	

Ulysse (2002>)

2.0 i 16V	179BXA1	E	1997	EW10J4/L4	M	Y	20 teeth	09/02 ▸	9640601280	**506918**	CR	506720
2.0 i 16V	179BXA1	E	1997	EW10J4/L4	A	Y	20 teeth	09/02 ▸	9640601280	**506918**	CR	506720
2.0 JTD 16V	179BXB1	D	1997	DW10ATED4	M	Y		09/02 ▸	9569147388	**506575**	CR	
2.0 JTD 16V	179BXF1	D	1997	DW10ATED4	A	Y		03/03 ▸	9569147388	**506575**	CR	
2.2 JTD 16V	179BXC1	D	2179	DW12ATED4/L4	M	Y		09/02 ▸	9463623088	**506719**	CR	

Uno (83>89)

55	146AD45	G	1116	138B.000-G	M	Y		04/83 ▸ 11/85	5894580	**506075**	V	506092
45,45 ES,45 Pop	146/AA43/AA45/AA53/AA55 AB53/AB55/CD43/CD45/CD53 CD55, 16CD4CT, 14A/A4AC A5AC/B5AC	E	903	146A1.000, 146A.000	M	Y		01/83 ▸ 10/89	5939200	**506079**	V	
45	16AA4CT, 16CD5CT, 146/CD4C/CD5C	E	903	146A.000		Y		11/85 ▸ 10/89	5939200	**506079**	V	
45,45 S	146/AO43/AO45/AO4A/AO4C AO53/AO55/AO5A, 16A/O4CT O5CT	E	999	156A2.000	M	N		10/85 ▸ 10/89	71713727	**506397**	CR	
55,55 S,60	14AD5AC, 146/AD43/AD45 AD53/AD55/AJ43/AJ45/AJ4C AJ5A, 16A/J4CT/J5CT	E	1116	138B.000, 146A4.000	M	Y		04/83 ▸ 10/89	5894580	**506075**	V	506092
60,60 S,SL	146/AJ53/AJ55	E	1116	146A4.000	M	N		11/85 ▸ 1989	71713727	**506397**	CR	
60 Selecta	146/AJ13/AJ15	E	1116	146A4.000	A	N		10/87 ▸ 1989	71713727	**506397**	CR	
70,70 S,70 SL,70 SX	16AR5CT, 146/AE53/AE55 AE5A/AR53/AR55/AR5A/BE53 BE55/BE5A	E	1301	138B2.000	M	Y		04/83 ▸ 1989	5894580	**506075**	V	506092
-	146/AM53/AM55/BM53	E	1301	146A2.000	M	Y		03/85 ▸ 1989	5894582	**506572**	V	506143
CL	146/AG53/AG55/AG5A	D	1301	127A5.000	M	Y		05/83 ▸ 1986	5890406	**506063**	N	
-	16A65CT, 146/A653/A655	D	1367	146B3.000	M	Y		04/86 ▸ 1989	5896809	**506340**	N	
60	146/AF53/AF55	D	1697	149B3.000	M	Y		10/85 ▸ 1989	46409134	**506144**	N	

Uno (89>95)

Pop	146/EA43/EA53/EA55	E	903	146A.048	M	Y		10/89 ▸ 09/92	5939200	**506079**	V	
Sting,Trend	146/EB53/EB55	E	994	146B4.000	M	Y		10/89 ▸ 12/93	5890406	**506063**	N	
45,45 S	146/EC43/EC45/EC4C/EC53 EC55/EC5C/ED53/ED55/EE53 EE55	E	999	156A2.100, 156A2.000 156A2.246	M	N		10/89 ▸ 12/93	71713727	**506397**	CR	
60 S,S	146/EF53/EF55/ET53/ET55	E	1108	156C.046, 160A3.000	M	N		10/89 ▸ 12/93	71713727	**506397**	CR	
60,Trend	146/EF5C/EG53/EJ55	E	1116	146A4.000, 146A6.000	M	Y		10/89 ▸ 12/92	5890406	**506063**	N	
60	146/EF5C/EG53	E	1116	146A4.000	M	Y		10/89 ▸ 12/92	5894580	**506075**	V	506092
60	146/EG13/EG1C	E	1116	146A4.000	A	Y		07/90 ▸ 12/92	5890406	**506063**	N	
60	146/EG13/EG1C	E	1116	146A4.000	A	N		07/90 ▸ 12/92	71713727	**506397**	CR	
60	146EG15	E	1116	146A4.048	A	Y		07/90 ▸ 12/92	7784974	**506075**	V	506092
-	146EQ53	E	1301	146A2.000	M	Y		10/89 ▸ 03/91	5894582	**506572**	V	506143
70,70 SX	146/EH53/EH55/EI53/EI55 ER53/EU53	E	1372	146C1.000, 146C1.046 146A8.000, 146A8.046	M	Y		10/89 ▸ 12/93	7784978	**506075**	V	506092
70,70S	146/EL53/EL55	E	1372	160A1.048	M	Y		10/89 ▸ 10/92	7784975	**506119**	V	506386
70S	146EK55	E	1372	146C2.028	M	Y		03/95 ▸	46437911	**506524**	vvv	506613
-	146EH15	E	1372	146C1.000	A	Y		10/89 ▸ 12/93	7784978	**506075**	V	506092
45	146/EN53/EN55	D	1301	146B1.000	M	Y		10/89 ▸ 03/92	5890406	**506063**	N	
70,70 S	146/ES53/ES55/ES5C	D	1367	146B3.000	M	Y		10/89 ▸ 07/93	5896809	**506340**	N	
60	146/EO53/EO55	D	1697	146B2.000	M	Y		10/89 ▸ 08/95	46409134	**506144**	N	
-	146EO5C	D	1697	149B3.000	M	Y		10/89 ▸ 08/95	46409136	**506562**	N	
-	146/EP53/EP55	D	1929	149B5.046	M	Y		07/90 ▸ 03/94	46409134	**506144**	N	

Uno CS (87>)

-	146/A753/A75C	E	1116	146A6.000	M	Y		10/87 ▸ 1993	5890406	**506063**	N	
60	16AF5CT, 146/A755/AF5A	D	1697	146B2.000, 149B3.000	M	Y		10/87 ▸ 1993	46409136	**506562**	N	

Uno Mondo (98>)

1.0 i	146EE55	E	999	156A2.246	M	N		07/02 ▸	55184080	**506640**	CR	

• **New** Nouveau **Nuevo** Novo **Nuovo** Nieuw **Neu** Yeni Новый Nou

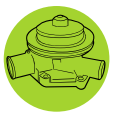

Valeo

Water pump
Pompe à eau
Bomba de água
Bomba de água
Pompa acqua
Waterpomp
Wasserpumpen
Pompa wodna
Vízpumpa
Su pompasi
ВОДЯНОЙ НАСОС
Vodní pumpa
Pompa de apă

		Type Ctr.		cc						OE	Valeo		
FIAT (.../...)													
Uno Mondo (98>) (.../...)													
1.0 i	*146EE55*	E		999	156A2.246	M	N		01/98 ▸	71713727	**506397**	CR	
1.1	*146052, 158350*	E		1108	160A3.000	M	N		07/02 ▸	55184080	**506640**	CR	
1.4	*146EK55*	E		1372	146C2.028	M	Y		01/98 ▸	46437911	**506524**	vvv	506613
1.7 D	*158351, 146E055, 146/E0*	D		1697	146B2.000	M	Y		01/98 ▸	46409134	**506144**	N	
X1/9													
1300	*128AS*	E		1290	128A1.000	M	Y		03/69 ▸ 1978	5894580	**506075**	V	506092
1500	*128AS1*	E		1498	138A2.000	M	Y		10/78 ▸	5894580	**506075**	V	506092
FIAT													
Doblo (2000>2003)													
1.2 i	*223AXA1*	E		1242	223A5.000	M	N		10/00 ▸ 12/03	55184080	**506640**	CR	
1.6 i 16V		F		1596	182B6.000	M	Y		10/01 ▸ 12/03	46444355	●**506523**	V+vv	
1.9 DS,1.9 JTD	*223/AXB1/AXE1*	D		1910	182B9.000, 223A6.000	M	Y		10/00 ▸	46515970	**506590**	SS	
Doblo (2004>2005)													
1.2 i	*223AXA1*	E		1242	223A5.000	M	N	23 teeth	01/06 ▸	55184081	**506686**	CR	
1.2 i	*223AXA1*	E		1242	223A5.000	M	N		01/04 ▸	55184080	**506640**	CR	
1.6 i GNV 16V	*223AXD1*	F		1596	182B6.000-G	M	Y		01/04 ▸ 12/05	46444355	●**506523**	V+vv	
1.6 i 16V	*223AXD1*	E		1596	182B6.000	M	Y		01/04 ▸ 12/05	46444355	●**506523**	V+vv	
1.3 MTJ 16V	*223AXG1*	D		1248	188A9.000	M	Y		01/04 ▸	71745026	**506716**	vvv	
1.9 DS,1.9 JTD	*223/WXF1/ZXB1*	D		1910	223A6.000, 223A7.000	M	Y		01/04 ▸	46515970	**506590**	SS	
Doblo FL													
1.2 i	*223AXA1*	E		1242	223A5.000	M	N		01/05 ▸ 12/05	55221397	**506967**	CR	
FIAT													
Doblo (2006>)													
1.6 i GNV 16V	*223AXD1*	F		1596	182B6.000-G	M	Y		01/06 ▸	46444355	●**506523**	V+vv	
1.4 i 8V	*223AXP1*	E		1368	350A1.000	M	N		01/06 ▸	55221397	**506967**	CR	
1.3 MJTD 16V	*223/AXM1/AXN1*	D		1248	223A9.000, 199A2.000	M	Y		01/06 ▸	71745026	**506716**	vvv	
1.9 MJTD 8V	*223/AXH1/AXL1*	D		1910	223B1.000, 186A9.000 223B2.000	M	Y		01/06 ▸	46515970	**506590**	SS	
Doblo Cargo (2000>2003)													
1.2 i	*223ZXA1*	E		1242	223A5.000	M	N		10/00 ▸	55184080	**506640**	CR	
1.9 DS,1.9 JTD	*223/AXB1/AXE1/ZXB1/ZXE1*	D		1910	223A6.000, 182B9.000	M	Y		10/00 ▸	46515970	**506590**	SS	
Doblo Cargo (2004>2005)													
1.2 i	*223ZXA1*	E		1242	223A5.000	M	N	23 teeth	01/06 ▸	55184081	**506686**	CR	
1.2 i	*223ZXA1*	E		1242	223A5.000	M	N		01/04 ▸	55184080	**506640**	CR	
Doblo Cargo (2000>2003)													
1.6 i 16V	*223WXD1*	F		1596	182B6.000,182B6.000-G	M	Y		10/01 ▸ 12/03	46444355	●**506523**	V+vv	
1.6 i 16V	*223ZXD1*	E		1596	182B6.000	M	Y		10/01 ▸ 12/03	46444355	●**506523**	V+vv	
Doblo Cargo (2004>2005)													
1.6 i GNV	*223WXD1*	F		1596	182B6.000-G	M	Y		01/04 ▸ 12/05	46444355	●**506523**	V+vv	
1.3 MTJ 16V	*223/AXG1/WXG1/ZXG1*	D		1248	188A9.000	M	Y		01/04 ▸	71745026	**506716**	vvv	
1.9 DS,1.9 JTD	*223/AXF1/WXF1/ZXB1/ZXF1*	D		1910	182B9.000, 223A7.000 223A6.000	M	Y		01/04 ▸	46515970	**506590**	SS	
Doblo Cargo (2006>)													
1.6 i GNV	*223WXD1*	F		1596	182B6.000-G	M	Y		01/06 ▸	46444355	●**506523**	V+vv	
1.3 MJTD 16V	*223/WXN1/ZXN1*	D		1248	199A2.000	M	Y		01/06 ▸	71745026	**506716**	vvv	

• **New** Nouveau **Nuevo** Novo **Nuovo** Nieuw **Neu** Yeni Новый Nou

Valeo

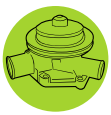

		Type Ctr.		cc						OE	Valeo		
FIAT (.../...)													
Doblo Cargo (2006>) (.../...)													
1.9 MJTD	*223/WXL1/WXR1/ZXR1*	D		1910	223B1.000, 223B2.000	M	Y		01/06 ▸	46515970	**506590**	SS	
Doblo III (2010>)													
1.4 MPi GPL 16V	*198AXA1*	F		1368	192B2.000	M	N		01/10 ▸	55221397	**506967**	CR	
1.4 T-Jet 120 GNV 16V	*263AXG1*	F		1368	198A4.000	M	N		04/10 ▸	55221397	**506967**	CR	
1.4 MPi 16V,1.4 Tjet 16V 1.4 i Turbo MultiAir 16V	*198/AXA1/AXF1/AXG1/AXS1*	E		1368	192B2.000,198A1.000,198A4.000 198A7.000	M	N		01/10 ▸	55221397	**506967**	CR	
Ducato (81>94)													
2.0	*280*	E		1971	170B	M	Y		06/85 ▸ 06/90	9401201400	**506292**	N	
1.9 D,1.9 TD	*280*	D		1929	149B2.000, 149B1.000	M	Y		10/87 ▸ 06/90	46408312	**506293**	N	
2.5 D,2.5 TD	*280*	D		2445	8144-61, 8144-21	M	Y		06/85 ▸ 06/90	99459759	**506474**	N	
2.5 D	*280*	D		2500	CRD93	M	Y		06/85 ▸ 06/90	99459759	**506474**	N	
Ducato (90>94)													
2.0	*290/AY/BY/EH4/EHY/EHYW/EPMY/EPY/MAY MAYW/MTY/MTYW/MZY/NAY/NLY/NZY/RAPY RAY/RTPY/RY*	E		1971	170D-U8, 170B	M	Y		07/90 ▸ 01/94	9401201400	**506292**	N	
Ducato (230) (94>2001)													
2.0,2.0 i	*230/AGMF/AGMP/AGMS/AGMT AGMU/AGWT/AHMF/AHMP/BGMA BGMC/BGMD/BGMF/BGMH/BGMN BGMP/BGMQ/BGMS/BGWN/BGWS BGWT/CGMA/CGMC/CGMD/CGMF CGMH/CGMM/CGMN*	E		1998	XU10J2U/W2, XU102CU/W2	M	Y		02/94 ▸ 12/01	9566945688	**506117**	CR	
1.9 D,1.9 TD	*230/0NMQ/AMMC/AMMD/AMMF AMMQ/ANMA/ANMF/ANMP/ANMQ BLMA/BNMA/BNMF/BNMM/BNMQ ENMF*	D		1905	XUD9A/K, XUD9TEF/W3	M	Y		06/98 ▸ 12/01	9566945688	**506117**	CR	
2.5 D,2.5 TD	*230/ADMF/ADMT/ADMU/AEMP AEMT/AEMU/AFMP/BAMF/BDMA BDMB/BDMD/BDMF/BDMG/BDMH BDMN/BDMQ/BDMR/BDMS/BDMT BEMA/BEMB/BEMD/BEMF/BEMG BEMH/BEMN/BEMQ/BEMR/BEMS BEMT/BFMA/BFMB/BFMD/BFMF BFMG/BFMH/BFMN/BFMQ/BFMR BFMS/BLWF/CDMA/CDMB/CDMD CDME/CDMF/CDMG/CDMH/CDML CDMM/C*	D		2499	8140-67, 8140-47, 8140-47R	M	Y		02/94 ▸ 12/01	99440717	**506514**	N	
2.8 D,2.8 JTD,2.8 TDi	*233CIMN, 230/AIMF/AIMT AIMU/ALMP/ALMT/ALWP/ALWT APMF/APMP/APWP/BIMA/BIMC BIMD/BIMF/BIMH/BIMM/BIMN BIMP/BIMQ/BIMS/BIMT/BLMA BLMF/BLMH/BLMM/BLMN/BLMP BLMQ/BLMS/BLMT/BLMU/BLWA BLWF/BLWN/BLWQ/BLWS/BLWT BPMA/BPMF/BPMN/BPMP/BPMS BPMT/BPWD/BPWF/CEMN/CIMA CIME/CI*	D		2798	8140-63, 8140-43, 8140-43S	M	Y		01/98 ▸ 12/01	99440717	**506514**	N	
2.8 JTD	*230*	D		2798	8140-43S	A	Y		05/01 ▸ 12/01	99440717	**506514**	N	
Ducato (2002>2006)													
2.0 GPL	*244/AAMA/BTMF*	G		1998	RFL	M	Y		01/02 ▸ 06/06	9566945688	**506117**	CR	
2.0,2.0 i	*244/AAMA/APMF/APMP/APMR ATMF/ATMN/ATMP/ATMR/BPMA BPMF/BTMA/BTMF/BTMN/BTMP BTMR/BTMS/BTWF/BTWS/BTWT CTMF/CTMN/CTWN*	E		1998	RFL	M	Y		01/02 ▸ 06/06	9566945688	**506117**	CR	
2.0 JTD	*244/AAMA/AAMF/AAMN/AAMP AAMR/BAMA/BAMF/BAMN/BAMR*	D		1997	RHV	M	Y		01/02 ▸ 06/06	9569147388	**506575**	CR	

• **New** Nouveau **Nuevo** Novo **Nuovo** Nieuw **Neu** Yeni Новый Nou

		Type Ctr.		cc						OE	Valeo		
FIAT (.../...)													
Ducato (2002>2006) (.../...)													
2.3 JTD	*244/ASMF/ASMN/ASMP/ASMR BSMA/BSMF/BSMH/BSMN/BSMP BSMR/BSMS/BSMT/CSMF*	D	2286	FIAE0481C	M	Y		01/02 ▸ 06/06	504033770	**506864**	SS	
2.8 JTD	*244/APMF/APMP/APMR/APWP BPMF/BPMP/BPMR/BPWN/BPWR CPMF/CPMN/CPWN*	D	2798	8140-43S	M	Y		01/02 ▸	99440717	**506514**	N	
Ducato (2006>)													
3.0 GNV 140	*250/CGMC/CGMF/CGMM/CGMR 251/CGMC/CGMF/CGMR*	F	2999	F1CE0441A	M	Y		12/08 ▸	504248581	●**506961**	V		
2.3 MJTD	*250X, 251*	D	2287	23DT	M	Y		06/06 ▸	504033770	**506864**	SS		
3.0 M-Jet2 16V,3.0 MJTD	*250/APMA/APMF/APMR/BPMA BPMF/BPMH/BPMR/CPMA/CPMF CPMH/CPMR/DPMA/XX, 251 DPMF/DPMH/X*	D	2999	F1CE0481D,F1CE3481E	M	Y		07/06 ▸	504248581	●**506961**	V		
Duna													
1.1	*146/A754/A755/A7CT*	E	1116	146A6.000	M	Y		03/87 ▸	5890406	**506063**	N		
1.3	*146/AW54/AW55/AWCT*	E	1301	146A5.000	M	Y		03/87 ▸	5890406	**506063**	N		
1.7 D	*146/AF54/AF55/AFCT*	D	1697	149B3.000	M	Y		03/87 ▸	46409136	**506562**	N		
Fiorino (127) (78>87)													
903	*127/AF/AF1/AIIF*	E	903	127GL.000	M	Y		09/78 ▸ 1985	5939200	**506079**	V		
1050	*127/A1IF/A1IP/A1IV*	E	1049	127A.000	M	Y		09/79 ▸ 1987	5890406	**506063**	N		
Fiorino (147) (81>89)													
1050	*147/AA53/AF14/AP14*	E	1049	127A.000	M	Y		07/86 ▸ 1989	5890406	**506063**	N		
1.3 D	*147/ADF1/DDF1*	D	1301	127A5.000	M	Y		02/81 ▸ 1989	5890406	**506063**	N		
Fiorino (146) (88>93)													
-	*146/C4/CG43/CG53, 16C/G43D/G53D*	E	1116	146A9.000	M	Y		03/88 ▸ 06/93	5890406	**506063**	N		
-	*146/AW53, 16A/W52F/W53F*	E	1301	146A5.000	M	Y		03/88 ▸ 06/93	5890406	**506063**	N		
-	*146CH*	D	1301	146B1.000		Y		07/90 ▸ 06/93	5890406	**506063**	N		
-	*146/CI53/CL53, 16A/F43D/F52F/F53D F53E*	D	1697	149B4.046, 149B3.000 146B2.000	M	Y		03/88 ▸ 06/93	46409136	**506562**	N		
Fiorino (146) (93>2000)													
-	*146/RA52/RA53*	E	1301	146A5.000	M	Y		08/93 ▸ 12/94	5890406	**506063**	N		
-	*146/RB52/RB53/RE52/RE53*	E	1372	146C5.000, 146D5.000	M	Y		07/94 ▸ 09/00	46437915	**506524**	vvv	506613	
LX	*146/RC52/RC53/RF*	E	1581	146C6.000, 146D6.000	M	Y		08/93 ▸ 09/00	46437915	**506524**	vvv	506613	
-	*146RD53*	D	1697	146B2.000	M	Y		08/93 ▸ 09/00	46410562	**506695**	N		
-	*146/RD52/RD53*	D	1697	146B2.000	M	Y		08/93 ▸ 09/00	46409136	**506562**	N		
Fiorino (2007>)													
1.4 i 70-GNV	*225/AXC/BXC1*	F	1368	350A.1000 GNV	M	N		12/07 ▸	55221397	**506967**	CR		
Scudo (95>2003)													
1.6 i	*220WG5, 220ZG5, 220XG59, 220YH5 220XG5, 220YG5*	E	1581	220A2.000	M	Y		07/95 ▸ 12/03	46437914	**506669**	vvv		
1.6 i	*220YH5, 220ZG5, 220YG5, 220XG59 220XG5, 220WG5*	E	1581	220A2.000	M	Y		07/95 ▸ 12/03	46437913	**506670**	vvv		
2.0 i 16V	*220/XQ5/XQ50*	E	1997	EW10J4/L4	M	Y	20 teeth	09/00 ▸ 12/03	9640601280	**506918**	CR	506720	
2.0 i 16V	*220XQ40*	E	1997	EW10J4/L4	A	Y	20 teeth	09/00 ▸ 12/03	9640601280	**506918**	CR	506720	
2.0 i 16V	*220/XQ5/XQ50*	E	1997	EW10J4	M	Y	20 teeth	09/00 ▸ 12/03	9670557580	**506918**	CR		
2.0 i 16V	*220XQ40*	E	1997	EW10J4	A	Y	20 teeth	09/00 ▸ 12/03	9670557580	**506918**	CR		
1.9 D	*220/XM50/XR5A/XU50/YM5/ZM5*	D	1868	DW8/W3, DW8B/L4	M	Y		07/96 ▸	9569147388	**506575**	CR		
1.9 D,1.9 TD 7390 ▸	*220/WH5C/XE5/XE59/XF5 XF59/XH5/XH51/XH5A/XH5B XH50/YE5/YF5/YH5/YH5C/ZE5 ZE5A/ZF5/ZH5/ZH5A/ZH5B*	D	1905	XUD9A/K, XUD9TEF/K, XUD9TEF/L3, XUD9TEF/W3	M	Y		03/97 ▸	9627667988	**506574**	CR		

• **New** Nouveau **Nuevo** Novo **Nuovo** Nieuw **Neu** Yeni Новый Nou

Valeo

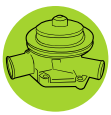

		Type Ctrl.		cc						OE	Valeo	
FIAT (.../...)												
Scudo (95>2003) (.../...)												
1.9 D,1.9 TD 6994 ▸ 7389	*220/WH5C/XE5/XE59/XF5 XF59/XH5/XH51/XH5A/XH5B XH5O/YE5/YF5/YH5/YH5C/ZE5 ZE5A/ZF5/ZH5/ZH5B*	D	1905	XUD9TEF/K, XUD9A/K, XUD9TEF/L3, XUD9TEF/W3	M	Y		07/95 ▸ 01/96	9567521488	**506117**	CR	
2.0 JTD,2.0 JTD 16V	*220/XN50/XP50/XR5A/XR5B*	D	1997	DW10BTED/L4, DW10BTED+L4, DW10ATED4	M	Y	*YP5A/ZP5/ZP5A*	02/00 ▸	9569147388	**506575**	CR	
Scudo (2004>2006)												
2.0 16V	*220/K05A/Z05R/ZU5R*	E	1997	EW10J4/L4	M	Y	20 teeth	01/04 ▸	9654531880	**506918**	CR	506720
2.0 16V	*220K04A*	E	1997	EW10J4/L4	A	Y	20 teeth	01/04 ▸	9654531880	**506918**	CR	506720
2.0 16V	*220/K05A/Z05R/ZU5R*	E	1997	EW10J4	M	Y	20 teeth	01/04 ▸ 12/06	9670557580	**506918**	CR	
2.0 16V	*220K04A*	E	1997	EW10J4	A	Y	20 teeth	01/04 ▸ 12/06	9670557580	**506918**	CR	
1.9 D	*220/YU5R/Z05R/ZU5R*	D	1868	DW8B/L4	M	Y		01/04 ▸	9569147388	**506575**	CR	
2.0 JTD,2.0 JTD 16V	*220/KP5A/YP5R/YV5R/ZP5R ZV5R, 222/0ZP5/0ZPS/0ZV5 KR5A*	D	1997	DW10BTED/L4, DW10BTED+L4, DW10ATED4	M	Y		01/04 ▸	9569147388	**506575**	CR	
Scudo (2007>)												
1.6 MJTD,1.6 MJTD 16V	*270ZXH1, 272*	D	1560	DV6UC,DV6UTED4	M	Y		01/07 ▸	9654514780	**506715**	CR	
Strada Pick Up												
Trekking	*178EXG*	E	1242	178B5.000	M	N		03/99 ▸	46526243	**506640**	CR	
Trekking	*178EXG*	E	1242	178B5.000	M	N		03/99 ▸	46531183	**506397**	CR	
Trekking	*178/EX/EXH*	D	1697	176A3.000F, 176A3.000	M	Y		03/99 ▸ 10/99	46757574	**506712**	N	
Trekking	*178/EX/EXH*	D	1697	176A3.000F, 176A3.000	M	Y		03/99 ▸ 10/99	46445405	**506298**	N	
Trekking	*178EYD1*	D	1910	223A6.000	M	Y		12/00 ▸ 03/03	46515970	**506590**	SS	
Strada pick up (2003>)												
1.2 i	*178EYA1*	E	1242	188A4.000	M	N		03/03 ▸	55184080	**506640**	CR	
1.9 Ds,1.9 JTD	*178/EYD1/EYF1*	D	1910	223A6.000, 188A2.000	M	Y		03/03 ▸	46515970	**506590**	SS	
Talento												
2.0	*290/U4/UA4/UEH4/UT4*	E	1971	170B	M	Y		11/88 ▸ 1994	9401201400	**506292**	N	
1.9 D	*290/UAK/UEHK/UK/UTK*	D	1929	149B1.000	M	Y		03/88 ▸ 1994	46408312	**506293**	N	
FORD												
Escort (80>86)												
1.1		E	1117	GPA, GMA		Y		08/80 ▸ 02/86	5008470	**506000**	CR	
1.1		E	1117	GLA		Y		08/82 ▸ 02/86	5024603	**506001**	N	
1.3		E	1296	JPA		Y		08/80 ▸ 02/86	5008470	**506000**	CR	
1.6,1.6 Turbo,1.6 i		E	1597	LUE, LUA, LRA, LNA		Y		08/80 ▸ 02/86	5008470	**506000**	CR	
1.6 Turbo		E	1597	LNA		Y		01/86 ▸ 02/86	5020651	**506008**	CR	
1.6		E	1598	LPA	A	Y		08/80 ▸ 12/85	5008470	**506000**	CR	
1.6		E	1598	LPA	A	Y		01/86 ▸ 02/86	5020651	**506008**	CR	
1.6		E	1598	LPA		Y		08/80 ▸ 12/85	5008470	**506000**	CR	
1.6		E	1598	LPA		Y		01/86 ▸ 02/86	5020651	**506008**	CR	
1.6 D		D	1608	LT		Y		04/84 ▸ 02/86	5023817	**506165**	N	
Escort (86>90)												
1.1		E	1117	GSG		Y		01/86 ▸ 1990	5008470	**506000**	CR	
1.3		E	1297	JLA	M	Y		01/86 ▸ 12/88	5024603	**506001**	N	
1.3		E	1297	JLA		Y		01/86 ▸ 12/88	5024603	**506001**	N	
1.4,1.4 i	*GAF*	E	1392	FUA, FU	M	Y		01/86 ▸ 1990	5020651	**506008**	CR	
1.4		E	1392	FUA		Y		01/86 ▸ 1990	5020651	**506008**	CR	
1.6,1.6 i		E	1597	LRB, LUC	M	Y		01/86 ▸ 1990	5020651	**506008**	CR	
1.6		E	1597	LUC	A	Y		01/86 ▸ 1990	5020651	**506008**	CR	
1.6 Turbo,1.6 i		E	1597	LRB, LNB, R7		Y		01/86 ▸ 1990	5020651	**506008**	CR	
1.6 D		D	1608	LT	M	Y		01/86 ▸ 1989	5023817	**506165**	N	
1.6 D		D	1608	LT		Y		01/86 ▸ 1989	5023817	**506165**	N	
1.8 D		D	1753	RT	M	Y		08/88 ▸ 1990	1023645	**506529**	SS	
Escort (90>94)												
1.3,1.3 i	*AAL/AA/XF, ABL/AA/XE*	E	1299	J6A, JBD	M	Y		09/90 ▸ 12/94	5020651	**506008**	CR	

• **New** Nouveau **Nuevo** Novo **Nuovo** Nieuw **Neu** Yeni Новый Nou

			CC						OE	Valeo		
FORD (.../...)												
Escort (90>94) (.../...)												
1.3,1.3 i	*AAL//AA/XF, ABL//AA/XE AVL, ANL//XE*	E	1299	JBE, JBD, J6A	M	Y		05/91 ▸ 12/94	6683522	**506127**	N	
1.4,1.4 i	*AAL/BC/CC/CH, ALLCG, ABL BC/CC/CH, ANL/3L/BE/CC AVL//CC*	E	1392	FUH, F6G, F6F	M	Y		09/90 ▸ 12/94	5020651	**506008**	CR	
1.6,1.6 i	*AAL/DC/FC/GC, ALLGG, ABL DC/FC/GC, ANL/DF/FF/GC*	E	1597	LJF, LUJ, LUK, LJE	M	Y		09/90 ▸ 12/94	5020651	**506008**	CR	
1.6 i	*ABLWK, ALLWL, ANLWL, AAL/WL*	E	1597	L1E	M	Y		09/92 ▸ 12/94	5025607	**506284**	N	
1.6	*AALEE*	E	1597	LUK	A	Y		09/90 ▸ 12/94	5020651	**506008**	CR	
1.6 i	*AAL*	E	1597	L1E	A	Y		09/92 ▸ 12/94	5025607	**506284**	N	
1.8 i	*AAL/RH/RL, ABL//RK/SE/SH/TH/TL ANLSK, ALL/RH/TK*	E	1796	RQB, RDA	M	Y		01/92 ▸ 12/94	5025607	**506284**	N	
1.8 i	*AAL*	E	1796	RDA	A	Y		01/92 ▸ 12/94	5025607	**506284**	N	
2.0 i 16V	*ABL/4Y0/LF/LL*	E	1998	N7A	M	Y		02/91 ▸ 12/94	6189520	**506300**	N	
1.8 D	*AAL/HF/HL, ANLHH, AVL68, ABL/D/HK*	D	1753	RTE	M	Y		09/90 ▸ 12/94	1023645	**506529**	SS	
1.8 TD	*AALIM*	D	1753	RFD	M	Y		07/93 ▸ 12/94	5020713	**506642**	N	
Escort (95>2001)												
1.3 i	*AAL/6F/XE, AFLXE, ABL/6E/XE, AVL ANL//6H*	E	1299	J6A, J4	M	Y		01/95 ▸ 09/01	6683522	**506127**	N	
1.4 i	*ABL3H, AFL3J, ALL3K, ANL3L, AVL3 AAL/3J*	E	1392	F4B	M	Y		01/95 ▸ 09/01	5020651	**506008**	CR	
1.6 i	*AAL/WL, AFLWL, ALLWM, ANLWM, ABL WK*	E	1597	L1H, L1E, L1K	M	Y		01/95 ▸ 05/98	5025607	**506284**	N	
1.6 i	*ABLAM, AFLAM, ALLAN, ANLAN, AAL/AM*	E	1597	L1K	A	Y		01/95 ▸ 05/98	5025607	**506284**	N	
1.8 i	*AAL/9M/RK, ABL/9M/RK, AFL/9M/RK ALL//90/RK, ANL/9M/RK*	E	1796	RKC, RDA, RQB	M	Y		01/95 ▸ 05/98	5025607	**506284**	N	
2.0 i 16V	*ABL//4Y0*	E	1998	N7A	M	Y		08/95 ▸ 08/96	7087383	**506300**	N	
1.8 D	*AAL/7L, AFL7K, ANL7N, AVL, ABL/7K 7KC*	D	1753	RTH	M	Y		01/95 ▸ 09/01	1023645	**506529**	SS	
1.8 TD	*AAL/1M/97/BN, ABL/1L/97 BN/BNC, AFL/1L/97/BN AVL18, ANL/1N/97/BN*	D	1753	RFD, RFS, RV	M	Y		01/95 ▸ 09/01	5024297	**506301**	SS	
Fiesta (76>83)												
0.9		E	957	TKA	M	Y		06/76 ▸ 08/83	6039328	**506001**	N	
1.1		E	1117	GL-CVH		Y		06/76 ▸ 08/83	6039328	**506001**	N	
1.3		E	1296	J3E		Y		03/77 ▸ 08/83	5024603	**506001**	N	
1.6		E	1597	L3A		Y		10/81 ▸ 08/83	5024603	**506001**	N	
Fiesta (83>89)												
0.9		E	957	TLA, TKB	M	Y		08/83 ▸ 1989	5024603	**506001**	N	
1.1	*FBD, FVD*	E	1117	GL-CVH	M	Y		08/83 ▸ 1989	5024603	**506001**	N	
1.1	*FBD*	E	1117	GL-CVH	A	Y		02/86 ▸ 1989	5024603	**506001**	N	
1.3		E	1296	JP		Y		08/83 ▸ 12/85	5024603	**506001**	N	
1.4		E	1392	FUA		Y		01/86 ▸ 1989	5020651	**506008**	CR	
1.6		E	1597	LU		Y		02/84 ▸ 12/85	5008470	**506000**	CR	
1.6		E	1597	LU, LUC		Y		01/86 ▸ 1989	5020651	**506008**	CR	
1.6 D		D	1608	LTB		Y		02/84 ▸ 1989	5023817	**506165**	N	
Fiesta (89>95)												
1.1	*FAJ/1B/AB/BB, FBJ/1A/AA/BA*	E	1118	GUE	M	Y		02/89 ▸ 04/91	5025908	**506012**	N	
1.1,1.1 i	*FAJ/1B/2C/2D/2F/AB/BB/KC KD/KF, FBJ/1A/1B/2B/2C/2E AA/BA/BB/KB/KC/KE*	E	1118	G6A, GUE	M	Y		05/91 ▸ 07/95	6683522	**506127**	N	
1.1	*FAJCB, FBJCA*	E	1118	GUE	A	Y		02/89 ▸ 04/91	5025908	**506012**	N	
1.1	*FAJCB, FBJCA*	E	1118	GUE	A	Y		05/91 ▸ 12/92	6683522	**506127**	N	
1.3,1.3 i	*FAJ/XD, FBJ/WC/XC*	E	1299	JBC, J6B	M	Y		02/89 ▸ 04/91	5025908	**506012**	N	
1.3,1.3 i	*FAJ/WD/WF/XD, FBJ/WC/WE XC*	E	1299	J6B, JBC	M	Y		05/91 ▸ 07/95	6683522	**506127**	N	
1.3 i	*FBJZC, FAJ/ZC/ZD/ZF*	E	1299	J6B	A	Y		05/91 ▸ 07/95	6683522	**506127**	N	
1.4,1.4 i	*FAJ/5H/DC/LC/MC/MD/ME FBJ/5G/DB/LB/MB/MC/MD*	E	1392	F4A, F6E, FUF	M	Y		02/89 ▸ 07/95	5020651	**506008**	CR	

• **New** Nouveau **Nuevo** Novo **Nuovo** Nieuw **Neu** Yeni Новый Nou

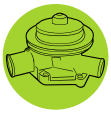

Type Ctr.	cc					OE	Valeo		
FORD (.../...)									
Focus (98>2001) (.../...)									
1.8 TDCi,1.8 TDi *DAY, DBW, DBY, DFW, DFY DNW, DNY, DAW*	D	1753	BHDA/B, C9DA/B/C, 1.8 TC LYNX, FFDA	M	Y		05/01 ▸ 10/01	1131878	**506641**	N	
Focus (2001>2003)									
1.4 i 16V *DBW, DFW, DNW, DAW*	E	1388	FXDC, FXDA	M	Y		11/01 ▸	1350461	**506472**	N	
1.6 i 16V *DBW, DFW, DNW, DAW*	E	1596	FYDC, FYDA	M	Y		11/01 ▸	1350461	**506472**	N	
1.6 i 16V *DBW, DFW, DNW, DAW*	E	1596	FYDA	A	Y		11/01 ▸	1350461	**506472**	N	
1.8 i 16V *DBW, DFW, DNW, DAW*	E	1796	EYDA, EYDC	M	Y		11/01 ▸	1094596	**506604**	N	
1.8 i 16V *DFW*	E	1796	EYDA	A	Y		11/01 ▸	1094596	**506604**	N	
2.0 i 16V,2.0 i Turbo 16V *DBW, DFW, DNW, DAW*	E	1988	EDDC, EDDA, ZH20EST, D20RS	M	Y		11/01 ▸	1094596	**506604**	N	
1.8 TDCi,1.8 TDdi *DAY, DBW, DBY, DFW, DFY DNW, DAW*	D	1753	1.8 TC LYNX, FFDA, C9DA/B/C, BHDA/B	M	Y		11/01 ▸	1132355	**506641**	N	
Focus (2004>)									
1.8 i CNG 16V,1.8 i Flexifuel 16V	F	1798	DURA18CNG, Q7DA	M	Y		11/04 ▸	1434347	**506694**	N	
1.4 i 16V	E	1388	ZETEC-S 1.4 EFI	M	Y		04/05 ▸	1406479	**506893**	N	
1.4 i 16V	E	1388	ZETEC-S 1.4 EFI	M	Y		09/04 ▸	1350461	**506472**	N	
1.6 Ti-VCT 16V,1.6 i,1.6 i 16V	E	1596	16LSEZ,HWDA/B,HXDA	M	Y		04/05 ▸	1406479	**506893**	N	
1.6 Ti-VCT 16V,1.6 i 16V	E	1596	HWDA/B,HXDA	A	Y		04/05 ▸	1406479	**506893**	N	
1.6 Ti-VCT 16V,1.6 i 16V	E	1596	HXDA, HWDA/B	M	Y		09/04 ▸	1350461	**506472**	N	
1.6 i	E	1596	16LSEZ	M	Y		09/04 ▸ 05/05	1229571	**506809**	N	
1.6 Ti-VCT 16V,1.6 i 16V	E	1596	HWDA/B, HXDA	A	Y		09/04 ▸	1350461	**506472**	N	
2.0 i 16V	E	1999	2.0 DURATEC HE	M	Y		11/04 ▸	1434347	**506694**	N	
2.0 i 16V	E	1999	2.0 DURATEC HE	A	Y		11/04 ▸	1434347	**506694**	N	
2.5 i 20V	E	2521	2.5 DURATEC	M	Y		12/04 ▸ 12/07	1388504	**506325**	CR	
1.6 TDCi 16V,1.6 TDCi DPF 16V	D	1560	D16FAP, HHDA/B	M	Y		09/04 ▸	1364681	**506715**	CR	
1.6 TDCi 16V	D	1560	HHDA/B	A	Y		09/04 ▸	1364681	**506715**	CR	
1.6 TDCi 16V	D	1560	HHDA/B	A	Y		09/04 ▸	1350461	**506472**	N	
1.8 TDCi	D	1753	KKDA	M	Y		11/04 ▸	1131878	**506641**	N	
2.0 TDCi 16V,2.0 TDCi DPF 16V	D	1997	D20TDCIFAP, D20TDCI	M	Y		09/04 ▸	1232499	**506719**	CR	
Focus II (2007>)									
1.4 16V	E	1388	ZETEC-S 1.4 EFI	M	Y		12/07 ▸	1472867	**506893**	N	
1.6 16V,1.6 Ti-VCT	E	1596	HXDA,ZETEC-S 1.6 EFI	M	Y		12/07 ▸	1472867	**506893**	N	
1.6 16V	E	1596	ZETEC-S 1.6 EFI	A	Y		12/07 ▸	1472867	**506893**	N	
2.0 TDCi	D	1997	2.0 DURATORQ,2.0 DURATORQ/F	M	Y		12/07 ▸	1232499	**506719**	CR	
Focus C-Max (03>07)									
1.8 i CNG 16V,1.8 i Flexifuel 16V	F	1798	DURA18CNG, Q7DA	M	Y		06/06 ▸	1434347	**506694**	N	
1.6 Ti-VCT 16V,1.6 i 16V *DM*	E	1596	HWDA/B, HXDA	M	Y		06/03 ▸	1350461	**506472**	N	
1.6 Ti-VCT 16V,1.6 i 16V *DM*	E	1596	HWDA/B,HXDA	M	Y		04/05 ▸ 02/07	1406479	**506893**	N	
1.8 i 16V *DMIC, DMJC*	E	1798	CSDA, DURA18	M	Y		10/03 ▸	1434347	**506694**	N	
2.0 i 16V *DM*	E	1999	2.0 DURATEC HE	M	Y		06/03 ▸	1434347	**506694**	N	
2.0 i 16V	E	1999	2.0 DURATEC HE	A	Y		11/05 ▸	1434347	**506694**	N	
1.6 TDCi 16V *DMBF, DMIF, DMJF, DM* 1.6 TDCi DPF 16V	D	1560	HHDA/B, D16FAP	M	Y		10/03 ▸	1364681	**506715**	CR	
1.6 TDCi 16V *DMIG, DMJG* 1.6 TDCi DPF 16V	D	1560	D16FAP, HHDA/B	A	Y		10/03 ▸	1364681	**506715**	CR	
1.8 TDCi	D	1753	KKDA	M	Y		01/05 ▸	1131878	**506641**	N	
2.0 TDCi 16V *DMII, DMJI, DM* 2.0 TDCi DPF 16V	D	1997	D20TDCI, D20TDCIFAP	M	Y		06/03 ▸	1232499	**506719**	CR	
Focus C-Max (2007>)									
1.8 i 16V	F	1798	1.8 DURATEC-HE	M	Y		03/07 ▸	1434347	**506694**	N	
1.6 i 16V	E	1596	1.6 ZETEC-S	M	Y		03/07 ▸	1472867	**506893**	N	
1.8 i 16V	E	1798	1.8 DURATEC-HE	M	Y		03/07 ▸	1434347	**506694**	N	
2.0 i 16V	E	1999	2.0L DURATEC-HE	M	Y		03/07 ▸	1434347	**506694**	N	
2.0 i 16V	E	1999	2.0L DURATEC-HE	A	Y		03/07 ▸	1434347	**506694**	N	
1.6 TDCi 16V,1.6 TDCi DPF 16V	D	1560	1.6 DURATORQ,1.6 DURATORQ/F	M	Y		03/07 ▸	1364681	**506715**	CR	
1.8 TDCi	D	1753	1.8 TC LYNX	M	Y		03/07 ▸	1131878	**506641**	N	
2.0 TDCi 16V,2.0 TDCi DPF 16V	D	1997	2.0 DURATORQ,2.0 DURATORQ/F	M	Y		02/07 ▸	1232499	**506719**	CR	
Fusion (2002>2005)									
1.25 i 16V	E	1242	1.25 ZETEC-S/DU	M	Y		08/04 ▸ 09/05	1350461	**506472**	N	

• **New** Nouveau **Nuevo** Novo **Nuovo** Nieuw **Neu** Yeni Новый Nou

Valeo

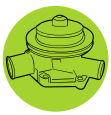

			cc						OE	Valeo		
FORD (.../...)												
Fusion (2002>2005) (.../...)												
1.25 i 16V		E	1242	1.25 ZETEC-S/DU	M	Y		08/04 ▸ 09/05	1406479	**506893**	N	
1.4 i 16V		E	1388	ZETEC-S 1.4 EFI	M	Y		06/02 ▸ 04/05	1350461	**506472**	N	
1.4 i 16V		E	1388	ZETEC-S 1.4 EFI	M	Y		04/05 ▸ 09/05	1406479	**506893**	N	
1.6 i 16V		E	1596	ZETEC-S 1.6 EFI	M	Y		06/02 ▸ 04/05	1350461	**506472**	N	
1.6 i 16V		E	1596	ZETEC-S 1.6 EFI	M	Y		04/05 ▸ 09/05	1406479	**506893**	N	
1.6 i 16V		E	1596	ZETEC-S 1.6 EFI	A	Y		04/05 ▸ 09/05	1406479	**506893**	N	
1.6 i 16V		E	1596	ZETEC-S 1.6 EFI	A	Y		03/04 ▸ 05/05	1364152	**506694**	N	
1.4 TDCi		D	1399	F6JA	M	Y		06/02 ▸ 09/05	1366614	**506714**	CR	
1.6 TDCi 16V		D	1560	HHDA/B	M	Y		11/04 ▸ 09/05	1364681	**506715**	CR	
Fusion (2005>)												
1.2 i 16V		E	1242	1.25 ZETEC-S/DU	M	Y		10/05 ▸	1406479	**506893**	N	
1.4 i 16V		E	1388	ZETEC-S 1.4 EFI	M	Y		10/05 ▸	1406479	**506893**	N	
1.6 i 16V		E	1596	ZETEC-S 1.6 EFI	M	Y		10/05 ▸	1406479	**506893**	N	
1.6 i 16V		E	1596	ZETEC-S 1.6 EFI	A	Y		10/05 ▸	1406479	**506893**	N	
1.4 TDCi		D	1399	F6JC	M	Y		10/05 ▸	1366614	**506714**	CR	
1.6 TDCi 16V		D	1560	HHDA/B	M	Y		10/05 ▸	1364681	**506715**	CR	
Galaxy (95>2000)												
2.0 i	*WGRNSE*	E	1998	NSE	M	Y		05/95 ▸	7087383	**506300**	N	
2.0 i	*WGRNSE*	E	1998	NSE	A	Y		05/95 ▸	7087383	**506300**	N	
2.3 i 16V	*WGRY5*	E	2295	Y5	M	Y		01/97 ▸	7087383	**506300**	N	
2.3 i 16V	*WGRY5*	E	2295	Y5	A	Y		01/97 ▸	7087383	**506300**	N	
2.8 i VR6	*WGRAAA*	E	2792	PW	M	Y		05/95 ▸	1059843	**506484**	N	
2.8 i VR6	*WGRAAA*	E	2792	PW	A	Y		05/95 ▸	1059843	**506484**	N	
1.9 TDi	*WGR/1Z1/AFN*	D	1896	1.9N, 1.9P	M	Y		11/95 ▸	1031369	**506667**	N	506666
Galaxy (2000>)												
2.0 i		E	1998	NSE	M	Y		01/01 ▸	7087383	**506300**	N	
2.3 i 16V		E	2295	Y5	M	Y		04/00 ▸	7087383	**506300**	N	
2.3 i 16V		E	2295	Y5	A	Y		04/00 ▸	7087383	**506300**	N	
2.8 i V6		E	2792	PW-204	M	Y		04/00 ▸	1059843	**506484**	N	
2.8 i V6		E	2792	PW-204	A	Y		04/00 ▸	1059843	**506484**	N	
1.9 TDi		D	1896	1.9TI, 1.9TC	M	Y		04/00 ▸	1100635	**506699**	CR	
1.9 TDi		D	1896	1.9TI	M	Y		02/03 ▸	1459215	**506700**	CR	
1.9 TDi		D	1896	1.9TC	A	Y		04/00 ▸	1100635	**506699**	CR	
Galaxy CA1 (2006>)												
2.0 i 16V		E	1999	2.0 DURATEC HE	M	Y		04/06 ▸	1434347	**506694**	N	
2.5 i 20V		E	2521	2.5 DURATEC	M	Y		04/06 ▸ 04/10	1388504	**506325**	CR	
1.8 TDCi		D	1753	1.8 TCD LYNX, 1.8 TC LYNX	M	Y		04/06 ▸	1131878	**506641**	N	
2.0 TDCi 16V		D	1997	2.0TDCIDURATORQ	A	Y		04/06 ▸	1232499	**506719**	CR	
2.0 TDCi 16V		D	1997	2.0 DURATORQ,2.0TDCIDURATORQ	M	Y		04/06 ▸	1232499	**506719**	CR	
Granada (77>82)												
1600		E	1593	LCN		Y		07/81 ▸ 08/82	5011864	**506009**	N	
1600		E	1593	LCN		Y		07/81 ▸ 08/82	5013274	**506858**	N	
1700	*GMVU, GMYU*	E	1699	MY	M	Y		09/77 ▸ 07/81	5013267	**506009**	N	
1700	*GMVU, GMYU*	E	1699	MY	M	Y		06/79 ▸ 07/81	5013274	**506858**	N	
2000		E	1993	NE/NS, NC	M	Y		09/77 ▸ 08/82	5013267	**506009**	N	
2000		E	1993	NE/NS, NC	M	Y		06/79 ▸ 08/82	5013274	**506858**	N	
2300		E	2294	YY	M	Y		09/77 ▸ 01/79	5005193	**506173**	N	
2300		E	2294	YY	A	Y		09/78 ▸ 01/79	5005193	**506173**	N	
2800,2800 i		E	2792	PR, PY	M	Y		09/77 ▸ 01/79	5005193	**506173**	N	
2800		E	2792	PY	A	Y		09/77 ▸ 01/79	5005193	**506173**	N	
2800		E	2792	PY		Y		09/77 ▸ 01/79	5005193	**506173**	N	
2100 D		D	2112	WT	M	Y		09/78 ▸ 08/81	5004976	**506247**	N	
2500 D	*GFU8D*	D	2499	STR	M	Y		08/81 ▸ 08/82	5024638	**506170**	N	
Ka (1996>)												
1.3 i	*RB1, RBT*	E	1299	JJB, J4M, DURATEC 1.3 EFI J4D, BAJA, J4K, JJF, JJD	M	Y		09/96 ▸	1020567	**506581**	N	

• **New** Nouveau **Nuevo** Novo **Nuovo** Nieuw **Neu** Yeni Новый Nou

Type Ctr.		cc						OE	Valeo		
FORD (.../...)											
Ka (1996>) (.../...)											
1.6 i *RB1S*	E	1599	CDA/B/C	M	Y		02/03 ▸	1020567	**506581**	N	
Ka (2008>)											
1.2 i	E	1242	1.2 DURATEC	M	N		12/08 ▸	1535462	**506967**	CR	
Kuga											
2.5 T 20V	E	2521	2.5 DC-ST	M	Y		10/08 ▸ 04/10	1388504	**506325**	CR	
2.5 T 20V	E	2521	2.5 DC-ST	A	Y		10/08 ▸ 04/10	1388504	**506325**	CR	
2.0 TDCi	D	1997	2.0 DURATORQ/F	M	Y		04/08 ▸	1232499	**506719**	CR	
Maverick (93>98)											
2.4 i *TBFNKU, KBF/NKQ/NKU/NKV/NYQ/NYV*	E	2389	BF	M	Y		02/93 ▸ 03/98	1962054	**506836**	N	
2.7 TD *KVP/NKQ/NKV/NYQ/NYV*	D	2663	VP	M	Y		02/93 ▸ 04/96	1962054	**506836**	N	
2.7 TD,2.7 TDi *KBF/NVQ, KVP/NKQ/NKV/NYQ NYV, TBF/UUQ/UVQ*	D	2663	VPI, VP	M	Y		02/93 ▸ 03/98	1960039	**506733**	V+V	
Maverick (2000>)											
2.3 i	E	2261	L3-150	M	Y		09/02 ▸ 08/04	1434347	**506694**	N	
Mondeo (93>2000)											
1.6 i *BFP, BNP, BAP*	E	1597	L1J-90, L1, L1F	M	Y		01/93 ▸ 08/00	6878045	**506283**	N	
1.8 i *BFP, BAP//4, BNP//4*	E	1796	RKA, RKJ	M	Y		01/93 ▸ 08/00	6878045	**506283**	N	
1.8 i *BFP, BNP, BAP*	E	1796	RKA, RKJ	A	Y		06/93 ▸ 08/00	6878045	**506283**	N	
2.0 i *BFP, BNP, BAP*	E	1988	NGA	M	Y		08/96 ▸ 08/00	6878045	**506283**	N	
2.0 i *BFP, BNP, BAP*	E	1988	NGA	A	Y		08/96 ▸ 08/00	6878045	**506283**	N	
2.0 i *BAP/, BFP//4, BNP//4*	E	1998	NGA	M	Y		01/93 ▸ 08/96	6878045	**506283**	N	
2.0 i *BFP, BNP, BAP*	E	1998	NGA	A	Y		06/93 ▸ 08/96	6878045	**506283**	N	
1.8 TD *BFP, BNP, BAP*	D	1753	RFN	M	Y		09/93 ▸ 08/96	5028472	**506287**	SS	
1.8 TD *BFP, BNP, BAP*	D	1753	RFN	M	Y		08/96 ▸ 08/00	1023645	**506529**	SS	
Mondeo (2000>)											
1.8 i 16V *WFO/AXX/FXX/NXX*	E	1798	CGBB, CHBA, CGBA, CHBB	M	Y		10/00 ▸	1313167	**506694**	N	
2.0 i 16V *WFO/AXX/FXX/NXX*	E	1999	CJBB, CJBA	M	Y		10/00 ▸	1313167	**506694**	N	
2.0 i 16V *WFO/AXX/FXX/NXX*	E	1999	CJBB, CJBA	A	Y		10/00 ▸	1313167	**506694**	N	
2.0 DI 16V,2.0 TDCi 16V 2.0 TDDI 16V *WFO/AXX/FXX/NXX*	D	1998	D6BA, D5BA, FMBA	M	Y		10/00 ▸	1347102	**506693**	N	
2.0 TDCi 16V *WFO/AXX/FXX/NXX*	D	1998	FMBA	A	Y		10/01 ▸	1347102	**506693**	N	
Mondeo (2003>)											
1.8 SCi 16V	E	1798	ZH18	M	Y		06/03 ▸	1313167	**506694**	N	
Mondeo (2005>)											
1.8 i 16V	E	1798	DURA18	M	Y		05/05 ▸	1434347	**506694**	N	
2.0 i 16V	E	1999	2.0 DURATEC HE	M	Y		05/05 ▸	1434347	**506694**	N	
2.0 i 16V	E	1999	2.0 DURATEC HE	A	Y		05/05 ▸	1434347	**506694**	N	
Mondeo III (2007>)											
1.6 Ti-VCT 16V	E	1596	1.6 ZETEC-S	M	Y		06/07 ▸	1472867	**506893**	N	
2.0 16V	E	1999	2.0 DURATEC HE	M	Y		06/07 ▸	1434347	**506694**	N	
2.3 16V	E	2261	2.3 DURATEC HE	A	Y		09/07 ▸	1434347	**506694**	N	
2.5 20V	E	2521	2.5 DURATEC	M	Y		06/07 ▸ 03/10	1388504	**506325**	CR	
1.8 TDCi	D	1753	1.8 TCD LYNX, 1.8 TC LYNX	M	Y		06/07 ▸	1131878	**506641**	N	
2.0 TDCi	D	1997	2.0TDCIDURATORQ, 2.0 DURATORQ	M	Y		06/07 ▸	1232499	**506719**	CR	
2.0 TDCi	D	1997	2.0TDCIDURATORQ	A	Y		06/07 ▸	1232499	**506719**	CR	
Orion (83>90)											
1300	E	1296	JPA	M	Y		09/83 ▸ 02/86	5008470	**506000**	CR	
1300	E	1296	JP	M	Y		02/86 ▸ 1990	5020651	**506008**	CR	
1400,1400 i	E	1392	FUA, F6B	M	Y		02/86 ▸ 1990	5020651	**506008**	CR	
1600 i	E	1597	LRA	M	Y		09/83 ▸ 02/86	5008470	**506000**	CR	
1600,1600 i	E	1597	LUA, LR	M	Y		02/86 ▸ 1990	5020651	**506008**	CR	
1600	E	1597	LUA	A	Y		02/86 ▸ 1990	5020651	**506008**	CR	
1600 i	E	1597	LR		Y		07/89 ▸ 1990	5020651	**506008**	CR	

• **New** Nouveau **Nuevo** Novo **Nuovo** Nieuw **Neu** Yeni Новый Nou

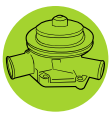

Type Ctr.		cc						OE	Valeo		
FORD (.../...)											
Orion (83>90) (.../...)											
1600	E	1598	LPA	M	Y		09/83 ▸ 12/85	5008470	**506000**	CR	
1600	E	1598	LPA	M	Y		01/86 ▸ 02/86	5020651	**506008**	CR	
1600	E	1598	LPA	A	Y		09/83 ▸ 12/85	5008470	**506000**	CR	
1600	E	1598	LPA	A	Y		01/86 ▸ 02/86	5020651	**506008**	CR	
1600 D	D	1608	LT	M	Y		09/83 ▸ 1988	5023817	**506165**	N	
1800 D	D	1753	RT	M	Y		08/88 ▸ 1990	1023645	**506529**	SS	
Orion (90>93)											
1.3 *AFL*	E	1297	JB	M	Y		04/91 ▸ 09/93	6683522	**506127**	N	
1.3 i *AFL*	E	1299	J6A	M	Y		05/91 ▸ 09/93	6683522	**506127**	N	
1.4,1.4 i *AFL*	E	1392	FUH, F6G, F6F	M	Y		09/90 ▸ 09/93	5020651	**506008**	CR	
1.6,1.6 i *AFL*	E	1597	LUK, LJF, LUJ, LJE	M	Y		09/90 ▸ 09/93	5020651	**506008**	CR	
1.6 i *AFL*	E	1597	L1E	M	Y		01/92 ▸ 09/93	5025607	**506284**	N	
1.6 *AFL*	E	1597	LU	A	Y		09/90 ▸ 09/93	5020651	**506008**	CR	
1.8 i *AFL*	E	1796	RDA, RQB	M	Y		01/92 ▸ 09/93	5025607	**506284**	N	
1.8 D *AFL*	D	1753	RT	M	Y		09/90 ▸ 09/93	1023645	**506529**	SS	
Puma											
1.7 i 16V *ECV*	E	1679	MHA	M	Y		05/97 ▸	1350461	**506472**	N	
Scorpio (85>92)											
1800 *GAE*	E	1796	REC	M	Y		03/85 ▸ 04/87	5013274	**506858**	N	
2000,2000 i *GAE*	E	1993	NRA, NEL	M	Y		03/85 ▸ 10/89	5013274	**506858**	N	
2000,2000 i *GAE*	E	1993	NEL, NRA	A	Y		03/85 ▸ 10/89	5013274	**506858**	N	
2000,2000 i *GAE, GFK*	E	1998	N9B, N8B	M	Y		11/89 ▸ 01/92	6457409	**506047**	N	
2000,2000 i *GAE*	E	1998	N8B, N9B	A	Y		11/89 ▸ 01/92	6457409	**506047**	N	
2800 i	E	2792	PRE	M	Y		03/85 ▸ 10/86	5011846	**506158**	N	
2800 i	E	2792	PRE	A	Y		03/85 ▸ 10/86	5011846	**506158**	N	
2500 D	D	2499	STR	M	Y		11/85 ▸ 1990	5024638	**506170**	N	
2500 TD	D	2499	SFA	M	Y		06/88 ▸ 01/92	5019394	**506088**	N	
Scorpio (92>94)											
2.5 TD *GNM*	D	2499	SFA	M	Y		02/92 ▸ 09/93	5019394	**506088**	N	
Scorpio (94>98)											
2.0 i,2.0 i 16V *GFR, GNR*	E	1998	N3A, NSD, NSE	M	Y		10/94 ▸	7087382	**506047**	N	
2.0 i 16V *GFR, GNR*	E	1998	N3A	A	Y		10/94 ▸	7087382	**506047**	N	
2.3 i 16V *GFR, GNR*	E	2295	Y5A	M	Y		05/96 ▸	7087382	**506047**	N	
2.3 i 16V *GFR, GNR*	E	2295	Y5A	A	Y		05/96 ▸	7087382	**506047**	N	
2.5 TD *GFR, GNR*	D	2500	SCC	M	Y		10/94 ▸ 09/96	7072641	**506673**	N	506281
2.5 TD *GFR, GNR*	D	2500	SCD	M	Y		09/96 ▸	1032940	**506692**	N	506589
Sierra (82>86)											
1.3	E	1294	JCT	M	Y		08/82 ▸ 1985	5011864	**506009**	N	
1.3	E	1294	JCT	M	Y		08/82 ▸ 1985	5013274	**506858**	N	
1.6,1600	E	1593	LCT, LCS	M	Y		08/82 ▸ 1986	5013274	**506858**	N	
1.6,1600	E	1593	LCT, LCS	M	Y		08/82 ▸ 1986	5011864	**506009**	N	
1.6	E	1593	LCT	A	Y		08/82 ▸ 1984	5011864	**506009**	N	
1.6	E	1593	LCT	A	Y		08/82 ▸ 1984	5013274	**506858**	N	
1600	E	1597	LSD	M	Y		10/84 ▸ 12/86	5013274	**506858**	N	
1600	E	1597	LSD	M	Y		10/84 ▸ 12/86	5011864	**506009**	N	
1.6	E	1597	LSE	A	Y		10/84 ▸ 1986	5011864	**506009**	N	
1.6	E	1597	LSE	A	Y		10/84 ▸ 1986	5013274	**506858**	N	
1.6,1600	E	1597	LSD		Y		01/84 ▸ 12/86	5011864	**506009**	N	
1.6,1600	E	1597	LSD		Y		01/84 ▸ 12/86	5013274	**506858**	N	
1.8,1800	E	1796	REB, RED	M	Y		10/84 ▸ 12/86	5013274	**506858**	N	
1.8,1800	E	1796	RED, REB	M	Y		10/84 ▸ 12/86	5011864	**506009**	N	
1800	E	1796	REB	A	Y		10/84 ▸ 12/86	5011864	**506009**	N	
1800	E	1796	REB	A	Y		10/84 ▸ 12/86	5013274	**506858**	N	
2.0,2000	E	1993	NET	M	Y		08/82 ▸ 12/86	5013274	**506858**	N	
2.0,2000 10842 ▸	E	1993	NET	M	Y		08/82 ▸ 12/86	5011864	**506009**	N	
2.0,2.0 i	E	1993	NET, NRB	A	Y		08/82 ▸ 12/86	5013274	**506858**	N	

• **New** Nouveau **Nuevo** Novo **Nuovo** Nieuw **Neu** Yeni Новый Nou

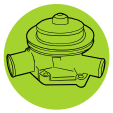

			cc					OE	Valeo			
FORD (.../...)												
Sierra (82>86) (.../...)												
2.0,2.0 i	E	1993	NET, NRB	A	Y		08/82 ▸ 12/86	5011864	**506009**	N		
2.0,2.0 i,2000 i	E	1993	N5, NRB, NET		Y		08/82 ▸ 1987	5013274	**506858**	N		
2.0,2.0 i,2000 i	E	1993	NRB, NET		Y		08/82 ▸ 12/86	5011864	**506009**	N		
2.0	E	1998	NYT	M	Y		10/84 ▸ 1986	5011846	**506158**	N		
2.3,2300	E	2294	YY	A	Y		10/84 ▸ 1986	5011846	**506158**	N		
2.3,2300	E	2294	YY		Y		10/84 ▸ 1986	5011846	**506158**	N		
2.8,2.8 i	E	2792	PR7, PR6, PRG	M	Y		10/84 ▸ 1986	5011846	**506158**	N		
2.3 D,2300 D	D	2304	YTT	M	Y		10/82 ▸ 12/86	5024638	**506170**	N		
Sierra (87>93)												
1.6	E	1597	LSE	M	Y		01/87 ▸ 1993	5013274	**506858**	N		
1.6	E	1597	LSE	M	Y		01/87 ▸ 1993	5011864	**506009**	N		
1.8	E	1769	R2A	M	Y		07/88 ▸ 1993	5011864	**506009**	N		
1.8	E	1769	R2A	M	Y		07/88 ▸ 1993	5013274	**506858**	N		
1.8	E	1769	R2A	A	Y		07/88 ▸ 1993	5011864	**506009**	N		
1.8	E	1769	R2A	A	Y		07/88 ▸ 1993	5013274	**506858**	N		
1.8	E	1796	RED	M	Y		01/87 ▸ 1993	5011864	**506009**	N		
1.8	E	1796	RED	M	Y		01/87 ▸ 1993	5013274	**506858**	N		
1.8	E	1796	RED	A	Y		01/87 ▸ 1989	5011864	**506009**	N		
1.8	E	1796	RED	A	Y		01/87 ▸ 1989	5013274	**506858**	N		
2.0,2.0 i	E	1993	NES, N4A	M	Y		01/87 ▸ 1990	5011864	**506009**	N		
2.0,2.0 i	E	1993	NES, N4A, N5	M	Y		01/87 ▸ 1990	5013274	**506858**	N		
2.0,2.0 i	E	1993	NES, N4A	A	Y		01/87 ▸ 1990	5011864	**506009**	N		
2.0,2.0 i	E	1993	NES, N4A	A	Y		01/87 ▸ 1990	5013274	**506858**	N		
2.0,2.0 i	E	1998	N9A, N8A, N9C	M	Y		07/88 ▸ 1993	6457409	**506047**	N		
2.0 i	E	1998	N9A	A	Y		07/88 ▸ 1993	6457409	**506047**	N		
2.8 i,2800 i	E	2792	PR6, PR7, PRG	M	Y		03/86 ▸ 1993	5011846	**506158**	N		
1.8 TD	D	1753	RFB, RFA	M	Y		01/90 ▸ 1993	5020713	**506642**	N		
2.3 D	D	2304	YTR	M	Y		01/87 ▸ 1990	5024638	**506170**	N		
S-Max												
2.0 i 16V	E	1999	2.0 DURATEC HE	M	Y		04/06 ▸	1434347	**506694**	N		
2.5 i Turbo 20V	E	2521	2.5 DURATEC	M	Y		04/06 ▸ 06/10	1388504	**506325**	CR		
1.8 TDCi	D	1753	1.8 TCD LYNX, 1.8 TC LYNX	M	Y		04/06 ▸	1131878	**506641**	N		
2.0 TDCi 16V	D	1997	2.0TDCIDURATORQ	A	Y		03/07 ▸	1232499	**506719**	CR		
2.0 TDCi 16V	D	1997	2.0 DURATORQ,2.0TDCIDURATORQ	M	Y		04/06 ▸	1232499	**506719**	CR		
FORD												
Courrier (91>96)												
1.3,1.3 i	E	1299	JBC, J6B	M	Y		08/91 ▸ 09/96	6683522	**506127**	N		
1.8 D	D	1753	RTD, RTC	M	Y		08/91 ▸ 09/96	1023645	**506529**	SS		
Courrier (96>)												
1.3 i *J3SA, J5SJ4C*	E	1299	J4C	M	Y		10/96 ▸	1020567	**506581**	N		
1.6 i *J3S*	E	1596	ZL16	M	Y		07/99 ▸	1317021	**506284**	N		
1.8 D *J3SC, J5SRTJ*	D	1753	RTJ	M	Y		10/96 ▸	1020988	**506529**	SS		
P100 Pick-up												
2.0 *PAA/AA/AB, PAB/AA/AB, PAC/AA/AB PAD/AA/AB*	E	1993	NAE	M	Y		01/88 ▸	5013267	**506009**	N		
1.8 TD *PAA/BA/BB, PAB/BA/BB, PAC BA/BB, PAD/BA/BB*	D	1753	RFA	M	Y		02/89 ▸	5020713	**506642**	N		
Tourneo Connect (2002>2006)												
1.8 TDCi,1.8 TDdi	D	1753	D18TCI, D18DI	M	Y		05/02 ▸	1131878	**506641**	N		
Transit (78>85)												
1.6 *VAA/KS/VS, VFAZ, VCA/KS/VS*	E	1593	LAT	M	Y		01/78 ▸ 10/85	6065711	**506858**	N		
1.6 *VAA/KS/VS, VFAZ, VCA/KS/VS*	E	1593	LAT	M	Y		01/78 ▸ 10/85	5013267	**506009**	N		
2.0 *VFL/KL/KS/VS/Z, VJL/KS/VS/Z, VML/KL VL/Z, VPL/KL/VL, VUL/KL/VL*	E	1993	NAV	M	Y		01/78 ▸ 12/85	6065711	**506858**	N		

• **New** Nouveau **Nuevo** Novo **Nuovo** Nieuw **Neu** Yeni Новый Nou

Valeo

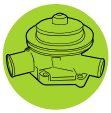

		Type Ctr.		cc						OE	Valeo		
FORD (.../...)												
Transit (78>85) (.../...)												
2.0	*VFL/KL/KS/VS/Z, VJL/KS/VS/Z, VML/KL VL/Z, VPL/KL/VL, VUL/KL/VL*	E	1993	NAV	M	Y		01/78 ▸ 12/85	5013267	**506009**	N	
Transit (86>91)												
1.6	*TBAA, TBCA, TAA/A*	E	1593	LAT	M	Y		10/85 ▸ 12/91	5013267	**506009**	N	
2.0,2.0 i	*TBCB, TDAB, TDFB, TEAB TBA/B, TFAB, TGAB, TJBB TEB/B/E*	E	1993	NAT, N6T	M	Y		10/85 ▸ 12/91	5013267	**506009**	N	
2.5 D		D	2496	4AB, 4CA, 4BC	M	Y		11/85 ▸ 12/91	5024545	**506155**	N	
Transit (92>95)												
2.5 D,2.5 TD	*EBB/CAS/CDS/CFS/EAS/EDS EFS, ECACAS, EBD/CBS/CDS EBS, EDDEMS, EDB/CAS/EAS EEA/EMS/FMS, EEB/EAS/EDS FAS/FDS, EGCCAS, EFB/CAL EAL, EHEFAL, EHB/CAL/EAL EML/ENL/FAL/FML/FNL, EJB EAL/EME/EML/ENE/FAL/FME FML/FNE*	D	2496	4EA, 4BC, 4DA, 4GA	M	Y		08/91 ▸ 08/94	5024545	**506155**	N	
Transit (95>99)												
2.0 i		E	1998	NSF, NSG	M	Y		09/94 ▸ 12/99	7087382	**506047**	N	
2.5 D,2.5 TD		D	2496	4GE, 4EC, 4FD, 4HB, 4FC, 4EB 4GA, 4ED, 4GD, 4GB, 4HC, 4GC 4HA, 4FB, 4FA	M	Y		09/94 ▸ 12/99	1233218	**506155**	N	
2.5 TD		D	2496	4GD, 4GB, 4GA, 4GE, 4GC	A	Y		09/94 ▸ 12/99	1233218	**506155**	N	
Transit (2000>)												
2.3 i GPL 16V		G	2295	E5FC	M	Y		01/00 ▸	7087382	**506047**	N	
2.3 i 16V		E	2295	E5FA	M	Y		01/00 ▸	7087382	**506047**	N	
2.0 TDci,2.0 TDdi	*FAE/YAB/YD3, FAF/YAB/YD3 FM, FAG/YAB/YD3*	D	1998	F3FA, D3FA-E3, FIFA, ABFA	M	Y		08/00 ▸	1347102	**506693**	N	
2.4 TDCi,2.4 TDI,2.4 TDdi	*FBY, FA, F/, FAB/Y/YD2 YD4/YF4, FAC/Y/YD2/YD4 YF4, FD, FM, FAD/Y/YD2 YD4/YF4, FMA/Y/YD2/YD4 YF4, FMB/Y/YD2/YD4/YF4 FMC//Y/YD2/YD4/YF4, FMD Y/YD2/YD4/YF4, FNB/J/JD2 JD4/JF4, FNC/J/JD2/JD4 JF4, FND/J/JD2/JD4/JF4*	D	2402	F4FA, D2FA, D4FA, D0FE, H9FA FXFA	M	N		01/00 ▸	1385827	**506789**	vvv	
Transit (2006>)												
2.2 TDCi,2.2 TDCi 110 2.2 TDCi 115,2.2 TDCi 130 2.2 TDCi 140,2.2 TDCi 85	*FAE/6P8/6QV/6QW, FMF6QV FMG6QV, FAF/6P8/6QV/6QW*	D	2198	2.2 DURATORQ,2.2DURATORQTDCI P8FA,QVFA,QWFA,QWFB	M	Y		04/06 ▸	1381796	**506955**	N	
Transit Connect (2002>2006)												
1.8 TDCi,1.8 TDdi	*PT2/BHP/HCP, PU2/BHP/HCP*	D	1753	D18DI, D18TCI	M	Y		05/02 ▸	1131878	**506641**	N	
FORD USA												
Probe												
2.0 i 16V	*T20A9*	E	1991	FS	M	Y		10/93 ▸ 12/97	3396917	**506536**	N	
2.5 i V6 24V	*T22B9*	E	2497	99B	M	Y		10/92 ▸ 12/97	3396916	**506544**	N	
GALLOPER												
Exceed												
2.5 TDi	*V44, V24*	D	2476	D4BH-105	M	Y		03/98 ▸	2510042541	**506736**	N	

• **New** Nouveau **Nuevo** Novo **Nuovo** Nieuw **Neu** Yeni Новый Nou

		Type Ctr.		cc						OE	Valeo		
GALLOPER (.../...)													
Galloper													
2.5 TDi	*V44, V24*	D		2476	D4BH-105	M	Y		02/98 ▸	2510042541	**506736**	N	
Santamo													
2.0 i,2.0 i 16V	*N33, N43*	E		1997	I4-DOHC, I4-SOHC	M	Y		11/98 ▸	2510033132	**506617**	N	
HONDA													
Accord II (83>85)													
1600	*AC/532/533/542/543*	E		1598	EZ	M	Y		09/83 ▸ 09/85	19200PD2415	**506425**	N	
1600	*AC/733/743*	E		1598	EZ	A	Y		09/83 ▸ 09/85	19200PD2415	**506425**	N	
1800	*AD/533/543/544*	E		1829	ET1	M	Y		09/83 ▸ 09/85	19210PD6305	**506425**	N	
1800	*AD/733/743/744*	E		1829	ET1	A	Y		09/83 ▸ 09/85	19210PD6305	**506425**	N	
Accord IV (89>93)													
1.8	*CB/152/153*	E		1849	F18A2	M	Y		09/89 ▸ 1993	19200P0BA01	**506321**	CR	
2.0,2.0 i 16V	*CB/352/353/354*	E		1997	F20A4, F20A8, F20A2, F20A5 F20A3	M	Y		09/89 ▸ 1993	19200P0BA01	**506321**	CR	
2.0,2.0 i 16V	*CB/362/363/364*	E		1997	F20A4, F20A8, F20A5, F20A3 F20A2	A	Y		09/89 ▸ 1993	19200P0BA01	**506321**	CR	
2.2 i 16V	*CB755*	E		2156	F22A3	M	Y		09/89 ▸ 1993	19200P0BA01	**506321**	CR	
2.2 i 16V	*CB765*	E		2156	F22A3	A	Y		09/89 ▸ 1993	19200P0BA01	**506321**	CR	
Accord V (93>95)													
1.8 i	*CC/752/753*	E		1849	F18A3	M	Y		07/93 ▸ 06/95	19200P0A003	**506321**	CR	
2.0 i	*CC/751/754/755/756/757*	E		1997	F20Z1, F20Z2	M	Y		03/93 ▸ 06/95	19200P0BA01	**506321**	CR	
2.0 i	*CC/765/766/767*	E		1997	F20Z1	A	Y		03/93 ▸ 06/95	19200P0BA01	**506321**	CR	
2.3 i	*CC758*	E		2259	H23A3	M	Y		07/93 ▸ 06/95	19200P14A00	**506322**	CR	
2.3 i	*CC768*	E		2259	H23A3	A	Y		07/93 ▸ 06/95	19200P14A00	**506322**	CR	
Accord VI (CE/CF) (95>98)													
1.8 i	*CE/751/752/753/754/755/756/757*	E		1849	F18A3, F18A4	M	Y		07/95 ▸	19200P0A003	**506321**	CR	
1.8 i	*CE/761/765/766*	E		1849	F18A4, F18A3	A	Y		07/95 ▸	19200P0A003	**506321**	CR	
2.0 i	*CE/854/855/856/857/858*	E		1997	F20Z1	M	Y		07/95 ▸	19200P0A003	**506321**	CR	
2.0 i	*CE/865/866/867/868*	E		1997	F20Z1	A	Y		07/95 ▸	19200P0A003	**506321**	CR	
2.2 i	*CE/956/957/958*	E		2156	F22Z2	M	Y		07/95 ▸	19200P0A003	**506321**	CR	
2.2 i	*CE/966/968*	E		2156	F22Z2	A	Y		07/95 ▸	19200P0A003	**506321**	CR	
2.0 TDi	*CF/152/153/154*	D		1994	20T2N	M	Y		03/96 ▸	19200P5TG01	**506320**	N	
Accord VII (98>2003)													
2.2 i	*CH159*	E		2157	H22A7	M	Y		09/98 ▸ 01/03	19200P13003	**506443**	CR	
2.0 TD	*CH/252/254/257/258/872 873/874/875/878/879*	D		1994	20T2N	M	Y		09/98 ▸ 09/00	19200P5TG01	**506320**	N	
Accord VIII (2003>)													
2.0 i	*CL/751/752/753/754/755/758/759, CM 171/172/173/174/175/176/177/178*	E		1998	K20A6	M	Y		02/03 ▸	19200RBB003	**506810**	SS	
2.0 i	*CL/762/763/764/765/768/769, CM/181 182/183/184/185/186/187/188*	E		1998	K20A6	A	Y		02/03 ▸	19200RBB003	**506810**	SS	
2.4 i		E		2354	K24A	A	Y		02/03 ▸	19200RAAA01	**506925**	SS	
2.2 i-CDTi 16V	*CN/152/155/272/273/274 275*	D		2204	N22A1	M	Y		02/04 ▸	19200RBDE01	**506878**	N	
Accord Aerodeck (90>93)													
2.0 i 16V	*CC/974/975*	E		1997	F20Z3	M	Y		07/92 ▸ 08/93	19200P0BA01	**506321**	CR	
2.2 i 16V	*CB/874/875/974/975*	E		2156	F22A7, F22A6	M	Y		07/90 ▸ 08/93	19200P0BA01	**506321**	CR	
2.2 i 16V	*CB/884/885/984/985*	E		2156	F22A8, F22A6	A	Y		07/90 ▸ 08/93	19200P0BA01	**506321**	CR	
Accord Aerodeck (93>97)													
2.0 i	*CE/272/273/274/275/276/277/278*	E		1997	F20B3	M	Y		09/93 ▸	19200P0BA01	**506321**	CR	
2.0 i	*CE/282/283/285/286/287/288*	E		1997	F20B3	A	Y		09/93 ▸	19200P0BA01	**506321**	CR	
2.2 i	*CE/171/174/175/176/177/178*	E		2156	F22B5, F22B1, F22B4	M	Y		09/93 ▸	19200P0BA01	**506321**	CR	

• **New** Nouveau **Nuevo** Novo **Nuovo** Nieuw **Neu** Yeni Новый Nou

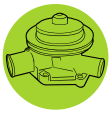

HONDA (.../...)

Accord Aerodeck (93>97) (.../...)

2.2 i	*CE/181/184/185/186/187/188*	E	2156	F22B1, F22B5, F22B4	A	Y		09/93 ▸	19200P0BA01	**506321**	CR	

Accord coupé (91>93)

2.0 i	*CC/114/115*	E	1997	F20A7	M	Y		07/91 ▸ 08/93	19200P0BA01	**506321**	CR	
2.0 i	*CC/124/125*	E	1997	F20A7	A	Y		07/91 ▸ 08/93	19200P0BA01	**506321**	CR	

Accord coupé (93>97)

2.0 i	*CD/914/915/916*	E	1997	F20B3	M	Y		09/93 ▸	19200P0BA01	**506321**	CR	
2.0 i	*CD/924/925/926*	E	1997	F20B3	A	Y		09/93 ▸	19200P0BA01	**506321**	CR	
2.2 i	*CD/713/714/715/716*	E	2156	F22B4, F22B5	M	Y		09/93 ▸	19200P0BA01	**506321**	CR	
2.2 i	*CD/723/724/725/726*	E	2156	F22B4, F22B5	A	Y		09/93 ▸	19200P0BA01	**506321**	CR	

Civic I (72>83)

1200	*SFA, SB/A/C/E*	E	1169	EB1	M	Y		09/75 ▸ 07/79	19110634405	**506418**	V	
1200	*SBD, SFB*	E	1169	EB1	A	Y		09/75 ▸ 07/79	19110634405	**506418**	V	
1300	*SP, SS552, SL/431/532, WC/452/552*	E	1335	EN1	M	Y		08/79 ▸ 1983	19200PA1405	**506033**	N	
1300	*SS252, WC252, SL/232*	E	1335	EN1	A	Y		08/79 ▸ 1983	19200PA1405	**506033**	N	

Civic II (83>87)

1300	*AG532, AJ542*	E	1342	EV2	M	Y		09/83 ▸ 08/87	19200PE0515	**506028**	CR	
1300	*AG332*	E	1342	EV2	A	Y		09/83 ▸ 08/87	19200PE0515	**506028**	CR	
1500,1500 i	*AK543, AH/532/533*	E	1488	EW2, EW3	M	Y		09/83 ▸ 08/87	19200PE0515	**506028**	CR	
1500	*AK343, AH/333/733*	E	1488	EW2	A	Y		09/83 ▸ 08/87	19200PE0515	**506028**	CR	

Civic III (87>91)

1.2	*EC732*	E	1238	D12B1	M	Y		09/87 ▸ 1991	19200P01004	**506045**	CR	
1.3	*EC832*	E	1343	D13B2, D13B1	M	Y		09/87 ▸ 1991	19200P01004	**506045**	CR	
1.3	*ED842*	E	1343	D13B1	A	Y		09/87 ▸ 1991	19200P01004	**506045**	CR	
1.4	*EC932*	E	1396	D14A1	M	Y		09/87 ▸ 1991	19200P01004	**506045**	CR	
1.4	*EC942*	E	1396	D14A1	A	Y		09/87 ▸ 1991	19200P01004	**506045**	CR	
1.5 i	*ED/634/635*	E	1493	D15B2, D15B1	M	Y		09/87 ▸ 1991	19200P01004	**506045**	CR	
1.5 i	*ED/644/645*	E	1493	D15B2, D15B1	A	Y		09/87 ▸ 1991	19200P01004	**506045**	CR	
1.6 i 16V	*ED/736/737*	E	1590	D16A9, D16A6, D16Z2	M	Y		09/87 ▸ 1991	19200P01004	**506045**	CR	
1.6 i 16V	*EE938*	E	1595	B16A1	M	Y		08/89 ▸ 1991	19200P01004	**506045**	CR	

Civic IV (91>95)

1.3	*EG/332/333*	E	1343	D13B2	M	Y		09/91 ▸ 09/95	19200P01004	**506045**	CR	
1.5 i	*EG/434/854/855*	E	1493	D15B2	M	Y		09/91 ▸ 09/95	19200P01004	**506045**	CR	
1.5 i	*EG/435/436/856*	E	1493	D15B2, D15Z1	M	Y		09/91 ▸ 09/95	19200P08004	**506441**	CR	
1.5 i	*EG/444/864/865*	E	1493	D15B2	A	Y		09/91 ▸ 09/95	19200P01004	**506045**	CR	
1.5 i	*EG445*	E	1493	D15B2	A	Y		09/91 ▸ 09/95	19200P08004	**506441**	CR	
1.6 i	*EG538*	E	1590	D16Z7, D16Z6	M	Y		09/91 ▸ 09/95	19200P30003	**506321**	CR	
1.6 i	*EH/158/958*	E	1590	D16Z7, D16Z6	M	Y		09/91 ▸ 09/95	19200P08004	**506441**	CR	
1.6 i 16V	*EH954*	E	1590	D16A7	M	Y		09/93 ▸ 09/95	19200P01004	**506045**	CR	
1.6 i	*EH/168/968*	E	1590	D16Z6, D16Z7	A	Y		09/91 ▸ 09/95	19200P08004	**506441**	CR	
1.6 i	*EG639*	E	1595	B16A2	M	Y		09/91 ▸ 09/95	19200P08004	**506441**	CR	
1.6 i	*EG959*	E	1595	B16A2	M	Y		09/91 ▸ 09/95	19200P30003	**506321**	CR	

Civic V (MA/MB) (95>2001)

1.4 i	*MA/871/872/873/874/875/876/877*	E	1396	D14A2, D14A5	M	Y		01/95 ▸ 06/96	19200P1JE02	**506045**	CR	
1.4 i	*MB/273/274/275/276*	E	1396	D14A8, D14A7	M	Y		07/96 ▸ 03/01	19200P2AA02	**506661**	CR	
1.4 i	*MA/882/883/884/885/886*	E	1396	D14A2	A	Y		01/95 ▸ 06/96	19200P1JE02	**506045**	CR	
1.4 i	*MB/285/286*	E	1396	D14A8	A	Y		07/96 ▸ 03/01	19200P2AA02	**506661**	CR	
1.5 i	*MA/971/972/973/974*	E	1493	D15Z3	M	Y		01/95 ▸ 06/95	19200P08003	**506441**	CR	
1.5 i	*MB/373/374*	E	1493	D15Z8	M	Y		07/96 ▸ 03/01	19200P2AA02	**506661**	CR	
1.6 i	*MB/176/177*	E	1590	D16Y2	M	Y		01/95 ▸ 06/95	19200P08003	**506441**	CR	
1.6 i	*MB/172/173/174/175*	E	1590	D16Y2, D16Y3	M	Y		01/95 ▸ 06/96	19200P1JE02	**506045**	CR	
1.6 i	*MB/182/184/185*	E	1590	D16Y3	A	Y		01/95 ▸ 06/96	19200P01003	**506045**	CR	
1.6 i	*MB485*	E	1590	D16Y3	A	Y		07/96 ▸ 03/01	19200P2AA02	**506661**	CR	
1.6 i	*MB/476/477/485*	E	1595	D16B2	M	Y		07/96 ▸ 03/01	19200P2AA02	**506661**	CR	
1.6 i	*MB/486/487*	E	1595	D16B2	A	Y		07/96 ▸ 03/01	19200P2AA02	**506661**	CR	
1.8 i	*MB673*	E	1797	D18C4	M	Y	22 teeth	07/96 ▸ 03/01	19200P72013	**506680**	CR	

• **New** Nouveau **Nuevo** Novo **Nuovo** Nieuw **Neu** Yeni Новый Nou

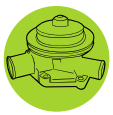

			CC						OE	Valeo		
HONDA (.../...)												
Civic V (MA/MB) (95>2001) (.../...)												
2.0 TDi	*MB773*	D	1994	20T2N12	M	Y		07/96 ▸ 03/01	19200P5TG01	**506320**	N	
Civic V (EJ*) (96>2000)												
1.6 i	*EJ/611/612/613/614/616/617/618/619 715/716*	E	1590	D16Y7, D16Y6	M	Y		03/96 ▸	19200P2AA02	**506661**	CR	
1.6 i	*EJ/621/622/623/624/626/627/628/629 725/726*	E	1590	D16Y6, D16Y7	A	Y		03/96 ▸ 03/00	19200P2AA02	**506661**	CR	
1.6 i	*EJ/810/811/814/815/817/818/819*	E	1590	D16Y8	M	Y	22 teeth	03/96 ▸ 03/00	19200P72013	**506680**	CR	
1.6 i	*EJ/820/821/824/825/827/829*	E	1590	D16Y8	A	Y	22 teeth	03/96 ▸ 03/00	19200P72013	**506680**	CR	
Civic V (EJ/EK) (95>2001)												
1.4 i	*EJ/933/934/954*	E	1396	D14A4, D14A3	M	Y		10/95 ▸	19200P2AA02	**506661**	CR	
1.4 i	*EJ/943/944/964*	E	1396	D14A4	A	Y		10/95 ▸	19200P2AA02	**506661**	CR	
1.5 i	*EK/336/356*	E	1493	D15Z6	M	Y		10/95 ▸	19200P2AA02	**506661**	CR	
1.5 i	*EK/346/366*	E	1493	D15Z6	A	Y		10/95 ▸	19200P2AA02	**506661**	CR	
1.6 i	*EK157*	E	1590	D16Y8	M	Y		10/95 ▸	19200P2AA02	**506661**	CR	
1.6 i	*EK/146/167*	E	1590	D16Y8, D16Y5	A	Y		10/95 ▸	19200P2AA02	**506661**	CR	
1.6 i	*EM1, EK/436/456*	E	1595	B16A-155,B16A-185,B16A2	M	Y	22 teeth	10/95 ▸ 03/01	19200P72013	**506680**	CR	
1.6 i		E	1595	D16Y6, D16Y8, B16A2		Y	22 teeth	11/98 ▸ 10/00	19200PT003	**506943**	CR	
Civic (EP) (2001>)												
1.4 i 16V,1.4 i Sport 16V	*ES453, EP/132/134/135/136 137, EU/572/574/771/772 774/776*	E	1396	D14Z6, D14Z5	M	Y	19 teeth	04/01 ▸	19200PLMA01	**506811**	CR	
1.4 i 16V	*ES463, EP/145/146, EU/584 784/786*	E	1396	D14Z6, D14Z5	A	Y	19 teeth	04/01 ▸	19200PLMA01	**506811**	CR	
1.6 i VTEC 16V	*EP/232/234/235/236/237 238/239, ES/553/554/555 556/557/559, EU/672/674 677/872/874/877*	E	1590	D16W7, D16V1	M	Y	19 teeth	04/01 ▸	19200PLMA01	**506811**	CR	
1.6 i VTEC 16V	*EP/242/244/245/246/247 248, ES/563/564/565/566 567/569, EU/682/684/687 882/884/887*	E	1590	D16V1, D16W7	A	Y	19 teeth	04/01 ▸	19200PLMA01	**506811**	CR	
1.7 i 16V,1.7 i VTEC 16V	*EM/213/215/218/219*	E	1668	D17A9, D17A8	M	Y	19 teeth	04/01 ▸	19200PLMA01	**506811**	CR	
1.7 i 16V,1.7 i VTEC 16V	*EM/223/225/228/229*	E	1668	D17A9, D17A8	A	Y	19 teeth	04/01 ▸	19200PLMA01	**506811**	CR	
2.0 i VTEC 16V	*EV/170/179*	E	1998	K20A3	M	Y		09/03 ▸	19200PNLE01	**506810**	SS	
Civic VII (FD)												
1.4		E	1339	L13A7	M	Y		01/06 ▸	19200-PWA-003	**506812**	N	
Civic (FK/FD) (2006>)												
1.6 i-VTEC 16V	*FD/452/454*	E	1595	R16A1	M	Y		01/06 ▸ 06/09	19200RNAA01	**506895**	N	
1.6 i-VTEC 16V	*FD/462/464*	E	1595	R16A1	A	Y		01/06 ▸ 06/09	19200RNAA01	**506895**	N	
1.8 i 16V,1.8 i-VTEC 16V	*FD/152/154/157, FK/276 278, FN/132/134/136*	E	1799	R18A1	M	Y		01/06 ▸	19200RNAA01	**506895**	N	
1.8 i 16V,1.8 i-VTEC 16V	*FK288, FD/162/164/167, FN 142/144/146*	E	1799	R18A1	A	Y		01/06 ▸	19200RNAA01	**506895**	N	
2.2 i-CTDi 16V 2.2 iCDTi 16V	*FK/374/376/378, FN/332 334/336*	D	2204	N22A2, N22A2/F, N22A1	M	Y		01/06 ▸	19200RSRE02	**506878**	N	
Civic Aerodeck (97>)												
1.4 i	*MB/873/874/875/876/877/878*	E	1396	D14A7, D14A8	M	Y		09/97 ▸	19200P2AA01	**506661**	CR	
1.4 i	*MB/885/887*	E	1396	D14A7, D14A8	A	Y		09/97 ▸	19200P2AA01	**506661**	CR	
1.5 i VTEC	*MB/974/975/976*	E	1493	D15Z8	M	Y		09/97 ▸	19200P2AA01	**506661**	CR	
1.6 i	*MC175*	E	1590	D16W4	M	Y		09/97 ▸	19200P2AA01	**506661**	CR	
1.6 i	*MC184*	E	1590	D16W3	A	Y		09/97 ▸	19200P2AA01	**506661**	CR	
1.6 i	*MC176*	E	1595	D16B2	M	Y		09/97 ▸	19200P2AA01	**506661**	CR	
1.6 i	*MC186*	E	1595	D16B2	A	Y		09/97 ▸	19200P2AA01	**506661**	CR	
1.8 i	*MC274*	E	1797	B18C4	M	Y	22 teeth	09/97 ▸ 03/01	19200P72013	**506680**	CR	
Civic Shuttle (83>87)												
1500	*AG652, AN552*	E	1488	EW2C, EW2	M	Y		09/83 ▸ 08/87	19200PE0515	**506028**	CR	

• **New** Nouveau **Nuevo** Novo **Nuovo** Nieuw **Neu** Yeni Новый Nou

Valeo

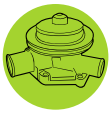

HONDA (.../...)

Civic Shuttle (83>87) (.../...)

1500 *AN/352/752*	E	1488	EW2C	A	Y		09/83 ▸ 08/87	19200PE0515	**506028**	CR	

Civic Shuttle (87>)

1.4 *EE172*	E	1396	D14A1	M	Y		11/87 ▸	19200P01004	**506045**	CR	
1.4 *EE182*	E	1396	D14A1	A	Y		11/87 ▸	19200P01004	**506045**	CR	
1.5 i *EE275*	E	1493	D15B2	M	Y		11/87 ▸	19200P01004	**506045**	CR	
1.5 i *EE285*	E	1493	D15B2	A	Y		11/87 ▸	19200P01004	**506045**	CR	
1.6 i 16V *EE476*	E	1590	D16Z2, D16A6, D16A7	M	Y		09/87 ▸	19200P01004	**506045**	CR	
1.6 i 16V *EE486*	E	1590	D16Z2	A	Y		08/89 ▸	19200P01003	**506045**	CR	

Concerto

1.4 *HW/HLL/HWL* E001272 ▸ E011755	E	1396	D14A1	M	Y		10/89 ▸ 08/91	19200PM3014	**506045**	CR	
1.4 *HW/HWL/LLZ* E001272 ▸ E011755	E	1396	D14A1	A	Y		10/89 ▸ 08/91	19200PM3014	**506045**	CR	
1.5 i *HW/HWP/LPT* E00076 ▸	E	1493	D15B2	M	Y		10/89 ▸ 09/95	19200PM3014	**506045**	CR	
1.5 i *HW/HWP/LPV* E00076 ▸	E	1493	D15B2	A	Y		10/89 ▸ 09/95	19200PM3014	**506045**	CR	
1.6,1.6 i 16V *HW/MLW/MWW/WLN/WLU/WWN* E002682 ▸ E003348 *WWU/YLM/YLW/YWM/YWW/ZLN ZWN*	E	1590	D16Z2, D16A8, D16A9, D16Z1	M	Y		07/88 ▸	19200PM3014	**506045**	CR	
1.6,1.6 i 16V *HW/LYW/MLW/MWW/WLN/WLU* E002682 ▸ E003348 *WWN/WWU/YLM/YLW/YWM/YWW ZLN/ZWN*	E	1590	D16A8, D16Z4, D16Z1, D16A9 D16Z2	A	Y		10/89 ▸	19200PM3014	**506045**	CR	
1.8 TD *HWYWX*	D	1769	10CV2L	M	Y		07/94 ▸ 1996	19200P01004	**506045**	CR	

CR-V (97>2002)

2.0 i *RD/172/173/174/175/176/375*	E	1973	B20B,B20Z1,B20Z3	M	Y	19 teeth	01/99 ▸ 02/02	19200P75003	**506894**	CR	
2.0 i *RD/184/185/186/385*	E	1973	B20B,B20B3,B20Z1	A	Y	19 teeth	01/97 ▸ 02/02	19200P75003	**506894**	CR	

CR-V (2002>2006)

2.0 i VTEC 16V *RD/871/872/876/877*	E	1998	K20A4	M	Y		03/02 ▸ 12/06	19200PNLE01	**506810**	SS	
2.0 i VTEC 16V *RD/881/882/886/887*	E	1998	K20A4	A	Y		03/02 ▸ 12/06	19200PNLE01	**506810**	SS	

CR-V (RE) (2006>)

2.2 i-CTDi 16V *RE/672/673/675/677/678*	D	2204	N22A2	M	Y		12/06 ▸	19200RSRE02	**506878**	N	

CRX (EE/ED) (87>92)

1.4 *EE632*	E	1396	D14A1	M	Y		09/89 ▸ 02/92	19200P01004	**506045**	CR	
1.4 *EE642*	E	1396	D14A1	A	Y		09/89 ▸ 02/92	19200P01004	**506045**	CR	
1.5 i *EF610*	E	1493	D15B1	M	Y		09/87 ▸ 07/88	19200P01004	**506045**	CR	
1.6 i 16V *ED/936/937*	E	1590	D16A6, D16A7, D16Z5, D16A9 D16A8	M	Y		09/87 ▸ 02/92	19200P01004	**506045**	CR	
1.6 i 16V *EE838*	E	1595	B16A1	M	Y		08/89 ▸ 02/92	19200P01004	**506045**	CR	

CRX (EG/EH) (92>)

1.6 i *EH/616/618*	E	1590	D16Z6, D16Z7	M	Y		03/92 ▸ 06/95	19200P08004	**506441**	CR	
1.6 i *EH/616/618*	E	1590	D16Y8	M	Y		07/95 ▸	19200P2AA02	**506661**	CR	
1.6 i *EH/626/628*	E	1590	D16Z6, D16Z7	A	Y		03/92 ▸ 06/95	19200P08004	**506441**	CR	
1.6 i *EH628*	E	1590	D16Y8	A	Y		07/95 ▸	19200P2AA02	**506661**	CR	
1.6 i *EG/217/219*	E	1595	B16A2	M	Y	22 teeth	07/94 ▸ 12/98	19200P72013	**506680**	CR	

FR-V (2004>2007)

1.7 i VTEC 16V *BE174*	E	1668	D17A2	M	Y	19 teeth	10/04 ▸ 01/07	19200PLMA01	**506811**	CR	
2.0 i VTEC 16V *BE378*	E	1998	K20A4	M	Y		10/04 ▸ 01/07	19200PNA003	**506810**	SS	
2.2 i-CDTi *BE572*	D	2204	N22A1	M	Y		07/05 ▸ 01/07	19200RBDE01	**506878**	N	

FR-V (2007>)

1.8 i-VTEC 16V *BE/172/174/175/176/178*	E	1799	R18A1	M	Y		02/07 ▸	19200RNAA01	**506895**	N	
1.8 i-VTEC 16V *BE/182/184/185/186/188*	E	1799	R18A1	A	Y		02/07 ▸	19200RNAA01	**506895**	N	
2.2 i-CDTi *BE/572/574/575/576/578*	D	2204	N22A1	M	Y		02/07 ▸	19200RBDE01	**506878**	N	

• **New** Nouveau **Nuevo** Novo **Nuovo** Nieuw **Neu** Yeni Новый Nou

			cc						OE	Valeo		
HONDA (.../...)												
HR-V												
1.6 i 16V	*GH/144/145/244/245/385 386/483/485/486*	E	1590	D16W1	A	Y		10/98 ▸	19200P2AA02	**506661**	CR	
1.6 i 16V,1.6 i VTEC 16V	*GH/134/135/234/235/237 238/375/376/473/475/476 477/478*	E	1590	D16W1, D16W5	M	Y		10/98 ▸	19200P2AA02	**506661**	CR	
Integra (DA) (86>93)												
1.5	*DA472*	E	1493	D15A1	M	Y		03/85 ▸ 11/89	19200PE0515	**506028**	CR	
1.5	*DA482*	E	1493	D15A1	A	Y		03/85 ▸ 11/89	19200PE0515	**506028**	CR	
Integra (DC) (97>)												
1.8 i 16V	*DC231*	E	1797	B18C6	M	Y	22 teeth	11/97 ▸ 08/01	19200P72013	**506680**	CR	
Jazz (GD)												
1.2		E	1243	L12A1	M	Y		03/02 ▸	19200-PWA-003	**506812**	N	
1.4		E	1339	L13A1	M	Y		03/02 ▸	19200-PWA-003	**506812**	N	
Legend (85>90)												
2.5	*HS/SLP/ZLP*	E	2493	C25A1, C25A2	M	Y		11/85 ▸ 09/87	19200PH7003	**506540**	SS	
2.5	*HS/SLP/ZLP*	E	2493	C25A2, C25A1	A	Y		11/85 ▸ 09/87	19200PH7003	**506540**	SS	
2.7	*HS/ELN/ZLN, KA/315/316/454*	E	2675	C27A2, C27A1	M	Y		07/87 ▸ 09/90	19200PH7003	**506540**	SS	
2.7	*HS/SLN, KA/325/326/327/464/467*	E	2675	C27A2, C27A1	A	Y		09/87 ▸ 09/90	19200PH7003	**506540**	SS	
Logo												
1.3 i	*GA/333/335*	E	1343	D13B7	M	Y		12/98 ▸ 04/01	19200P7A003	**506679**	CR	
1.3 i	*GA/343/345*	E	1343	D13B7	A	Y		12/98 ▸ 04/01	19200P7A003	**506679**	CR	
Odyssey												
2.2 i 16V	*RA/181/182*	E	2156	F22B8	A	Y		07/97 ▸	19200P0A003	**506321**	CR	
Prelude II (82>87)												
1.8	*AB/522/523*	E	1829	ET	M	Y		11/82 ▸ 1985	19200PD2415	**506425**	N	
1.8	*AB/722/723*	E	1829	ET	A	Y		11/82 ▸ 1985	19200PD2415	**506425**	N	
Prelude IV (91>96)												
2.0 i 16V 9401931 ▸	*BB314*	E	1997	F20A4	M	Y		10/91 ▸ 1995	19200P0BA01	**506321**	CR	
2.0 i 16V 9401931 ▸	*BB324*	E	1997	F20A4	A	Y		10/91 ▸ 1995	19200P0BA01	**506321**	CR	
2.2 i 16V	*BB/117/118*	E	2157	H22A2	M	Y		07/92 ▸ 09/96	19200P13003	**506443**	CR	
2.3 i 16V	*BB/215/216*	E	2259	H23A2	M	Y		10/91 ▸ 06/94	19200P14A00	**506322**	CR	
2.3 i 16V	*BB/225/226*	E	2259	H23A2	A	Y		10/91 ▸ 06/94	19200P14A00	**506322**	CR	
Prelude IV (96>2001)												
2.0 i 16V	*BB914*	E	1997	F20A4	M	Y		10/96 ▸	19200P0A003	**506321**	CR	
2.0 i 16V	*BB924*	E	1997	F20A4	A	Y		10/96 ▸	19200P0A003	**506321**	CR	
2.2 i	*BB514*	E	2156	F22A2	M	Y		10/96 ▸	19200P0A003	**506321**	CR	
2.2 i	*BB524*	E	2156	F22A2	A	Y		10/96 ▸	19200P0A003	**506321**	CR	
2.2 i VTEC	*BB/614/615/815*	E	2157	H22A5-200	M	Y		10/96 ▸	19200P13003	**506443**	CR	
2.2 i VTEC	*BB/624/825*	E	2157	H22A5-185	A	Y		10/96 ▸	19200P13003	**506443**	CR	
Quintet												
1600	*SU/552/553*	E	1602	EL	M	Y		01/80 ▸ 1984	19200PB2000	**506081**	N	
1600	*SU/352/353*	E	1602	EL	A	Y		01/80 ▸ 1984	19200PB2000	**506081**	N	
Shuttle												
2.2 i 16V	*RA/181/182/183/184/187*	E	2156	F22B8	A	Y		12/94 ▸ 02/98	19200P0A003	**506321**	CR	
Stream												
1.7 i VTEC 16V	*RN/173/174/177/178*	E	1668	D17A2	M	Y	19 teeth	03/01 ▸	19200PLMA01	**506811**	CR	
2.0 i VTEC 16V	*RN/374/375*	E	1998	K20A1	M	Y		03/01 ▸	19200PNA003	**506810**	SS	

• **New** Nouveau **Nuevo** Novo **Nuovo** Nieuw **Neu** Yeni Новый Nou

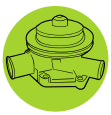

Type Ctr.	cc					OE	Valeo		
HYUNDAI (.../...)									
Atos Prime (.../...)									
1.1 i 12V *MX1AO*	E	1086	G4H46	M	Y		07/04 ▸ 03/08	2510002577	**506897**	N	
1.1 i 12V *MX1AO*	E	1086	G4H46	A	Y		07/04 ▸ 03/08	2510002577	**506897**	N	
Atoz									
1.0 i 12V *AB51G, AC51G*	E	999	G4HC	M	Y		05/98 ▸	2510002501	**506777**	N	
1.0 i 12V *AC51G, AB51G*	E	999	G4HC	A	Y		05/98 ▸	2510002501	**506777**	N	
coupé (2002>)									
1.6 i 16V *GK*	E	1599	G4GRE2	M	Y		01/02 ▸ 12/03	2510026900	**506813**	N	
1.6 i 16V *GK*	E	1599	G4GRE2	M	Y		01/04 ▸ 12/06	2510026902	**506813**	N	
1.6 i 16V *GK*	E	1599	G4GRE2	M	Y		01/04 ▸	2510037102	**506819**	SS	
2.0 i 16V *GK, GKDK*	E	1975	G4GCG-E4, G4GCG-141	M	Y		01/02 ▸	2510023010	**506818**	N	
2.0 i 16V *GK, GKDK*	E	1975	G4GCG-E4, G4GCG-141	A	Y		01/02 ▸	2510023010	**506818**	N	
2.7 i V6 24V *GKFZ*	E	2657	G6BA-G-167	M	Y		01/02 ▸	2510037102	**506819**	SS	
2.7 i V6 24V *GKFZ*	E	2657	G6BA-G-167	A	Y		01/02 ▸	2510037102	**506819**	SS	
Elantra (2000>2007)									
1.6 i,1.6 i 16V *XDAUH, XDA, XDBUH*	E	1599	G4EDG,G4GRE2	M	Y		06/00 ▸ 01/07	2510026900	**506813**	N	
1.6 i,1.6 i 16V *XDB, XDA*	E	1599	G4EDG,G4GRE2	A	Y		06/00 ▸ 01/07	2510026900	**506813**	N	
2.0 CRDi 16V *XDBRM, XDARM*	D	1991	D4-EA	M	Y		01/01 ▸	2510027000	**506814**	CR	
Elantra (2007>)									
1.6 i 16V	E	1591	1.6L-GAMMA	A	Y		01/07 ▸	251002B000	▲**506977**	N	
1.6 CRDi 16V	D	1582	1.6L-U	M	Y		01/07 ▸ 04/08	251002A000	▲**506976**	N	
Excel (89>94)									
1.3,1.3 i *VF3ME, VA3ME, VD3ME*	E	1298	G4DGJA, G4DGJE	M	Y		08/89 ▸ 10/94	2510022012	**506406**	N	
1.5,1.5 i *VA3JE, VD3JE, VF3JE*	E	1468	G4DJJE, G4DJJA	M	Y		08/89 ▸ 10/94	2510022012	**506406**	N	
1.5,1.5 i *VD3JA, VA3JA, VF3JA*	E	1468	G4DJJA, G4DJJE	A	Y		08/89 ▸ 10/94	2510022012	**506406**	N	
Excel (94>)									
1.3 *VD3LE, VA2LE, VD2LE, VF3LE, VA3LE*	E	1341	G4EH62	M	Y		10/97 ▸	2510022012	**506406**	N	
1.3 *VD2LA, VA3LA, VA2LA, VF3LA*	E	1341	G4EH62	A	Y		10/97 ▸	2510022012	**506406**	N	
1.5 12V *VA3NE, VD3NE, VF3NE*	E	1495	G4EK-88	M	Y		10/97 ▸	2510022012	**506406**	N	
1.5 12V *VF3NA, VD3NA, VA3NA*	E	1495	G4EK-88	A	Y		10/97 ▸	2510022012	**506406**	N	
Galloper									
2.5 TCi *901A, 900A*	D	2476	D4BH-105	M	Y		10/97 ▸	2510042541	**506736**	N	
2.5 TCi *900A, 901A*	D	2476	D4BH-105	A	Y		10/97 ▸	2510042541	**506736**	N	
Getz (2002>2005)									
1.1 i 12V *TBANO, TBAMO*	E	1086	G4H46	M	Y		09/02 ▸ 08/05	2510002502	**506777**	N	
1.3 i 12V *TBCNP, TBCMP*	E	1341	G4EH60	M	Y		09/02 ▸ 03/04	2510022650	**506406**	N	
1.3 i 12V *TBCMP, TBCNP*	E	1341	G4EH60	A	Y		09/02 ▸ 03/04	2510022650	**506406**	N	
1.6 i 16V *TB*	E	1599	G4GRE2	M	Y		09/02 ▸ 12/03	2510026902	**506813**	N	
1.6 i 16V *TB*	E	1599	G4GRE2	A	Y		09/02 ▸ 12/03	2510026902	**506813**	N	
1.5 CRDi 12V *TBGNS*	D	1493	D3-EA	M	Y		03/03 ▸ 08/05	2510027000	**506814**	CR	
Getz (2005>)									
1.1 i 12V	E	1086	G4H48	M	Y		09/05 ▸	2510002502	**506777**	N	
1.4 i 16V	E	1399	G4EE	M	Y		09/05 ▸	2510026902	**506813**	N	
1.4 i 16V	E	1399	G4EE	A	Y		09/05 ▸	2510026902	**506813**	N	
1.5 CRDi 16V	D	1493	D4F,D4FA-G	M	Y		09/05 ▸ 11/06	251002A000	▲**506976**	N	
Getz (2007>)									
1.1 i 12V	E	1086	1.1L-EPSILON	M	Y		01/07 ▸	2510002577	**506897**	N	
1.5 CRDi 16V	D	1493	1.5L-U	M	Y		11/06 ▸ 04/08	251002A001	▲**506976**	N	
Grandeur									
2.2 CRDi 16V *TGBN*	D	2188	D4-EB	A	Y	20 teeth	06/06 ▸	2510027400	**506922**	CR	
i10									
1.1 i 12V *PAF5P*	E	1086	1.1L-EPSILON	M	Y		12/07 ▸	2510002577	**506897**	N	

• **New** Nouveau **Nuevo** Novo **Nuovo** Nieuw **Neu** Yeni Новый Nou

Valeo

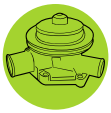

		Type Ctr.		cc					OE	Valeo		
HYUNDAI (.../...)												
i10 (.../...)												
1.1 i 12V	*PAF5P*	E	1086	1.1L-EPSILON	A	Y		12/07 ▸	2510002577	**506897**	N	
1.1 CRDi 12V	*PAF5D*	D	1120	1.1L-U	M	Y		12/07 ▸ 04/08	251002A001	**▲506976**	N	
i20												
1.4 i 16V, 1.4 CVVT 16V		E	1396	1.4L-GAMMA	M	Y		11/08 ▸	251002B000	**▲506977**	N	
1.4 CVVT 16V		E	1396	1.4L-GAMMA	A	Y		10/08 ▸	251002B000	**▲506977**	N	
1.6 CVVT 16V		E	1591	1.6L-GAMMA	M	Y		10/08 ▸	251002B000	**▲506977**	N	
1.6 CVVT 16V		E	1591	1.6L-GAMMA	A	Y		10/08 ▸	251002B000	**▲506977**	N	
i30												
1.6 CVVT 16V		E	1591	1.6L-GAMMA	M	Y		11/08 ▸	251002B000	**▲506977**	N	
1.6 CVVT 16V		E	1591	1.6L-GAMMA	A	Y		11/08 ▸	251002B000	**▲506977**	N	
1.4 i 16V	*FDB5P*	E	1396	1.4L-GAMMA	M	Y		03/07 ▸	251002B000	**▲506977**	N	
1.4 i 16V		E	1397	D4FAE	M	Y		10/07 ▸	251002B000	**▲506977**	N	
1.6 CVVT 16V		E	1591	1.6L-GAMMA,G4FC	M	Y		12/07 ▸	251002B000	**▲506977**	N	
1.6 CVVT 16V		E	1591	1.6L-GAMMA,G4FC	A	Y		12/07 ▸	251002B000	**▲506977**	N	
1.6 CRDi 16V	*FDB5D*	D	1582	1.6L-U	M	Y		03/07 ▸	251002A000	**▲506976**	N	
1.6 CRDi 16V	*FDB5D*	D	1582	1.6L-U	A	Y		03/07 ▸	251002A000	**▲506976**	N	
2.0 CRDi 16V	*FDB5D*	D	1991	2.0L-D	M	Y	20 teeth	03/07 ▸	2510027400	**506922**	CR	
Lantra (90>95)												
1.5	*KF3JE, JF2JE, JF3JE*	E	1468	G4DJJE, G4DJJA	M	Y		12/90 ▸ 05/95	2510024060	**506406**	N	
1.5	*JF3JA, JF2RA, KF3JA*	E	1468	G4DJJE, G4DJJA	A	Y		12/90 ▸ 05/95	2510024060	**506406**	N	
1.8 16V	*JF3ME, KF3ME*	E	1836	G4CN	M	Y		06/92 ▸ 05/95	2510033120	**506617**	N	
1.8 16V	*KF3MA, JF3MA*	E	1836	G4CN	A	Y		06/92 ▸ 05/95	2510033120	**506617**	N	
Lantra (95>)												
1.5 i 12V	*JW3KE, JF3KE, JW2KE JF2KE*	E	1495	G4EK-88	M	Y		09/96 ▸	2510022012	**506406**	N	
1.5 i 12V	*JF2KA, JF3KA*	E	1495	G4EK-88	A	Y		09/96 ▸	2510022012	**506406**	N	
1.9 D	*JW3ZE, JF3ZE, JF2ZE, JW2ZE*	D	1905	XUD9	M	Y		09/97 ▸ 07/00	2511129000	**506117**	CR	
Matrix												
1.6 i	*FCWJ*	E	1599	G4,G4GD	M	Y		05/01 ▸ 08/08	2510026900	**506813**	N	
1.6 i	*FCWJ*	E	1599	G4GD	A	Y		05/01 ▸ 08/06	2510026900	**506813**	N	
1.5 CRDi,1.5 CRDi 12V	*FCAN, FCSN, FCANC, FCVLC*	D	1493	D3-EA81, D4FA, D3-EA	M	Y		07/01 ▸ 10/06	2510027000	**506814**	CR	
1.5 CRDi	*FCSN*	D	1493	D4FA	A	Y		02/05 ▸ 10/06	2510027000	**506814**	CR	
1.5 CRDi	*FCANC, FCAN, FCSN*	D	1493	D4FA,D4FA-G	M	Y		02/05 ▸ 08/08	251002A000	**▲506976**	N	
1.5 CRDi	*FCSN*	D	1493	D4FA	A	Y		02/05 ▸ 08/05	251002A000	**▲506976**	N	
Matrix FL (TR09) (2008>)												
1.6 i		E	1599	1.6L-ALPHA DOHC	M	Y		08/08 ▸	2510026550	**506813**	N	
1.6 i		E	1599	1.6L-ALPHA DOHC	A	Y		08/08 ▸	2510026550	**506813**	N	
Plaza												
2.5 TD	*WT11H*	D	2476	D4BH-100	M	Y		02/00 ▸	2510042541	**506736**	N	
2.5 TD	*WT11H*	D	2476	D4BH-100	A	Y		02/00 ▸	2510042541	**506736**	N	
Pony (89>94)												
1.3,1.3 i	*UD3ME, VD3ME, VA2ME VF3ME, UDFME, VF2MD UA2ME, VD1ME, VF2ME VD2ME, UD1ME, UF2MD UD1MD, UD2MD, VD2MD UD2ME, VD1MD*	E	1298	G4DGJE, G4DGJA	M	Y		08/89 ▸ 10/94	2510022012	**506406**	N	
1.5,1.5 i	*VF2JD, UF3JE, VD3JE VD2JE, VD1JD, UA3JE UD2JE, UD2JD, VD2JD VA3JE, UD1JD, UD1JE VA2JD, VF3JE*	E	1468	G4DJJA, G4DJJE	M	Y		08/89 ▸ 10/94	2510022012	**506406**	N	

• **New** Nouveau **Nuevo** Novo **Nuovo** Nieuw **Neu** Yeni Новый Nou

Type Ctr.	cc					2 3	OE	Valeo		
HYUNDAI (.../...)										
Pony (89>94) (.../...)										
1.5,1.5 i *VD3JA, UD2JA, VD2JA, VA2JA, VF3JA, UD1JA, VD1JA*	E	1468	G4DJJE, G4DJJA	A	Y		08/89 ▸ 10/94	2510022012	**506406**	N
Pony (94>)										
1.3 i *VD2LE, VD3LE, VA3LE, VA2LE, VF2LE, VF3LE*	E	1341	G4EH62	M	Y		10/97 ▸	2510022012	**506406**	N
1.5 i 12V *VD2NE, VA3NE*	E	1495	G4EK-88	M	Y		10/97 ▸	2510022012	**506406**	N
1.5 i 12V *VA3NA*	E	1495	G4EK-88	A	Y		10/97 ▸	2510022012	**506406**	N
Santa Fé										
2.7 i V6 24V *SMS2K*	E	2657	G6BA-G-173	A	Y		08/00 ▸ 02/06	2510037102	**506819**	SS
2.0 CRDi 16V *SMV1G, SMU2N, SMV2G*	D	1991	D4-EA	M	Y		12/00 ▸ 02/06	2510027000	**506814**	CR
2.0 CRDi 16V *SMV2J, SMU2N, SMV1J*	D	1991	D4-EA	A	Y		12/00 ▸ 02/06	2510027000	**506814**	CR
Santa Fé (2006>)										
2.2 CRDi 16V *CMF7D, CMC5D*	D	2188	D4-EB	M	Y		03/06 ▸ 10/06	2510027000	**506814**	CR
2.2 CRDi 16V *CMF7D, CMC5D*	D	2188	D4-EB	A	Y		03/06 ▸ 10/06	2510027000	**506814**	CR
Santamo										
2.0 i,2.0 i 16V *N33, N43*	E	1997	I4-DOHC, I4-SOHC	M	Y		07/98 ▸	2510033132	**506617**	N
2.0 i,2.0 i 16V *N43, N33*	E	1997	I4-DOHC, I4-SOHC	A	Y		07/98 ▸	2510033132	**506617**	N
Satellite										
2.4 i *WWH7S*	E	2351	G4CSS	M	Y		01/98 ▸	2510032033	**506405**	N
2.4 i *WWH7S*	E	2351	G4CSS	A	Y		07/98 ▸	2510032033	**506405**	N
2.5 TD *WT11H*	D	2476	D4BH-100	M	Y		07/00 ▸	2510042541	**506736**	N
2.5 TD *WWH7F*	D	2476	D4BF-80	M	Y		03/98 ▸	2510042000	**506778**	N
2.5 TD *WWH7F*	D	2476	D4BF-80	A	Y		07/98 ▸	2510042000	**506778**	N
2.5 CRDi *WJ11H, WJ110*	D	2497	D4CB	M	Y		02/02 ▸ 05/05	251004A000	**506826**	N
S-Coupé										
1.5,1.5 i *UE3JE, VE3JE, UE2JE, VE2JE*	E	1468	G4DJJE, G4DJJA	M	Y		03/90 ▸ 06/92	2510022012	**506406**	N
1.5,1.5 i *VE3JA, VE2JA, UE3JA, UE2JA*	E	1468	G4DJJE, G4DJJA	A	Y		03/90 ▸ 06/92	2510022012	**506406**	N
1.5 i 12V,1.5 i Turbo *UE3NE, VE3NE, VE2NE, UE2NE*	E	1495	G4EKET, G4EK-88	M	Y		06/92 ▸ 05/96	2510022012	**506406**	N
1.5 i 12V,1.5 i Turbo *UE3NA, VE2NA, VE3NA, UE2NA*	E	1495	G4EKET, G4EK-88	A	Y		06/92 ▸ 05/96	2510022012	**506406**	N
Sonata (88>93)										
1.8 *BF2DE, BF3DE, AF2DE, AF3DE*	E	1795	G4CM	M	Y		10/88 ▸ 06/93	2510032502	**506407**	N
1.8 *BF2DA, BF3DA, AF3DA, AF2DA*	E	1795	G4CM	A	Y		10/88 ▸ 06/93	2510032502	**506407**	N
2.0 *BF3FE, BF2FE, AF2FE, AF3FE*	E	1997	G4CP	M	Y		10/88 ▸ 06/93	2510032502	**506407**	N
2.0 i 16V *AF3FE, BF3FE, BF2FE*	E	1997	G4CPD	M	Y		03/91 ▸ 06/93	2510033111	**506617**	N
2.0 *BF2FA, BF3FA, AF3FA, AF2FA*	E	1997	G4CP	A	Y		10/88 ▸ 06/93	2510032502	**506407**	N
2.0 i 16V *BF3FA, AF3FA, BF2FA*	E	1997	G4CPD	A	Y		03/91 ▸ 06/93	2510033111	**506617**	N
2.4 i *BF3SE, BF2SE, AF2SE, AF3SE*	E	2351	G4CS	M	Y		10/88 ▸ 03/91	2510032502	**506407**	N
2.4 i *BF3SA, BF2SA, AF3SA, AF2SA*	E	2351	G4CS	A	Y		10/88 ▸ 03/91	2510032502	**506407**	N
3.0 i V6 *BF3TA, AF3TA*	E	2972	G6AT	A	Y		09/90 ▸ 06/93	2510035030	**506408**	SS
Sonata (93>98)										
1.8 *DF2DE, CF2DE, CF3DE, DF3DE*	E	1795	G4CM	M	Y		07/93 ▸ 07/98	2510032568	**506407**	N
1.8 *CF3DA, DF2DA, CF2DA, DF3DA*	E	1795	G4CM	A	Y		07/93 ▸ 07/98	2510032568	**506407**	N
2.0 *DF2FE, CF2FE*	E	1997	G4CP	M	Y		07/93 ▸ 07/98	2510032568	**506407**	N
2.0 16V *CF3FE, DF3FE*	E	1997	G4CPD	M	Y		07/93 ▸ 07/98	2510033132	**506617**	N
2.0 16V *DF3FA, CF3FA*	E	1997	G4CPD	A	Y		07/93 ▸ 07/98	2510033132	**506617**	N
2.0 *CF2FA, DF2FA*	E	1997	G4CP	A	Y		07/93 ▸ 07/98	2510032568	**506407**	N
3.0 *DF3TA, CF3TA*	E	2972	G6AT	A	Y		07/93 ▸ 07/98	2510032568	**506407**	N
Sonata (98>2001)										
2.0 i 16V *EN41B, EM41B*	E	1997	G4JP	M	Y		08/98 ▸ 06/01	2510038002	**506816**	N

• **New** Nouveau **Nuevo** Novo **Nuovo** Nieuw **Neu** Yeni Новый Nou

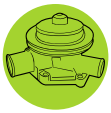

Type Ctr.		CC						OE	Valeo		

HYUNDAI (.../...)

Sonata (98>2001) (.../...)

2.0 i 16V	EN41B, EM41B	E	1997	G4JP	A	Y		08/98 ▸ 06/01	2510038002	**506816**	N	
2.4 i	EN41D	E	2351	G4DS	M	Y		10/98 ▸ 06/01	2510038002	**506816**	N	
2.4 i	EN41D	E	2351	G4DS	A	Y		10/98 ▸ 06/01	2510038002	**506816**	N	
2.5 i V6 24V	EN41E	E	2493	G6AV	M	Y		09/98 ▸	2510037102	**506819**	SS	
2.5 i V6 24V	EN41E	E	2493	G6AV	A	Y		08/98 ▸	2510037102	**506819**	SS	

Sonata (2001>2005)

2.0 i 16V	EF	E	1997	G4DP-E4	M	Y		07/01 ▸ 01/03	2510038002	**506816**	N	
2.0 i 16V	EF	E	1997	G4DP-E4	A	Y		07/01 ▸ 01/03	2510038002	**506816**	N	
2.7 i V6 24V	EF	E	2657	G6BA-G-173	M	Y		07/01 ▸	2510037200	**506819**	SS	
2.7 i V6 24V	EF	E	2657	G6BA-G-173	A	Y		12/01 ▸	2510037200	**506819**	SS	

Sonata (2005>)

2.0 CRDi 16V	NFEKY	D	1991	D4-EA	M	Y	20 teeth	04/06 ▸	2510027400	**506922**	CR	
2.0 CRDi 16V	NFEKY	D	1991	D4-EA	A	Y	20 teeth	04/06 ▸	2510027400	**506922**	CR	

Sonata (2008>)

2.0 CRDi 16V	NFG5D	D	1991	2.0L-D	M	Y	20 teeth	04/08 ▸	2510027400	**506922**	CR	
2.0 CRDi 16V	NFG5D	D	1991	2.0L-D	A	Y	20 teeth	04/08 ▸	2510027400	**506922**	CR	

Sonica

2.5 i 24V	EN41E	E	2493	G6AV	M	Y		09/98 ▸	2510037102	**506819**	SS	
2.5 i 24V	EN41E	E	2493	G6AV	A	Y		09/98 ▸	2510037102	**506819**	SS	

Starex

2.4 i	WWH7S	E	2351	G4CSS	M	Y		01/98 ▸	2510032033	**506405**	N	
2.4 i	WWH7S	E	2351	G4CSS	A	Y		01/98 ▸	2510032033	**506405**	N	
2.5 TD	WT11H	D	2476	D4B	M	Y		02/00 ▸	2510042541	**506736**	N	
2.5 TD	WWH7F	D	2476	D4BF-80	M	Y		01/98 ▸	2510042000	**506778**	N	
2.5 TD	WT11H	D	2476	D4B	A	Y		02/00 ▸	2510042541	**506736**	N	
2.5 TD	WWH7F	D	2476	D4BF-80	A	Y		01/98 ▸	2510042000	**506778**	N	
2.5 CRDi		D	2497	D4CB	M	Y		02/02 ▸ 05/05	251004A000	**506826**	N	

Terracan

3.5 i V6	HPW	E	3497	G674	M	Y		07/01 ▸ 07/07	2510039802	**▲506935**	SS	
3.5 i V6	HPW	E	3497	G674	A	Y		07/01 ▸ 07/07	2510039800	**▲506935**	SS	
2.5 TD	HPW2J	D	2476	D4BH-100	M	Y		05/01 ▸ 02/02	2510042541	**506736**	N	

Tiburon

1.6 i 16V	GK	E	1599	G4GRE2	M	Y		01/02 ▸ 12/06	2510026900	**506813**	N	
2.7 i V6 24V	GKFZ	E	2657	G6BA-G-167	M	Y		01/02 ▸	2510037102	**506819**	SS	
2.7 i V6 24V	GKFZ	E	2657	G6BA-G-167	A	Y		01/02 ▸	2510037102	**506819**	SS	

Trajet (2000>2004)

2.7 i V6 24V		E	2656	G6BA	A	Y		02/00 ▸ 02/04	2510037102	**506819**	SS	
2.0 CRDi 16V	FOVD	D	1991	D4-EA	M	Y		05/01 ▸ 02/04	2510027000	**506814**	CR	
2.0 CRDi 16V	FOVD	D	1991	D4-EA	A	Y		05/01 ▸ 02/04	2510027000	**506814**	CR	

Trajet (2004>)

2.0 CRDi 16V	FOVD	D	1991	D4-EA	M	Y	20 teeth	03/04 ▸	2510027400	**506922**	CR	
2.0 CRDi 16V	FOVD	D	1991	D4-EA	A	Y	20 teeth	03/04 ▸	2510027400	**506922**	CR	

Tucson

2.0 CRDi 16V	JMBG, JMAIS, JMBHS	D	1991	D4-EA	M	Y	20 teeth	07/04 ▸	2510027400	**506922**	CR	
2.0 CRDi 16V	JMAGP, JMBG, JMAIT	D	1991	D4-EA	A	Y	20 teeth	07/04 ▸	2510027400	**506922**	CR	

XG (99>2002)

2.5 i V6 24V	XG	E	2493	G6BV	M	Y		01/99 ▸ 08/02	2510037102	**506819**	SS	
2.5 i V6 24V	XG	E	2493	G6BV	A	Y		01/99 ▸	2510037102	**506819**	SS	

HYUNDAI

H1

2.4 i	WWH7S	E	2351	G4CSS	M	Y		05/98 ▸ 02/00	2510032033	**506405**	N	

• **New** Nouveau **Nuevo** Novo **Nuovo** Nieuw **Neu** Yeni Новый Nou

Type Ctr.		cc						OE	Valeo		
HYUNDAI (.../...)											
H1 (.../...)											
2.5 TD *WT11H*	D	2476	D4B	M	Y		02/00 ▸	2510042541	**506736**	N	
2.5 TD *WWH7F*	D	2476	D4BF-80	M	Y		10/97 ▸	2510042000	**506778**	N	
2.5 CRDi *WWJT, W*	D	2497	D4CB	M	Y		02/02 ▸	251004A000	**506826**	N	
H100											
2.4 *FDS1W, FDS1V*	E	2351	G4CSAAS	M	Y		07/93 ▸ 10/94	2510032020	**506778**	N	
2.4 *FDS1V, FDS1W*	E	2351	G4CSAAS	M	Y		10/94 ▸	2510032033	**506405**	N	
2.5 D *FDX2V, FDX2W, FDX1W, FDX1V*	D	2476	D4BB, D4BX	M	Y		07/93 ▸	2510042541	**506736**	N	
INFINITI											
EX											
3.5 i V6 24V	E	3498	VQ35HR	A	Y		04/08 ▸	B1010JK20A	**506924**	G	
3.7 i V6 24V	E	3696	VQ37VHR	A	Y		04/08 ▸	B1010JK20A	**506924**	G	
FX											
3.5 i V6 24V	E	3498	VQ35HR	A	Y		07/08 ▸	B1010JK20A	**506924**	G	
3.7 i V6 24V	E	3696	VQ37HR	A	Y		07/08 ▸	B1010JK20A	**506924**	G	
G35											
3.5 i V6 24V	E	3498	VQ35HR	A	Y		12/06 ▸	B1010JK20A	**506924**	G	
G37											
3.7 i V6 24V	E	3696	VQ37VHR	M	Y		06/08 ▸	B1010JK20A	**506924**	G	
3.7 i V6 24V	E	3696	VQ37VHR	A	Y		10/07 ▸	B1010JK20A	**506924**	G	
INNOCENTI											
Elba											
1.3 *146CW* ▸ 5055671	E	1301	146A5.000	M	Y		04/91 ▸	5890406	**506063**	N	
1.4 ie *146EQ, 146EN*	E	1372	146D5.000, 146C5.000	M	Y		03/95 ▸ 1997	46437911	**506524**	vvv	506613
1.5 ie *146C9*	E	1498	149C1.000	M	Y		04/92 ▸ 11/94	7784981	**506572**	V	506143
1.6 ie *146ER*	E	1581	146D6.000	M	Y		03/95 ▸ 1997	46437911	**506524**	vvv	506613
1.6 ie *146E0*	E	1591	146C6.000	M	Y		03/95 ▸ 12/94	46437911	**506524**	vvv	506613
1.7 D *146E1, 146DI*	D	1697	146B2.000	M	Y		10/92 ▸ 1997	46409136	**506562**	N	
1.7 D *146E1, 146DI*	D	1697	146B2.000	M	Y		10/92 ▸ 1997	46410562	**506695**	N	
Mille											
1.0 ie *146FP*	E	994	146C7.000	M	Y		05/94 ▸	5890406	**506063**	N	
1.7 D *146EI*	D	1697	146B2.000	M	Y		05/95 ▸	46409136	**506562**	N	
IVECO											
Daily (78>89)											
2.4 D *1001, 1003, 9005, 1005*	D	2445	8140.61	M	Y		1978 ▸	99440728	**506106**	N	
Daily (89>96)											
2.5 D,2.5 TD *1293, 1291, 1301, 1305 1295, 1303*	D	2499	8140.07, 8140.27S	M	Y		1989 ▸	99440728	**506106**	N	
2.5 D,2.5 TD *1321, 1305, 1293, 1381 1303, 1301, 1313, 1295 1311, 1291, 1385, 1297*	D	2499	8140.27S, 8140.07, 8140.47R 8140.47, 8140.97	M	Y		1989 ▸ 1996	99448066	**506304**	N	
2.5 D,2.5 TD *1311, 1301, 1293, 1291 1305, 1313, 1303, 1295*	D	2499	8140.47, 8140.27S, 8140.07	M	Y		03/89 ▸	98435994	**506302**	N	
Daily (96>99)											
2.5 D *1493, 1491*	D	2499	8140-67F	M	Y		04/96 ▸ 05/99	99440728	**506106**	N	
2.5 D,2.5 TD *1553, 1491, 1493, 1593*	D	2499	8140.47R, 8140-67F	M	Y		04/96 ▸ 05/99	500300476	**506304**	N	

• **New** Nouveau **Nuevo** Novo **Nuovo** Nieuw **Neu** Yeni Новый Nou

Valeo

Type Ctr.		cc						OE	Valeo		
JEEP (.../...)											
Cherokee (2001>2004) (.../...)											
2.4 i 16V	E	2429	ED1	A	Y		01/01 ▸	4694307AB	**506605**	CR	
3.7 i V6	E	3700	EKG-211	M	Y		01/01 ▸	53021187AA	**506823**	SS	
3.7 i V6	E	3700	EKG-211	A	Y		01/01 ▸	53021187AA	**506823**	SS	
Cherokee (2004>)											
3.7 i V6	E	3700	EKG-204	A	Y		11/04 ▸	53021187AA	**506823**	SS	
Compass											
2.0 CRD Turbo 16V	D	1968	ECD	M	Y		01/08 ▸	68000693AB	**506699**	CR	
Commander											
3.7 V6 12V	E	3701	EKG	A	Y		09/05 ▸	53022189AA	**506823**	SS	
4.7 i V8	E	4701	EVA	A	Y		09/05 ▸	68045797AA	**506823**	SS	
Grand Cherokee (93>2000)											
4.0 i	E	3964	ERH	A	N		01/93 ▸	4626054	**506456**	N	
2.5 TD	D	2499	ENC	M	Y		01/97 ▸ 07/99	4864566	**506692**	N	506589
3.1 D	D	3124	EXA	A	Y		11/98 ▸	4864566	**506692**	N	506589
Grand Cherokee (2003>2005)											
4.0 i	E	3956	ERH	A	Y		05/03 ▸ 05/05	5012366AC	**506795**	N	
4.7 i V8	E	4701	EVA,EVC	A	Y		05/03 ▸ 05/05	53021187AA	**506823**	SS	
Patriot											
2.0 CRD *MK-J*	D	1968	ECD	M	Y		06/07 ▸	68000693AB	**506699**	CR	
2.0 CRD *MK-J*	D	1968	ECD	A	Y		06/07 ▸	68000693AB	**506699**	CR	
Wrangler (86>96)											
4.0 i	E	3956	WR4.0	M	Y		09/90 ▸ 07/96	4626215	**506446**	N	
Wrangler (96>2006)											
2.5 i	E	2464	EPE	M	Y		01/02 ▸ 11/02	5012366AB	**506795**	N	
2.5 i	E	2464	EPE	M	N		08/96 ▸ 12/97	4626054	**506456**	N	
2.5 i	E	2464	EPE	A	Y		01/02 ▸ 11/02	5012366AB	**506795**	N	
2.5 i	E	2464	EPE	A	N		08/96 ▸ 12/97	4626054	**506456**	N	
4.0 i	E	3956	ERH-177	M	Y		08/03 ▸	5012366AC	**506795**	N	
4.0 i	E	3956	ERH-177	A	Y		08/03 ▸	5012366AC	**506795**	N	
4.0 i	E	3964	ERH	M	Y		06/00 ▸	5012366AC	**506795**	N	
4.0 i	E	3964	ERH	A	Y		01/00 ▸	5012366AC	**506795**	N	
4.0 i	E	3964	ERH	A	N		08/96 ▸ 12/97	4626054	**506456**	N	
KIA											
Avella											
1.3 i 16V	E	1324	B3-EGI	M	Y		12/98 ▸ 12/99	KKY0115010D	**506399**	N	
1.3 i 16V	E	1324	B3-EGI	A	Y		12/98 ▸ 12/99	KKY0115010D	**506399**	N	
1.5 i 16V	E	1498	B5-16V	M	Y		12/98 ▸ 12/99	0K93015010A	**506399**	N	
1.5 i 16V	E	1498	B5-16V	A	Y		12/98 ▸ 12/99	0K93015010A	**506399**	N	
Carens (99>2002)											
1.8 i 16V *FJUDB65, K2CB, FJUSB65 FJWSB65, FJWDB65*	E	1793	T8	M	Y		12/99 ▸ 01/01	0K24715010C	**506825**	N	
Carens II (2002>2006)											
1.6 i 16V *FJWSR65, FJWDR65*	E	1594	GA6D	M	Y		07/02 ▸ 05/06	251002X200	**506817**	N	
2.0 CRDi 16V *FJUSS85, FJWSS85, FJUDS85 FJWDS85*	D	1991	TCI	M	Y		07/02 ▸ 05/06	2510027000	**506814**	CR	
2.0 CRDi 16V *FJWDS8B, FJUSS8B, FJUDS8B FJWSS8B*	D	1991	TCI	A	Y		07/02 ▸	2510027000	**506814**	CR	
Carens III (2006>)											
2.0 CVVT 16V	E	1998	G4KA	M	Y	20 teeth	06/06 ▸	2510027400	**506922**	CR	

• **New** Nouveau **Nuevo** Novo **Nuovo** Nieuw **Neu** Yeni Новый Nou

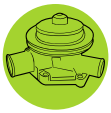

Type Ctr.		cc						OE	Valeo		

KIA (.../...)

Carens III (2006>) (.../...)

2.0 CVVT 16V	E	1998	G4KA	A	Y	20 teeth	06/06 ▸	2510027400	**506922**	CR

Cee'd (2006>2009)

1.4 i CVVT 16V	E	1397	1.4L-GAMMA	M	Y		07/09 ▸ 12/09	251002B000	▲**506977**	N
1.4 CVVT 16V	E	1397	D4FAE	M	Y		08/06 ▸	251002B000	▲**506977**	N
1.6 i CVVT 115 16V,1.6 i CVVT 126 16V	E	1591	1.6L GAMMA,1.6L-GAMMA	M	Y		07/09 ▸ 12/09	251002B000	▲**506977**	N
1.6 CVVT 16V,1.6 i CVVT 126 16V	E	1591	1.6L-GAMMA,G4FC	M	Y		08/06 ▸	251002B000	▲**506977**	N
1.6 CVVT 16V,1.6 i CVVT 126 16V	E	1591	1.6L-GAMMA,G4FC	A	Y		08/06 ▸	251002B000	▲**506977**	N
1.6 CRDi VGT 16V	D	1582	D4FB,D4FB-L	M	Y		08/06 ▸	251002A000	▲**506976**	N
1.6 CRDi VGT 16V	D	1582	D4FB,D4FB-L	A	Y		08/08 ▸	251002A000	▲**506976**	N
2.0 CRDi VGT 16V	D	1991	D4EA,D4EA-VGT	M	Y	20 teeth	08/06 ▸	2510027400	**506922**	CR

Cerato (2004>2008)

1.6 i CVVT 16V *CDADR65, CDFDR65*	E	1591	G4FC	M	Y		08/06 ▸	2510026902	**506813**	N
1.6 i 16V *CDAGR65*	E	1599	G4ED	M	Y		01/04 ▸	2510026902	**506813**	N
1.6 i 16V	E	1599	G4ED	A	Y		01/04 ▸	2510026902	**506813**	N
1.5 CRDi 16V *CDAGPC5*	D	1493	D4FA	M	Y		04/05 ▸	251002A000	▲**506976**	N
1.6 CRDi 16V	D	1582	D4FB	M	Y		03/06 ▸	251002A000	▲**506976**	N
1.6 CRDi 16V	D	1582	D4FB	A	Y		03/06 ▸	251002A000	▲**506976**	N
2.0 CRDi 16V *CDFGS85, CDAGS85*	D	1991	D4EA	M	Y		01/04 ▸ 03/04	2510027000	**506814**	CR

Cerato (2008>)

1.6 CVVT 16V	E	1591	1.6L-GAMMA	M	Y		10/08 ▸ 12/09	251002B000	▲**506977**	N
1.6 CVVT 16V	E	1591	1.6L-GAMMA	A	Y		10/08 ▸ 12/09	251002B000	▲**506977**	N

Clarus

1.8 i 16V *K9AR, K9AN, K9AA, GC5232*	E	1793	T8	M	Y		03/96 ▸	0K24715010A	**506825**	N
1.8 i 16V *K9AS, K9AB, K9AP*	E	1793	T8	A	Y		09/97 ▸	0K24715010A	**506825**	N

Credos

1.8 i 16V *K9AA*	E	1793	T8	M	Y		09/97 ▸	0K24715010A	**506825**	N
1.8 i 16V *K9AB*	E	1793	T8	A	Y		09/97 ▸	0K24715010A	**506825**	N

Joice

2.0 i 16V *EGZDS65*	E	1997	G4	M	Y		09/99 ▸	2510033132	**506617**	N
2.0 i 16V *EGZDS, EGZDS6B*	E	1997	G4CPD, G4	A	Y		09/99 ▸	2510033132	**506617**	N

K2500 II (2005>)

2.5 TD	D	2476	D4BH	M	Y		01/05 ▸	2510042541	**506736**	N

Magentis (2001>2005)

2.0 i 16V *FSFGS65*	E	1997	G4JP	M	Y		02/01 ▸ 12/05	2510038002	**506816**	N
2.0 i 16V *FSFGS6B*	E	1997	G4JP	A	Y		02/01 ▸ 12/05	2510038002	**506816**	N
2.5 i V6 24V *FSFGV65*	E	2493	G6BV	M	Y		02/01 ▸ 12/05	2510037102	**506819**	SS

Magentis (2006>)

2.0 CRDi 16V *DDFDS87*	D	1991	D4EA-VGT	M	Y	20 teeth	01/06 ▸	2510027400	**506922**	CR
2.0 CRDi 16V *DDFDS8B*	D	1991	D4EA-VGT	A	Y	20 teeth	01/06 ▸	2510027400	**506922**	CR

Mentor

1.5 i *FA2222, FA2422*	E	1498	B5	M	Y		06/96 ▸	0K93015010A	**506399**	N
1.5 i	E	1498	B5-16V	M	Y		06/99 ▸ 06/01	0K93715010	**506401**	N
1.5 i *FA2223, FA2423*	E	1498	B5	A	Y		01/97 ▸	0K93015010A	**506399**	N
1.5 i	E	1498	B5-16V	A	Y		06/99 ▸ 06/01	0K93715010	**506401**	N
1.6 i	E	1594	GA6D	M	Y		06/01 ▸	251002X200	**506817**	N
1.6 i	E	1594	GA6D	A	Y		06/01 ▸	251002X200	**506817**	N
1.6 i *FA2252*	E	1598	B6	M	Y		05/94 ▸ 01/97	0K93015010A	**506399**	N
1.6 i *FA2253*	E	1598	B6	A	Y		05/94 ▸ 01/97	0K93015010A	**506399**	N

Picanto (2004>2007)

1.0 *BA2442*	E	999	G4HF	M	Y		01/04 ▸ 12/07	2510002566	**506897**	N
1.1 *BA2432*	E	1086	G4HG	M	Y		01/04 ▸ 12/07	2510002566	**506897**	N
1.1 *BA2433*	E	1086	G4HG	A	Y		01/04 ▸ 12/07	2510002566	**506897**	N

• **New** Nouveau **Nuevo** Novo **Nuovo** Nieuw **Neu** Yeni Новый Nou

		Type Ctr.		cc					OE	Valeo		
KIA (.../...)												
Picanto (2004>2007) (.../...)												
1.1 CRDi	*BA2452*	D	1120	D3FA	M	Y		11/05 ▸ 12/07	251002A000	▲506976	N	
Picanto (2007>)												
1.0		E	999	G4HF-E4	M	Y		12/07 ▸	2510002566	506897	N	
1.1		E	1086	G4HG	M	Y		12/07 ▸	2510002566	506897	N	
1.1		E	1086	G4HG	A	Y		12/07 ▸	2510002566	506897	N	
1.1 CRDi 12V		D	1120	1.1L-U	M	Y		12/07 ▸	251002A000	▲506976	N	
Pride												
1.1	*DA2311*	E	1139	B1	M	Y		10/87 ▸ 09/94	KKY0115010D	506399	N	
1.3,1.3 i	*DA2322, K11G, DA2422 K11C, DA23, K11E, K11H*	E	1324	B3, B3-EGI	M	Y		10/87 ▸ 07/00	KKY0115010D	506399	N	
1.3 i	*K11D*	E	1324	B3-EGI	A	Y		10/94 ▸ 07/00	KKY0115010D	506399	N	
Pride Wagon												
1.3 i	*K14G*	E	1324	B3-EGI	M	Y		08/98 ▸ 07/00	KKY0115010D	506399	N	
1.3 i		E	1324	B3-EGI	A	Y		08/98 ▸ 07/00	KKY0115010D	506399	N	
Rio (2005>)												
1.4 i	*DE2212, DE2412*	E	1399	G4EE	M	Y		06/05 ▸ 04/08	2510026902	506813	N	
1.4 i	*DE2413, DE2213*	E	1399	G4EE	A	Y		06/05 ▸ 04/08	2510026902	506813	N	
1.6 i	*DE2232, DE2432*	E	1599	G4GD	M	Y		06/05 ▸ 04/08	2510026902	506813	N	
1.6 i	*DE2233, DE2433*	E	1599	G4GD	A	Y		06/05 ▸ 04/08	2510026902	506813	N	
1.5 CRDi	*DE2242, DE2442*	D	1493	D4FA	M	Y		06/05 ▸ 12/06	251002A001	▲506976	N	
1.5 CRDi	*DE2443, DE2243*	D	1493	D4FA	A	Y		06/05 ▸ 12/06	251002A001	▲506976	N	
Sephia												
1.5 i	*K280, K26S, K26T, K281*	E	1498	B5	M	Y		01/96 ▸	0K93015010A	506399	N	
1.5 i	*K282, K26V, K283, K26W*	E	1498	B5	A	Y		01/96 ▸	0K93015010A	506399	N	
1.6 i	*K2, K24J, FA, K24K, FA2252*	E	1598	B6	M	Y		01/93 ▸	0K93015010A	506399	N	
1.6 i	*FA, K2, FA2253, K24L, K24M*	E	1598	B6	A	Y		01/93 ▸	0K93015010A	506399	N	
Sephia II												
1.5 i	*K2AC*	E	1498	B5-16V	M	Y		09/98 ▸	0K93715010	506401	N	
1.5 i	*K2AD*	E	1498	B5-16V	A	Y		09/98 ▸	0K93715010	506401	N	
Shuma												
1.5 i	*FB2422, K2AC*	E	1498	B5-16V, B5	M	Y		09/98 ▸	0K93715010	506401	N	
1.5 i		E	1498	B5-16V	A	Y		09/98 ▸	0K93715010	506401	N	
1.6 i	*FB2472, FXADR65*	E	1594	GA6D	M	Y		02/01 ▸	251002X200	506817	N	
1.8 i 16V		E	1793	T8D	M	Y		09/98 ▸	0K24715010B	506825	N	
1.8 i 16V		E	1793	T8D	A	Y		09/98 ▸	0K24715010B	506825	N	
Sorento (2002>)												
2.4 i 16V	*JC5225*	E	2351	G4JSG	M	Y		05/03 ▸ 05/06	251004A000	506826	N	
3.5 i V6 24V	*JC5238*	E	3497	6G72	A	Y		05/03 ▸ 05/06	251004A000	506826	N	
2.5 CRDi 16V	*JC5215*	D	2497	D4CB	M	Y		04/02 ▸ 05/06	251004A000	506826	N	
2.5 CRDi 16V	*JC5218*	D	2497	D4CB	A	Y		04/02 ▸ 05/06	251004A000	506826	N	
Soul												
1.6 i 16V		E	1591	1.6L-GAMMA	M	Y		10/08 ▸ 12/09	251002B000	▲506977	N	
Sportage (93>2002)												
2.0 i	*K00E, K40A*	E	1998	FE	M	Y		07/93 ▸ 09/02	0FE1H15010H	506685	CR	
Sportage (2004>)												
2.7 i V6 24V	*FQWGH6C*	E	2656	G6BA	A	Y		12/04 ▸	2510037201	506819	SS	
2.0 CRDi	*FQWDS85, FQWDS86*	D	1991	D4EA,D4EA-VGT	M	Y	20 teeth	12/04 ▸	2510027400	506922	CR	
2.0 CRDi	*FQWDS8C*	D	1991	D4EA,D4EA-VGT	A	Y	20 teeth	12/04 ▸	2510027400	506922	CR	
Venga												
1.4 CVVT 16V		E	1397	1.4L-GAMMA	M	Y		12/09 ▸	251002B000	▲506977	N	
1.6 CVVT 16V		E	1591	1.6L-GAMMA	M	Y		12/09 ▸	251002B000	▲506977	N	

• **New** Nouveau **Nuevo** Novo **Nuovo** Nieuw **Neu** Yeni Новый Nou

Valeo

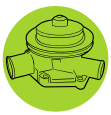

Type Ctr.	cc						OE	Valeo		

LANCIA (.../...)

Dedra (.../...)

1.8 ie	*835/AC54A/AD54A/AT54A BC54A/BD54A/CD54A/FA54A FA55B*	E	1756	835A2.046, 835A2.000 835C5.000, 836A5.000	M	Y		▸ 09/99	7783006	**506296**	N	
1.8 ie	*835/AC54A/AD54A/AT54A BC54A/BD54A/CD54A*	E	1756	835C5.000, 835A2.046 835A2.000	M	Y		03/89 ▸	7694229	**506859**	N	
2.0 ie,2.0 ie 16V 2.0 ie Turbo	*835/AI54A/AL54A/AO54W AP54W/AO54A/AR54A/ED55W*	E	1995	835A5.046, 836A3.000 835A5.000, 835A7.000 835A8.000, 835A8.046 835A7.046	M	Y			7783006	**506296**	N	
2.0 ie	*835/AI54A/AL54A*	E	1995	835A5.046, 835A5.000	M	Y		03/89 ▸	7694229	**506859**	N	
2.0 ie 16V	*835/ED54A/ED55B*	E	1995	836A3.000	M	Y		07/94 ▸	7747388	**506335**	N	
2.0 ie	*835/AL44A/EC44A*	E	1995	835A5.046	A	Y		▸ 09/99	7783006	**506296**	N	
2.0 ie	*835AL44A*	E	1995	835A5.046	A	Y		12/90 ▸	7694229	**506859**	N	
1.9 TDs 1723043 ▸	*835/EE54A/EE55B/EF54A EF55B*	D	1929	160D1.000, 835A4.000	M	Y		▸ 09/99	46435858	**506559**	N	506723
1.9 TDs ▸ 1753043	*835/AG54A/AG54A//AS54A EE54A/EE55B/EF54A/EF55B*	D	1929	835A4.000, 160D1.000	M	Y		03/89 ▸	7710471	**506560**	V+vv	506722
1.9 TDs	*835/EE54A/EE55B/EF54A EF55B*	D	1929	160D1.000,835A4.000	M	Y		07/94 ▸ 09/99	71737987		V+vv	506722

Delta (79>86)

1300	*831/AB03/AB04*	E	1301	831A.000	M	Y		09/79 ▸ 04/86	5894580		V	506075
1500	*831AB01*	E	1498	831A1.000	M	Y		09/79 ▸ 04/86	5894580		V	506075
1500	*831AB08B*	E	1498	831A1.000	A	Y		09/79 ▸ 04/86	5894580		V	506075
1600,1600 Turbo	*831/AB06/AB07*	E	1585	831A7.000, 831A4.000	M	Y		10/82 ▸ 04/86	7574887		N	506167

Delta (86>93)

1300	*831/AB011/AB022*	E	1301	831B.000	M	Y		05/86 ▸ 1993	5894580		V	506075
1500	*831AB014*	E	1498	831A1.000	A	Y		05/86 ▸ 1993	5894580		V	506075
1600 Turbo,1600 ie 1600 ie Turbo	*831/AB010/AB016/AB017 AB020/AB020S*	E	1585	831B7.046, 831B3.000 149C2.000, 831B7.000	M	Y		05/86 ▸	7574887		N	506167

Delta (93>99)

1.4 ie	*836/AF55A/AH55A*	E	1372	160A1.046, 836A4.000	M	Y		03/93 ▸	7784988		V+vv	506299
1.4 ie	*836/AF55A/AH55A*	E	1372	836A4.000, 160A1.046	M	Y		03/93 ▸	46437916		vvv	506379
1.6 ie	*836/AD55A/BD55A*	E	1581	835C1.000	M	Y		03/93 ▸ 02/95	7784988		V+vv	506299
1.6 ie	*836/AD55A/AP53A/AP55A BD55A*	E	1581	182A6.000, 835C1.000	M	Y		03/93 ▸	46437916		vvv	506379
1.6 ie,1.6 ie 16V	*836/AO53A/AO55A/AP53A AP55A*	E	1581	182A4.000,182A6.000	M	Y		07/95 ▸ 08/99	46444355	●**506523**	V+vv	
1.8 ie 16V	*836/AQ55A/AR53A/AR55A*	E	1747	182A2.000, 183A1.000	M	Y		07/95 ▸ 08/99	60811328		SS	506518
1.8 ie	*836/AE55A/AG55A/AI55A AL55A/BE55A/BI55A*	E	1756	835C2.000, 836A6.000 836A5.000, 835C4.000	M	Y		03/93 ▸ 08/99	7783006		N	506296
2.0 i 16V,2.0 i Turbo 16V	*836/AA55A/AB53A/AB55A AS53A/CA53A/CA55A*	E	1995	836A3.000, 836A2.000 175A4.000	M	Y		03/93 ▸ 08/99	7747388		N	506335
1.9 TD	*836/AM53A/AM55A/AN53A AN55A*	D	1929	160D1.000, 835A4.000	M	Y		▸ 08/99	46435858		N	506559
1.9 TD	*836/AM53A/AM55A/AN53A AN55A*	D	1929	160D1.000, 835A4.000	M	Y		06/94 ▸	7710471		V+vv	506560
1.9 TD	*836/AM53A/AM55A/AN53A AN55A*	D	1929	160D1.000,835A4.000	M	Y		06/94 ▸	71737987		V+vv	506722

Delta (2008>)

1.4 TJet 16V	*844/AXA1A/AXB1A*	E	1368	198A1.000,198A4.000	M	N		06/08 ▸	55204538	**506967**	CR	
1.6 MJTD 16V	*844/AXC11/AXF11*	D	1598	198A2.000,198A2.000/F,955A4.000 955A4.000/F	M	Y		06/08 ▸	46804051	**506808**	SS	
1.9 MJTD 16V	*844AXE1A*	D	1910	844A1.000/F	M	Y		07/08 ▸	46804051	**506808**	SS	
2.0 MJTD 16V	*844AXD1A*	D	1956	198A5.000/F	M	Y		07/08 ▸	46804051	**506808**	SS	

Kappa

2.0 ie 20V	*838/AA1AA/AG1AA/BG1AA*	E	1995	838A6.000, 838A1.000	M	Y		10/94 ▸	7762926	**506516**	SS	
2.0 ie Turbo 16V	*838/AB1AA/BB1AA/CB1AA XB1AA*	E	1995	834A4.000, 838A4.000	M	Y		07/95 ▸	7747386	**506123**	N	

• **New** Nouveau **Nuevo** Novo **Nuovo** Nieuw **Neu** Yeni Новый Nou

Valeo

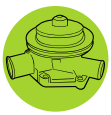

			cc						OE	Valeo		
LANCIA (.../...)												
Thema (.../...)												
3.0 V6	*834FD44A*	E	2959	834F.000	A	Y		09/92 ▸ 11/94	60811328	**506518**	SS	
2400 TD	*834/D/DPF*	D	2445	8144-81	M	Y		10/84 ▸ 09/88	98430541	**506295**	V	
2500 TD	*834/AE54A/AE55C/AM54A AM55C*	D	2500	8144-97S, 8144-97	M	Y		10/88 ▸ 08/92	98430541	**506295**	V	
2.5 TDs	*834/FE54A/FE55C/LE54A LE55C*	D	2500	8144-97YC, 8144-97Y	M	Y		09/92 ▸ 11/94	99440930	**506297**	N	
2500 TD	*834/AE44A/AE85C/AM44A AM85C*	D	2500	8144-97S, 8144-97	A	Y		10/88 ▸ 08/92	98430541	**506295**	V	
Thesis												
2.0 i Turbo 20V	*841AXA1B0*	E	1998	841E.000	M	Y		09/02 ▸	7762926	**506516**	SS	
2.4 i 20V	*841AXB1B0*	E	2446	841D.000	M	Y		09/02 ▸	7762926	**506516**	SS	
2.4 i 20V	*841AXB1B0*	E	2446	841D.000	M	Y		09/02 ▸	7696226	**506560**	V+vv	506722
2.4 i 20V	*841AXB110*	E	2446	841D.000	A	Y		09/02 ▸	7762926	**506516**	SS	
2.4 JTD	*841AXD1B0*	D	2387	841C.000	M	Y		09/02 ▸	46515970	**506590**	SS	
2.4 JTD,2.4 JTD 20V	*841/AXE1B0/AXH110*	D	2387	841N.000, 841G.000, 841P.000/F 841M.000	M	Y		09/02 ▸	46804051	**506808**	SS	
2.4 JTD 20V	*841AXH110*	D	2387	841G.000, 841N.000	A	Y		09/03 ▸	46804051	**506808**	SS	
Y Ipsilon (95>2000)												
1.1 i	*840AE1A*	E	1108	176B2.000	M	N		04/97 ▸	71713727	**506397**	CR	
1.2 i	*840/AA/AA1A*	E	1242	840A3.000	M	N		11/95 ▸	71713727	**506397**	CR	
1.2 i 16V	*840AD1A*	E	1242	176B9.000	M	N	23 teeth	04/97 ▸	71713728	**506598**	CR	
1.2 i	*840AA1AA*	E	1242	840A3.000	A	N		11/95 ▸	71713727	**506397**	CR	
1.4 i	*840/AB1A/AC1A*	E	1370	840A2.000, 840A4.000	M	Y		11/95 ▸	46515971	**506597**	SS	
Y Ipsilon (2000>2003)												
1.2 i 16V	*840AG1A*	E	1242	188A5.000	M	N	23 teeth	09/00 ▸	55184081	**506686**	CR	
1.2 i	*840AF1A*	E	1242	188A4.000	M	N		09/00 ▸	46526243	**506640**	CR	
Y Ipsilon (2003>)												
1.2 i	*843AXA1A*	E	1242	188A4.000	M	N		10/03 ▸	55184080	**506640**	CR	
1.2 i 16V	*843AXB1A*	E	1242	188A5.000	M	N	23 teeth	10/03 ▸	55184081	**506686**	CR	
1.4 i 16V	*843AXC1A*	E	1368	843A1.000	M	N	23 teeth	10/03 ▸	55184081	**506686**	CR	
Y Ipsilon (2011>)												
1.2 GPL 8V		F	1242	169A5000	M	N		05/11 ▸	55221397	**506967**	CR	
1.2 i,1.2 i 16V	*843/AXA1A/AXB1A*	E	1242	188A4.000,188A5.000 176B9.000	M	N		04/11 ▸	55221397	**506967**	CR	
Ypsilon												
1.4 i,1.4 i 16V,1.4 i GPL	*843/AXC1A/AXC1B/AXG1A*	E	1368	350A1.000,843A1.000	M	N		10/03 ▸	55221397	**506967**	CR	
1.4 i 16V	*843AXC11*	E	1368	843A1.000	A	N		01/06 ▸	55221397	**506967**	CR	
Y10												
1.0,1.0 ie	*156/AA53A/AA53W/AD53A AE53A/AE53W*	E	999	156A2.100, 156A2.246 156A2.000	M	N		01/89 ▸ 09/92	71713727	**506397**	CR	
1.1 ie	*156/AC53A/AC53W/AG53A AG53F/AG53W/AH53A/AH53W BG53A/BH53A/CG53A*	E	1108	156C.046, 156C.000, 176B2.000	M	N		01/89 ▸ 10/95	71713727	**506397**	CR	
1.1 ie	*156/AC13A/AG13A/AH13A*	E	1108	156C.046, 176B2.000, 156C.000	A	N		11/89 ▸ 10/95	71713727	**506397**	CR	
1.3 ie	*156AF53A*	E	1297	146A5.046	M	Y		01/89 ▸ 10/95	5890406	**506063**	N	
1.3 ie	*156AB53A*	E	1301	156B.000	M	Y		01/89 ▸	5890406	**506063**	N	
Zeta												
2.0 ie 16V	*220/AO4/AO5*	E	1997	EW10J4	M	Y	20 teeth	01/01 ▸ 08/02	9670557580	**506918**	CR	
2.0 ie 16V	*220AQ4*	E	1997	EW10J4	A	Y	20 teeth	01/01 ▸ 08/02	9655043180	**506918**	CR	
2.0 ie Turbo	*220/AD5/CD5*	E	1998	RGX	M	Y		10/94 ▸ 05/00	9566945688	**506117**	CR	
2.0 ie 16V	*220AL5*	E	1998	RFV	M	Y		07/98 ▸ 12/00	9566950080	**506530**	CR	
2.0 JTD,2.0 JTD 16V	*220/AN5/AR500L*	D	1997	DW10ATED/L4, DW10ATED4	M	Y		01/00 ▸ 08/02	9569147388	**506575**	CR	

• **New** Nouveau **Nuevo** Novo **Nuovo** Nieuw **Neu** Yeni Новый Nou

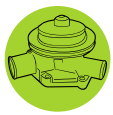

		Type Ctr.		cc						OE	Valeo		
LAND ROVER (.../...)													
Land 110 Series I - II - III (.../...)													
2.5 D	*LDH/AC7/AC8/HC7/HC8/MC7/MC8*	D	2495	12J		Y		07/84 ▸ 09/90	RTC6331	**506830**	N	
2.5 D	*LDHAC8, LDHHC7, LDHAC7, LDHMC7 LDHHC8, LDHMC8*	D	2495	12J		Y		07/84 ▸ 09/90	STC637	●**506827**	N	
2.3 D	*LDH/AG8/HG7/HG8/MG7/MG8*	D	-			Y		10/83 ▸ 1987	RTC6332	**506828**	N	
2.3 D	*LDH/AG8/HG7/HG8/MG7/MG8*	D	-			Y		10/83 ▸ 1987	RTC6331	**506830**	N	
Range Rover (70>94)													
3.5 i V8	*LHA/BL7/BL8/ML7/ML8*	E	3532	24D	M	Y		08/86 ▸ 10/89	RTC6339	**506830**	N	
3.5 V8,3.5 i V8	*LHA/BL3/BL4/ML3/ML4/MV4 MV8*	E	3532	29D, 25D	A	Y		09/86 ▸ 10/89	RTC6339	**506830**	N	
3.9 i V8	*LHA/BM3/BM4/MM4*	E	3947	36D	A	Y		10/89 ▸ 09/94	RTC6339	**506830**	N	
3.9 i V8 16V	*LHA/BM8/MM8*	E	3950	35D-185	M	Y		10/89 ▸ 09/94	RTC6339	**506830**	N	
4.2 i V8	*LHB/M33/M34*	E	4278	40D	A	Y		10/92 ▸ 09/94	RTC6339	**506830**	N	
Range Rover (2002>)													
4.2 i V8 32V		E	4196	AJ-V8-4.2	A	Y		06/05 ▸	4575902	**506913**	N	
4.4 i V8 32V		E	4394	LANDR05	A	Y		06/05 ▸	4575902	**506913**	N	
4.4 i V8 32V		E	4398	M62B44-285	A	Y		03/02 ▸ 05/05	4575902	**506913**	N	
2.9 Td6 24V		D	2926	M57D30	A	Y		03/02 ▸ 06/09	PEB000050	**506663**	vvv	
LEXUS													
GS 300 (93>97)													
3.0 i 24V	*JZS14*	E	2997	2JZ-GE-221	A	Y		1995 ▸ 1997	1610049837	**506542**	N	
GS 300 (97>2004)													
3.0 i 24V	*JZS16*	E	2997	2JZ-GE-219,2JZ-GE-221	A	Y		09/97 ▸ 2001	1611049155	**506946**	N	
3.0 i 24V	*JZS16*	E	2997	2JZ-GE-219	A	Y		2001 ▸ 2004	1611049156	**506946**	N	
IS (2005>)													
2.2 D4-D 16V	*ALE20*	D	2231	2AD-FHV	M	Y		11/05 ▸ 08/08	1610009340	**506905**	SS	
RX 300													
3.0 i V6 24V	*MCU35*	E	2995	1MZ-FE	A	Y		02/03 ▸ 01/06	1610029085	**506618**	SS	
MARUTI													
800													
0.8	*S410S, S410V, S410K*	E	796	SUZUKI-F		Y		10/87 ▸ 09/93	1740078821	**506870**	N	
MAZDA													
2 (2003>2005)													
1.25 i 16V		E	1242	DHC	M	Y		03/03 ▸ 08/05	C20115010	**506472**	N	
1.4 i 16V		E	1388	ZH14	M	Y		03/03 ▸ 08/05	C20115010	**506472**	N	
1.6 i 16V		E	1596	DURA16	M	Y		03/03 ▸ 08/05	C20115010	**506472**	N	
1.4 MZ-CD	*DD63EM*	D	1399	MZ14CD	M	Y		03/03 ▸ 08/05	Y40115010A	**506714**	CR	
2 (2007>)													
1.3 i 16V	*DE/14J2/14K2*	E	1348	MZR13 HP,MZR13 SP	M	Y		06/07 ▸ >	ZJ0115010B	▲**506973**	SS	
1.5 MZR,1.5 MZR 16V	*DE/1352/1452*	E	1498	MZR15	M	Y		06/07 ▸ >	ZJ0115010B	▲**506973**	SS	
3 (2003>2006)													
1.4 i 16V	*BK/12J2/14J2*	E	1349	MZR14	M	Y		06/03 ▸	ZJ0115010A	▲**506973**	SS	
1.6 i 16V	*BK/12Z2/14Z2*	E	1598	MZR16	M	Y		06/03 ▸	ZJ0115010A	▲**506973**	SS	
1.6 i 16V	*BK14Z5*	E	1598	MZR16	A	Y		06/03 ▸	ZJ0115010A	▲**506973**	SS	
2.0 i 16V	*BK/12F2/14F2*	E	1999	MZR20	M	Y		06/03 ▸ 05/04	LF0115100	**506694**	N	
1.6 DE 16V	*BK/1232/12Y2/1432/1462 14Y2*	D	1560	MZ16CD/FAP, MZ16CD, MZ-CD16	M	Y		06/03 ▸	Y60115010B	**506715**	CR	
6 (2002>2005)													
1.8 i 16V	*GY1982, GG/1282/1482*	E	1798	MZR18	M	Y		06/02 ▸ 02/05	LF0115100	**506694**	N	

• **New** Nouveau **Nuevo** Novo **Nuovo** Nieuw **Neu** Yeni Новый Nou

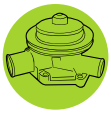

MAZDA (.../...)

6 (2002>2005) (.../...)

2.0 i 16V	GY19F6, GG/12F6/14F6	E	1999	MZR20	M	Y		06/02 ▸ 02/05	LF0115100	**506694**	N	
2.0 i 16V	GY19F6, GG/12F7/14F7	E	1999	MZR20	A	Y		06/02 ▸ 02/05	LF0115100	**506694**	N	
2.3 i 16V	GY1936, GG/1236/1436	E	2261	L3	M	Y		06/02 ▸ 02/05	LF0115100	**506694**	N	

121 (DA) (88>90)

1100	DA/1321/1322/13B2	E	1139	B1-16, B1-15	M	Y		01/88 ▸ 10/90	B63015010D	**506399**	N	
1300,1300 i	DA/1332/13B2/13C2	E	1324	B3-A6, B3-A5, B3-B1	M	Y		01/88 ▸ 10/90	B63015010D	**506399**	N	

121 (DB) (90>96)

1.1	DB12A2	E	1139	B1-21	M	Y		11/90 ▸ 10/93	B3C715010A	**506399**	N	
1.3,1.3 i	DB/12B2/12C2/12D2	E	1324	B3-D1, B3-C9, B3-D2	M	Y		11/90 ▸ 02/96	B3C715010A	**506399**	N	
1.3,1.3 i	DB/12C5/12D5	E	1324	B3-D3	A	Y		11/90 ▸ 02/96	B3C715010A	**506399**	N	

121 (JA/JB) (96>)

1.2	JATA, JBTA	E	1242	DHA	M	Y		03/96 ▸	1E0415010B	**506581**	N	
1.2	JATA, JBTA	E	1242	DHA	M	Y		03/96 ▸	1E0515010	**506472**	N	
1.2	JATA, JBTA	E	1242	DHA	A	Y		03/96 ▸	1E0415010B	**506581**	N	
1.2	JATA, JBTA	E	1242	DHA	A	Y		03/96 ▸	1E0515010	**506472**	N	
1.3	JA/SMJA/TA, JB/SMJA/TA	E	1299	J4C, JJA	M	Y		03/96 ▸	1E0415010B	**506581**	N	
1.8 D	JASMRT, JBSMRT	D	1753	RTK	M	Y		03/96 ▸	1E0715010	**506529**	SS	

323 (FA) (76>81)

1.0	FA4PS-	E	985	PC	M	Y		12/76 ▸ 05/81	032415010D	**506413**	N	
1.3	FA/4TS-/4TV-	E	1272	TC	M	Y		12/76 ▸ 05/81	032415010D	**506413**	N	
1.3	FA4TS-	E	1272	TC	A	Y		12/76 ▸ 05/81	032415010D	**506413**	N	
1.4	FA4US-	E	1415	UC	M	Y		05/78 ▸ 05/81	032415010D	**506413**	N	
1.4	FA4US-	E	1415	UC	A	Y		05/78 ▸ 05/81	032415010D	**506413**	N	

323 (BD) (80>85)

1.1	BD/1011/1012/1211/1301/1311/1411	E	1071	E1	M	Y		08/80 ▸ 08/84	E30115010B	**506424**	N	
1.3	BD/1031/1032/1221/1222/1231/1232 1321/1322/1331/1332/1421/1422/1431 1432	E	1296	E3	M	Y		08/80 ▸ 08/84	E30115010B	**506424**	N	
1.3	BD/1031/1233/1323/1333/1433	E	1296	E3	A	Y		08/80 ▸ 08/84	E30115010B	**506424**	N	
1.5	BD/1051/1052/1241/1242/1252/1341 1342/1352/1442/1452	E	1490	E5-HP, E5	M	Y		08/80 ▸ 08/84	E30115010B	**506424**	N	
1.5	BD/1051/1052/1243/1343/1443	E	1490	E5	A	Y		08/80 ▸ 08/84	E30115010B	**506424**	N	
1.5		E	1498	B5	M	Y		09/82 ▸ 08/84	E30115010B	**506424**	N	

323 (BF) (85>89)

1.3	BF/1251/1252/1451/1452	E	1296	E3	M	Y		01/85 ▸ 1987	B63015010D	**506399**	N	
1.3	BF/1353/1453	E	1296	E3	A	Y		01/85 ▸ 1987	B63015010D	**506399**	N	
1.3	BF/12B2/13B2/14B2	E	1324	B3-84	M	Y		09/87 ▸ 1989	B63015010D	**506399**	N	
1.3	BF14B3	E	1324	B3-84	A	Y		09/87 ▸ 1989	B63015010D	**506399**	N	
1.5	BF/1261/1262/1462	E	1490	E5	M	Y		01/85 ▸ 1987	B63015010D	**506399**	N	
1.5	BF1463	E	1490	E5	A	Y		01/85 ▸ 1987	B63015010D	**506399**	N	
1.5	BF/12C2/14C2	E	1498	B5	M	Y		09/87 ▸ 1989	B63015010D	**506399**	N	
1.5	BF13C2	E	1498	B5	A	Y		09/87 ▸ 1989	B63015010D	**506399**	N	
1.6,1.6 i Turbo	BF/1282/1382/8312	E	1598	B6T, B6	M	Y		07/85 ▸ 1989	B63015010D	**506399**	N	
1.6 i Turbo	BF1312	E	1598	B6T	M	Y		01/86 ▸ 1989	8AB515010A	**506401**	N	

323 (BG) (89>94)

1.3	BG/1222/12C2/1322/13C2	E	1324	B3-86, B3-84	M	Y		06/89 ▸	B63015010D	**506399**	N	
1.3	BG/1223/12B3/1323/13B3	E	1324	B3-84, B3-85, B3-87	A	Y		06/89 ▸	B63015010D	**506399**	N	
1.6	BG/1242/12E2/1342/13E2/1442/14E2	E	1598	B6I, B6	M	Y		06/89 ▸	B63015010D	**506399**	N	
1.6	BG/1243/1443/14E5	E	1598	B6I, B6	A	Y		06/89 ▸	B63015010D	**506399**	N	
1.8,1.8 i,1.8 i Turbo	BG/1372/13G2/1472/14G2 8362/83H2/83J2	E	1840	BP, BPT, BP-TH, MAZDA01	M	Y		06/89 ▸	8AB815010	**506401**	N	

323 (BA) (94>96)

1.3 i	BA/1232/1332	E	1324	B3-C9	M	Y		06/94 ▸ 09/96	B3C715010A	**506399**	N	
1.5 i	BA/1252/1352/1452	E	1489	Z5	M	Y		06/94 ▸ 09/96	8AB5-15-010A	**506401**	N	
1.5 i	BA/1255/1355	E	1489	Z5	A	Y		06/94 ▸ 09/96	8AB5-15-010A	**506401**	N	

• **New** Nouveau **Nuevo** Novo **Nuovo** Nieuw **Neu** Yeni Новый Nou

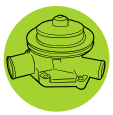

Valeo

Water pump
Pompe à eau
Bomba de água
Bomba de água
Pompa acqua
Waterpomp
Wasserpumpen
Pompa wodna
Vízpumpa
Su pompasi
ВОДЯНОЙ НАСОС
Vodní pumpa
Pompa de apă

Type Ctr.		cc						OE	Valeo		
MAZDA (.../...)											
323 (BA) (94>96) (.../...)											
1.5 i	*BA/1252/1352/1452*	E	1489	Z5	M	Y		06/94 ▸ 07/95	8ABB15010A	**506948**	N
1.5 i	*BA/1255/1355*	E	1489	Z5	A	Y		06/94 ▸ 09/96	8AB8-15-010	**506948**	N
1.8 i 16V	*BA/12P2/13P2/14P2*	E	1840	BP-ZE	M	Y		08/94 ▸ 09/96	8AB15010A	**506401**	N
1.8 i 16V	*BA/12P5/13P5/14P5*	E	1840	BP-ZE	A	Y		08/94 ▸ 09/96	8AB15010A	**506401**	N
1.8 i 16V	*BA/12P2/13P2/14P2*	E	1840	BP-ZE	M	Y		08/94 ▸ 09/96	8ABB15010A	**506948**	N
1.8 i 16V	*BA/12P5/13P5/14P5*	E	1840	BP-ZE	A	Y		08/94 ▸ 09/96	8ABB15010A	**506948**	N
2.0 i V6	*BA14F2*	E	1995	KF	M	Y		10/94 ▸ 09/96	8AK215010	**506548**	N
2.0 i V6	*BA14F5*	E	1995	KF	A	Y		10/94 ▸ 09/96	8AK215010	**506548**	N
323 (BA) (96>98)											
1.3 i 16V	*BA/1232/1532*	E	1324	B3-ME	M	Y		10/96 ▸ 06/98	B3C715010A	**506399**	N
1.6 i	*BA1262*	E	1598	B6-DA	M	Y		02/97 ▸ 06/98	8AB15010A	**506401**	N
1.6 i	*BA1265*	E	1598	B6-DA	A	Y		02/97 ▸ 06/98	8AB15010A	**506401**	N
1.6 i	*BA1262*	E	1598	B6-DA	M	Y		02/97 ▸ 06/98	8ABB15010A	**506948**	N
1.6 i	*BA1265*	E	1598	B6-DA	A	Y		02/97 ▸ 06/98	8ABB15010A	**506948**	N
1.8 i 16V	*BA/12P2/13P2*	E	1840	BP-ZE	M	Y		10/96 ▸ 06/98	8AB15010A	**506401**	N
1.8 i 16V	*BA/12P5/13P5*	E	1840	BP-ZE	A	Y		10/96 ▸ 06/98	8AB15010A	**506401**	N
1.8 i 16V	*BA/12P2/13P2*	E	1840	BP-ZE	M	Y		10/96 ▸ 06/98	8ABB15010A	**506948**	N
1.8 i 16V	*BA/12P5/13P5*	E	1840	BP-ZE	A	Y		10/96 ▸ 06/98	8ABB15010A	**506948**	N
323 (BJ) (98>2000)											
1.3 i 16V	*BJ1432*	E	1324	B3-BJ	M	Y		08/98 ▸ 09/00	B3C715010A	**506399**	N
1.5 i 16V	*BJ14L2*	E	1498	ZL	M	Y		08/98 ▸ 09/00	8AB15010A	**506401**	N
1.5 i 16V	*BJ14L5*	E	1498	ZL	A	Y		08/98 ▸ 09/00	8AB15010A	**506401**	N
1.8 i 16V	*BJ14P2*	E	1840	FP-18	M	Y		08/98 ▸ 09/00	FP0115010G	**506536**	N
1.8 i 16V	*BJ14P5*	E	1840	FP-18	A	Y		08/98 ▸ 09/00	FP0115010G	**506536**	N
323 (BJ) (2000>2003)											
1.3 i 16V	*BJ/1242/1342*	E	1324	B3-ME	M	Y		10/00 ▸ 10/03	B3C715010A	**506399**	N
2.0 i 16V	*BJ13S2*	E	1991	FS-7	M	Y		10/00 ▸ 10/03	FS0115010F	**506536**	N
2.0 i 16V	*BJ13S5*	E	1991	FS-7	A	Y		10/00 ▸ 10/03	FS0115010F	**506536**	N
323 Wagon (BW) (86>93)											
1.3	*BW/1241/1242/1251/1252*	E	1296	E3-91, E3-93	M	Y		01/86 ▸ 12/87	8ABT15010A	**506424**	N
1.5	*BW/1262/1263*	E	1490	E5-K4, E5-H5	M	Y		01/86 ▸ 12/87	8ABT15010A	**506424**	N
1.5	*BW1263*	E	1490	E5-J9	A	Y		01/86 ▸ 12/87	8ABT15010A	**506424**	N
1.5	*BW/12C2/12J2*	E	1498	B5-05, B5-05C	M	Y		09/89 ▸	B63015010D	**506399**	N
1.5	*BW12J5*	E	1498	B5-05C	A	Y		09/89 ▸ 08/93	B63015010D	**506399**	N
1.6,1.6 i	*BW/12/1272/8272*	E	1598	B6-82, B6-5M, B6-88	M	Y		06/86 ▸	B63015010D	**506399**	N
1.6	*BW1273*	E	1598	B6-89	A	Y		06/86 ▸ 06/87	B63015010D	**506399**	N
626 (GC) (82>87)											
1600	*GC/1211/1212/1411/1412/1612*	E	1587	F6	M	Y		11/82 ▸ 1987	8AG115010B	**506685**	CR
1600	*GC/1213/1413/1613*	E	1587	F6	A	Y		11/82 ▸ 1987	8AG115010B	**506685**	CR
2000 i	*GC/1242/1442/1642*	E	1998	FE-EGI	M	Y		08/83 ▸ 1987	8AG115010B	**506685**	CR
2000	*GC1223*	E	1998	FE	A	Y		11/82 ▸ 1987	RF0315010B	**506880**	CR
2000 D	*GC/1232/1431/1432*	D	1998	RF	M	Y		03/84 ▸ 1987	8AG115010B	**506685**	CR
626 (GD) (87>92)											
1.6	*GD/1282/1482*	E	1587	F6-83	M	Y		10/87 ▸ 01/92	8AK115010A	**506400**	CR
1.8	*GD/1212/1292/1412/1492*	E	1789	F8, F8-K9	M	Y		10/87 ▸ 01/92	8AK115010A	**506400**	CR
1.8	*GD/1214/1294/1414/1494*	E	1789	F8, F8-K8	A	Y		10/87 ▸ 01/92	8AK115010A	**506400**	CR
2.0,2.0 i	*GD/1232/12D2/1432/14D2 1632/16D2*	E	1998	FE-GA, FE-FK, FE-90	M	Y		10/87 ▸ 01/92	8AK115010A	**506400**	CR
2.0,2.0 i	*GD/1234/12D4/1434/14D4 1634*	E	1998	FE-90, FE-GB, FE-FJ, FE-FK	A	Y		10/87 ▸ 01/92	8AK115010A	**506400**	CR
2.2 i	*GD/12H2/14H2/16H2/72H2/74H2/76H2 82H2/84H2*	E	2184	F2-G4, F2-G2, F2-G7	M	Y		08/89 ▸ 01/92	8AK115010A	**506400**	CR
2.2 i	*GD/12H4/14H4/16H4*	E	2184	F2-G4, F2-G3	A	Y		08/89 ▸ 01/92	8AK115010A	**506400**	CR
626 (GE) (91>97)											
1.8 i 16V	*GE/12A2/14A2*	E	1840	FP-01, FP-16	M	Y		08/91 ▸	FP0115010G	**506536**	N
1.8 i 16V	*GE/12A5/14A5*	E	1840	FP-01	A	Y		09/91 ▸ 05/94	FP0115010G	**506536**	N

• **New** Nouveau **Nuevo** Novo **Nuovo** Nieuw **Neu** Yeni Новый Nou

Valeo

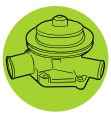

		Type Ctr.		cc					OE	Valeo		
MAZDA (.../...)												
626 (GE) (91>97) (.../...)												
2.0 i 16V	*1Y/ZGE1, GE/12J2/14J2 86J2*	E	1991	FS-84, FS-31	M	Y		08/91 ▸	FS0115010F	**506536**	N	
2.0 i 16V	*GE/12J5/14J5*	E	1991	FS-83	A	Y		09/91 ▸	FS0115010F	**506536**	N	
2.5 i	*GE/14F2/74F2*	E	2497	KL-21	M	Y		09/91 ▸	8AK215010	**506548**	N	
2.5 i	*GE14F5*	E	2497	KL-22	A	Y		09/91 ▸	8AK215010	**506548**	N	
626 (GF) (97>99)												
1.8 i 16V	*GF/12P2/14P2*	E	1840	FP	M	Y		06/97 ▸	FP0115010G	**506536**	N	
2.0 i 16V	*GF/12F2/14F2/14S2*	E	1991	FS-136, FS-115	M	Y		06/97 ▸	FS0115010F	**506536**	N	
2.0 i 16V	*GF/12F5/14F5/14S5*	E	1991	FS-136, FS-115	A	Y		06/97 ▸	FS0115010F	**506536**	N	
626 (GF) (99>2002)												
1.8 i 16V	*GF/12P2/14P2*	E	1840	FP	M	Y		10/99 ▸ 05/02	FP0115010G	**506536**	N	
2.0 i 16V	*GF/12F2/14F2/14S2*	E	1991	FS-136, FS-115	M	Y		06/00 ▸ 05/02	FP0115010G	**506536**	N	
2.0 i 16V	*GF/12F5/12S5/14F5/14S5*	E	1991	FS-115, FS-136	A	Y		09/00 ▸ 05/02	FP0115010G	**506536**	N	
626 (GV) (88>92)												
1800 ▸ 202565	*GV/1212/1292*	E	1789	F8-K9	M	Y		10/88 ▸	8AK115010A	**506400**	CR	
2000,2000 i 202565 ▸	*GV/1232/12D2*	E	1998	FE-GA, FE-FJ	M	Y		10/88 ▸	8AK115010A	**506400**	CR	
2000 ▸ 202565	*GV1234*	E	1998	FE-FK	A	Y		10/88 ▸	8AK115010A	**506400**	CR	
2200 i 202565 ▸ 202565	*GV/12H2/72H2*	E	2184	F2-L1, F2-G2	M	Y		10/88 ▸	8AK115010A	**506400**	CR	
626 (GV) (92>97)												
2.0 i	*GV12D2*	E	1998	FE-Y8	M	Y		03/92 ▸	8AK115010A	**506400**	CR	
2.2 i	*GV/12H2/82H2*	E	2184	F2-Y4, F2-G6	M	Y		03/92 ▸	8AK115010A	**506400**	CR	
2.2 i	*GV12H5*	E	2184	F2-M2	A	Y		03/92 ▸	8AK115010A	**506400**	CR	
626 (GW) (97>99)												
1.8 i 16V	*GW14P2*	E	1840	FP	M	Y		11/97 ▸	FP0115010G	**506536**	N	
2.0 i 16V	*GW14S2*	E	1991	FS-115, FS-136	M	Y		11/97 ▸	FS0115010F	**506536**	N	
2.0 i 16V	*GW14S5*	E	1991	FS-115, FS-136	A	Y		11/97 ▸	FS0115010F	**506536**	N	
626 (GW) (99>2002)												
1.8 i 16V	*GW14P2*	E	1840	FP	M	Y		10/99 ▸ 05/02	FP0115010G	**506536**	N	
2.0 i 16V	*GW14S2*	E	1991	FS-115, FS-136	M	Y		06/00 ▸ 05/02	FS0115010F	**506536**	N	
2.0 i 16V	*GW14S5*	E	1991	FS-136, FS-115	A	Y		09/00 ▸ 05/02	FS0115010F	**506536**	N	
818												
1.3	*STC-DC*	E	1272	STC	A	Y		10/75 ▸ 09/78	032415010D	**506413**	N	
1.3	*ST/C/C-DC/C-DX/C-SC/CV-D*	E	1272	STC		Y		10/75 ▸ 09/78	032415010D	**506413**	N	
929 (HC) (86>91)												
2000	*HC1212*	E	1998	FE	M	Y		10/84 ▸ 1987	8AK115010A	**506400**	CR	
2200,2200 i	*HC/1222/1232/12C2*	E	2184	F2, F2-C, F2-EGI	M	Y		09/86 ▸ 1992	8AK115010A	**506400**	CR	
2200,2200 i	*HC/1224/1234*	E	2184	F2-EGI, F2	A	Y		09/86 ▸ 1992	8AK115010A	**506400**	CR	
3000 i	*HC/1124/1242/12D2*	E	2954	JE, JE-C	M	Y		09/86 ▸ 1992	8AH315010B	**506626**	N	
3000 i	*HC12D5*	E	2954	JE-C	A	Y		09/89 ▸ 1992	8AH315010B	**506626**	N	
Demio												
1.3 i	*DW/1/1922/1932*	E	1324	B3-2EN, B3-2EL, B3-2E B3-2ELP	M	Y		05/98 ▸	B3C715010A	**506399**	N	
1.5 i		E	1498	ZL-75	M	Y		04/00 ▸ 03/03	B3C715010A	**506399**	N	
1.5 i		E	1498	ZL-75	A	Y		04/00 ▸ 03/03	B3C715010A	**506399**	N	
MPV												
2.0 i 16V	*LW19F2*	E	1991	FS-D	M	Y		06/99 ▸	FS0115010F	**506536**	N	
2.3 i 16V	*LW1932*	E	2261	L3	M	Y		03/02 ▸	LF0115100	**506694**	N	
3.0 V6	*LV12E2*	E	2954	JE-96	M	Y		06/96 ▸ 10/99	8AL415010A	**506611**	N	
3.0 V6	*LV12J5*	E	2954	JE-96	A	Y		06/96 ▸ 10/99	8AL415010A	**506611**	N	

• **New** Nouveau **Nuevo** Novo **Nuovo** Nieuw **Neu** Yeni Новый Nou

Type Ctr.	cc					2+3	OE	Valeo		
MAZDA (.../...)										
MPV (.../...)										
2.5 TD *LV12L2*	D	2499	WL-01	M	Y		12/95 ▸ 10/99	8ALA15100A	**506898**	N
MX3										
1.6 i,1.6 i 16V *EC/13A2/13C2*	E	1598	B6-9J, B6-16V	M	Y		03/91 ▸ 02/98	8AB15010A	**506401**	N
1.6 i *EC13C5*	E	1598	B6-9K	A	Y		03/91 ▸ 01/94	8AB15010A	**506401**	N
1.6 i,1.6 i 16V *EC/13A2/13C2*	E	1598	B6-16V,B6-9J	M	Y		03/91 ▸ 02/98	8ABB15010A	**506948**	N
1.6 i *EC13C5*	E	1598	B6-9K	A	Y		03/91 ▸ 01/94	8ABB15010A	**506948**	N
1.8 i V6 *EC13B2*	E	1845	K8-19	M	Y		03/91 ▸	8AK215010	**506548**	N
MX5 (NA) (90>98)										
1.6 i *NA/18B2/18C2*	E	1598	B6-ZE, B6-9J	M	Y		04/90 ▸ 02/98	8AB15010A	**506401**	N
1.6 i *NA/18B2/18C2*	E	1598	B6-9J,B6-ZE	M	Y		04/90 ▸ 02/98	8ABB15010A	**506948**	N
1.8 i *NA18P2*	E	1840	BP-F1	M	Y		09/93 ▸ 02/98	8AB15010A	**506401**	N
1.8 i *NA18P2*	E	1840	BP-F1	M	Y		09/93 ▸ 02/98	8ABB15010A	**506948**	N
MX5 (NB) (98>2000)										
1.6 i 16V *NB1862*	E	1598	B6-4J	M	Y		03/98 ▸ 08/00	8AB15010A	**506401**	N
1.6 i 16V *NB1565*	E	1598	B6-4J	A	Y		03/98 ▸ 08/00	8ABB15010A	**506948**	N
1.8 i 16V *NB/18P2/18P6*	E	1840	BP-ZE	M	Y		03/98 ▸ 08/00	8AB15010A	**506401**	N
1.8 i 16V	E	1840	BP,BP-ZE	A	Y		03/98 ▸ 08/00	8ABB15010A	**506948**	N
MX5 (2000>)										
1.6 i 16V *NB1862*	E	1598	B6-4J	M	Y		09/00 ▸	8AB15010A	**506401**	N
1.6 i 16V *NB1865*	E	1598	B6-4J	A	Y		09/00 ▸ 03/05	8ABB15010A	**506948**	N
1.8 i 16V *NB/18P2/18P6*	E	1840	BP-5C	M	Y		09/00 ▸	8AB15010A	**506401**	N
1.8 i 16V *NB18P5*	E	1840	BP-5C	A	Y		09/00 ▸ 03/05	8ABB15010A	**506948**	N
MX6										
2.0 i *GE16J2*	E	1991	FS-19	M	Y		07/91 ▸ 08/97	FS0115010F	**506536**	N
2.0 i *GE16J5*	E	1991	FS-19	A	Y		09/91 ▸ 03/93	FS0115010F	**506536**	N
2.5 i V6 *GE/16F2/76F2*	E	2497	KL-19	M	Y		07/91 ▸ 08/97	8AK215010	**506548**	N
2.5 i V6 *GE16F5*	E	2497	KL-20	A	Y		09/91 ▸ 08/97	8AK215010	**506548**	N
Premacy (99>2001)										
1.8 i 16V *CP/19/19F2*	E	1840	FP, FP-18	M	Y		06/99 ▸	FP0115010G	**506536**	N
1.8 i 16V *CP19*	E	1840	FP-18	A	Y		06/99 ▸	FP0115010G	**506536**	N
Premacy (2001>)										
1.8 i 16V *CP19F2*	E	1840	FP-E1	M	Y		07/01 ▸ 08/05	FP0115010G	**506536**	N
2.0 i 16V *CP19S2*	E	1991	FS-7E	M	Y		07/01 ▸ 08/05	FS0115010F	**506536**	N
2.0 i 16V *CP19S5*	E	1991	FS-7G	A	Y		07/01 ▸ 08/05	FS0115010F	**506536**	N
Tribute										
2.0 i 16V *CU/06B/07B/08B/0SB*	E	1989	YF	M	Y		01/00 ▸ 12/03	YF0915100	**506604**	N
Xedos 6										
2.0 i V6 *CA12B2*	E	1995	K8-ZE20	M	Y		10/91 ▸ 11/99	8AK215010	**506548**	N
2.0 i V6 *CA12B5*	E	1995	K8-ZE20	A	Y		10/91 ▸ 03/99	8AK215010	**506548**	N
Xedos 9										
2.0 i *TA12F2*	E	1995	K8-ZE20	M	Y		10/93 ▸ 08/00	8AK215010	**506548**	N
2.5 i *TA/12L2/72L2*	E	2497	K8-ZE25	M	Y		10/93 ▸ 08/00	8AK215010	**506548**	N
2.5 i *TA/12L5/72L5*	E	2497	K8-ZE25	A	Y		10/93 ▸ 08/00	8AK215010	**506548**	N
MAZDA										
B Pick-up (71>89)										
2.6 *UF*	E	2555	4G54	M	Y		01/87 ▸ 10/89	8BU115010	**506689**	N
B Pick-up (89>99)										
1.6 *UF1Y12*	E	1587	F6-91	M	Y		11/89 ▸	8AG115010B	**506685**	CR
2.0 *UF/1U22/1Y22*	E	1998	FE-CL	M	Y		11/89 ▸	8AG115010B	**506685**	CR

• **New** Nouveau **Nuevo** Novo **Nuovo** Nieuw **Neu** Yeni Новый Nou

Valeo

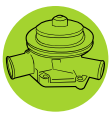

Type Ctr.		cc						OE	Valeo		
MAZDA (.../...)											
B Pick-up (89>99) (.../...)											
2.2 i *UF/1UF2/1YF2*	E	2184	F2-L8	M	Y		08/91 ▸ 01/99	8AK115010A	**506400**	CR	
E Fourgon (87>)											
2.0,2.0 i *SD/1A22/1AC2/1B22/1BC2 1C22/1CC2/1D22/1DC2, SR 1J22/1JC2/1L22/1LC2/1M22 8J22/8JC2/8L22/8LC2*	E	1998	FE-BN, FE-EP, FE-CK, FE-JM	M	Y		12/87 ▸	8AK115010A	**506400**	CR	
MERCEDES											
190 (201)											
2.0 *201.022*	E	1997	102.921, 102.938	M	Y		12/82 ▸ 1989	1022004201	**506095**	N	
2.0 *201.023*	E	1997	102.924	M	Y		12/82 ▸ 1993	1022005001	**506639**	N	
2.0 *201.023*	E	1997	102.924	A	Y		12/82 ▸ 1993	1022005001	**506639**	N	
2.3 i 16S *201.034*	E	2299	102.983	M	Y		08/84 ▸ 1989	1022005001	**506639**	N	
2.3 i 16S *201.034*	E	2299	102.983	A	Y		08/84 ▸ 1989	1022005001	**506639**	N	
2.0 D *201.122*	D	1997	601.911	M	Y		12/83 ▸ 1993	6012000920	**506078**	N	
2.0 D *201.122*	D	1997	601.911	A	Y		12/83 ▸ 1993	6012000920	**506078**	N	
2.0 D *201.122*	D	1997	601.911		Y		12/83 ▸ 1993	6012000920	**506078**	N	
2.5 D Turbo *201.128*	D	2497	602.961	A	Y		07/86 ▸ 1993	6022000520	**506060**	N	
2.5 D Turbo *201.128*	D	2497	602.961		Y		07/86 ▸ 1993	6022000520	**506060**	N	
200/300 (123)											
200 *123.020*	E	1988	115.938/39	M	Y		01/76 ▸ 07/80	1102001720	**506100**	N	
230,230T *123/.000/.083*	E	2307	115.954	M	Y		01/76 ▸ 02/81	1022005001	**506639**	N	
230,230C *123/.023/.043*	E	2307	115.954	M	Y		01/76 ▸ 02/81	1102001720	**506100**	N	
250,250L,250T *123/.003/.026/.028/.086*	E	2525	123.921, 123.920	M	Y		01/76 ▸ 1985	1102001920	**506097**	N	
250L *123.028*	E	2525	123.921, 123.920	A	Y		01/76 ▸ 1985	1102001920	**506097**	N	
280,280C,280CE i,280E 280EL i,280TE i *123/.007/.030/.050/.053 .093*	E	2746	110.984, 110.923	M	Y		01/76 ▸ 1985	1102001920	**506097**	N	
280,280C,280CE i *123/.030/.050/.053*	E	2746	110.923, 110.984	A	Y		01/76 ▸ 07/81	1102001920	**506097**	N	
280CE i,280E i *123/.033/.053*	E	2749	110.988	M	Y		01/76 ▸ 07/85	1102001920	**506097**	N	
280CE i,280E i *123/.033/.053*	E	2749	110.988	A	Y		01/76 ▸ 07/85	1102001920	**506097**	N	
200D D *123.120*	D	1998	615.940	M	Y		01/76 ▸ 1985	1102001720	**506100**	N	
200D D *123.120*	D	1998	615.940	A	Y		01/76 ▸ 1985	1102001720	**506100**	N	
220D D *123.126*	D	2197	615.941	M	Y		01/76 ▸ 1979	1102001720	**506100**	N	
220D D *123.126*	D	2197	615.941	A	Y		01/76 ▸ 1979	1102001720	**506100**	N	
240D D,240DL D,240TD D *123/.102/.103/.123/.125 .183*	D	2404	616.912	M	Y		01/76 ▸ 1985	1152001520	**506100**	N	
240D D,240DL D *123/.102/.103/.123/.125*	D	2404	616.912	A	Y		01/76 ▸ 1985	1152001520	**506100**	N	
300D D,300DL D,300TD D 300TD TD *123/.105/.130/.132/.190 .193*	D	2998	617.912, 617.952	M	Y		01/76 ▸ 1985	1152001520	**506100**	N	
300D D,300D TD,300DL D *123/.105/.130/.133*	D	2998	617.912, 617.952	A	Y		01/76 ▸ 1985	1152001520	**506100**	N	
200/300 (124)											
200,200 CE i,200E i,200T 200TE i *124/.020/.021/.041/.080 .081*	E	1997	102.963, 102.922	M	Y		12/84 ▸ 09/92	1022005001	**506639**	N	
200,200 CE i,200E i,200T 200TE i *124/.020/.021/.041/.080 .081*	E	1997	102.922, 102.963	A	Y		12/84 ▸ 09/92	1022005001	**506639**	N	
200 CE i,200E i,200TE i *124/.019/.040/.079*	E	1998	111.940	M	Y		10/92 ▸ 06/93	1112000401	**506306**	N	
200 CE i,200E i,200TE i *124/.019/.040/.079*	E	1998	111.940	A	Y		10/92 ▸ 06/93	1112000401	**506306**	N	
220 CE i *124.042*	E	2199	111.960	M	Y		10/92 ▸ 06/93	1112000401	**506306**	N	
220 CE i *124.042*	E	2199	111.960	A	Y		10/92 ▸ 06/93	1112000401	**506306**	N	
230 CE i,230E i,230TE i *124/.023/.043/.083*	E	2299	102.982	M	Y		12/84 ▸ 09/92	1022005001	**506639**	N	
230 CE i,230E i,230TE i *124/.023/.043/.083*	E	2299	102.982	A	Y		12/84 ▸ 09/92	1022005001	**506639**	N	
260E i *124/.026/.027/.226*	E	2599	103.943, 103.940	M	Y		01/85 ▸ 09/92	1032001601	**506061**	N	
260E i *124/.026/.027/.226*	E	2599	103.943, 103.940	A	Y		06/85 ▸ 09/92	1032001601	**506061**	N	
260E i *124/.026/.226*	E	2599	103.940, 103.943		Y		01/85 ▸ 09/92	1032001601	**506061**	N	
280EL i *124.029*	E	2799	104.942	M	Y			1042004701	**506305**	N	
280EL i *124.029*	E	2799	104.942	A	Y			1042004701	**506305**	N	
300E i,300TE i *124/.031/.091*	E	2962	104.980	M	Y			1042002901	**506380**	N	

• **New** Nouveau **Nuevo** Novo **Nuovo** Nieuw **Neu** Yeni Новый Nou

Type Ctr.	cc					OE	Valeo		
MERCEDES (.../...)									
200/300 (124) (.../...)									
300 CE i,300E i,300TE i *124/.030/.050/.090/.230 .290*	E	2962	103.985, 103.983, 103.980	M	Y		03/85 ▸ 06/93	1032001601	**506061**	N	
300 CE i *124/.051/.061*	E	2962	104.980	M	Y		07/89 ▸ 06/93	1042003101	**506628**	N	
300E i,300TE i *124/.031/.091*	E	2962	104.980	A	Y			1042002901	**506380**	N	
300 CE i,300E i,300TE i *124/.030/.050/.090/.230 .290*	E	2962	103.985, 103.983	A	Y		03/85 ▸ 06/93	1032001601	**506061**	N	
300 CE i *124/.051/.061*	E	2962	104.980	A	Y		09/89 ▸ 06/93	1042003101	**506628**	N	
300E i *124.230*	E	2962	103.985		Y		11/86 ▸ 09/92	1032001601	**506061**	N	
320 CE i *124.052*	E	3199	104.992	M	Y		10/92 ▸ 06/93	1042004701	**506305**	N	
320 CE i *124.052*	E	3199	104.992	M	Y		10/92 ▸ 06/93	1042004501	**506535**	N	
320 CE i *124.052*	E	3199	104.992	A	Y		10/92 ▸ 06/93	1042004701	**506305**	N	
320 CE i *124.052*	E	3199	104.992	A	Y		10/92 ▸ 06/93	1042004501	**506535**	N	
400E i *124.034*	E	4196	119.975	A	Y		▸ 06/93	1192002101	**506632**	N	
400E i *124.034*	E	4196	119.975	A	Y		10/92 ▸	1192001501	**506444**	N	
500E i *124.036*	E	4973	119.974	A	Y		▸ 06/93	1192002101	**506632**	N	
500E i *124.036*	E	4973	119.974	A	Y		06/90 ▸	1192001501	**506444**	N	
200D D,200TD D *124/.120/.180*	D	1997	601.912	M	Y		12/84 ▸ 06/93	6012000920	**506078**	N	
200D D,200TD D *124/.120/.180*	D	1997	601.912	A	Y		12/84 ▸ 06/93	6012000920	**506078**	N	
250D TD,250TD D,250TD TD *124/.128/.185/.188*	D	2497	602.912, 602.962	M	Y			6022000520	**506060**	N	
250D D,250DL D *124/.125/.127*	D	2497	602.912	M	Y		12/84 ▸ 06/93	6012000920	**506078**	N	
250D TD,250TD D,250TD TD *124/.128/.185/.188*	D	2497	602.912, 602.962	A	Y			6022000520	**506060**	N	
250D D,250DL D,250TD D *124/.125/.127/.185*	D	2497	602.912	A	Y		12/84 ▸ 06/93	6012000920	**506078**	N	
300D D,300TD D *124/.130/.190/.330*	D	2996	603.913, 603.912	M	Y		12/84 ▸ 06/93	6022000520	**506060**	N	
300TD D *124.190*	D	2996	603.912	M	Y		03/86 ▸ 06/93	6012000920	**506078**	N	
300D D,300D TD,300TD D 300TD TD *124/.130/.133/.190/.193 .330/.333/.393*	D	2996	603.963, 603.912, 603.960 603.913	A	Y		12/84 ▸ 06/93	6022000520	**506060**	N	
300TD D *124.190*	D	2996	603.912	A	Y		03/86 ▸ 06/93	6012000920	**506078**	N	
A Class (168) (97>2003)									
A140 i *168/.031/.131*	E	1397	166.940	M	Y			1662000720	**506678**	N	
A140 i *168.031*	E	1397	166.940	M	Y		05/97 ▸	1662000520	**506593**	N	
A140 i *168/.031/.131*	E	1397	166.940	A	Y			1662000720	**506678**	N	
A140 i *168.031*	E	1397	166.940	A	Y		10/97 ▸	1662000520	**506593**	N	
A160 i *168/.033/.133*	E	1598	166.960	M	Y			1662000720	**506678**	N	
A160 i *168.033*	E	1598	166.960	M	Y		05/97 ▸	1662000520	**506593**	N	
A160 i *168/.033/.133*	E	1598	166.960	A	Y			1662000720	**506678**	N	
A160 i *168.033*	E	1598	166.960	A	Y		10/97 ▸	1662000520	**506593**	N	
A190 i *168/.032/.132*	E	1898	166.990	M	Y		04/99 ▸	1662000720	**506678**	N	
A190 i *168/.032/.132*	E	1898	166.990	A	Y		04/99 ▸	1662000720	**506678**	N	
A210 i *168/.035/.135*	E	2084	166.995	M	Y		01/02 ▸	1662000720	**506678**	N	
A210 i *168/.035/.135*	E	2084	166.995	A	Y		01/02 ▸	1662000720	**506678**	N	
A170CDI CDI *168.008*	D	1689	668.940	M	Y		05/98 ▸	1662000420	**506593**	N	
A160CDI CDI,A170CDI CDI *168/.006/.007/.008/.009 .109*	D	1689	668.940, 668.942, 668.941	M	Y		05/98 ▸	1662000720	**506678**	N	
A170CDI CDI *168.008*	D	1689	668.940	A	Y		05/98 ▸	1662000420	**506593**	N	
A160CDI CDI,A170CDI CDI *168/.006/.007/.008/.009 .109*	D	1689	668.941, 668.940, 668.942	A	Y		05/98 ▸	1662000720	**506678**	N	
A Class (169) (2004>2008)									
A150 i *169/.031/.331*	E	1498	266.920	M	Y		07/04 ▸ 03/08	6402000301	**506899**	N	
A150 i *169/.031/.331*	E	1498	266.920	A	Y		07/04 ▸ 03/08	6402000301	**506899**	N	
A170 i *169/.032/.332*	E	1699	266.940	M	Y		07/04 ▸ 03/08	6402000301	**506899**	N	
A170 i *169/.032/.332*	E	1699	266.940	A	Y		07/04 ▸ 03/08	6402000301	**506899**	N	
A200 i *169/.033/.034/.333/.334*	E	2034	266.960,266.980	M	Y		07/04 ▸ 03/08	6402000301	**506899**	N	
A200 i *169/.033/.034/.333/.334*	E	2034	266.960,266.980	A	Y		07/04 ▸ 03/08	6402000301	**506899**	N	
A160CDI CDi,A180CDI CDi A200CDI CDi *169/.006/.007/.008/.306 .307/.308*	D	1991	640.940,640.941,640.942	M	Y		07/04 ▸ 03/08	6402000301	**506899**	N	
A160CDI CDi,A180CDI CDi A200CDI CDi *169/.006/.007/.008/.306 .307/.308*	D	1991	640.940,640.941,640.942	A	Y		07/04 ▸ 03/08	6402000301	**506899**	N	
A Class (169) (2008>)									
1.5 i *169/.031/.331*	E	1498	266.920	M	Y		04/08 ▸	6402000301	**506899**	N	
1.5 i *169/.031/.331*	E	1498	266.920	A	Y		04/08 ▸	6402000301	**506899**	N	

• **New** Nouveau **Nuevo** Novo **Nuovo** Nieuw **Neu** Yeni Новый Nou

Valeo

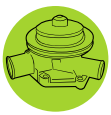

Type Ctr.		CC						OE	Valeo		

MERCEDES (.../...)

A Class (169) (2008>) (.../...)

1.7 i	169/.032/.332	E	1699	266.940	M	Y		04/08 ▸	6402000301	**506899**	N	
1.7 i	169/.032/.332	E	1699	266.940	A	Y		04/08 ▸	6402000301	**506899**	N	
2.0 i	169/.033/.034/.333/.334	E	2034	266.960,266.980	M	Y		04/08 ▸	6402000301	**506899**	N	
2.0 i	169/.033/.034/.333/.334	E	2034	266.960,266.980	A	Y		04/08 ▸	6402000301	**506899**	N	
2.0 CDi 16V	169/.006/.007/.008/.306 .307	D	1991	640.940,640.941,640.942	M	Y		04/08 ▸	6402000301	**506899**	N	
2.0 CDi,2.0 CDi 16V	169/.006/.007/.008/.306 .307	D	1991	640.940,640.941,640.942	A	Y		04/08 ▸	6402000301	**506899**	N	

B Class (2005>2008)

B150 i	245.231	E	1498	266.920	M	Y		05/05 ▸ 03/08	6402000301	**506899**	N	
B150 i	245.231	E	1498	266.920	A	Y		05/05 ▸ 03/08	6402000301	**506899**	N	
B170 i	245.232	E	1699	266.940	M	Y		05/05 ▸ 03/08	6402000301	**506899**	N	
B170 i	245.232	E	1699	266.940	A	Y		05/05 ▸ 03/08	6402000301	**506899**	N	
B200 i	245/.233/.234	E	2034	266.960,266.980	M	Y		05/05 ▸ 03/08	6402000301	**506899**	N	
B200 i	245/.233/.234	E	2034	266.960,266.980	A	Y		05/05 ▸ 03/08	6402000301	**506899**	N	
B180 CDi,B200 CDi	245/.207/.208	D	1991	640.940,640.941	M	Y		05/05 ▸ 03/08	6402000301	**506899**	N	
B180 CDi,B200 CDi	245/.207/.208	D	1991	640.940,640.941	A	Y		05/05 ▸ 03/08	6402000301	**506899**	N	

B Class (2008>)

2.0 i	245	F	2034	266.NGT	M	Y		04/08 ▸	6402000301	**506899**	N	
2.0 i	245	F	2034	266.NGT	A	Y		04/08 ▸	6402000301	**506899**	N	
1.5 i	245.231	E	1498	266.920	M	Y		04/08 ▸	6402000301	**506899**	N	
1.5 i	245.231	E	1498	266.920	A	Y		04/08 ▸	6402000301	**506899**	N	
1.7 i	245.232	E	1699	266.940	M	Y		04/08 ▸	6402000301	**506899**	N	
1.7 i	245.232	E	1699	266.940	A	Y		04/08 ▸	6402000301	**506899**	N	
2.0 i	245/.233/.234	E	2034	266.960,266.980	M	Y		04/08 ▸	6402000301	**506899**	N	
2.0 i	245/.233/.234	E	2034	266.960,266.980	A	Y		04/08 ▸	6402000301	**506899**	N	
2.0 CDi 16V	245/.207/.208	D	1991	640.940,640.941	M	Y		04/08 ▸	6402000301	**506899**	N	
2.0 CDI 16V	245/.207/.208	D	1991	640.940,640.941	A	Y		04/08 ▸	6402000301	**506899**	N	

C Class (202) (93>2001)

1.8 i	202/.018/.078	E	1799	111.921, 111.920	M	Y		03/93 ▸	1112000401	**506306**	N	
1.8 i	202/.018/.078	E	1799	111.921, 111.920	A	Y		03/93 ▸	1112000401	**506306**	N	
2.0 i	202/.020/.080	E	1998	111.945, 111.941	M	Y		01/94 ▸	1112000401	**506306**	N	
2.0 i	202/.020/.080	E	1998	111.941, 111.945	A	Y		01/94 ▸	1112000401	**506306**	N	
2.0 i	202.025	E	1998	111.944	A	Y		01/94 ▸	1112002301	**506660**	N	
2.2 i	202.022	E	2199	111.961	M	Y		03/93 ▸	1112000401	**506306**	N	
2.2 i	202.022	E	2199	111.961	A	Y		03/93 ▸	1112000401	**506306**	N	
2.3 i	202/.023/.083	E	2295	111.974	M	Y		08/95 ▸	1112000401	**506306**	N	
2.3 i	202.024	E	2295	111.975	M	Y		09/95 ▸	1112002301	**506660**	N	
2.3 i	202/.023/.083	E	2295	111.974	A	Y		08/95 ▸	1112000401	**506306**	N	
2.3 i	202.024	E	2295	111.975	A	Y		09/95 ▸	1112002301	**506660**	N	
2.0 D	202.120	D	1997	601.913	M	Y		03/93 ▸	6012001120	**506307**	N	
2.0 D	202.120	D	1997	601.913	A	Y		03/93 ▸	6012001120	**506307**	N	
2.0 D	202/.122/.180	D	1998	604.915	M	Y		03/93 ▸	6012001120	**506307**	N	
2.0 D	202/.122/.180	D	1998	604.915	A	Y		03/93 ▸	6012001120	**506307**	N	
2.2 D	202/.121/.182	D	2155	604.910	M	Y		08/93 ▸	6012001120	**506307**	N	
2.2 D	202/.121/.182	D	2155	604.910	A	Y		08/93 ▸	6012001120	**506307**	N	
2.5 D	202.125	D	2497	605.910	M	Y		05/93 ▸	6022000520	**506060**	N	
2.5 D	202.125	D	2497	605.910	A	Y		05/93 ▸	6022000520	**506060**	N	

C Class (203) (2000>2003)

2.0 i	203/.045/.245/.745	E	1998	111.955	M	Y		04/00 ▸ 12/03	1112004201	**506882**	N	
2.0 i	203/.045/.245/.745	E	1998	111.955	A	Y		04/00 ▸ 12/03	1112004201	**506882**	N	
2.3 i	203.747	E	2295	111.981	M	Y		09/00 ▸ 12/03	1112004201	**506882**	N	
2.3 i	203.747	E	2295	111.981	A	Y		09/00 ▸ 12/03	1112004201	**506882**	N	
2.6 i V6 18V	203/.061/.261	E	2597	112.912	M	Y		04/00 ▸ 12/03	1122001501	**506832**	SS	
2.6 i V6 18V	203/.061/.261	E	2597	112.912	M	y		04/00 ▸ 12/03	1122001401	**506787**	N	
2.6 i V6 18V	203/.061/.081/.261/.281	E	2597	112.912, 112.916	A	Y		04/00 ▸ 12/03	1122001501	**506832**	SS	
2.6 i V6 18V	203/.061/.081/.261/.281	E	2597	112.912, 112.916	A	y		04/00 ▸ 12/03	1122001401	**506787**	N	
3.2 i V6 18V	203.764	E	3199	112.946	M	y		09/02 ▸ 12/03	1122001401	**506787**	N	
3.2 i V6 18V	203.764	E	3199	112.946	M	Y		09/02 ▸ 12/03	1122001501	**506832**	SS	

• **New** Nouveau **Nuevo** Novo **Nuovo** Nieuw **Neu** Yeni Новый Nou

MERCEDES (.../...)

C Class (203) (2000>2003) (.../...)

3.2 i V6 18V	203/.064/.084/.264/.284 .764	E	3199	112.953, 112.946	A	y		04/00 ▸ 12/03	1122001401	**506787**	N	
3.2 i V6 18V	203/.064/.084/.264/.284 .764	E	3199	112.946, 112.953	A	Y		04/00 ▸ 12/03	1122001501	**506832**	SS	
2.1 CDI	203/.004/.006/.204/.206 .706	D	2148	611.962	M	Y		04/00 ▸ 12/03	6112001201	**506676**	SS	
2.1 CDI 16V	203/.007/.207/.208	D	2148	646.963, 646.962	M	Y		02/01 ▸ 12/03	6462000301	**506831**	SS	
2.1 CDI	203/.004/.006/.204/.206 .706	D	2148	611.962	A	Y		04/00 ▸ 12/03	6112001201	**506676**	SS	
2.1 CDI 16V	203/.007/.207/.208	D	2148	646.962, 646.963	A	Y		02/01 ▸ 12/03	6462000301	**506831**	SS	
2.7 CDI	203/.016/.216	D	2685	612.962	M	Y		08/00 ▸ 12/03	6112001201	**506676**	SS	
2.7 CDI	203/.016/.216	D	2685	612.962	A	Y		08/00 ▸ 12/03	6112001201	**506676**	SS	

C Class (203) (2004>2008)

C230 i	203/.052/.252/.752	E	2496	272.920	M	Y	CH: 6	01/04 ▸ 02/08	2722000901	▲**506964**	vvv	
C230 i	203/.052/.252/.752	E	2496	272.920	A	Y	CH: 6	01/04 ▸ 02/08	2722000901	▲**506964**	vvv	
C230 i	203/.052/.252/.752	E	2496	272.920	M	Y		01/04 ▸ 02/08	2722000401	●**526005**	V	
C230 i	203/.052/.252/.752	E	2496	272.920	A	Y		01/04 ▸ 02/08	2722000401	●**526005**	V	
C280 i	203.054	E	2996	272.940	M	Y	CH: 6	07/05 ▸ 12/06	2722000901	▲**506964**	vvv	
C280 i	203/.054/.092/.254/.292	E	2996	272.940	A	Y	CH: 6	06/05 ▸ 08/07	2722000901	▲**506964**	vvv	
C280 i	203.054	E	2996	272.940	M	Y		07/05 ▸ 12/06	2722000401	●**526005**	V	
C280 i	203/.054/.092/.254/.292	E	2996	272.940	A	Y		06/05 ▸ 08/07	2722000401	●**526005**	V	
C350 i	203/.056/.256	E	3498	272.960	M	Y	CH: 6	07/05 ▸ 08/07	2722000901	▲**506964**	vvv	
C350 i	203/.056/.256/.756	E	3498	272.960	A	Y	CH: 6	01/05 ▸ 02/08	2722000901	▲**506964**	vvv	
C350 i	203/.056/.256	E	3498	272.960	M	Y		07/05 ▸ 08/07	2722000401	●**526005**	V	
C350 i	203/.056/.256/.756	E	3498	272.960	A	Y		01/05 ▸ 02/08	2722000401	●**526005**	V	
CLK 350 i	209/.356/.456	E	3498	272.960	M	Y		01/05 ▸ 03/05	2722000401	●**526005**	V	
CLK 350 i	209/.356/.456	E	3498	272.960	A	Y		01/05 ▸ 03/05	2722000401	●**526005**	V	
C270CDI CDI	203/.016/.216	D	2685	612.962	M	Y		01/04 ▸ 02/08	6112001201	**506676**	SS	
C270CDI CDI	203/.016/.216	D	2685	612.962	A	Y		01/04 ▸ 02/08	6112001201	**506676**	SS	

C Class (203) Facelift

C320CDI CDI	203/.020/.220	D	2987	642.910	M	Y	CH: 8	07/05 ▸ 08/07	6422001001	▲**506987**	vvv	
C320CDI CDI	203/.020/.220	D	2987	642.910	A	Y	CH: 8	07/05 ▸ 08/07	6422001001	▲**506987**	vvv	

C Class (204) (2007>)

1.6 BE 16V,1.6 i 16V	204/.044/.045/.245	E	1597	271.910	M	Y		04/08 ▸	2712000201	**506865**	N	
1.6 BE 16V,1.6 i 16V	204/.044/.045	E	1597	271.910	A	Y		04/08 ▸	2712000201	**506865**	N	
1.8 i 16V	204/.041/.046/.241/.246	E	1796	271.950,271.952	M	Y		01/07 ▸	2712000201	**506865**	N	
1.8 i 16V	204/.041/.046/.241/.246	E	1796	271.950,271.952	A	Y		01/07 ▸	2712000201	**506865**	N	
2.5 i V6 24V	204/.052/.085/.252	E	2496	272.911,272.921,272.922	M	Y	CH: 6	01/07 ▸ 02/11	2722000901	▲**506964**	vvv	
2.5 i V6 24V	204/.052/.085/.252	E	2496	272.911,272.921	A	Y	CH: 6	01/07 ▸ 02/11	2722000901	▲**506964**	vvv	
3.0 i V6 24V	204/.054/.254	E	2996	272.947	M	Y	CH: 6	01/07 ▸ 02/11	2722000901	▲**506964**	vvv	
3.0 i V6 24V	204/.054/.081/.254	E	2996	272.947,272.948	A	Y	CH: 6	01/07 ▸ 02/11	2722000901	▲**506964**	vvv	
3.5 i V6 24V	204/.056/.087/.256	E	3498	272.961,272.971	A	Y	CH: 6	01/07 ▸ 02/11	2722000901	▲**506964**	vvv	
2.15 CDI 16V	204/.007/.008/.207/.208	D	2148	646.811	M	Y		01/07 ▸	6462000301	**506831**	SS	
2.15 CDI 16V	204/.007/.008/.207/.208	D	2148	646.811	A	Y		01/07 ▸	6462000301	**506831**	SS	
3.0 CDI V6 24V	204/.022/.222	D	2987	642.960	M	Y	CH: 8	05/07 ▸ 02/11	6422001001	▲**506987**	vvv	
3.0 CDI V6 24V	204/.022/.222	D	2987	642.960	M	Y	CH: 7	05/07 ▸ 02/11	6422000701	▲**506980**	vvv	
3.0 CDI V6 24V	204/.022/.089/.222/.289	D	2987	642.960,642.961	A	Y	CH: 7	05/07 ▸ 02/11	6422000701	▲**506980**	vvv	
3.0 CDI V6 24V	204/.022/.089/.222/.289	D	2987	642.960,642.961	A	Y	CH: 8	05/07 ▸ 02/11	6422001001	▲**506987**	vvv	

CLK (208) (97>2003)

CLK200K i	208/.345/.445	E	1998	111.944	M	Y		06/97 ▸ 01/03	1112002301	**506660**	N	
CLK200K i	208/.344/.444	E	1998	111.956	A	Y		06/99 ▸ 06/00	1112004201	**506882**	N	
CLK230K i	208/.347/.447	E	2295	111.975	M	Y		06/97 ▸ 01/03	1112002301	**506660**	N	
CLK230K i	208/.348/.448	E	2295	111.982	A	Y		04/00 ▸ 01/03	1112004201	**506882**	N	
CLK320 i	208/.365/.465	E	3199	112.940	A	y		06/97 ▸ 01/03	1122001401	**506787**	N	
CLK430 i	208.370	E	4266	113.943	A	y		06/98 ▸ 02/02	1122001401	**506787**	N	
CLK430 i	208.470	E	4266	113.943	A	Y		06/99 ▸ 01/03	1112002301	**506660**	N	
CLK55 i	208.374	E	5439	113.984	A	y		06/99 ▸ 02/02	1122001401	**506787**	N	

CLK (209) (2002>2009)

CLK 240 i	209/.361/.461	E	2597	112.912	M	y		03/02 ▸ 05/05	1122001401	**506787**	N	

• **New** Nouveau **Nuevo** Novo **Nuovo** Nieuw **Neu** Yeni Новый Nou

Valeo

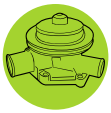

			cc									

MERCEDES (.../...)

CLK (209) (2002>2009) (.../...)

CLK 240 i	209/.361/.461	E	2597	112.912	M	Y		03/02 ▸ 05/05	1122001501	**506832**	SS	
CLK 240 i	209/.361/.461	E	2597	112.912	A	y		03/02 ▸ 05/05	1122001401	**506787**	N	
CLK 240 i	209/.361/.461	E	2597	112.912	A	Y		03/02 ▸ 05/05	1122001501	**506832**	SS	
CLK 280 i	209/.354/.454	E	2996	272.940	M	Y	CH: 6	03/05 ▸ 06/09	2722000901	**▲506964**	vvv	
CLK 280 i	209/.354/.454	E	2996	272.940	A	Y	CH: 6	03/05 ▸ 06/09	2722000901	**▲506964**	vvv	
CLK 280 i	209/.354/.454	E	2996	272.940	M	Y		01/05 ▸ 03/05	2722000401	**●526005**	V	
CLK 280 i	209/.354/.454	E	2996	272.940	A	Y		01/05 ▸ 03/05	2722000401	**●526005**	V	
CLK 320 i	209/.365/.465	E	3199	112.955	A	y		03/02 ▸ 05/05	1122001401	**506787**	N	
CLK 320 i	209/.365/.465	E	3199	112.955	A	Y		03/02 ▸ 05/05	1122001501	**506832**	SS	
CLK 350 i	209/.356/.456	E	3498	272.960	M	Y	CH: 6	03/05 ▸ 06/09	2722000901	**▲506964**	vvv	
CLK 350 i	209/.356/.456	E	3498	272.960	A	Y	CH: 6	03/05 ▸ 06/09	2722000901	**▲506964**	vvv	
CLK 500 i	209/.375/.475	E	4966	113.968	A	y		03/02 ▸	1122001401	**506787**	N	
CLK 500 i	209/.375/.475	E	4966	113.968	A	Y		03/02 ▸	1122001501	**506832**	SS	
CLK 55 AMG i	209/.376/.476	E	5439	113.987	A	y		03/02 ▸	1122001401	**506787**	N	
CLK 220 CDI	209.308	D	2148	646.966	M	Y		06/05 ▸	6462000301	**506831**	SS	
CLK 220 CDI	209.308	D	2148	646.966	A	Y		06/05 ▸	6462000301	**506831**	SS	
CLK 270 CDI	209.316	D	2685	612.967	M	Y		03/02 ▸ 05/05	6112001201	**506676**	SS	
CLK 270 CDI	209.316	D	2685	612.967	A	Y		03/02 ▸ 05/05	6112001201	**506676**	SS	
CLK 320 CDI	209/.320/.420	D	2987	642.910	M	Y	CH: 7	06/05 ▸ 06/09	6422000701	**▲506980**	vvv	
CLK 320 CDI	209/.320/.420	D	2987	642.910	M	Y	CH: 8	06/05 ▸ 11/07	6422001001	**▲506987**	vvv	
CLK 320 CDI	209/.320/.420	D	2987	642.910	A	Y	CH: 8	06/05 ▸ 11/07	6422001001	**▲506987**	vvv	
CLK 320 CDI	209/.320/.420	D	2987	642.910	A	Y	CH: 7	06/05 ▸ 06/09	6422000701	**▲506980**	vvv	

CLC (203)

1.8 i 16V	203/.741/.746	E	1796	271.946,271.957	M	Y		03/08 ▸	2712000201	**506865**	N	
1.8 i 16V	203/.741/.746	E	1796	271.946,271.957	A	Y		03/08 ▸	2712000201	**506865**	N	
2.5 i V6 24V	203.752	E	2496	272.920	M	Y	CH: 6	03/08 ▸	2722000901	**▲506964**	vvv	
2.5 i V6 24V	203.752	E	2496	272.920	A	Y	CH: 6	03/08 ▸	2722000901	**▲506964**	vvv	
3.2 i V6 24V	203.756	E	3498	272.960	M	Y	CH: 6	03/08 ▸	2722000901	**▲506964**	vvv	
3.2 i V6 24V	203.756	E	3498	272.960	A	Y	CH: 6	03/08 ▸	2722000901	**▲506964**	vvv	
2.1 CDI 16V	203/.707/.708	D	2148	646.962,646.963	M	Y		03/08 ▸	6462000301	**506831**	SS	
2.1 CDI 16V	203/.707/.708	D	2148	646.962,646.963	A	Y		03/08 ▸	6462000301	**506831**	SS	

CLS (2004>2008)

CLS350 i	219/.356/.372	E	3498	272.964	A	Y		07/04 ▸ 01/08	2722000401	**●526005**	V	
CLS350 i	219.372	E	3498	272.964	A	Y	CH: 6	07/05 ▸ 01/08	2722000901	**▲506964**	vvv	
CLS500 i	219.375	E	4966	113.967	A	y		07/04 ▸ 01/08	1122001401	**506787**	N	
CLS320CDI CDI	219.322	D	2987	642.920	A	Y	CH: 8	06/05 ▸ 11/07	6422001001	**▲506987**	vvv	
CLS320CDI CDI	219.322	D	2987	642.920	A	Y	CH: 7	06/05 ▸ 01/08	6422000701	**▲506980**	vvv	

CLS (2008>20011)

3.0 i V6 24V	211/.054/.254	E	2996	272.943	M	Y	CH: 6	04/06 ▸ 11/09	2722000901	**▲506964**	vvv	
3.0 i V6 24V	219.354	E	2996	272.943	A	Y	CH: 6	02/08 ▸ 01/11	2722000901	**▲506964**	vvv	
3.0 CDI V6 24V	219.322	D	2987	642.920	A	Y	CH: 7	02/08 ▸ 06/09	6422000701	**▲506980**	vvv	

E Class (124)

E200 i,E200T i	124/.019/.040/.060/.079	E	1998	111.940	M	Y		07/93 ▸	1112000401	**506306**	N	
E200 i,E200T i	124/.019/.040/.060/.079	E	1998	111.940	A	Y		07/93 ▸	1112000401	**506306**	N	
E220 i	124/.042/.062	E	2199	111.960	M	Y		07/93 ▸	1112000401	**506306**	N	
E220 i	124/.042/.062	E	2199	111.960	A	Y		07/93 ▸	1112000401	**506306**	N	
E280L i	124.029	E	2799	104.942	M	Y			1042004701	**506305**	N	
E280L i	124.029	E	2799	104.942	A	Y			1042004701	**506305**	N	
E300 i,E300T i	124/.230/.290	E	2962	103.985	M	Y		07/93 ▸ 02/96	1032003701	**506061**	N	
E300 i,E300T i	124/.230/.290	E	2962	103.985	A	Y		07/93 ▸ 02/96	1032003701	**506061**	N	
E320 i	124/.052/.066	E	3199	104.992	M	Y		07/93 ▸	1042004501	**506535**	N	
E320 i	124/.052/.066	E	3199	104.992	M	Y		07/93 ▸	1042004701	**506305**	N	
E320 i	124/.052/.066	E	3199	104.992	A	Y		07/93 ▸	1042004701	**506305**	N	
E320 i	124/.052/.066	E	3199	104.992	A	Y		07/93 ▸	1042004501	**506535**	N	
E36 AMG i,E36 i	124/.052/.066	E	3606	C36AMG	M	Y		05/94 ▸	1042004501	**506535**	N	
E36 AMG i,E36 i	124/.052/.066	E	3606	C36AMG	M	Y		05/94 ▸	1042004701	**506305**	N	
E420 i	124.034	E	4196	119.975	A	Y			1192002101	**506632**	N	
E420 i	124.034	E	4196	119.975	A	Y		07/93 ▸	1192001501	**506444**	N	
E500 i	124.036	E	4973	119.974	A	Y			1192002101	**506632**	N	

• **New** Nouveau **Nuevo** Novo **Nuovo** Nieuw **Neu** Yeni Новый Nou

MERCEDES (.../...)

E Class (124) (.../...)

E500 i	124.036	E	4973	119.974	A	Y		07/93 ▸	1192001501	**506444**	N	
E200D D	124.120	D	1997	601.912	M	Y		07/93 ▸ 09/95	6022000520	**506060**	N	
E200D D	124.120	D	1997	601.912	A	Y		07/93 ▸ 09/95	6022000520	**506060**	N	
E250D D,E250DL D,E250TD D E250TD TD	124/.126/.128/.129/.186 .188	D	2497	605.911, 602.962	M	Y			6022000520	**506060**	N	
E250D D,E250DL D,E250TD D E250TD TD	124/.126/.128/.129/.186 .188	D	2497	602.962, 605.911	A	Y			6022000520	**506060**	N	
E300TD D	124.191	D	2996	606.910	M	Y		07/93 ▸ 02/96	6022000520	**506060**	N	
E300TD D,E300TD TD	124/.133/.191/.193/.333 .393	D	2996	603.963, 603.960, 606.910	A	Y			6022000520	**506060**	N	

E Class (210)

E200 i	210/.035/.235	E	1998	111.942	M	Y		04/95 ▸ 06/99	1112000401	**506306**	N	
E200 i	210/.035/.235	E	1998	111.942	A	Y		04/95 ▸ 06/99	1112000401	**506306**	N	
E230 i	210/.037/.237	E	2295	111.970	M	Y		04/95 ▸ 06/99	1112000401	**506306**	N	
E230 i	210/.037/.237	E	2295	111.970	A	Y		04/95 ▸ 06/99	1112000401	**506306**	N	
E280 i	210.063	E	2799	112.921	M	y		04/95 ▸	1122001401	**506787**	N	
E280 i	210.053	E	2799	104.945	M	Y		04/95 ▸ 06/99	1042004401	**506305**	N	
E280 i	210.053	E	2799	104.945	A	Y		04/95 ▸ 06/99	1042004401	**506305**	N	
E280 i	210/.063/.081	E	2799	112.921	A	y		04/95 ▸	1122001401	**506787**	N	
E320 i	210.065	E	3199	112.941	A	y		04/95 ▸	1122001401	**506787**	N	
E320 i	210.055	E	3199	104.995	A	Y		04/95 ▸ 06/99	1042004401	**506305**	N	
E420 i	210/.072/.272	E	4196	119.985	A	Y		04/95 ▸ 06/99	1192002101	**506632**	N	
E50 i	210.072	E	4973	119.AMG	A	Y		03/96 ▸ 06/99	1192001501	**506444**	N	
E50 i	210.072	E	4973	119.AMG	A	Y		03/96 ▸ 06/99	1192002101	**506632**	N	
E200D D	210.003	D	1998	604.917	M	Y		04/95 ▸ 06/99	6012001120	**506307**	N	
E200D D	210.003	D	1998	604.917	A	Y		04/95 ▸ 06/99	6012001120	**506307**	N	
E220D D	210.004	D	2155	604.912	M	Y		04/95 ▸ 06/99	6012001120	**506307**	N	
E220D D	210.004	D	2155	604.912	A	Y		04/95 ▸ 06/99	6012001120	**506307**	N	
E250D D,E250DL D	210/.010/.210/.610	D	2497	605.912	M	Y		04/95 ▸ 06/99	6022000520	**506060**	N	
E250D D,E250DL D	210/.010/.210/.610	D	2497	605.912	A	Y		04/95 ▸ 06/99	6022000520	**506060**	N	
E290TD TD,E290TDL TD	210/.017/.217/.617	D	2874	602.982	M	Y		04/95 ▸ 06/99	6022000520	**506060**	N	
E290TD TD,E290TDL TD	210/.017/.217/.617	D	2874	602.982	A	Y		04/95 ▸ 06/99	6022000520	**506060**	N	
E300D D	210.020	D	2996	606.912	M	Y		04/95 ▸ 06/99	6022000520	**506060**	N	
E300D D	210.020	D	2996	606.912	A	Y		04/95 ▸ 06/99	6022000520	**506060**	N	
E320 CDI	210/.026/.226	D	3224	613.961	A	Y		06/99 ▸ 03/03	6132000701	**506675**	SS	

E Class (211) (2002>2006)

E 280 i	211/.054/.254	E	2996	272.943	M	Y	CH: 6	06/05 ▸ 03/06	2722000901	▲**506964**	vvv	
E 280 i	211/.054/.092/.254/.292	E	2996	272.943,272.944	A	Y	CH: 6	06/05 ▸ 03/06	2722000901	▲**506964**	vvv	
E 350 i	211.056	E	3498	272.964	M	Y	CH: 6	03/05 ▸ 03/06	2722000901	▲**506964**	vvv	
E 350 i	211/.056/.087/.256/.287	E	3498	272.964,272.972	A	Y	CH: 6	07/04 ▸ 03/06	2722000901	▲**506964**	vvv	
E 350 i	211.056	E	3498	272.964	M	Y		07/04 ▸ 03/05	2722000401	●**526005**	V	
E 350 i	211/.056/.087/.256/.287	E	3498	272.964,272.972	A	Y		07/04 ▸ 03/05	2722000401	●**526005**	V	
E 200 CDI,E 220 CDI	211/.004/.006/.206	D	2148	646.951, 646.961	M	Y		03/02 ▸	6462000301	**506831**	SS	
E 200 CDI,E 220 CDI	211/.004/.006/.206	D	2148	646.951, 646.961	A	Y		03/02 ▸	6462000301	**506831**	SS	
E 270 CDI	211/.016/.216	D	2685	647.961	M	Y		03/02 ▸ 05/05	6462000301	**506831**	SS	
E 270 CDI	211/.016/.216	D	2685	647.961	A	Y		03/02 ▸ 05/05	6462000301	**506831**	SS	
E 280 CDI	211/.020/.220	D	2987	642.920	M	Y	CH: 8	06/05 ▸ 03/06	6422001001	▲**506987**	vvv	
E 280 CDI	211/.020/.220	D	2987	642.920	M	Y	CH: 7	06/05 ▸ 03/06	6422000701	▲**506980**	vvv	
E 280 CDI,E 320 CDI	211/.020/.022/.084/.089 .220/.222/.284/.289/.620	D	2987	642.920,642.921	A	Y	CH: 7	06/05 ▸ 03/06	6422000701	▲**506980**	vvv	
E 280 CDI,E 320 CDI	211/.020/.022/.084/.089 .220/.222/.284/.289/.620	D	2987	642.920,642.921	A	Y	CH: 8	06/05 ▸ 03/06	6422001001	▲**506987**	vvv	
E 280 CDI,E 320 CDI	211/.023/.026/.223/.226	D	3222	648.961	A	Y		03/02 ▸ 05/05	6132000901	**506930**	SS	

E Class (211) (2006>2009)

3.0 i V6 24V	211/.054/.092/.254/.292	E	2996	272.943,272.944	A	Y	CH: 6	04/06 ▸ 11/09	2722000901	▲**506964**	vvv	
3.5 i V6 24V	211/.056/.256	E	3498	272.964	M	Y	CH: 6	04/06 ▸ 11/09	2722000901	▲**506964**	vvv	
3.5 i V6 24V	211/.087/.256/.287	E	3498	272.964,272.972	A	Y	CH: 6	04/06 ▸ 11/09	2722000901	▲**506964**	vvv	
2.1 CDI 16V	211/.007/.008/.208	D	2148	646.821, 646.820	M	Y		04/06 ▸	6462000301	**506831**	SS	
2.1 CDI 16V	211/.007/.008/.208/.608	D	2148	646.821, 646.820	A	Y		04/06 ▸	6462000301	**506831**	SS	

E Class FL (211) (2006>2009)

3.0 CDI V6 24V	211/.020/.220	D	2987	642.920	M	Y	CH: 8	04/06 ▸ 11/07	6422001001	▲**506987**	vvv	

• **New** Nouveau **Nuevo** Novo **Nuovo** Nieuw **Neu** Yeni Новый Nou

Valeo

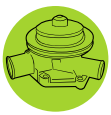

MERCEDES (.../...)

E Class FL (211) (2006>2009) (.../...)

3.0 CDI V6 24V	211/.020/.220	D	2987	642.920	M	Y	CH: 7	04/06 ▸ 11/09	6422000701	▲506980	vvv	
3.0 CDI V6 24V	211/.020/.022/.024/.084 .089/.220/.222/.284/.289	D	2987	642.920,642.921	A	Y	CH: 8	04/06 ▸ 11/07	6422001001	▲506987	vvv	
3.0 CDI V6 24V	211/.020/.022/.024/.084 .089/.220/.222/.284/.289	D	2987	642.920,642.921	A	Y	CH: 7	04/06 ▸ 11/09	6422000701	▲506980	vvv	

G Class (460)

2.3 i	460/.218/.228/.229/.238/.239/.249	E	2299	102.998	M	Y		06/82 ▸ 1989	1102001720	506100	N	
2.3 i	460.229	E	2299	102.998	A	Y		11/79 ▸ 1989	1102001720	506100	N	
2.3	460/.210/.220/.221/.230/.231/.241	E	2307	115.973	M	Y		03/79 ▸	1152001820	506100	N	
2.7 i	460/.212/.222/.223/.224/.232/.233 .243	E	2746	110.994	M	Y		11/79 ▸ 08/89	1102001720	506100	N	
2.7 i	460.222	E	2746	110.994	A	Y		08/84 ▸ 08/89	1102001720	506100	N	
2.4 D	460/.310/.320/.321/.330/.331/.337 .338/.341	D	2399	616.936	M	Y		11/79 ▸	1102001720	506100	N	
2.4 D	460/.310/.320/.321/.330/.331/.341	D	2399	616.936	A	Y		11/79 ▸ 1989	1102001720	506100	N	
2.5 D	460/.317/.328/.329/.337/.338	D	2497	602.930	M	Y		08/87 ▸ 1989	6022000520	506060	N	
2.5 D	460/.317/.328/.337/.338	D	2497	602.930	A	Y		08/87 ▸ 1989	6022000520	506060	N	
3.0 D	460/.312/.322/.323/.325/.332/.333 .343	D	2998	617.931	M	Y		▸ 1989	6162000420	506343	N	
3.0 D	460/.312/.322/.323/.325/.332/.333 .343	D	2998	617.931	M	Y		03/79 ▸	1152001520	506100	N	
3.0 D	460/.312/.322/.323/.332/.333/.343	D	2998	617.931	A	Y		▸ 1989	6162000420	506343	N	
3.0 D	460/.312/.322/.323/.332/.333/.343	D	2998	617.931	A	Y		03/79 ▸	1152001520	506100	N	

G Class (463)

3.0 i	463/.207/.227/.228	E	2962	103.987	M	Y		09/89 ▸	1032003701	506061	N	
3.0 i	463/.207/.227/.228	E	2962	103.987	A	Y		09/89 ▸	1032003701	506061	N	
3.2 i	463/.208/.230/.231	E	3199	104.996	A	Y		10/93 ▸	1042003201	506547	N	
3.2 i V6 18V	463/.232/.233/.244/.245 .250	E	3199	112.945	A	y		07/97 ▸	1122001401	506787	N	
3.2 i V6 18V	463/.232/.233/.244/.245 .250	E	3199	112.945	A	Y		07/97 ▸	1122001501	506832	SS	
5.0 i V8 24V	463/.206/.240/.241/.247 .248/.254	E	4966	113.962	A	y		04/98 ▸	1122001401	506787	N	
5.0 i V8 24V	463/.206/.240/.241/.247 .248/.254	E	4966	113.962	A	Y		04/98 ▸	1122001501	506832	SS	
5.0 i	463.228	E	4973	117.965	A	Y		01/92 ▸ 07/93	1162001701	506619	N	
5.4 i V8 24V	463.243	E	5439	113.982	A	y		04/99 ▸	1122001401	506787	N	
2.5 D	463/.304/.324/.325	D	2497	602.931	M	Y		09/89 ▸	6022000520	506060	N	
2.9 D	461/.323/.328/.329/.337/.338/.341 .367/.368	D	2874	602.942	M	Y		01/92 ▸	6022000520	506060	N	
2.9 D	461/.335/.336	D	2874	602.983	A	Y		07/97 ▸	6022000520	506060	N	
3.0 CDI V6 24V	463/.303/.340/.341	D	2987	642.970	A	Y	CH: 8	09/06 ▸ 11/07	6422001001	▲506987	vvv	
3.0 TD	463/.307/.327/.328	D	2996	603.931	M	Y		09/89 ▸	6022000520	506060	N	
3.0 TD	463/.307/.327/.328	D	2996	603.931	A	Y		09/89 ▸	6022000520	506060	N	
3.5 TD	463/.300/.320/.321	D	3449	603.972	M	Y		09/91 ▸ 09/97	6052000820	506671	N	

GL Class (164)

3.0 CDi V6 24V	164/.822/.824/.825	D	2987	642.820,642.940	A	Y	CH: 8	01/06 ▸	6422001001	▲506987	vvv	

GLK

3.0 i V6 24V	204.981	E	2996	272.948	A	Y	CH: 6	07/08 ▸ 06/09	2722000901	▲506964	vvv	
3.5 i V6 24V	204/.956/.987	E	3498	272.971,272.991	A	Y	CH: 6	07/08 ▸ 06/11	2722000901	▲506964	vvv	
3.0 CDI V6 24V	204.983	D	2987	642.961	A	Y	CH: 7	07/08 ▸	6422000701	▲506980	vvv	

ML Class (163)

ML230 i	163.136	E	2295	111.977	M	y		10/97 ▸	1122001401	506787	N	
ML320 i	163.154	E	3199	112.942	A	y		05/97 ▸	1122001401	506787	N	
ML430 i	163.172	E	4266	113.942	A	y		03/98 ▸	1122001401	506787	N	
ML270CDi CDi	163.113	D	2668	612.963	M	Y		07/99 ▸	6112001201	506676	SS	
ML270CDi CDi	163.113	D	2668	612.963	A	Y		07/99 ▸	6112001201	506676	SS	

ML Class (164)

5.0 i V8 24V	164.175	E	4966	113.964	A	y		05/05 ▸ 04/08	1122001401	506787	N	

• **New** Nouveau **Nuevo** Novo **Nuovo** Nieuw **Neu** Yeni Новый Nou

MERCEDES (.../...)

ML Class (164) (.../...)

3.5 i V6 24V	164.186	E	3498	272.967	A	Y	CH: 6	05/05 ▸	2722000901	▲506964	vvv	
3.0 CDI V6 24V	164/.120/.121/.122/.124 .125	D	2987	642.820,642.940	A	Y	CH: 8	04/08 ▸	6422001001	▲506987	vvv	

R Class (W251)

3.0 i V6 24V	251/.054/.062/.154	E	2996	272.945	A	Y	CH: 6	04/08 ▸ 05/10	2722000901	▲506964	vvv	
3.5 i V6 24V	251/.056/.065/.156/.165	E	3498	272.967	A	Y	CH: 6	10/05 ▸	2722000901	▲506964	vvv	
3.5 i V6 24V	251/.065/.165	E	3498	272.967	A	Y		10/05 ▸	2722000401	●526005	V	
5.0 i V8 24V	251/.075/.175	E	4966	113.971	A	Y		10/05 ▸ 04/08	1122001501	506832	SS	
5.0 i V8 24V	251/.075/.175	E	4966	113.971	A	y		10/05 ▸ 04/08	1122001401	506787	N	
5.5 i V8 32V	251/.072/.172	E	5461	273.963	A	Y	CH: 6	04/08 ▸	2722000901	▲506964	vvv	
3.0 CDI V6 24V	251/.020/.022/.026/.122 .125/.126	D	2987	642.870,642.950	A	Y	CH: 7	10/05 ▸ 06/09	6422000701	▲506980	vvv	
3.0 CDI V6 24V	251/.020/.022/.122	D	2987	642.950	A	Y	CH: 8	10/05 ▸ 11/07	6422001001	▲506987	vvv	

S Class (126)

260 SE i	126.020	E	2599	103.941	M	Y		09/85 ▸ 06/91	1032001601	506061	N	
260 SE i	126.020	E	2599	103.941	A	Y		09/85 ▸ 06/91	1032001601	506061	N	
280 S,280 SE i,280 SEL i	126/.021/.022/.023	E	2746	110.924, 110.987	M	Y		09/79 ▸ 09/85	1102001920	506097	N	
280 SE i	126.022	E	2746	110.987	A	Y		09/79 ▸ 09/85	1102001920	506097	N	
300 SE i,300 SEL i	126/.024/.025	E	2962	103.981	M	Y		09/85 ▸ 07/91	1032001801	506057	N	
300 SE i,300 SEL i	126/.024/.025	E	2962	103.981	A	Y		09/85 ▸ 07/91	1032001801	506057	N	
380 SE i,380 SEC i 380 SEL i	126/.032/.033/.043	E	3818	116.961, 116.963	A	Y		01/80 ▸ 09/85	1172003301	506058	V	
420 SE i,420 SEC i 420 SEL i	126/.034/.035/.046	E	4196	116.965	A	Y		09/85 ▸ 12/91	1162001601	506619	N	
500 SE i,500 SEC i 500 SEL i	126/.036/.037/.044	E	4973	117.963, 117.961	A	Y		09/81 ▸ 06/91	1172003301	506058	V	
500 SEC i	126.044	E	4973	117.963, 117.965	A	Y		09/81 ▸ 06/91	1162001601	506619	N	
560 SE i,560 SEC i 560 SEL i	126/.038/.039/.045	E	5547	117.968	A	Y		09/85 ▸ 12/91	1162001601	506619	N	

S Class (140)

300	140.028	E	2799	104.944	M	Y		10/92 ▸ 06/93	1042004801	506547	N	
300	140.028	E	2799	104.944	A	Y		10/92 ▸ 06/93	1042004801	506547	N	
300	140/.032/.033	E	3199	104.990	M	Y		03/91 ▸ 06/93	1042003201	506547	N	
300	140/.032/.033	E	3199	104.990	A	Y		03/91 ▸ 06/93	1042003201	506547	N	
400	140/.042/.043	E	4196	119.971	A	Y		▸ 06/93	1192002101	506632	N	
400 ▸ 056885	140/.042/.043	E	4196	119.971	A	Y		03/91 ▸	1192001501	506444	N	
500 i	140/.050/.051/.070	E	4973	119.970	A	Y		▸ 06/93	1192002101	506632	N	
500 i	140/.050/.051/.070	E	4973	119.970	A	Y		03/91 ▸	1192001501	506444	N	
300 TD	140.134	D	3449	603.971	A	Y		▸ 06/93	6052000820	506671	N	
300 TD ▸ 018738	140.134	D	3449	603.971	A	Y		03/92 ▸	6022000520	506060	N	

S Class (220)

S280 i,S280L i	220/.063/.163	E	2799	112.922	A	Y		03/99 ▸	1122001401	506787	N	
S280 i,S280L i	220/.063/.163	E	2799	112.922	A	Y		03/99 ▸ 09/04	1122001501	506832	SS	
S320 i,S320L i	220/.065/.165	E	3199	112.944	A	Y		09/98 ▸ 09/04	1122001501	506832	SS	
S320 i,S320L i	220/.065/.165	E	3199	112.944	A	Y		09/98 ▸	1122001401	506787	N	
S350 i,S350L i	220/.067/.087/.167/.187	E	3724	112.972, 112.975	A	Y		09/02 ▸ 09/04	1122001401	506787	N	
S350 i,S350L i	220/.067/.087/.167/.187	E	3724	112.975, 112.972	A	Y		09/02 ▸ 09/04	1122001501	506832	SS	
S430 i,S430L i	220/.070/.083/.170/.183	E	4266	113.948, 113.941	A	Y		09/98 ▸	1122001401	506787	N	
S430 i,S430L i	220/.070/.083/.170/.183	E	4266	113.948, 113.941	A	Y		09/98 ▸ 09/04	1122001501	506832	SS	
S500 i,S500L i	220/.075/.084/.175/.184 .875	E	4966	113.960, 113.966	A	Y		09/98 ▸	1122001401	506787	N	
S500 i,S500L i	220/.075/.084/.175/.184 .875	E	4966	113.966, 113.960	A	Y		09/98 ▸ 09/04	1122001501	506832	SS	
S55 i	220/.073/.173	E	5439	113.986	A	Y		01/00 ▸ 09/04	1122001401	506787	N	
S55 i	220/.073/.173	E	5439	113.986	A	Y		01/00 ▸ 09/04	1122001501	506832	SS	
S320CDI CDI,S320CDIL CDI	220/.025/.125	D	3222	648.960	A	Y		09/02 ▸ 09/04	6132000901	506930	SS	

S Class (221)

3.5 i V6 24V	221/.056/.156	E	3498	272.965	A	Y	CH: 6	10/04 ▸ 06/09	2722000901	▲506964	vvv	

• **New** Nouveau **Nuevo** Novo **Nuovo** Nieuw **Neu** Yeni Новый Nou

Valeo

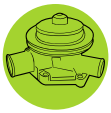

			Type Ctr.		cc						OE	Valeo		
MERCEDES (.../...)													
S Class (221) (.../...)													
3.0 CDI V6 24V	*221/.022/.080/.122/.180*	D		2987	642.930,642.932	A	Y	CH: 8	01/06 ▸ 06/09	6422001001	▲506987	vvv	
SL (R107 ROADSTER) (71>89)													
2.7	*107.042*	E		2746	110.982/986, 110.992	M	Y		07/74 ▸ 07/85	1102001720	506100	N	
3.0 i	*107.041*	E		2962	103.982	M	Y		09/85 ▸ 08/89	1032001801	506057	N	
3.0 i	*107.041*	E		2962	103.982	A	Y		09/85 ▸ 08/89	1032001801	506057	N	
4.2 i	*107.047*	E		4196	116.964	A	Y		09/85 ▸ 08/89	1162001601	506619	N	
5.0	*107.046*	E		4973	117.962	A	Y		09/81 ▸ 08/85	1172003301	506058	V	
5.0 i	*107.046*	E		4973	117.964	A	Y		09/85 ▸ 08/89	1162001601	506619	N	
SL (129)													
300 i	*129.060*	E		2962	103.984	M	Y		03/89 ▸ 07/93	1032003701	506061	N	
300 i	*129.060*	E		2962	103.984	A	Y		03/89 ▸ 07/93	1032003701	506061	N	
SL (230)													
3.0 i V6 24V	*230.454*	E		2996	272.949	A	Y	CH: 6	02/08 ▸	2722000901	▲506964	vvv	
SL350 i	*230/.456/.458*	E		3498	272.966,272.968	A	Y	CH: 6	11/05 ▸	2722000901	▲506964	vvv	
SLK (96>2003))													
SLK200 i	*170.435*	E		1998	111.946	M	Y		08/96 ▸ 12/03	1112000401	506306	N	
SLK200K i	*170.445*	E		1998	111.943	M	Y		08/96 ▸ 12/03	1112002301	506660	N	
SLK200 i	*170.435*	E		1998	111.946	A	Y		08/96 ▸ 12/03	1112000401	506306	N	
SLK230K i	*170.447*	E		2295	111.973	A	Y		08/96 ▸ 12/03	1112002301	506660	N	
SLK (2004>2007)													
SLK i	*171442*	E		1796	271.944	M	Y		03/04 ▸ 12/07	2712000201	506865	N	
SLK i	*171442*	E		1796	271.944	A	Y		01/04 ▸ 12/07	2712000201	506865	N	
SLK i	*171454*	E		2996	272.940	M	Y	CH: 6	01/05 ▸ 12/07	2722000901	▲506964	vvv	
SLK i	*171454*	E		2996	272.940	A	Y	CH: 6	01/05 ▸ 12/07	2722000901	▲506964	vvv	
SLK i	*171454*	E		2996	272.940	M	Y		01/05 ▸ 12/07	2722000401	●526005	V	
SLK i	*171454*	E		2996	272.940	A	Y		01/05 ▸ 12/07	2722000401	●526005	V	
SLK i	*171456*	E		3498	272.963	M	Y	CH: 6	01/04 ▸ 12/07	2722000901	▲506964	vvv	
SLK i	*171456*	E		3498	272.963	A	Y	CH: 6	01/04 ▸ 12/07	2722000901	▲506964	vvv	
SLK i	*171456*	E		3498	272.963	M	Y		01/04 ▸ 12/07	2722000401	●526005	V	
SLK i	*171456*	E		3498	272.963	A	Y		01/04 ▸ 12/07	2722000401	●526005	V	
SLK (2008>)													
3.0 i V6 24V	*171.454*	E		2996	272.942	M	Y	CH: 6	01/08 ▸	2722000901	▲506964	vvv	
3.0 i V6 24V	*171.454*	E		2996	272.942	A	Y	CH: 6	01/08 ▸	2722000901	▲506964	vvv	
3.5 i V6 24V	*171.458*	E		3498	272.969	M	Y	CH: 6	01/08 ▸	2722000901	▲506964	vvv	
3.5 i V6 24V	*171.458*	E		3498	272.969	A	Y	CH: 6	01/08 ▸	2722000901	▲506964	vvv	
V Class (638/2)													
V200	*638/.214/.294*	E		1998	111.948, 111.950	M	Y			1112003901	506651	N	
V200	*638.214*	E		1998	111.948	M	Y		10/96 ▸	1112003801	506650	N	
V200	*638/.214/.294*	E		1998	111.948, 111.950	A	Y		▸ 12/02	1112003901	506651	N	
V200	*638.214*	E		1998	111.948	A	Y		10/96 ▸	1112003801	506650	N	
V230	*638/.234/.294*	E		2295	111.980, 111.978	M	Y			1112003901	506651	N	
V230	*638.234*	E		2295	111.978	M	Y		10/96 ▸	1112003801	506650	N	
V230	*638/.234/.294*	E		2295	111.978, 111.980	A	Y		▸ 12/02	1112003901	506651	N	
V230	*638.234*	E		2295	111.978	A	Y		10/96 ▸	1112003801	506650	N	
V280	*638.294*	E		2799	104.900	M	Y		10/96 ▸ 12/02	0002000701	506484	N	
V280	*638/.244/.294*	E		2799	104.900	A	Y		10/96 ▸ 12/02	0002000701	506484	N	
V200 CDI,V220 CDI	*638.294*	D		2151	611.980	M	Y		01/99 ▸ 12/02	6112001001	506833	SS	
V200 CDI,V220 CDI	*638.294*	D		2151	611.980	A	Y		01/99 ▸ 12/02	6112001001	506833	SS	
V230TD TD	*638.274*	D		2299	601.970	M	Y		10/96 ▸ 12/02	6022000520	506060	N	
V230TD TD	*638.274*	D		2299	601.970	A	Y		10/96 ▸ 12/02	6022000520	506060	N	
Vaneo (414)													
1.6 i	*414.700*	E		1598	166.960, 166.961	M	Y		10/01 ▸	1662000720	506678	N	
1.6 i	*414.700*	E		1598	166.961	A	Y		10/01 ▸	1662000720	506678	N	
1.9 i	*414.700*	E		1898	166.991	M	Y		10/01 ▸	1662000720	506678	N	
1.9 i	*414.700*	E		1898	166.991	A	Y		10/01 ▸	1662000720	506678	N	

• **New** Nouveau **Nuevo** Novo **Nuovo** Nieuw **Neu** Yeni Новый Nou

		Type Ctr.		cc					OE	Valeo		
MERCEDES (.../...)												
Vaneo (414) (.../...)												
1.7 CDI	*414.700*	D	1689	668.914	M	Y		10/01 ▸	1662000720	**506678**	N	
1.7 CDI	*414.700*	D	1689	668.914	A	Y		10/01 ▸	1662000720	**506678**	N	
MERCEDES												
MB100												
2.4 D	*631333*	D	2399	616.963	M	Y		1989 ▸ 01/96	6022000520	**506060**	N	
Sprinter (95>2006)												
2.3 i	*901/.061/.062, 902/.011/.012/.061 .062/.071/.072, 903/.011/.012/.013 .022/.061/.062/.063/.071/.072/.073 904/.012/.013/.062/.063*	E	2295	111.979	M	Y		02/95 ▸ 02/06	1112004101	**506592**	N	
2.2 D	*901/.611/.612/.621/.661/.662, 902 .611/.612/.621/.622/.661/.662/.671 .672, 903/.611/.612/.613/.621/.622 .623/.661/.662/.663/.673, 904/.612 .613/.622/.623/.662/.663*	D	2151	611DE22LA	M	Y		11/99 ▸ 02/06	6112001101	**506875**	N	
2.3 D	*901/.311/.312/.321/.361/.362/.371 902/.311/.312/.321/.322/.361/.362 .371/.372, 903/.311/.312/.313/.321 .322/.323/.361/.362/.363/.371/.372 .373, 904/.312/.313/.322/.323/.362 .363*	D	2299	601.943	M	Y		02/95 ▸ 02/06	6022000520	**506060**	N	
2.9 D	*901/.421/.461/.462, 902/.411/.412 .421/.422/.461/.462/.471/.472, 903 .411/.412/.413/.421/.422/.423/.461 .462/.463/.471/.472/.473, 904/.412 .413/.422/.423/.462/.463*	D	2874	602.980	M	Y		02/95 ▸ 02/06	6022000520	**506060**	N	
Sprinter II (2006>)												
2.2 D	*906/.111/.113/.131/.133/.135/.153 .155/.211/.213/.231/.233/.235/.253 .255/.611/.613/.631/.633/.635/.637 .653/.655/.657/.711/.713/.731/.733 .735*	D	2148	646,646.984,646.DE22LA	M	Y		02/06 ▸	6462001001	**506926**	N	
2.2 D	*906/.111/.113/.131/.133/.135/.153 .155/.211/.213/.231/.233/.235/.253 .255/.611/.613/.631/.633/.635/.637 .653/.655/.657/.711/.713/.731/.733 .735*	D	2148	646,646.984,646.DE22LA	A	Y		02/06 ▸	6462001001	**506926**	N	
2.2 D	*906/.111/.113/.131/.133/.135/.153 .155/.211/.213/.231/.233/.235/.253 .255/.611/.613/.631/.633/.635/.637 .653/.655/.657/.711/.713/.731/.733 .735*	D	2148	646.984,646.985,646.986	M	Y	CH: 8	02/06 ▸	6422001001	▲**506987**	vvv	
2.2 D	*906/.111/.113/.131/.133/.135/.153 .155/.211/.213/.231/.233/.235/.253 .255/.611/.613/.631/.633/.635/.637 .653/.655/.657/.711/.713/.731/.733 .735*	D	2148	646.984,646.985,646.986	A	Y	CH: 8	02/06 ▸	6422001001	▲**506987**	vvv	
3.0 D V6 24V	*906/.111/.113/.131/.133 .135/.153/.155/.211/.213 .231/.233/.235/.253/.255 .611/.613/.631/.633/.635 .637/.653/.655/.657/.711 .713*	D	2987	642.992	M	Y	CH: 7	02/06 ▸	6422000701	▲**506980**	vvv	

• **New** Nouveau **Nuevo** Novo **Nuovo** Nieuw **Neu** Yeni Новый Nou

Valeo

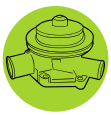

MERCEDES (.../...)

Sprinter II (2006>) (.../...)

3.0 D 24V,3.0 D V6 24V	*906/.111/.113/.131/.133 .135/.153/.155/.211/.213 .231/.233/.235/.253/.255 .611/.613/.631/.633/.635 .637/.653/.655/.657/.711 .713*	D	2987	642.992	A	Y	CH: 7	02/06 ▸	6422000701	**▲506980**	vvv	
3.0 D V6 24V	*906/.111/.113/.131/.133 .135/.153/.155/.211/.213 .231/.233/.235/.253/.255 .611/.613/.631/.633/.635 .637/.653/.655/.657/.711 .713*	D	2987	642.992	M	Y	CH: 8	02/06 ▸ 11/07	6422001001	**▲506987**	vvv	
3.0 D 24V,3.0 D V6 24V	*906/.111/.113/.131/.133 .135/.153/.155/.211/.213 .231/.233/.235/.253/.255 .611/.613/.631/.633/.635 .637/.653/.655/.657/.711 .713*	D	2987	642.992	A	Y	CH: 8	02/06 ▸ 11/07	6422001001	**▲506987**	vvv	

Transporter 207-410

2.3 D	*601/.311/.312/.316/.318/.321/.322 .326/.328/.361/.362/.368/.371/.376 .377, 602/.311/.313/.316/.318/.321 .323/.326/.328/.361/.362/.366/.367 .371/.372/.376/.377, 611/.317/.318 .367/.368*	D	2299	601.940	M	Y		09/88 ▸	6022000520	**506060**	N	
2.3 D,2.4 D	*601/.311/.312/.316/.318 .321/.322/.326/.328/.361 .362/.366/.367/.371/.372 .376/.377, 602/.311/.313 .316/.318/.321/.323/.326 .328/.361/.362/.366/.367 .371/.372/.376/.377/.382 611/.317/.318/.367/.368*	D	2404	616.917, 616.934, 616.913	M	Y		04/77 ▸	1102001720	**506100**	N	
2.4 D	*601/.311/.312/.316/.318/.321/.322 .326/.328/.361/.362/.366/.367/.371 .376/.377, 602/.311/.313/.316/.318 .321/.323/.326/.328/.361/.362/.366 .367/.371/.372/.376/.377/.382*	D	2404	616.939, 616.937	M	Y		04/77 ▸	6162000720	**506343**	N	
2.9 D	*601/.411/.412/.416/.418/.421/.422 .426/.428/.461/.462/.466/.467/.476 .477, 602/.411/.412/.416/.418/.421 .422/.426/.428/.461/.462/.466/.467 .471/.472/.476/.477/.478/.487, 611 .417/.418/.467/.468*	D	2874	602.940	M	Y		09/88 ▸	6022000520	**506060**	N	

Viano

3.0 i,3.2 i	*639/7111/7131/8111/8131 8151*	E	3199	112.951	A	y		01/03 ▸	1122001401	**506787**	N	
3.0 i,3.2 i	*639/7111/7131/8111/8131 8151*	E	3199	112.951	A	Y		01/03 ▸	1122001501	**506832**	SS	
3.7 i	*639.811*	E	3724	112.976	A	Y		06/04 ▸	1122001501	**506832**	SS	
3.7 i	*639.811*	E	3724	112.976	A	Y		06/04 ▸	1122001401	**506787**	N	
2.0 Cdi,2.2 Cdi	*639/7111/7131/8111/8131 8151*	D	2148	646.982	M	Y		01/03 ▸	6462001001	**506926**	N	
2.0 Cdi,2.2 Cdi	*639/7111/7131/8111/8131 8151*	D	2148	646.982	A	Y		01/03 ▸	6462001001	**506926**	N	

Vito (96>2003)

2.0 i	*638/.014/.094/.194*	E	1998	111.948, 111.950	M	Y			1112003901	**506651**	N	
2.0 i	*638/.014/.114*	E	1998	111.948	M	Y		01/96 ▸ 09/03	1112003801	**506650**	N	
2.0 i	*638/.014/.114*	E	1998	111.948	A	Y		01/96 ▸ 09/03	1112003801	**506650**	N	
2.0 i	*638/.014/.094/.114/.194*	E	1998	111.950, 111.948	A	Y		01/96 ▸ 09/03	1112003901	**506651**	N	

• **New** Nouveau **Nuevo** Novo **Nuovo** Nieuw **Neu** Yeni Новый Nou

		Type Ctr.		cc						OE	Valeo	
MERCEDES (.../...)												
Vito (96>2003) (.../...)												
2.3 i	*638/.034/.094/.134/.194*	E		2295	111.980, 111.978	M	Y		12/96 ▸ 09/03	1112003901	**506651**	N
2.3 i	*638/.034/.134*	E		2295	111.978	M	Y		12/96 ▸ 09/03	1112003801	**506650**	N
2.3 i	*638/.034/.134*	E		2295	111.978	A	Y		12/96 ▸ 09/03	1112003801	**506650**	N
2.3 i	*638/.034/.094/.134/.194*	E		2295	111.978, 111.980	A	Y		12/96 ▸ 09/03	1112003901	**506651**	N
2.2 CDI	*638/.094/.194*	D		2151	611.980	M	Y		03/99 ▸ 09/03	6112001001	**506833**	SS
2.2 CDI	*638/.094/.194*	D		2151	611.980	A	Y		03/99 ▸ 09/03	6112001001	**506833**	SS
2.3 D,2.3 TD	*638/.064/.068/.074/.078 .164/.174*	D		2299	601.942, 601.970	M	Y		01/96 ▸ 09/03	6022000520	**506060**	N
Vito (2003>)												
3.2 i	*639/6011/6031/6051/7011/7031/7051*	E		3199	112.951	A	Y		01/03 ▸	1122001401	**506787**	N
3.2 i	*639/6011/6031/6051/7011/7031/7051*	E		3199	112.951	A	Y		01/03 ▸	1122001501	**506832**	SS
2.2 CDI 16V	*639/6011/6031/6051/7011 7031/7051*	D		2148	646.982,646.983	M	Y		01/03 ▸	6462001001	**506926**	N
2.2 CDI 16V	*639/.601/.603/.605/.701 .703/.705/.711/.713/.811 .813/.815*	D		2148	646.982	A	Y		09/06 ▸	6462001001	**506926**	N
MG												
MG F												
1.6 i 16V	*RDWB*	E		1589	16K4F4	M	Y		02/00 ▸ 03/02	PEB102510	**506696**	CR
1.8 i 16V,1.8 i VVC 16V	*RDWB*	E		1796	18K4K, 18K4F	M	Y		03/95 ▸	GWP333	**506114**	CR
MG TF												
1.6 i 16V		E		1589	16K4F4	M	Y		03/02 ▸ 04/05	PEB102510L	**506696**	CR
1.8 i VVC 16V		E		1795	18K4F,18K4K	M	Y		03/02 ▸ 04/05	PEB102510	**506696**	CR
1.8 i 16V		E		1796	18K4F,18K4K	A	Y		03/02 ▸ 04/05	PEB102510	**506696**	CR
MG ZR												
1.4 i 16V	555555 ▸	E		1396	14K4F4	M	Y		2001 ▸	PEB102510	**506696**	CR
1.4 i 16V	▸ 555554	E		1396	14K4F4	M	Y		06/01 ▸ 2001	PEB10051	**506114**	CR
1.8 i 16V	555555 ▸	E		1796	18K4F	M	Y		2001 ▸	PEB102510	**506696**	CR
1.8 i 16V	555555 ▸	E		1796	18K4F	A	Y		2001 ▸	PEB102510	**506696**	CR
1.8 i 16V	▸ 555554	E		1796	18K4F	M	Y		06/01 ▸ 2001	PEB10051	**506114**	CR
1.8 i 16V	▸ 555554	E		1796	18K4F	A	Y		06/01 ▸ 2001	PEB10051	**506114**	CR
2.0 TD		D		1994	20T2N	M	Y		05/02 ▸	PEB102420	**506320**	N
2.0 TD		D		1996	20T2N	M	Y		05/02 ▸	PEB102420	**506320**	N
MG ZS												
1.6 i 16V		E		1588	16K4F4	M	Y		07/01 ▸	PEB10051	**506114**	CR
1.6 i 16V		E		1588	16K4F4	M	Y		07/01 ▸	PEB102510	**506696**	CR
1.8 i 16V		E		1796	18K4F	M	Y		07/01 ▸	PEB10051	**506114**	CR
1.8 i 16V		E		1796	18K4F	M	Y		07/01 ▸	PEB102510	**506696**	CR
1.8 i 16V		E		1796	18K4F	A	Y		07/01 ▸	PEB10051	**506114**	CR
1.8 i 16V		E		1796	18K4F	A	Y		07/01 ▸	PEB102510	**506696**	CR
2.5 i V6 24V		E		2497	25KV6-177	M	Y		07/01 ▸	PEB102240	**506842**	SS
2.0 TD		D		1994	20T2N	M	Y		05/02 ▸	PEB102010	**506320**	N
2.0 TD		D		1996	20T2N	M	Y		05/02 ▸	PEB102010	**506320**	N
MG ZT												
1.8 i Turbo 16V		E		1795	18K4T	M	Y		06/01 ▸	PEB102510	**506696**	CR
1.8 i 16V		E		1796	18K4F	M	Y		06/01 ▸	PEB102510	**506696**	CR
2.5 i V6 24V		E		2497	25K6, 25KV6-177	M	Y		10/01 ▸	PEB102240	**506842**	SS
2.5 i V6 24V		E		2497	25KV6-177	A	Y		10/01 ▸	PEB102240	**506842**	SS
4.6 i V8 32V		E		4601	46K8	M	Y		09/03 ▸ 04/05	PEB102010	**506320**	N

• **New** Nouveau **Nuevo** Novo **Nuovo** Nieuw **Neu** Yeni Новый Nou

Valeo

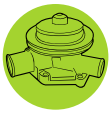

											OE	Valeo		
MG (.../...)													
MG ZT (.../...)													
2.0 CDTi 16V		D	1951	M47R, 204D2	M	Y	CH: 5	12/02 ▸		PEB102470	**506710**	vvv	
2.0 CDTi 16V		D	1951	204D2	A	Y	CH: 5	12/02 ▸		PEB102470	**506710**	vvv	
MINI													
MINI (2001>)													
1.6 i 16V	*RA31, RA30, RC31*	E	1598	W10B16A-90, W10B16A-115	A	N		09/01 ▸		11517510803	**506788**	vvv	
1.6 i 16V	*RC31, RA31, RF31, RA30 RD31*	E	1598	W10B16A-115, W10B16A-90	M	N		09/01 ▸		11517510803	**506788**	vvv	
1.4 CRTDI,1.4 d	*RB11, RB10*	D	1364	1ND,1ND-TV	M	Y		05/03 ▸		11517790871	**506907**	N	
MINI (2006>)													
1.4 i 16V	*ME32, M, ME31*	E	1397	N12B14A	M	Y		03/07 ▸		11517550484	**506914**	N	
1.4 i 16V	*ME42, ME41*	E	1397	N12B14A	A	Y		03/07 ▸		11517550484	**506914**	N	
1.6 i 16V,1.6 i Turbo 16V	*MR31, MF71, MF, MF31 MS32, MF32, MS31, MF72 MR32, MS91*	E	1598	N12B16A,N14B16A,N14B16C	M	Y		11/06 ▸		11517550484	**506914**	N	
1.6 i 16V,1.6 i Turbo 16V	*MF42, MR41, MF81, MS41 MF41, MF82*	E	1598	N12B16A,N14B16A	A	Y		11/06 ▸		11517550484	**506914**	N	
1.6 d 16V	*MG32, MG31*	D	1560	9HZ	M	Y		03/07 ▸		11517805992	**506715**	CR	
MINI (2009>)													
1.4 i 16V,1.4 i 75 16V		E	1397	N12B14A	M	Y		03/09 ▸		11517550484	**506914**	N	
1.4 i 16V		E	1397	N12B14A	A	Y		03/09 ▸		11517550484	**506914**	N	
1.6 i 16V,1.6 i Turbo 16V		E	1598	N12B16A,N18B16A	M	Y		05/09 ▸		11517550484	**506914**	N	
1.6 i 16V,1.6 i Turbo 16V		E	1598	N12B16A,N18B16A	A	Y		05/09 ▸		11517550484	**506914**	N	
MINI Clubman													
1.4 i 16V	*MH32, MH31*	E	1397	N12B14A	M	Y		08/07 ▸		11517550484	**506914**	N	
1.6 i 16V,1.6 i Turbo 16V	*MM31, MM92, MM91, ML31 MM32, ML32*	E	1598	N12B16A,N14B16A,N14B16C W11B16A-163	M	Y		08/07 ▸		11517550484	**506914**	N	
1.6 i 16V	*ML41, ML42, MM42, MM41*	E	1598	N12B16A,N14B16A	A	Y		08/07 ▸		11517550484	**506914**	N	
1.6 d 16V	*MN51, MN52*	D	1560	9HZ	M	Y		08/07 ▸		11517805992	**506715**	CR	
1.6 d 16V	*MN61, MN62*	D	1560	9HZ	A	Y		08/07 ▸		11517805992	**506715**	CR	
MINI Roadster (R59)													
1.6 i 16V,1.6 i Turbo 16V	*SY51, SY31, SY32, SY12 SY52, SY11*	E	1598	N14B16C,N16B16A,N18B16A	M	Y		03/12 ▸		11517550484	**506914**	N	
1.6 i 16V,1.6 i Turbo 16V	*SY22, SY41, SY42, SY21*	E	1598	N16B16A,N18B16A	A	Y		03/12 ▸		11517550484	**506914**	N	
MITSUBISHI													
3000 GT													
3.0 i Turbo	*Z11/AMNP, Z16/AMJG/AMNG*	E	2972	6G72-4H, 6G72-4L, 6G72-GG	M	Y		04/90 ▸ 03/00		MD972005	**506633**	SS	
3.0 i Turbo	*Z11AMRP*	E	2972	6G72-4V	A	Y		04/90 ▸ 05/93		MD972005	**506633**	SS	
Carisma (95>99)													
1.8 GDI 16V	*DA2/ALND/ALNJ/ALNP/ASND ASNJ/ASNP*	E	1834	4G93-G10	M	Y		05/97 ▸ 02/99		MD346790	**506835**	CR	
1.8 GDI 16V	*DA2/ALRD/ALRJ/ALRP/ASRD ASRJ/ASRP*	E	1834	4G93-G30	A	Y		05/97 ▸ 02/99		MD346790	**506835**	CR	
1.9 TD	*DA4/ALND/ALNJ/ALNP/ALNX ASND/ASNJ/ASNP/ASNX*	D	1870	F8Q	M	Y		05/96 ▸ 02/99		M855991	**506019**	N	
Carisma (99>)													
1.8 GDI 16V,1.8 i 16V	*DA2/ALNG/ALNS/ALNU/ALNX ASNG/ASNS/ASNU/ASNX*	E	1834	4G93-H, 4G93-G83, 4G93-G82	M	Y		03/99 ▸ 12/03		MD346790	**506835**	CR	
1.8 GDI 16V,1.8 i 16V	*DA2/ALRG/ALRU/ALRX/ASRG ASRU*	E	1834	4G93-GDI, 4G93-G36	A	Y		03/99 ▸ 12/03		MD346790	**506835**	CR	
1.9 TD	*DA4/ALNS/ALNU/ASNS/ASNU*	D	1870	F8Q	M	Y		03/99 ▸		M855991	**506019**	N	

• **New** Nouveau **Nuevo** Novo **Nuovo** Nieuw **Neu** Yeni Новый Nou

		Type Ctr.	cc					2 3	OE	Valeo		
MITSUBISHI (.../...)												
Carisma (99>) (.../...)												
1.9 DI-D	*DA5/ALNG/ALNS*	D	1870	F9Q1, F9Q2	M	Y		03/99 ▸	MW30620725	●506698	SS	
Challenger												
2.5 TD	*K94/WGNH/WNUF/WNUP*	D	2477	4D56T-4P	M	Y		10/98 ▸	MD972002	506736	N	
Colt II (84>87)												
1200	*C15/ALFD/ALND/AMFD/AMFM/AMND*	E	1198	4G16	M	Y		01/84 ▸ 06/88	MD974649	506406	N	
1300	*C11/ALND/AMNM*	E	1299	G13B	M	Y		06/86 ▸ 06/88	MD974649	506406	N	
1500	*C12/ALNJ/AMND/AMNJ*	E	1468	G15B, 4G15	M	Y		01/84 ▸ 02/89	MD974649	506406	N	
1500	*C12/ALKJ/AMKJ*	E	1468	4G15, G15B	A	Y		01/84 ▸ 02/89	MD974649	506406	N	
1600 Turbo	*C13AMNJ*	E	1597	4G32T	M	Y		01/84 ▸ 06/88	MD997619	506404	N	
Colt III (87>91)												
1300	*C51/AMFM/AMND/AMNM/VMFM/VMNM*	E	1299	4G13-ESI, 4G13	M	Y		04/88 ▸ 05/92	MD974649	506406	N	
1500	*C52/AMND/AMNJ*	E	1468	4G15-MPIC, 4G15, 4G15-MPI	M	Y		04/88 ▸ 05/92	MD974649	506406	N	
1500	*C52/AMKJ/AMRD/AMRJ*	E	1468	4G15-MPIC, 4G15	A	Y		04/88 ▸ 05/92	MD974649	506406	N	
1800 16V	*C58AMNG*	E	1836	4G67, 4G67-C	M	Y		11/89 ▸ 05/92	MD972052	506617	N	
Colt IV (91>96)												
1.3	*CA1/AMND/AMNJ/AMNM*	E	1299	4G13-2J	M	Y		12/91 ▸ 12/96	MD974649	506406	N	
Colt V (96>2003)												
1.3 i,1.3 i 12V,1.3 i 16V	*CJ1/AMND/AMNJ*	E	1299	4G13-38,4G13-380,4G13-6	M	Y		11/95 ▸	MD323372	506900	N	
1.3 i 12V	*CJ1AMRJ*	E	1299	4G13-38,4G13-380,4G13-6	A	Y		11/95 ▸ 05/00	MD323372	506900	N	
1.5	*CJ2AMNJ*	E	1468	4G15	M	Y		11/95 ▸ 05/00	MD323372	506900	N	
1.6 i	*CJ4/AMND/AMNJ/AMNU*	E	1597	4G92-31, 4G92, 4G92-38	M	Y		11/95 ▸	MD309756	506835	CR	
1.6 i	*CJ4/AMRJ/AMRU*	E	1597	4G92-31, 4G92, 4G92-38	A	Y		11/95 ▸	MD309756	506835	CR	
Colt VI (2004>)												
1.1 i	*Z32/AMNL/AMNX/AXNL/AXNX*	E	1124	3A91	M	Y		08/04 ▸	MN143664	506962	N	
1.3 i Mivec	*Z34/AMJL/AMNL/AMNX/AXJL AXNL/AXNX*	E	1332	4A90	M	Y		04/04 ▸ 09/08	MN143664	506962	N	
1.5 i Mivec 16V	*Z36/ABNM/AMNL/AMNX/AXJL AXNL/AXNX*	E	1499	4A91	M	Y		04/04 ▸ 09/08	MN143664	506962	N	
1.5 DI-D	*Z38/AMNL/AXNL, Z39/AMNL AMNX/AXJL/AXNL/AXNX/VMNL*	D	1493	D3-EA	M	Y		08/04 ▸ 09/08	MN960330	506899	N	
Eclipse												
2.0 i 16V,2.0 i Turbo 16V	*D27AMNG, D22/AMNH/AMNP*	E	1997	4G63-5D, 4G63-5B, 4G63-5L 4G63-78	M	Y		12/89 ▸	MD972052	506617	N	
2.0 i 16V	*D22AMRH*	E	1997	4G63-5D	A	Y		12/89 ▸ 03/94	MD972052	506617	N	
2.0 i Turbo 16V	*D32AMNH*	E	1997	4G63-7L	M	Y		08/95 ▸ 04/99	MD972050	506936	N	
Galant (80>84)												
2000,2000 Turbo	*A16/3ANJ/4ANS/4NTL/4NTR*	E	1997	4G63T, 4G63-C	M	Y		05/80 ▸ 05/84	MD997615	506405	N	
2000	*A164AKS*	E	1997	4G63-C	A	Y		05/80 ▸ 05/84	MD997615	506405	N	
2300 TD	*A167AQT*	D	2346	4D55T	M	Y		05/80 ▸ 05/84	MD972001	506778	N	
Galant (DJ/DM) (2006>)												
2.4 i 16V	*DJ1/ASRH/ASRX, DM1/ASRH ASRX*	E	2378	4G69	A	Y		07/06 ▸	1300A066	506934	N	
Galant II (84>87)												
1.6	*E11/ASND/ASNJ/ASNU*	E	1597	4G32	M	Y		05/84 ▸ 11/87	MD997619	506404	N	
2.0,2.0 Turbo	*E15/ASNG/ASNH/ASNJ*	E	1997	4G63-C, 4G63T, G63B	M	Y		05/84 ▸ 11/87	MD997614	506407	N	
2.0	*E15ASRH*	E	1997	4G63-C	A	Y		05/84 ▸ 11/87	MD997614	506407	N	
2.4	*E16ASNH*	E	2351	G64B	M	Y		06/86 ▸ 11/87	MD997614	506407	N	
2.4	*E16ASRH*	E	2351	G64B	A	Y		07/85 ▸ 11/87	MD997614	506407	N	
Galant III (87>92)												
1.6	*E31/ASND/ASNJ*	E	1597	4G32	M	Y		11/87 ▸ 10/92	MD997619	506404	N	
1.6	*E31ASRH*	E	1597	4G32	A	Y		11/87 ▸ 10/92	MD997619	506404	N	
1.8	*E32/ALNH/ALNJ/ASNH/ASNJ/ASNU*	E	1755	4G37-7F, 4G37-7J, 4G37	M	Y		11/87 ▸ 10/92	MD997619	506404	N	

• **New** Nouveau **Nuevo** Novo **Nuovo** Nieuw **Neu** Yeni Новый Nou

Valeo

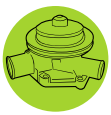

			E	1755	4G37, 4G37-7J, 4G37-7F	A	Y		11/87 ▸ 10/92	MD997619	**506404**	N
2.0,2.0 16V	*E33/ALNG/ALNH/ALNJ/ALNU ASNG/ASNH/ASNJ, E38/ALNH ASNH, E39/ALNG/ALNH/ASNG ASNH*	E	1997	4G63-5F, 4G63-5, 4G63-5B 4G63-3L, 4G63, 4G63-3P	M	Y		11/87 ▸ 10/92	MD997622	**506617**	N	
2.0	*E33/ALRH/ALRU/ASRH/ASRU*	E	1997	4G63-3L, 4G63	A	Y		11/87 ▸ 10/92	MD997622	**506617**	N	
Galant IV (92>96)												
2.0 16V	*E55/ALNH/ALNJ/ASNH/ASNJ E75/ALNH/ASNH*	E	1997	4G63-68	M	Y		11/92 ▸ 05/96	MD972050	**506936**	N	
2.0 16V	*E55/ALRH/ASRH*	E	1997	4G63-6M	A	Y		11/92 ▸ 09/96	MD972050	**506936**	N	
2.5 V6 24V	*E88/ALNG/ASNG*	E	2497	6G73	M	Y		11/92 ▸ 05/96	MD972005	**506633**	SS	
2.0 TD	*E57/ALNH/ALNJ/ASNH/ASNJ*	D	1998	4D68T-1	M	Y		11/92 ▸ 09/96	MD972054	**506857**	N	
Galant V (96>2003)												
2.0 i 16V	*EA2/ASNH/ASNJ/WLNH/WLNJ*	E	1997	4G63-6,4G63-6G,4G63-6GR 4G63-6T	M	Y		10/96 ▸ 05/03	MD974899	●**506815**	N	
2.0 i 16V	*EA2/ASRH/ASRJ/WLRH/WLRJ*	E	1997	4G63-6,4G63-6G,4G63-6GR 4G63-6M,4G63-6T	A	Y		10/96 ▸ 05/03	MD974899	●**506815**	N	
2.4 GDI,2.4 i	*EA3/ASNH/ASNJ/WLNH/WLNJ*	E	2351	4G64-41,4G64-418,4G64-41R 4G64-43	M	Y		12/98 ▸ 05/03	MD976464	●**506815**	N	
2.4 GDI,2.4 i	*EA3/ASRH/ASRJ/WLRH/WLRJ*	E	2351	4G64-41,4G64-418,4G64-41R 4G64-43	A	Y		12/98 ▸ 05/03	MD976464	●**506815**	N	
Grandis												
2.4 i	*NA4/WLNH/WLNJ*	E	2378	4G69	M	Y		01/04 ▸	MD979395	**506934**	N	
2.4 i	*NA4/WLRH/WLRJ*	E	2378	4G69	A	Y		01/04 ▸	MD979395	**506934**	N	
2.0 DI-D	*NA8/WLJF/WLJH/WLJM/WLJU*	D	1968	BSY,BSY/F	M	Y		06/05 ▸	MN980134	**506699**	CR	
Lancer (2007>)												
1.5 MIVEC 16V	*CY2/ASNL/ASNS*	E	1499	4A91	M	Y		03/07 ▸	MN143664	**506962**	N	
1.5 MIVEC 16V	*CY2ASRS*	E	1499	4A91	A	Y		03/07 ▸	MN143664	**506962**	N	
1.8 MIVEC 16V	*CY3/ASNS/ASNX*	E	1798	4B10	M	Y		01/08 ▸	1300A069	**506956**	N	
1.8 MIVEC 16V	*CY3/ASTS/ASTX*	E	1798	4B10	A	Y		01/08 ▸	1300A069	**506956**	N	
Lancer (CB/CD4) (92>96)												
2.0 D	*CB8/WLND/WLNJ*	D	1998	4D68-0E, 4D68-0A	M	Y		06/92 ▸ 05/96	MD972054	**506857**	N	
Lancer (CK1/CP) (96>)												
1.3 i	*CK1/ASND/ASNJ*	E	1299	4G13-38	M	Y		11/95 ▸	MD323372	**506900**	N	
1.3 i	*CK1ASRJ*	E	1299	4G13-38	A	Y		11/95 ▸	MD323372	**506900**	N	
1.5	*CK2ASNJ*	E	1468	4G15-5	M	Y		11/95 ▸	MD323372	**506900**	N	
1.5	*CK2ASRJ*	E	1468	4G15-5	A	Y		11/95 ▸	MD323372	**506900**	N	
1.6 i	*CK4ASNJ*	E	1597	4G92-38	M	Y		12/97 ▸	MD309756	**506835**	CR	
Lancer (CS) (2003>)												
1.3 16V	*CS1ASNJ*	E	1299	4G13-6	M	Y		06/03 ▸	MD370803	**506900**	N	
1.6 i 16V	*CS3/ASNJ/WLNH/WLNJ*	E	1584	4G18-6	M	Y		06/03 ▸	MD370803	**506900**	N	
1.6 i 16V	*CS3/ASRJ/WLRJ*	E	1584	4G18-6	A	Y		06/03 ▸	MD370803	**506900**	N	
2.0 i 16V	*CS9/ASNH/WLNH/WLNJ*	E	1997	4G63-7	M	Y		06/03 ▸	1300A069	**506956**	N	
2.0 i 16V	*CS9ASRH*	E	1997	4G63-7	A	Y		09/05 ▸	1300A069	**506956**	N	
Lancer Evolution												
2.0 i Turbo	*CN9/ASND, CP9/ASND/ASNG CT9/ASJG/ASND/ASNG*	E	1997	4G63-774,4G63-7TC,4G63-7Z1	M	Y		08/96 ▸ 07/07	1300A069	**506956**	N	
2.0 i Turbo	*CP9/ASND/ASNG*	E	1997	4G63-7TC	M	Y		02/99 ▸ 09/00	MD977311	●**506815**	N	
Lancer F (C1) (84>88)												
1200	*C15/ASFD/ASFM/ASND*	E	1198	4G16	M	Y		01/84 ▸ 06/88	MD974649	**506406**	N	
1500	*C12ASNJ*	E	1468	G15B, 4G15	M	Y		01/84 ▸ 06/88	MD974649	**506406**	N	
1500	*C12ASKJ*	E	1468	G15B, 4G15	A	Y		01/84 ▸ 06/88	MD974649	**506406**	N	
Lancer F (C6/7) (88>95)												
1200	*C65ASND*	E	1198	4G16	M	Y		04/88 ▸ 05/92	MD974649	**506406**	N	

• **New** Nouveau **Nuevo** Novo **Nuovo** Nieuw **Neu** Yeni Новый Nou

		Type Ctr.		cc						OE	Valeo	
MITSUBISHI (.../...)												
Lancer F (C6/7) (88>95) (.../...)												
1300	C61/ALND/ASFM/ASND/ASNJ/ASNM	E	1299	4G13, 4G13-ESI, 4G13-MPI	M	Y		04/88 ▸ 07/95	MD974649	**506406**	N	
1300	C61/ASKD/ASKJ	E	1299	4G13	A	Y		10/87 ▸ 05/92	MD974649	**506406**	N	
1500	C62/ALND/ALNJ/ASND/ASNJ/ASNM	E	1468	4G15-MPI, 4G15, 4G15-ECI	M	Y		04/88 ▸ 07/95	MD974649	**506406**	N	
1500	C62/ALKJ/ALRJ/ASKJ/ASRJ/ASRM	E	1468	4G15, 4G15-MPI, 4G15-ECI	A	Y		04/88 ▸ 05/93	MD974649	**506406**	N	
1800	C77LNJE	E	1755	4G37-7G	M	Y		05/89 ▸ 05/92	MD997619	**506404**	N	
1800 16V	C68/ALNG/ASNG	E	1836	4G67, 4G67-C	M	Y		11/89 ▸ 05/92	MD972052	**506617**	N	
2000 D	C67/ALND/ALNJ	D	1998	4D68-0F, 4D68	M	Y		06/92 ▸ 07/95	MD972054	**506857**	N	
Lancer F (CB/CD) (92>96)												
1.3	CB1/ASND/ASNJ/ASNM	E	1299	4G13-2J	M	Y		12/91 ▸ 12/96	MD974649	**506406**	N	
1.5	CB2ASNJ	E	1468	4G15-5	M	Y		12/91 ▸ 10/96	MD974649	**506406**	N	
1.5	CB2ASKJ	E	1468	4G15-5	A	Y		12/91 ▸ 10/96	MD974649	**506406**	N	
2.0 D	CB8/ASND/ASNJ/ASNM	D	1998	4D68-0A, 4D68-0E	M	Y		05/92 ▸ 12/96	MD972054	**506857**	N	
Lancer F (CV)												
1500	C12/VLND/VLNJ	E	1468	G15B, 4G15, 4G15-MPI	M	Y		07/85 ▸ 03/92	MD974649	**506406**	N	
1500	C12VLKJ	E	1468	G15B, 4G15, 4G15-MPI	A	Y		07/87 ▸ 03/92	MD974649	**506406**	N	
1800	C37/VLND/VLNJ	E	1755	G37B, 4G37, 4G37-MPI	M	Y		11/86 ▸ 03/92	MD997619	**506404**	N	
Montero Sport												
2.5 TD	K94/WGNH/WNUF/WNUP	D	2477	4D56T-4P,4D56T-4P-115	M	Y		08/98 ▸ 02/09	MD972002	**506736**	N	
Outlander												
2.0 i 16V,2.0 i Turbo 16V	CU2/WXNH/WXNM/WXNX	E	1997	4G63-7T3,4G63-7TU	M	Y		06/03 ▸	MD978552	**506956**	N	
2.4 i 16V	CU5/WXNH/WXNM	E	2378	4G69-2	M	Y		09/03 ▸ 12/08	1300A066	**506934**	N	
2.4 i 16V	CU5/WXRH/WXRM	E	2378	4G69-2	A	Y		09/03 ▸ 12/08	MD979395	**506934**	N	
Pajero I (82>91)												
2.6,2.6 i	L04/2GNJ/2GVN/7GWM/7GWN	E	2555	4G54-1G, G54B	M	Y		01/83 ▸ 06/91	MD975292	**506689**	N	
2.3 TD	L04/3GNT/3GVN/8GWN	D	2346	4D55T	M	Y		01/83 ▸ 04/86	MD972001	**506778**	N	
2.5 TD	L04/4GNF/4GNT/4GVN/9GVM 9GWM/9GWN, L14/4GNF/4GVN 9GWM/9GWN	D	2477	4D56T	M	Y		05/86 ▸ 06/91	MD972001	**506778**	N	
2.5 TD	L04/4GVR/9GWM/9GWR, L14 4GVR/9GWM	D	2477	4D56T	A	Y		05/86 ▸ 06/91	MD972001	**506778**	N	
Pajero II (91>99)												
2.4 i	V41WNHE, V21/CNSE/WNHE	E	2351	4G64	M	Y		12/90 ▸ 04/92	MD997615	**506405**	N	
2.6 i	V12VNDL, V32WNHL	E	2555	4G54-1HL	M	Y		04/91 ▸ 05/95	MD975291	**506736**	N	
3.0 i V6	V43WGRX, V23/CGRH/WGRX	E	2972	6G72-1	A	Y		12/90 ▸ 05/94	MD972004	**506408**	SS	
2.5 TD	V24/CNSF/CNSG/WGNC/WGND WGNH/WGNX/WNAF/WNBF/WNDF WNDG/WNHF/WNHG, V44/WGND WGNX/WNDF/WNDG/WNHF/WNHG	D	2477	4D56T-5, 4D56T-2D, 4D56T-4 4D56T-1, 4D56T-4P	M	Y		12/90 ▸	MD972002	**506736**	N	
2.5 D	V34VHND, V14/CNSR/VNDR/VNDT	D	2477	4D56	M	Y		04/91 ▸ 05/99	MD972001	**506778**	N	
2.5 TD	V44/WGRX/WRHF	D	2477	4D56T-1	A	Y		12/90 ▸	MD972002	**506736**	N	
2.8 D,2.8 TD	V36VHND, V26/WGNC/WGNH WGNX/WNHF/WNHG, V46/WGNC WGNX/WNAF/WNBF/WNDF/WNDG WNHF/WNHG	D	2835	4M40-2A, 4M40-0A, 4M40-0AZ	M	Y		11/93 ▸	ME993474	**506734**	V+V	
2.8 TD	V46/WGRC/WGRX/WRBF/WRHF WRHG	D	2835	4M40-0A, 4M40-2A	A	Y		11/93 ▸	ME993474	**506734**	V+V	
Pajero III (2000>)												
3.5 GDI V6 24V	V65/WMNH/WMNX, V75/WLNH WLNX	E	3497	6G74-B	M	Y		02/00 ▸ 08/06	MD977503	**506958**	SS	
3.5 GDI V6 24V	V65/WMYH/WMYX, V75/WLYH WLYX	E	3497	6G74-B	A	Y		02/00 ▸ 08/06	MD977503	**506958**	SS	
3.2 DI-D	V68/WMNC/WMND/WMNH/WMNX V78/WLNB/WLNC/WLND/WLNH WLNX	D	3200	4M41, 4M410A	M	Y		02/00 ▸	ME993473	**506734**	V+V	

• **New** Nouveau **Nuevo** Novo **Nuovo** Nieuw **Neu** Yeni Новый Nou

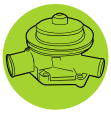

MITSUBISHI (.../...)

Pajero III (2000>) (.../...)

3.2 DI-D	V68/WMYC/WMYH/WMYX, V78 WLYB/WLYC/WLYH/WLYX	D	3200	4M41, 4M410A	A	Y		02/00 ▸	ME993473	**506734**	V+V	

Pajero IV (2006>)

3.0 i V6 24V	V93WLNH	E	2972	6G72-8-G3	M	Y		01/07 ▸	MD979171	**506958**	SS	
3.0 i V6 24V	V93WLRH	E	2972	6G72-8-G3	A	Y		01/07 ▸	MD979171	**506958**	SS	
3.8 i V6 24V	V87WMYX, V97WLYX	E	3828	6G75-8	A	Y		09/06 ▸	MD979171	**506958**	SS	

Pajero Pinin (99>)

1.8 GDI 16V,1.8 i 16V	H76WLND, H66/WMND/WMNJ	E	1834	4G93-D, 4G93-H	M	Y		08/99 ▸	MD346790	**506835**	CR	
1.8 GDI 16V,1.8 i 16V	H76WLRD, H66/WMRD/WMRJ	E	1834	4G93-D, 4G93-H	A	Y		08/99 ▸	MD346790	**506835**	CR	
2.0 GDI 16V	H67WMNJ, H77WLNJ	E	1999	4G94-H	M	Y		07/00 ▸	MD346790	**506835**	CR	
2.0 GDI 16V	H67WMRJ, H77WLRJ	E	1999	4G94-H	A	Y		07/00 ▸	MD346790	**506835**	CR	

Pajero Sport (98>2009)

3.0 i V6 24V	K96WGNH	E	2972	6G72-8-GG	M	Y		08/98 ▸	MD973162	**506539**	SS	
2.5 TD	K94/WGNH/WNUF/WNUP	D	2477	4D56T-4P-115, 4D56T-4P	M	Y		08/98 ▸	MD972002	**506736**	N	

Shogun 1 (L0/1)

2.6	L04/2GNJ/2GVN/7GWM/7GWN	E	2555	4G54-1G	M	Y		01/83 ▸ 06/91	MD975292	**506689**	N	
2.3 TD	L04/3GNT/3GVN/8GWN	D	2346	4D55T	M	Y		01/83 ▸ 04/86	MD972001	**506778**	N	
2.5 TD	L04/4GVN/9GWM/9GWN, L14 4GVN/9GWM/9GWN	D	2477	4D56-05, 4D56-14, 4D56-09	M	Y		05/86 ▸ 06/91	MD972001	**506778**	N	
2.5 TD	L149GWM, L04/9GWM/9GWR	D	2477	4D56-14, 4D56-09, 4D56-05	A	Y		05/86 ▸ 06/91	MD972001	**506778**	N	

Shogun 2 (V2/4)

2.5 TD	V24/WGNX/WNHF/WNHG, V44 WGNX/WNHF	D	2477	4D56T-1, 4D56T-4P	M	Y		12/90 ▸	MD972002	**506736**	N	
2.5 D	V34VHND, V14/CNSR/VNDR	D	2477	4D56	M	Y		04/91 ▸ 05/99	MD972001	**506778**	N	
2.5 TD	V44/WGRX/WRHF	D	2477	4D56T-1	A	Y		12/90 ▸	MD972002	**506736**	N	
2.8 D,2.8 TD	V36VHND, V26/WGNX, V46 WGNX/WNHF/WNHG	D	2835	4M40-2A, 4M40-0A, 4M40-0AZ	M	Y		11/93 ▸	ME993473	**506734**	V+V	
2.8 TD	V46/WGRX/WRHF/WRHG	D	2835	4M40-0A, 4M40-2A	A	Y		11/93 ▸	ME993473	**506734**	V+V	

Shogun 3 (V6/7)

3.5 GDI V6 24V	V65/WMNH/WMNX, V75/WLNH WLNX	E	3497	6G74-B	M	Y		02/00 ▸ 08/06	MD977503	**506958**	SS	
3.5 GDI V6 24V	V65/WMYH/WMYX, V75/WLYH WLYX	E	3497	6G74-B	A	Y		02/00 ▸ 08/06	MD977503	**506958**	SS	
3.2 DI-D	V68/WMNC/WMNH/WMNX, V78 WLNB/WLNC/WLNH/WLNX	D	3200	4M410A	M	Y		02/00 ▸	ME993473	**506734**	V+V	
3.2 DI-D	V68/WMYC/WMYH/WMYX, V78 WLYB/WLYC/WLYH/WLYX	D	3200	4M410A	A	Y		02/00 ▸	ME993473	**506734**	V+V	

Shogun 4 (2006>)

3.8 i V6 24V	V87WMYX, V97WLYX	E	3828	6G75-8	A	Y		09/06 ▸	MD979171	**506958**	SS	

Shogun Pinin (99>)

1.8 GDI 16V,1.8 i 16V	H76WLND, H66/WMND/WMNJ	E	1834	4G93-H, 4G93-D	M	Y		08/99 ▸	MD346790	**506835**	CR	
1.8 GDI 16V,1.8 i 16V	H76WLRD, H66/WMRD/WMRJ	E	1834	4G93-H, 4G93-D	A	Y		08/99 ▸	MD346790	**506835**	CR	
2.0 GDI 16V	H67WMNJ, H77WLNJ	E	1999	4G94-H	M	Y		07/00 ▸	MD346790	**506835**	CR	
2.0 GDI 16V	H67WMRJ, H77WLRJ	E	1999	4G94-H	A	Y		07/00 ▸	MD346790	**506835**	CR	

Sigma

3.0 i V6 24V	F16ASNU	E	2972	6G724	M	Y		10/90 ▸	MD997643	**506633**	SS	
3.0 i V6 12V	F07WLNU, F16ASNH	E	2972	6G721	M	Y		12/90 ▸	MD980000	**506408**	SS	
3.0 i V6 24V	F16/ASNX/ASRP/ASRX	E	2972	6G724	A	Y		12/90 ▸	MD997643	**506633**	SS	
3.0 i V6 12V	F07WLRU, F16ASRH	E	2972	6G721	A	Y		12/90 ▸	MD980000	**506408**	SS	

Space Gear

2.5 TD	PC5WHSZ	D	2477	4D56T-2E	M	Y		12/94 ▸ 05/95	MD972001	**506778**	N	
2.5 TD	PD5WNLN, PA5/WNLN/WNLZ	D	2477	4D56T-4, 4D56T-2E	M	Y		12/94 ▸	MD972002	**506736**	N	

Space Runner

2.0 i	N63/WSND/WSNF/WSNU	E	1997	4G63-MPI	M	Y		05/99 ▸ 2002	MD976464	●**506815**	N	

• **New** Nouveau **Nuevo** Novo **Nuovo** Nieuw **Neu** Yeni Новый Nou

			CC						OE	Valeo			
MITSUBISHI (.../...)													
Space Runner (.../...)													
2.0 i	*N63/WSRD/WSRF/WSRU*	E	1997	4G63-MPI	A	Y		05/99 ▸ 2002	MD976464	●506815	N	
2.4 GDi	*N64/WSNG/WSNH/WSNJ*	E	2351	4G64-414	M	Y		05/99 ▸ 2002	MD976464	●506815	N	
2.4 GDi	*N64/WSRG/WSRH/WSRJ*	E	2351	4G64-414	A	Y		05/99 ▸ 2002	MD976464	●506815	N	
2.0 TD	*N18/WSNJ/WSNU*	D	1998	4D68T	M	Y		06/92 ▸	MD972054	506857	N	
Space Star													
1.8 GDi,1.8 GDi 16V	*DG5/ALND/ALNJ/ALNM/ALNP*	E	1834	4G93-H, 4G93	M	Y		10/98 ▸ 2004	MD346790	506835	CR	
1.8 GDi,1.8 GDi 16V	*DG5/ALRJ/ALRM/ALRP*	E	1834	4G93-H, 4G93	A	Y		06/00 ▸ 2004	MD346790	506835	CR	
1.9 DI-D	*DG4/ALND/ALNJ/ALNM/ALNP*	D	1870	F9Q2, F9Q1	M	Y		06/00 ▸	MW30620725	●506698	SS	
Space Wagon (86>91)													
1.8	*D05/WLNU/WLNU*	E	1755	4G37	M	Y		10/83 ▸ 04/91	MD997619	506404	N	
1.8	*D05WLKU*	E	1755	4G37	A	Y		10/83 ▸ 04/91	MD997619	506404	N	
2.0	*D04/WLNU, D08/WLGU/WLNU*	E	1997	4G63-34, G63B0, 4G63-3J	M	Y		02/85 ▸ 04/91	MD997614	506407	N	
2.0	*D04WLKU*	E	1997	4G63-34, G63B0	A	Y		06/86 ▸ 04/91	MD997614	506407	N	
Space Wagon (91>98)													
2.0 16V	*N33/WLNS/WLNU, N43/WLNS WLNU*	E	1997	4G63-6	M	Y		06/92 ▸ 11/00	MD972050	506936	N	
2.0 16V	*N33/WLRS/WLRU, N43/WLRS WLRU*	E	1997	4G63-6	A	Y		06/92 ▸ 11/00	MD972050	506936	N	
2.4	*N34WLNU*	E	2351	4G64	M	Y		06/92 ▸ 05/96	MD972050	506936	N	
2.4	*N34WLRU*	E	2351	4G64	A	Y		06/92 ▸ 05/96	MD972050	506936	N	
2.0 TD	*N38/WLNS/WLNU*	D	1998	4D68T	M	Y		06/92 ▸ 09/92	MD972054	506857	N	
Space Wagon (98>2004)													
2.0 i	*N83/WLNF/WLNH/WLNU*	E	1997	4G63-MPI	M	Y		06/00 ▸ 01/04	MD976464	●506815	N	
2.4 GDi	*N84/WLND/WLNF/WLNG/WLNH WLNJ/WLNU, N94/WLNF/WLNG WLNH/WLNU*	E	2351	4G64-412,4G64-414,4G64-481	M	Y		07/98 ▸ 01/04	MD976464	●506815	N	
2.4 GDi	*N84/WLRD/WLRF/WLRG/WLRH WLRJ/WLRU*	E	2351	4G64-2,4G64-412,4G64-414 4G64-481	A	Y		07/98 ▸ 01/04	MD976464	●506815	N	
Starion													
2.0 i Turbo	*A183AMN*	E	1997	4G63-0W, 4G63-0R	M	Y		02/82 ▸ 05/88	MD997613	506405	N	
2.6 i Turbo	*A187AMN*	E	2555	G54B-1J	M	Y		06/86 ▸ 11/86	MD997158	506689	N	
MITSUBISHI													
L 300 (Truck) (94>2000)													
2.5 D	*P15/TYNL/TYNR/TYZA/TYZL/TYZR*	D	2477	4D56-2, 4D56-4	M	Y		06/94 ▸ 04/00	MD972001	506778	N	
L200 (K1/2/3)													
2.0	*K22TUNS, K32TCUN, K12/TCUN/TJUN TUNS*	E	1997	4G63-C	M	Y		11/86 ▸ 04/92	MD997615	506405	N	
2.4 i	*K05TUNS, K15TCUN*	E	2351	4G64	M	Y		06/90 ▸ 05/91	MD997615	506405	N	
2.6	*K33TCUN*	E	2555	G54B	M	Y		11/89 ▸ 05/95	MD975292	506689	N	
2.5 D	*K24TUNS, K14/TCUN/TJUN/TUNS/TYNS K34/TCNT/TCUN/TGJE/TJNT/TJUN/TUNS TYNS*	D	2477	4D56	M	Y		11/86 ▸	MD972001	506778	N	
L200 (K6/7)													
2.5 TD	*K64/TCEN/TEND/TJEN, K74 TCEN/TEND/TGCE/TGJE/TJEN TYND/TZND*	D	2477	4D56T-5, 4D56T+, 4D56T	M	Y		01/96 ▸	MD974999	506736	N	
2.5 TD	*K64/TJER, K74/TGJE/TJER*	D	2477	4D56T-5, 4D56T	A	Y		02/99 ▸	MD974999	506736	N	
L300 (P0/1/2/3)													
2.0	*P03/VGLZ/VLZA/WLZU/WLZX/WSNP, P13 VHLZ/VJLZ, P23/WLNX/WSNU*	E	1997	G63B, 4G63	M	Y		11/86 ▸ 04/92	MD997615	506405	N	
2.4 i	*P14VJLZ, P04/VGLZ/WHSN/WLNX, P24 VLNA/WLNX*	E	2351	4G64, G64B18	M	Y		11/86 ▸ 04/92	MD997615	506405	N	

• **New** Nouveau **Nuevo** Novo **Nuovo** Nieuw **Neu** Yeni Новый Nou

Valeo

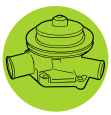

MITSUBISHI (.../...)

L300 (P0/1/2/3) (.../...)

2.5 D,2.5 TD	*P05/VGLN/VGLZ/VLZA/VLZL VLZR/WLZX, P15/VHLN/VHLZ VJLN/VJLZ/WHLN/WHLZ P45VJLN, P25/VGLN/WLNX*	D	2477	4D56, 4D56T	M	Y		11/86 ▸	MD972001	**506778**	N	

L400 (PA/PB/PD)

2.5 TD	*PA5/VGLZ/VNLZ, PD5VGLN PB5/VHLZ/VJLZ*	D	2477	4D56T-2D	M	Y		12/94 ▸	MD972001	**506778**	N	

NISSAN

100 NX Coupé (90>95)

1.6,1.6 i 16V	*GAYALUF, HAYALUF*	E	1597	GA16DS, GA16DE	M	Y		10/90 ▸ 10/94	2101088R00	**506438**	N	
1.6,1.6 i 16V	*GAYALUA, HAYALUA*	E	1597	GA16DS, GA16DE	A	Y		10/90 ▸ 10/94	2101088R00	**506438**	N	
2.0 i 16V	*GBYALWF, HBYALWF*	E	1998	SR20DEB	M	N		10/90 ▸ 10/94	210109F501	**506437**	N	

200 SX (S13) (88>94)

1.8 Turbo 16V	*RLS13FT*	E	1809	CA18DT	M	Y		09/88 ▸ 06/94	21010V5529	**506429**	N	
1.8 Turbo 16V	*RLS13AT*	E	1809	CA18DTAP, CA18DT	A	Y		09/88 ▸ 06/94	21010V5529	**506429**	N	

350Z

3.5 i V6 24V	*GAAZ33, Z33C, Z33CV 2AAZ3/3*	E	3498	VQ35DE	M	Y		07/03 ▸	21010AL528	**506924**	G	

Almera (2000>2003)

1.5 i 16V	*N16*	E	1497	QG15DE	M	Y		02/00 ▸	210109F605	**506705**	N	
1.8 i 16V	*N16*	E	1769	QG18DE	M	Y		02/00 ▸	210109F605	**506705**	N	
1.8 i 16V	*N16*	E	1769	QG18DE	A	Y		02/00 ▸	210109F605	**506705**	N	
2.2 TDi 16V,2.2 VDi 16V	*N16*	D	2184	YD22-110	M	Y		02/00 ▸	21010AD225	**506702**	N	

Almera (2003>)

1.5 i 16V		E	1497	QG15DE	M	Y		02/03 ▸	210109F605	**506705**	N	
1.8 i 16V		E	1769	QG18DE	M	Y		02/03 ▸	210109F605	**506705**	N	
1.8 i 16V		E	1769	QG18DE	A	Y		02/03 ▸	210109F605	**506705**	N	
2.2 DCi 16V		D	2184	YD22DDTI, YD22DDTI-112	M	Y		02/03 ▸	21010AD201	**506702**	N	

Almera (95>2000)

1.4 i 16V	*BAVARBF, BAVAL/DF/FF EAVARBF, EAVAL/DF/FF/QF FAVAL/BF/DY/FF/QF*	E	1392	GA14DE	M	Y		07/95 ▸	2101088R00	**506438**	N	
1.6 i 16V	*BAYAL/DF/FF/QF, EAYAL/DF FF/QF, FAYAL/DF/FF/QF*	E	1597	GA16DE	M	Y		07/95 ▸	2101088R00	**506438**	N	
1.6 i 16V	*BAYAL/DA/FA, EAYAL/DA/FA FAYAL/DA/FA*	E	1597	GA16DE	A	Y		07/95 ▸	2101088R00	**506438**	N	
2.0 i 16V	*EBYALUF*	E	1998	SR20DEB	M	N		04/96 ▸ 01/98	210109F501	**506437**	N	
2.0 i 16V	*EBYALUF*	E	1998	SR20DEB	M	Y		01/98 ▸ 01/00	2101057J03	**506737**	N	
2.0 D	*BVCAL/DF/FF, EVCAL/DF/FF, FVCAL/DF FF*	D	1974	CD20	M	Y		07/95 ▸	2101057J27	**506737**	N	

Almera Tino (2000>2003)

1.8 i 16V	*V10M*	E	1769	QG18DE	M	Y		08/00 ▸	210109F600	**506705**	N	
2.0 i 16V	*V10M*	E	1998	SR20DE	A	Y		08/00 ▸	210109F600	**506705**	N	
2.2 VDi 16V	*V10M*	D	2184	YD22DDTI-114	M	Y		08/00 ▸	210109F600	**506705**	N	
2.2 VDi 16V	*V10M*	D	2184	YD22DDTI-114	M	Y		08/00 ▸ 01/03	21010AD225	**506702**	N	

Almera Tino (2003>)

1.8 i 16V	*FV10EG*	E	1769	QG18DE	M	Y		02/03 ▸	210109F605	**506705**	N	
1.8 i 16V	*FV10EG*	E	1769	QG18DE	A	Y		02/03 ▸	210109F605	**506705**	N	
2.2 DCi 16V	*FV10TG, YV10TG*	D	2184	YD22DDTI-114, YD22DDTI	M	Y		02/03 ▸	21010AD200	**506702**	N	

Bluebird (910) (80>84)

1.6	*TLJ910D, WTLJ910, TL910/0*	E	1595	L16	M	Y		04/80 ▸ 03/84	2101021028	**506377**	N	

• **New** Nouveau **Nuevo** Novo **Nuovo** Nieuw **Neu** Yeni Новый Nou

		Type Ctr.	cc					2+3	OE	Valeo		
NISSAN (.../...)												
Bluebird (910) (80>84) (.../...)												
1.8	910/, ML910/FQ/Q, WMLJ910, MLJ91/0 0D/0S	E	1770	L18S	M	Y		04/80 ▸ 03/84	2101021028	**506377**	N	
1.8	ML910/AQ, MLJ91/0A/0D	E	1770	L18S	A	Y		04/80 ▸ 03/84	2101021028	**506377**	N	
2.0	WEL910F, NLJ91/0/0F	E	1952	L20B	M	Y		04/80 ▸ 03/84	2101021028	**506377**	N	
2.0	NLJ910A	E	1952	L20B	A	Y		04/80 ▸ 03/84	2101021028	**506377**	N	
Bluebird (T12) (86>88)												
1.6	FLT12/DF/F/FQ/SF, KLT12/DF/FQ/SF LT12D/F/FQ, LT12SFQ, LT12F//Q	E	1598	CA16S	M	Y		07/86 ▸	2101006E25	**506037**	N	
1.6	LT12A, LT12DA, FLT12/AF/DA	E	1598	CA16S	A	Y		07/86 ▸	2101006E25	**506037**	N	
1.8 Turbo,1.8 i 1.8 i Turbo	FRLT12F, KPLT12F, FPLT1 2D/2F, RLT12FE, PLT12/DF FT	E	1809	CA18ET, CA18T, CA18DE		Y		07/86 ▸	2101006E25	**506037**	N	
2.0,2.0 i	FHLT1/2A/2D, HLT12/A/AE AR/DA, KHLT1/2A/2D	E	1973	CA20S, CA20E	A	Y		07/86 ▸	2101006E25	**506037**	N	
2.0,2.0 i	FHLT1/2A/2D/2F, HLT12/AQ DF/F/FE/FR, KHLT1/2D/2F	E	1973	CA20E, CA20S		Y		07/86 ▸	2101006E25	**506037**	N	
Bluebird (T72) (88>90)												
1.6	LT72DFQ, LT72FQ, LT72SFQ, FLT72/DF FQ	E	1598	CA16S	M	Y		09/88 ▸	2101006E25	**506037**	N	
1.8 Turbo,1.8 i 1.8 i Turbo	FRLT72F, PLT72DF, RLT72FE FPLT7/2D	E	1809	CA18T, CA18DE, CA18ET	M	Y		09/88 ▸	2101006E25	**506037**	N	
2.0,2.0 i	FHLT7/2A/2D/2F/2X, HLT72 DF/FE/FQ/XF	E	1973	CA20E, CA20S	M	Y		12/85 ▸	2101006E25	**506037**	N	
2.0,2.0 i	FHLT7/2A/2X, HLT72/AE/AQ XA	E	1973	CA20S, CA20E	A	Y		09/88 ▸	2101006E25	**506037**	N	
Bluebird (U11) (84>86)												
1.8	MU11HAU	E	1809	CA18N	A	Y		06/86 ▸ 1988	2101006E25	**506037**	N	
Cedric (Y30)												
2.0	NLY30F	E	1973	CA20S	M	Y		10/83 ▸ 06/88	21010V5525	**506429**	N	
2.3 D	RLY30/F/SC/SF	D	2289	SD23	M	Y		10/83 ▸ 09/84	2101037528	**506779**	N	
Cherry (E10) (71>76)												
1.0	LE10RTD, KLE10/TD, LE10TDL, LE10S RT/TD, WLE10/RT/SR	E	988	A10	M	Y		04/71 ▸ 04/76	21010H5025	**506091**	N	
1.2	KPLE1/0T, PLE10/RT/TD	E	1171	A12	M	Y		10/72 ▸ 04/76	21010H5025	**506091**	N	
Cherry (F10) (75>79)												
1.0	BF10R/Y, BF10U, BF10Y, BF10S/RU/RY U, WBF10/SU/Y	E	988	A10	M	Y		02/75 ▸ 1979	21010H5025	**506091**	N	
1.2	F10U, F10Y, KF10U, KF10Y, F10RY	E	1171	A12	M	Y		02/75 ▸ 1979	21010H5025	**506091**	N	
1.2	F10ARY, F10AY, KF10A, F10A	E	1171	A12	A	Y		02/75 ▸ 1979	21010H5025	**506091**	N	
Cherry (N10) (79>83)												
1.0	KNLN10Q, TBLN10R, VBLN10Q, BLN10 LQ/Q/RQ/RS	E	988	A10	M	Y		10/78 ▸ 07/83	21010M6626	**506091**	N	
1.2	LN10, LN10HQ, KLN10/F/HF, LN10Q LN10L//FQ/HF/HQ/Q, TLN10RS, LN10R HQ/Q	E	1171	A12	M	Y		10/78 ▸ 07/83	21010M6626	**506091**	N	
1.2	KLN10/A/HA, LN10A//Q, LN10L/A/AQ/HA	E	1171	A12	A	Y		10/78 ▸ 07/83	21010M6626	**506091**	N	
1.4	KHLN10H, HLN10/LH/RH	E	1397	A14	M	Y		08/80 ▸ 07/83	21010M6626	**506091**	N	
1.4	HLN10LH, KHLN10H	E	1397	A14	A	Y		08/80 ▸ 07/83	21010M6626	**506091**	N	
Cherry (N12) (82>86)												
1.0	RBN12, RBLN1/2L/2S/2Y	E	988	E10	M	Y		04/82 ▸ 12/86	2101050A28	**506023**	N	
1.3	RPN12, RPLN1/2H/2L/2Y	E	1270	E13	M	Y		04/82 ▸ 12/86	2101050A28	**506023**	N	
1.3	RPLN1/2H/2L/2Y	E	1270	E13	A	Y		04/82 ▸ 12/86	2101050A28	**506023**	N	
1.5,1.5 Turbo	ORHN1/2, RHLN1/2H/2L RHN12/L	E	1488	E15, E15T	M	Y		04/82 ▸ 12/86	2101050A28	**506023**	N	
1.5	RHLN1/2H/2L	E	1488	E15	A	Y		04/82 ▸ 12/86	2101050A28	**506023**	N	

• **New** Nouveau **Nuevo** Novo **Nuovo** Nieuw **Neu** Yeni Новый Nou

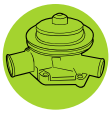

NISSAN (.../...)

Cherry (N12) (82>86) (.../...)

1.6	MLN12/, RMLN1/2H/2L	E	1597	E16	M	Y		06/85 ▸ 02/87	2101050A28	**506023**	N	

Maxima (J30)

3.0	HLJ30GF	E	2960	VG30E	M	Y		12/88 ▸ 09/94	2101016E02	**506487**	N	
3.0	HLJ30GA	E	2960	VG30E	A	Y		12/88 ▸ 09/94	2101016E02	**506487**	N	

Micra (2005>)

1.2 i 16V	EBAK12, FBAK12	E	1240	CR12DE	M	N		06/05 ▸	21010BX000	**506717**	N	
1.2 i 16V		E	1240	CR12DE	A	N		06/05 ▸	21010BX000	**506717**	N	
1.4 i 16V	2CAK12	E	1386	CR14DE	M	N		06/05 ▸	21010BX000	**506717**	N	
1.4 i 16V		E	1386	CR14DE	A	N		06/05 ▸	21010BX000	**506717**	N	

Micra (K10) (82>92)

1.0	LK10F//Q, LK10Q, LK10L/FQ/Q/S/SQ LK10S//Q	E	988	MA10S, MA10	M	Y		11/88 ▸ 11/92	2101019B25	**506622**	CR	
1.0	LK10A//Q, LK10L/A/AQ	E	988	MA10S, MA10	A	Y		11/88 ▸ 11/92	2101019B25	**506622**	CR	
1.2	51ZHL/K1, HLK10/FQ/GF/LF/LG/LS/SF	E	1235	MA12	M	Y		11/88 ▸ 11/92	2101019B25	**506622**	CR	
1.2	HLK10/AQ/AQ/GA/LA/LG	E	1235	MA12	A	Y		11/88 ▸ 11/92	2101019B25	**506622**	CR	

Micra (K11) (2000>2002)

1.0 i 16V	K11	E	998	CG10DE	M	Y		07/00 ▸ 12/02	2101041B02	**506368**	N	
1.0 i 16V	K11	E	998	CG10DE	A	Y		07/00 ▸ 12/02	2101041B02	**506368**	N	
1.4 i 16V	K11	E	1348	CGA3	M	Y		07/00 ▸ 12/02	2101041B02	**506368**	N	
1.4 i 16V	K11	E	1348	CGA3	A	Y		07/00 ▸ 12/02	2101041B02	**506368**	N	
1.5 D	K11	D	1527	TD15	M	Y		07/00 ▸ 12/02	210106F906	**506290**	CR	

Micra (K11) (92>2000)

1.0 i 16V	EAEAL/BF/DF/FF, FREAL/BF DF/FF	E	998	CG10DE	M	Y		08/92 ▸ 08/00	2101099B00	**506368**	N	
1.0 i 16V	EAEALFZ, FAEALFZ	E	998	CG10DE	A	Y		08/92 ▸ 06/00	2101099B00	**506368**	N	
1.3 i	EANAL/DF/FF/TF, FANAL/DF/FF	E	1275	CG13DE	M	Y		08/92 ▸ 06/00	2101099B00	**506368**	N	
1.3 i	EANAL/DZ/FZ, FANAL/DZ/FZ	E	1275	CG13DE	A	Y		08/92 ▸ 06/00	2101099B00	**506368**	N	
1.5 D	ECAK11U, FCAK11U	D	1527	TD15	M	Y		04/98 ▸ 10/99	210106F907	**506290**	CR	

Micra (K12) (2003>2005)

1.0 i 16V	EAAK12, FAAK12	E	998	CG10DE	M	N		01/03 ▸ 05/05	21010BX000	**506717**	N	
1.2 i 16V	EBAK12, FBAK12	E	1240	CG12DE	M	N		01/03 ▸ 05/05	21010BX000	**506717**	N	
1.2 i 16V	EBAK12, FBAK12	E	1240	CG12DE	A	N		01/03 ▸ 05/05	21010BX000	**506717**	N	
1.4 i 16V	ECAK12, FCAK12	E	1386	CGA3DE	M	N		01/03 ▸ 05/05	21010BX000	**506717**	N	
1.4 i 16V	ECAK12, FCAK12	E	1386	CGA3DE	A	N		01/03 ▸ 05/05	21010BX000	**506717**	N	
1.5 dCi	EDAK12, FDAK12	D	1461	K9K.7	M	Y		01/03 ▸ 05/05	21010BN700	**506674**	SS	

Micra (K12) (2005>)

1.5 dCi		D	1461	K9K.7	M	Y		09/07 ▸	2101000Q0E	**506863**	SS	

Murano (2008>)

3.5 i V6 24V	TLJNL-W, TLJNR-W	E	3498	VQ35DE	A	Y		06/08 ▸	21010AL528	**506924**	G	

Navara

2.5 TDi	D40M	D	2488	YD25DDTI-144,YD25DDTI-174	M	Y		05/05 ▸	21010EB300	**506927**	N	
2.5 TDi	D40CNN	D	2488	YD25DDTI-174	A	Y		05/05 ▸	21010EB300	**506927**	N	

Note

1.4 i 16V		E	1386	CR14DE	M	N		09/05 ▸	21010BX000	**506717**	N	
1.5 dCi		D	1461	K9K.7	M	Y		09/05 ▸	2101000QAS	**506674**	SS	

Note FL (2008>)

1.5 dCi 106,1.5 dCi 68 1.5 dCi 86	FTKAL/-F/-Y, FTKAR/-F/-Y	D	1461	K9K.7,K9K.7/F	M	Y		01/08 ▸	2101000Q0E	**506863**	SS	

Pathfinder (2005>)

4.0 C-VTC 24V	R51M	E	3954	VQ40DE	A	Y		06/05 ▸ 09/05	210107Y025	**506924**	G	
4.0 C-VTC 24V	R51M	E	3954	VQ40DE	A	Y		09/05 ▸ 09/06	210107Y026	**506924**	G	

• **New** Nouveau **Nuevo** Novo **Nuovo** Nieuw **Neu** Yeni Новый Nou

		Type Ctr.		cc						OE	Valeo	
NISSAN (.../...)												
Pathfinder (2005>) (.../...)												
2.5 dCi	*R51M*	D		2488	YD25	M	Y		02/05 ▸	21010EB300	**506927**	N
2.5 dCi	*R51M*	D		2488	YD25	A	Y		02/05 ▸	21010EB300	**506927**	N
Pathfinder (D21)												
2.4	*WNLYD21*	E		2389	Z24	M	Y		08/86 ▸ 02/98	2101021029	**506377**	N
Patrol (2004>)												
3.0 TDi		D		2953	ZD30DDTI-E4	M	Y		08/04 ▸	210102W227	**506868**	vvv
3.0 TDi		D		2953	ZD30DDTI-E4	A	Y		08/04 ▸	210102W227	**506868**	vvv
Patrol 160 (80>85)												
4.0	*KL160Q*	E		3956	P40	M	Y		06/80 ▸ 07/83	21010C6525	**506779**	N
3.3 D,3.3 TD	*KRL160Q, TRL160L, URLG160 WRLG160, CRLG1/60*	D		3246	SD33, SD33T	M	Y		07/80 ▸ 1988	2101061528	**506779**	N
Patrol 160 (Espana) (79>85)												
2.7 D	*APLG1/60, KPL16/0Q/0X*	D		2710	MD27	M	Y		11/79 ▸ 01/85	999108	**506360**	N
Patrol 260 (84>)												
2.8 D,2.8 TD	*JPL260S, KPL260F, PPL260L SPL260S, APLG2/60*	D		2820	A428-II, A428T	M	Y		03/89 ▸ 10/91	741001122	**506358**	N
2.8 D,2.8 TD	*CYLG260, JYL260F, KYL260F PYL260G, TYL260L WYLG260, AYLG2/60*	D		2826	RD28T, RD28	M	Y		03/89 ▸	2101081T25	**506394**	N
3.3 D,3.3 TD	*CRLG260, GRL260X, JRL260X KRL260F, PRL260L TRL260L, WRLG260, ARLG2 60*	D		3246	SD33T, SD33	M	Y		11/84 ▸ 02/89	2101061529	**506779**	N
Patrol GR (Y60) (88>97)												
2.8 TD	*AYLGY/60, VYLGY60 WYLGY60, KYLY6/0F/0J/0L 0P/0Y*	D		2826	RD28T	M	Y		09/88 ▸	2101081T25	**506394**	N
Patrol GR (Y61) (97>)												
3.0 TDi	*Y61*	D		2953	ZD30DDTI	M	Y		02/00 ▸ 07/04	210102W226	**506868**	vvv
Prairie (M10) (82>88)												
1.5	*BLM10/HF/KD/KH/LD*	E		1488	E15S	M	Y		09/82 ▸ 09/88	2101050A28	**506023**	N
1.8	*PLM10/HF/TH*	E		1809	CA18, CA18S	M	Y		07/86 ▸ 09/88	2101006E25	**506037**	N
1.8	*PLM10/HA/TH*	E		1809	CA18S, CA18	A	Y		07/86 ▸ 09/88	2101006E25	**506037**	N
2.0,2.0 i	*HLNM10H*	E		1973	CA20E, CA20S	M	Y		01/86 ▸ 09/88	2101006E25	**506037**	N
Prairie (M11) (88>95)												
2.0,2.0 i	*LM11Q, LM11J/EQ/Q, LM11T JE/JQ/Q, LNM11/JE/JQ/TJ*	E		1973	CA20S, CA20E	M	Y		10/88 ▸ 12/88	2101006E25	**506037**	N
2.0,2.0 i	*LM11A/Q, LM11J/AE/AQ LM11T/AQ/JA, LNM11/JA/TJ*	E		1973	CA20E, CA20S	A	Y		10/88 ▸ 12/88	2101006E25	**506037**	N
2.4 i	*HLNM11T, HLM11/JE/TJ*	E		2389	KA24E	M	Y		04/92 ▸ 07/94	2101030R05	**506682**	N
2.4 i	*HLM11/JA/TJ*	E		2389	KA24E	A	Y		04/92 ▸ 07/94	2101030R05	**506682**	N
Primera (P10) (90>96)												
1.6,1.6 i 16V	*BAAP10, 0AYAL/FF, BAYAL BF/DF/FF, BBYALFF, BAYAR BF/DF, FAYAL/BF/DF/FF FAYAR/BF/DF, TAYLDFW TAYAL/DF/FF*	E		1597	GA16DS, GA16DEC, GA16DE	M	Y		02/90 ▸ 05/96	2101088R00	**506438**	N
2.0,2.0 16V,2.0 e 16V 2.0 i,2.0 i 16V	*BBYAL/DF/FF/GF/UF/VF BBYAR/DF/GE/UF, BBYNL/FF UF, FBYAL/DF/FF/GF/VF FBYNLFF, FBYAR/DF/FF/GE UF, TBYAL/DF/FF/GF*	E		1998	SR20DI, SR20DE	M	N		02/90 ▸ 01/98	210109F501	**506437**	N

• **New** Nouveau **Nuevo** Novo **Nuovo** Nieuw **Neu** Yeni Новый Nou

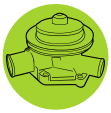

Type Ctr.	cc					OE	Valeo		
NISSAN (.../...)									
Serena (C23M) (.../...)									
2.0 i EBYALGF, ABYAL/GF/HF	E	1998	SR20DEA	M	N		07/92 ▸ 10/93	2101070J00	**506437**	N	
2.0 D AVEAL/HF, AVEVL/EF/GF/HF, EVEVL/EF GF	D	1952	LD20	M	Y		07/92 ▸ 09/94	210101C505	**506357**	N	
2.3 D AVFVLEF, AVFAL/HF, EVFVL/EF/GF	D	2283	LD23	M	Y		09/94 ▸	210109C600	**506534**	N	
Silvia (S110)									
1.8 i HLS110J, KHLS110	E	1770	L18E	M	Y		02/78 ▸ 09/83	2101021027	**506377**	N	
1.8 i HLS110J, KHLS110	E	1770	L18E	A	Y		02/78 ▸ 09/83	2101021027	**506377**	N	
Silvia (S12)									
1.8 Turbo RLS12/AT/SF	E	1809	CA18ET	M	Y		10/83 ▸ 08/88	21010V5525	**506429**	N	
1.8 Turbo RLS12AT	E	1809	CA18ET	A	Y		10/83 ▸ 08/88	21010V5525	**506429**	N	
2.0 PLJS12F	E	1973	CA20E	M	Y		07/86 ▸ 08/88	21010V5525	**506429**	N	
2.0 PLJS12A, RPLJS12	E	1973	CA20E	A	Y		10/83 ▸ 08/88	21010V5525	**506429**	N	
Sunny (B12) (86>90)									
1.5 KHLB12H, WHLB12H	E	1488	E15S	M	Y		06/86 ▸ 06/87	2101050A28	**506023**	N	
1.6,1.6 i KGLB1/2H/2J, WGLNB12 WGLB1/2F/2H/2J	E	1597	GA16I, GA16S	M	Y		10/88 ▸ 05/90	2101077A00	**506436**	N	
1.6,1.6 i KGLB1/2H/2J, WGLB1/2H/2J	E	1597	GA16S, GA16I	A	Y		10/88 ▸ 05/90	2101077A00	**506436**	N	
1.6,1.6 i KPLB1/2H/2J, WPLNB12 WPLB1/2F/2H/2J	E	1598	E16S, E16I	M	Y		06/86 ▸ 09/88	2101050A28	**506023**	N	
1.6 16V KELB12H	E	1598	CA16D	M	Y		06/86 ▸ 09/88	2101006E25	**506037**	N	
1.6,1.6 i KPLB1/2H/2J, WPLB1/2H/2J	E	1598	E16I, E16S	A	Y		06/86 ▸ 09/88	2101050A28	**506023**	N	
1.8 i 16V KULB12J	E	1809	CA18D	M	Y		10/88 ▸ 05/90	2101006E25	**506037**	N	
Sunny (N13) (86>90)									
1.0 RMLN13L, FMLN1/3D/3L	E	988	E10S	M	Y		06/86 ▸ 10/88	2101050A28	**506023**	N	
1.3 BLN13/DF/HF/LQ, FBLN1/3D/3H, RBLN1 3D/3F/3H/3L	E	1270	E13S	M	Y		06/86 ▸ 1990	2101050A28	**506023**	N	
1.3 BLN13/DA/HA, FBLN1/3D/3H, RBLN1/3D 3H	E	1270	E13S	A	Y		06/86 ▸ 1990	2101050A28	**506023**	N	
1.4 FULN1/3D/3H, RULN1/3D/3H/3L, ULN13 DF/HF/LF	E	1392	GA14S	M	Y		10/88 ▸ 1990	2101077A00	**506436**	N	
1.4 FULN1/3H, ULN13HA, RULN1/3D/3H	E	1392	GA14S	A	Y		10/88 ▸ 1990	2101077A00	**506436**	N	
1.5 HLN13HF, FHLN1/3H, RHLN1/3D/3H	E	1488	E15S	M	Y		06/86 ▸ 10/88	2101050A28	**506023**	N	
1.5 HLN13HA, RHLN13H, FHLN1/3H	E	1488	E15S	A	Y		06/86 ▸ 10/88	2101050A28	**506023**	N	
1.6,1.6 i FGLN1/3D/3H/3W, GLNN13H GLN13/DF/HF/WF, RGLN1/3D 3H	E	1597	GA16S, GA16I	M	Y		10/88 ▸ 1990	2101077A00	**506436**	N	
1.6,1.6 i FGLN1/3H/3W, RGLN13H GLN13/HA/WA	E	1597	GA16I, GA16S	A	Y		10/88 ▸ 1990	2101077A00	**506436**	N	
1.6,1.6 i FPLN1/3D/3H/3W, PLNN13H RHLN13H, RPLN13H, PLN13 DF/HF/WF	E	1598	E16S, E16I	M	Y		06/86 ▸ 1990	2101050A28	**506023**	N	
1.6 16V ELN13WF, RELN13S	E	1598	CA16D	M	Y		02/87 ▸ 10/88	2101006E25	**506037**	N	
1.6,1.6 i FPLN1/3H, RPLN13H, PLN13 HA/WA	E	1598	E16S, E16I	A	Y		06/86 ▸ 1990	2101050A28	**506023**	N	
1.8 16V FCLN13S, RCLN13S	E	1809	CA18D	M	Y		10/88 ▸ 1990	2101006E25	**506037**	N	
1.7 D FSLN1/3D/3H, RSLN1/3D/3H, SLN13/DF HF	D	1681	CD17	M	Y		06/86 ▸ 1990	2101050A26	**506023**	N	
1.7 D SLN13HA	D	1681	CD17	A	Y		06/86 ▸ 10/88	2101050A26	**506023**	N	
Sunny (N14) (90>95)									
1.4,1.4 i 16V BAVAL/BF/DF/FF, EAVAL/BD BF/DF/FF, VAVALDF, FAVAL DF/FF	E	1392	GA14DS, GA14DE	M	Y		10/90 ▸	2101088R00	**506438**	N	
1.4,1.4 i 16V EAVALDA, BAVAL/DA/FA VAVALDA, FAVAL/DA/FA	E	1392	GA14DS, GA14DE	A	Y		10/90 ▸	2101088R00	**506438**	N	
1.6,1.6 i BAYNLFF, EAYALFF, FAYALFF BAYAL/DF/FF	E	1597	GA16DS, GA16DEE	M	Y		10/90 ▸	2101088R00	**506438**	N	
1.6,1.6 i EAYALFA, FAYALFA, BAYAL FA	E	1597	GA16DS, GA16DEE	A	Y		10/90 ▸	2101088R00	**506438**	N	

• **New** Nouveau **Nuevo** Novo **Nuovo** Nieuw **Neu** Yeni Новый Nou

Valeo

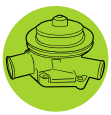

Type Ctr.		cc						OE	Valeo		
NISSAN (.../...)											
Sunny (N14) (90>95) (.../...)											
2.0 16V *EBYAL/UF, FBYAL/UF/UN*	E	1998	SR20DEB	M	N		10/90 ▸	210109F501	**506437**	N	
2.0 D *BVCAL/DF/FF, EVCAL/DF/FF, FVCAL/DF FF*	D	1974	CD20	M	Y		10/90 ▸ 05/95	2101057J25	**506737**	N	
Sunny (Y10) (90>96)											
1.6,1.6 i 16V *TAYNLFF, WAYALBF, TAYAL DF/FF*	E	1597	GA16DE, GA16DS	M	Y		10/90 ▸ 12/96	2101088R00	**506438**	N	
2.0 D *TVCAL/DF/FF*	D	1974	CD20	M	Y		10/90 ▸ 02/96	2101057J25	**506737**	N	
Terrano (WD21) (87>93)											
3.0 V6 *WHYD2/1/1D*	E	2960	VG30	M	Y		01/90 ▸ 02/93	2101012G26	**506606**	N	
3.0 V6 *WHYD21A*	E	2960	VG30	A	Y		01/90 ▸ 02/93	2101012G26	**506606**	N	
2.7 TD *WBLYF, WBLYJFT, WBYD21D WBLYD/21*	D	2663	TD27	M	Y		08/87 ▸ 02/93	2101080G01	**506733**	V+V	
Terrano II (R20) (93>2001)											
2.4 i *KBFNL/QF/UF/VF, TBFUL/QF/UF/VF*	E	2389	KA24E-1	M	Y		03/93 ▸	2101086G00	**506836**	N	
2.7 TD *JVPNL/QF, KVPNL/QF/UF/VF TVPUL/QF/UF/VF*	D	2663	TD27T	M	Y		03/93 ▸	210107F400	**506733**	V+V	
2.7 TDi	D	2664	TD27TI	M	Y		05/96 ▸	210107F400	**506733**	V+V	
2.7 TDi	D	2664	TD27TI	A	Y		07/98 ▸	210107F400	**506733**	V+V	
Terrano III (2002>)											
2.7 Di	D	2664	TD27TI	M	Y		02/04 ▸	210107F400	**506733**	V+V	
2.7 Di	D	2664	TD27TI	A	Y		02/04 ▸	210107F400	**506733**	V+V	
Tiida (C11X) (2007>)											
1.8 i 16V *BDSAL-Y, FDSAL-Y*	E	1797	MR18DE	M	Y		03/07 ▸	B1010ET00A	▲**506965**	SS	
1.5 dCi *BTKAR-Y, FTKAL-Y, FTKAR-Y BTKAL/-Y*	D	1461	K9K.7.64	M	Y		03/07 ▸	2101000QAS	**506674**	SS	
X-Trail (2001>2003)											
2.0 i 16V	E	1998	QR20DE	M	Y		06/01 ▸ 09/03	210106N225	**506916**	SS	
2.0 i 16V	E	1998	QR20DE	A	Y		06/01 ▸ 09/03	210106N225	**506916**	SS	
2.2 Di	D	2184	YD22ETI-114	M	Y		06/01 ▸	21010AD225	**506702**	N	
X-Trail (2004>2007)											
2.0 16V	E	1998	QR20DE	M	Y		09/03 ▸ 03/07	210106N226	**506916**	SS	
2.5 i 16V	E	2488	QR25DE	M	Y		09/03 ▸ 03/07	210106N226	**506916**	SS	
2.5 i 16V	E	2488	QR25DE	A	Y		09/03 ▸ 03/07	210106N226	**506916**	SS	
X-Trail (2007>)											
2.5 16V	E	2488	QR25DE	M	Y		03/07 ▸	210106N226	**506916**	SS	
2.5 16V	E	2488	QR25DE	A	Y		03/07 ▸	210106N226	**506916**	SS	
2.0 dCi 16V	D	1995	M9R/F	M	Y		03/07 ▸	2101000Q0C	**506902**	N	
2.0 dCi 16V	D	1995	M9R/F	A	Y		03/07 ▸	2101000Q0C	**506902**	N	
X-Trail (T31) (JPN)											
2.0 16V	E	1997	MR20DE	M	Y		03/07 ▸ 07/10	B1010EN20B	▲**506965**	SS	
2.0 16V	E	1997	MR20DE	A	Y		03/07 ▸ 07/10	B1010EN20B	▲**506965**	SS	
NISSAN											
Cabstar (2006>)											
2.5 td *UVL2L/JF/JG/JY, UVL2R/JF JG/JY, UVL3L/EG/EY/JF/JG JY, UVL3R/EG/EY/JF/JG/JY UVL4L/EG/EY/JF/JG/JY UVL4R/EG/EY/JF/JG/JY*	D	2488	YD25DDTI (LO),YD25DDTI (MI)	M	Y		09/06 ▸	21010EB300	**506927**	N	
D21 Pick-up											
2.0 *FLGD21S, KFLGD21, PLGD21H, UFLGD21 FLD21/SR/XR*	E	1952	Z20	M	Y		09/85 ▸ 05/94	2101021085	**506377**	N	

• **New** Nouveau **Nuevo** Novo **Nuovo** Nieuw **Neu** Yeni Новый Nou

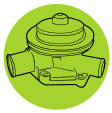

		Type Ctr.		cc					2 3	OE	Valeo		
NISSAN (.../...)													
D21 Pick-up (.../...)													
2.4,2.4 i	*KNLMD21, NLD21R, NLG21R NLMD21S, NLYD21S UNLGD21, UNLMD21, KLNGD 21*	E	2389	Z24, Z24E	M	Y		09/85 ▸ 04/92	2101021029	**506377**	N	
2.4 i	*KSLMD21, USLMD21, KSLGD/21*	E	2389	KA24E	M	Y		04/92 ▸ 02/98	2101040F25	**506836**	N	
2.4	*KNLGD21, NLD21KR*	E	2389	Z24	A	Y		09/85 ▸ 04/92	2101021029	**506377**	N	
2.5 D	*KRLMD21, RLGD21S, RLMD21S, KRLGD/21*	D	2494	TD25-80	M	Y		10/87 ▸ 02/98	2101043G28	**506782**	V+V	
Interstar													
1.9 dCi	*FDAPD5*	D	1870	F9Q.7.72	M	Y		09/02 ▸ 11/03	2101000QAC	●**506698**	SS	
2.2 dCi	*F3AJD5, FDBNH5*	D	2188	G9T.7.22	M	Y		09/02 ▸	2101000QAD	**506709**	N	
2.2 dCi	*FDBNH5*	D	2188	G9T.7.22	M	Y		09/02 ▸ 11/03	2101000QAC	●**506698**	SS	
2.5 dCi	*FDAUD5, FDBUH5*	D	2464	G9U.7.20	M	Y		09/02 ▸ 11/03	2101000QAC	●**506698**	SS	
2.5 dCi	*F3CVE5, F3CVH5, F3CVJ5 F3CVL5, F3CVM5, FDAUD5 FDBUH5, F3CVD/5*	D	2464	G9U.7.20, G9U.7.50	M	Y		09/02 ▸ 09/06	2101000QAD	**506709**	N	
King Cab (D22)													
2.5 TDi	*D22*	D	2488	YD25DDTI	M	Y		02/02 ▸ 01/08	21010VK525	**506927**	N	
Kubistar													
1.2 E 16V	*F10WAF*	E	1149	D4F.712	M	Y		09/03 ▸	2101000QAL	**506780**	SS	
1.4 E		E	1390	K7J.7.00	M	N		09/03 ▸ 01/04	2101000QAJ	**506573**	CR	
1.4 E		E	1390	K7J.7.01	A	N		09/03 ▸ 01/04	2101000QAJ	**506573**	CR	
1.6 E 16V		E	1598	K4M.7.52	M	Y	20 teeth	01/04 ▸	2101000QAA	**506655**	CR	
1.6 E 16V		E	1598	K4M.7.52	A	Y	20 teeth	01/04 ▸	2101000QAA	**506655**	CR	
1.5 dCi		D	1461	K9K.7, K9K.7.02	M	Y		09/03 ▸ 04/04	2101000QAT	**506674**	SS	
NV200													
1.5 dCi 85		D	1461	K9K	M	Y		08/09 ▸	2101000Q0E	**506863**	SS	
Pick-up (720)													
1.8	*KPLY720, KPL72/0/0T, PL720/T/TR PLGY720, PLY720T, PLG72/0H/0T UPLY720, UPL72/0/0T*	E	1770	L18	M	Y		09/79 ▸ 08/85	2101021027	**506377**	N	
2.2	*MLGY720, MLY720T, UMLY720, KMLY7/20*	E	2118	Z22	M	Y		04/83 ▸ 08/85	2101021027	**506377**	N	
Primastar (2002>2006)													
1.9 dCi		D	1870	F9Q.7.60	M	Y		09/02 ▸ 09/06	2101000QAC	●**506698**	SS	
2.5 dCi		D	2464	G9U.7.30	M	Y		09/02 ▸	2101000QAC	●**506698**	SS	
2.5 dCi		D	2464	G9U.7.30	M	Y		09/02 ▸ 09/06	2101000QAD	**506709**	N	
Primastar (2006>)													
2.0 dCi	*X83-A/TY/TZ, X83-CTY X83-DTY, X83-B/TY/TZ X83-GTY, X83-JTY, X83-E TY/TZ, X83-N/TT/TZ*	D	1995	M9R.7.80	M	Y		09/06 ▸	2101000Q0C	**506902**	N	
Trade													
2.0 D	*AF14373, AF15373, AF16373, AS15373 AS16373, AC123/73*	D	1952	LD20-II	M	Y		04/93 ▸	21010G5586	**506357**	N	
2.8 D	*KE1111, KF1107*	D	2820	A428-II	M	Y		12/86 ▸ 03/93	741001052	**506358**	N	
2.8 D	*BF16373, BS15373, BS16373, BS25373 BF153/73*	D	2820	A428-II	M	Y		04/93 ▸ 06/94	741001134	**506360**	N	
3.0 D	*VC123/73/75, VC223/73/75, VD22373 VD23275, VC323/73/75, VD332/73/75*	D	2953	BD30	M	Y		04/93 ▸	741001052	**506358**	N	
3.0 D	*VF15373, VD23373, VM25373, VD33273 VS15373, VS16373, VC12373, VC22373 VC32273, VF16373, VF25373, VD33373 VC32373, VS25373, VD22373*	D	2953	BD30-II,BD30-TI	M	Y		06/94 ▸	2101069T02	●**506731**	N	
Vanette (C120 Jap) (81>86)													
1.5	*KHLC120, VHLC120*	E	1487	A15	M	Y		06/81 ▸ 09/86	21010H7227	**506416**	N	

• **New** Nouveau **Nuevo** Novo **Nuovo** Nieuw **Neu** Yeni Новый Nou

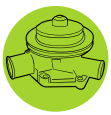

			CC						OE	Valeo		
NISSAN (.../...)												
Vanette (C120 Sp) (86>)												
1.5 *BHLC120, BHLGC12*	E	1487	A15	M	Y		04/87 ▸	21010M6626	**506091**	N	
Vanette (C220 Sp) (86>94)												
1.5 *BHLC220, BHLGC22*	E	1487	A15	M	Y		04/87 ▸ 06/94	21010H7227	**506416**	N	
2.0 D *BELC220, BELGC22*	D	1952	LD20-II	M	Y		04/87 ▸ 11/94	21010G5526	**506357**	N	
Vanette (GC22 Jap) (86>93)												
1.5 *APLC2/2K, EPLC22K, BPLC2/2B/2K*	E	1487	A15S	M	Y		09/86 ▸ 03/93	21010H7227	**506416**	N	
2.0 D *AULC2/2K, EULC22K, WULC22B, BULC2 2B/2K*	D	1952	LD20	M	Y		09/86 ▸ 03/93	21010G5586	**506357**	N	
Vanette Cargo (C23M) (95>)												
1.6 i *MAYVLDF*	E	1597	GA16DEE	M	Y		07/92 ▸	2101071J00	**506438**	N	
2.0 D *MVEVLDF*	D	1952	LD20	M	Y		07/92 ▸ 08/94	210101C505	**506357**	N	
2.3 D *MAVFLDF, MVFVLDF*	D	2283	LD23	M	Y		09/94 ▸	210109C600	**506534**	N	
OPEL												
Agila (2000>2007)												
1.0 i 12V 19t85745 ▸	E	973	Z10XE	M	Y		03/00 ▸	6334025	**506601**	N	
1.0 i Twinport 12V *HF68CG*	E	998	Z10XEP	M	Y		08/03 ▸	6334025	**506601**	N	
1.0 i Twinport 12V *HF68CG*	E	998	Z10XEP	M	Y		08/03 ▸ 12/07	1334145	**506838**	N	
1.2 i 16V *HL68EG* 19T85745 ▸	E	1199	Z12XE	M	Y		03/00 ▸	6334025	**506601**	N	
1.2 i Twinport 16V	E	1229	Z12XEP	M	Y		09/04 ▸	6334025	**506601**	N	
1.2 i Twinport 16V	E	1229	Z12XEP	M	Y		09/04 ▸ 12/07	1334145	**506838**	N	
1.3 CDTi 16V *HF68FA*	D	1248	Z13DT	M	Y		08/03 ▸	6334001	**506716**	vvv	
Agila (2007>)												
1.3 CDTi 16V	D	1248	Z13DTJ	M	Y		12/07 ▸	1334711	•**506983**	V	
Antara												
2.4 i 16V	E	2450	Z24XE	M	Y		10/06 ▸	1334139	**506856**	CR	
2.4 i 16V	E	2450	Z24XE	A	Y		10/06 ▸	1334139	**506856**	CR	
Ascona B (75>81)												
1.3,1.3 S	E	1297	13S, 13N	M	Y		03/79 ▸ 07/81	1334023	**506006**	CR	
1.6,1.6 S	E	1584	16N, 16S-CVH	M	Y		08/75 ▸ 07/81	1334081	**506048**	N	
1.6,1.6 S	E	1584	16N, 16S-CVH	A	Y		08/75 ▸ 07/81	1334081	**506048**	N	
1.9	E	1897	19N	M	Y		08/75 ▸ 07/81	1334081	**506048**	N	
2.0,2.0 E	E	1979	20E, 20S	M	Y		08/78 ▸ 07/81	1334081	**506048**	N	
2.0 D ▸ 102685	D	1998	20D	M	Y		08/78 ▸	1334087	**506346**	V	
Ascona C (81>88)												
1300,1300 S *J94/11/68/69, J98/11/68 69, JC9/481/484/486/487 488/489/588/881/884/886 887/889/8A8*	E	1297	13N, 13S	M	Y		08/81 ▸ 08/88	1334023	**506006**	CR	
1300,1300 S *J95/11/68/69, JC9/581/584 586/587/589*	E	1297	13N, 13S	A	Y		08/81 ▸ 08/88	1334023	**506006**	CR	
1600 *JC*	E	1584	16N	M	Y		▸ 08/83	1334008	**506005**	CR	
1600 *JC*	E	1584	16N	M	Y		08/81 ▸	1334013	**506003**	CR	
1600,1600 S *JC4/381/384/386/481/484 486/487/488/4A8/4AR/8A8 JCU467, JCC/438/488, JU4 11/68/69/GT1/GT8/GT9, JU8 11/68/69*	E	1598	16SH	M	Y			1334008	**506005**	CR	

• **New** Nouveau **Nuevo** Novo **Nuovo** Nieuw **Neu** Yeni Новый Nou

Type Ctr.	cc					2-3	OE	Valeo		
OPEL (.../...)										
Ascona C (81>88) (.../...)										
1600,1600 S *JC4/381/384/386/481/484 486/487/488/4A8/4AR/8A8 JCU467, JCC/438/488, JU4 11/68/69/GT1/GT8/GT9, JU8 11/68/69*	E	1598	16SH	M	Y		08/81 ▸	1334013	**506003**	CR
1.6 S,1600,1600 i *JC*	E	1598	C16NZ, 16SV, E16NZ	M	Y		08/86 ▸ 08/88	1334024	**506030**	CR
1600,1600 S *JCC458, JCU567, JC4/581 584/586/587/588/589/5R8 JU5/11/68/69/GT1/GT8/GT9*	E	1598	16SH	A	Y		▸ 08/88	1334008	**506005**	CR
1600,1600 S *JCC458, JCU567, JC4/581 584/586/587/588/589/5R8 JU5/11/68/69/GT1/GT8/GT9*	E	1598	16SH	A	Y		08/81 ▸	1334013	**506003**	CR
1600 i *JC*	E	1598	E16NZ	A	Y		09/87 ▸ 08/88	1334024	**506030**	CR
1800 E,1800 i *JCCW38, JC/, JCW/381/384 386/4A8/4AC/4C8*	E	1796	S18NV, 18E, E18NV	M	Y		▸ 08/88	1334008	**506005**	CR
1800 E,1800 i *JCC/W38, JCW/3/381/384 386/4A8/4AC/4C8*	E	1796	18E, C18NE	M	Y		08/82 ▸	1334013	**506003**	CR
1800 E,1800 i *JCW/581/587/588/589/5C8 5R8*	E	1796	18E	A	Y		▸ 08/86	1334008	**506005**	CR
1800 E,1800 i *JCW/581/587/588/589/5C8 5R8*	E	1796	18E	A	Y		08/81 ▸	1334013	**506003**	CR
2000 i *JB3/GT1/GT8/GT9, JB56 JCB367, JCK367, JB4/6/68 69, JK3/GT1/GT8/GT9*	E	1998	20SEH, 20NE, C20NE	M	Y		08/85 ▸ 08/88	1334008	**506005**	CR
2000 i *JB4/6, JCB567, JB5/6/68 69/GT1/GT8/GT9*	E	1998	20SEH, 20NE, C20NE	A	Y		08/85 ▸ 08/88	1334008	**506005**	CR
1600 D *JCT/484/486/489/4A8/881 884/886/887/889, JT4/11 68/69, JT8/11/68/69*	D	1598	1600D	M	Y		▸ 08/88	1334014	**506087**	CR
1600 D *JCT/581/584/586/587/588 589, JT5/11/68/69*	D	1598	1600D	A	Y		▸ 08/88	1334014	**506087**	CR
Astra F (91>98)										
1.4,1.4 i *TA4/306/308/319/368/408 419/435/468, TAK436, TAC 408/419/468*	E	1389	C14NZ, 14NV, 14SE, C14SE X14NZ	M	Y		09/91 ▸ 02/01	1334065	**506007**	CR
1.4 i 16V *TAK136, TA1/308/319/368*	E	1389	X14XE	M	Y	23 teeth	07/95 ▸ 02/01	1334066	**506308**	CR
1.4 i *TA6/308/319/368*	E	1389	14SE, C14SE	A	Y		03/91 ▸ 03/96	1334065	**506007**	CR
1.4 i 16V	E	1389	X14XE	A	Y	23 teeth	07/95 ▸ 01/98	1334066	**506308**	CR
1.6 i	E	1598	16LZ2	M	Y		09/91 ▸ 01/98	1334054	**506310**	CR
1.6 i *TAN/408/419/468*	E	1598	C16SE, X16SZR, C16NZ, X16SZ	M	Y		09/91 ▸ 01/98	1334065	**506007**	CR
1.6 i,1.6 i 16V *TAM/301/306/308/319/368*	E	1598	X16XEL, X16SZ	M	Y	23 teeth	09/91 ▸ 02/01	1334066	**506308**	CR
1.6 i *TAN/608/619/668*	E	1598	C16SE, X16SZR, C16NZ, X16SZ	A	Y		09/91 ▸ 01/98	1334065	**506007**	CR
1.6 i,1.6 i 16V *TAM/608/619/668*	E	1598	X16XEL, X16SZ	A	Y	23 teeth	09/91 ▸ 01/98	1334066	**506308**	CR
1.8 i 14254439 ▸	E	1796	C18NZ	M	Y		▸ 01/98	1334054	**506310**	CR
1.8 i	E	1796	C18NZ	M	Y		09/91 ▸	1334008	**506005**	CR
1.8 i 14254439 ▸	E	1796	C18NZ	A	Y		▸ 01/98	1334054	**506310**	CR
1.8 i ▸ 14254438	E	1796	C18NZ	A	Y		09/91 ▸ 1993	1334008	**506005**	CR
1.8 i 16V *TAKU46*	E	1799	C18XE, C18XEL, X18XE	M	Y		07/93 ▸ 02/01	1334053	**506309**	CR
1.8 i 16V *TAKU46*	E	1799	C18XEL, C18XE, X18XE	M	Y		07/93 ▸ 02/01	1334139	**506856**	CR
1.8 i 16V	E	1799	X18XE	A	Y		08/94 ▸ 02/01	1334139	**506856**	CR
1.8 i 16V	E	1799	X18XE	A	Y		07/95 ▸ 01/98	1334053	**506309**	CR
2.0 i *TAD3G0, TAKD46* 14608701 ▸	E	1998	C20NE	M	Y		▸ 02/01	1334054	**506310**	CR
2.0 i 16V *TAJ/3G0/3G1/3G6, TAW/300 401/406* 14142840 ▸	E	1998	X20XEV, C20XE	M	Y		▸ 01/98	1334053	**506309**	CR
2.0 i 16V *TAJ/3G0/3G1/3G6, TAW/300 401/406* 14142840 ▸	E	1998	C20XE, X20XEV	M	Y		▸ 01/98	1334139	**506856**	CR
2.0 i 14608701 ▸	E	1998	C20NE	A	Y		▸ 02/01	1334054	**506310**	CR

• **New** Nouveau **Nuevo** Novo **Nuovo** Nieuw **Neu** Yeni Новый Nou

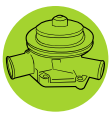

OPEL (.../...)

Astra F (91>98) (.../...)

2.0 i 16V	TAW/600/601/606	E	1998	X20XEV	A	Y		07/94 ▸ 01/98	1334139	**506856**	CR	
2.0 i 16V	TAW/600/601/606	E	1998	X20XEV	A	Y		01/95 ▸ 01/98	1334053	**506309**	CR	
2.0 i 16V	TAJ/3G0/3G1/3G6	E	1998	C20XE	M	Y		07/94 ▸	1334038	**506080**	CR	
▸ 14142839												
2.0 i	TAD3G0, TAKD46	E	1998	C20NE	M	Y		09/91 ▸	1334008	**506005**	CR	
▸ 14608700												
2.0 i		E	1998	C20NE	A	Y		09/91 ▸	1334008	**506005**	CR	
▸ 14608700												
1.7 TD Turbo	TA9/419/468/4E0/4E1/4E6	D	1686	17TD	M	Y		09/91 ▸	1334052	**506153**	N	
1.7 D,1.7 TD	TAA/408/419/468, TAF/408	D	1699	X17DTL, 17D, 17DR	M	Y		▸ 01/98	1334139	**506856**	CR	
1.7 TD Ecoturbo	419/435/468											
▸ 14363652												
1.7 D,1.7 TD Ecoturbo	TAA/408/419/468, TAF/408	D	1699	17DR, X17DTL, 17D	M	Y		1993 ▸ 01/98	1334053	**506309**	CR	
▸ 14363651	419/435/468											
1.7 TD		D	1699	X17DTL	M	Y		07/94 ▸ 01/98	1334052	**506153**	N	
1.7 D	TAF/408/419/435/468	D	1699	17D, 17DR	M	Y		09/91 ▸	1334014	**506087**	CR	
▸ 14363651												

Astra G (98>)

1.6 i GNV	G	1598	Z16YNG	M	Y		03/03 ▸	6334035	**506703**	CR	
1.2 i 16V	E	1199	X12XE, Z12XE	M	Y		02/98 ▸	6334025	**506601**	N	
19T63670 ▸ 19T63669											
1.4 i 16V	E	1389	Z14XE, X14XE	M	Y			6334035	**506703**	CR	
02MV7225 ▸											
1.4 i	E	1389	X14NZ	M	Y		09/98 ▸ 12/02	1334065	**506007**	CR	
1.4 i 16V	E	1389	X14XE, Z14XE	A	Y			6334035	**506703**	CR	
02MV7225 ▸											
1.4 i 16V	E	1389	X14XE, Z14XE	M	Y	23 teeth	02/98 ▸	1334066	**506308**	CR	
▸ 02MV72224											
1.4 i 16V	E	1389	Z14XE, X14XE	A	Y	23 teeth	02/98 ▸	1334066	**506308**	CR	
▸ 20u75998											
1.6 i,1.6 i 16V	E	1598	Z16XE, C16SEL, X16XEL	M	Y			6334035	**506703**	CR	
02MV7225 ▸											
1.6 i	E	1598	X16SZR, Z16SE/E4	M	y			6334039	**506785**	CR	
02MZ75254 ▸											
1.6 i Twinport 16V	E	1598	Z16XEP	M	Y		02/00 ▸	1334142	**506837**	N	
1.6 i,1.6 i 16V	E	1598	C16SEL, Z16XE, X16XEL	A	Y			6334035	**506703**	CR	
02MV7225 ▸											
1.6 i	E	1598	Z16SE/E4, X16SZR	A	y			6334039	**506785**	CR	
20U75999 ▸											
1.6 i	E	1598	X16SZR, Z16SE/E4	A	Y		02/98 ▸	1334065	**506007**	CR	
▸ 02LC6175											
1.6 i,1.6 i 16V	E	1598	X16XEL, Z16XE, C16SEL	M	Y	23 teeth	02/98 ▸	1334066	**506308**	CR	
02LD5820 ▸ 02LD5820											
1.6 i,1.6 i 16V	E	1598	X16XEL, Z16XE, C16SEL	A	Y	23 teeth	02/98 ▸	1334066	**506308**	CR	
02LD5820 ▸ 02MV7224											
1.6 i	E	1598	Z16SE/E4, X16SZR, Z16SE/E2	M	Y		02/98 ▸	1334065	**506007**	CR	
▸ 02MZ5253											
1.8 i 16V	0BP07K	E	1796	X18XE1, Z18XE, Z18XEL	M	Y		09/98 ▸	1334135	**506656**	CR	
1.8 i 16V		E	1796	Z18XE, X18XE1	A	Y		09/98 ▸	1334135	**506656**	CR	
2.0 i 16V		E	1998	X20XEV	M	Y		02/98 ▸ 12/99	1334053	**506309**	CR	
2.0 i 16V,2.0 i Turbo 16V		E	1998	Z20LET, X20XEV, X20XER	M	Y		02/98 ▸	1334139	**506856**	CR	
2.0 i 16V		E	1998	X20XEV	A	Y		02/98 ▸ 12/99	1334139	**506856**	CR	
2.0 i 16V		E	1998	X20XEV	A	Y		02/98 ▸ 12/99	1334053	**506309**	CR	
2.2 i 16V	0BP07P, BF67P1	E	2198	Z22SE	M	Y		02/00 ▸	6334002	**506839**	N	
2.2 i 16V	0BP07P, BF67P1	E	2198	Z22SE	A	Y		02/00 ▸	6334002	**506839**	N	
1.7 CDTI,1.7 DTi 16V	TU3/5JA/5JF	D	1686	Y17DT, Z17DTL	M	Y		2000 ▸	6334019	**506697**	N	
1232414 ▸												
1.7 DTi 16V	TU35JA	D	1686	Y17DT	M	Y		02/00 ▸	6334038	**506481**	N	
▸ 073532												
1.7 TD,1.7 TD Ecoturbo		D	1699	X17DTL	M	Y		02/98 ▸	1334053	**506309**	CR	
1.7 TD,1.7 TD Ecoturbo		D	1699	X17DTL	M	Y		02/98 ▸ 08/00	1334139	**506856**	CR	
2.0 DTi 16V,2.0 Di 16V		D	1995	Y20DTH, Y20DTL, X20DTL	M	Y		02/98 ▸	6334040	**506657**	N	

• **New** Nouveau **Nuevo** Novo **Nuovo** Nieuw **Neu** Yeni Новый Nou

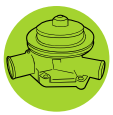

Valeo

Water pump
Pompe à eau
Bomba de água
Bomba de água
Pompa acqua
Waterpomp
Wasserpumpen
Pompa wodna
Vízpumpa
Su pompasi
ВОДЯНОЙ НАСОС
Vodní pumpa
Pompa de apă

Type Ctr.	cc						OE	Valeo		
OPEL (.../...)										
Astra G (98>) (.../...)										
2.0 DTi 16V,2.0 Di 16V	D	1995	Y20DTL, Y20DTH, X20DTL	A	Y		02/98 ▸	6334040	**506657**	N
2.2 DTI 16V *BF67PG*	D	2171	Y22DTR	M	Y		03/01 ▸	6334040	**506657**	N
Astra H (2004>)										
1.2 i Twinport 16V	E	1229	Z12XEP	M	Y		03/04 ▸	1334145	**506838**	N
1.4 i Twinport 16V	E	1364	Z14XEL,Z14XEP	M	Y		03/04 ▸	1334145	**506838**	N
1.4 i GPL 16V	F	1398	A14XEL	M	Y		03/05 ▸ 09/10	1334145	**506838**	N
1.6 i 16V,1.6 i Turbo 16V 1.6 i Twinport 16V	E	1598	Z16XEP, Z16LET	M	Y		03/04 ▸	1334142	**506837**	N
1.6 i Twinport 16V	E	1598	Z16XEP	A	Y		03/04 ▸	1334142	**506837**	N
1.8 i 16V	E	1796	Z18XE	M	Y		03/04 ▸	1334135	**506656**	CR
1.8 i 16V	E	1796	Z18XER	M	Y		08/05 ▸	1334142	**506837**	N
1.8 i 16V	E	1796	Z18XE	A	Y		03/04 ▸	1334135	**506656**	CR
1.8 i 16V	E	1796	Z18XER	A	Y		08/05 ▸	1334142	**506837**	N
2.0 i Turbo 16V	E	1998	Z20LER, Z20LEL, Z20LEH	M	Y		03/04 ▸	1334139	**506856**	CR
1.3 CDTI 16V	D	1248	Z13DTH	M	Y		08/05 ▸	6334001	**506716**	vvv
1.7 CDTI,1.7 CDTI 16V	D	1686	Z17DTH, Z17DTL	M	Y		03/04 ▸	1334143	**506697**	N
1.9 CDTI,1.9 CDTI 16V	D	1910	Z19DTL, Z19DT, Z19DTH, Z19DTJ	M	Y		07/04 ▸	6334003	**506590**	SS
1.9 CDTI,1.9 CDTI 16V	D	1910	Z19DTJ, Z19DT	A	Y		09/05 ▸	6334003	**506590**	SS
Calibra										
2.0 i 16V,2.0 i Turbo 16S *JM0/7*/71A/71C/72L/7IC*	E	1998	X20XEV, C20XE, C20LET	M	Y			1334053	**506309**	CR
2.0 i 16V,2.0 i Turbo 16S *JM0/71A/71C/72L*	E	1998	C20XE, C20LET	M	Y		09/89 ▸	1334038	**506080**	CR
2.0 i *JM0/7DA/7DC*	E	1998	C20NE	M	Y		09/89 ▸ 06/92	1334008	**506005**	CR
2.0 i *JM0/7DA/7DC*	E	1998	C20NE	M	Y		07/92 ▸	1334054	**506310**	CR
2.0 i 16V *JM0/7*/7IC*	E	1998	X20XEV	M	Y		06/94 ▸ 07/97	1334139	**506856**	CR
2.0 i *JM07DB*	E	1998	C20NE	A	Y		09/89 ▸ 06/92	1334008	**506005**	CR
2.0 i *JM07DB*	E	1998	C20NE	A	Y		07/92 ▸	1334054	**506310**	CR
2.0 i 16V *JM07**	E	1998	X20XEV	A	Y		06/94 ▸	1334053	**506309**	CR
2.0 i 16V *JM07**	E	1998	X20XEV	A	Y		06/94 ▸ 07/97	1334139	**506856**	CR
2.5 i V6 24V *JM07**	E	2498	C25XE, X25XE-170	M	Y		05/93 ▸	1334072	**506048**	N
2.5 i V6 24V *JM07**	E	2498	C25XE, X25XE-170	M	Y		05/93 ▸	1334131	**506527**	N
2.5 i V6 24V *JM07**	E	2498	C25XE, X25XE-170	A	Y		05/93 ▸	1334131	**506527**	N
2.5 i V6 24V *JM07**	E	2498	X25XE-170, C25XE	A	Y		05/93 ▸	1334072	**506048**	N
Corsa A (82>93)										
1.0 *S24/08, S28/08/68, SC2/491/492/493 494/4B9/891/892/893/894/8B9, SC4 249/24B/289/28B, SC5/249/289*	E	993	10S	M	Y		10/82 ▸ 1993	1334071	**506031**	N
1.2,1.2 i *S7408, S64/GV/GV0/GV6/NC NC0/NC6*	E	1195	C12NZ, E12GV, 12NC	M	Y		01/85 ▸ 1993	1334027	**506031**	N
1.2 i *S7408*	E	1195	C12NZ	M	Y		07/91 ▸ 1993	1334065	**506007**	CR
1.2 *S64/08/19/68/NV0/NV1/NV6, S68/08/68 SC4/649/64B/689/68B, SC5/649/689 SM808, SC6/491/493/494/4B9/893/8A9 8AB*	E	1196	12ST, 12NV	M	Y		10/82 ▸ 1993	1334065	**506007**	CR
1.2 *S64/08/19/68/NV0/NV1/NV6, S68/08/68 SC4/649/64B/689/68B, SC5/649/689 SM808, SC6/491/492/493/494/4B9/893 8A9/8AB*	E	1196	12ST, 12NV	M	Y		10/82 ▸ 1993	1334027	**506031**	N
1.3,1.3 i *SA4/08/19/68/GT8, SC5A49 SC4/A49/A4B, SCA/491/492 493/494/4B9/4R9*	E	1297	13SB, C13N	M	Y		10/82 ▸ 09/90	1334027	**506031**	N
1.3,1.3 i *SA4/08/19/68/GT8, SC5A49 SC4/A49/A4B, SCA/491/492 493/494/4B9/4R9*	E	1297	13SB, C13N, 13NB	M	Y		10/82 ▸ 09/90	1334023	**506006**	CR
1.4,1.4 i *S34/08/11/19/68/GT8/SP0 SC4/08/19/68*	E	1389	14NV, C14NZ	M	Y		▸ 1993	1334065	**506007**	CR
1.4,1.4 i *S4308, S34/08/11/19/68 GT8/SP0, SC4/08/19/68*	E	1389	C14NZ, 14NV	M	Y		09/89 ▸	1334024	**506030**	CR
1.4,1.4 i *S4308, S34/08/11/19/68 GT8/SP0, SC4/08/19/68*	E	1389	C14NZ, 14NV	M	Y		09/89 ▸ 1993	1334027	**506031**	N
1.6 i *S, SP308*	E	1598	E16SE, C16NZ, C16SE	M	Y		▸ 03/93	1334065	**506007**	CR

• **New** Nouveau **Nuevo** Novo **Nuovo** Nieuw **Neu** Yeni Новый Nou

Valeo

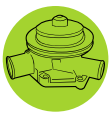

Type Ctr.		CC						OE	Valeo		
OPEL (.../...)											
Corsa A (82>93) (.../...)											
1.6 i *S, SP308*	E	1598	E16SE, C16SE, C16NZ	M	Y		03/88 ▸ 03/93	1334027	**506031**	N	
1.6 i *S, SP308* ▸ 02J22349	E	1598	C16SE, E16SE, C16NZ	M	Y		03/88 ▸	1334024	**506030**	CR	
1.5 D,1.5 TD *SF4/08/19/68, SG4/08/19 68*	D	1488	4EC1, T4EC1	M	Y		09/87 ▸ 07/90	1334016	**506085**	N	
1.5 D,1.5 TD *SB4/08/19/68, SF4/08/19 68, SG4/08/19/68*	D	1488	4EC1, T4EC1	M	Y		03/88 ▸ 1993	1334102	**506153**	N	
1.5 D,1.5 TD *SB4/08/19/68, SF4/08/19 68, SG4/08/19*	D	1488	4EC1,T4EC1	M	Y		07/91 ▸ 1993	6334004	**506482**	N	
Corsa B (93>2000)											
1.0 i 12V *S93/CN1/DN1*	E	973	X10XE	M	Y		03/97 ▸ 08/00	6334022	**506601**	N	
1.2,1.2 i *S93/CB1/DB1* ▸ X4000001 ▸ W399999	E	1195	12NZ, X12SZ, C12NZ	M	Y		03/93 ▸	1334065	**506007**	CR	
1.2 i 16V	E	1199	X12XE	M	Y		03/98 ▸ 08/00	6334022	**506601**	N	
1.2 i 16V	E	1199	X12XE	A	Y		03/98 ▸ 08/00	6334022	**506601**	N	
1.4 i 16V *S93/CJ1/DJ1* ▸ 02LD5821 ▸ 02LD5820	E	1389	X14XE	M	Y	23 teeth	07/95 ▸	1334066	**506308**	CR	
1.4 i 16V *S93/CJ1/DJ1* ▸ 02LD5821 ▸ 02LD5820	E	1389	X14XE	A	Y	23 teeth	07/95 ▸	1334066	**506308**	CR	
1.4 i *S93/CM1/DM1* ▸ X3000001 ▸ W399999	E	1389	C14NZ, C14SE, X14SZ	M	Y		03/93 ▸ 1998	1334065	**506007**	CR	
1.4 i *S93/CM1/DM1* ▸ X3000001 ▸ W699999	E	1389	X14SZ, C14NZ	A	Y		09/93 ▸ 1998	1334065	**506007**	CR	
1.6 i,1.6 i 16V ▸ 02LD5820	E	1598	C16XE, C16SEL, X16XE	M	Y	23 teeth	03/93 ▸	1334066	**506308**	CR	
1.5 TD	D	1488	15TD	M	Y		▸ 08/00	1334121	**506483**	N	
1.5 D,1.5 TD	D	1488	15D,15TD	M	Y		03/93 ▸	6334004	**506482**	N	
1.7 D *S93/CL1/DL1*	D	1686	X17D	M	Y		▸ 08/00	1334115	**506481**	N	
1.7 D *S93/CL1/DL1*	D	1686	X17D	M	Y		03/93 ▸	1334052	**506153**	N	
Corsa C (2000>2003)											
1.0 i 12V *0AB/08C/68C* ▸ 19T75858	E	973	Z10XE	M	Y		09/00 ▸	6334025	**506601**	N	
1.2 i 16V *0AB/08E/68E, 0AE/08E/68E 0AS/08E/68E*	E	1199	Z12XE	M	Y		09/00 ▸	6334025	**506601**	N	
1.4 i 16V *0AE/08G/68G, 0AS/08G/68G*	E	1389	Z14XE	M	Y			6334035	**506703**	CR	
1.4 i 16V *0AE/08G/68G, 0AS/08G/68G*	E	1389	Z14XE	M	Y	23 teeth	09/00 ▸	1334066	**506308**	CR	
1.4 i 16V *0AE/08G/68G*	E	1389	Z14XE	A	Y			6334035	**506703**	CR	
1.4 i 16V *0AE/08G/68G*	E	1389	Z14XE	A	Y	23 teeth	09/00 ▸	1334066	**506308**	CR	
1.7 DI 16V,1.7 DTi 16V *0AB/08J/68J, 0AE/08J/68J* ▸ 743475 ▸ 1232414 *0AS/08J/68J*	D	1686	Y17DT, Y17DTL	M	Y		09/00 ▸	6334019	**506697**	N	
Corsa C (2003>)											
1.0 i Twinport 12V *AB68CF, AC08CF, AC68CF AB0/8CF*	E	998	Z10XEP	M	Y		09/03 ▸	6334022	**506601**	N	
1.0 i Twinport 12V *AB68CF, AC08CF, AC68CF AB0/8CF*	E	998	Z10XEP	M	Y		09/03 ▸ 07/06	1334145	**506838**	N	
1.2 i 16V *AB68EE, AB0/8EE, AC0/8EB 8EE, AC6/8EB/8EE, AE0/8EB 8EE, AE6/8EB/8EE, AS0/8EB 8EE, AS6/8EB/8EE*	E	1199	Z12XE	M	Y		09/03 ▸	6334025	**506601**	N	
1.2 i 16V *AB68EE, AB0/8EE, AC0/8EB 8EE, AC6/8EB/8EE, AE0/8EB 8EE, AE6/8EB/8EE, AS0/8EB 8EE, AS6/8EB/8EE*	E	1199	Z12XE	M	Y		09/03 ▸ 08/04	1334145	**506838**	N	
1.2 i Twinport 16V	E	1229	Z12XEP	M	Y		09/03 ▸ 07/06	1334145	**506838**	N	
1.4 i Twinport 16V *F08/GAB/GS5, F68/GAB/GS5*	E	1364	Z14XEP	M	Y		09/03 ▸	6334035	**506703**	CR	
1.4 i Twinport 16V *F08/GAB/GS5, F68/GAB/GS5*	E	1364	Z14XEP	M	Y		09/03 ▸ 07/06	1334145	**506838**	N	
1.8 16V *AS08KE, AS68KE*	E	1796	Z18XE	M	Y		09/03 ▸	1334135	**506656**	CR	
1.3 CDTI 16V *AB68FA, AC08FA, AC68FA AE08FA, AE68FA, AS08FA AS68FA, AB0/8FA*	D	1248	Z13DT	M	Y		09/03 ▸	6334001	**506716**	vvv	

• **New** Nouveau **Nuevo** Novo **Nuovo** Nieuw **Neu** Yeni Новый Nou

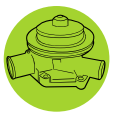

Valeo

Water pump
Pompe à eau
Bomba de água
Bomba de água
Pompa acqua
Waterpomp
Wasserpumpen
Pompa wodna
Vízpumpa
Su pompasi
ВОДЯНОЙ НАСОС
Vodní pumpa
Pompa de apă

			CC					OE	Valeo			
OPEL (.../...)												
Corsa C (2003>) (.../...)												
1.7 CDTI 16V *AE68JK, AS08JK, AS68JK*	D	1686	Z17DTH	M	Y		09/03 ▸	1334143	**506697**	N	
1232415 ▸ *AE0/8JK*											
Corsa D (2006>)												
1.3 CDTI 16V	D	1248	Z13DTJ, Z13DTH	M	Y		07/06 ▸	6334001	**506716**	vvv	
1.0 i Twinport 65 12V	E	997	A10XEP	M	Y		01/10 ▸	1334145	**506838**	N	
1.0 i Twinport 12V	E	998	Z10XEP	M	Y		07/06 ▸	1334145	**506838**	N	
1.2 i Twinport 16V	E	1229	Z12XEP	M	Y		07/06 ▸	1334145	**506838**	N	
1.4 i Twinport 16V	E	1364	Z14XEP	M	Y		07/06 ▸	1334145	**506838**	N	
1.4 i Twinport 16V	E	1364	Z14XEP	A	Y		07/06 ▸	1334145	**506838**	N	
1.3 CDTI 16V	D	1248	A13DTC,A13DTE,A13DTR,Z13DTE	M	Y		01/10 ▸	1334711	•**506983**	V	
Frontera (91>98)												
2.0 i *52SUD2, 55SUD2*	E	1998	C20NE, X20SE	M	Y		▸ 09/98	1334054	**506310**	CR	
14608701 ▸											
2.0 i *52SUD2*	E	1998	C20NE	M	Y		03/91 ▸	1334008	**506005**	CR	
▸ 14608700											
2.2 i 16V *54MWL4*	E	2198	X22XE	M	Y		04/95 ▸ 09/98	1334053	**506309**	CR	
2.2 i 16V *54MWL4*	E	2198	X22XE	M	Y		04/95 ▸ 09/98	1334139	**506856**	CR	
2.4 i *53MWL4*	E	2410	C24NE	M	Y		03/91 ▸ 04/95	1334021	**506084**	V	
2.3 TD *5JM/UL4/WL4*	D	2260	23DTR	M	Y		03/91 ▸ 04/95	1334021	**506084**	V	
2.5 TDS *5KMWL4, 5KSUD2*	D	2499	25TDS	M	Y		06/96 ▸ 09/98	1334123	**506692**	N	506589
2.8 TDi *5BMWL4, 5BSUD2*	D	2771	4JB1-TC	M	Y		05/95 ▸ 07/96	1334113	**506929**	N	
Kadett B (65>73)												
1700	E	1698	17N		Y		08/67 ▸ 07/70	1334140	**506048**	N	
1900	E	1897	19S		Y		08/67 ▸ 07/73	1334140	**506048**	N	
Kadett C (73>79)												
1000 S	E	993	10S	M	Y		09/75 ▸ 07/79	1334071	**506031**	N	
1200 S	E	1196	12S	M	Y		09/75 ▸ 07/79	1334071	**506031**	N	
1200 S	E	1196	12S	A	Y		09/75 ▸ 07/79	1334071	**506031**	N	
Kadett D (79>84)												
1.0	E	993	10S, 10N	M	Y		08/79 ▸ 07/82	1334027	**506031**	N	
1.2 *T82/50/80, T83/50/58/58A/80, T84/50 543/544/58/584/58A/80/88*	E	1196	12S, 12N	M	Y		08/79 ▸ 07/84	1334071	**506031**	N	
1.3 *T33/274/278, T34/274/278, T46/274 278/294/298, T84/90A/943/94R*	E	1297	13N, 13S	M	Y		08/79 ▸ 08/84	1334023	**506006**	CR	
1.3 *T34278, T33/278, T46/278/298, T84 90/94*	E	1297	13N, 13S	A	Y		08/79 ▸ 08/84	1334023	**506006**	CR	
1.6 *T84/44A/4AR*	E	1598	16SH	M	Y		09/81 ▸ 08/84	1334013	**506003**	CR	
1.8 i *T82/W33/W43*	E	1796	18E	M	Y		05/83 ▸ 08/84	1334013	**506003**	CR	
Kadett E (84>91)												
1.2 S *E83/543/544/583/584/58B, E84/543 544/54B/583/584/58B, T54/08/19/35 48, T58/08/19/35/48*	E	1196	12ST, 12S	M	Y		08/84 ▸	1334027	**506031**	N	
1.3,1.3 N,1.3 S,1.3 i *E83/943/944/94B/983/984 98B, T9, E84/943/944/94B 94R/983/984/98B, T94/08 19/35/48/GT, TN448, T98 08/19/35/48*	E	1297	13N, 13S, 13NB, C13N	M	Y		08/84 ▸	1334023	**506006**	CR	
1.3 N,1.3 S,1.3 i *E83/953/954/95B, E84/953 954/95B, T95/08/19/35/48*	E	1297	13S, 13NB, 13N	A	Y		08/84 ▸	1334023	**506006**	CR	
1.4 S,1.4 i *T34/08/19/35/48/67, TC4 19/48*	E	1389	C14NZ, 14NV	M	Y		09/89 ▸	1334065	**506007**	CR	
1.4 S,1.4 i	E	1389	C14NZ	M	Y		09/89 ▸	1334024	**506030**	CR	
▸ 19311737											
1.6 S,1.6 i *TR4/67, TU4/19/35/48/GT*	E	1598	16SV, C16NZ, E16NZ, C16LZ	M	Y			1334065	**506007**	CR	
02J22350 ▸ *TU8/08/19/35/48*											
1.6 S *E83/443/444/44B/483/484/48B, E84 433/443/444/44B/483/484/48B/4CR*	E	1598	16S-OHC	M	Y		08/84 ▸ 1986	1334013	**506003**	CR	

• **New** Nouveau **Nuevo** Novo **Nuovo** Nieuw **Neu** Yeni Новый Nou

Valeo

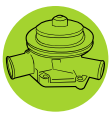

		Type Ctr.		cc					OE	Valeo		
OPEL (.../...)												
Kadett E (84>91) (.../...)												
1.6,1.6 S,1.6 i	*TU3/19, TU5/48/GT*	E		1598	E16NZ, C16NZ, C16LZ, 16SV	A	Y			1334065	**506007**	CR
02.J22350 ▸												
1.6 S	*E83/453/454/45B/954, E84/453/454 45B*	E		1598	16S-OHC	A	Y		08/84 ▸	1334013	**506003**	CR
1.6	*TU3/08/48*	E		1598	16SV		Y			1334065	**506007**	CR
02.J22350 ▸												
1.6 S,1.6 i	*TR4/67, TU4/08/19/35/48 67/GT, TU8/08/19/35/48*	E		1598	C16LZ, 16SV, C16NZ, E16NZ	M	Y		09/86 ▸	1334024	**506030**	CR
▸ 02.J22349												
1.6,1.6 S,1.6 i	*TU3/19, TU5/08/19/35/48 GT*	E		1598	E16NZ, C16LZ, C16NZ, 16SV	A	Y		09/86 ▸	1334024	**506030**	CR
▸ 02.J22349												
1.6	*TU3/08/48*	E		1598	16SV		Y		01/89 ▸	1334024	**506030**	CR
▸ 02.J22349												
1.8 i		E		1796	18E, 18SE	A	Y		▸ 1991	1334054	**506310**	CR
14270601 ▸												
1.8 i		E		1796	18SE, 18E, C18NE	A	Y		09/84 ▸	1334013	**506003**	CR
▸ 14056060												
1.8 E,1.8 i	*E82/W34, TW3/08/19/48/T08 T19/T35/T48*	E		1796	18E, 18SE, C18NE	M	Y		08/84 ▸	1334013	**506003**	CR
▸ 14056060												
1.8,1.8 E,1.8 i	*E82/W34, TW3/08/19/48/T08 T19/T35/T48*	E		1796	18SE, C18NZ, 18E, S18NV	M	Y			1334008	**506005**	CR
14237770 ▸ 14254438												
1.8,1.8 i		E		1796	S18NV, 18E, 18SE	A	Y			1334008	**506005**	CR
1405601 ▸ 14254438												
1.8 E,1.8 i	*E82/W34, TW3/08/19/48/T08 T19/T35/T48*	E		1796	18E, 18SE, C18NZ	M	Y			1334054	**506310**	CR
14270600 ▸ 14270600												
2.0 i 16V		E		1998	C20XE	M	Y		▸ 08/91	1334139	**506856**	CR
14142839 ▸												
2.0 i 16V	*TH3/08/48*	E		1998	20XE	M	Y			1334053	**506309**	CR
14142839 ▸												
2.0 i	*TB3/67, TK3/08/48*	E		1998	C20NE, 20NE, 20SEH	M	Y			1334054	**506310**	CR
14608701 ▸												
2.0 i,2.0 i 16V	*TB3/67, TH3/08/48, TK3/08 48*	E		1998	C20NE, C20XE, 20SEH, 20XE	M	Y		09/86 ▸	1334038	**506080**	CR
▸ 14142838												
2.0 i		E		1998	20NE, C20NE	M	Y		09/86 ▸	1334008	**506005**	CR
▸ 14608700												
1.5 D	*TG4/08/19/35/48*	D		1488	TC4EC1	M	Y		1988 ▸	1334016	**506085**	N
1.6 D	*E83/T43/T44/T83/T84/TT4, E84/T43 T44/T4B/T83/T84/T8B, TT4/08/19/35 48, TT8/08/19/35/48*	D		1598	16D	M	Y		▸ 1989	1334014	**506087**	CR
14498631 ▸												
1.6 D	*E83/T53/T54, E84/T53/T54/T5B, TT5 08/19/35/48*	D		1598	16D	A	Y		08/84 ▸	1334014	**506087**	CR
▸ 14503756												
1.7 D	*TF*	D		1699	17DV	M	Y		▸ 1991	1334139	**506856**	CR
14363650 ▸												
1.7 D	*TF4/08/19/35*	D		1699	17DV		Y			1334053	**506309**	CR
1436.650 ▸												
1.7 D	*TF4/08/19/35*	D		1699	17DV		Y		▸ 1991	1334139	**506856**	CR
14363650 ▸												
1.7 D	*TF*	D		1699	17DV	M	Y		01/89 ▸	1334014	**506087**	CR
▸ 14363649												
1.7 D	*TF4/08/19/35*	D		1699	17DV		Y		01/89 ▸	1334014	**506087**	CR
▸ 14363649												
Manta B (75>88)												
1300 N,1300 S	*582984, 532/984, M98/53 55/58/59/B53/B58*	E		1297	13N, 13S		Y		03/79 ▸ 07/86	1334023	**506006**	CR
1600 N,1600 S		E		1584	16N, 16S-CVH		Y		08/75 ▸ 07/81	1334081	**506048**	N
1800 S	*MV5/53/58*	E		1796	18S	A	Y		08/84 ▸ 07/86	1334013	**506003**	CR
1800 S	*582V44, 532/V44, MV4/53 58, MV8/53/58*	E		1796	18S		Y		03/82 ▸ 07/86	1334013	**506003**	CR
1900 N,1900 S		E		1897	19S, 19N		Y		08/75 ▸ 07/81	1334081	**506048**	N
2.0 S,2000 E	*MB453, MB853, 532/C4W MC4/53/58*	E		1979	20S, 20E		Y		12/77 ▸	1334081	**506048**	N
2.0 S,2000 E	*MB5/53, MC5/53/58*	E		1979	20E, 20S	A	Y			1334097	**506089**	V
C6067587 ▸ 88												

• **New** Nouveau **Nuevo** Novo **Nuovo** Nieuw **Neu** Yeni Новый Nou

	Type Ctr.		cc					OE	Valeo	
OPEL (.../...)										
Manta B (75>88) (.../...)										
2.0 S,2000 E *MB453, MB853, 532/C4W*	E	1979	20E, 20S		Y			1334097	**506089**	V
C6067587 ▸ 88 *MC4/53/58*										
2.0 S,2000 E *MB5/53, MC5/53/58*	E	1979	20E, 20S	A	Y		12/77 ▸	1334081	**506048**	N
▸ C6067586										
Meriva A (2003>2010)										
1.4 i Twinport 16V	E	1364	Z14XEP	M	Y		09/04 ▸ 05/10	1334145	**506838**	N
1.6 i	E	1598	Z16SE/E4	M	y		05/03 ▸	6334039	**506785**	CR
1.6 i 16V	E	1598	Z16XE	M	Y		05/03 ▸	6334035	**506703**	CR
1.6 i 16V,1.6 i Turbo 16V	E	1598	Z16LET, Z16XEP	M	Y		08/04 ▸	1334142	**506837**	N
1.8 i 16V	E	1796	Z18XE	M	Y		05/03 ▸	1334135	**506656**	CR
1.3 CDTi,1.3 CDTi 16V	D	1248	Y13DT, Z13DT, Z13DTJ	M	Y		08/03 ▸	6334001	**506716**	vvv
1.7 CDTi 16V,1.7 DTi 16V	D	1686	Y17DT, Z17DTH	M	Y		05/03 ▸	6334019	**506697**	N
Meriva B (2010>)										
1.3 CDTi 16V	D	1248	A13DTE	M	Y		08/10 ▸	1334711	●**506983**	V
Monterey (91>98)										
3.1 TD *UBS/69D/69G*	D	3059	C4JG	M	Y		09/91 ▸ 06/98	1334113	**506929**	N
Monza										
2.0 i *AVC422*	E	1979	20E		Y		12/82 ▸ 07/84	1334097	**506089**	V
2.2 i *AVH/602/622*	E	2197	22E	A	Y		08/84 ▸ 08/86	1334097	**506089**	V
2.2 i *AVH/402/422*	E	2197	22E		Y		08/84 ▸ 08/86	1334097	**506089**	V
2.5 i *AVJ622*	E	2490	25E	A	Y		06/81 ▸ 08/86	1334081	**506048**	N
2.5 i *AVJ/402/422*	E	2490	25E		Y		06/81 ▸ 08/86	1334081	**506048**	N
2.8	E	2784	28H		Y		06/78 ▸ 05/81	1334081	**506048**	N
3.0 i	E	2968	C30NE	M	Y		08/85 ▸ 08/86	1334081	**506048**	N
3.0 *AVN622*	E	2968	30E	A	Y		06/81 ▸ 08/86	1334081	**506048**	N
3.0 *AVN/402/422*	E	2968	30E		Y		06/81 ▸ 08/86	1334081	**506048**	N
Omega A (86>94)										
1.8,1.8 i *VV4/19/35, VW4/19/35*	E	1796	18SV, E18NVR, 18SEH, S18NV 18NV	M	Y		▸ 02/94	1334054	**506310**	CR
14270601 ▸										
1.8,1.8 i *VV6/19/35, VW6/19/35*	E	1796	E18NVR, 18SEH, S18NV, 18SV	A	Y		▸ 02/94	1334054	**506310**	CR
14270601 ▸										
1.8,1.8 i *VV4/19/35, VW4/19/35*	E	1796	18SEH, 18SV, E18NVR, S18NV 18NV	M	Y		10/86 ▸	1334008	**506005**	CR
▸ 14270600										
1.8,1.8 i *VV6/19/35, VW6/19/35*	E	1796	18SV, 18SEH, S18NV, E18NVR	A	Y		10/86 ▸	1334008	**506005**	CR
▸ 14270600										
2.0 i *VC4/19/35, VC0/419/435, VD4/19/35*	E	1998	C20NEF, C20NE, 20SE, C20NEJ	M	Y		▸ 02/94	1334054	**506310**	CR
1468071 ▸										
2.0 i *VC6/19/35, VC0/619/635, VD6/19/35*	E	1998	20SE, C20NEF, C20NE, C20NEJ	A	Y		▸ 02/94	1334054	**506310**	CR
1468071 ▸										
2.0 i *VC4/19/35, VC0/419/435, VD4/19/35*	E	1998	C20NE, C20NEF, 20SE, C20NEJ	M	Y		10/86 ▸	1334008	**506005**	CR
▸ 14608700										
2.0 i *VC6/19/35, VC0/619/635, VD6/19/35*	E	1998	20SE, C20NE, C20NEF, C20NEJ	A	Y		10/86 ▸	1334008	**506005**	CR
▸ 14608700										
2.4 i *VM419, VM0635*	E	2410	C24NE	M	Y		10/88 ▸ 07/91	1334021	**506084**	V
2.4 i *VM619, VM0619*	E	2410	C24NE	A	Y		10/88 ▸ 07/91	1334021	**506084**	V
3000 i,3000 i 24V *VQL619, VQ4/19/35, VR0 419/435, VR4/19/35*	E	2968	C30NE, C30SE, C30LE	M	Y		02/87 ▸ 02/94	1334021	**506084**	V
3000 i,3000 i 24V *VQ6/19, VR0/435/619, VR6 19/35*	E	2968	C30SE, C30LE, C30NE	A	Y		02/87 ▸ 02/94	1334021	**506084**	V
2.3 D,2.3 TD *VE4/19/35, VE0/419/435 VF0419, VF4/19/35, VG0 419/435, VG4/19/35*	D	2260	23YD, 23DTR, 23YDT	M	Y		10/86 ▸ 02/94	1334021	**506084**	V
2.3 D,2.3 TD *VE0619, VE6/19/35, VF0619 VF6/19/35, VG619, VG0 619/635*	D	2260	23DTR, 23YD, 23YDT	A	Y		10/86 ▸ 02/94	1334021	**506084**	V
Omega B (94>)										
2.0 i 16V *M35, VBW469, F35*	E	1998	X20XEV	M	Y			1334139	**506856**	CR

• **New** Nouveau **Nuevo** Novo **Nuovo** Nieuw **Neu** Yeni Новый Nou

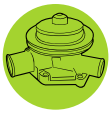

			CC						OE	Valeo		
OPEL (.../...)												
Omega B (94>) (.../...)												
2.0 i 16V	*M35, F35/, VBW/406/469*	E	1998	X20XEV	M	Y		02/94 ▸	1334053	**506309**	CR	
2.0 i	*M35, VBP406*	E	1998	X20SE, 20SE	M	Y		02/94 ▸	1334054	**506310**	CR	
2.0 i 16V	*M35/, VBW/606/669*	E	1998	X20XEV	A	Y		▸ 08/99	1334139	**506856**	CR	
2.0 i	*M35, VBP606*	E	1998	X20SE, 20SE	A	Y		02/94 ▸	1334054	**506310**	CR	
2.0 i 16V	*M35/, VBW/606/669*	E	1998	X20XEV	A	Y		02/94 ▸	1334053	**506309**	CR	
2.2 i 16V		E	2198	Z22XE	M	Y		08/99 ▸	1334053	**506309**	CR	
2.2 i 16V		E	2198	Z22XE	M	Y		08/99 ▸	1334139	**506856**	CR	
2.2 i 16V		E	2198	Z22XE	A	Y		08/99 ▸	1334053	**506309**	CR	
2.2 i 16V		E	2198	Z22XE	A	Y		08/99 ▸	1334139	**506856**	CR	
2.5 i V6 24V	*M35, VBY406*	E	2498	X25XE-170	M	Y		02/94 ▸	1334131	**506527**	N	
2.5 i V6 24V	*M35, VBY406*	E	2498	X25XE-170	M	Y		02/94 ▸	1334072	**506048**	N	
2.5 i V6 24V	*M35, VBY606*	E	2498	X25XE-170	A	Y		02/94 ▸	1334072	**506048**	N	
2.5 i V6 24V	*M35, VBY606*	E	2498	X25XE-170	A	Y		02/94 ▸	1334131	**506527**	N	
2.6 i V6 24V		E	2597	Y26SE	M	Y		09/00 ▸	1334131	**506527**	N	
2.6 i V6 24V		E	2597	Y26SE	M	Y		09/00 ▸	1334140	**506048**	N	
2.6 i V6 24V		E	2597	Y26SE	A	Y		09/00 ▸	1334140	**506048**	N	
2.6 i V6 24V		E	2597	Y26SE	A	Y		09/00 ▸	1334131	**506527**	N	
3.0 i V6 24V	*M35, VBZ406*	E	2962	X30XE	M	Y		02/94 ▸	1334140	**506048**	N	
3.0 i V6 24V	*M35, VBZ406*	E	2962	X30XE	M	Y		02/94 ▸	1334131	**506527**	N	
3.0 i V6 24V	*M35/, VBZ/606/6E0*	E	2962	X30XE	A	Y		02/94 ▸	1334140	**506048**	N	
3.0 i V6 24V	*M35/, VBZ/606/6E0*	E	2962	X30XE	A	Y		02/94 ▸	1334131	**506527**	N	
3.2 i V6 24V		E	3175	Y32SE	A	Y		09/00 ▸	1334140	**506048**	N	
3.2 i V6 24V		E	3175	Y32SE	A	Y		09/00 ▸	1334131	**506527**	N	
2.0 DTi 16V		D	1995	X20DTH	M	Y		09/97 ▸ 09/00	6334040	**506657**	N	
2.5 TD	*M35/, VB9/406/469*	D	2497	X25TD, U25TD	M	Y		02/94 ▸	1334124	**506289**	N	
2.5 TD	*M35/, VB9/406/606/669*	D	2497	X25TD, U25TD	A	Y		02/94 ▸	1334124	**506289**	N	
Rekord D (72>77)												
1700		E	1698	17N, 17S, 17L	M	Y		01/72 ▸ 08/77	1334081	**506048**	N	
1900		E	1897	19SH, 19N, 19S	M	Y		01/72 ▸ 08/77	1334081	**506048**	N	
2000		E	1979	20S	M	Y		09/75 ▸ 08/77	1334081	**506048**	N	
2000 D		D	1998	20D	M	Y		08/74 ▸ 08/77	1334087	**506346**	V	
2100 D		D	2068	21D	M	Y		09/72 ▸ 08/77	1334087	**506346**	V	
Rekord E (77>86)												
1800	*EV517*	E	1796	18S	A	Y		08/84 ▸ 09/86	1334013	**506003**	CR	
1800	*662V44, 162/V84, EV516, EV816, EV4 16/17/66/67*	E	1796	18S, 18N, C18NV		Y		10/82 ▸ 09/86	1334013	**506003**	CR	
2.2 i	*EH5/016/017/067/16/17/67*	E	2197	22E	A	Y		08/84 ▸ 09/86	1334097	**506089**	V	
2.2 i	*EH817, EH4/016/16/17/66/67*	E	2197	22E		Y		08/84 ▸ 09/86	1334097	**506089**	V	
Senator A (78>87)												
2.0 i	*AVC429*	E	1979	20E	M	Y		12/82 ▸ 07/84	1334097	**506089**	V	
2.0 i	*AVC502*	E	1979	20E	A	Y		12/82 ▸ 07/84	1334097	**506089**	V	
2.2 i	*AVH/402/429/802/829*	E	2197	22E	M	Y		08/84 ▸ 02/87	1334097	**506089**	V	
2.2 i	*AVH/602/629*	E	2197	22E	A	Y		08/84 ▸ 02/87	1334097	**506089**	V	
2.5 i	*AVJ429*	E	2490	25E	M	Y		06/81 ▸ 02/87	1334081	**506048**	N	
2.5 i	*AVJ629*	E	2490	25E	A	Y		06/81 ▸ 02/87	1334081	**506048**	N	
2.8		E	2784	28H	A	Y		06/78 ▸ 1981	1334081	**506048**	N	
2.8		E	2784	28H		Y		06/78 ▸ 1981	1334081	**506048**	N	
3.0,3.0 i	*AVN/402/429*	E	2968	30E, C30NE	M	Y		06/78 ▸ 02/87	1334081	**506048**	N	
3.0	*AVN/529/602/629*	E	2968	30E	A	Y		06/78 ▸ 02/87	1334081	**506048**	N	
Senator B (87>93)												
2.5 i	*VJ419*	E	2490	25NE	M	Y		02/87 ▸ 08/90	1334021	**506084**	V	
2.5 i	*VJ6/19, VJA/601/619*	E	2490	25NE	A	Y		02/87 ▸ 08/90	1334021	**506084**	V	
2.6 i	*VP19L*	E	2594	C26NE	M	Y		▸ 06/93	1334021	**506084**	V	
1032427 ▸												
2.6 i	*VP19LA*	E	2594	C26NE	A	Y		▸ 06/93	1334021	**506084**	V	
1032427 ▸												
3.0 i,3.0 i 24V	*VN4419, VQ419, VSR419*	E	2968	C30NE, 30NE, C30LE, C30SE	M	Y			1334021	**506084**	V	
1024730 ▸ L199999	*VN4/19*											

• **New** Nouveau **Nuevo** Novo **Nuovo** Nieuw **Neu** Yeni Новый Nou

		Type Ctr.		cc					OE	Valeo		
OPEL (.../...)												
Senator B (87>93) (.../...)												
3.0 i,3.0 i 24V	*VNA619, VO619, VSR619*	E		2968	C30LE, 30NE, C30NE, C30SE	A	Y			1334021	**506084**	V
1039675 ▸ M1000000	*VN6/19*											
Signum												
1.8 i 16V	*ONK48, ONU48*	E		1796	Z18XE	M	Y		06/03 ▸	1334135	**506656**	CR
2.0 i Turbo 16V	*ONP48, ONS48, ONU48, ONK 48*	E		1998	Z20NET	M	Y		06/03 ▸	6334002	**506839**	N
2.2 DIG 16V	*ONP48, ONS48, ONU48, ONK 48*	E		2198	Z22YH	M	Y		06/03 ▸	6334002	**506839**	N
2.2 DIG 16V	*ONP48, ONS48, ONU48, ONK 48*	E		2198	Z22YH	A	Y		06/03 ▸	6334002	**506839**	N
3.2 i V6 24V	*ONP48, ONS48, ONU48, ONK 48*	E		3175	Z32SE	M	Y		06/03 ▸	1334140	**506048**	N
3.2 i V6 24V	*ONP48, ONS48, ONU48, ONK 48*	E		3175	Z32SE	A	Y		06/03 ▸	1334140	**506048**	N
1.9 CDTI 16V		D		1910	Z19DTH	M	Y		04/04 ▸	1334147	**506590**	SS
2.0 DTi 16V	*ONK48, ONU48*	D		1995	Y20DTH	M	Y		06/03 ▸	6334040	**506657**	N
2.2 DTI 16V	*ONP48, ONS48, ONU48, ONK 48*	D		2171	Y22DTR	M	Y		06/03 ▸	6334040	**506657**	N
2.2 DTI 16V	*ONP48, ONS48, ONU48, ONK 48*	D		2171	Y22DTR	A	Y		06/03 ▸	6334040	**506657**	N
3.0 CDTi V6 24V	*ONP48, ONS48, ONU48, ONK 48*	D		2958	Y30DT	M	Y		06/03 ▸	1334144	**506728**	G
3.0 CDTi V6 24V	*ONP48, ONS48, ONU48, ONK 48*	D		2958	Y30DT	A	Y		06/03 ▸	1334144	**506728**	G
Signum B (2005>)												
1.8 i 16V		E		1796	Z18XE	M	Y		10/05 ▸	1334135	**506656**	CR
1.8 i 16V		E		1796	Z18XER	M	Y		10/05 ▸	1334142	**506837**	N
2.0 i Turbo 16V		E		1998	Z20NET	M	Y		10/05 ▸	6334042	**506839**	N
11394430 ▸												
2.2 DIG 16V		E		2198	Z22YH	M	Y		10/05 ▸	6334042	**506839**	N
▸ 11394429												
2.2 DIG 16V		E		2198	Z22YH	A	Y		10/05 ▸	6334042	**506839**	N
▸ 11394429												
2.8 i V6 Turbo 24V		E		2792	Z28NEL	M	Y		10/05 ▸	6334043	**506866**	N
2.8 i V6 Turbo 24V		E		2792	Z28NEL	A	Y		10/05 ▸	6334043	**506866**	N
1.9 CDTI 16V		D		1910	Z19DTH	M	Y		10/05 ▸	1334147	**506590**	SS
1.9 CDTI 16V		D		1910	Z19DTH	A	Y		10/05 ▸	1334147	**506590**	SS
3.0 CDTi V6 24V		D		2958	Z30DT	M	Y		10/05 ▸	1334144	**506728**	G
3.0 CDTi V6 24V		D		2958	Z30DT	A	Y		10/05 ▸	1334144	**506728**	G
Sintra												
2.2 i 16V	*U06A*	E		2198	X22XE	M	Y		03/96 ▸ 12/99	1334053	**506309**	CR
2.2 i 16V	*U06A*	E		2198	X22XE	M	Y		03/96 ▸ 12/99	1334139	**506856**	CR
3.0 i V6 24V	*U06/I8*	E		2962	X30XE	A	Y		03/96 ▸ 12/99	1334131	**506527**	N
Speedster												
2.0 i Turbo 16V		E		1998	Z20LET	M	Y		03/03 ▸ 09/05	1334139	**506856**	CR
2.2 i 16V	*ER97PB*	E		2198	Z22SE	M	Y		08/00 ▸	6334042	**506839**	N
11394430 ▸												
Tigra (94>2003)												
1.4 i 16V	*F07*	E		1389	X14XE	M	Y	23 teeth	10/94 ▸	1334066	**506308**	CR
1.4 i	*F07*	E		1389	C14SE	M	Y		08/97 ▸ 01/01	1334065	**506007**	CR
1.4 i 16V	*F07*	E		1389	X14XE	A	Y	23 teeth	10/94 ▸	1334066	**506308**	CR
1.6 i,1.6 i 16V	*F07*	E		1598	X16XE, C16SEL	M	Y	23 teeth	10/94 ▸	1334066	**506308**	CR
Tigra Twintop (2004>2008)												
1.4 i Twinport 16V		E		1364	Z14XEP	M	Y		07/04 ▸ 07/08	1334145	**506838**	N
1.8 i 16V		E		1796	Z18XE	M	Y		07/04 ▸	1334135	**506656**	CR
1.3 CDTi 16V		D		1248	Z13DT	M	Y		07/04 ▸	6334001	**506716**	vvv

• **New** Nouveau **Nuevo** Novo **Nuovo** Nieuw **Neu** Yeni Новый Nou

Valeo

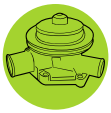

		Type Ctr.		cc					OE	Valeo		
OPEL (.../...)												
Tigra Twintop (2008>)												
1.4 i Twinport 16V		E	1364	Z14XEP	M	Y		07/08 ▸ 08/09	1334145	**506838**	N	
Vectra A (88>95)												
1.4	*JV3/419/468*	E	1389	14NV	M	Y		▸ 07/92	1334065	**506007**	CR	
02J22350 ▸												
1.4	*JV3468*	E	1389	14NV	M	Y		09/88 ▸ 07/92	1334054	**506310**	CR	
1.4	*JV3/419/468*	E	1389	14NV	M	Y		09/88 ▸	1334024	**506030**	CR	
▸ 02J22349												
1.6 S,1.6 i	*JV/, JVQ/419/468, JVR/419*	E	1598	16SV, E16NZ, C16NZ, X16SZ	M	Y		▸ 09/95	1334065	**506007**	CR	
02J22350 ▸	*468, JVU/419/468*											
1.6 S,1.6 i		E	1598	C16NZ2, 16SV	M	Y		09/88 ▸ 09/95	1334054	**506310**	CR	
1.6 S,1.6 i	*JVR619, JV/, JVU/619/668*	E	1598	C16NZ, 16SV, X16SZ	A	Y		▸ 09/95	1334065	**506007**	CR	
02J22350 ▸												
1.6 S,1.6 i		E	1598	C16NZ2, 16SV	A	Y		09/88 ▸ 09/95	1334054	**506310**	CR	
1.6 S,1.6 i	*JVR619, JV/, JVU/619/668*	E	1598	16SV, X16SZ, C16NZ	A	Y		09/88 ▸	1334024	**506030**	CR	
▸ 02J22349												
1.6 S,1.6 i	*JV/, JVQ/419/468, JVR/419*	E	1598	E16NZ, C16NZ, X16SZ, 16SV	M	Y		09/88 ▸	1334024	**506030**	CR	
▸ 02J22349	*468, JVU/419/468*											
1.8,1.8 i	*JVT/419/468*	E	1796	E18NVR, 18SV, C18NZ	M	Y		▸ 09/95	1334054	**506310**	CR	
14270601 ▸												
1.8,1.8 i	*JVT619*	E	1796	18SV, C18NZ, E18NVR	A	Y		▸ 09/95	1334054	**506310**	CR	
14270601 ▸												
1.8,1.8 i	*JVT619*	E	1796	C18NZ, 18SV, E18NVR	A	Y		09/88 ▸	1334008	**506005**	CR	
▸ 14254438												
1.8,1.8 i	*JVT/419/468*	E	1796	C18NZ, 18SV, E18NVR	M	Y		09/88 ▸	1334008	**506005**	CR	
▸ 14270600												
2.0 i,2000 i	*JVB/041/046/419/468*	E	1998	20NE, 20SEH, C20NE, C20NEF	M	Y		▸ 09/95	1334054	**506310**	CR	
14680701 ▸	*JVH319, JVD/041/319/419*											
	468/668/E04/E41, JXK319											
	JVK/319/368											
2.0 i 16V,2000 Turbo 16S	*JVGX21, JV/, JVJ//031/319*	E	1998	X20XEV, C20XE, C20LET	M	Y		▸ 09/95	1334139	**506856**	CR	
2000 i 16V	*JXJ031, JXK319, JVW/031*											
14142839 ▸	*036/041/319/368/468*											
2.0 i 16V,2000 Turbo 16S	*JVG/X21, JVJ/031/319, JVW*	E	1998	C20LET, X20XEV, C20XE	M	Y		▸ 09/95	1334053	**506309**	CR	
14142839 ▸	*031/036/041/319/368/468*											
2.0 i	*JVB/061/066/619/668, JVD/061/066*	E	1998	20SEH, C20NE, C20NEF, 20NE	A	Y		▸ 09/95	1334054	**506310**	CR	
14608701 ▸	*619/668/E06/E61*											
2.0 i 16V	*JVW/061/066*	E	1998	X20XEV	A	Y		09/93 ▸ 09/95	1334053	**506309**	CR	
2.0 i 16V	*JVW/061/066*	E	1998	X20XEV	A	Y		09/93 ▸ 09/95	1334139	**506856**	CR	
2.0 i 16V,2000 i 16V	*JVT319, JVJ//031/319*	E	1998	C20XE, 20XE	M	Y		09/88 ▸	1334038	**506080**	CR	
▸ 14142838	*JXK319, JXJ/031/319*											
2.0 i,2000 i	*JVB/041/046/419/468*	E	1998	20SEH, C20NEF, C20NE, 20NE	M	Y		09/88 ▸	1334008	**506005**	CR	
▸ 14608700	*JVH319, JVD/041/319/419*											
	468/668, JXK319, JVK/319											
	368											
2.0 i	*JVB/061/066/619/668, JVD/061/066*	E	1998	C20NE, C20NEF, 20SEH, 20NE	A	Y		09/88 ▸	1334008	**506005**	CR	
▸ 14608700	*619/668*											
2.5 i V6 24V	*JVX/301/306/319*	E	2498	C25XE	M	Y		05/93 ▸ 09/95	1334140	**506048**	N	
2.5 i V6 24V	*JVX/301/306/319*	E	2498	C25XE	M	Y		05/93 ▸ 09/95	1334131	**506527**	N	
2.5 i V6 24V	*JVX/601/606*	E	2498	C25XE	A	Y		05/93 ▸ 09/95	1334140	**506048**	N	
2.5 i V6 24V	*JVX/601/606*	E	2498	C25XE	A	Y		05/93 ▸ 09/95	1334131	**506527**	N	
1.7 TD	*JV9/406/468*	D	1686	17TD	M	Y		▸ 09/95	1334115	**506481**	N	
877697 ▸												
1.7 TD	*JV9/401/406/419/468*	D	1686	17TD	M	Y		07/91 ▸ 09/95	1334052	**506153**	N	
1.7 D	*JV8/419/468, JVF/419/468*	D	1699	17D, 17DR	M	Y		▸ 09/95	1334053	**506309**	CR	
14363651 ▸												
1.7 D	*JV8/419/468, JVF/419/468*	D	1699	17D, 17DR	M	Y		09/88 ▸	1334014	**506087**	CR	
▸ 14363650												
Vectra B (95>99)												
1.6 i	*F19, F68*	E	1598	16LZ2	M	Y		10/95 ▸ 01/99	1334054	**506310**	CR	
1.6 i	*F19, F68*	E	1598	X16SZR	M	Y		10/95 ▸	1334065	**506007**	CR	
1.6 i 16V		E	1598	X16XEL	M	Y	23 teeth	10/95 ▸	1334066	**506308**	CR	

• **New** Nouveau **Nuevo** Novo **Nuovo** Nieuw **Neu** Yeni Новый Nou

Type Ctr.	E	cc		A	Y		2 3	OE	Valeo		
OPEL (.../...)											
Vectra B (95>99) (.../...)											
1.6 i 16V	E	1598	X16XEL	A	Y	23 teeth	10/95 ▸	1334066	**506308**	CR	
1.8 i 16V *F19, F68*	E	1799	X18XE	M	Y		10/95 ▸ 01/99	1334053	**506309**	CR	
1.8 i 16V *F19, F68*	E	1799	X18XE	M	Y		10/95 ▸ 01/99	1334139	**506856**	CR	
1.8 i 16V	E	1799	X18XE	A	Y		10/96 ▸ 01/99	1334139	**506856**	CR	
1.8 i 16V	E	1799	X18XE	A	Y		10/96 ▸ 01/99	1334053	**506309**	CR	
2.0 i *F19, F68*	E	1998	20NEJ	M	Y		10/95 ▸ 01/99	1334054	**506310**	CR	
2.0 i 16V	E	1998	X20XEV	M	Y		10/95 ▸ 01/99	1334053	**506309**	CR	
2.0 i *F19, F68*	E	1998	20NEJ	A	Y		10/95 ▸ 01/99	1334054	**506310**	CR	
2.0 i 16V	E	1998	X20XEV	A	Y		10/95 ▸ 01/99	1334053	**506309**	CR	
2.5 i V6 24V	E	2498	X25XE-170	M	Y		10/95 ▸ 01/99	1334072	**506048**	N	
2.5 i V6 24V *F68* 2.5 i500 V6 24V	E	2498	X25XE-195, X25XE-170	M	Y		10/95 ▸ 01/99	1334131	**506527**	N	
2.5 i V6 24V	E	2498	X25XE-170	A	Y		10/95 ▸ 01/99	1334072	**506048**	N	
2.5 i V6 24V	E	2498	X25XE-170	A	Y		10/95 ▸ 01/99	1334131	**506527**	N	
1.7 TD	D	1686	X17DT	M	Y		10/95 ▸ 01/99	1334115	**506481**	N	
Vectra B (99>2002)											
1.6 i 16V *0JU/19I/35I/68I*	E	1598	Z16XE	M	Y			6334035	**506703**	CR	
1.6 i 16V *0JU/19I/35I/68I*	E	1598	Z16XE	M	Y	23 teeth	02/99 ▸	1334066	**506308**	CR	
1.6 i 16V *0JU/19I/35I/68I*	E	1598	Z16XE	A	Y			6334035	**506703**	CR	
1.6 i 16V *0JU/19I/35I/68I*	E	1598	Z16XE	A	Y	23 teeth	02/99 ▸	1334066	**506308**	CR	
1.8 i 16V *0JU/19K/35K/68K, 0JX/19K 35K/68K*	E	1796	Z18XE	M	Y		02/99 ▸	1334139	**506856**	CR	
1.8 i 16V *0JU/19K/35K/68K, 0JX/19K 35K/68K*	E	1796	Z18XE	M	Y		02/99 ▸	1334053	**506309**	CR	
1.8 i 16V *0JU/19K/35K/68K, 0JX/19K 35K/68K*	E	1796	Z18XE	A	Y		02/99 ▸	1334139	**506856**	CR	
1.8 i 16V *0JU/19K/35K/68K, 0JX/19K 35K/68K*	E	1796	Z18XE	A	Y		02/99 ▸	1334053	**506309**	CR	
2.2 i 16V *0JU/19P/35P/68P, 0JX/19P 35P/68P*	E	2198	Z22SE	M	Y		02/99 ▸	6334002	**506839**	N	
2.2 i 16V *0JU/19P/35P/68P, 0JX/19P 35P/68P*	E	2198	Z22SE	A	Y		02/99 ▸	6334002	**506839**	N	
2.6 i V6 24V *0JU/19T/35T/68T, 0JX/19T 35T/68T*	E	2597	Y26SE	M	Y		09/00 ▸	1334140	**506048**	N	
2.6 i V6 24V *0JU/19T/35T/68T, 0JX/19T 35T/68T*	E	2597	Y26SE	A	Y		09/00 ▸	1334140	**506048**	N	
2.0 DTi 16V *0JU/19M/35M/68M, 0JX/19M 35M/68M*	D	1995	Y20DTH	M	Y		02/99 ▸	1334072	**506048**	N	
2.0 DTi 16V	D	1995	Y20DTH	M	Y		02/99 ▸ 06/03	6334040	**506657**	N	
2.2 DTI 16V	D	2171	Y22DTR	M	Y		09/00 ▸ 03/02	6334040	**506657**	N	
2.2 DTI 16V *0JU/19P/35P/68P, 0JX/19P 35P/68P*	D	2171	Y22DTR	M	Y		09/00 ▸	1334072	**506048**	N	
Vectra C (2002>2005)											
1.6 i 16V	E	1598	Z16XE	M	Y		04/02 ▸	6334035	**506703**	CR	
1.8 i 16V *JK35*	E	1796	Z18XE	M	Y		07/03 ▸	1334135	**506656**	CR	
1.8 i 16V *JV68KE, JW68KE, OJK69K OJU69K, OJV68, JK3/5KE*	E	1796	Z18XE, Z18XEL	M	Y		04/02 ▸	1334135	**506656**	CR	
2.0 i Turbo 16V *JS35MY, JW68MY*	E	1998	Z20NET	M	Y		03/03 ▸	6334002	**506839**	N	
2.2 DIG 16V,2.2 i 16V *JW68P1, OJK69P, OJU69P JU3/5P3*	E	2198	Z22SE, Z22YH	M	Y			6334002	**506839**	N	
2.2 DIG 16V,2.2 i 16V *JW68P1, OJK69P, OJU69P JU3/5P2*	E	2198	Z22YH, Z22SE	A	Y			6334002	**506839**	N	
3.2 i V6 24V *0JV/35Z/68Z*	E	3175	Z32SE	M	Y		06/02 ▸	1334140	**506048**	N	
3.2 i V6 24V *0JV/35Z/68Z*	E	3175	Z32SE	A	Y		06/02 ▸	1334140	**506048**	N	
1.9 CDTI 16V	D	1910	Z19DTH	M	Y		04/04 ▸	1334147	**506590**	SS	
1.9 CDTI 16V	D	1910	Z19DTH	A	Y		04/04 ▸ 09/05	1334147	**506590**	SS	
2.0 DTi 16V *JK35MV, JV68, OJ, OJK69M OJU69M, JK*	D	1995	Y20DTH	M	Y		04/02 ▸	6334040	**506657**	N	
2.2 DTI 16V *JS35PP, JU35PP, JV68PP JW68PP, OJK69P, OJU69P OJV68, JK3/5PP*	D	2171	Y22DTR	M	Y		04/02 ▸	6334040	**506657**	N	

• **New** Nouveau **Nuevo** Novo **Nuovo** Nieuw **Neu** Yeni Новый Nou

Valeo

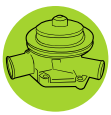

	Type Ctr.		cc					OE	Valeo			
OPEL (.../...)												
Zafira II (2005>) (.../...)												
1.9 CDTI,1.9 CDTI 16V		D	1910	Z19DTH, Z19DT, Z19DTL	M	Y		07/05 ▸	6334003	**506590**	SS	
1.9 CDTI,1.9 CDTI 16V		D	1910	Z19DT, Z19DTH	A	Y		07/05 ▸	6334003	**506590**	SS	
OPEL												
Arena												
1.9 D	*TF1/L, THB/J/L*	D	1870	F8Q.6.00, F8Q.6.06	M	Y		01/98 ▸	4409162	**506019**	N	
2.5 D	*TF1/G/M, THB/G/M*	D	2445	S8U.7.80, S8U.7.82	M	Y		01/98 ▸ 08/01	4404088	**506106**	N	
Campo (88>96)												
2.5 D,2.5 TD	*TFR54, TFS54*	D	2499	25D,25TD	M	Y		10/88 ▸ 06/96	1334113	**506929**	N	
3.1 TD	*TFR69, TFS69*	D	3059	C4JG	M	Y		10/88 ▸ 06/96	1334113	**506929**	N	
Campo (96>)												
2.5 DTI,2.5 TD	*TFR//54H, TFS//54H*	D	2499	4JA-101,4JA1	M	Y		07/96 ▸	1334113	**506929**	N	
3.1 TDS	*TFR69H, TFS69H*	D	3059	4JG2	M	Y		07/96 ▸	1334113	**506929**	N	
Combo (85>93)												
1.3,1.3 i	*PBV//783/983*	E	1297	C13N, 13N, 13S	M	Y		07/85 ▸ 03/93	1334023	**506006**	CR	
1.3		E	1297	13S	A	Y		07/85 ▸ 06/90	1334023	**506006**	CR	
1.4	*PBV382*	E	1389	14NV	M	Y		▸ 06/91	1334065	**506007**	CR	
19307805 ▸												
1.4,1.4 i		E	1389	C14NZ, 14NV	M	Y		09/89 ▸	1334024	**506030**	CR	
▸ 19311737												
1.6,1.6 i		E	1598	C16LZ, E16NZ	M	Y		08/86 ▸	1334024	**506030**	CR	
1.6		E	1598	C16LZ	A	Y		08/86 ▸ 03/93	1334024	**506030**	CR	
1.6 D	*E5T433*	D	1598	16D	M	Y		07/85 ▸ 06/90	1334014	**506087**	CR	
14498631 ▸												
1.7 D	*PBV438, T3448*	D	1699	17D	M	Y		08/90 ▸	1334014	**506087**	CR	
▸ 14363649												
Combo (93>2001)												
1.2,1.2 i		E	1195	X12SZ, C12NZ, 12NZ	M	Y		03/93 ▸ 1998	1334065	**506007**	CR	
X6000001 ▸ W6999999												
1.4 i 16V		E	1389	X14XE	M	Y	23 teeth	08/99 ▸ 09/01	1334066	**506308**	CR	
1.4 i		E	1389	C14SE, C14NZ, X14SZ	M	Y		03/93 ▸ 1998	1334065	**506007**	CR	
X6000001 ▸ W4999999												
1.7 D		D	1686	X17D	M	Y		▸ 09/01	1334115	**506481**	N	
1.7 D		D	1686	X17D	M	Y		07/95 ▸	1334052	**506153**	N	
1.7 D		D	1699	17D	M	Y		03/93 ▸ 09/01	1334052	**506153**	N	
Combo (2001>)												
1.6 GNV		G	1598	Z16YNG	M	Y		04/05 ▸	6334035	**506703**	CR	
1.6 i	*DC25I1, DF25I1*	E	1598	Z16SE/E4	M	y		10/01 ▸ 06/04	6334039	**506785**	CR	
1.3 CDTI 16V		D	1248	Z13DTJ, Z13DT	M	Y		07/04 ▸	6334001	**506716**	vvv	
1.7 CDTI 16V,1.7 DI 16V	*DC2/5JC/5JD, DF2/5JC/5JD*	D	1686	Y17DT, Y17DTL, Z17DTH	M	Y		10/01 ▸	6334019	**506697**	N	
1.7 DTi 16V	*5JK*											
▸ 721438												
Combo FL (2004>)												
1.4 i Twinport 16V	*DF25G0*	E	1364	Z14XEP	M	Y		07/04 ▸	1334145	**506838**	N	
Combo (2011>)												
1.3 CDTI 90 16V		D	1248	A13FD	M	Y		10/11 ▸	1334711	●**506983**	V	
Combo Tour (2002>)												
1.6 i	*DF06I1, DG06I1*	E	1598	Z16SE/E4	M	Y		04/02 ▸ 06/04	6334039	**506785**	CR	
1.3 CDTI 16V	*DF06FB*	D	1248	Z13DT	M	Y		07/04 ▸	6334001	**506716**	vvv	
1.7 CDTI 16V,1.7 DI 16V	*DF0/6JC/6JD/6JK, DG0/6JC*	D	1686	Y17DT, Y17DTL, Z17DTH	M	Y		04/02 ▸	6334019	**506697**	N	
1.7 DTi 16V	*6JD*											
743475 ▸ 1232414												

• **New** Nouveau **Nuevo** Novo **Nuovo** Nieuw **Neu** Yeni Новый Nou

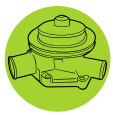

Type Ctr.		CC						OE	Valeo		
OPEL (.../...)											
Combo Tour FL (2004>)											
1.4 i Twinport 16V *DFI06G0*	E	1364	Z14XEP	M	Y		07/04 ▸	1334145	**506838**	N	
Movano											
1.9 Dti *FD, JD*	D	1870	F9Q.7.72	M	Y		08/00 ▸ 07/02	4408028	●**506698**	SS	
1.9 CDTi,1.9 Dti *FD, JD*	D	1870	F9Q.7.70, F9Q.7.72	M	Y		08/00 ▸	4409162	**506019**	N	
2.2 CDTi,2.2 Dti 16V *FD, JD, UD, ED*	D	2188	G9T.7.20, G9T.7.22, G9T.7.50	M	Y		09/00 ▸	4506045	**506709**	N	
2.5 D *FD, JD, ED*	D	2445	S8U.7.72	M	Y		10/98 ▸ 10/01	4501293	**506783**	N	
2.5 CDTi,2.5 CDTi 16V 2.5 Dti 16V *FD, JD, UD, ED*	D	2464	G9U.7.20, G9U.7.54	M	Y		10/01 ▸	4401595	**506709**	N	
2.8 Dti *FD, JD, UD, ED*	D	2800	S9W.7.02, S9W.7.00	M	Y		10/98 ▸ 10/01	4501294	**506784**	N	
Vivaro (2001>2006)											
2.0 i 16V *1F0/5MD, 1G0/3MD/5MD*	E	1998	F4R.7.20	M	Y		05/01 ▸	4408028	●**506698**	SS	
1.9 DI,1.9 DTI *1F0/5LD/5LE, 1G0/3LD/3LE 5LD/5LE*	D	1870	F9Q.7.60, F9Q.7.62	M	Y		05/01 ▸	4408028	●**506698**	SS	
2.5 DTI *1F0/5SA/6SA, 1G0/3SA/5SA 6SA*	D	2464	G9U.7.30	M	Y		05/03 ▸	4401595	**506709**	N	
Vivaro (2006>)											
2.0 i 16V	E	1998	F4R-820	M	Y		07/06 ▸	4408028	●**506698**	SS	
2.0 CDTI	D	1995	M9R.7.80	M	Y		07/06 ▸	4431125	**506902**	N	
2.5 CDTI	D	2464	G9U.6.30	M	Y		07/06 ▸	4401595	**506709**	N	
PEUGEOT											
106 (91>96)											
- *1CZAA0, 1SZAA0*	L	0	SA13	M	Y		07/94 ▸ 03/96	120197	**506290**	CR	
1.0,1.0 i *1AC/1A1/DY1/DY2/DZ1/DZ2 1CC/1A1/1A2/DY1/DY2/DZ1 DZ2, 1SC/1A1/DY1/DZ2*	E	954	TU9M, TU9MPR, TU9	M	Y		09/91 ▸ 03/96	1201E3	**506035**	CR	
1.0,1.0 i *1AC/1A1/DY1/DY2/DZ1/DZ2 1CC/1A1/1A2/DY1/DY2/DZ1 DZ2, 1SC/1A1/DY1/DZ2*	E	954	TU9M, TU9, TU9MPR	M	Y		09/91 ▸ 03/96	1201E4	**506290**	CR	
1.1,1.1 i *1AH/1A1/1A2/3A1/3A2/DY2 DZ1/DZ2, 1CH/1A1/1A2/3A1 DY1/DY2/DZ1/DZ2/DZ8, 1SH 1A1/1A2/3A1/DZ2*	E	1124	TU1M, TU1, TU1TR	M	Y		09/91 ▸ 03/96	1201E3	**506035**	CR	
1.1,1.1 i *1AH/1A1/1A2/3A1/3A2/DY2 DZ1/DZ2, 1CH/1A1/1A2/3A1 DY1/DY2/DZ1/DZ2/DZ8, 1SH 1A1/1A2/3A1/DZ2*	E	1124	TU1M, TU1, TU1TR	M	Y		09/91 ▸ 03/96	1201E4	**506290**	CR	
1.3 i *1CMFZ2*	E	1294	TU2J2	M	Y		06/93 ▸ 03/96	1201E3	**506035**	CR	
1.3 i *1CMFZ2*	E	1294	TU2J2	M	Y		06/93 ▸ 03/96	1201E4	**506290**	CR	
1.4,1.4 i *1AK/2D2/3A2/DX8/DY2, 1CK 2D2/3A2/6B2/DX2/DX8/DY2 FZ2*	E	1360	TU3FMC, TU3M, TU3.2, TU3FJ2 TU3, TU3J2	M	Y		09/91 ▸ 03/96	1201E3	**506035**	CR	
1.4,1.4 i *1AK/2D2/3A2/DX8/DY2, 1CK 2D2/3A2/6B2/DX2/DX8/DY2 FZ2*	E	1360	TU3.2, TU3, TU3FMC, TU3M TU3FJ2, TU3J2	M	Y		09/91 ▸ 03/96	1201E4	**506290**	CR	
1.6 i *1AN/FZ2, 1CN/FY2/FZ2*	E	1587	TU5JP, TU5J2	M	Y		06/93 ▸ 03/96	1201E3	**506035**	CR	
1.6 i *1AN/FZ2, 1CN/FY2/FZ2*	E	1587	TU5J2, TU5JP	M	Y		06/93 ▸ 03/96	1201E4	**506290**	CR	
1.6 i *1ANFZ4, 1CNFZ4*	E	1587	TU5JP	A	Y		06/93 ▸ 03/96	1201E3	**506035**	CR	
1.6 i *1ANFZ4, 1CNFZ4*	E	1587	TU5JP	A	Y		06/93 ▸ 03/96	1201E4	**506290**	CR	
1.4 D *1AK/9B1/9B2/9B9/9Y2, 1CK/9B1/9B2 9Y2, 1SK/9B1/9B2/9B9/9Y2*	D	1360	TUD3	M	Y		06/92 ▸ 03/96	1201E3	**506035**	CR	
1.5 D *1AV/JY2/JZ2, 1SVJY2, 1CV/JY2/JZ2*	D	1527	TUD5	M	Y		07/94 ▸ 03/96	1201E6	**506290**	CR	
106 (96>2003)											
- *1AZAA0, 1CZAA0, 1SZAA0, 1AA/ZA0*	L	0	SA13		Y		03/96 ▸	120197	**506290**	CR	
1.0 i *1AC/DYE/DZD/DZE/DZW, 1CC/DYE/DZD DZE/DZW, 1SC/DZD/DZE*	E	954	TU9M	M	Y		03/96 ▸	1201E3	**506035**	CR	
1.1 i *1CHFXF, 1SHFXF, 1AH/FXF*	E	1124	TU1JP	M	Y			1201G0	**506704**	CR	

• **New** Nouveau **Nuevo** Novo **Nuovo** Nieuw **Neu** Yeni Новый Nou

		Type Ctr.		cc					OE	Valeo		
PEUGEOT (.../...)												
106 (96>2003) (.../...)												
1.1,1.1 i,1.1 i GPL	*1AH/3A2/3A8/DYE/DZD/DZE FXF, 1CH/3A2/DYE/DZD/DZE FXF, 1SH/DZD/DZE/FXF*	E	1124	TU1M+, TU1JP, TU1TR	M	Y		03/96 ▸	1201E3	**506035**	CR	
1.4 i	*1AK/FXS, 1CK/FXD/FXS*	E	1360	TU3JP	M	Y			1201G0	**506704**	CR	
1.4,1.4 i	*1AK/5A2/FWF/FXE/FXS/FXT FXU, 1CK/5A2/FWF/FWU/FXD FXE/FXS/FXT/FXU*	E	1360	TU3JP, TU3.2	M	Y		03/96 ▸	1201E3	**506035**	CR	
1.4 i	*1AKFXL, 1CKFXL*	E	1360	TU3JP	A	Y			1201G0	**506704**	CR	
1.4 i	*1AKFXL, 1CKFXL*	E	1360	TU3JP	A	Y		05/97 ▸	1201E3	**506035**	CR	
1.6 i	*1AN/FZE/FZT, 1CN/FWE/FZE/FZT*	E	1587	TU5JP, TU5J2	M	Y		03/96 ▸	1201E4	**506290**	CR	
1.6 i 16V	*1CN/FX2/FXE/FXF*	E	1587	TU5J4	M	Y		03/96 ▸	1201E5	**506595**	CR	
1.6 i	*1ANFZL, 1CNFZL*	E	1587	TU5JP	A	Y		03/96 ▸	1201E4	**506290**	CR	
1.5 D	*1AV/JUF/JXF/JYE/JYF/JZD/JZE/JZF 1CV/JUF/JXF/JYE/JYF/JZD/JZE/JZF 1SV/JXF/JYE/JZD/JZE*	D	1527	TUD5, TUD5B	M	Y		03/96 ▸	1201E6	**506290**	CR	
107												
1.0 i 12V	*PMCFAC, PNCFAC*	E	998	384F(CFA)	M	Y		06/05 ▸	1201J0	**506852**	SS	
1.4 HDi	*PM8HTC, PN8HTC*	D	1398	DV4TD	M	Y		06/05 ▸	1201G8	**506714**	CR	
204												
1.1	*620.12, 521/.02/.12, 623/.02/.12*	E	1127	XK5	M	Y		09/75 ▸ 06/77	120268	**506108**	N	
1.1	*200/0/1, 201/0/1, 203/0/1, 204/1/6 208/0/1, 209/0/1, 240/0/1, 241/0/1 251/0/1, 2711, 2791, 259/0/1*	E	1130	XK4, XK	M	Y		07/65 ▸ 06/77	120267	**506108**	N	
1.2 D	*2515*	D	1225	XLD	M	Y		09/67 ▸ 06/77	120267	**506108**	N	
1.4 D	*2595, 2795, 521/.52*	D	1357	XLD4	M	Y		03/73 ▸ 06/77	120268	**506108**	N	
205												
1.0,1.0 i	*20A/C11/C12/CD1/CD2 20SC11, 20C/C11/C12/CD1 CD2/N11*	E	954	TU9, TU9M	M	Y		08/87 ▸	1201E4	**506290**	CR	
1.0,1.0 i	*20A/C11/C12/CD1/CD2 20SC11, 20C/C11/C12/CD1 CD2/N11*	E	954	TU9, TU9M	M	Y		08/87 ▸	1201E3	**506035**	CR	
1.1	*20S/E11/E12, 742/A11/A17/C11*	E	1118	E1	M	Y		07/84 ▸ 07/88	120145	**506032**	N	
1.1	*20AF12, 742A27*	E	1124	F1	M	Y		07/84 ▸	120145	**506032**	N	
1.1,1.1 i	*20A/H11/H12/H31/H32/HD2 20C/H11/H12/H31/HD2/M11 20D/H12/HD2, 20S/H11/H12 HD2*	E	1124	TU1, TU1TR, TU1M	M	Y		08/87 ▸	1201E3	**506035**	CR	
1.1,1.1 i	*20A/H11/H12/H31/H32/HD2 20C/H11/H12/H31/HD2/M11 20D/H12/HD2, 20S/H11/H12 HD2*	E	1124	TU1, TU1M, TU1TR	M	Y		08/87 ▸	1201E4	**506290**	CR	
1.3	*20CG12, 20SG12, 20A/G12, 742/A47 C47*	E	1294	G1A, G1	M	Y		07/84 ▸	120145	**506032**	N	
1.3	*20CM22*	E	1294	TU24	M	Y		08/87 ▸	1201E4	**506290**	CR	
1.3	*20CM22*	E	1294	TU24	M	Y		08/87 ▸	1201E3	**506035**	CR	
1.4,1.4 i	*20A/K11/K12/K22/K31/K32 KA2/KD2/KH1, 20C/K12/K22 KA2/KD2, 20D/K12/K22/KA2 KD2, 20S/K11/K12/K31*	E	1360	TU3A1, TU3A, TU3M, TU3, TU3S TU3.2, TU3CP	M	Y		08/87 ▸	1201E4	**506290**	CR	
1.4,1.4 i	*20A/K11/K12/K22/K31/K32 KA2/KD2/KH1, 20C/K12/K22 KA2/KD2, 20D/K12/K22/KA2 KD2, 20S/K11/K12/K31*	E	1360	TU3S, TU3, TU3A, TU3M, TU3.2 TU3A1, TU3CP	M	Y		08/87 ▸	1201E3	**506035**	CR	
1.4	*742/A52/A57*	E	1442	Y2	M	Y		07/84 ▸ 07/87	120145	**506032**	N	
1.6,1.6 i	*20A/BD2/C27, 20C/B62/BD2 20D/B62/BA2/BD2, 741/A27 B66/C27/C66*	E	1580	XU5JA, XU5J1, XU5M, XU51C XU5CP, XU5J	M	Y		02/83 ▸ 01/92	120163	**506011**	CR	
1.6 i	*20A/BD2, 20C/B62/BD2, 20D/B62/BD2*	E	1580	XU5M, XU5JA, XU5J1	M	Y		01/92 ▸	120161	**506029**	CR	

• **New** Nouveau **Nuevo** Novo **Nuovo** Nieuw **Neu** Yeni Новый Nou

Valeo

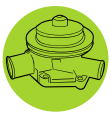

PEUGEOT (.../...)

205 (.../...)

1.6,1.6 i	*20A/B14/BD4, 20C/B14/BD4 741/A28/C28*	E	1580	XU51C, XU5M, XU5CP, XU52C	A	Y		02/83 ▸ 01/92	120163	**506011**	CR	
1.6,1.6 i	*20A/B14/BD4, 20C/B14/BD4*	E	1580	XU52C, XU5M, XU51C	A	Y		01/92 ▸	120161	**506029**	CR	
1.6	*20CJ22, 742C67*	E	1592	J2	M	Y		07/84 ▸ 06/93	120145	**506032**	N	
1.8	*741R76*	E	1775	XU8T		Y		1983 ▸ 07/87	120163	**506011**	CR	
1.9 i	*20C/B62/D62/DF2/DK2, 20D/DF2/HF2 741/B86/C86*	E	1905	XU9JA, XU9J1, XU9JAZ	M	Y		02/83 ▸ 01/92	120163	**506011**	CR	
1.9 i	*20C/B62/D62/DF2/DK2, 20D/DF2/HF2*	E	1905	XU9JA, XU9JAZ	M	Y		06/90 ▸	120161	**506029**	CR	
1.9 i	*20A/DF4, 20C/DF4/DK4, 20D/DF4/DK4*	E	1905	XU9JAZ, XU9JA	A	Y		06/90 ▸ 01/92	120163	**506011**	CR	
1.9 i	*20A/DF4, 20C/DF4/DK4, 20D/DF4/DK4*	E	1905	XU9JAZ, XU9JA	A	Y		01/92 ▸	120161	**506029**	CR	
1.7 D	*741/A90/A98/C90/C98/S90/S98*	D	1769	XUD7	M	Y		08/83 ▸ 10/86	120163	**506011**	CR	
1.7 D,1.7 TD	*20A/A82/A91/A92, 20C/A82 A91/A92, 20TA92, 20S/A82 A91/A92, 741/A90/A98/C90 C98/S90/S98*	D	1769	XUD7, XUD7T	M	Y		10/86 ▸ 10/96	120160	**506014**	CR	
1.7 D,1.7 TD	*20A/A82/A91/A92, 20C/A82 A91/A92, 20TA92, 20S/A82 A91/A92*	D	1769	XUD7, XUD7T	M	Y		01/94 ▸ 01/97	1201A4	**506117**	CR	
1.7 D,1.7 TD 7390 ▸	*20A/A82/A91/A92, 20C/A82 A91/A92, 20TA92, 20S/A82 A91/A92*	D	1769	XUD7, XUD7T	M	Y		01/97 ▸	1201A8	**506574**	CR	
1.9 D	*20CDJ2, 20SDJ2, 20A/DJ2*	D	1905	XUD9	M	Y		08/89 ▸ 01/94	120160	**506014**	CR	
1.9 D	*20CDJ2, 20SDJ2, 20A/DJ2*	D	1905	XUD9	M	Y		01/94 ▸ 01/97	1201A4	**506117**	CR	
1.9 D 7390 ▸	*20CDJ2, 20SDJ2, 20A/DJ2*	D	1905	XUD9	M	Y		01/97 ▸	1201A8	**506574**	CR	

206

1.1 i 3762434 ▸	*2AH/FXF/FYE/FZ2/FZE/FZW, 2EHFXF 2CH/FXF/FYE/FZ2/FZE/FZW, 2SH/FXU FZW*	E	1124	TU1JP	M	Y			1201G0	**506704**	CR	
1.1 i	*2AH/FXF/FYE/FZ2/FZE/FZW, 2EHFXF 2CH/FXF/FYE/FZ2/FZE/FZW, 2SH/FXU FZW*	E	1124	TU1JP	M	Y		09/98 ▸	1201E3	**506035**	CR	
1.4 i	*2AK/6C2/6C8/FWF/FXE/FXW, 2CK/6C2 FWF/FXE/FXW, 2EK/FWA/FWF*	E	1360	TU3JP	M	Y			1201G0	**506704**	CR	
1.4 i 16V	*2CKFUF, 2EKFUF, 2HKFUF 2KKFUF, 2AK/FUF*	E	1360	ET3J4	M	Y		10/03 ▸	1201G2	**506721**	CR	
1.4 i	*2AK/FWR/FX4/FXP, 2CK/FWR/FXP*	E	1360	TU3JP	A	Y			1201G0	**506704**	CR	
1.4 i 3666765 ▸	*2AK/6C2/6C8/FWF/FXE/FXW, 2CK/6C2 FWF/FXE/FXW, 2EK/FWA/FWF*	E	1360	TU3JP	M	Y		09/98 ▸	1201E3	**506035**	CR	
1.4 i 3666765 ▸	*2AK/FWR/FX4/FXP, 2CK/FWR/FXP*	E	1360	TU3JP	A	Y		03/99 ▸	1201E3	**506035**	CR	
1.6 i 16V	*2AN/FUF/FUU, 2DNFUF 2KNFUF, 2CN/FUF/FUU*	E	1587	TU5JP4	M	Y		09/00 ▸	1201E5	**506595**	CR	
1.6 i 16V	*2CNFUR, 2DNFUR, 2KNFUR 2AN/FUR*	E	1587	TU5JP4	A	Y		09/00 ▸	1201E5	**506595**	CR	
1.6 i 8385 ▸	*2AN/FZE/FZW, 2CN/FZE/FZW*	E	1587	TU5JP	M	Y		09/98 ▸	1201E4	**506290**	CR	
1.6 i 8385 ▸	*2ANFZP, 2CNFZP*	E	1587	TU5JP	A	Y		03/99 ▸	1201E4	**506290**	CR	
2.0 i 16V	*2DRFNF, 2ERFNF, 2CR/FKA FNF/FRE*	E	1997	EW10J4,EW10J4S	M	Y	20 teeth	04/99 ▸ 02/09	1201L2	**506918**	CR	
2.0 i 16V 0082890 ▸	*2DRFNF, 2ERFNF, 2CR/FKA FNF/FRE*	E	1997	EW10J4,EW10J4S	M	Y	20 teeth	07/00 ▸	1201J2	**506918**	CR	
1.4 HDi 10160 ▸	*2C8HXF, 2E8HXF, 2S8HXF 2A8/HXF*	D	1398	DV4TD	M	Y		03/02 ▸	1201G8	**506714**	CR	
1.6 HDi 16V 10160 ▸	*2H9HZA, 2J9HZA, 2K9HZA 2D9/HZA*	D	1560	DV6TED4	M	Y		04/04 ▸	1201G9	**506715**	CR	
1.9 D	*2AW/JYF/JZT/JZW, 2CW/JYF/JZT/JZW 2SW/JYU/JZW, 2TW/JYU/JZW*	D	1868	DW8, DW8B	M	Y		09/98 ▸	1201C4	**506575**	CR	

• **New** Nouveau **Nuevo** Novo **Nuovo** Nieuw **Neu** Yeni Новый Nou

		Type Ctr.	cc					OE	Valeo			
PEUGEOT (.../...)												
206 (.../...)												
2.0 HDi	2AR/HYE/HYF/HYU, 2ERHYF 2KRHYF, 2SRHYE, 2CR/HYE HYF/HYU/HYX	D	1997	DW10TD	M	Y		09/99 ▸	1201C4	**506575**	CR	
206+ (2009>)												
1.1 i	2LHFXA, 2MHFXA	E	1124	TU1A	M	Y		03/09 ▸	120145	**506032**	N	
1.4 i	2LKFWA, 2MKFWA	E	1360	TU3A	M	Y		03/09 ▸	120145	**506032**	N	
1.4 HDi	2L8HZA, 2M8HZA	D	1398	DV4TD	M	Y		03/09 ▸	1201G8	**506714**	CR	
207												
1.4 e 16V	WAKFUC, WCKFUC	E	1360	ET3J4	M	Y		03/06 ▸	1201G2	**506721**	CR	
1.4 e	WAKFVC, WCKFVC	E	1360	TU3A	M	Y		03/06 ▸	1201G0	**506704**	CR	
1.4 VTi 16V	WA8/FR0/FSC, WC8/FR0/FSC WU8FR0, WE8/FR0/FSC	E	1397	EP3,EP3C	M	Y		07/07 ▸	1201H8	**506914**	N	
1.6 e 16V	WANFUC, WCNFUC	E	1587	TU5JP4	M	Y		03/06 ▸	1201E5	**506595**	CR	
1.6 e 16V	WAN/FUC/FUF	E	1587	TU5JP4	A	Y		03/06 ▸	1201E5	**506595**	CR	
1.6 THP 16V,1.6 VTi 16V 1.6 e 16V	WA5/FS0/FWC/FXC, WB5/FS0 FWC/FXC, WC5/FS0/FWC/FXC WM5FYC, WE5/FS0/FWC/FYC WU5/FS0/FWC	E	1598	EP6,EP6C,EP6DT,EP6DTS	M	Y		12/06 ▸	1201H8	**506914**	N	
1.6 VTi 16V,1.6 e 16V	WB5FWF, WA5/FWF, WE5FWF WU5FS9, WC5/FS9/FWF	E	1598	EP6,EP6C	A	Y		01/07 ▸	1201H8	**506914**	N	
1.4 HDi	WA8HZC, WC8HZC	D	1399	DV4TD	M	Y		03/06 ▸	1201G8	**506714**	CR	
1.6 HDi 16V	WB9HZC, WA9/HXC/HYC/HZC WC9/HXC/HYC/HZC	D	1560	DV6ATED4, DV6TED4	M	Y		03/06 ▸	1201G9	**506715**	CR	
301												
1.6 VTi 16V	DDNFP0	E	1587	EC5(NFP)	M	Y		11/12 ▸	1201E5	**506595**	CR	
1.6 VTi 16V	DDNFP9	E	1587	EC5(NFP)	A	Y		11/12 ▸	1201E5	**506595**	CR	
304												
1.1	304/D11/T11	E	1127	XK5		Y		09/76 ▸ 09/79	120267	**506108**	N	
1.3	304/A01/A91/B01/B02/C01/C02/D91/M01 M02	E	1288	XL3S, XL3		Y		07/69 ▸ 08/75	120267	**506108**	N	
1.3	304/D01/M01/M02/T01	E	1290	XL5, XL5S		Y		09/70 ▸ 03/80	120267	**506108**	N	
1.4 D	304/D20/M20/T20	D	1357	XL4D		Y		09/76 ▸ 09/79	120267	**506108**	N	
1.6 D	304T30	D	1548	XIDL		Y		09/79 ▸ 03/80	120129	**506108**	N	
305												
1.1	581/AA1/DA1/EA1/MA1	E	1127	XK5	M	Y		11/77 ▸ 02/88	120267	**506108**	N	
1.3	581/A01/D01/E01/M01/T01/U10	E	1290	XL5	M	Y		11/77 ▸ 06/90	120267	**506108**	N	
1.5	581/A11/A12/A21/AC1/D11/E11/E14/M11 U11	E	1472	XR5A, XR5, XR5S	M	Y		11/77 ▸ 06/90	120267	**506108**	N	
1.6	581/E27/E56/M27/M56/U27	E	1580	XU51C, XU5S, XU5CP	M	Y		08/82 ▸ 06/90	120163	**506011**	CR	
1.6	581/E54/M54	E	1580	XU5S	A	Y		08/82 ▸ 06/90	120163	**506011**	CR	
1.9,1.9 i	581/E76/E86/M76/M86	E	1905	XU92C, XU9S, XU9J1	M	Y		08/82 ▸ 06/90	120163	**506011**	CR	
1.9,1.9 i	581/E74/E84/M74/M84	E	1905	XU9J1, XU9S, XU92C	A	Y		08/82 ▸ 06/90	120163	**506011**	CR	
1.5 D	581/A30/AB0/D30/D80/T30	D	1548	X1D	M	Y		11/77 ▸ 07/82	120129	**506108**	N	
1.7 D	581/E68/M68/U60/U68	D	1769	XUD7	M	Y		08/82 ▸ 09/86	120163	**506011**	CR	
1.7 D	581/E68/M68/U60/U68	D	1769	XUD7	M	Y		09/86 ▸ 06/90	120160	**506014**	CR	
1.9 D	581/E40/E48/M40/M48/U40/U48	D	1905	XUD9	M	Y		08/82 ▸ 09/86	120163	**506011**	CR	
1.9 D	581/E40/E48/M40/M48/U40/U48	D	1905	XUD9	M	Y		09/86 ▸ 06/90	120160	**506014**	CR	
306 (93>97)												
1.1 i	7AH/DY2/DZ2, 7CH/DY2/DZ2, 7SH/DY2 DZ2	E	1124	TU1M+, TU1M	M	Y		02/93 ▸ 02/97	1201E3	**506035**	CR	
1.4,1.4 i	7AK/2D2/3A2/DX2/DX9, 7BK 2D2/2D9/3A2/DX2/DX9/FX2 7CK/2D2/DX2/DX9, 7SK/2D2 DX2	E	1360	TU3, TU3MC, TU3.2, TU3JP	M	Y		02/93 ▸ 02/97	1201E3	**506035**	CR	
1.6 i	7AN/FZ2/FZ9, 7BN/FZ2/FZ9, 7DNFZ2 7CN/FZ2/FZ9	E	1587	TU5JP	M	Y		02/93 ▸ 02/97	1201E4	**506290**	CR	

• **New** Nouveau **Nuevo** Novo **Nuovo** Nieuw **Neu** Yeni Новый Nou

Valeo

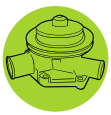

Type Ctr.		CC						OE	Valeo		

PEUGEOT (.../...)

306 (93>97) (.../...)

1.8 i	7AL/6A2/6A9/FZ2/FZ8/FZ9, 7BL/6A2 6A9/FZ2/FZ8/FZ9, 7CL/FZ2/FZ8/FZ9 7DL/6A2/FZ2/FZ8	E	1761	XU7JP	M	Y		02/93 ▸ 02/97	120161	**506029**	CR	
1.8 i	7AL/6A4/FZ4, 7CLFZ4, 7BL/6A4/FZ4 7DL/6A4/FZ4	E	1761	XU7JP	A	Y		06/93 ▸ 02/97	120161	**506029**	CR	
2.0 i,2.0 i 16V	7AR/6D2/FT2/FV2/FX2/FX8 FY2, 7BR/FX2/FX8, 7CR/6D2 FT2/FV2/FX2/FX8/FY2, 7DR 6D2/FX2	E	1998	XU10J4, XU10J4R, XU10J2 XU10J2C	M	Y		06/93 ▸ 02/97	120191	**506117**	CR	
2.0 i 16V	7CRFS2	E	1998	XU10J4RS	M	Y		03/96 ▸ 02/97	1201A1	**506530**	CR	
2.0 i	7BRFX4, 7CRFX4, 7DRFX4, 7AR/FX4	E	1998	XU10J2C, XU10J2	A	Y		09/93 ▸ 02/97	120191	**506117**	CR	
1.8 D	7CA9A2, 7SA9A2, 7AA/9A2	D	1769	XUD7	M	Y		06/93 ▸ 01/94	120160	**506014**	CR	
1.8 D	7CA9A2, 7SA9A2, 7AA/9A2	D	1769	XUD7	M	Y		01/94 ▸ 02/97	1201A4	**506117**	CR	
1.8 D	7CA9A2, 7SA9A2, 7AA/9A2	D	1769	XUD7	M	Y		01/97 ▸ 02/97	1201A8	**506574**	CR	
1.9 D,1.9 TD	7AD/8A2/9B2/HY2/JY2/JZ2 7CD/8A2/9B2/HY2/JY2/JZ2 7SD/9B2/JY2/JZ2	D	1905	XUD9A, XUD9TE, XUD9	M	Y		06/93 ▸ 01/94	120160	**506014**	CR	
1.9 D,1.9 TD	7AD/8A2/9B2/HY2/JY2/JZ2 7BD/8A2/9B2/HY2/JY2, 7CD 8A2/9B2/HY2/JY2/JZ2, 7SD 9B2/JY2/JZ2	D	1905	XUD9A, XUD9, XUD9TE	M	Y		01/94 ▸ 02/97	1201A4	**506117**	CR	
1.9 D,1.9 TD	7AD/8A2/9B2/HY2/JY2/JZ2 7BD/8A2/9B2/HY2/JY2, 7CD 8A2/9B2/HY2/JY2/JZ2, 7SD 9B2/JY2/JZ2	D	1905	XUD9TE, XUD9A, XUD9	M	Y		01/97 ▸ 02/97	1201A8	**506574**	CR	

306 (97>)

1.4,1.4 i,1.4 i GPL	7AK/5A2/FWF/FXE/FXT/FXW 7BK/5A2/FWF/FXE/FXT/FXW 7CK/5A2/FWF/FXE/FXW 7SKFXE, 7EK/5A2/FWF/FXE FXT/FXW	E	1360	TU3JP, TU3.2	M	Y		03/97 ▸ 03/02	1201G0	**506704**	CR	
1.4,1.4 i,1.4 i GPL	7AK/5A2/FWF/FXE/FXT/FXW 7BK/5A2/FWF/FXE/FXT/FXW 7CK/5A2/FWF/FXE/FXW 7SKFXE, 7EK/5A2/FWF/FXE FXT/FXW	E	1360	TU3.2, TU3JP	M	Y		03/97 ▸ 03/02	1201E3	**506035**	CR	
1.6 i	7AN/FTF/FZE/FZW, 7CNFZE, 7BN/FTF FZ8/FZE/FZW, 7DN/FTF/FZE, 7EN/FTF FZE/FZW	E	1587	TU5JP, TU5JP+	M	Y		03/97 ▸ 09/02	1201E4	**506290**	CR	
1.6 i	7BNFTR, 7DNFTR, 7ENFTR, 7AN/FTR	E	1587	TU5JP	A	Y		09/00 ▸ 09/02	1201E4	**506290**	CR	
1.8 i 16V,1.8 i GPL 16V	7AL/FYE/FYF/FYT/FYW, 7BL FYE/FYF/FYT/FYW, 7CL/FYE FYF, 7DL/FYE/FYT, 7EL/FYE FYF/FYT/FYW	E	1761	XU7JP4	M	Y		03/97 ▸ 09/02	120198	**506531**	CR	
1.8 i	7AL/6A2, 7CL6A2, 7DL6A2, 7EL6A2 7BL/6A2/FZW	E	1761	XU7JP	M	Y		03/97 ▸ 09/02	120161	**506029**	CR	
1.8 i	7AL/6A4/FZP, 7CLFZP, 7DLFZP, 7BL 6A4/FZ4/FZP, 7EL/6A4/FZP	E	1761	XU7JP	A	Y		03/97 ▸ 09/02	120161	**506029**	CR	
2.0 i 16V	7BRFVE, 7AR/FVE, 7CR/6E2 FSH/FVE, 7ERFVE, 7DR/6E2 FVE	E	1998	XU10J4R, XU10J4RS	M	Y		03/97 ▸ 09/02	1201A1	**506530**	CR	
2.0 i 16V	7AR/FVP, 7CRFVP, 7BR/FVP FVW, 7DR/FVP/FVW, 7ER/FVP FVW	E	1998	XU10J4R	A	Y		03/97 ▸ 09/02	120193	**506530**	CR	
1.8 D	7CA9AT, 7SA9AE, 7AA/9AT	D	1769	XUD7	M	Y		03/97 ▸ 02/02	1201A8	**506574**	CR	
1.9 D	7AW/JYF/JZT, 7BW/JYF/JZT, 7CW/JYF JZT, 7SWJYF, 7EW/JYF/JZT	D	1868	DW8, DW8B	M	Y		11/98 ▸ 03/02	1201C4	**506575**	CR	
1.9 D,1.9 SD,1.9 TD	7AD/8AD/9BD/HVE/HYE/JYE JYT, 7BD/8AD/9BD/HVE/HYE JYE/JYT, 7CD/HVE/HYE/JYE 7ED/9BD/HVE/HYE/JYE/JYT 7SD/JYE/JYT	D	1905	XUD9BSD, XUD9A, XUD9TE	M	Y		03/97 ▸ 03/02	1201A8	**506574**	CR	

• **New** Nouveau **Nuevo** Novo **Nuovo** Nieuw **Neu** Yeni Новый Nou

PEUGEOT (.../...)

306 (97>) (.../...)

2.0 HDi	7AR/HYE/HYF, 7CRHYE, 7BR HYE/HYF, 7HRHYF, 7ER/HYE HYF	D	1997	DW10TD	M	Y		03/99 ▸ 03/02	1201C4	**506575**	CR	

307 (2005>)

1.4 i 16V	3CKFUC, 3EKFUC, 3AK/FUC	E	1360	ET3J4	M	Y		06/05 ▸	1201G2	**506721**	CR	
1.6 i 16V	3BNFUC, 3CNFUL, 3ENFUC 3HNFUC, 3AN/FUL	E	1587	TU5JP4	M	Y		06/05 ▸	1201E5	**506595**	CR	
1.6 i 16V	3CNFUF, 3ENFUF, 3HNFUF 3AN/FUF	E	1587	TU5JP4	A	Y		06/05 ▸	1201E5	**506595**	CR	
1.6 HDi 16V	3A9/HXC/HYB, 3C9/HXC/HYB 3E9/HXC/HYB, 3H9/HXC/HYB	D	1560	DV6TED4, DV6ATED4	M	Y		06/05 ▸	1201G9	**506715**	CR	
2.0 HDi 16V	3BRHRH, 3CRHRH, 3ERHRH 3HRHRH, 3AR/HRH	D	1997	DW10BTED4	M	Y		06/05 ▸	1201E8	**506719**	CR	

307(2001>2005)

1.4 i ▸ 3666766	3CKFWB, 3EKFWB, 3AK/6DY/FWB	E	1360	TU3JP	M	Y			1201G0	**506704**	CR	
1.4 i 16V	3CKFUB, 3EKFUB, 3AK/FUB	E	1360	ET3J4	M	Y		10/03 ▸	1201G2	**506721**	CR	
1.4 i ▸ 3666765	3CKFWB, 3EKFWB, 3AK/6DY/FWB	E	1360	TU3JP	M	Y		09/01 ▸	1201E3	**506035**	CR	
1.6 i,1.6 i 16V	3AN/6A5/FUB, 3CN/6A5/FUB 3EN/FUB/FUC, 3HN/FUB/FUC	E	1587	TU5JP4	M	Y		03/01 ▸	1201E5	**506595**	CR	
1.6 i 16V	3CNFUE, 3ENFUE, 3AN/FUE 3HN/FUE/FUN	E	1587	TU5JP4	A	Y		03/01 ▸	1201E5	**506595**	CR	
2.0 i 16V	3AR/FN8/FNB, 3BR/FKC/FNC 3CR/FN8/FNB, 3HRFNB, 3ER FNB/FNC	E	1997	EW10J4, EW10J4S	M	Y	20 teeth	03/01 ▸	1201G4	**506918**	CR	506720
2.0 i 16V	3BRFNF, 3CRFNE, 3AR/FNE 3HRFNF, 3ER/FNE/FNF	E	1997	EW10J4	A	Y	20 teeth	03/01 ▸	1201G4	**506918**	CR	506720
2.0 i 16V	3AR/FJC/FN8/FNB, 3BR/FKC FNC, 3CR/FN8/FNB/FNC, 3ER FJC/FNB/FNC, 3HR/FJC/FNB FNC	E	1997	EW10A,EW10J4,EW10J4S	M	Y	20 teeth	03/01 ▸ 06/05	1201K1	**506918**	CR	
2.0 i 16V	3BRFNF, 3AR/FJF/FNE, 3CR FNE/FNF, 3ER/FJF/FNE/FNF 3HR/FJF/FNE/FNF	E	1997	EW10A,EW10J4	A	Y	20 teeth	03/01 ▸ 06/05	1201L2	**506918**	CR	
1.4 HDi	3A8/HZB, 3C8/HZB/HZM	D	1399	DV4TD	M	Y		02/02 ▸	1201G8	**506714**	CR	
1.6 HDi,1.6 HDi 16V	3A9/HXC/HYB/HZB, 3C9/HYB HZB, 3E9/HYB/HZB, 3H9/HYB HZB	D	1560	DV6ATED4,DV6TED4	M	Y		07/04 ▸ 06/05	1201G9	**506715**	CR	
2.0 HDi	3AR/HSB/HYB/HYM, 3CR/HSB HYB/HYM, 3ER/HSB/HYB, 3HR HSB/HYB	D	1997	DW10TD, DW10ATED	M	Y		03/01 ▸	1201C4	**506575**	CR	

308

1.6i 16V	4CNFUC	F	1587	TU5JP4	M	Y		04/10 ▸	1201E5	**506595**	CR	
1.4 VTi 16V	4A8/FSC, 4E8FSC, 4C8/FR0 FSC	E	1397	EP3,EP3C	M	Y		09/07 ▸	1201H8	**506914**	N	
1.6 THP 156 16V 1.6 THP 16V 1.6 VTi 120 16V 1.6 VTi 16V	4A5/FWC/FXC/FXH/FYH, 4B5 FS0/FSC/FV8/FVA/FXH 4E5FWC, 4C5/FV8/FWC/FXC FXH/FYH, 4H5/FV8/FWC/FXH FYH	E	1598	EP6,EP6C,EP6CDT,EP6DT,EP6DTS	M	Y		09/07 ▸	1201H8	**506914**	N	
1.6 THP 156 16V 1.6 THP 16V,1.6 VTi 16V	4A5/FTF/FWF, 4B5/FTF/FVA 4E5FWF, 4C5/FTF/FVA/FWF 4H5/FTF/FVA/FWF	E	1598	EP6,EP6CDT,EP6DT	A	Y		09/07 ▸	1201H8	**506914**	N	
1.6 HDi 16V	4C9/HCZ/HVC/HXC/HZH	D	1560	DV6ATED4, DV6TED4, DV6TED4B	M	Y		09/07 ▸	1201G9	**506715**	CR	
2.0 HDi 16V	4CRHRH	D	1997	DW10BTED4	M	Y		09/07 ▸	1201E8	**506719**	CR	
2.0 HDi 16V	4CRHRJ	D	1997	DW10BTED4	A	Y		09/07 ▸	1201E8	**506719**	CR	

309 (85>89)

1.1	10A/E11/E12, 10C/E11/E12/G10	E	1118	E1	M	Y		09/85 ▸ 06/89	120145	**506032**	N	

• **New** Nouveau **Nuevo** Novo **Nuovo** Nieuw **Neu** Yeni Новый Nou

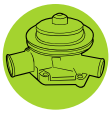

		Type Ctr.		cc					OE	Valeo		
PEUGEOT (.../...)												
309 (85>89) (.../...)												
1.3	10A/G12/G22, 10C/D22/G12/G27, 10S E11/E12/G11/G12	E	1294	G2S, G1A, G2, G1B	M	Y		09/85 ▸ 07/89	120145	**506032**	N	
1.4,1.4 i	10A/K12/K22/KD2, 10C/K12 K22/KD2	E	1360	TU3M, TU3, TU3S	M	Y		08/88 ▸ 07/89	1201E4	**506290**	CR	
1.4,1.4 i	10A/K12/K22/KD2, 10C/K12 K22/KD2	E	1360	TU3, TU3S, TU3M	M	Y		08/88 ▸ 07/89	1201E3	**506035**	CR	
1.5	10AY22	E	1442	Y2	M	Y		08/86 ▸ 06/89	120145	**506032**	N	
1.6,1.6 i	10A/B11/B12/B22/B31/B32 B51/B62/BA2, 10C/B12/B22 B62/BA2/G22	E	1580	XU5CP, XU5J1, XU5JA, XU51C XU52C	M	Y		09/85 ▸ 07/89	120163	**506011**	CR	
1.6	10A/B14/BA4, 10C/B14/BA4	E	1580	XU51C	A	Y		08/85 ▸ 07/89	120163	**506011**	CR	
1.6	10AJZ2	E	1592	J2	M	Y		08/86 ▸ 06/89	120145	**506032**	N	
1.9,1.9 i	10A/D22/D62/DD2/DF2/DK2 10C/B62/D22/D62/DD2/DE2 DF2/DK2	E	1905	XU9JA, XU92C, XU9JAZ, XU9M	M	Y		09/85 ▸ 07/89	120163	**506011**	CR	
1.9 i	10CDF4, 10A/D64/DF4	E	1905	XU9JA	A	Y		08/88 ▸ 07/89	120163	**506011**	CR	
1.7 D	10AA92, 10CA92	D	1769	XUD7	M	Y		08/86 ▸ 10/86	120163	**506011**	CR	
1.7 D	10CA92, 10SA92, 10A/A92	D	1769	XUD7	M	Y		10/86 ▸ 06/89	120160	**506014**	CR	
1.9 D	10CD92, 10SD92, 10A/D92	D	1905	XUD9	M	Y		08/86 ▸ 06/89	120163	**506011**	CR	
1.9 D	10A/D92/DJ2, 10SD92, 10C/D92/DJ2	D	1905	XUD9	M	Y		10/86 ▸ 07/89	120160	**506014**	CR	
309 (89>94)												
1.1	3CB2A2, 3CE1A2, 3SE1A2, 3AE/1A2	E	1118	E1	M	Y		07/89 ▸ 07/92	120145	**506032**	N	
1.1,1.1 i	3AH/1A1/1A2/DZ2, 3CH/1A1 1A2/DZ2, 3SH/1A1/1A2	E	1124	TU1M, TU1	M	Y		08/89 ▸ 08/93	1201E3	**506035**	CR	
1.1,1.1 i	3AH/1A1/1A2/DZ2, 3CH/1A1 1A2/DZ2, 3SH/1A1/1A2	E	1124	TU1, TU1M	M	Y		08/89 ▸ 08/93	1201E4	**506290**	CR	
1.3	3CG1A2, 3SG1A2, 3AG/1A2	E	1294	G1A	M	Y		08/89 ▸ 07/92	120145	**506032**	N	
1.4,1.4 i	3AK/1D2/1G2/2B2/2D2/3A1 3AZ/DY2/DZ2, 3SK1G2, 3CK 1D2/1G2/2B2/2D2/DY2/DZ2	E	1360	TU3M, TU3A, TU3F2, TU3, TU3S	M	Y		08/89 ▸ 08/94	1201E3	**506035**	CR	
1.4,1.4 i	3AK/1D2/1G2/2B2/2D2/3A1 3AZ/DY2/DZ2, 3SK1G2, 3CK 1D2/1G2/2B2/2D2/DY2/DZ2	E	1360	TU3S, TU3A, TU3F2, TU3M, TU3	M	Y		08/89 ▸ 08/94	1201E4	**506290**	CR	
1.5	3AY2A2	E	1442	Y2	M	Y		08/89 ▸ 07/92	120145	**506032**	N	
1.6,1.6 i	3AB/2B2/5A2/6D2/6E2/DY2 DZ2, 3CB/2B2/DY2/DZ2	E	1580	XU52C, XU5M, XU5JA	M	Y		08/89 ▸ 01/92	120163	**506011**	CR	
1.6,1.6 i	3AB/2B2/5A2/6E2/DY2/DZ2 3CB/2B2/DY2/DZ2	E	1580	XU5M, XU52C, XU5JA	M	Y		01/92 ▸ 08/93	120161	**506029**	CR	
1.6,1.6 i	3AB/2B4/DY4, 3CB/2A4/2B4 DY4	E	1580	XU5M, XU52C	A	Y		08/89 ▸ 01/92	120163	**506011**	CR	
1.6,1.6 i	3AB/2B4/DY4, 3CB/2B4/DY4	E	1580	XU5M, XU52C	A	Y		01/92 ▸ 08/93	120161	**506029**	CR	
1.6	3AJ2A2	E	1592	J2	M	Y		08/89 ▸ 07/92	120145	**506032**	N	
1.9,1.9 i,1.9 i 16V	3AD/2A2/2H2/6B2/DZ2/KZ2 3CD/2H2/6B2/6C2/DZ2/FW2 KZ2	E	1905	XU92C, XU9M, XU9JA, XU9J4 XU9JAZ	M	Y		08/89 ▸ 08/93	120161	**506029**	CR	
1.9,1.9 i	3AD/2A2/2H2/6B2/DZ2/KZ2 3CD/2A2/2H2/6B2/DZ2/KZ2	E	1905	XU9JA, XU9M, XU9JAZ, XU92C	M	Y		08/89 ▸ 08/93	120163	**506011**	CR	
1.9 i	3AD/FZ4/KZ4, 3CD/FZ4/KZ4	E	1905	XU9J1, XU9JAZ	A	Y		08/90 ▸ 01/92	120163	**506011**	CR	
1.9 i	3AD/FZ4/KZ4, 3CD/FZ4/KZ4	E	1905	XU9J1, XU9JAZ	A	Y		01/92 ▸ 08/93	120161	**506029**	CR	
1.7 D,1.7 TD	3AA/8B2/9A2/9A9, 3SA9A2 3CA/8B2/9A2/9A9	D	1769	XUD7, XUD7T	M	Y		08/89 ▸ 08/94	120160	**506014**	CR	
1.9 D	3AD/9A2/JZ2, 3SD9A2, 3CD/9A2/JZ2	D	1905	XUD9	M	Y		08/89 ▸ 08/93	120160	**506014**	CR	
404												
1.5	U6, U8	E	1468	XB2,XB5	M	Y		06/62 ▸ 07/70	120179	**●506245**	N	
1.6,1.6 i	U6A, U6E, U7, U8A, U10	E	1618	KF2,XC,XC5,XC6-C,XC6-I,XC7	M	Y		04/62 ▸ 05/79	120179	**●506245**	N	
1.6		E	1618	XC5,XC6-C,XC7	A	Y		04/62 ▸ 03/75	120179	**●506245**	N	
1.8	U6S	E	1796	XMU6S	M	Y		01/70 ▸ 10/70	120179	**●506245**	N	
1.8 D	U6D	D	1816	XD85	M	Y		06/62 ▸ 06/63	120179	**●506245**	N	
405 (87>92)												
1.4 GPL	15BK11	G	1360	TU3-G	M	Y		06/87 ▸ 06/91	1201E3	**506035**	CR	

• **New** Nouveau **Nuevo** Novo **Nuovo** Nieuw **Neu** Yeni Новый Nou

PEUGEOT (.../...)

405 (87>92) (.../...)

1.4	*15B/K11/K12/K31/K32*	E	1360	TU3A, TU3&3A, TU3	M	Y		06/87 ▸ 06/92	1201E3	**506035**	CR	
1.4	*15B/K21/K22*	E	1360	TU3.2	M	Y		07/91 ▸ 06/92	1201E4	**506290**	CR	
1.6,1.6 i	*15B/8A2/B12/B22/B32/B52 BD2, 15SB22, 15E/B12/B22 B32/B52/BD2*	E	1580	XU52C, XU51C, XU5CP, XU5M	M	Y		06/87 ▸ 12/91	120163	**506011**	CR	
1.6,1.6 i	*15B/B24/BD4, 15E/B24/BD4*	E	1580	XU52C, XU5M	A	Y		06/88 ▸ 12/91	120163	**506011**	CR	
1.6,1.6 i ▸ 70521453	*15B/B22/B52/BD2, 15SB22 15E/B12/B22/B52/BD2*	E	1580	XU52C, XU5M, XU51C	M	Y		01/92 ▸ 06/92	120161	**506029**	CR	
1.6,1.6 i ▸ 70521453	*15B/B24/BD4, 15E/B24/BD4*	E	1580	XU52C, XU5M	A	Y		01/92 ▸ 06/92	120161	**506029**	CR	
1.9,1.9 i	*15B/D22/D27/D52/D62/DD2 DD7/DF2/DK2, 15E/D22/D27 D52/D62/DD2/DD7/DF2/DK2*	E	1905	XU92C, XU9J2, XU9M, XU9JAZ XU9J1	M	Y		06/87 ▸ 12/91	120163	**506011**	CR	
1.9,1.9 i	*15B/D24/D54/D64/DF4/DK4 15E/D24/D54/D64/DD2/DF4 DK4*	E	1905	XU92C, XU9J1A, XU9J2, XU9JAZ XU9M, XU9J1	A	Y		06/87 ▸ 12/91	120163	**506011**	CR	
1.9,1.9 i,1.9 i 16V ▸ 70521453	*15B/D22/D27/D52/D62/D67 DD2/DD7/DF2/DF7/DK2, 15E D22/D27/D52/D62/DD2/DD7 DF7*	E	1905	XU9J2, XU92C, XU9J4, XU9M XU9JAZ	M	Y		06/87 ▸ 06/92	120161	**506029**	CR	
1.9,1.9 i ▸ 70521453	*15B/D24/D64/DF4/DK4, 15E D24/D64/DD2/DF4*	E	1905	XU9J1A, XU9J2, XU9JAZ, XU9M XU92C	A	Y		01/92 ▸ 06/92	120161	**506029**	CR	
1.7 D,1.7 TD	*15B/A82/A92/AJ2, 15SA92 15E/A82/A92/AJ2*	D	1769	XUD7TE, XUD7	M	Y		06/87 ▸ 06/92	120160	**506014**	CR	
1.9 D	*15B/D92/DJ2, 15SD92, 15E/D92/DJ2*	D	1905	XUD9A	M	Y		06/87 ▸ 06/92	120160	**506014**	CR	

405 (92>96)

1.4,1.4 i	*4BK/2D2/DX2, 4EK/2D2/DX2*	E	1360	TU3M, TU3MC, TU3.2	M	Y		07/92 ▸ 10/96	1201E4	**506290**	CR	
1.6,1.6 i	*4BB/2A2/5A2/DY2/FZ2, 4EB 2A2/5A2/DY2/FZ2, 4SB/2A2 DY2/FZ2*	E	1580	XU5M, XU52C, XU5JP	M	Y		07/92 ▸ 10/96	120161	**506029**	CR	
1.6,1.6 i	*4BB/2A4/DY4/FZ4, 4EB/2A4 DY4/FZ4*	E	1580	XU5M, XU5JP, XU52C	A	Y		07/92 ▸ 10/96	120161	**506029**	CR	
1.8 i	*4BL/6A2/FZ2, 4EL/6A2/FZ2*	E	1761	XU7JP, XU7JPPR	M	Y		07/92 ▸ 10/96	120161	**506029**	CR	
1.8 i	*4BLFZ4, 4ELFZ4*	E	1761	XU7JP	A	Y		07/92 ▸ 10/96	120161	**506029**	CR	
1.9,1.9 i	*4BD/2H2/2H6/2H8/5A2/6D2 4ED/2H2/2H8/5A2/6D2*	E	1905	XU92C, XU9J2	M	Y		07/92 ▸ 10/96	120161	**506029**	CR	
1.9,1.9 i	*4ED2H4, 4BD/2H4/5A4/6D4*	E	1905	XU92C, XU9J2	A	Y		07/92 ▸ 10/96	120161	**506029**	CR	
2.0 i,2.0 i Turbo 16S	*4BR/FX2/FX7/FY2/GZ7, 4ER 6D2/FX2/FX7*	E	1998	XU10J2, XU10J2C, XU10J4 XU10J4TE	M	Y		07/92 ▸ 10/96	120191	**506117**	CR	
2.0 i	*4BR/FX4, 4ER/6D4/FX4*	E	1998	XU10J2, XU10J2C	A	Y		07/92 ▸ 10/96	120191	**506117**	CR	
1.7 TD	*15BA82*	D	1769	XUD7TE	M	Y		07/93 ▸ 01/94	120160	**506014**	CR	
1.7 TD	*15BA82*	D	1769	XUD7TE	M	Y		01/94 ▸ 10/95	1201A4	**506117**	CR	
1.9 D,1.9 TD	*4BD/8A2/9B2/HY2/JZ2 4SD9B2, 4ED/8A2/9B2/HY2 JY2/JZ2*	D	1905	XUD9A, XUD9TE	M	Y		07/92 ▸ 01/96	120160	**506014**	CR	
1.9 D,1.9 TD	*4BD/8A2/9B2/HY2/JZ2 4SD9B2, 4ED/8A2/9B2/HY2 JY2/JZ2*	D	1905	XUD9TE, XUD9A	M	Y		01/94 ▸ 10/96	1201A4	**506117**	CR	

406 (95>99)

1.6 i	*8BB/FZ2/FZD/FZE*	E	1580	XU5JP	M	Y		10/95 ▸ 03/99	120161	**506029**	CR	
1.8 i 16V,1.8 i GPL 16V	*8CLFYE, 8BL/FY2/FY8/FYD FYE/FYS/FYT/FYW, 8EL/FYE FYT/FYW, 8FL/FYE/FYT*	E	1761	XU7JP4	M	Y		10/95 ▸ 03/99	120198	**506531**	CR	
1.8 i	*8BL/6A2/FXE, 8FLFXE, 8EL/6A2/FXE*	E	1761	XU7JB,XU7JP	M	Y		10/95 ▸ 03/99	120161	**506029**	CR	
1.8 i 16V	*8ELFYP, 8FLFYP, 8BL/FYP*	E	1761	XU7JP4	A	Y		07/96 ▸ 03/99	120198	**506531**	CR	
2.0 i 16V	*8BR/6E2/FV2/FVD/FVE/FVW 8CR/FV2/FVE, 8FRFVE, 8ER 6E2/FVE/FVW*	E	1998	XU10J4R	M	Y		10/95 ▸ 03/99	120193	**506530**	CR	
2.0 i Turbo	*8ERGXE, 8BR/GX2/GXE*	E	1998	XU10J2TE	M	Y		07/96 ▸ 03/99	120191	**506117**	CR	

• **New** Nouveau **Nuevo** Novo **Nuovo** Nieuw **Neu** Yeni Новый Nou

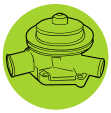

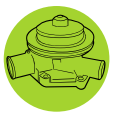

Valeo

Water pump
Pompe à eau
Bomba de água
Bomba de água
Pompa acqua
Waterpomp

Wasserpumpen
Pompa wodna
Vízpumpa
Su pompasi
ВОДЯНОЙ НАСОС

Vodní pumpa
Pompa de apă

		Type Ctr.		cc						OE	Valeo		
PEUGEOT (.../...)													
407 (.../...)													
2.0 i 16V	6DR/FJF/FNE, 6ER/FJF/FNE	E	1997	EW10A,EW10J4	A	Y	20 teeth	04/04 ▸		1201J2	**506918**	CR	
2.2 i 16V	6D3FZH	E	2230	EW12J4	M	Y	20 teeth	04/04 ▸		1201F5	**506918**	CR	
2.2 i 16V	6D3FZF, 6E3FZF	E	2230	EW12J4	A	Y	20 teeth	04/04 ▸		1201G5	**506918**	CR	
1.6 HDi 16V ▸ 10160	6D9/HYC/HZC, 6E9/HYC/HZC	D	1560	DV6TED4	M	Y		04/04 ▸		1201G9	**506715**	CR	
2.0 HDi 16V	6DRHRH, 6ERHRH	D	1997	DW10BTED4	M	Y		04/04 ▸		1201E8	**506719**	CR	
2.0 HDi 16V	6DR/HRE/HRJ, 6ER/HRE/HRJ	D	1997	DW10BTED4	A	Y		04/04 ▸		1201E8	**506719**	CR	
2.2 HDi 16V	6D4/HPH/HTH, 6E4/HPH/HTH	D	2179	DW12BTED4	M	Y		06/06 ▸		1201J6	●**506978**	CR	
2.2 HDi 16V ▸ 11109	6D4/HPH/HTH, 6E4/HPH/HTH	D	2179	DW12BTED4	M	Y		06/06 ▸ 04/07		1201H7	●**506978**	CR	
2.7 HDi V6 24V	6EUHZJ, 6JUHZJ, 6DU/HZJ	D	2720	DT17BTED4	A	Y		10/05 ▸		1201G6	**506952**	N	
504													
1.6	504/M71/U01/V01	E	1618	XC7	M	Y		08/79 ▸ 07/85		120189	**506122**	N	
1.6	504/M71/U01/V01	E	1618	XC7	M	Y		08/79 ▸ 07/85		120179	●**506245**	N	
1.8,1.8 i	504/A01/A02/B02/C02/E01 EA1/F01/F81/M01/M51/V51 V57	E	1796	XM7, KF5, XM	M	Y		06/68 ▸ 09/93		120189	**506122**	N	
1.8	504/A03/E03/M03/M53	E	1796	XM, XM7	A	Y		12/68 ▸ 07/85		120189	**506122**	N	
1.8,1.8 i	504/A01/A02/B02/C02/E01 EA1/F01/F81/M01/M51/V51 V57	E	1796	KF5,XM,XM7	M	Y		06/68 ▸ 09/93		120179	●**506245**	N	
1.8	504/A03/E03/M03/M53	E	1796	XM,XM7	A	Y		12/68 ▸ 07/85		120179	●**506245**	N	
2.0,2.0 i	504/A11/A12/B12/C12/D11 F11/H11/MA1/MY1/V11	E	1971	XN2, XN1, XNA	M	Y		09/69 ▸ 07/85		120189	**506122**	N	
2.0,2.0 i	504/A13/A14/B14/C14/D13 F13/H13/MA3/MY3	E	1971	XN1, XN2, XNA	A	Y		09/69 ▸ 07/85		120189	**506122**	N	
2.0,2.0 i	504/A11/A12/B12/C12/D11 F11/H11/MA1/MY1/V11	E	1971	XN1,XN2,XNA	M	Y		09/69 ▸ 07/85		120179	●**506245**	N	
2.0,2.0 i	504/A13/A14/B14/C14/D13 F13/H13/MA3/MY3	E	1971	XN1,XN2,XNA	A	Y		09/69 ▸ 07/85		120179	●**506245**	N	
1.9 D	504/E20/F80/K40/M20/U20/V20	D	1948	XD88	M	Y		08/70 ▸ 07/85		120286	**506247**	N	
2.1 D	504/A20/D20/D80/E20/F20/F80/H20/M20 V60/V20	D	2112	XD90, XD4	M	Y		09/69 ▸ 07/85		120286	**506247**	N	
2.3 D	504/A40/D40/F20/F40/H40/M40/R48/V40 V48	D	2304	XD2	M	Y		08/71 ▸		120183	**506230**	CR	
2.3 D	504/A45/F45/M45	D	2304	XD2	A	Y		07/75 ▸ 07/83		120183	**506230**	CR	
2.5 D	504V58	D	2498	XD3	M	Y		08/85 ▸ 09/93		120183	**506230**	CR	
505													
1.6	551AT1	E	1618	XC7	M	Y		08/83 ▸ 07/84		120189	**506122**	N	
1.8	551/A01/A71/A77/D01/D71/D77/F01/F71 F77/FC2	E	1796	XM7, XM7A	M	Y		08/80 ▸		120189	**506122**	N	
1.8	551/A03/A73/F73	E	1796	XM7, XM7A	A	Y		05/79 ▸		120189	**506122**	N	
2.0	551/A11/A17/D11/D17/DG1/F11/F17/FB1 G11/G17/H11/H17/S11/S17	E	1971	XN1A, XN1	M	Y		05/79 ▸		120189	**506122**	N	
2.0 i	551AF6	E	1971	XN6	M	Y		08/83 ▸ 07/85		120171	**506170**	N	
2.0	551/A13/A18/D13/D18/F13/F18	E	1971	XN1, XN1A	A	Y		05/79 ▸		120189	**506122**	N	
2.0 i	551/AF4/FF4	E	1971	XN6	A	Y		08/82 ▸ 07/88		120171	**506170**	N	
2.0 i	551/A12/A16/D16/F16/FD1	E	1995	ZEJ, ZEJK	M	Y		05/79 ▸		120185	**506259**	N	
2.0 i	551/A12/A16/D16/F16/FD1	E	1995	ZEJK, ZEJ	M	Y		05/79 ▸		120186	**506035**	CR	
2.0 i	551/A14/A19	E	1995	ZEJK, ZEJ	A	Y		05/79 ▸ 1989		120186	**506035**	CR	
2.0 i	551/A14/A19	E	1995	ZEJ, ZEJK	A	Y		05/79 ▸ 1989		120185	**506259**	N	
2.2 i	551/A36/A86/D86/F86, BD815, BF327 BF816, BA8/15/16	E	2165	ZDJL, ZDJK	M	Y		08/81 ▸		120186	**506035**	CR	
2.2 i	551/A86/D86/F86	E	2165	ZDJL	M	Y		08/83 ▸		120185	**506259**	N	
2.2 i	551/A34/A84/A89/D89/F89, BD81E BF81F, CF221, CF327, BA8/1E/2F/2R	E	2165	ZDJL, ZDJK	A	Y		08/81 ▸		120185	**506259**	N	
2.2 i	551/A84/A89/D89/F89	E	2165	ZDJL	A	Y		08/83 ▸		120186	**506035**	CR	
2.3 TD ▸ 1633872	551A46	D	2304	XD2S	M	Y		▸ 07/85		120176	**506088**	N	
2.3 D	551/A40/A48/D40/D48/F40/S40/S48	D	2304	XD2	M	Y		08/79 ▸ 07/85		120183	**506230**	CR	
2.3 TD ▸ 1633872	551A44	D	2304	XD2S	A	Y		▸ 07/85		120176	**506088**	N	

• **New** Nouveau **Nuevo** Novo **Nuovo** Nieuw **Neu** Yeni Новый Nou

Valeo

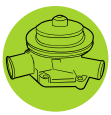

		Type Ctr.		cc					OE	Valeo		
PEUGEOT (.../...)												
505 (.../...)												
2.3 D	*551A45*	D		2304	XD2	A	Y		08/79 ▸ 07/84	120183	**506230**	CR	
2.5 D	*551/A50/A53/A58/D50/D57/D58/DH8/F50 F58/G58/H58/S50/S58*	D		2498	XD3	M	Y		08/79 ▸	120174	**506170**	N	
2.5 TD	*551A56*	D		2498	XD3T, XD3TE	M	Y		08/83 ▸ 1990	120176	**506088**	N	
2.5 D	*551/A55/A57/D55/F55/F57*	D		2498	XD3	A	Y		08/81 ▸	120174	**506170**	N	
2.5 TD	*551/A54/A59/D53/D59/F59*	D		2498	XD3T, XD3TE	A	Y		08/83 ▸	120176	**506088**	N	
508												
2.2 HDi 204 16V	*8D4HLA, 8E4HLA*	D		2179	DW12C	A	Y		03/11 ▸	1201J6	●**506978**	CR	
604												
2.0 i	*604A18*	E		1971	XN6	M	Y		07/82 ▸ 1984	120171	**506170**	N	
2.5 TD	*604A56*	D		2498	XD3T	M	Y		09/83 ▸ 12/86	120176	**506088**	N	
2.5 TD	*604A55*	D		2498	XD3T	A	Y		09/83 ▸ 12/86	120176	**506088**	N	
605 (89>94)												
2.0,2.0 i,2.0 i Turbo	*6BR/2A2/2A8/5A2/6A2/6A8 DZ2/FZ2/FZ8/FZ9/GY2*	E		1998	XU102C, XU10J2, XU10M XU10J2TE, XU102C TR	M	Y		10/89 ▸ 06/94	120191	**506117**	CR	
2.0 i,2.0 i Turbo	*6BR/6A4/FZ4/GY4*	E		1998	XU10J2, XU10J2TE	A	Y		04/90 ▸ 06/94	120191	**506117**	CR	
2.1 TD Turbo	*6BP/8A2/8B2/8C2/HZ2*	D		2088	XUD11ATE, XUD11BTE	M	Y		04/90 ▸ 06/94	1201E0	**506291**	CR	
2.1 TD Turbo	*6BP/8A4/8C4/HZ4*	D		2088	XUD11ATE, XUD11BTE	A	Y		04/90 ▸ 06/94	1201E0	**506291**	CR	
2.1 D	*6BP/9A2/JZ2*	D		2138	XUD11A	M	Y		09/90 ▸ 06/94	120191	**506117**	CR	
605 (94>99)												
2.0 i 16V	*6BR/6E2/FV2/FV9/FVE*	E		1998	XU10J4R	M	Y		07/94 ▸ 05/99	120193	**506530**	CR	
2.0,2.0 i,2.0 i Turbo	*6BR/5A2/6A8/GX2/GXE*	E		1998	XU10J2, XU102C TR, XU10J2CTE XU10J2CTEL3	M	Y		07/94 ▸ 05/99	120191	**506117**	CR	
2.0 i 16V	*6BR/6E4/FV4/FVP*	E		1998	XU10J4R	A	Y		07/94 ▸ 05/99	120193	**506530**	CR	
2.0 i,2.0 i Turbo	*6BR/6A4/GX4/GXP*	E		1998	XU10J2CTE, XU10J2 XU10J2CTEL3	A	Y		07/94 ▸ 05/99	120191	**506117**	CR	
3.0 i V6 24V	*6BX/FZ2/FZE*	E		2946	ES9J4	M	Y		06/97 ▸ 05/99	1201C7	**506643**	CR	
3.0 i V6 24V	*6BXFZP*	E		2946	ES9J4	A	Y		06/97 ▸ 05/99	1201C7	**506643**	CR	
2.1 TD Turbo	*6BP/8B2/8C2/8CE/HZ2*	D		2088	XUD11ATE, XUD11BTE	M	Y		07/94 ▸ 05/99	1201E0	**506291**	CR	
2.1 TD Turbo	*6BP/8B4/8CP/HZ4*	D		2088	XUD11ATE, XUD11BTE	A	Y		07/94 ▸ 05/99	1201E0	**506291**	CR	
2.5 TD	*6BT/HY2/HYE*	D		2446	DK5ATE	M	Y		07/94 ▸ 05/96	1201A3	**506582**	vvv	
607 (2000>2004)												
2.0 i 16V	*9DR/FN5/FNB/FNC*	E		1997	EW10J4	M	Y	20 teeth	05/00 ▸	1201G4	**506918**	CR	506720
2.0 i 16V	*9DR/FN5/FNB/FNC*	E		1997	EW10J4	M	Y	20 teeth	05/00 ▸	1201F4	**506918**	CR	
2.2 i 16V	*9D3/FZB/FZC*	E		2230	EW12J4	M	Y	20 teeth	05/00 ▸	1201J2	**506918**	CR	
2.2 i 16V	*9D3/FZ2/FZ6/FZE/FZF*	E		2230	EW12J4	A	Y	20 teeth	05/00 ▸ 09/04	1201K1	**506918**	CR	
3.0 i V6 24V	*9DXFXE*	E		2946	ES9J4S	A	Y	20 teeth	07/03 ▸ 09/04	1201L2	**506918**	CR	
2.0 HDi	*9DR/HSB/HZB*	D		1997	DW10ATED	M	Y		05/00 ▸	1201C4	**506575**	CR	
2.2 HDi 16V	*9D4/HXB/HXG*	D		2179	DW12TED4	M	Y		05/00 ▸	1201E8	**506719**	CR	
2.2 HDi 16V	*9D4HXE*	D		2179	DW12TED4	A	Y		09/00 ▸	1201E8	**506719**	CR	
607 (2004>)												
2.2 i 16V	*9U3FZC*	E		2230	EW12J4	M	Y	20 teeth	10/04 ▸	1201G5	**506918**	CR	
2.0 HDi	*9URHSB*	D		1997	DW10ATED	M	Y		10/04 ▸	1201C4	**506575**	CR	
2.0 HDi 16V	*9URHRH*	D		1997	DW10BTED4	M	Y		01/06 ▸	1201E8	**506719**	CR	
2.2 HDi 16V	*9U4HXG*	D		2179	DW12TED4	M	Y		10/04 ▸	1201E8	**506719**	CR	
2.2 HDi 16V	*9U4HXE*	D		2179	DW12TED4	A	Y		10/04 ▸	1201E8	**506719**	CR	
2.2 HDi 16V	*9U4HTH*	D		2179	DW12BTED4	M	Y		10/04 ▸	1201H7	●**506978**	CR	
2.2 HDi 16V	*9U4HTH*	D		2179	DW12BTED4	M	Y		06/06 ▸ 07/07	1201J6	●**506978**	CR	
2.7 HDi 24V	*9UUHZJ*	D		2720	DT17BTED4	A	Y		10/04 ▸	1201G6	**506952**	N	
806 (94>98)												
1.8 i	*221LA2*	E		1761	XU7JP	M	Y		06/95 ▸ 09/98	120161	**506029**	CR	
2.0 i,2.0 i Turbo	*221/RA2/RB2/RB9*	E		1998	XU10J2C, XU10J2CTEL3 XU10J2CTE	M	Y		07/94 ▸ 09/98	120191	**506117**	CR	
1.9 TD 7390 ▸	*221/DA2/DC2/DH2*	D		1905	XUD9BTF, XUD9TE	M	Y		02/97 ▸ 09/98	1201A8	**506574**	CR	
1.9 TD 6993 ▸ 7389	*221/DA2/DC2/DH2*	D		1905	XUD9TE, XUD9TEF, XUD9BTF	M	Y		08/94 ▸ 01/97	1201A4	**506117**	CR	

• **New** Nouveau **Nuevo** Novo **Nuovo** Nieuw **Neu** Yeni Новый Nou

PEUGEOT (.../...)

806 (94>98) (.../...)

2.1 TD	*221PA2*	D	2088	XUD11BTE	M	Y		06/96 ▸ 09/98	1201C6	**506291**	CR	

806 (98>2002)

1.8 i	*221LA2*	E	1761	XU7JP	M	Y		10/98 ▸ 05/02	120161	**506029**	CR	
2.0 i 16V	*AFRFNC*	E	1997	EW10J4	M	Y	20 teeth	07/00 ▸ 05/02	1201G4	**506918**	CR	506720
2.0 i 16V	*AFRFNF*	E	1997	EW10J4	A	Y	20 teeth	07/00 ▸ 05/02	1201G4	**506918**	CR	506720
2.0 i 16V	*AFRFNC*	E	1997	EW10J4	M	Y	20 teeth	07/00 ▸ 05/02	1201J2	**506918**	CR	
2.0 i 16V	*AFRFNF*	E	1997	EW10J4	A	Y	20 teeth	07/00 ▸ 05/02	1201L2	**506918**	CR	
2.0 i 16V	*AFRFVB*	E	1998	XU10J4R	M	Y		10/98 ▸ 05/02	120193	**506530**	CR	
2.0 i,2.0 i Turbo CT	*221/RA2/RB2*	E	1998	XU10J2C, XU10J2CTEL3	M	Y		10/98 ▸ 05/02	120191	**506117**	CR	
1.9 TD	*221DH2*	D	1905	XUD9BTF	M	Y		10/98 ▸ 05/02	120191	**506117**	CR	
1.9 TD	*221DH2*	D	1905	XUD9BTF	M	Y		10/98 ▸ 05/02	1201A8	**506574**	CR	
2.0 HDi,2.0 HDi 16V	*AFR/HWB/HZA*	D	1997	DW10ATED, DW10ATED4	M	Y		08/99 ▸ 05/02	1201C4	**506575**	CR	
2.1 TD	*221PA2*	D	2088	XUD11BTE	M	Y		10/98 ▸ 05/02	1201C6	**506291**	CR	

807

2.0 i 16V	*EAR/FNC, EBR/FJC/FNC*	E	1997	EW10J4, EW10A	M	Y	20 teeth	06/02 ▸	1201J1	**506918**	CR	506720
2.0 i 16V	*EBR/FJF/FNF*	E	1997	EW10J4, EW10A	A	Y	20 teeth	06/02 ▸	1201J1	**506918**	CR	506720
2.0 i 16V	*EAR/FJC/FNC, EBR/FJC/FNC*	E	1997	EW10A,EW10J4	M	Y	20 teeth	06/02 ▸	1201L2	**506918**	CR	
2.0 i 16V	*EAR/FNE, EBR/FJF/FNE/FNF*	E	1997	EW10A,EW10J4	A	Y	20 teeth	06/02 ▸	1201K1	**506918**	CR	
2.2 i 16V ▸ 9826	*EA3FZC, EB3FZC*	E	2230	EW12J4	M	Y	20 teeth	06/02 ▸ 09/05	1201J2	**506918**	CR	
2.0 HDi 16V	*EARHTB, EBRHTB*	D	1997	DW10ATED4	M	Y		06/02 ▸ 05/06	1201C4	**506575**	CR	
2.0 HDi 16V	*EBR/HKH/HRH*	D	1997	DW10BTED4, DW10UTED4	M	Y		04/06 ▸	1201E8	**506719**	CR	
2.0 HDi 16V	*EAR/HME, EBR/HME/HWB*	D	1997	DW10ATED4	A	Y		03/03 ▸	1201C4	**506575**	CR	
2.2 HDi 16V	*EA4/HWB/HWG, EB4/HWB/HWG*	D	2179	DW12TED4	M	Y		06/02 ▸ 06/06	1201E8	**506719**	CR	
2.2 HDi 16V	*EB4HTH*	D	2179	DW12BTED4	M	Y		12/07 ▸	1201J6	●**506978**	CR	
2.2 HDi 16V	*EB4HSJ*	D	2179	DW12BTED4	A	Y		12/07 ▸	1201J6	●**506978**	CR	

1007

1.4 i	*KMKFVB*	E	1360	TU3JP, TU3A	M	Y		04/05 ▸	1201G0	**506704**	CR	
1.4 i 16V	*KMKFUC*	E	1360	ET3J4	M	Y		01/06 ▸	1201G2	**506721**	CR	
1.6 i 16V	*KMNFUC*	E	1587	TU5JP4	M	Y		04/05 ▸	1201E5	**506595**	CR	
1.4 HDi	*KM8HXB*	D	1398	DV4TD	M	Y		09/05 ▸	1201G8	**506714**	CR	
1.4 HDi	*KM8HZB*	D	1399	DV4TD	M	Y		04/05 ▸	1201G8	**506714**	CR	
1.6 HDi 16V	*KM9HZC*	D	1560	DV6TED4	M	Y		02/07 ▸	1201G9	**506715**	CR	

3008

1.6 THP 150 16V 1.6 THP 156 16V 1.6 VTi 120 16V	*0U5/FS0/FS8/FV8/FW0/FXH*	E	1598	EP6,EP6C,EP6CDT,EP6DT	M	Y		09/09 ▸	1201H8	**506914**	N	
1.6 THP 156 16V	*0U5FVA*	E	1598	EP6CDT	A	Y		01/10 ▸	1201H8	**506914**	N	
1.6 HDi 110 16V	*0U9HZH*	D	1560	DV6TED4	M	Y		09/09 ▸	1201G9	**506715**	CR	
2.0 HDi 163 16V	*0URHHA*	D	1997	DW10CTED4	A	Y	20 teeth	09/09 ▸	1201K1	**506918**	CR	

4007

2.0 i 16V		E	1998	4B11MMC	M	Y		01/11 ▸	1201K4	▲**526006**	N	
2.4 i 16V	*VUSFZC, VVSFZC*	E	2360	4B12MMC	M	Y		01/08 ▸	1201K4	▲**526006**	N	
2.4 i 16V	*VUSFZF, VVSFZF*	E	2360	4B12MMC	A	Y		01/08 ▸ 05/08	1201J9	▲**526006**	N	
2.2 HDi 16V	*VU4/HK8/HNH, VV4/HK8/HNH*	D	2179	DW12ME5,DW12MTED4	M	Y		07/07 ▸	1201J6	●**506978**	CR	
2.2 HDi 16V	*VV4HNH*	D	2179	DW12MTED4	M	Y		07/07 ▸	1201H7	●**506978**	CR	

4008

2.0 i 16V	*BUAF*	E	1998	4B11MMC	M	Y		03/12 ▸	1201K4	▲**526006**	N	
2.0 i 16V	*BUAF*	E	1998	4B11MMC	A	Y		03/12 ▸	1201K4	▲**526006**	N	

5008

1.6 THP 156 16V 1.6 VTi 120 16V	*0A5/FS0/FV8/FW0, 0E5/FV8 FW0*	E	1598	EP6,EP6C,EP6CDT	M	Y		09/09 ▸	1201H8	**506914**	N	
1.6 THP 156 16V	*0A5FVA*	E	1598	EP6CDT	A	Y		04/10 ▸	1201H8	**506914**	N	
1.6 HDi 110 16V	*0A9HZH, 0E9HZH*	D	1560	DV6TED4	M	Y		09/09 ▸	1201G9	**506715**	CR	

RCZ

1.6 THP 156 16V 1.6 THP 200 16V	*4J5/FU8/FV8*	E	1598	EP6CDT,EP6CDTX	M	Y		05/10 ▸	1201H8	**506914**	N	

• **New** Nouveau **Nuevo** Novo **Nuovo** Nieuw **Neu** Yeni Новый Nou

Valeo

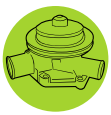

PEUGEOT (.../...)

RCZ (.../...)

1.6 THP 156 16V	*4J5FV8*	E	1598	EP6CDT	A	Y		05/10 ▸	1201H8	**506914**	N	

PEUGEOT

Bipper

1.4 i	*AAKFVC*	E	1360	TU3A	M	Y		12/07 ▸	1201G0	**506704**	CR	
1.3 HDi	*AJFHZ0, AAF/HZ/HZ*	D	1248	F13DTE5	M	Y		09/10 ▸	1201L9	●**506983**	V	
1.4 HDi	*AA8HSC*	D	1398	DV4TED	M	Y		12/07 ▸	1201G8	**506714**	CR	

Boxer (94>2001)

2.0,2.0 i	*231/A22/A24/A34/B12/B22 B24/C22/C24/G22/H22/V22 V24, 232/B22/B24/G22/H22 J12/J22/K22/L22/V22/V24 233/B22/G22/H22/J22/K22 L22*	E	1998	XU10J2U, XU102CU	M	Y		02/94 ▸	120191	**506117**	CR	
1.9 D,1.9 TD	*232B72, 231/A32/A62/A72 A82/B72/B82/C72*	D	1905	XUD9A, XUD9UTF, XUD9TEF	M	Y		02/94 ▸ 02/97	1201A4	**506117**	CR	
1.9 D,1.9 TD	*231/A32/A62/A72/A82/B72 B82/C32/C62/C72/C82/V82 232/B72/B82*	D	1905	XUD9A, XUD9UTF, XUD9TEF XUD9AU	M	Y		02/97 ▸	1201A8	**506574**	CR	
2.0 HDi	*231/AJ2/VJ2*	D	1997	DW10TD	M	Y		09/01 ▸	1201C4	**506575**	CR	
2.5 D,2.5 TD	*231/B02/B59/B92/C02/V52 232/B02/B52/B92/G52/H52 H92/J02/J52/J92/K52/L52 L92/V52, 233/J52/J92, 234 G52/K52*	D	2446	DJ5, DJ5T	M	Y		02/94 ▸ 06/96	1201A3	**506582**	vvv	
2.5 D,2.5 TD,2.5 TDi	*231/A52/B02/B42/B44/B52 B54/B59/B92/B94/C02/C42 C44/J42/J52/V42/V52/V94 232/B02/B42/B44/B52/B54 B92/B94/G52/H52/H92/J02 J42/J44/J52/J54/J92/J94 K52/K54/L52/L54/L92/V44 V52/V94, 233/B42/B52/J42 J44/J52/J92, 234/G52/K52*	D	2446	DJ5, DJ5TED, DJ5T	M	Y		05/96 ▸	1201A5	**506596**	vvv	
2.5 D	*232V52, 231/G52/H52, 233/B52/G52 H52/J52/J54/K52/K54/L52/L54*	D	2446	DJ5	M	Y		09/98 ▸ 12/01	1201H5	**506514**	N	
2.8 D,2.8 HDi,2.8 TD	*231/AL2/B52/BL2/BL4/CH2 CL2/GH2/GL2/HL2/JL2/VH2 VL2, 232/BH2/BL2/BL4/GH2 GL2/GL4/HL2/HL4/JH2/JL2 JL4/KH2/KL2/KL4/LL2/LL4 VH2/VL2, 233/BL2/GH2/GL2 HL2/JH2/JL2/JL4/KH2/KL2 KL4/LL2/LL4, 234/GH2/GL2 KH2/KL2*	D	2798	8140-43S, 8140-43, 8140-63	M	Y		06/99 ▸	1201H5	**506514**	N	

Boxer (2002>2006)

2.0 i	*ZAT/MF, ZBT/MF/MP, ZCT/MF/MM*	E	1998	XU10J2U	M	Y		01/02 ▸ 06/06	120191	**506117**	CR	
2.0 HDi	*ZAA/MF/MP, ZBA/MD/MF/MP*	D	1997	DW10UTD	M	Y		01/02 ▸ 06/06	1201C4	**506575**	CR	
2.2 HDi	*ZAR/MF/MP, ZBR/MD/MF/MH MP, ZCR/MD/MF/MH/MM*	D	2179	DW12TED	M	Y		01/02 ▸ 06/06	1201E8	**506719**	CR	
2.8 HDi	*ZAP/MF/MP, ZBP/MD/MF/MH MP/WF/WN, ZBZ/MA/MD/MF/MG MH/MN, ZCP/MD/MF/MH/MM/WA WC/WD/WN, ZCZ/MA/MC/MD/MF MG/MH/MN*	D	2798	F28TDCR	M	Y		01/02 ▸ 06/06	1201H5	**506514**	N	
2.8 HDi	*ZAP/AP, ZCPAF, ZBP/AF/AP*	D	2798	F28TDCR	A	Y		01/03 ▸ 06/06	1201H5	**506514**	N	

Boxer (2006>)

3.0 HDi 16V	*YCDMF, YBD/MD/MF/MFB*	D	2999	F30DT	M	Y		07/06 ▸	1201J4	●**506961**	V	

• **New** Nouveau **Nuevo** Novo **Nuovo** Nieuw **Neu** Yeni Новый Nou

PEUGEOT (.../...)

Expert (95>2003)

1.6 i	224AA2, 223AA2, 222AA2	E	1581	160A	M	Y		09/95 ▸ 12/03	120195	**506669**	vvv	
1.6 i	222AA2, 224AA2, 223AA2	E	1581	160A	M	Y		09/95 ▸ 12/03	120196	**506670**	vvv	
1.8 i	222/LA9/LB9, 224/LA9/LB9	E	1761	XU7JP	M	Y		07/96 ▸	120161	**506029**	CR	
2.0 i 16V	BDRFNC, BZRFNC, BAR/FNC	E	1997	EW10J4	M	Y	20 teeth	09/00 ▸	1201G4	**506918**	CR	506720
2.0 i 16V	BARFNF, BDRFNF	E	1997	EW10J4	A	Y	20 teeth	01/01 ▸	1201G4	**506918**	CR	506720
2.0 i 16V	BDRFNC, BZRFNC, BAR/FNC	E	1997	EW10J4	M	Y	20 teeth	09/00 ▸ 12/03	1201L2	**506918**	CR	
2.0 i 16V	BARFNF, BDRFNF	E	1997	EW10J4	A	Y	20 teeth	01/01 ▸ 12/03	1201K1	**506918**	CR	
1.9 D	BBWJZA, BAW/JZA, BEWJZA, BDW/JYB JZA, BTW/JYB/JZA, BZW/JYB/JZA	D	1868	DW8, DW8B	M	Y		05/98 ▸	1201C4	**506575**	CR	
1.9 D,1.9 TD	222/DA2/DB2, 223/DA2/DB2	D	1905	XUD9TEF, XUD9A, XUD9BTF	M	Y		01/97 ▸	1201A8	**506574**	CR	
07390 ▸	DH2, 225DA2, 226DA2, 224 DA2/DB2/DH2											
1.9 D,1.9 TD	222/DA2/DB2, 223/DA2/DB2	D	1905	XUD9A, XUD9TEF	M	Y		09/95 ▸	1201A4	**506117**	CR	
▸ 06992	224/DA2/DB2											
2.0 HDi,2.0 HDi 16V	BCRHZB, BAR/HWB/HZB BERHZB, BHRHZB, BDR/HXA HXB/HZA/HZB, BTRHWB BURHZB, BWRHZB, BSR/HXA HXB/HZB, BYR/HXA/HXB/HZB BZR/HWB/HXA/HXB	D	1997	DW10BTED, DW10CTED, DW10ATED4 DW10ATED	M	Y		09/00 ▸	1201C4	**506575**	CR	

Expert (2004>2006)

2.0 i 16V	BERFNC, BXRFNC, BZRFNC BBR/FNC	E	1997	EW10J4	M	Y	20 teeth	01/04 ▸	1201G4	**506918**	CR	506720
2.0 i 16V	BBRFNF, BERFNF	E	1997	EW10J4	A	Y	20 teeth	01/04 ▸	1201G4	**506918**	CR	506720
1.9 D	BVWJYB, BXWJYB, BZWJYB, BTW/JYB	D	1868	DW8B	M	Y		01/04 ▸	1201C4	**506575**	CR	
2.0 HDi,2.0 HDi 16V	BBR/HXB/HZB, BER/HXB/HZB BTRHWB, BURHZB, BVRHWB BSR/HXB/HZB, BXRHWB, BWR HXB/HZB, BYR/HXB/HZB, BZR HWB/HXB	D	1997	DW10BTED, DW10BTED+L4 DW10ATED4	M	Y		01/04 ▸	1201C4	**506575**	CR	

Expert (2007>)

2.0 i 16V	XERFJC	E	1997	EW10A	M	Y	20 teeth	03/07 ▸	1201J1	**506918**	CR	506720
1.6 HDi 16V	XC9HUC, XS9HUC, XT9HUC XU9HUC, XV9HUC, XW9HUC XA9/HUC	D	1560	DV6UTED4	M	Y		01/07 ▸	1201G9	**506715**	CR	
2.0 HDi 16V	XAR/HKH/HRH, XCR/HKH/HRH XSRHKH, XDR/HKH/HRH XURHKH, XVRHKH, XWRHKH XTR/HKH/HRH	D	1997	DW10BTED4, DW10UTED4	M	Y		01/07 ▸	1201E8	**506719**	CR	

J5

1.8 GPL	280A11	G	1796	XM7T-G	M	Y		11/81 ▸ 08/90	120140	**506292**	N	
2.0	28G224, 280/B22/G22	G	1971	XN1T-G	M	Y		11/81 ▸ 08/90	120140	**506292**	N	
1.8	280/A11/C11, 290/A11/C11	E	1796	XM7T3, XM7T	M	Y		11/81 ▸ 02/94	120140	**506292**	N	
2.0	280/B22/C22/D22/G22/H22/J32/K32 290/A42/B22/B42/B44/C22/C42/C44 D42/G22/G42/G44/J32/K32/K42	E	1971	XN1T, XN1TA	M	Y		11/81 ▸ 02/94	120140	**506292**	N	
1.9 D	280/B62/C82, 290/A62/B62/C02/G62 M62/R62	D	1905	XUD9A	M	Y		07/87 ▸ 02/94	120160	**506014**	CR	
2.5 D,2.5 TD	280/A51/B52/B92/C51/C52 C92/C94/D52/G52/G92/H52 H92/J52/J92/K92/L92/X54 28B/52D/92D, 2G921D, 290 B52/B54/B92/B94/C52/C54 C92/C94/G52/G54/G92/G94 J52/J92/K52/K92	D	2500	CRD93LS, CRD93L, CRD93(651) CRD93(661)	M	Y		11/81 ▸ 02/94	120137	**506178**	V+V	

J7

2.3 D	J7P/W60/W65/X60/X63/X64/Y60/Y66/Y67 Y68/Z60/Z61/Z62	D	2304	XD2P94		Y		07/77 ▸ 01/80	120184	**506274**	N	

• **New** Nouveau **Nuevo** Novo **Nuovo** Nieuw **Neu** Yeni Новый Nou

Valeo

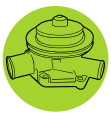

PEUGEOT (.../...)

J9

2.3 D	888/A70/A71/A73/A75/A79/B71/C70/C73 C76/C79/D73/D75/D79	D	2304	XD2P	M	Y		01/80 ▸ 07/82	120184	**506274**	N	

Partner (2002>)

1.4 GNV,1.4 GPL	GCKFWB, GJKFWB, GBK/FWB FWC	G	1360	TU3JP	M	Y		04/03 ▸	1201G0	**506704**	CR	
1.1 i	GBHFXB	E	1124	TU1JP	M	Y		11/02 ▸	1201G0	**506704**	CR	
1.4 i	GBK/FVC/FWB, GJK/FVC/FWB	E	1360	TU3JP, TU3A	M	Y		11/02 ▸	1201G0	**506704**	CR	
1.6 i 16V	GCNFUB, GJNFUB, GBN/FUB	E	1587	TU5JP4	M	Y		11/02 ▸	1201E5	**506595**	CR	
1.6 HDi 16V	GB9/HWC/HXC, GC9/HWC/HXC GJ9/HWC/HXC	D	1560	DV6BTED4, DV6ATED4	M	Y		01/06 ▸	1201G9	**506715**	CR	
1.9 D	GCW,JYB, GEW,JYB, GJW,JYB, GBW/JYB	D	1868	DW8B	M	Y		11/02 ▸	1201C4	**506575**	CR	
2.0 HDi	GCRHYB, GERHYB, GBR/HYB GJR/HY/HYK	D	1997	DW10TD	M	Y		11/02 ▸	1201C4	**506575**	CR	

Partner (2008>)

1.6 i 16V	7BNFRC, 7CNFRC, 7AN/FRC 7JN/FRC/FUC	E	1587	TU5JP4,TU5JP4B	M	Y		05/08 ▸	1201E5	**506595**	CR	
1.6 i 16V	7J5FS0	E	1598	EP6C	M	Y		11/09 ▸	1201H8	**506914**	N	
1.6 HDi 16V	7A9/HTC/HVC/HXC, 7B9/HTC HXC, 7E9HXC, 7F9HXC 7G9HXC, 7C9/HTC/HXC 7M9HXC, 7J9/HTC/HVC/HXC HZC	D	1560	DV6ATED4,DV6AUTED4,DV6BTED4 DV6BUTED4,DV6TED4,DV6TED4B DV6TED4BU	M	Y		05/08 ▸	1201G9	**506715**	CR	

Partner (96>2002)

1.1 i	5AHFXF, 5BHFXF	E	1124	TU1JP	M	Y		▸ 11/02	1201G0	**506704**	CR	
1.1 i,1.1 i GPL	5AH/DZA/DZE/FXF, 5DHDZE 5BH/DZD/DZE/FXF, 5FH/DZD DZE	E	1124	TU1M+, TU1JP	M	Y		06/96 ▸	1201E3	**506035**	CR	
1.4 i,1.4 i GPL ▸ 3666766	5BK/6C2/FXD/FXE, 5CK/FXD FXE, 5FK/6C2/FWF/FXD/FXE	E	1360	TU3JP	M	Y		▸ 11/02	1201G0	**506704**	CR	
1.4,1.4 i,1.4 i GPL ▸ 3666765	5BK/5A2/5AG/6C2/FXD/FXE 5EK5AG, 5CK/FXD/FXE, 5FK 5A2/5AG/6C2/FWF/FXD/FXE FXF	E	1360	TU3JP, TU3.2	M	Y		06/96 ▸	1201E3	**506035**	CR	
1.6 i 16V	5FN/FUF/FUU	E	1587	TU5JP4	M	Y		▸ 11/02	1201G0	**506704**	CR	
1.6 i 16V	5FN/FUF/FUU	E	1587	TU5JP4	M	Y		09/00 ▸ 11/02	1201E5	**506595**	CR	
1.8 i	5FLFXE	E	1761	XU7JB	M	Y		05/97 ▸ 11/02	120161	**506029**	CR	
1.8 D ▸ 07390	5CA9AD, 5FA9AD, 5BA/9A2/9AD/9AG	D	1769	XUD7	M	Y		02/97 ▸ 11/02	1201A8	**506574**	CR	
1.8 D ▸ 07389	5CA9AD, 5FA9AD, 5BA/9A2/9AD/9AG	D	1769	XUD7	M	Y		06/96 ▸ 01/97	1201A4	**506117**	CR	
1.9 D	5BW/JYF/JZE/JZT, 5CW/JYF/JZE, 5FW JYF/JZE	D	1868	DW8, DW8B	M	Y		10/98 ▸ 11/02	1201C4	**506575**	CR	
1.9 D ▸ 07390	5CD9BD, 5DD9BD, 5BD/9BD/JYE, 5FD 9BD/JYE	D	1905	XUD9A	M	Y		02/97 ▸ 11/02	1201A8	**506574**	CR	
1.9 D ▸ 07389	5CD9BD, 5BD/9BD/JYE, 5FD/9BD/JYE	D	1905	XUD9A	M	Y		06/96 ▸ 01/97	1201A4	**506117**	CR	
2.0 HDi	5BR/HYE/HYF, 5CR/HYE/HYF 5FR/HYE/HYF/HYU	D	1997	DW10TD	M	Y		05/00 ▸ 11/02	1201C4	**506575**	CR	

Ranch (2002>)

1.4 i	GBKFWB	E	1360	TU3JP	M	Y		11/02 ▸	1201G0	**506704**	CR	
1.9 D	GBW,JYB, GCW,JYB	D	1868	DW8B	M	Y		11/02 ▸	1201C4	**506575**	CR	
2.0 HDi	GBRHYB, GCRHYB	D	1997	DW10TD	M	Y		11/02 ▸	1201C4	**506575**	CR	

Ranch (96>2002)

1.4 i	5BK/FXD, 5FK/FWF/FXE	E	1360	TU3JP	M	Y		06/96 ▸	1201E3	**506035**	CR	
1.8 i	5FLFXE	E	1761	XU7JB	M	Y		07/97 ▸	120161	**506029**	CR	
1.8 D ▸ 7390	5BA9AD	D	1769	XUD7	M	Y		02/97 ▸	1201A8	**506574**	CR	
1.8 D ▸ 7389	5BA9AD	D	1769	XUD7	M	Y		06/96 ▸ 01/97	1201A4	**506117**	CR	

• **New** Nouveau **Nuevo** Novo **Nuovo** Nieuw **Neu** Yeni Новый Nou

		Type Ctr.		cc						OE	Valeo		
PEUGEOT (.../...)													
Ranch (96>2002) (.../...)													
1.9 D	*5CWJZE, 5FWJZE, 5BW/JYF/JZE*	D	1868	DW8, DW8B	M	Y		11/98 ▸	1201C4	**506575**	CR	
1.9 D 7390 ▸	*5CD9BD, 5FDJYE, 5BD/9BD*	D	1905	XUD9A	M	Y		02/97 ▸	1201A8	**506574**	CR	
1.9 D ▸ 7389	*5CD9BD, 5FDJYE, 5BD/9BD*	D	1905	XUD9A	M	Y		06/96 ▸ 01/97	1201A4	**506117**	CR	
2.0 HDi	*5BRHYF, 5CRHYF*	D	1997	DW10TD	M	Y		01/01 ▸ 11/02	1201C4	**506575**	CR	
PORSCHE													
924													
2.0,2.0 Turbo	*924T5, 92410, 924GT*	E	1984	M31.03, 047.8, M31.50, M31.01	M	Y		01/76 ▸ 06/83	060121011	**506186**	N	
PROTON													
300													
1.3 i	*C96MNJ*	E	1299	4G13	M	Y		08/96 ▸	MD974649	**506406**	N	
1.5 i	*C97MNJ*	E	1468	4G15	M	Y		08/96 ▸	MD974649	**506406**	N	
1.5 i	*C97MKJ*	E	1468	4G15	A	Y		08/96 ▸	MD974649	**506406**	N	
400													
1.3 i	*C96SNJ, C96LNJ*	E	1299	4G13	M	Y		12/95 ▸	MD974649	**506406**	N	
1.5 i	*C97SNJ, C97LNJ*	E	1468	4G15P	M	Y		11/93 ▸	MD974649	**506406**	N	
1.5 i	*C97LKJ, C97SKJ*	E	1468	4G15P	A	Y		11/93 ▸	MD974649	**506406**	N	
2.0 D,2.0 TD	*C95SNJ, C95SNH, C95LNH C95LNJ*	D	1998	4D68-0E6, 4D68-3A0	M	Y		12/95 ▸	MD972054	**506857**	N	
RENAULT													
R4													
1.1 GPL	*R112, R237, 210/B*	G	1108	688	M	Y		09/75 ▸	7701457671	**506059**	N	
1.1 GPL	*R210*	G	1108	688		Y		09/82 ▸	7701457671	**506059**	N	
0.7	*R112*	E	747	680	M	Y		07/61 ▸ 06/71	7701461173	**506341**	SS	
0.7	*R112*	E	747	680		Y		07/61 ▸ 06/62	7701461173	**506341**	SS	
0.8	*R210, R239, R11/2*	E	782	839	M	Y		07/71 ▸ 06/82	7701461173	**506341**	SS	
0.8	*R210, R239, R11/2*	E	845	B1B, 800	M	Y		09/62 ▸ 06/86	7701461173	**506341**	SS	
1.0	*R112*	E	956	C1C	M	Y		07/86 ▸ 1990	7701463014	**506473**	N	
1.0	*R112*	E	956	C1C		Y		07/86 ▸	7701463014	**506473**	N	
1.1	*R112, R210, 3C2/3, R243, R23/7/9*	E	1108	688, C1E	M	Y		07/75 ▸	7701457671	**506059**	N	
1.1	*R112*	E	1108	C1E	M	Y		07/84 ▸	7701463014	**506473**	N	
1.1	*R210*	E	1108	C1E		Y		09/82 ▸	7701457671	**506059**	N	
R5													
0.8	*R122*	E	782	839	M	Y		01/72 ▸ 06/81	7701461174	**506337**	N	
0.9	*R122, R238, 139/1*	E	845	800	M	Y		07/72 ▸ 06/85	7701461174	**506337**	N	
1.0	*R122, R238, 139/2*	E	956	689	M	Y		01/72 ▸ 06/85	7701457671	**506059**	N	
1.1	*1397, 2387, 122/7*	E	1108	688, C1E	M	Y		07/79 ▸ 06/85	7701457671	**506059**	N	
1.3	*R122, 139/4/5/6*	E	1289	810	M	Y		07/73 ▸ 06/85	7701457671	**506059**	N	
1.3	*1395, R122*	E	1289	810	A	Y		07/75 ▸ 06/85	7701460696	**506328**	N	
1.4,1.4 Turbo	*1399, R122, 122/9/B*	E	1397	C2J, C6J, 840	M	Y		07/75 ▸ 06/85	7701457671	**506059**	N	
1.4	*1229, 1399*	E	1397	C2J	M	Y		07/79 ▸ 06/85	7701462419	**506347**	V	506022
1.4	*1229, 1399*	E	1397	847	A	Y		07/80 ▸ 06/85	7701460696	**506328**	N	
1.4	*1229, 1399*	E	1397	847	A	Y		07/80 ▸ 06/85	7701462419	**506347**	V	506022
Super 5													
0.9	*C400, S400, B40/0*	E	956	C1C	M	Y		06/84 ▸ 12/92	7701466419	**506347**	V	
1.1	*B40/1/H, S401, C40/1/H*	E	1108	C1E	M	Y		06/84 ▸	7701466419	**506347**	V	
1.2	*C40F, S40F, B40/F*	E	1237	C1G	M	Y		06/86 ▸ 08/90	7701466419	**506347**	V	
1.4,1.4 Turbo,1.4 i	*B40/2/3/7/J/M, S407, C40 2/3/5/7/J/M*	E	1397	C1J, C2J, C3J	M	Y		07/84 ▸	7701466419	**506347**	V	
1.4	*B40/2/3, C40/2/3*	E	1397	C2J, C1J	M	Y		07/84 ▸ 08/90	7701466420	**506367**	V	506620

• **New** Nouveau **Nuevo** Novo **Nuovo** Nieuw **Neu** Yeni Новый Nou

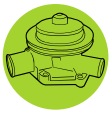

		Type Ctr.		cc					OE	Valeo		
RENAULT (.../...)												
R19 (.../...)												
1.7,1.7 i	*B53/3/B/C, D53C, C53/3/B C, L53/3/B/C*	E		1721	F3N, F2N	A	Y		07/88 ▸ 11/95	7701473365	**506019**	N
1.8 16V,1.8 i 16V	*B53/9/D, D53D, C53/9/D L53/9/D*	E		1763	F7P	M	Y		07/88 ▸ 10/95	7701473365	**506019**	N
1.8 i	*353/A/C/D, 453/A/C/D, 553/A/C/D/H 853/A/C, B53/8/Y, D53Y, C53/8/Y L53/8/Y*	E		1794	F3P	M	Y		05/92 ▸ 11/95	7701473365	**506019**	N
1.8 i	*453F, 353/F, 853F, B53Y, 553/F/H C53/N/Y, D53/N/Y, L53/N/Y*	E		1794	F3P	A	Y		05/92 ▸ 11/95	7701473365	**506019**	N
1.9 D,1.9 TD	*B53/4/I/J/K/T, C53/4/I/J K/T/Z, L53/4/I/J/K/T/Z S53/4/I/J/K*	D		1870	F8Q	M	Y		07/88 ▸ 10/95	7701473365	**506019**	N
R20												
2.0	*R127*	E		1995	829	M	Y		07/77 ▸ 1984	7701461006	**506073**	N
2.0	*R127*	E		1995	829	A	Y		07/77 ▸ 1984	7701461006	**506073**	N
2.2	*R127*	E		2165	851	M	Y		07/80 ▸ 1984	7701461006	**506073**	N
2.2	*R127*	E		2165	851	A	Y		07/80 ▸ 1984	7701461006	**506073**	N
2.1,2.1 TD Turbo D	*R127*	D		2068	852, J8S	M	Y		10/79 ▸ 1984	7701461336	**506074**	N
R21												
1.4	*K48U, B48/D, L48/D/U*	E		1397	C2J, C2L	M	Y		06/88 ▸ 1994	7701466419	**506347**	V
1.4	*K48U, B48/D, L48/D/U*	E		1397	C2J, C2L	M	Y		06/88 ▸ 1994	7701466420	**506367**	V 506620
1.4	*B48U, L48U*	E		1397	C2L	A	Y		06/88 ▸ 03/92	7701466420	**506367**	V 506620
1.4	*B48U, L48U*	E		1397	C2L	A	Y		06/88 ▸ 03/92	7701466419	**506347**	V
1.7,1.7 i	*B48/1/2/E/F, K48/1/2/4/E F/M/N, L48/1/2/E/F/M/N S48/1/2*	E		1721	F2N, F3N	M	Y		03/86 ▸	7701473365	**506019**	N
1.7,1.7 i	*B48/2/E, L48/2/E*	E		1721	F2N, F3N	A	Y		06/88 ▸ 04/93	7701473365	**506019**	N
2.0	*K48J, L48J, B48/J*	E		1965	F2R	M	Y		06/86 ▸ 03/92	7701473365	**506019**	N
2.0,2.0 i	*K483, L483, B48/3*	E		1995	J7R	M	Y		03/86 ▸	7701467223	**506072**	N
2.0,2.0 i F197764 ▸	*B48/3/C/R/Y, K48/3/9/C/R S, L48/3/C/Q/R/Y*	E		1995	J7R, J6T, J6R	M	Y		▸ 08/95	7701465513	**506311**	N
2.0,2.0 i	*B48/3/C, K48/3/9/C/S, L48 3/C*	E		1995	J7R, J6T, J6R	A	Y		▸ 08/95	7701465513	**506311**	N
2.0	*K48/9/S, L48/9/S*	E		1995	J6R, J6T	A	Y		09/86 ▸	7701464538	**506086**	N
2.0,2.0 i ▸ F197767	*K483, L483, B48/3*	E		1995	J7R	A	Y		07/86 ▸	7701467223	**506072**	N
2.0,2.0 i Turbo ▸ F209862	*K48/9/S, L48/5/9/S*	E		1995	J7R, J6R, J6T	M	Y		06/86 ▸	7701464538	**506086**	N
2.2,2.2 i	*K48K, L48K, B48/K*	E		2165	J7T	M	Y		06/86 ▸	7701467223	**506072**	N
2.2,2.2 i F241443 ▸	*K48K, L48K, B48/K*	E		2165	J7T	M	Y			7701465513	**506311**	N
2.2,2.2 i	*K48K, L48K, B48/K*	E		2165	J7T	A	Y			7701465513	**506311**	N
2.2,2.2 i ▸ F241442	*K48K, L48K, B48/K*	E		2165	J7T	A	Y		08/86 ▸	7701467223	**506072**	N
1.9 D	*K48H, L48H, S48H, B48/H*	D		1870	F8Q	M	Y		05/89 ▸ 03/93	7701473365	**506019**	N
2.1 D,2.1 TD	*B48/0/6/7/8/P/V/W, K48/0 6/7/8/P/V/W, L48/0/6/7/8 A/O/P/V/W, S48/0/6/V*	D		2068	J8S	M	Y		06/86 ▸	7701467223	**506072**	N
R25												
2.0 241853 ▸	*B29/2/4/H*	E		1995	J7R	M	Y		▸ 1992	7701465513	**506311**	N
2.0	*B29/2/H*	E		1995	J7R	A	Y		06/89 ▸ 1992	7701465513	**506311**	N
2.0 ▸ 308131	*B297*	E		1995	J6R	A	Y		09/83 ▸	7701461006	**506073**	N
2.0 ▸ 308131	*B29/7/H*	E		1995	J6R, J7R	M	Y		09/83 ▸	7701461006	**506073**	N
2.2 259469 ▸	*B29/B/E*	E		2165	J7T	M	Y		▸ 1992	7701465513	**506311**	N
2.2 259623 ▸	*B29/B/E*	E		2165	J7T	A	Y		▸ 1992	7701465513	**506311**	N

• **New** Nouveau **Nuevo** Novo **Nuovo** Nieuw **Neu** Yeni Новый Nou

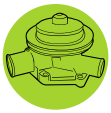

		Type Ctr.	cc					2 3	OE	Valeo		
RENAULT (.../...)												
Clio II (2001>) (.../...)												
1.0 i	*B80Y*	E	999	D7D	M	Y		04/01 ▸	8200088663	**506580**	SS	
▸011001												
1.2 i 16V	*BB11, BB0/5/W, CB11, CB0 5/W*	E	1149	D4F	M	Y		04/01 ▸	8200042880	**506780**	SS	
1.2 i	*BB0/A/F, BB1/D/K, CB0/A/F, SB0F*	E	1149	D7F	M	Y		04/01 ▸	8200088663	**506580**	SS	
▸011001	*SB10, CB1/0/K*											
1.4 i	*BB0/C/S, CB0/C/S*	E	1390	E7J	M	N		04/01 ▸	7700866518	**506564**	CR	
1.4 i,1.4 i 16V	*BB0/B/L/P, BB1/3/7/L, CB0 B/L/P, CB1/3/7/L*	E	1390	K7J, K4J	M	N		04/01 ▸	8200146298	**506573**	CR	
1.4 i,1.4 i 16V	*BB0/L/P, BB1/3/7/L, CB0/L P, CB1/3/L*	E	1390	K4J, K7J	M	Y	20 teeth	04/01 ▸	8200146297	**506655**	CR	
1.4 i 16V	*BB0/L/P, BB1/3/L, CB0/L/P CB1/3/L*	E	1390	K4J	A	N		04/01 ▸	8200146298	**506573**	CR	
1.4 i	*BB0S, CB0S*	E	1390	E7J	A	N		04/01 ▸	7700866518	**506564**	CR	
1.4 i 16V	*BB0/L/P, BB1/3/L, CB0/L/P CB1/3/L*	E	1390	K4J	A	Y	20 teeth	04/01 ▸	8200146297	**506655**	CR	
1.6 i	*CB0D, BB0/0/D*	E	1598	K7M	M	N		04/01 ▸	8200146298	**506573**	CR	
1.6 i 16V	*BB0/1/H/T, BB1/4/D/J, CB0 H/T, CB1/4/D*	E	1598	K4M	M	Y	20 teeth	04/01 ▸	8200146297	**506655**	CR	
1.6 i 16V	*CB14, BB1/4/R*	E	1598	K4M	A	Y	20 teeth	04/01 ▸	8200146297	**506655**	CR	
1.6 i	*BB0D, CB0D*	E	1598	K7M	A	N		04/01 ▸	8200146298	**506573**	CR	
2.0 i 16V	*CB1/5/C/N*	E	1998	F4R	M	Y		04/01 ▸	7701473365	**506019**	N	
1.5 dCi	*BB0/7/8, CB0/7/8, SB0/7/9*	D	1461	K9K	M	Y		04/01 ▸	7701476496	**506674**	SS	
1.9 D,1.9 dTi	*BB2C, BB0/2/E/J/U/V, CB2C CB0/E/J/U, SB0/J/R*	D	1870	F9Q, F8Q	M	Y		04/01 ▸	7701473365	**506019**	N	
Clio III (2005>)												
1.2 i 16V,1.2 i TCE 16V	*BR0/1/2/3/E/J/P/Q/R/S BR1/D/L, CR1L, CR0/2/3/E J/P/Q/R/S, SR0/J/S*	E	1149	D4F	M	Y		09/05 ▸	8200702750	**506968**	SS	
1.4 i 16V	*BR1E, BR0/0/A, CR1E, SR0A*	E	1390	K4J	M	Y	20 teeth	09/05 ▸	8200428447	**506655**	CR	
▸051024	*CR0/0/A*											
1.6 i 16V	*BR0/B/Y, BR1/J/M, CR1M*	E	1598	K4M	A	Y	20 teeth	09/05 ▸	8200428447	**506655**	CR	
051024 ▸	*CR0/B/Y*											
1.6 i 16V	*BR0/5/9/B/T/U/Y, BR1/J/M*	E	1598	K4M	M	Y	20 teeth	09/05 ▸	8200428447	**506655**	CR	
▸051024	*CR1M, CR0/5/9/B/T/U/Y*											
2.0 i 16V	*CR0N*	E	1998	F4R	M	Y		06/06 ▸	7701472182	●**506698**	SS	
1.5 dCi	*BR0/F/G/H/V/W, BR1/A/B/C*	D	1461	K9K	M	Y		09/05 ▸	7701478031	**506863**	SS	
▸070111	*F/G/N, CR0/F/G/H/V/W, CR1 C/G/N, SR0/F/G/H*											
Clio III (2009>)												
1.2 i 75 16V	*CR1U, KR1U, SR1U, BR1/U*	F	1149	D4F	M	Y		04/09 ▸	7701478923	**506780**	SS	
1.2 TCe 16V,1.2 i 16V	*BR0/1/2/3/E/J/P/R, BR1/1 D/L, CR11, CR0/2/E/J/P/R SR0P, KR0/2/E/J/P*	E	1149	D4F	M	Y		04/09 ▸	7701478923	**506780**	SS	
2.0 i 16V	*BR0/C/K, CR0/C/K*	E	1997	M4R	M	Y		04/09 ▸	B1010EN20B	▲**506965**	SS	
2.0 i 16V	*BR0C, CR0C*	E	1997	M4R	A	Y		04/09 ▸	B1010EN20B	▲**506965**	SS	
1.5 dCi	*BR0/F/G/H, BR1/C/N/T, CR0 F/G/H, CR1/C/N/T, KR0/F/G H, KR1/C/N, SR0/F/G/H*	D	1461	K9K	M	Y		04/09 ▸	7701478031	**506863**	SS	
1.5 dCi	*BR1/H/S/V, CR1/H/S/V, KR1 H/S/V, SR1/H/V*	D	1461	K9K	M	Y		04/09 ▸	7701478830	▲**506993**	SS	
Clio IV (2012>)												
1.5 dCi	*BHAL*	D	1461	K9K	M	Y		10/12 ▸	7701478830	▲**506993**	SS	
Espace (84>91)												
2.0	*S112, J11/2/6*	E	1995	J6R, J7R	M	Y		09/84 ▸ 1991	7701463182	**506076**	N	
2.2	*J117*	E	2165	J7T	M	Y		09/86 ▸ 1991	7701463182	**506076**	N	
2.1 TD	*S115, J11/4/5*	D	2068	J8S	M	Y		09/84 ▸ 1991	7701463182	**506076**	N	
Espace II (91>96)												
2.0 i	*J636*	E	1995	J7R	M	Y		01/91 ▸ 08/96	7701465513	**506311**	N	

• **New** Nouveau **Nuevo** Novo **Nuovo** Nieuw **Neu** Yeni Новый Nou

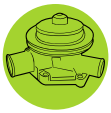

		Type Ctr.		cc					OE	Valeo		
RENAULT (.../...)												
Laguna (94>98) (.../...)												
3.0 i V6	*B56E*	E		2963	Z7X	M	Y		01/94 ▸ 12/96	7701468082	**506526**	SS
3.0 i V6	*B56/5/R*	E		2963	Z7X	A	Y		01/94 ▸ 04/98	7701468082	**506526**	SS
3.0 i V6	*B56V*	E		2946	L7X	M	Y		05/97 ▸ 04/98	9640344280	**506643**	CR
3.0 i V6	*B56V*	E		2946	L7X	A	Y		07/97 ▸ 04/98	9640344280	**506643**	CR
2.2 D	*B56/2/F*	D		2188	G8T	M	N		03/94 ▸ 11/95	7700871801	**506579**	N
2.2 D,2.2 Dt	*B569, B56F, B56P, B566 B562*	D		2188	G8T	M	N		11/95 ▸ 04/98	7700111841	●**506637**	CR
Laguna (98>2000)												
1.8 i GPL	*B560*	G		1794	F3P	M	Y		05/98 ▸ 12/00	7701473365	**506019**	N
1.6 i 16V	*B56/1/8*	E		1598	K4M	M	Y	20 teeth	05/98 ▸ 12/98	8200146297	**506655**	CR
981201 ▸												
1.8 i 16V	*B56/3/4/Y*	E		1783	F4P	M	Y		09/98 ▸ 12/00	7701473365	**506019**	N
1.8 i	*B560*	E		1794	F3P	M	Y		09/99 ▸ 12/00	7701473365	**506019**	N
2.0 i 16V	*B56M*	E		1948	N7Q	M	Y		05/98 ▸ 11/98	7438610035	**506325**	CR
981111 ▸												
2.0 i,2.0 i 16V	*556A, B56L*	E		1998	F3R, F4R	M	Y		05/98 ▸ 12/00	7701473365	**506019**	N
2.0 i	*B56/L/U*	E		1998	F3R	A	Y		05/98 ▸ 12/00	7701473365	**506019**	N
1.9 dCi,1.9 dTi	*B56/J/W*	D		1870	F9Q	M	Y		05/98 ▸ 12/00	7701473365	**506019**	N
1.9 dTi	*B56J*	D		1870	F9Q	A	Y		07/99 ▸ 12/00	7701473365	**506019**	N
2.2 dT	*B569*	D		2188	G8T	M	Y		05/98 ▸ 12/00	7701473365	**506019**	N
Laguna Nevada (95>98)												
1.8 i	*K56/0/S/T/Z*	E		1794	F3P	M	Y		07/95 ▸ 04/98	7701473365	**506019**	N
2.0 i 16V	*K56/D/M*	E		1948	N7Q	M	Y		07/95 ▸ 04/98	7438610006	**506325**	CR
2.0 i	*K56/C/H/L/N*	E		1998	F3R	M	Y		07/95 ▸ 04/98	7701473365	**506019**	N
2.0 i	*K56/C/H/L/N*	E		1998	F3R	A	Y		07/95 ▸ 04/98	7701473365	**506019**	N
3.0 i V6	*K56/5/R*	E		2963	Z7X	A	Y		02/96 ▸ 04/98	7701468082	**506526**	SS
2.2 D	*S56F, K56/2/F*	D		2188	G8T	M	N		07/95 ▸ 11/95	7700871801	**506579**	N
2.2 D,2.2 dT	*K566, K56F, K569, K562 S566, S56F*	D		2188	G8T	M	N		07/95 ▸ 04/98	7700111841	●**506637**	CR
Laguna Nevada (98>2000)												
1.8 i GPL	*K560*	G		1794	F3P	M	Y		05/98 ▸ 12/00	7701473365	**506019**	N
1.6 i 16V	*K56/1/8*	E		1598	K4M	M	Y	20 teeth	05/98 ▸ 12/98	8200146297	**506655**	CR
981201 ▸												
1.8 i 16V	*K56/3/4/Y*	E		1783	F4P	M	Y		05/98 ▸ 12/00	7701473365	**506019**	N
1.8 i	*K560*	E		1794	F3P	M	Y		05/99 ▸ 12/00	7701473365	**506019**	N
2.0 i 16V	*K56M*	E		1948	N7Q	M	Y		05/98 ▸ 11/98	7438610035	**506325**	CR
981111 ▸												
2.0 i	*K56L*	E		1998	F3R	M	Y		05/98 ▸ 12/00	7701473365	**506019**	N
2.0 i	*K56L*	E		1998	F3R	A	Y		05/98 ▸ 12/00	7701473365	**506019**	N
1.9 dCi,1.9 dTi	*S56J, K56/J/W*	D		1870	F9Q	M	Y		05/98 ▸ 12/00	7701473365	**506019**	N
1.9 dTi	*K56J*	D		1870	F9Q	A	Y		09/99 ▸ 12/00	7701473365	**506019**	N
2.2 dT	*K569*	D		2188	G8T	M	N		05/98 ▸ 12/00	7700111841	●**506637**	CR
Laguna II (2001>)												
1.6 i GPL 16V	*BG0L, KG0L*	G		1598	K4M	M	Y	20 teeth	01/01 ▸	8200146297	**506655**	CR
1.6 i 16V	*BG0/A/L/U, KG0/A/L/U*	E		1598	K4M	M	Y	20 teeth	01/01 ▸	8200146297	**506655**	CR
1.6 i 16V	*BG0/A/U, KG0/A/U*	E		1598	K4M	A	Y	20 teeth	01/01 ▸	8200146297	**506655**	CR
1.8 i 16V	*BG0/B/C/J/M/V, KG0/B/C/J M/V*	E		1783	F4P	M	Y		01/01 ▸	7701472182	●**506698**	SS
1.8 i 16V	*KG0J, BG0/6/J*	E		1783	F4P	A	Y		01/01 ▸	7701472182	●**506698**	SS
2.0 i 16V,2.0 i Turbo 16V 2.0 ide 16V	*BG0/0/N/S/W, KG0/0/N/S/W*	E		1998	F4R, F5R	M	Y		01/01 ▸	7701472182	●**506698**	SS
2.0 i 16V,2.0 i Turbo 16V 2.0 ide 16V	*BG0/N/S/W, KG0/N/S/W*	E		1998	F5R, F4R	A	Y		01/01 ▸	7701472182	●**506698**	SS
1.9 dCi	*BG0/E/G/R, KG0/E/G/R*	D		1870	F9Q	M	Y		01/01 ▸	7701472182	●**506698**	SS
1.9 dCi	*BG0E, KG0E*	D		1870	F9Q	A	Y		01/01 ▸	7701472182	●**506698**	SS
2.2 dCi 16V	*BG0F, KG0F*	D		2188	G9T	M	Y		01/01 ▸	7701472625	**506709**	N
2.2 dCi 16V	*BG0F*	D		2188	G9T	A	Y		01/01 ▸	7701472625	**506709**	N
Laguna II (2005>)												
1.6 i 16V	*BG0L, KG0L*	G		1598	K4M	M	Y	20 teeth	03/05 ▸	8200146297	**506655**	CR

• **New** Nouveau **Nuevo** Novo **Nuovo** Nieuw **Neu** Yeni Новый Nou

Valeo

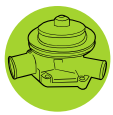

RENAULT (.../...)

Laguna II (2005>) (.../...)

1.6 i 16V	BG0/A/L/U, BG1/G/H, KG0/A L/U, KG1/G/H	E	1598	K4M	M	Y	20 teeth	03/05 ▸	8200146297	**506655**	CR	
1.8 i 16V	BG0/4/B/C/J/M/V, KG0/4/B C/J/M/V	E	1783	F4P	M	Y		03/05 ▸	7701472182	●**506698**	SS	
1.8 i 16V	BG0/6/J/M, KG0/6/J/M	E	1783	F4P	A	Y		03/05 ▸	7701472182	●**506698**	SS	
2.0 i 16V,2.0 i Turbo 16V	BG0/0/3/K/N/P/S/T/W/Z BG1/L/M/Y, KG0/0/3/K/N/P S/T/W/Z, KG1/L/Y	E	1998	F4R, F5R	M	Y		03/05 ▸	7701472182	●**506698**	SS	
2.0 i 16V,2.0 i Turbo 16V	BG0/0/3/K/N/P/S/W/Z, BG1 L/M/Y, KG1Y, KG0/0/3/K/N P/S/W/Z	E	1998	F5R, F4R	A	Y		03/05 ▸	7701472182	●**506698**	SS	
1.9 dCi	BG0/5/G, BG1/0/2/3/A/V/W KG0/5/G, KG1/2/3/A/V/W	D	1870	F9Q	M	Y		03/05 ▸	7701474435	**506725**	SS	
1.9 dCi	BG10, BG0/8/E/G/R, KG10 KG0/8/E/G/R	D	1870	F9Q	M	Y		03/05 ▸	7701472182	●**506698**	SS	
1.9 dCi	BG0/5/G, BG1/0/2/3/A/V/W KG0/5/G, KG1/2/3/A/V/W	D	1870	F9Q	M	Y		03/05 ▸ 09/07	7701479114	●**526001**	SS	
1.9 dCi	BG1/2/V, KG1/2/V	D	1870	F9Q	A	Y		03/05 ▸ 09/07	7701479114	●**526001**	SS	
2.0 dCi,2.0 dCi 16V	BG1/4/S/T, KG1/4/S/T	D	1995	M9R	M	Y		07/05 ▸ 09/07	8200332040	**506902**	N	
2.2 dCi,2.2 dCi 16V	BG0/9/F, KG0/9/F	D	2188	G9T	M	Y		03/05 ▸	7701474190	**506709**	N	
2.2 dCi,2.2 dCi 16V	BG0F, KG0F	D	2188	G9T	A	Y		03/05 ▸	7701474190	**506709**	N	

Laguna III 2007>)

2.0 i Ethanol 16V	BT1H, KT1H	F	1997	M4R	M	Y		07/09 ▸	210102773R	▲**506965**	SS	

Laguna III (2007>)

2.0 i Ethanol 16V	BT1H	E	1997	M4R	M	Y		07/09 ▸	8200332040	**506902**	N	
2.0 Turbo 16V	BT0/6/H/Y, KT0/H/Y	E	1998	F4R	A	Y		10/07 ▸	7701472182	●**506698**	SS	
1.5 dCi	KT0A, BT0/0/A	D	1461	K9K	M	Y		10/07 ▸	7701478031	**506863**	SS	
1.5 dCi	KT0R	D	1461	K9K	M	Y		10/07 ▸ 11/10	7701478830	▲**506993**	SS	
1.5 dCi 110	BT0R	D	1461	K9K	M	Y		11/10 ▸	7701478830	▲**506993**	SS	
2.0 dCi,2.0 dCi 16V	BT0/1/8/9/J/K/M, BT1/4/A D/E/F/N/W, DT0/K/M, DT1/D E/F/N, KT0/1/8/9/J/K/M KT1/A/D/E/F	D	1995	M9R	M	Y		10/07 ▸	8200332040	**506902**	N	
2.0 dCi 16V	BT0/1/9, DT0/1/9, KT0/1/9	D	1995	M9R	A	Y		10/07 ▸	8200332040	**506902**	N	
3.0 dCi V6 24V	DT03, KT03, BT0/3	D	2993	V9X	A	Y		10/08 ▸	8200332040	**506902**	N	

Latitude

2.0 i 16V	L70/B/D	E	1997	M4R	M	Y		11/10 ▸	210102773R	▲**506965**	SS	
2.0 i 16V	L70/A/D/L	E	1997	M4R	A	Y		11/10 ▸	210102773R	▲**506965**	SS	
1.5 dCi	L70R	D	1461	K9K	M	Y		11/10 ▸	7701478830	▲**506993**	SS	

Lutecia (Jap)

1.4 i	B57B, C57B	E	1390	E7J	M	Y		03/96 ▸ 02/98	7701633125	**506099**	CR	
1.8 i	357A, 557A	E	1794	F3P	A	Y		10/94 ▸ 02/98	7701473365	**506019**	N	

Mégane (95>99)

1.4 i	BA0/E/T	E	1390	E7J	M	N		11/95 ▸ 02/99	7700866518	**506564**	CR	
1.4 i 16V	DA0W	E	1390	K4J	M	Y		09/98 ▸ 02/99	7701473365	**506019**	N	
1.6 i	DA0F, EA0F, BA0/F/L/S	E	1598	K7M	M	N		11/95 ▸ 02/99	8200146298	**506573**	CR	
1.6 i 16V	DA04	E	1598	K4M	M	Y	20 teeth	06/98 ▸ 02/99	8200146297	**506655**	CR	
1.6 i	BA0F, DA0F	E	1598	K7M	A	N		11/95 ▸ 02/99	8200146298	**506573**	CR	
1.6 i 16V	DA04	E	1598	K4M	A	Y	20 teeth	06/98 ▸ 02/99	8200146297	**506655**	CR	
2.0 i,2.0 i 16V 2.0 ide 16V	BA0/7/G/H, DA0/3/G/H, EA0 G/H	E	1998	F5R, F3R, F7R	M	Y		11/95 ▸ 02/99	7701473365	**506019**	N	
2.0 i	DA0G	E	1998	F3R	M	N		11/95 ▸ 06/97	8200146298	**506573**	CR	
2.0 i	DA0G, EA0G, BA0/7/G	E	1998	F3R	A	Y		11/95 ▸ 02/99	7701473365	**506019**	N	
1.9 dTi	DA0N	D	1870	F9Q	M	N		11/95 ▸ 06/97	8200146298	**506573**	CR	
1.9 D,1.9 dT,1.9 dTi	DA0N, BA0/8/9/A/K/N/U/Y SA0/9/A/N/U/Y	D	1870	F8Q, F9Q	M	Y		11/95 ▸ 02/99	7701473365	**506019**	N	
1.9 dTi	DA0N	D	1870	F9Q	A	N		11/95 ▸ 06/97	8200146298	**506573**	CR	

• **New** Nouveau **Nuevo** Novo **Nuovo** Nieuw **Neu** Yeni Новый Nou

		Type Ctr.		cc					2 3	OE	Valeo	
RENAULT (.../...)												
Mégane (95>99) (.../...)												
1.9 dTi	*BA0N*	D		1870	F9Q	A	Y		04/97 ▸ 02/99	7701473365	**506019**	N
Mégane (98>)												
1.4 i	*BA0V, KA0V*	E		1390	E7J	M	N		02/99 ▸	7700866518	**506564**	CR
1.4 i 16V	*BA0/D/W, BA1/0/H, DA0/D/W DA1/0/H, EA1H, EA0/D/W KA0/D/W, KA1/0/H*	E		1390	K4J	M	Y	20 teeth	02/99 ▸	8200146297	**506655**	CR
1.6 i,1.6 i 16V	*BA0/0/4/B, BA1/1/J/K, DA0 4/B, DA1/1/J, EA0/4/B EA1/1/J, KA0/4/B/F, KA1 1/J*	E		1598	K4M, K7M	M	Y	20 teeth	10/98 ▸	8200146297	**506655**	CR
1.6 i	*BA1C, KA0F, BA0/F*	E		1598	K7M	M	N		01/99 ▸ 10/00	8200146298	**506573**	CR
1.6 i	*BA0F*	E		1598	K7M	A	N		02/99 ▸ 10/00	8200146298	**506573**	CR
1.6 i 16V	*BA0/4/B, BA1/1/J, DA0/4/B EA0B, DA1/1/J, EA1/1/J KA11, KA0/4/B*	E		1598	K4M	A	Y	20 teeth	02/99 ▸	8200146297	**506655**	CR
1.8 i 16V	*BA1/2/A/M/R, KA1/2/A/R*	E		1783	F4P	M	Y		10/99 ▸	7701473365	**506019**	N
2.0 i 16V,2.0 ide 16V	*BA1/D, DA0/3/C/H/P, DA1/3 S, EA0/3/C/P, EA1/3/S*	E		1998	F5R, F4R, F7R	M	Y		02/99 ▸	7701473365	**506019**	N
1.9 d,1.9 dCi,1.9 dTi	*BA0/N/R, BA1/F/U, DA0/5/N KA1U, KA0/5/J/N, SA1U SA0/5/N*	D		1870	F9Q, F8Q	M	Y		02/99 ▸	7701473365	**506019**	N
1.9 dCi,1.9 dTi	*BA0/5/N, DA0/5/N, KA0/5/N*	D		1870	F9Q	A	Y		02/99 ▸	7701473365	**506019**	N
Mégane Classic (96>99)												
1.4 i	*LA0/E/V*	E		1390	E7J	M	N		09/96 ▸ 02/99	7700866518	**506564**	CR
1.4 i 16V	*LA0W*	E		1390	K4J	M	Y	20 teeth	06/98 ▸ 02/99	8200146297	**506655**	CR
1.6 e	*LA1C, LA0/F/L/S*	E		1598	K7M	M	N		09/96 ▸ 02/99	8200146298	**506573**	CR
1.6 i 16V	*LA04*	E		1598	K4M	M	Y	20 teeth	06/98 ▸ 02/99	8200146297	**506655**	CR
1.6 e	*LA0F*	E		1598	K7M	A	N		09/96 ▸ 02/99	8200146298	**506573**	CR
1.6 i 16V	*LA04*	E		1598	K4M	A	Y	20 teeth	06/98 ▸ 02/99	8200146297	**506655**	CR
2.0 i	*LA0/7/G*	E		1998	F3R	M	Y		09/96 ▸ 02/99	7701473365	**506019**	N
2.0 i	*LA0/7/G*	E		1998	F3R	A	Y		09/96 ▸ 02/99	7701473365	**506019**	N
1.9 D,1.9 dT,1.9 dTi	*LA1U, LA0/8/A/K/N/R/U/Y*	D		1870	F9Q, F8Q	M	Y		09/96 ▸ 02/99	7701473365	**506019**	N
1.9 dTi	*LA0N*	D		1870	F9Q	A	Y		04/97 ▸ 02/99	7701473365	**506019**	N
Mégane Classic (99>2002)												
1.4 i 16V	*LA0/D/W, LA1/0/H*	E		1390	K4J	M	Y	20 teeth	03/99 ▸ 08/02	8200146297	**506655**	CR
1.4 i	*LA0V*	E		1390	E7J	M	N		03/99 ▸ 10/00	7700866518	**506564**	CR
1.6 i 16V	*LA0/0/4/B, LA1/1/J/K*	E		1598	K4M	M	Y	20 teeth	03/99 ▸ 08/02	8200146297	**506655**	CR
1.6 i	*LA1C*	E		1598	K7M	M	N		03/99 ▸ 05/00	8200146298	**506573**	CR
1.6 i 16V	*LA0/4/B, LA1/1/J*	E		1598	K4M	A	Y	20 teeth	03/99 ▸ 08/02	8200146297	**506655**	CR
1.8 i 16V	*LA1/2/A/M/R*	E		1783	F4P	M	Y		07/00 ▸ 08/02	7701473365	**506019**	N
2.0 i 16V	*LA1/D/L*	E		1998	F4R	M	Y		01/01 ▸ 10/01	7701473365	**506019**	N
2.0 i 16V	*LA1/D/L*	E		1998	F4R	A	Y		01/01 ▸ 10/01	7701473365	**506019**	N
1.9 D,1.9 dCi,1.9 dTi	*LA1U, LA0/1/5/N/R*	D		1870	F9Q, F8Q	M	Y		03/99 ▸ 08/02	7701473365	**506019**	N
1.9 dCi,1.9 dTi	*LA0/5/N*	D		1870	F9Q	A	Y		03/99 ▸ 08/02	7701473365	**506019**	N
Mégane II												
1.6 i 16V 051024 ▸	*KM0Y, LM0Y, BM0/Y*	F		1598	K4M	M	Y	20 teeth	09/02 ▸	8200428447	**506655**	CR
1.4 i 16V ▸051024	*BM1A, BM0/8/B/H, CM0/8/B H, KM0/B/H, LM1A, LM0/8/B H*	E		1390	K4J	M	Y	20 teeth	09/02 ▸	8200428447	**506655**	CR
1.6 i 16V 051024 ▸	*BM1B, BM0/C/J, EM1B, EM0 C/J, KM1B, KM0/C/J, LM1B LM0/C/J*	E		1598	K4M	A	Y	20 teeth	09/02 ▸	8200428447	**506655**	CR
1.6 i 16V ▸051024	*BM1B, BM0/C/J, CM1B, CM0 C/J, EM1B, EM0/C/J, KM1B KM0/C/J, LM1B, LM0/C/J*	E		1598	K4M	M	Y	20 teeth	09/02 ▸	8200428447	**506655**	CR

• **New** Nouveau **Nuevo** Novo **Nuovo** Nieuw **Neu** Yeni Новый Nou

Valeo

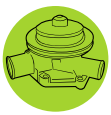

			CC						OE	Valeo		
RENAULT (.../...)												
Mégane II (.../...)												
2.0 i 16V,2.0 i Turbo 16V	*BM0/5/M/U/W, BM1/1/M/N/T U/V, CM0/5/M/U/W, CM1/M/N U, EM0/5/U/W, EM1/N/T/U KM0/5/U, KM1/M/N/U, LM0 5/U, LM1/M/N/U*	E	1998	F4R	M	Y		09/02 ▸	7701472182	●506698	SS	
2.0 i 16V	*BM0/5/U, BM1/M/U, CM0/5/U EM0/5/U, EM1/M/N/U, KM0 5/U, KM1/M/N/U, LM0/5/U LM1/M/N/U*	E	1998	F4R	A	Y		09/02 ▸	7701472182	●506698	SS	
1.5 dCi 070111 ▸	*BM0/2/F/T, BM1/3/E/F, CM0 2/F, EM1E, CM1/E/F, GM0/2 F, GM1/E/F, KM0/2/F/T KM1/3/E/F, LM0/2/F/T LM1/3/E/F, SM0/2/F, SM1 E/F*	D	1461	K9K	M	Y		09/02 ▸	7701478031	506863	SS	
1.5 dCi	*CM02, KM02, LM02, BM0/2*	D	1461	K9K	A	Y		09/03 ▸	7701475995	506863	SS	
1.5 dCi ▸ 070111	*BM13, BM0/2/F/T, CM0/2/F GM0/2/F, KM13, KM0/2/F/T LM13, LM0/2/F/T, SM0/2/F*	D	1461	K9K	M	Y		09/02 ▸ 01/07	7701476496	506674	SS	
1.9 dCi	*BM0/0/G/L, BM1/4/7/C/D/G CM0/0/G/L, EM0G, CM1/4/7 C/D/G, EM1/4/7/C/D/G, KM0 0/G/L, KM1/4/7/C/D/G, LM0 0/G/L, LM1/4/7/C/D/G*	D	1870	F9Q	M	Y		09/02 ▸ 07/09	7701479114	●526001	SS	
1.9 dCi	*CM14, BM1/4/D, KM14, EM1 4/D, LM1/4/D*	D	1870	F9Q	A	Y		03/04 ▸ 07/09	7701479114	●526001	SS	
1.9 dCi	*BM0/0/G/L, BM1/4/7/C/D/G CM0/0/G/L, EM0G, CM1/4/7 C/D/G, EM1/4/7/C/D/G, KM0 0/G/L, KM1/4/7/C/D/G, LM0 0/G/L, LM1/4/7/C/D/G*	D	1870	F9Q	M	Y		09/02 ▸	7701474435	506725	SS	
Mégane III												
1.6 i 110 16V	*KZ03, BZ03, DZ03*	F	1598	K4M	M	Y	20 teeth	10/08 ▸	8200582675	506655	CR	
1.6 i 100 16V 1.6 i 110 16V	*BZ1H, BZ0U, BZ0H, DZ0U BZ1B, DZ1B, KZ1B, DZ0H KZ0H, KZ0U, DZ1H*	E	1598	K4M	M	Y	20 teeth	10/08 ▸	8200582675	506655	CR	
2.0 i 140 16V	*BZ1/E/P, EZ1E, KZ0G, KZ1P DZ1/E/P*	E	1997	M4R	A	Y		06/09 ▸	210102773R	▲506965	SS	
1.5 dCi 105,1.5 dCi 85	*KZ0B, EZ0B, BZ0A, BZ0B DZ0B, DZ0A, KZ0A*	D	1461	K9K	M	Y		10/08 ▸	7701478031	506863	SS	
1.5 dCi	*BZ0/C/D, BZ1/A/F/G/M/W DZ0/C/D, EZ0D, EZ1G, DZ1 A/F/G/M/W, KZ0/C/D, KZ1/A F/G/M/W*	D	1461	K9K	M	Y		10/08 ▸	7701478830	▲506993	SS	
Mégane III												
1.5 dCi	*DZ09, KZ09, BZ0/9*	D	1461	K9K	A	Y		04/12 ▸	7701478830	▲506993	SS	
1.9 dCi 16V	*BZ0/J/N, BZ1/J/K/S, DZ0/J N, DZ1/J/K/S, EZ0/J/N EZ1/K/S, KZ1S, KZ0/J/N*	D	1870	F9Q	M	Y		10/08 ▸	7701478846	▲526010	SS	
Mégane III												
2.0 dCi 160	*KZ0L, BZ0L, DZ0L*	D	1995	M9R	M	Y		10/08 ▸	8200332040	506902	N	
2.0 dCi 150 2.0 dCi 160 16V	*KZ0Y, EZ0L, DZ0Y, BZ0Y*	D	1995	M9R	A	Y		10/08 ▸	8200332040	506902	N	
Mégane Scénic (96>99)												
1.4 i	*JA0E*	E	1390	E7J	M	N		10/96 ▸ 09/99	7700866518	506564	CR	
1.4 i 16V	*JA0W*	E	1390	K4J	M	Y	20 teeth	02/99 ▸ 09/99	8200146297	506655	CR	
1.6 i	*JA0/F/L*	E	1598	K7M	M	N		10/96 ▸ 09/99	8200146298	506573	CR	
1.6 i	*JA0F*	E	1598	K7M	A	N		10/96 ▸ 09/99	8200146298	506573	CR	
2.0 i	*JA0G*	E	1998	F3R	M	Y		10/96 ▸ 09/99	7701473365	506019	N	

• **New** Nouveau **Nuevo** Novo **Nuovo** Nieuw **Neu** Yeni Новый Nou

		Type Ctr.	cc						OE	Valeo		
RENAULT (.../...)												
Mégane Scénic (96>99) (.../...)												
2.0 i	JA0G	E	1998	F3R	A	Y		10/96 ▸ 09/99	7701473365	**506019**	N	
1.9 D,1.9 dT,1.9 dTi	FA0/J/N/Y, JA0/J/K/N/Y	D	1870	F8Q, F9Q	M	Y		10/96 ▸ 09/99	7701473365	**506019**	N	
1.9 dTi	JA0N	D	1870	F9Q	A	Y		04/97 ▸ 09/99	7701473365	**506019**	N	
Mégane Scénic (99>2003)												
1.4 i 16V	JA0/D, JA1/0/H	E	1390	K4J	M	Y	20 teeth	09/99 ▸	8200146297	**506655**	CR	
1.6 i 16V	JA0/0/4/B, JA1/1/J	E	1598	K4M	M	Y	20 teeth	09/99 ▸	8200146297	**506655**	CR	
1.6 i 16V	JA0/4/B, JA1/1/J	E	1598	K4M	A	Y	20 teeth	09/99 ▸	8200146297	**506655**	CR	
1.8 i 16V	JA1/2/A/M/R	E	1783	F4P	M	Y		09/99 ▸	7701473365	**506019**	N	
2.0 i 16V	JA0/C, JA1/3/D/L/S	E	1998	F4R	M	Y		09/99 ▸	7701473365	**506019**	N	
2.0 i 16V	JA0/C, JA1/3/B/D/L/S	E	1998	F4R	A	Y		09/99 ▸	7701473365	**506019**	N	
1.9 dCi,1.9 dTi	JA0/1/5/N, JA1/F/U	D	1870	F9Q	M	Y		09/99 ▸	7701473365	**506019**	N	
1.9 dTi	JA0N	D	1870	F9Q	A	Y		09/99 ▸	7701473365	**506019**	N	
Modus												
1.2 i 16V	FP0/K, JP0/C/K	E	1149	D4F	M	Y		09/04 ▸	8200238333	**506780**	SS	
1.4 i 16V	JP0J	E	1390	K4J	M	Y	20 teeth	09/04 ▸	8200146297	**506655**	CR	
1.6 i 16V	JP0/B/L/M/V	E	1598	K4M	M	Y	20 teeth	09/04 ▸	8200146297	**506655**	CR	
1.6 i 16V	JP0B	E	1598	K4M	A	Y	20 teeth	09/04 ▸	8200146297	**506655**	CR	
1.5 dCi	FP0/D/E, JP0/D/E/F/G/H	D	1461	K9K	M	Y		09/04 ▸	7701475995	**506863**	SS	
1.5 dCi	JP04, JP1D	D	1461	K9K	M	Y		09/10 ▸	7701478830	▲**506993**	SS	
Safrane												
2.0 i 16V 981111 ▸	B54L	E	1948	N7Q	M	Y		09/96 ▸ 11/98	7438610035	**506325**	CR	
2.0 i 16V ▸ 981111	B54L	E	1948	N7Q	A	Y		09/96 ▸ 11/98	7438610035	**506325**	CR	
2.0 Si,2.0 i	B54/0/2/E	E	1995	J7R	M	Y		05/92 ▸ 09/96	7701466788	**506314**	N	
2.0 Si,2.0 i	B54/0/2/E	E	1995	J7R	A	Y		05/92 ▸ 09/96	7701466788	**506314**	N	
2.2 Si,2.2 i	B54/1/3	E	2165	J7T	M	Y		05/92 ▸ 09/96	7701466788	**506314**	N	
2.2 Si,2.2 i	B54/1/3	E	2165	J7T	A	Y		05/92 ▸ 09/96	7701466788	**506314**	N	
2.5 i 20V ▸ 981111	B54F	E	2435	N7U	M	Y		09/96 ▸ 11/98	7438610006	**506325**	CR	
2.5 i 20V ▸ 981111	B54F	E	2435	N7U	A	Y		09/96 ▸ 11/98	7438610006	**506325**	CR	
3.0 i	B54M	E	2963	Z7X	A	Y		09/96 ▸ 12/98	7701466850	**506526**	SS	
3.0 i	B54N	E	2946	L7X	A	Y		12/98 ▸ 11/00	9640344280	**506643**	CR	
3.0 i V6,3.0 i V6i 3.0 i V6i Biturbo	B54/4/5	E	2975	Z7X	M	Y		05/92 ▸ 09/96	7701466850	**506526**	SS	
3.0 i V6	B54/4/B/J	E	2975	Z7X	A	Y		05/92 ▸ 09/96	7701466850	**506526**	SS	
2.1 Dt	B546	D	2068	J8S	M	Y		05/92 ▸ 09/96	7701466779	**506316**	N	
2.1 Dt	B546	D	2068	J8S	M	Y		05/92 ▸	7701466778	**506315**	N	
2.2 TD	B54G	D	2188	G8T	M	N		09/96 ▸ 11/00	7700111841	●**506637**	CR	
2.5 Dt	B548	D	2499	S8U	M	Y		04/93 ▸ 09/96	7701467278	**506297**	N	
2.5 Dt	B548	D	2499	S8U	A	Y		04/93 ▸ 09/96	7701467278	**506297**	N	
Scénic II												
1.6 i GPL 16V ▸ 051024	JM0Y	F	1598	K4M	M	Y	20 teeth	05/03 ▸	8200428447	**506655**	CR	
1.4 i 16V ▸ 051024	JM1A, JM0/B/H	E	1390	K4J	M	Y	20 teeth	05/03 ▸	8200428447	**506655**	CR	
1.6 i 16V 051024 ▸	JM1B, JM0/C/J	E	1598	K4M	M	Y	20 teeth	05/03 ▸	8200428447	**506655**	CR	
1.6 i 16V 051024 ▸	JM1B, JM0/C/J	E	1598	K4M	A	Y	20 teeth	05/03 ▸	8200428447	**506655**	CR	
2.0 i 16V,2.0 i Turbo 16V	JM0/5/U/W, JM1/N/T/U	E	1998	F4R	M	Y		05/03 ▸	7701472182	●**506698**	SS	
2.0 i 16V	JM0/5/U, JM1/M/N/U	E	1998	F4R	A	Y		05/03 ▸	7701472182	●**506698**	SS	
1.5 dCi 040405 ▸	JM0/2/F/T, JM1/3/E/F	D	1461	K9K	M	Y		04/04 ▸	7701475995	**506863**	SS	
1.5 dCi 040405 ▸	JM02	D	1461	K9K	A	Y		04/04 ▸	7701475995	**506863**	SS	
1.5 dCi ▸ 040405	JM13, JM0/2/F/T	D	1461	K9K	M	Y		05/03 ▸ 04/04	7701476496	**506674**	SS	

• **New** Nouveau **Nuevo** Novo **Nuovo** Nieuw **Neu** Yeni Новый Nou

Valeo

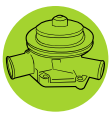

		Type Ctr.		cc					OE	Valeo		
RENAULT (.../...)												
Scénic II (.../...)												
1.5 dCi ▸040405	JM02	D	1461	K9K	A	Y		05/03 ▸ 04/04	7701476496	**506674**	SS	
1.9 dCi	JM0/G/L, JM1/2/4/5/7/D/G	D	1870	F9Q	M	Y		05/03 ▸	7701474435	**506725**	SS	
1.9 dCi	JM0/G/L, JM2C, JM1/2/4/5 7/D/G	D	1870	F9Q	M	Y		05/03 ▸ 11/09	7701479114	**●526001**	SS	
1.9 dCi	JM1/4/D	D	1870	F9Q	A	Y		05/05 ▸ 11/09	7701479114	**●526001**	SS	
2.0 dCi	JM1K	D	1995	M9R	M	Y		01/06 ▸	8200332040	**506902**	N	
2.0 dCi	JM1K	D	1995	M9R	A	Y		01/06 ▸	8200332040	**506902**	N	
Scénic III												
2.0 i 140 16V	JZ1/E/P	E	1997	M4R	A	Y		04/09 ▸	210102773R	**▲506965**	SS	
1.5 dCi 105,1.5 dCi 85	JZ0/7/A/B	D	1461	K9K	M	Y		04/09 ▸	7701478031	**506863**	SS	
1.5 dCi	JZ0/2/D, JZ1/G/M/W	D	1461	K9K	M	Y		04/09 ▸	7701478830	**▲506993**	SS	
1.5 dCi	JZ09	D	1461	K9K	A	Y		06/10 ▸	7701478830	**▲506993**	SS	
1.9 dCi	JZ0/J/N, JZ1/J/K/S	D	1870	F9Q	M	Y		04/09 ▸	7701478846	**▲526010**	SS	
2.0 dCi 160	JZ0L	D	1995	M9R	M	Y		04/09 ▸	8200332040	**506902**	N	
2.0 dCi 150	JZ0Y	D	1995	M9R	A	Y		04/09 ▸	8200332040	**506902**	N	
Scénic III Phase 2												
1.5 dCi	JZ14, JZ0/2/D	D	1461	K9K	M	Y		01/12 ▸	7701478830	**▲506993**	SS	
1.5 dCi	JZ09	D	1461	K9K	A	Y		01/12 ▸	7701478830	**▲506993**	SS	
Spider												
2.0 i 16V	EF0H	E	1998	F7R	M	Y		01/96 ▸	7701473365	**506019**	N	
Thalia												
1.4 i	LB0B	E	1390	K7J	M	N		01/01 ▸	8200146298	**506573**	CR	
Twingo I (93>98)												
1.2 i	S066, C06/6/7	E	1149	D7F	M	Y		07/96 ▸ 08/98	8200088663	**506580**	SS	
1.2 i	S066, C06/6/7	E	1149	D7F	A	Y		07/96 ▸ 08/98	8200088663	**506580**	SS	
1.2	C06/3/4, S06/3/4	E	1239	C3G	M	Y		03/93 ▸ 01/97	7701467642	**506599**	vvv	506600
1.2	C06/3/4, S06/3/4	E	1239	C3G	M	Y		03/93 ▸ 01/97	7701467153	**506486**	V	506312
Twingo II (98>2007)												
1.2 i GPL ▸011001	C066, S066	G	1149	D7F	M	Y		10/01 ▸	8200088663	**506580**	SS	
1.2 i 16V	C06/C/D/K, S06/C/K	E	1149	D4F	M	Y		10/00 ▸	8200042880	**506780**	SS	
1.2 i ▸011001	C066	E	1149	D7F	A	Y		10/01 ▸	8200088663	**506580**	SS	
1.2 i ▸011001	C06/6/8/G, S06/6/8	E	1149	D7F	M	Y		10/01 ▸	8200088663	**506580**	SS	
Twingo II (2007>)												
1.5 dCi	GN03, CN0/0/3	D	1461	K9K	M	Y		11/10 ▸ 12/11	7701478830	**▲506993**	SS	
Twingo III (2007>)												
1.2 i 16V,1.2 i TCE 16V	CN0/A/C	E	1149	D4F	M	Y		07/07 ▸	8200702750	**506968**	SS	
1.5 dCi	CN0E	D	1461	K9K	M	Y		07/07 ▸	7701478031	**506863**	SS	
Vel Satis (2002>2005)												
2.0 i Turbo 16V	BJ0/K/P	E	1998	F4R	M	Y		01/02 ▸	7701472182	**●506698**	SS	
2.0 i Turbo 16V	BJ0/K/P	E	1998	F4R	A	Y		01/02 ▸	7701472182	**●506698**	SS	
2.2 dCi 16V	BJ0/E/F/G/H/M	D	2188	G9T	M	Y		01/02 ▸	7701474190	**506709**	N	
2.2 dCi 16V	BJ0F	D	2188	G9T	A	Y		01/02 ▸	7701474190	**506709**	N	
3.0 dCi V6 24V	BJ0J	D	2958	P9X	A	Y		01/02 ▸	7701474006	**506728**	G	
Vel Satis (2005>)												
2.0 i Turbo 16V	BJ0W	E	1998	F4R	M	Y		02/05 ▸	7701472182	**●506698**	SS	
2.0 i Turbo 16V	BJ0W	E	1998	F4R	A	Y		02/05 ▸	7701472182	**●506698**	SS	
2.0 dCi FAP 16V	BJE3, BJRB	D	1995	M9R	M	Y		01/06 ▸	8200332040	**506902**	N	
2.2 dCi 16V	BJ0/H/M	D	2188	G9T	M	Y		02/05 ▸	7701474190	**506709**	N	
2.2 dCi 16V	BJ0F	D	2188	G9T	A	Y		02/05 ▸	7701474190	**506709**	N	

• **New** Nouveau **Nuevo** Novo **Nuovo** Nieuw **Neu** Yeni Новый Nou

		Type Ctr.		cc						OE	Valeo		
RENAULT (.../...)													
Vel Satis (2005>) (.../...)													
3.0 dCi V6 24V	*BJ0J*	D		2958	P9X	A	Y		02/05 ▸	7701474006	**506728**	G	
RENAULT													
Express (85>91)													
1.0	*F400*	E		956	C1C	M	Y		09/85 ▸ 08/91	7701466420	**506367**	V	506620
1.0	*F400*	E		956	C1C	M	Y		09/85 ▸ 08/91	7701466419	**506347**	V	
1.1	*F40/1/H*	E		1108	C1E	M	Y		09/85 ▸ 08/91	7701466420	**506367**	V	506620
1.1	*F40/1/H*	E		1108	C1E	M	Y		09/85 ▸ 08/91	7701466419	**506347**	V	
1.4,1.4 i	*F40/2/7/M*	E		1397	C3J, C1J, C2J	M	Y		09/85 ▸ 08/91	7701466420	**506367**	V	506620
1.4,1.4 i	*F40/2/7/M*	E		1397	C3J, C1J, C2J	M	Y		09/85 ▸ 08/91	7701466419	**506347**	V	
1.6 D	*F404*	D		1595	F8M	M	Y		09/85 ▸ 08/91	7701473365	**506019**	N	
Express (91>)													
1.1	*F401*	E		1108	C1E	M	Y		09/91 ▸ 08/94	7701466420	**506367**	V	506620
1.1	*F40/1/T*	E		1108	C1E	M	Y		09/91 ▸ 08/97	7701466419	**506347**	V	
1.2	*F40F*	E		1237	C1G	M	Y		09/91 ▸ 08/94	7701466420	**506367**	V	506620
1.2	*F40F*	E		1237	C1G	M	Y		09/91 ▸ 08/94	7701466419	**506347**	V	
1.2 i	*F406*	E		1239	C3G	M	Y		07/93 ▸ 08/97	7701467153	**506486**	V	506312
1.2 i	*F406*	E		1239	C3G	M	Y		07/93 ▸ 08/97	7701466419	**506347**	V	
1.4,1.4 i	*F40/A/D/S/U/V/Y*	E		1390	E7J, E6J	M	Y		09/91 ▸ 08/97	7701633125	**506099**	CR	
1.4 i	*F40/S/U*	E		1390	E7J	A	Y		09/91 ▸ 08/97	7701633125	**506099**	CR	
1.4 i	*F407*	E		1397	C3J	M	Y		09/91 ▸ 08/94	7701466420	**506367**	V	506620
1.4 i	*F407*	E		1397	C3J	M	Y		09/91 ▸ 08/94	7701466419	**506347**	V	
1.6 D	*F404*	D		1595	F8M	M	Y		09/91 ▸ 08/94	7701473365	**506019**	N	
1.9 D	*F40/E/N/P/R*	D		1870	F8Q	M	Y		09/91 ▸ 08/97	7701473365	**506019**	N	
Extra (85>91)													
1.0	*F400*	E		956	C1C	M	Y		09/85 ▸ 08/91	7701466420	**506367**	V	506620
1.0	*F400*	E		956	C1C	M	Y		09/85 ▸ 08/91	7701466419	**506347**	V	
1.1	*F401*	E		1108	C1E	M	Y		09/85 ▸ 08/91	7701466420	**506367**	V	506620
1.1	*F401*	E		1108	C1E	M	Y		09/85 ▸ 08/91	7701466419	**506347**	V	
1.4	*F402*	E		1397	C1J	M	Y		09/85 ▸ 08/91	7701466420	**506367**	V	506620
1.4	*F402*	E		1397	C1J	M	Y		09/85 ▸ 08/91	7701466419	**506347**	V	
Extra (91>97)													
1.2	*F40F*	E		1237	C1G	M	Y		09/91 ▸ 08/94	7701466419	**506347**	V	
1.2 i	*F406*	E		1239	C3G	M	Y		09/94 ▸ 08/97	7701467153	**506486**	V	506312
1.4,1.4 i	*F40/A/U*	E		1390	E6J, E7J	M	Y		09/91 ▸ 08/97	7701633125	**506099**	CR	
1.6 D	*F404*	D		1595	F8M	M	Y		09/91 ▸ 08/94	7701473365	**506019**	N	
1.9 D	*F40/E/N/R*	D		1870	F8Q	M	Y		09/91 ▸ 08/97	7701473365	**506019**	N	
Kangoo Extra (98>2003)													
1.2 i	*FC0A*	E		1149	D7F	M	Y		01/98 ▸	8200088663	**506580**	SS	
1.4 i	*FC0C*	E		1390	E7J	M	N		01/98 ▸	7700866518	**506564**	CR	
1.9 D	*FC0E*	D		1870	F8Q	M	Y		01/98 ▸	7701473365	**506019**	N	
Kangoo (97>2003)													
1.2 i	*FC0A, KC0A*	E		1149	D7F	M	Y		09/97 ▸	8200088663	**506580**	SS	
1.4 i	*FC0/C/H, KC0/C/H*	E		1390	E7J	M	N		09/97 ▸	7700866518	**506564**	CR	
1.4 i	*KC0H*	E		1390	E7J	A	N		10/99 ▸	7700866518	**506564**	CR	
1.6 i	*FC00, KC00*	E		1598	K7M	M	N		12/99 ▸	8200146298	**506573**	CR	
1.9 D,1.9 DTi	*FC0/D/E/U, KC0/D/E/U*	D		1870	F8Q, F9Q	M	Y		09/97 ▸	7701473365	**506019**	N	
000904 ▸ 000904													
Kangoo (2003>)													
1.2 i 16V	*FC0/5/T/W, KC0/5/T/W*	E		1149	D4F	M	Y		03/03 ▸	8200266950	**506780**	SS	
1.2 i	*FC0F, KC0F*	E		1149	D7F	M	Y		03/03 ▸	8200266947	**506729**	SS	
1.4 i	*FC0/B/M, KC0/B/M*	E		1390	K7J	M	N		03/03 ▸	8200146298	**506573**	CR	
1.4 i	*FC0/B/M, KC0/B/M*	E		1390	K7J	A	N		03/03 ▸	8200146298	**506573**	CR	
1.6 i 16V	*FC0/L/P/S, KC0/L/P/S*	E		1598	K4M	M	Y	20 teeth	03/03 ▸	8200146297	**506655**	CR	
1.6 i 16V	*FC0S, KC0S*	E		1598	K4M	A	Y	20 teeth	03/03 ▸	8200146297	**506655**	CR	

• **New** Nouveau **Nuevo** Novo **Nuovo** Nieuw **Neu** Yeni Новый Nou

Valeo

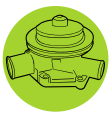

RENAULT (.../...)

Master (2006>)

2.5 dCi 100,2.5 dCi 120 2.5 dCi 146,2.5 dCi 150	*ED0/1/2/Y, ED4/1/2/Y, ED8 1/2/Y, ED9/1/2/Y, FD0/1/2 Y, FD2/1/2/Y, FD3/1/2/Y FD7/1/2/Y, FD8/1/2/Y FDA3, FDB3, FDC3, FD9/1 2/Y, HD0/1/2/Y, HD1/1/2/Y JD0/1/2/Y, JD1/1/2/Y UD0/1/2/Y, UD1/1/2/Y UD4/1/2/Y, UD5/1/2/Y UD6/1/2/Y, UD8/1/2/Y*	D	2464	G9U	M	Y		06/06 ▸	7701474190	**506709**	N	

Rapid (85>91)

1.0	*F400*	E	956	C1C	M	Y		09/85 ▸ 08/91	7701466420	**506367**	V	506620
1.0	*F400*	E	956	C1C	M	Y		09/85 ▸ 08/91	7701466419	**506347**	V	
1.1	*F40/1/H*	E	1108	C1E	M	Y		09/85 ▸ 08/91	7701466420	**506367**	V	506620
1.1	*F40/1/H*	E	1108	C1E	M	Y		09/85 ▸ 08/91	7701466419	**506347**	V	
1.4,1.4 i	*F40/2/7*	E	1397	C1J, C3J	M	Y		09/85 ▸ 08/91	7701466420	**506367**	V	506620
1.4,1.4 i	*F40/2/7*	E	1397	C3J, C1J	M	Y		09/85 ▸ 08/91	7701466419	**506347**	V	
1.6 D	*F404*	D	1595	F8M	M	Y		09/85 ▸ 08/91	7701473365	**506019**	N	

Trafic (80>89)

1.7	*T2W8, T3X8, T4V8, T4X8, T5W8, T5X8 TBZ8, P3X/8*	E	1721	F1N	M	Y		07/80 ▸ 02/89	7701473365	**506019**	N	
2.0 F029329 ▸	*PCX2, PCY2, T3V3, T5X2, T7W2, TBX2 TBZ2, TE12, TE22, TE92, V2W2, V4X2 V9X2, PAY/2*	E	1995	J5R	M	Y		▸ 02/89	7701465513	**506311**	N	
2.0 F029329 ▸	*T5X2, TBX2*	E	1995	J5R	A	Y		▸ 02/89	7701465513	**506311**	N	
2.0 ▸ F029328	*PCX2, PCY2, T3V3, T5X2, T7W2, TBX2 TBZ2, TE12, TE22, TE92, V2W2, V4X2 V9X2, PAY/2*	E	1995	J5R	M	Y		07/80 ▸	7701461006	**506073**	N	
2.0 ▸ F029328	*T5X2, TBX2*	E	1995	J5R	A	Y		07/80 ▸	7701461006	**506073**	N	
2.1 D	*PAY3, PCY3, T2W3, T3X3, T4V3, T4X3 T5W3, T5X3, T6W3, T7W3, T9X3, TAX3 TAZ3, TBX3, TBZ3, V2W3, V4X3, V5W3 V9X3, P3X/3*	D	2068	852	M	Y		07/80 ▸ 02/89	7701461336	**506074**	N	
2.5 D	*PCX4, PCY4*	D	2445	S8U	M	Y		07/83 ▸ 02/89	7701473784	**506106**	N	

Trafic (89>94)

1.7	*P358, T118, T128, T2B8, T318, T328 T358, T418, T428, T558, T5B8, P31 8*	E	1721	F1N	M	Y		03/89 ▸ 09/94	7701473365	**506019**	N	
2.0 890726 ▸	*PC92, PCG2, T2B2, T552, T7B2, TB12 TB22, TB42, TB52, TB62, TB92, TE92 V312, V412, V422, V492, V5B2, PC8 2*	E	1995	J5R	M	Y		07/89 ▸ 09/94	7701465513	**506311**	N	
2.0 ▸ 890726	*PC92, PCG2, T2B2, T552, T7B2, TB12 TB22, TB42, TB52, TB62, TB92, TE92 V312, V412, V422, V492, V5B2, PC8 2*	E	1995	J5R	M	Y		03/89 ▸ 07/89	7701461006	**506073**	N	
2.2 910703 ▸	*T35A, T5BA, T7CA, TB1A, TB2A, TB6A TB9A, TC9A, V31A, V41A, V42A, V49A V5BA, T31/A*	E	2165	J7T	M	Y		07/91 ▸ 09/94	7701465513	**506311**	N	
2.2 ▸ 910703	*T35A, T5BA, T7BA, T7CA, TB1A, TB2A TB6A, TB9A, TE1A, TE2A, TE9A, V31A V41A, V42A, V49A, V5BA, T31/A*	E	2165	J7T	M	Y		03/89 ▸ 07/91	7701461006	**506073**	N	
2.1 D	*PC93, PCG3, T113, T123, T2B3, T313 T323, T333, T353, T413, T423, T433 T553, T5B3, T7B3, TB13, TB23, TB33 TB43, TB53, TB63, TB93, V313, V423 V5B3, PC8/3*	D	2068	J8S	M	Y		03/89 ▸ 09/94	7701467223	**506072**	N	
2.1 D	*P313, P353*	D	2068	852	M	Y		03/89 ▸ 09/94	7701461336	**506074**	N	

• **New** Nouveau **Nuevo** Novo **Nuovo** Nieuw **Neu** Yeni Новый Nou

Valeo

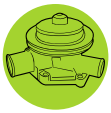

RENAULT (.../...)

Trafic (89>94) (.../...)

2.5 D	T2B/4, T41/4/B, T434, T554, T42/4/B T7B/4/B, TB1/4/B, TB34, TB44, TB54 TB64, TB2/4/B, TC94, TB9/4/B, V31 4/B, V42/4/B, V49/4/B, V5B/4/B	D	2499	S8U	M	Y		03/89 ▸ 09/94	7701473784	**506106**	N	

Trafic (95>97)

2.2 i	T12E, T2BE, T31E, T32E, T35E, T41E T42E, T55E, T5BE, T7CE, TB1E, TB2E TB4E, TB5E, TB6E, TB9E, TC9E, TMBE V31E, V42E, V49E, V5BE, T11/E	E	2165	J7T	M	Y		10/94 ▸ 08/97	7701465513	**506311**	N	
2.1 D	PC9F, PCGF, T11F, T12F, T2BF, T31F T32F, T33F, T35F, T41F, T42F, T43F T55F, T5BF, TMBF, PC8/F	D	2068	J8S	M	Y		10/94 ▸ 08/97	7701467223	**506072**	N	
2.5 D	TB1G, TB2G, TB3G, TB4G, TB5G, TB6G TB9G, TC7G, TC9G, TG1G, TH1G, TJ1G V31G, V42G, V49G, V5BG, T55/G	D	2499	S8U	M	Y		10/94 ▸ 08/97	7701473784	**506106**	N	

Trafic (97>2001)

1.9 D	TF1J, T55/J, TF2/J/L, TF3/J/L, THB J/L	D	1870	F8Q	M	Y		09/97 ▸ 03/01	7701473365	**506019**	N	
2.5 D	T7BG, TB2G, TB9G, TC9M, T55/G/M TCJ/G/M, TF1/G/M, TF2/G/M, TF3/G/M V31/G/M, V5B/G/M	D	2499	S8U	M	Y		09/97 ▸ 03/01	7701473784	**506106**	N	

Trafic (2001>)

2.0 i 16V	FL0A, JL0A, EL0/A	E	1998	F4R	M	Y		04/01 ▸	7701472182	●**506698**	SS	
1.9 dCi	FL0/B/C, JL0/B/C	D	1870	F9Q	M	Y		04/01 ▸	7701472182	●**506698**	SS	
2.5 dCi 16V	FL0D, JL0D, EL0/D	D	2464	G9U	M	Y		09/02 ▸	7701474190	**506709**	N	

Trafic (2006>)

2.0 dCi	EL0/H/M, FL0/H/M, JL0/H/M	D	1995	M9R	M	Y		07/06 ▸	8200332040	**506902**	N	
2.5 dCi	EL0/J/R/V, FL0/J/R/V, JL0 J/R/V	D	2464	G9U	M	Y		07/06 ▸	7701474190	**506709**	N	

RVI

Mascott

2.8 D,2.8 TD,2.8 dti		D	2800	8140-43C, 8140-63, 8140-43S	M	Y		07/99 ▸ 06/04	5001853804	**506879**	N	

ROVER

25 (99>2003)

1.4 i 16V		E	1396	14K4F4	M	Y		12/99 ▸	GWP333	**506114**	CR	
1.6 i 16V		E	1588	16K4F4	M	Y		12/99 ▸	GWP333	**506114**	CR	
1.6 i 16V		E	1588	16K4F4	A	Y		12/99 ▸	GWP333	**506114**	CR	
1.8 i 16V		E	1796	18K16	M	Y		12/99 ▸	GWP333	**506114**	CR	
1.8 i 16V		E	1796	18K4, 18K16	A	Y		12/99 ▸	GWP333	**506114**	CR	
2.0 D		D	1996	20T2N	M	Y		12/99 ▸	GWP2709	**506320**	N	

25 (2004>)

1.1 i 16V		E	1119	11K4F4	M	Y		08/04 ▸	PEB102510	**506696**	CR	
1.4 i 16V		E	1396	14K4F4	M	Y		08/04 ▸	PEB102510	**506696**	CR	
1.6 i 16V		E	1588	16K4F4	M	Y		08/04 ▸	PEB102510	**506696**	CR	
1.6 i 16V		E	1588	16K4F4	A	Y		08/04 ▸	PEB102510	**506696**	CR	
1.8 i 16V		E	1796	18K4	A	Y		08/04 ▸	PEB102510	**506696**	CR	
2.0 Di		D	1994	20T2N	M	Y		08/04 ▸	PEB102420	**506320**	N	
2.0 D		D	1996	20T2N	M	Y		08/04 ▸	PEB102420	**506320**	N	

45 (2000>2004)

1.4 i 16V	RTC/L/W, RTM/L/W, RTS/L/W RTZ/L/W	E	1396	14K4F4	M	Y		01/00 ▸	GWP333	**506114**	CR	

• **New** Nouveau **Nuevo** Novo **Nuovo** Nieuw **Neu** Yeni Новый Nou

ROVER (.../...)

45 (2000>2004) (.../...)

1.6 i 16V	*RTC/L/W, RTS/L/W, RTZ/L/W*	E	1589	16K4F4	M	Y		01/00 ▸	GWP333	**506114**	CR	
1.8 i 16V	*RTC/L/W, RTS/L/W, RTZ/L/W*	E	1796	18K4F	M	Y		01/00 ▸	GWP333	**506114**	CR	
1.8 i 16V	*RTC/L/W, RTS/L/W, RTZ/L/W*	E	1796	18K4F	A	Y		01/00 ▸	GWP333	**506114**	CR	
2.0 i V6 24V	*RTC/L/W, RTZ/L/W*	E	1997	20K6F	M	Y		01/00 ▸	GWP2602	**506842**	SS	
2.0 i V6 24V	*RTC/L/W, RTZ/L/W*	E	1997	20K6F	A	Y		01/00 ▸	GWP2602	**506842**	SS	
2.0 iDT	*RTC/L/W, RTM/L/W, RTS/L/W RTZ/L/W*	D	1994	20T2N	M	Y		01/00 ▸	GWP2709	**506320**	N	

45 (2004>)

1.4 i 16V	*RTMW, RTSW, RTC/L/W, RTZ L/W*	E	1396	14K4F4	M	Y		06/04 ▸	PEB102510	**506696**	CR	
1.4 i 16V	*RTMW, RTSW, RTC/L/W, RTZ L/W*	E	1396	14K4F4	M	Y		06/04 ▸	PEB10051	**506114**	CR	
1.6 i 16V	*RTC/L/W, RTS/L/W, RTZ/L/W*	E	1589	16K4F4	M	Y		06/04 ▸	PEB102510	**506696**	CR	
1.6 i 16V	*RTC/L/W, RTS/L/W, RTZ/L/W*	E	1589	16K4F4	M	Y		06/04 ▸	PEB10051	**506114**	CR	
1.8 i 16V	*RTC/L/W, RTS/L/W, RTZ/L/W*	E	1796	18K4F	M	Y		06/04 ▸	PEB102510	**506696**	CR	
1.8 i 16V	*RTC/L/W, RTS/L/W, RTZ/L/W*	E	1796	18K4F	M	Y		06/04 ▸	PEB10051	**506114**	CR	
1.8 i 16V	*RTC/L/W, RTS/L/W, RTZ/L/W*	E	1796	18K4F	A	Y		06/04 ▸	PEB102510	**506696**	CR	
1.8 i 16V	*RTC/L/W, RTS/L/W, RTZ/L/W*	E	1796	18K4F	A	Y		06/04 ▸	PEB10051	**506114**	CR	
2.0 i V6 24V	*RTC/L/W, RTZ/L/W*	E	1997	20K6	M	Y		06/04 ▸	PEB102240	**506842**	SS	
2.0 i V6 24V	*RTC/L/W, RTZ/L/W*	E	1997	20K6	A	Y		06/04 ▸	PEB102240	**506842**	SS	
2.0 Di	*RTMW, RTSW, RTC/L*	D	1994	20T2N	M	Y		06/04 ▸	PEB102420	**506320**	N	
2.0 D	*RTC/L/W, RTM/L/W, RTS/L/W, RTZ/L/W*	D	1996	20T2N	M	Y		06/04 ▸	PEB102420	**506320**	N	

75 (99>2003)

1.8 i 16V	*R40*	E	1796	18K4F	M	Y		02/99 ▸	GWP333	**506114**	CR	
1.8 i 16V	*R40*	E	1796	18K4F	A	Y		02/99 ▸	GWP333	**506114**	CR	
2.0 i V6 24V	*R40*	E	1997	20K6F	M	Y		02/99 ▸	GWP2602	**506842**	SS	
2.0 i V6 24V		E	1997	20K6F	A	Y		02/99 ▸	GWP2602	**506842**	SS	
2.5 i V6 24V	*R40*	E	2497	25KV6F-175, 25KV6-177	M	Y		02/99 ▸	GWP2602	**506842**	SS	
2.5 i V6 24V	*R40*	E	2497	25KV6F-175, 25KV6-177	A	Y		02/99 ▸	GWP2602	**506842**	SS	
2.0 CDT 16V	*R40*	D	1951	M47R	M	Y	CH: 5	02/99 ▸	GWP2604	**506710**	vvv	
2.0 CDT 16V	*R40*	D	1951	M47R	A	Y	CH: 5	02/99 ▸	GWP2604	**506710**	vvv	

75 (2004>)

1.8 T 16V,1.8 i 16V	*RJHL*	E	1796	18K4K, 18K4F	M	Y		03/04 ▸	PEB102510	**506696**	CR	
1.8 T 16V,1.8 i 16V		E	1796	18K4K, 18K4F	A	Y		03/04 ▸	PEB102510	**506696**	CR	
2.0 i V6 24V		E	1997	20K6F	M	Y		03/04 ▸	PEB102240	**506842**	SS	
2.0 i V6 24V		E	1997	20K6F	A	Y		03/04 ▸	PEB102240	**506842**	SS	
2.5 i V6 24V		E	2497	25KV6-177	M	Y		03/04 ▸	PEB102240	**506842**	SS	
2.5 i V6 24V		E	2497	25KV6-177	A	Y		03/04 ▸	PEB102240	**506842**	SS	
2.0 CDT 16V,2.0 CDTi 16V		D	1951	M47R, 204D2	M	Y	CH: 5	03/04 ▸	PEB102440	**506710**	vvv	
2.0 CDT 16V,2.0 CDTi 16V		D	1951	M47R, 204D2	A	Y	CH: 5	03/04 ▸	PEB102440	**506710**	vvv	

100

1.1,1.1 i	*XPD/N, XPF/N/W, XPMN, XPH N/W, XPY/N/W*	E	1129	11K2B, 11K2A, 11K2D	M	Y		09/90 ▸	GWP336	**506018**	CR	
1.4,1.4 i	*XPM/N, XPYW, XPZW, XPS/N W*	E	1396	14K2D, 14K2A	M	Y		09/90 ▸	GWP336	**506018**	CR	
1.4 i 16V	*XPSN, XPWN*	E	1396	14K4D, 14K4F4, 14K4C	M	Y		09/90 ▸ 12/92	GWP333	**506114**	CR	
1.4 i	*XPYW, XPZW*	E	1396	14K2D	A	Y		02/92 ▸	GWP336	**506018**	CR	
1.4 D	*XPMW, XPYW, XPZW, XPF/N/W*	D	1360	10FTO FO	M	Y		05/92 ▸	GWP341	**506035**	CR	
1.5 D	*XPF/N/W, XPH/N/W, XPZ/N/W*	D	1527	VJZ	M	Y		01/95 ▸	GWP346	**506290**	CR	

200 (84>90)

213	*XHSL, XHYL, XHM/L*	E	1342	EV	M	Y		▸ 09/90	GWP1143	**506028**	CR	
213	*XHYL*	E	1342	EV	A	Y		▸ 09/90	GWP1143	**506028**	CR	
216	*XHWL, XHYL, XHZL, XHS/L*	E	1598	H16B-EFI, H16A, H16B	M	Y		03/85 ▸ 09/90	GWP183	**506004**	CR	

200 (89>95)

214	*XWH/N/W, XWWN, XWM/N/W*	E	1396	14K2A, 14K2D	M	Y		10/89 ▸ 03/96	GWP336	**506018**	CR	
214	*XWM/B/N/W, XWYW, XWS/N/W*	E	1396	14K4D, 14K4F4, 14K4C, 14K2D	M	Y		10/89 ▸ 03/96	GWP333	**506114**	CR	
214	*XWMW*	E	1396	14K4C		Y		10/89 ▸ 09/92	GWP333	**506114**	CR	

• **New** Nouveau **Nuevo** Novo **Nuovo** Nieuw **Neu** Yeni Новый Nou

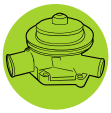

ROVER (.../...)

200 (89>95) (.../...)

216	XWS/W, XWW/B/C/N/W, XWYW, XWX/N/W	E	1590	D16Z2, D16A9, D16A8, D16A7	M	Y		10/89 ▸ 03/96	GWP2163	**506045**	CR	
216	XWYW	E	1590	D16Z2, D16A7	A	Y		10/89 ▸ 03/96	GWP2163	**506045**	CR	
220	XWSW, XWJ/C, XWX/C/N	E	1994	20T4G, 20T4H, 20M4F	M	Y		06/91 ▸ 03/96	GWP193	**506320**	N	
218	XWMW, XWYW	D	1769	IOCV2L	M	Y		04/91 ▸ 03/96	GWP337	**506014**	CR	
218	XWMW, XWSW, XWH/W	D	1905	IOCU4N, ICU4N	M	Y		04/91 ▸ 03/96	GWP338	**506014**	CR	

200 (95>99)

211	RFH/N/W	E	1113	11K2F	M	Y		01/98 ▸ 11/99	GWP336	**506018**	CR	
214	RFM/N/W	E	1396	14K4F4	M	Y		11/95 ▸	GWP333	**506114**	CR	
214	RFHN	E	1396	14K2F	M	Y		11/95 ▸	GWP336	**506018**	CR	
216	RFMW, RFYW	E	1589	16K4F4	M	Y		11/95 ▸	GWP333	**506114**	CR	
216	RFYW	E	1589	16K4F4	A	Y		10/96 ▸	GWP333	**506114**	CR	
220	RFWN	E	1796	18K16	M	Y		10/96 ▸ 11/99	GWP333	**506114**	CR	
220	RFH/W, RFM/M/W/Y	D	1994	20T2N, 20T2R	M	Y		11/95 ▸	GWP347	**506320**	N	

200 (96>99)

Cabriolet,Coupé	XWMB, XWWC	E	1589	16K4F4	M	Y		03/96 ▸	GWP333	**506114**	CR	
Cabriolet,Coupé	XWMB, XWWC	E	1589	16K4F4	A	Y		03/96 ▸	GWP333	**506114**	CR	
Coupé	XWWC	E	1796	18K4K	M	Y		03/96 ▸	GWP333	**506114**	CR	

400 (90>95)

414	XWSL, XWYL, XWM/L	E	1396	14K4C, 14K4F4, 14K4D	M	Y		03/90 ▸	GWP333	**506114**	CR	
416	XWSL, XWM/L, XWY/L/T, XWZ/L/T	E	1590	D16Z2, D16A8, D16A7, D16A9	M	Y		03/90 ▸	GWP2163	**506045**	CR	
416	XWSL, XWYL, XWZL, XWM/L	E	1590	D16Z2, D16A9, D16A7, D16A8	A	Y		03/90 ▸	GWP2163	**506045**	CR	
420	XWS/L, XWYL, XWX/L/T	E	1994	20T4G, 20T4H	M	Y		10/92 ▸	GWP193	**506320**	N	
418	XWSL, XWM/L, XWZL, XWY/L/T	D	1769	ICV2L, IOCV2L	M	Y		03/91 ▸	GWP337	**506014**	CR	
418	XWML, XWSL	D	1905	IOCU4N	M	Y		10/92 ▸	GWP338	**506014**	CR	

400 (95>)

414	RTH/W, RTM/L/W	E	1396	14K4F4	M	Y		05/95 ▸	GWP333	**506114**	CR	
416	RTMW, RTSL, RTC/W	E	1589	16K4F4	M	Y		05/95 ▸	GWP333	**506114**	CR	
416	RTCW, RTLL	E	1590	D16Y3E	A	Y		05/95 ▸	GWP2163	**506045**	CR	
▸ D16Y3E199999												
420	RTMW, RTSW, RTZW, RTC/L/W	E	1994	20T4H	M	Y		11/95 ▸	GWP193	**506320**	N	
420	RTMW, RTSW, RTZW, RTC/W	D	1994	20T2N, 20T2R	M	Y		11/95 ▸	GWP347	**506320**	N	
▸ YD471063												

600

618	RHSL, RHYL, RHM/L	E	1850	F18A3	M	Y		03/96 ▸	GWP345	**506321**	CR	
618	RHSL, RHYL	E	1850	F18A3	A	Y		03/96 ▸	GWP345	**506321**	CR	
620	RHWL	E	1994	20T4G	M	Y		07/94 ▸	GWP193	**506320**	N	
620	RHSL, RHYL, RHZL, RHM/L	E	1997	F20Z1, F20Z2	M	Y		04/93 ▸	GWP345	**506321**	CR	
144845 ▸												
620	RHZL	E	1997	F20Z1	M	Y		07/95 ▸ 06/00	PEB102010	**506320**	N	
620	RHYL, RHZL	E	1997	F20Z1	A	Y		04/93 ▸	GWP345	**506321**	CR	
144845 ▸												
620	RHYL	E	1997	F20Z1	A	Y		07/95 ▸ 06/00	PEB102010	**506320**	N	
623	RHWL	E	2259	H23A3	M	Y		10/93 ▸	GWP343	**506322**	CR	
623	RHWL	E	2259	H23A3	A	Y		10/93 ▸	GWP343	**506322**	CR	
620	RHSL, RHYL, RHZL, RHM/L	D	1994	20T2N	M	Y		12/94 ▸ 06/00	PEB102010	**506320**	N	

800 (86>91)

825	XSZL	E	2493	C25A2	M	Y		09/86 ▸ 02/88	GWP330	**506540**	SS	
825	XSZL	E	2493	C25A2	A	Y		09/86 ▸ 02/88	GWP330	**506540**	SS	
827	XSVW, XSZL	E	2675	C27A2, C27A1	M	Y		09/87 ▸ 09/91	GWP330	**506540**	SS	
827	XSVW, XSZL	E	2675	C27A1, C27A2	A	Y		09/87 ▸ 09/91	GWP330	**506540**	SS	
825	XSH/L/W, XSS/L/W	D	2498	97A	M	Y		07/89 ▸ 09/91	GWP2162	**506673**	N	506281

800 (91>98)

820	RSH/L/W, RSWL, RSS/L/W	E	1994	20T4H, 20T4GG	M	Y		10/91 ▸ 09/98	GWP193	**506320**	N	
820	RSH/L/W, RSS/L/W	E	1994	20T4H	A	Y		10/91 ▸ 09/98	GWP193	**506320**	N	
827	RSC/C/L, RSS/L/W	E	2675	C27A2, C27A1	M	Y		10/91 ▸ 12/95	GWP330	**506540**	SS	
827	RSC/C/L/W, RSS/L/W	E	2675	C27A1, C27A2	A	Y		10/91 ▸ 12/95	GWP330	**506540**	SS	

• **New** Nouveau **Nuevo** Novo **Nuovo** Nieuw **Neu** Yeni Новый Nou

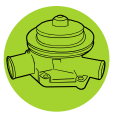

Valeo

Water pump
Pompe à eau
Bomba de água
Bomba de água
Pompa acqua
Waterpomp

Wasserpumpen
Pompa wodna
Vízpumpa
Su pompasi
ВОДЯНОЙ НАСОС

Vodní pumpa
Pompa de apă

			Type Ctr.		cc						OE	Valeo		
ROVER (.../...)														
800 (91>98) (.../...)														
825	*RSH/L/W, RSS/L/W*	D		2498	97A	M	Y		10/91 ▸ 09/98	GWP2162	**506673**	N	506281
Allegro													
1100	*AC2S*	E		1098	10H		Y		05/73 ▸ 12/80	GWP134	**506010**	N	
1300	*AE4S*	E		1275	12H		Y		05/73 ▸ 07/83	GWP134	**506010**	N	
1000				-			Y		12/80 ▸ 07/83	GWP134	**506010**	N	
Maestro													
1.3	*XCHW, XCJW, XCMW, XCRW, XCSW, XCD/W*	E		1275	12HE, 12H, 12H959, 12HF 12HC32, 12HC34, 12HA20 12HA04	M	Y		03/83 ▸ 10/94	GWP188	**506016**	N	
1.6	*XCPW, XCSW, XCTW, XCWW, XCM/W*	E		1598	16HC37, 16H, ROVE10, 16HA03 16HB77, 16H956	M	Y		03/83 ▸ 04/92	GWP183	**506004**	CR	
1.6	*XCSW*	E		1598	16HA36, 16HC38, 16HA01, 16H	A	Y		10/83 ▸ 1992	GWP183	**506004**	CR	
2.0,2.0 i,2.0 i Turbo	*XCTW*	E		1994	20HB63, 20HC78, 20HA50 20HA51	M	Y		03/83 ▸ 09/91	GWP185	**506025**	N	
Metro													
1000	*XBFN, XBHN, XBLN, XBPN, XBA/N, XFD N/W, XFH/N/W, XFYW, XFM/N/W*	E		998	99H, 99H962P, 99H929P 99H907P	M	Y		10/80 ▸ 09/90	GWP134	**506010**	N	
1.1,1.1 i	*XPD/N/W, XPH/N/W, XPM/N/W*	E		1129	11K2A, 11K2D, 11K2B	M	Y		05/90 ▸ 01/95	GWP336	**506018**	CR	
1.1	*XPD/N, XPH/N/W, XPM/N/W*	E		1129	11K2A	M	Y		09/90 ▸ 09/92	GWP134	**506010**	N	
1300,1300 Turbo	*XBHN, XBRN, XBZN, XBG/N XFH/N/W, XFWN, XFXD XFYW, XFZW, XFM/N/W*	E		1275	12H, 12HC14, 12H996AA 12H959AA, 12H907AA, 12HD26 12HC15	M	Y		02/81 ▸ 09/90	GWP134	**506010**	N	
1300	*XFMN, XFSN*	E		1275	12H907AA	A	Y		07/86 ▸ 09/90	GWP134	**506010**	N	
1.4,1.4 i	*XPM/N/W, XPS/N/W, XPZW XPY/N/W*	E		1396	14K2D, 14K2B, 14K2A	M	Y		05/90 ▸ 01/95	GWP336	**506018**	CR	
1.4	*XPSN, XPZW*	E		1396	14K2A	M	Y		09/90 ▸ 09/92	GWP134	**506010**	N	
1.4 i	*XPH/N/W, XPM/N/W, XPYW, XPZW, XPS/N W*	E		1396	14K2D	A	Y		02/92 ▸ 01/95	GWP336	**506018**	CR	
1.4 D	*XPF/N/W, XPH/N/W, XPZ/N/W*	D		1360	10FTO FO	M	Y		05/92 ▸ 01/95	GWP341	**506035**	CR	
Mini													
850	*XK2S*	E		848	ROVE12, 8AH, 85H	M	Y		10/80 ▸ 09/82	GWP186	**506010**	N	
850		E		848	8AH	A	Y		11/67 ▸ 1969	GWP134	**506010**	N	
970		E		970	9FC	M	Y		1963 ▸ 1965	GWP134	**506010**	N	
1000	*XFNN, XL2S*	E		998	99H, 99HG31, 9F, 9FA	M	Y		10/80 ▸ 08/90	GWP186	**506010**	N	
1000		E		998	9AG, 99H, ROVE13	A	Y		10/80 ▸ 08/90	GWP186	**506010**	N	
1070		E		1071	ROVE14	M	Y		1963 ▸ 1965	GWP134	**506010**	N	
1100	*XC2S*	E		1098	10H	M	Y		10/80 ▸ 09/82	GWP186	**506010**	N	
1.3,1.3 i,1275	*XNN/A/B, XNY/A/B*	E		1275	12A2B, 12A2D, 12A2E, 12A2A 12FA, 12H	M	Y		09/90 ▸	GWP187	**506010**	N	
1.3 i	*XNW/A*	E		1275	12A2L	M	Y		10/96 ▸ 1999	GWP188	**506016**	N	
1.3	*XNW/A*	E		1275	12A2B	A	Y		06/92 ▸	GWP186	**506010**	N	
Montego													
1300	*XEM/L, XESL, XEH/L*	E		1275	12HA37	M	Y		05/84 ▸	GWP151	**506016**	N	
1600	*XEM/L/M, XEWL, XES/L/M*	E		1598	16HA35S, 16HA35	M	Y		05/84 ▸	GWP183	**506004**	CR	
SD1													
2.0	*RRAW*	E		1994	20V973	M	Y		09/86 ▸ 10/86	GWP134	**506010**	N	
2.3	*RRHW*	E		2350	PE146-10C	M	Y		07/86 ▸ 12/81	GWP134	**506010**	N	
2.6	*RRFW*	E		2597	PE166-12C	M	Y		1987 ▸ 05/84	GWP134	**506010**	N	
2.6	*RRMW*	E		2597	PE166-13C	A	Y		1987 ▸ 1987	GWP134	**506010**	N	
Streetwise													
1.4 i 16V		E		1396	14K4F4	M	Y		08/03 ▸	PEB102510	**506696**	CR	
1.6 i 16V		E		1588	16K4F4	M	Y		08/04 ▸	PEB102510	**506696**	CR	
1.8 i 16V		E		1796	18K4	A	Y		08/04 ▸	PEB102510	**506696**	CR	

• **New** Nouveau **Nuevo** Novo **Nuovo** Nieuw **Neu** Yeni Новый Nou

Valeo

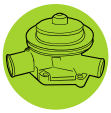

ROVER (.../...)

Streetwise (.../...)

2.0 D	D	1996	20T2N	M	Y		09/03 ▸	PEB102420	**506320**	N	

SAAB

9-3 (98>2003)

2.0 i 16V,2.0 i Turbo 16V	E	1985	B204L, B204I	M	Y		04/98 ▸	8822793	**506526**	SS	
2.0 i 16V,2.0 i Turbo 16V	E	1985	B204I, B204L	A	Y		04/98 ▸	8822793	**506526**	SS	
2.3 i 16V	E	2290	B234I	M	Y		04/98 ▸	8822793	**506526**	SS	
2.3 i 16V	E	2290	B234I	A	Y		04/98 ▸	8822793	**506526**	SS	
2.2 TiD	D	2172	X22DTH	M	Y		05/98 ▸	4772711	**506657**	N	

9-3 (2002>)

1.8 i 16V	E	1796	Z18XE	M	Y		11/03 ▸	90543935	**506656**	CR	
1.8 t Turbo 16V *YS/3FB/3FD/3FF/3FH* 2.0 t Turbo 16V	E	1998	B207E, B207L, B207R	M	Y		01/05 ▸	93181118	**506839**	N	
1.8 t Turbo 16V *YS/3FB/3FD/3FF/3FH* 2.0 t Turbo 16V	E	1998	B207E, B207R, B207L	A	Y		01/05 ▸	93181118	**506839**	N	
2.8 t V6 24V	E	2792	B284L	M	Y		06/05 ▸	12566029	**506866**	N	
2.8 t V6 24V	E	2792	B284L	A	Y		06/05 ▸	12566029	**506866**	N	
1.9 TiD,1.9 TiD 16V	D	1910	Z19DTH, Z19DT	M	Y		06/04 ▸	93179114	**506590**	SS	
1.9 TiD 16V	D	1910	Z19DTH	A	Y		06/04 ▸	93179114	**506590**	SS	
2.2 TiD 16V *YS/3FB/3FD*	D	2171	D223L-125	M	Y		09/02 ▸ 12/03	90540478	**506657**	N	

9-5 (97>2001)

2.0 i Turbo 16V *640*	E	1985	B205R, B205E	M	Y		09/97 ▸ 08/01	5960414	**506526**	SS	
2.0 i Turbo 16V *640*	E	1985	B205R, B205E	A	Y		09/97 ▸ 08/01	5960414	**506526**	SS	
2.3 i Turbo 16V *640, EH45G*	E	2290	B235E, B235R	M	Y		09/97 ▸ 08/01	5960414	**506526**	SS	
2.3 i Turbo 16V *640*	E	2290	B235E, B235R	A	Y		09/97 ▸ 08/01	5960414	**506526**	SS	
3.0 i V6 Turbo 24V *640*	E	2962	B308E	A	Y		01/98 ▸ 08/01	4770970	**506527**	N	

9-5 (2001>2004)

2.0 i Turbo 16V	E	1985	B205E-D4, B205E-E2	M	Y		09/01 ▸	5960414	**506526**	SS	
2.0 i Turbo 16V	E	1985	B205E-D4, B205E-E2	A	Y		09/01 ▸	5960414	**506526**	SS	
2.3 T Turbo 16V,2.3 i Turbo 16V	E	2290	B235E, B235R-E2, B235R-D4 B235L-D4, B235L-E2	M	Y		09/01 ▸	5960414	**506526**	SS	
2.3 T Turbo 16V,2.3 i Turbo 16V	E	2290	B235L-D4, B235L-E2, B235R-D4 B235R-E2, B235E	A	Y		09/01 ▸	5960414	**506526**	SS	
2.2 TiD	D	2171	D223L	M	Y		02/02 ▸	4772711	**506657**	N	
2.2 TiD	D	2171	D223L	A	Y		02/02 ▸	4772711	**506657**	N	

9-5 (FL) (2005>)

2.0 i Turbo 16V	F	1985	B205L-FF	M	Y		02/06 ▸	5960414	**506526**	SS	
2.0 i Turbo 16V	F	1985	B205L-FF	A	Y		02/06 ▸	5960414	**506526**	SS	
2.0 i Turbo 16V	E	1985	B205E-E4	M	Y		02/06 ▸	5960414	**506526**	SS	
2.0 i Turbo 16V	E	1985	B205E-E4	A	Y		02/06 ▸	5960414	**506526**	SS	
2.3 i Turbo 16V	E	2290	B235E, B235R	M	Y		11/05 ▸	5960414	**506526**	SS	
2.3 i Turbo 16V	E	2290	B235R, B235E	A	Y		11/05 ▸	5960414	**506526**	SS	
1.9 TiD Turbo 16V	D	1910	Z19DTH	M	Y		11/05 ▸	93179114	**506590**	SS	
1.9 TiD Turbo 16V	D	1910	Z19DTH	A	Y		11/05 ▸	93179114	**506590**	SS	

99

1.9	E	1854	SAAB01		Y		11/67 ▸ 1974	7507460	**506040**	N	
2.0,2.0 Turbo *99/CM/CM2/CM3/CM4/TM2/TM3 TM4/TM5*	E	1985	B20C, B20S, B20T	M	Y		08/74 ▸ 1981	7507460	**506040**	N	
2.0,2.0 i *BL25C, 99/GLE/TA2/TA3/TA4 TA5*	E	1985	B201C, B20T, B20I	A	Y		08/74 ▸ 1985	7507460	**506040**	N	
2.0,2.0 i *99/EMS, BG/21S/22S/41S*	E	1985	B20C, SAAB02, B20I, B20T		Y		12/67 ▸ 1983	7507460	**506040**	N	

• **New** Nouveau **Nuevo** Novo **Nuovo** Nieuw **Neu** Yeni Новый Nou

		Type Ctr.	cc					OE	Valeo			
SAAB (.../...)												
900 (79>93)												
2.0,2.0 T Turbo 2.0 T Turbo 16V,2.0 i 2.0 i 16V	*AC/35D/45D/55D/75D, AE43S AD/35S/55S/75L/75S, AG 31S/33S/42S/51S/52S, AH 25J/35J, AL/35C/44C/45C AS33S, AM/25J/35J/45J 55J/55T, AT/34S/35L/35S 44S/45L/45S/54S/55L/55S 75L*	E	1985	B20T, B201I, B202L, B201S B202S, B20S, B202I, B201T B201C, B20I, B20C	M	Y		10/80 ▸ 06/93	8817900	**506040**	N	
2.0,2.0 T Turbo 2.0 T Turbo 16V,2.0 i 2.0 i 16V	*AC/36D/46D/56D/76D, AD 36S/56S/76L, AH26J, AL56C AE/43/66S, AM/36J/46J 56J, AT/36S/44/46S/56S*	E	1985	B201S, B202I, B20S, B201I B20I, B202S, B202L, B201C	A	Y		10/81 ▸ 06/93	8817900	**506040**	N	
900 (93>)												
2.0 16V,2.0 Turbo 16V	*DC/35A/55A, DD/35N/55N DX/35J/35N/55J/55N/75N*	E	1985	B204I, B206I, B204L	M	Y		07/93 ▸ 02/98	9321951	**506526**	SS	
2.0 16V	*DC/38A/58A, DX/38J/58J*	E	1985	B206I, B204I	A	Y		07/93 ▸ 02/98	9321951	**506526**	SS	
2.3 16V	*DC/35B/55B, DX/35B/55B 75B*	E	2290	B234I	M	Y		07/93 ▸ 02/98	9321951	**506526**	SS	
2.3 16V	*DC/38B/58B, DX/38B/58B*	E	2290	B234I	A	Y		07/93 ▸ 02/98	9321951	**506526**	SS	
2.5 V6	*DC55V*	E	2498	B258I	M	Y		07/93 ▸ 02/98	8821944	**506527**	N	
2.5 V6	*DC/58V, DX/55V/58V*	E	2498	B258I	A	Y		07/93 ▸ 02/98	8821944	**506527**	N	
9000												
2.0 Turbo 16V,2.0 i 16V	*CC/45D, CT55L, CD/45L/55D 55L*	E	1985	B202I, B202L	M	Y		06/84 ▸ 07/93	8817918	**506133**	N	
2.0 i 16V	*CC/65J, CX/45J/65J*	E	1985	B202I, B204I	M	Y		07/93 ▸ 07/98	9321688	**506528**	N	
2.0 Turbo 16V,2.0 i 16V	*CC/48D/58D, CT58L, CD/48L 58L*	E	1985	B202L, B202I	A	Y		06/84 ▸ 07/93	8817918	**506133**	N	
2.3 T Turbo 16V,2.3 i 16V	*CC/45B/55B/65B, CD/45M 45U/55M/56M/65M/65U, CX 45B/45M/45U/65B/65M/65U*	E	2290	B234E, B234L, B234I	M	Y		01/90 ▸ 07/98	9321688	**506528**	N	
2.3 T Turbo 16V	*CD65R, CX65R*	E	2290	B235R	M	Y		07/93 ▸ 07/98	8821944	**506527**	N	
2.3 T Turbo 16V,2.3 i 16V	*CC/48B/58B/68B, CD/48M 58M/68M/68U, CX/48M/68B 68M/68U*	E	2290	B234E, B234L, B234I	A	Y		01/90 ▸ 07/98	9321688	**506528**	N	
3.0 i V6	*CX/45W/65W*	E	2962	B308I	M	Y		07/94 ▸ 07/98	8821944	**506527**	N	
3.0 i V6	*CX/48W/68W*	E	2962	B308I	A	Y		07/94 ▸ 07/98	8821944	**506527**	N	
SANTANA												
Vitara												
1.6,1.6 i,1.6 i 16V	*ETV01C, ET16IN, ETV02C ETV02V, ETV01V, ETW01V ET16J, ET16V*	E	1590	G16BC, G16AI, G16B, G16A	M	Y		09/89 ▸	1740060812	**506614**	N	
SEAT												
Alhambra												
1.8 i 20V,1.8 i Turbo 20V	*7V8/3J5/9J5, 7V9/3B3/5B3 9B3*	E	1781	AJH, AWC	M	Y	23 teeth	06/00 ▸	06A121011TX	**506532**	CR	
1.8 i 20V,1.8 i Turbo 20V	*7V8/3J5/3J8/9J8, 7V9/3B9 5B9/9B9*	E	1781	AJH, AWC	A	Y	23 teeth	06/00 ▸	06A121011TX	**506532**	CR	
2.0 i	*7V9/2A3/3A3/5A3*	E	1984	ATM	M	Y	23 teeth	06/00 ▸	06A121011LV	**506532**	CR	
2.0 i 7M-Y-500 001 ▸	*7V8/355/3S5/9S5*	E	1984	ADY	M	Y		03/96 ▸ 04/99	037121010C	**506667**	N	506666
2.0 i	*7V9/2A8/3A8*	E	1984	ATM	A	Y	23 teeth	06/00 ▸	06A121011LV	**506532**	CR	
2.0 i 7M-Y-500 001 ▸ 7M-X-521 500	*7V8/3S8/9S8*	E	1984	ADY	A	Y		03/96 ▸ 04/99	037121010C	**506667**	N	506666
2.8 i VR6 24V	*7V9/3D3/3D7/5D3/5D7/9D3 9D7*	E	2792	AUE	M	Y		06/00 ▸	021121004X	**506484**	N	

• **New** Nouveau **Nuevo** Novo **Nuovo** Nieuw **Neu** Yeni Новый Nou

Valeo

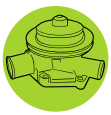

			CC						OE	Valeo		
SEAT (.../...)												
Alhambra (.../...)												
2.8 i VR6 24V	*7V9/3D3/3D7/5D3/5D7/9D3 9D7*	E	2792	AYL	M	Y		06/00 ▸	022121011	**506798**	N	
7M-2-525 001 ▸												
2.8 i VR6 24V	*7V9/3D7/3D9/5D7/5D9/9D7 9D9*	E	2792	AUE, AYL	A	Y		06/00 ▸	021121004X	**506484**	N	
2.8 i VR6 24V	*7V9/3D9/5D9/9D9*	E	2792	AYL	A	Y		10/01 ▸	022121011	**506798**	N	
7M-2-525 001 ▸												
1.9 TDi	*7V9/2U3/3T3/3T7/3U3/5T3 5T7/9T3/9T7/9U3*	D	1896	AUY, ANU	M	Y		06/00 ▸	038121011GX	**506872**	CR	
1.9 TDi	*7V9/3C3/5C3/9C3*	D	1896	ASZ	M	Y		11/02 ▸	045121011H	**506700**	CR	
1.9 TDi	*7V9/3T7/3T9/5T9/9T7/9T9*	D	1896	AUY	A	Y		06/00 ▸	038121011GX	**506872**	CR	
1.9 TDi	*7V8/385/3X5/985/9X5*	D	1896	AHU, AFN, 1Z	M	Y		03/96 ▸ 04/99	037121010C	**506667**	N	506666
7M-Y-500 001 ▸ 7M-X-521 500												
1.9 TDi	*7V8/388/988*	D	1896	AFN	A	Y		09/97 ▸ 04/99	037121010C	**506667**	N	506666
7M-Y-500 001 ▸ 7M-X-521 500												
Alhambra II (2003>)												
1.8 i Turbo 20V	*7V9/3B3/5B3/9B3*	E	1781	AWC	M	Y	23 teeth	06/03 ▸	06A121011T	**506532**	CR	
1.8 i Turbo 20V	*7V9/3B9/5B9/9B9*	E	1781	AWC	A	Y	23 teeth	06/03 ▸	06A121011T	**506532**	CR	
2.0 i	*7V9/3A3/5A3*	E	1984	ATM	M	Y	23 teeth	06/03 ▸	06A121011T	**506532**	CR	
2.0 i	*7V9/2A8/3A8*	E	1984	ATM	A	Y	23 teeth	06/03 ▸	06A121011T	**506532**	CR	
2.8 i VR6 24V	*7V9/3D3/3D7/5D3/5D7/9D3 9D7*	E	2792	AYL	M	Y		06/03 ▸	022121011	**506798**	N	
2.8 i VR6 24V	*7V9/3D9/5D9/9D9*	E	2792	AYL	A	Y		06/03 ▸	022121011	**506798**	N	
1.9 TDi	*7V9/3C3/3C7/5C3/5C7/9C3 9C7*	D	1896	ASZ	M	Y		06/03 ▸	045121011H	**506700**	CR	
1.9 TDi	*7V9/3T3/3T7/3U3/5T3/5T7 9T3/9T7/9U3*	D	1896	ANU, AUY	M	Y		06/03 ▸	038121011GX	**506872**	CR	
1.9 TDi	*7V9/3T9/5T9/9T9*	D	1896	AUY	A	Y		06/03 ▸	038121011GX	**506872**	CR	
2.0 TDi 16V	*7V9/353/383/553/583/953 983*	D	1968	BRT	M	Y		06/05 ▸	038121011GX	**506872**	CR	
Altea (2004>2009)												
1.4 TSi 125 16V	*5P1/2H1, 5P5/1H1/2H1*	E	1390	CAXC	M	Y		11/07 ▸	03C121005N	●**506950**	N	
2.0 TFSi,2.0 TFSi 16V	*5P1/5P1, 5P5/2P1/8P1/8P4*	E	1984	BWA	M	Y	23 teeth	05/06 ▸	06F121011X	**506876**	CR	
2.0 TFSi 16V	*5P15P3, 5P52P3*	E	1984	BWA	A	Y	23 teeth	05/06 ▸	06F121011X	**506876**	CR	
2.0 FSi 16V	*5P1/1M1/2M1, 5P5/1M1/2M1*	E	1984	BLR,BLY,BVY,BVZ	M	Y		05/04 ▸	06B121011HX	**506790**	CR	
2.0 FSi 16V	*5P1/1M3/2M3, 5P5/1M3/2M3*	E	1984	BLR,BLY,BVY,BVZ	A	Y		05/04 ▸	06B121011MX	**506790**	CR	
1.9 TDi	*5P1/112/121/122/212/222 5P5/112/122/212/222*	D	1896	BXE, BJB, BLS, BKC	M	Y		04/04 ▸	045121011H	**506700**	CR	
2.0 TDi,2.0 TDi 16V 2.0 TDi PD 16V	*5P1/131/231/241/261/561 5P5/231/241/864*	D	1968	BMN, BKD, AZV	M	Y		03/04 ▸	03G121011	**506699**	CR	
2.0 TDi	*5P1/171/271, 5P5/171/261 271*	D	1968	BMM	M	Y		01/06 ▸	038121011GX	**506872**	CR	
2.0 TDi 16V	*5P1/133/233/243, 5P5/233 243*	D	1968	BKD, AZV	A	Y		06/04 ▸	038121011K	**506699**	CR	
2.0 TDi	*5P5273, 5P1/173/273*	D	1968	BMM	A	Y		11/05 ▸	038121011GX	**506872**	CR	
Altea (2009>)												
1.6 TDi CR	*5P1/1U2/2U2/3U2/9Z2 5P88U2, 5P5/1U2/2U2/3U2*	D	1598	CAYB,CAYC	M	Y	19 teeth	10/09 ▸	03L121011	▲**506974**	CR	
1.6 TDi CR	*5P1/1U5/2U5/3U5, 5P5/1U5 2U5/3U5*	D	1598	CAYC	A	Y	19 teeth	02/10 ▸	03L121011	▲**506974**	CR	
Arosa												
1.0 i	*6H1/0B4/0C4/0H4/0H5/0L4/0W4/1B4*	E	999	AER, AUC, ALL, ALD, ANV	M	Y		02/97 ▸	030121008C	**506577**	CR	
1.0 i	*6H10A4*	E	999	AHT	M	y		11/98 ▸	047121013J	**506786**	N	
1.4 i 16V	*6H1/0E4/0R4/3E4*	E	1390	AUB, AQQ, AFK	M	Y		09/00 ▸	036121005S	**506576**	CR	
2-014 001 ▸												
1.4 i	*6H1/0F4/0S4*	E	1390	AKV, APQ	M	Y		05/97 ▸ 01/99	030121008D	**506385**	CR	
1.4 i	*6H1/0N4/0X4/1N4/2N4*	E	1390	ANW, AUD, AKK	M	Y		01/99 ▸	030121008C	**506577**	CR	
1.4 i	*6H1/0F3/0S3*	E	1390	AEX, APQ, AKV	A	Y		02/97 ▸ 01/99	030121008D	**506385**	CR	
1.4 i	*6H1/0D3/0X3/1N3*	E	1390	ANW, AUD, AKK	A	Y		09/99 ▸	030121008C	**506577**	CR	
1.4 TDi	*6H1/094/194/294*	D	1422	AMF	M	Y		09/00 ▸	045121011B	**506873**	CR	

• **New** Nouveau **Nuevo** Novo **Nuovo** Nieuw **Neu** Yeni Новый Nou

		Type Ctr.		cc						OE	Valeo	
SEAT (.../...)												
Arosa (.../...)												
1.4 TDi	*6H1/094/194/294*	D		1422	AMF	M	Y		05/02 ▸ 06/04	045121011H	**506700**	CR
3-000 002 ▸												
1.7 SDi	*6H1/074/0M4/174*	D		1716	AKU	M	Y		08/97 ▸	028121004	**506513**	N
Cordoba (93>96)												
1.4 i	*6K2/2U2/2U3/2V2/3U2/3U3/3V2*	E		1390	AEX	M	Y		09/95 ▸ 06/96	030121008D	**506385**	CR
1.4 i	*6K2/2J1/2J2/2P1/2P2/2R1/3J1/3J2/3P1 3P2/3R1/3R2*	E		1391	ABD	M	Y		11/93 ▸ 11/95	030121005LX	**506282**	CR
1.6 i	*6K2/2A1/2D1/2S1/3A1/3D1*	E		1595	1F	M	Y		11/93 ▸ 06/96	037121010C	**506667**	N 506666
1.6 i	*6K2/2E1/2E2/3E1/3E2*	E		1598	ABU	M	Y		11/93 ▸ 07/94	030121005LX	**506282**	CR
1.6 i	*6K2/2W1/2W2/3W1/3W2/8W1/8W2*	E		1598	AFT	M	Y		09/95 ▸ 06/96	037121010C	**506667**	N 506666
1.8 i,1.8 i 16V	*6K2/2D1/2F1/2M1/2T1/3C1 3F1/3M1/6G1/8C1/8G1*	E		1781	ABS, ADL, ADZ, ACC	M	Y		11/93 ▸ 06/96	037121010C	**506667**	N 506666
1.8 i	*6K2/2C2/2F2/2M2/3C2/3F2/3M2*	E		1781	ADZ, ABS	A	Y		01/94 ▸ 06/96	037121010C	**506667**	N 506666
2.0 i	*6K2/3H1/5H1/8H1/8L1*	E		1984	2E, AGG	M	Y		09/93 ▸ 06/96	037121010C	**506667**	N 506666
1.9 D,1.9 SDi,1.9 TD	*6K2/2N1/2X1/2X2/2Z2/372 3E1/3K1/3Q1/3X1/3Y2/3Z2 5E1/5K1/5Q1*	D		1896	AAZ, 1Y, AEY	M	Y		09/93 ▸ 06/96	037121010C	**506667**	N 506666
Cordoba (96>99)												
1.0 i	*6K2/261/361*	E		999	AER	M	Y		06/97 ▸ 04/99	030121008C	**506577**	CR
1.4 i	*6K2/2A3/2U2/2U3/2V2/3A3/3U2/3U3/3V2 6K5/2A3/2U2/2U3/2V2/3A3/3U2/3U3 3V2*	E		1390	APQ, AEX, ANX, AKV	M	Y		07/96 ▸ 05/99	030121008D	**506385**	CR
1.4 i 16V	*6K2/271/371*	E		1390	AFH	M	Y		06/97 ▸ 04/99	036121005M	**506578**	CR
1.6 i	*6K2/2D1/2S1/3D1/8D1*	E		1595	1F	M	Y		07/96 ▸ 04/99	037121010C	**506667**	N 506666
1.6 i	*6K2/2D4/3D4, 6K5/2D4/3D4*	E		1595	1F	A	Y		05/97 ▸ 05/99	037121010C	**506667**	N 506666
1.6 i	*6K2/2W1/2W2/3W1/3W2/5W1/5W2/8W1/8W2 6K5/2W1/3W1/3W2*	E		1598	AFT	M	Y		07/96 ▸ 05/99	037121010C	**506667**	N 506666
1.6 i	*6K2/251/2F1/351/3F1/851/8F1, 6K5 251/2F1/351/3F1*	E		1598	AEE, ALM	M	Y		05/97 ▸ 05/99	030121008D	**506385**	CR
1.8 i	*6K52T1, 6K2/2M1/2T1/3M1*	E		1781	ADZ, ACC	M	Y		07/96 ▸ 05/99	037121010C	**506667**	N 506666
1.8 i	*6K2/2C2/2M2/3C2/3M2*	E		1781	ADZ	A	Y		07/96 ▸ 04/99	037121010C	**506667**	N 506666
2.0 i,2.0 i 16V	*6K2/2L1/5L1/611/811/8L1*	E		1984	AGG, ABF	M	Y		07/96 ▸ 04/99	037121010C	**506667**	N 506666
1.9 D,1.9 SDi,1.9 TD 1.9 TDi	*6K2/2N2/2Y2/2Z2/3E1/3N2 3Y2/3Z2/581/5E1/5N2/881 8N2, 6K5/2N2/2Z2/3N2/3Z2 581*	D		1896	AAZ, 1Z, AHU, AEY, AFN, 1Y	M	Y		07/96 ▸ 05/99	037121010C	**506667**	N 506666
Cordoba (99>2002)												
1.0 i 16V	*6K2/2Q6/2Y6/3Y6*	E		999	AST, AVZ	M	Y		05/00 ▸ 08/02	036121005M	**506578**	CR
1.4 i 16V	*6K2/2E6/2R6/3R6/5R6/8E6 6K5/2E6/2R6/3E6/3R6*	E		1390	AQQ, APE	M	Y		05/99 ▸ 08/02	036121005Q	**506576**	CR
1.6 i	*6K2/2F1/3F1/8F1, 6K5/2F1/3F1*	E		1598	ALM	M	Y		05/99 ▸ 08/02	030121008D	**506385**	CR
1.6 i	*6K5/2F1/3F1*	E		1598	ALM	M	Y		08/99 ▸ 08/02	038121011A	**506533**	CR
1.8 i Turbo 20V	*6K2/6J6/9J6*	E		1781	AQX	M	Y	23 teeth	12/99 ▸ 08/02	06A121011T	**506532**	CR
1.9 SDi,1.9 TDi	*6K2/2K6/2L6/2M6/2N6/3K6 3L6/3M6/3N6/3X6/5L6/5N6 5X6/8L6/8N6/9X6, 6K5/2K6 2L6/2M6/3K6/3L6/3M6/3X6 5L6/5X6*	D		1896	AQM, AGR, AGP, ALH, ASV	M	Y		05/99 ▸ 08/02	038121011A	**506533**	CR
1.9 TDi	*6K5/2N6/3N6/5N6*	D		1896	ALH	M	Y		10/99 ▸ 08/02	030121005T	**506385**	CR
Cordoba (2002>)												
1.2 i 12V	*6L2/2D4/3D4*	E		1198	AZQ, BME	M	N		10/02 ▸	03D121013B	**506855**	N
1.4 i 16V	*6L2/2G4/2H4/3G4/3H4/5G4 5H4*	E		1390	BBY, BBZ, BKY	M	Y		09/02 ▸	036121005S	**506576**	CR
1.4 i 16V	*6L2/2G3/2G4/3G3/5G4*	E		1390	BKY, BBY	A	Y		10/02 ▸	036121005S	**506576**	CR
1.6 i	*6L2/2K4/3K4*	E		1598	BAH	M	Y		04/03 ▸	030121008D	**506385**	CR
1.6 i	*6L2/2C4/3C4/5C4*	E		1598	BTS	M	Y		11/06 ▸	03C121005L	●**506867**	N
2.0 i	*6L2/2T4/3T4/5T4*	E		1984	AZL	M	Y	23 teeth	09/02 ▸	06A121011T	**506532**	CR

• **New** Nouveau **Nuevo** Novo **Nuovo** Nieuw **Neu** Yeni Новый Nou

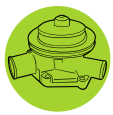

		Type Ctr.		cc						OE	Valeo		
SEAT (.../...)													
Ibiza (2001>) (.../...)													
1.6 i	*6L1/2C4/3C4/5C4*	E		1598	BTS	M	Y		11/06 ▸	03C121005D	●506867	N	
1.6 i	*6L1/2C7/3C7*	E		1598	BTS	A	Y		11/07 ▸	03C121005D	●506867	N	
1.8 i Turbo 20V	*6L1/6P4/7J4*	E		1781	BJX, BBU	M	Y	23 teeth	12/03 ▸	06A121011T	506532	CR	
2.0 i	*6L1/2L4/2T4/3L4/3T4/5L4/5T4*	E		1984	BBX, AZL	M	Y	23 teeth	07/02 ▸	06A121011T	506532	CR	
1.4 TDi	*6L1/204/304/504/554/564 574*	D		1422	AMF, BMS, BNM, BNV	M	Y		05/02 ▸	045121011H	506700	CR	
1.9 TDi	*6L1/224/284/324/336/384*	D		1896	BMT, ASZ, ATD, AXR, BLT	M	Y		09/01 ▸	045121011H	506700	CR	
6L-3-000 001 ▸	*524/536/584/736*												
1.9 SDi	*6L1/114/214/314*	D		1896	ASY	M	Y		05/02 ▸	045121011G	506701	CR	
6L-3-000 001 ▸													
1.9 TDi	*6L1646*	D		1896	BPX, BUK	M	Y		12/03 ▸	038121011K	506699	CR	
1.9 TDi	*6L1/224/324/336/524/536*	D		1896	ATD, ASZ	M	Y		09/01 ▸ 05/02	045121011B	506873	CR	
▸ 6L-3-000 000													
1.9 SDi	*6L1/114/214/314*	D		1896	ASY	M	Y		01/02 ▸ 05/02	045121011C	506874	CR	
▸ 6L-3-000 000													
Ibiza (2008>)													
2.0 i	*6J5/2L4/3L4/5L4*	E		1984	CEKA	M	Y	23 teeth	11/08 ▸	06A121012	506532	CR	
1.6 TDI 16V	*6J1/204/224/244/324/344 524/544, 6J5/204/224/244 324/344/524/544, 6J8/224 244/324/344/544*	D		1598	CAYA,CAYB,CAYC	M	Y	19 teeth	05/09 ▸	03L121011	▲506974	CR	
2.0 TDI 16V	*6J17Q1, 6J57Q1*	D		1968	CFHD	M	Y	19 teeth	01/10 ▸	03L121011X	▲506974	CR	
Leon													
1.4 i 16V	*1M1/2C4/2D4/3C4/3D4/5C4 5D4/8C4/8D4*	E		1390	AHW, APE, AXP, BCA	M	Y		05/01 ▸	036121005S	506576	CR	
1.6 i 16V	*1M1/3KC/5KC/8KC*	E		1595	AUS	M	Y		06/00 ▸ 04/01	036121005J	506578	CR	
1.6 i 16V	*1M1/3KC/5KC/8KC*	E		1595	AUS, BCB, AZD	M	Y		06/00 ▸	036121005P	506706	CR	
1.8 i 20V,1.8 i Turbo 20V	*1M1/3Q4/516/536/559/586 599/5P4/5Q4/636/736/759 8P4/8Q4*	E		1781	AGN, ARY, APP, APG, AMK, AJQ AUQ, BAM	M	Y	23 teeth	11/99 ▸	06A121011L	506532	CR	
1.8 i 20V	*1M1/3Q3/5Q3/8Q3*	E		1781	APG	A	Y	23 teeth	09/00 ▸	06A121011LX	506532	CR	
2.8 i V6 24V	*1M1/6W7/7W7*	E		2792	BDE	M	Y		11/01 ▸	022121011	506798	N	
2.8 i V6 24V	*1M16W7*	E		2792	BDE, AUE	M	Y		10/00 ▸ 11/01	021121004X	506484	N	
▸ 1M-2-050 000													
1.9 SDi	*1M1/204/304*	D		1896	AQM	M	Y		06/00 ▸	037121010A	506667	N	506666
1.9 TDi	*1M1/566/567/666/667/766*	D		1896	ARL	M	Y		09/00 ▸	038121011K	506699	CR	
2R-000 001 ▸	*767*												
1.9 TDi	*1M1/346/3V4/546/846*	D		1896	AXR, ASZ	M	Y		05/03 ▸	038121011CX	506871	CR	
1.9 SDi,1.9 TDi	*1M1/204/304/324/344/374 3B4/524/574/824/844/874 8B4*	D		1896	ALH, AHF, AGR, ASV, AQM	M	Y		11/99 ▸	038121011A	506533	CR	
Leon II													
1.4 i 16V	*1P11E2*	E		1390	BXW	M	Y		06/06 ▸	036121008L	506576	CR	
1.4 TFSi 16V	*1P1/1H1/2H1/3H1*	E		1390	CAXC	M	Y		11/07 ▸	03C121008B	●506950	N	
2.0 TFSi 16V	*1P1/2B1/2P1/591/5P1*	E		1984	BWA, BWJ	M	Y	23 teeth	11/05 ▸	06F121011X	506876	CR	
2.0 TFSi 16V	*1P15P3*	E		1984	BWA	A	Y	23 teeth	11/05 ▸	06F121011X	506876	CR	
2.0 FSi 16V	*1P1/1M1/2M1*	E		1984	BLR,BLY,BVY,BVZ	M	Y		07/05 ▸	06B121011M	506790	CR	
2.0 FSi 16V	*1P1/1M3/2M3*	E		1984	BLR,BLY,BVY,BVZ	A	Y		07/05 ▸	06B121011HX	506790	CR	
1.6 TDi CR	*1P1/1U5/2U5/3U5*	D		1598	CAYC	A	Y	19 teeth	02/10 ▸ 05/10	03L121011	▲506974	CR	
1.9 TDi	*1P1/112/122/212/222*	D		1896	BXE, BKC, BLS	M	Y		07/05 ▸	045121011H	506700	CR	
2.0 TDi 16V	*1P1/131/231/241/561*	D		1968	BMN, BKD, AZV	M	Y		07/05 ▸	03G121011	506699	CR	
2.0 TDi	*1P1/171/271*	D		1968	BMM	M	Y		10/05 ▸	038121011GX	506872	CR	
2.0 TDi 16V	*1P1/133/233/243*	D		1968	BKD, AZV	A	Y		07/05 ▸	038121011K	506699	CR	
2.0 TDi	*1P1/173/273*	D		1968	BMM	A	Y		11/05 ▸	038121011GX	506872	CR	
Malaga													
1200		E		1193	021A-1000		Y		05/85 ▸	SE021032000A	506256	SS	
1500		E		1461	021A, 021A-2000		Y		05/85 ▸	SE021032000A	506256	SS	
1700 D		D		1714	022A-5000		Y		05/85 ▸	SE700032000A	506860	V	
Marbella													
850		E		843	08NCA	M	Y		11/86 ▸ 1991	SE020032000A	506079	V	

• **New** Nouveau **Nuevo** Novo **Nuovo** Nieuw **Neu** Yeni Новый Nou

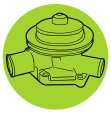

SEAT (.../...)

Marbella (.../...)

900		E	903	09NCA	M	Y		11/86 ▸ 1993	SE020032000A	**506079**	V	

Ronda

1200	*TC10, TC20, TC60, TC70, TP05, TP18 TP21, TC0/0*	E	1193	021A-1000, SEAT4		Y		10/84 ▸ 06/87	SE021032000A	**506256**	SS	
1500	*TP76, TP90*	E	1461	021C-2000, 021A-2000		Y		10/84 ▸ 06/87	SE021032000A	**506256**	SS	
1700 D	*TD69, TD77*	D	1714	SEAT10		Y		10/84 ▸ 06/85	SE021032000A	**506256**	SS	
1700 D	*TS60*	D	1714	SEAT10		Y		07/85 ▸ 1986	SE700032000A	**506860**	V	

Toledo (91>98)

1.6,1.6 i	*1L2/2A1/2B1/2Q1/2X1/3A1 3B1/3Q1/3X1/5X1/8A1/8B1 8Q1/8X1*	E	1595	ABN, 1F, EZ	M	Y		02/91 ▸ 10/98	037121010C	**506667**	N	506666
1.6 i	*1L2/2W1/311/3W1/511/5W1/8W1*	E	1598	AFT, AKS	M	Y		09/96 ▸ 10/98	037121010C	**506667**	N	506666
1.8 i,1.8 i 16V	*1L2/2C1/2C2/2J1/2P1/3C1 3C2/3J1/3P1/3P2/5E1/5F1 8C1/8C2/8J1/8P1/8P2*	E	1781	RP, ADZ, ABS, KR, PL	M	Y		02/91 ▸ 10/98	037121010C	**506667**	N	506666
2.0 i,2.0 i 16V	*1L2/2K1/3D1/3K1/3T1/5D1 5K1/5M1/5M2/5T1/6M1/6M2 8D1/8K1/8T1*	E	1984	AGG, 2E, ABF	M	Y		02/91 ▸ 10/98	037121010C	**506667**	N	506666
2.0 i	*1L2/3D2/3T2/5D2/5K2/5T2/8D2/8T2*	E	1984	2E, AGG	A	Y		02/91 ▸ 10/98	037121010C	**506667**	N	506666
1.9 D,1.9 TD,1.9 TDi	*1L2/2H1/2L1/2S1/3G1/3G2 3H1/3L1/3N1/3R1/3S1/3Z1 5R1/5Z1/8G1/8G2/8H1/8L1 8N1/8R1/8S1/8Z1*	D	1896	AFN, AHU, AAZ, 1Y, 1Z	M	Y		02/91 ▸ 10/98	037121010C	**506667**	N	506666

Toledo (98>2004)

1.4 i 16V	*1M2/2C4/3C4/3D4*	E	1390	AHW, AXP	M	Y		01/00 ▸ 05/02	036121005S	**506576**	CR	
1.6 i 16V	*1M2/2KC/3KC/5KC/8KC*	E	1595	BCB, AUS, AZD	M	Y		06/00 ▸ 07/04	036121005P	**506706**	CR	
1.8 i 20V	*1M2/3P4/3Q4/536/5P4/5Q4 836/8P4/8Q4*	E	1781	AGN, APG, AUQ	M	Y	23 teeth	10/98 ▸	06A121011LX	**506532**	CR	
1.8 i 20V	*1M2/3N3/3Q3/5N3/5Q3/8N3 8Q3*	E	1781	AGN, APG	A	Y	23 teeth	11/98 ▸	06A121011L	**506532**	CR	
2.3 i VR5 20V	*1M2/5T4/5U4/6T4/6U4/8U4*	E	2324	AQN, AGZ	M	N		10/98 ▸	071121005	**506587**	N	
1.9 TDi	*1M2/566/666/866*	D	1896	ARL	M	Y		10/00 ▸	038121011K	**506699**	CR	
1.9 TDi	*1M2/224/244/274/2B4/324 344/374/3B4/524/574/824 844/846/874/8B4*	D	1896	AHF, ASV, AGR, ALH, ASZ	M	Y		10/98 ▸ 04/99	038121011AV	**506533**	CR	

Toledo (2004>)

2.0 TFSi 16V	*5P22P1*	E	1984	BWA	M	Y	23 teeth	05/06 ▸	06F121011X	**506876**	CR	
2.0 TFSi 16V	*5P22P3*	E	1984	BWA	A	Y	23 teeth	05/06 ▸	06F121011X	**506876**	CR	
2.0 FSi 16V	*5P2/1M1/2M1*	E	1984	BLR,BLY,BVY,BVZ	M	Y		09/04 ▸	06B121011H	**506790**	CR	
2.0 FSi 16V	*5P2/1M3/2M3*	E	1984	BLR,BLY,BVY,BVZ	A	Y		09/04 ▸	06B121011MX	**506790**	CR	
1.9 TDi	*5P2/112/122/212/222*	D	1896	BJB, BXE, BKC, BLS	M	Y		09/04 ▸	045121011H	**506700**	CR	
2.0 TDi 16V 2.0 TDi PD 16V	*5P2/031/131/141/231/241 261/271*	D	1968	BKD, AZV, BMN	M	Y		09/04 ▸	03G121011	**506699**	CR	
2.0 TDi	*5P2171*	D	1968	BMM	M	Y		01/06 ▸	038121011GX	**506872**	CR	
2.0 TDi 16V 2.0 TDi PD 16V	*5P2/033/073/133/143/173 233/243/273*	D	1968	BKD, AZV, BMN	A	Y		09/04 ▸	03G121011	**506699**	CR	

Toledo (2012>)

1.4 FSi	*5P2/1H1/2H1*	E	1390	CAXC	M	Y		07/12 ▸	03C121005NX	•**506950**	N	
1.4 TSI 16V	*KG33PD*	E	1390	CAXA	A	Y		07/12 ▸	03C121008E	•**506950**	N	

SEAT

Inca

1.4 i 16V	*6K9/1E6/2E6/3E6/4E6*	E	1390	AUA	M	Y		09/00 ▸	036121005Q	**506576**	CR	
1.4 i	*6K9/1D6/2D6/3D6/4D6*	E	1390	AUD	M	Y		09/00 ▸ 06/03	030121008C	**506577**	CR	
1.4 i	*6K9/1A1/1U1/1V1/2A1/2U1/2U4/2V1/3A1 3U1/3U4/3V1/4A1/4U1/4V1*	E	1390	AEX, AKV, APQ	M	Y		11/95 ▸	030121008D	**506385**	CR	

• **New** Nouveau **Nuevo** Novo **Nuovo** Nieuw **Neu** Yeni Новый Nou

		Type Ctr.		cc					OE	Valeo		
SEAT (.../...)												
Inca (.../...)												
1.6 i	*6K9/1D2/2D2/2D3/3D2/3D3/4D2*	E		1595	1F	M	Y		11/95 ▸ 05/97	037121010C	**506667**	N	506666
1.6 i	*6K9/152/252/253/352/353/452*	E		1598	AEE	M	Y		06/97 ▸	030121008D	**506385**	CR	
1.7 SDi	*6K9/121/221/321/421*	D		1714	AHB	M	Y		07/96 ▸	037121010C	**506667**	N	506666
1.9 SDi	*6K9/136/236/336/436*	D		1896	AYQ	M	Y		09/00 ▸ 06/03	038121011A	**506533**	CR	
1.9 D,1.9 SDi	*6K9/1Y1/1Z1/2Y1/2Z1/3Y1 3Z1/4Y1/4Z1*	D		1896	AEY, 1Y	M	Y		11/95 ▸	037121010C	**506667**	N	506666
Terra												
903	*CT0/5/6/7*	E		903	09NCA	M	Y		08/88 ▸ 07/91	SE020032000A	**506079**	V	
SKODA												
Fabia (99>2004)												
1.0 i	*6Y2/0A4/1A4*	E		997	AQV, ARV	M	Y		10/00 ▸	047121013R	**506730**	N	
6Y-1X011010 ▸ 6Y-1X011 099													
1.2 i,1.2 i 6V	*6Y2/0C4/1C4/1E4/2C4/2E4 3E4, 6Y3/1C4/1E4/2C4/2E4 3E4, 6Y5/1C4/1E4/2C4/2E4 3E4/PC4/PE4*	E		1198	AWY, AZQ, BMD	M	N		07/01 ▸	03D121005	**506855**	N	
1.2 i	*6Y1C4*	E		1198	BMD	M	Y		02/00 ▸	047121013R	**506730**	N	
6Y-1X011010 ▸ 6Y-2X024027													
1.4 i 16V	*6Y2/1F4/1JA/2F4/2J4/3F4*	E		1390	AUB, AUA, BKY, BBY, BBZ	M	Y		10/99 ▸	036121005S	**506576**	CR	
6Y-1-116 274 ▸ 6Y-2-386 084	*3J4, 6Y3/1F4/1J4/2F4/2J4 3F4/3J4, 6Y5/1F4/1J4/2F4 2J4/3F4/3J4*												
1.4 i 16V	*6Y2/1F3/2F3/3F3, 6Y3/1F3*	E		1390	AUA, BBY, BKY	A	Y		05/00 ▸	036121005S	**506576**	CR	
6Y-1X006413 ▸ 6Y-2X030 027	*2F3/3F3, 6Y5/1F3/2F3/3F3*												
1.4 i	*6Y2/0B4/1B4/1D4/2B4/2D4/3D4, 6Y3*	E		1397	AQW, AME, ATZ, AZE, AZF	M	Y		08/99 ▸	047121013R	**506730**	N	
6Y-1X011010 ▸ 6Y-1X011 099	*1B4/1D4/2B4/2D4/3D4, 6Y5/1B4/1D4 2B4/2D4/3D4/PB4/PD4*												
2.0 i	*6Y2/1T4/2T4/3T4, 6Y3/1T4/2T4/3T4 6Y5/1T4/2T4/3T4*	E		1984	AZL	M	Y	23 teeth	12/99 ▸ 07/04	06A121011T	**506532**	CR	
1.4 TDi	*6Y2/144/244/344, 6Y3/144 244/344, 6Y5/144/244/344*	D		1422	AMF	M	Y		03/03 ▸	045121011F	**506700**	CR	
1.4 TDi	*6Y2144*	D		1422	AMF	M	Y		09/00 ▸ 05/01	047121013P	**506730**	N	
6Y-1X011010 ▸ 6Y-1-173 916													
1.9 TDi	*6Y2/164/264/364/585, 6Y3*	D		1896	ATD, ASZ	M	Y		03/02 ▸	045121011F	**506700**	CR	
6Y-2-510001 ▸	*164/264/364, 6Y5/164/264 364*												
1.9 SDi	*6Y2/124/224/324, 6Y3/124 224/324, 6Y5/124/224/324 P24*	D		1896	ASY	M	Y		08/02 ▸ 07/04	045121011J	**506701**	CR	
1.9 TDi	*6Y2/164/264/364, 6Y3/164*	D		1896	ATD	M	Y		01/00 ▸ 11/02	045121011B	**506873**	CR	
▸ 6Y-2-510 000	*364, 6Y5/164/264/364*												
1.9 SDi	*6Y2/124/224/324, 6Y3/124*	D		1896	ASY	M	Y		11/99 ▸ 08/02	045121011C	**506874**	CR	
▸ 6Y-3X628012	*224/324, 6Y5/124/224/324 P24*												
Fabia (FL) (2004>2007)												
1.2 i,1.2 i 12V	*6Y2/0C4/1C4/1E4/2C4/2E4 3E4, 6Y3/1C4/1E4/2C4/2E4 3E4, 6Y5/1C4/1E4/2C4/2E4 3E4/PC4/PE4*	E		1198	BME-E4, AZQ, BMD	M	N		08/04 ▸	03D121005	**506855**	N	
1.2 i 12V	*6Y21E4*	E		1198	BME-E4	M	Y		09/00 ▸ 04/07	047121013R	**506730**	N	
6Y-1-173 917 ▸ 6Y-2-326 084													
1.4 TDi	*6Y2/114/134/144/214/234 244/314/334/344, 6Y3/114 124/134/144/1G4/214/234 244/2G4/2GA/314/334/344 3G4, 6Y5/114/134/144/1G4 214/234/244/2G4/314/334 344/3G4/P14*	D		1422	BNM, BNV, AMF	M	Y		08/04 ▸	045121011H	**506700**	CR	

• **New** Nouveau **Nuevo** Novo **Nuovo** Nieuw **Neu** Yeni Новый Nou

Valeo

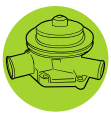

SKODA (.../...)

			CC						OE	Valeo		
Fabia (FL) (2004>2007) (.../...)												
1.9 SDi	6Y2/124/224/324, 6Y3/124 224/324, 6Y5/124/224/324 P24	D	1896	ASY	M	Y		08/04 ▸	045121011J	**506701**	CR	
1.9 TDi	6Y2/164/264/364/585, 6Y3 164/264/364, 6Y5/164/264 364	D	1896	ATD, AXR, ASZ, BLT	M	Y		08/04 ▸	045121011H	**506700**	CR	
Fabia II (2007>)												
1.2 i,1.2 i 12V	542/1B4/1D4/2B4/2D4/3B4 3D4/4B4/4D4, 545/1D4/2D4 3D4/4D4	E	1198	BBM-E4, BZG-E4, BZG-E2 BBM-E2	M	N		12/06 ▸	03D121005	**506855**	N	
1.6 i,1.6 i 16V	542/1K4/2K4/3K4/4K4, 545 1K4/2K4/3K4/4K4/SK4	E	1598	BTS	M	Y		04/07 ▸	03C121005LX	●**506867**	N	
1.6 i,1.6 i 16V	542/1KC/2KC/3KC/4KC, 545 1KC/2KC/3KC/4KC/SKC	E	1598	BTS	A	Y		07/07 ▸	03C121005L	●**506867**	N	
1.4 TDI	542/114/134/144/214/234 244/314/334/344/414/434 444, 545/114/134/144/214 234/244/314/334/344/414 434/444	D	1422	BNV, BNM, BMS/F	M	Y		01/07 ▸	045121011H	**506700**	CR	
1.9 TDI	542/164/174/264/274/364 374/464/474, 545/164/264 274/364/464/474	D	1896	BSW, BLS/F	M	Y		04/07 ▸	045121011H	**506700**	CR	
Fabia II (2010>)												
1.2 TDi 12V 1.2 TDi Green Line 12V	542/121/124/221/424/S24 545/121/124/221/224/324 424/S24	D	1199	CFWA	M	Y	19 teeth	03/10 ▸	03L121011X	▲**506974**	CR	
1.6 TDi 16V	542/144/154/184/444/454 484/S44/S54/S84, 545/144 154/184/244/254/284/344 354/384/444/454/484/S44 S54/S84	D	1598	CAYA,CAYB,CAYC	M	Y	19 teeth	03/10 ▸	03L121011	▲**506974**	CR	
Favorit												
1.1		E	1137	SKOD04	M	Y		01/89 ▸	115050001	**506634**	V	
1.1		E	1137	SKOD04	M	Y		01/89 ▸ 07/95	007070243	**506522**	vvv	
1.3	AEA200, CEA300, ADA/300	E	1289	136	M	Y		03/88 ▸ 07/95	007070243	**506522**	vvv	
1.3	AEA200, CEA300, CEE300, ADA/200/300	E	1289	136, 781135B	M	Y		03/88 ▸	115050001	**506634**	V	
Felicia (94>2001)												
1.3,1.3 i	6U1/334/434, 6U5/314/334 344/414/434/444, 6U7134 6U6/114/134/144/174/184 EEA/413/414/613/614/673 EEG/413/614	E	1289	135, 135CP, AMH, AMJ, 135I 136I, AMG, 13MPI54	M	Y		10/94 ▸ 12/97	047121011A	**506634**	V	
1.3,1.3 i	6U1/314/334/335/344/372 374/414/434/435/444/474 6U5/335/374/384/435/474 484, 6U6/114/134/144/174 184, 6U7/114/144/174/184 EEF/613/614/679, EEG/413 614, EFF/413/613/614/679	E	1289	13MPI68, AMJ, AMG, 13MPI54 AMH, 136I, 135I, 135CP	M	Y		10/94 ▸	047121011	**506522**	vvv	
1.3,1.3 i	6U1/335/374/435/474, 6U5 335/374/384/435/474/484	E	1289	AMG, AMJ, AMH	M	Y		08/96 ▸	047121011B	**506672**	vvv	
1.3 i	6U1/384/484	E	1289	AMH	M	Y		08/96 ▸ 12/97	030121008D	**506385**	CR	
1.6 i	6U1/3G4/4G4, 6U61G4, 6UFFG4, EGF615 6U5/3G4/4G4	E	1598	AEE, 16MPI	M	Y		05/95 ▸ 12/97	030121008D	**506385**	CR	
1.6 i	6U71G4	E	1598	AEE	M	Y		08/96 ▸ 12/97	028121004V	**506513**	N	
1.9 D	6U1/3H4/4H4, 6U61H4, 6U71H4, 6U5 3H4/4H4, EHH/613/614/673/679	D	1896	AEF	M	Y		10/95 ▸ 12/97	028121004V	**506513**	N	

• **New** Nouveau **Nuevo** Novo **Nuovo** Nieuw **Neu** Yeni Новый Nou

		Type Ctr.		cc						OE	Valeo	
SKODA (.../...)												
Felicia (Facelift) (98>2001)												
1.3,1.3 i	*6U1/371/375/385/475/485 6U5/375/385/475/485, 6U6 135/175/185, 6UFF85, 6U7 175/185*	E	1289	AMH, AMG, AMJ	M	Y		10/94 ▸		047121011	**506522**	vvv
1.3,1.3 i	*6U5/375/385/475/485 6U7135, 6U6/135/175/185*	E	1289	AMH, AMG, AMJ	M	Y		01/98 ▸		047121011A	**506634**	V
1.3 i	*6U1/385/475/485, 6U5/375/385/475 485, 6UFF85, 6U6/175/185*	E	1289	AMH, AMG	M	Y		01/98 ▸		047121011B	**506672**	vvv
1.6 i	*6U1/3C5/3G5/4C5/4G5, 6U5/3C5/3G5 4C5/4G5, 6U6/1C5/1G5, 6UFFG5, 6U7 1C5/1G5*	E	1598	AEE	M	Y		01/98 ▸		030121008D	**506385**	CR
1.9 D	*6U1/3H5/4H5, 6U61H5, 6U71H5, 6UFFH5 6U5/3H5/4H5*	D	1896	AEF	M	Y		11/95 ▸		028121004	**506513**	N
Octavia (96>2000)												
1.6 i	*1U51D4, 1U2/1D4/2D4*	E	1598	AEE	M	Y		10/96 ▸ 07/00		030121008D	**506385**	CR
1.8 i 20V,1.8 i Turbo 20V	*1U2/3P4/4O4/4S4, 1U5/2R4 3O4/3R4/4O4/4S4*	E	1781	AGU, AGN, ARZ	M	Y	23 teeth	10/96 ▸		06A121011T	**506532**	CR
1.8 i 20V,1.8 i Turbo 20V	*1U2/3P3, 1U5/2P3/3P3/3O3 4O3*	E	1781	AGU, AGN	A	Y	23 teeth	06/97 ▸		06A121011T	**506532**	CR
2.0 i	*1U2/3N4, 1U5/2TX/3TX*	E	1984	ATF, AZH, AQY	M	Y	23 teeth	05/99 ▸		06A121011T	**506532**	CR
2.0 i	*1U23N3*	E	1984	AQY, APK	A	Y	23 teeth	05/99 ▸		06A121011T	**506532**	CR
1.9 SDi,1.9 TDi	*1U2/164/264/274/374/384 394/484/494, 1U5/164/274 27X/374/37X/384/484/494 774*	D	1896	AGR, AHF, ASV, AGP	M	Y		10/96 ▸		038121011A	**506533**	CR
1.9 TDi	*1U2383*	D	1896	AHF	A	Y		08/97 ▸ 07/00		038121011A	**506533**	CR
Octavia (2000>2004)												
1.4 i 16V	*1U2/1B4/2B4, 1U5/1B4/2B4*	E	1390	BCA, AXP	M	Y		08/00 ▸		036121005S	**506576**	CR
1.6 i	*1U2/1D4/2D4, 1U5/1D4/2D4*	E	1598	AEE	M	Y		08/00 ▸		030121008D	**506385**	CR
1.8 20V,1.8 i Turbo 20V	*1U2/1O4/1OX/2O4/2OX/3O4 3OX/4O4/4OX/5O4/5R4/PO4 1U5/1O4/1OX/2O4/2OX/3O4 3OX/4O4/4OX/5R4*	E	1781	AUM, AGU, ARX, AUQ, ARZ	M	Y	23 teeth	08/00 ▸		06A121011T	**506532**	CR
1.8 i Turbo 20V	*1U2/1Q3/2Q3/3Q3/4Q3, 1U5 1Q3/2Q3/3Q3/4Q3*	E	1781	AGU, ARX, AUM	A	Y	23 teeth	08/00 ▸		06A121011T	**506532**	CR
2.0 i	*1U2/1N4/1T4/2M4/2N4/2T4/3M4/3N4/3T4 1U5/1N4/1T4/1TX/2N4/2T4/2TX/3N4 3T4/3TX*	E	1984	AEG, APK, AZJ, AQY, AZH	M	Y	23 teeth	08/00 ▸		06A121011T	**506532**	CR
2.0 i	*1U2/1N3/1T3/2N3/2T3/3N3/3T3, 1U5 1N3/1T3/2N3/2T3/3N3/3T3*	E	1984	AQY, APK, AEG, AZJ	A	Y	23 teeth	08/00 ▸		06A121011T	**506532**	CR
1.9 D,1.9 TDi	*1U2/164/174/184/264/274 284/374/384/474/484/P84 1U5/164/174/184/264/274 27X/284/374/37X/384/394 484*	D	1896	AHF, ALH, ASV, AGR, AQM	M	Y		08/00 ▸		038121011A	**506533**	CR
1.9 TDi	*1U2/154/295/395/495, 1U5 154/15Y/25Y/295/35Y/395 495*	D	1896	ATD, ASZ, AXR	M	Y		08/00 ▸		038121011J	**506872**	CR
1.9 TDi	*1U5/15Y/35Y*	D	1896	ATD	M	Y		08/00 ▸ 04/02		038121011CX	**506871**	CR
1.9 TDi	*1U2/173/273/373/473, 1U5 173/273/373*	D	1896	ALH	A	Y		08/00 ▸		038121011A	**506533**	CR
Octavia (2004>2008)												
1.4 i 16V	*1Z3/1B4/2B4, 1Z5/1B4/2B4*	E	1390	BCA	M	Y		05/04 ▸		036121005S	**506576**	CR
1.6 FSi 16V	*1Z3/1K4/2K4/3K4, 1Z5/1K4 2K4/3K4*	E	1598	BLF	M	Y		05/04 ▸		03C121005LX	●**506867**	N
1.6 FSi 16V	*1Z3/1KC/2KC/3KC, 1Z5/1KC 2KC/3KC*	E	1598	BLF	A	Y		08/04 ▸		03C121005K	●**506867**	N
2.0 TFSi 16V	*1Z35R5, 1Z55R5*	E	1984	BWA	M	Y	23 teeth	10/05 ▸		06F121011	**506876**	CR
2.0 FSi 16V	*1Z3/2N5/3N5/4N5, 1Z5/2N5 3N5/4N5/ANY/BNY/CNY/SNY*	E	1984	BLR,BLX,BLY,BVX,BVY,BVZ	M	Y		11/04 ▸ 10/08		06B121011MX	**506790**	CR

• **New** Nouveau **Nuevo** Novo **Nuovo** Nieuw **Neu** Yeni Новый Nou

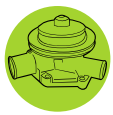

SKODA (.../...)

Octavia (2004>2008) (.../...)

2.0 FSi 16V	1Z3/2NC/3NC/4NC, 1Z5/2NC 3NC/4NC	E	1984	BLR,BLY,BVY,BVZ	A	Y		11/04 ▸ 10/08	06B121011M	**506790**	CR	
1.9 TDi	1Z3/154/164/254/264/354 364, 1Z5/154/164/254/264 354/364/A5Y/A6Y/B5Y/B6Y	D	1896	BXE, BLS/F, BJB, BKC	M	Y		05/04 ▸	045121011H	**506700**	CR	
1.9 TDi	1Z3/15C/16C/25C/26C/35C 36C, 1Z5/15C/16C/25C/26C 35C/36C	D	1896	BXE, BLS/F, BKC	A	Y		08/04 ▸	045121011H	**506700**	CR	
2.0 TDi 16V	1Z3/275/285/375/385/47C 485/595, 1Z5/275/285/375 385/475/485/595	D	1968	BMN, AZV, BKD	M	Y		05/04 ▸	03G121011	**506699**	CR	
2.0 TDi	1Z3/245/345/445, 1Z5/245 345/445/A4Y/B4Y/C4Y	D	1968	BMM	M	Y		11/05 ▸	038121011J	**506872**	CR	
2.0 TDi 16V	1Z3/27C/28C/37C/38C/475 48C, 1Z5/27C/28C/37C/38C 47C/48C	D	1968	BKD, AZV	A	Y		05/04 ▸	038121011K	**506699**	CR	
2.0 TDi	1Z3/24C/34C/44C, 1Z5/24C 34C/44C	D	1968	BMM	A	Y		11/05 ▸	038121011J	**506872**	CR	

Octavia (2008>)

1.4 i 16V	1Z3/1C4/2C4, 1Z5/1C4/2C4	E	1390	BUD	M	Y		11/08 ▸	036121008L	**506576**	CR	
1.4 TFSi 16V	1Z3/1L5/2L5/3L5/4L5, 1Z5 1L5/2L5/3L5/4L5	E	1390	CAXA	M	Y		11/08 ▸	03C121008E	●**506950**	N	
1.4 TFSi 16V	1Z3/1LD/2LD/3LD/4LD, 1Z5 1LD/2LD/3LD/4LD	E	1390	CAXA	A	Y		11/08 ▸	03C121008E	●**506950**	N	
1.6 i	1Z3/1G4/2G4/3G4, 1Z5/1G4/2G4/3G4	E	1595	BSF	M	Y		11/08 ▸ 10/09	036121008L	**506576**	CR	
1.6 i	1Z3/1GC/2GC/3GC, 1Z5/1GC/2GC/3GC	E	1595	BSF	A	Y		11/08 ▸ 10/09	036121008L	**506576**	CR	
1.6 TDi CR 16V	1Z3/124/221/224/324/424 1Z5/124/221/224/22Y/324 32Y/424/42Y	D	1598	CAYC	M	Y	19 teeth	06/09 ▸	03L121011	▲**506974**	CR	
1.6 TDi CR 16V	1Z3/12D/22D/32D/42D, 1Z5 12D/22D/32D/42D	D	1598	CAYC	A	Y	19 teeth	11/09 ▸	03L121011X	▲**506974**	CR	
1.9 TDI PD	1Z3/154/164/254/264/354 364, 1Z5/154/164/254/25Y 264/26Y/354/35Y/364/36Y	D	1896	BJB,BLS,BXE	M	Y		11/08 ▸	045121011H	**506700**	CR	
1.9 TDI PD	1Z3/15C/16C/25C/26C/35C 36C, 1Z5/15C/16C/25C/26C 35C/36C	D	1896	BLS,BXE	A	Y		11/08 ▸	045121011H	**506700**	CR	
2.0 TDI 136 16V 2.0 TDI PD 140 16V	1Z3/275/285/375/385/475 485, 1Z5/275/285/375/385 475/485	D	1968	AZV,BKD	M	Y		11/08 ▸	038121011K	**506699**	CR	
2.0 TDI PD	1Z3/245/345/445, 1Z5/245 24Y/345/34Y/445/44Y/S4Y	D	1968	BMM/F	M	Y		11/08 ▸	038121011J	**506872**	CR	
2.0 TDI PD	1Z3/24C/34C/44C, 1Z5/24C 34C/44C	D	1968	BMM/F	A	Y		11/08 ▸	038121011J	**506872**	CR	
2.0 TDI 136 16V 2.0 TDI PD 140 16V	1Z3/27C/28C/37C/38C/47C 48C, 1Z5/27C/28C/37C/38C 47C/48C	D	1968	AZV,BKD	A	Y		11/08 ▸	038121011K	**506699**	CR	

Roomster

1.2 i 12V	5J7/1D4/1E4/2D4/2E4/3D4 3E4/4D4/4E4/PD4	E	1198	BZG-E4, BME-E4, BME-E2	M	N		05/06 ▸	03D121005	**506855**	N	
1.6 i 16V	5J7/1K4/2K4/3K4/4K4/SK4	E	1598	BTS	M	Y		05/06 ▸	03C121005K	●**506867**	N	
1.6 i 16V	5J7/1KC/2KC/3KC/4KC/SKC	E	1598	BTS	A	Y		10/06 ▸	03C121005LX	●**506867**	N	
1.2 TDi CR 12V	5J7/121/124/221/224/324 424/P24/S24	D	1199	CFWA	M	Y	19 teeth	03/10 ▸	03L121011	▲**506974**	CR	
1.4 TDi	5J7/114/134/144/214/234 244/314/334/344/414/434 444/P14/S34/S44	D	1422	BMS/F, BNM, BNV	M	Y		05/06 ▸	045121011H	**506700**	CR	
1.6 TDi CR 16V	5J7/154/184/254/284/354 384/454/484/P54/S54/S84	D	1598	CAYB,CAYC	M	Y	19 teeth	03/10 ▸	03L121011	▲**506974**	CR	

• **New** Nouveau **Nuevo** Novo **Nuovo** Nieuw **Neu** Yeni Новый Nou

			CC						OE	Valeo	
SKODA (.../...)											
Roomster (.../...)											
1.9 TDi	*5J7/164/174/264/274/364 374/464/474/S64/S74*	D	1896	AXR, BSW, BLS/F	M	Y		03/06 ▸	045121011H	**506700**	CR
Superb (2001>2008)											
1.4 TFSi 16V	*3T4/1G5/2G5/3G5, 3T5/1G5 2G5/3G5*	E	1390	CAXC	M	Y		04/08 ▸	03C121005R	●**506950**	N
1.8 i Turbo 20V	*3U4/1K4/2K4/3K4*	E	1781	AWT	M	Y	23 teeth	12/01 ▸	06A121011T	**506532**	CR
3U-3-033 361 ▸											
1.8 i Turbo 20V	*3U4/1KB/2KB/3KB*	E	1781	AWT	A	Y	23 teeth	01/04 ▸	06A121011T	**506532**	CR
2.0 i	*3U4/1M4/2M4/3M4*	E	1984	AZM	M	Y	23 teeth	12/01 ▸	06A121011T	**506532**	CR
3U-3-033 361 ▸											
2.8 i V6 30V	*3U4/1S4/2S4/3S4*	E	2771	AMX	M	Y		12/01 ▸	078121006	**506517**	SS
2.8 i V6 30V	*3U4/1SB/1TB/2SB/2TB/3SB*	E	2771	BBG, AMX	A	Y		12/01 ▸	078121006	**506517**	SS
3U-2-008 472 ▸	*3TB*										
1.9 TDi	*3U4/124/134/224/234/324 334*	D	1896	AVB, AWX	M	Y		12/01 ▸	038121011CX	**506871**	CR
1.9 TDi	*3U4/124/134/144/224/234*	D	1896	AVB, BSV, AWX, BPZ	M	Y		12/01 ▸	038121011J	**506872**	CR
3U-3-015 229 ▸ 3U-6-116 027	*244/324/334/344*										
1.9 TDi	*3U4/13B/23B/33B*	D	1896	AVF	A	Y		01/04 ▸	038121011J	**506872**	CR
▸ 3U-6-116 027											
2.0 TDi	*3U4/155/165/255/265/355*	D	1968	BSS, BWW	M	Y		10/05 ▸	038121011J	**506872**	CR
3U-3-015 229 ▸ 3U-6-116 027	*365*										
2.5 TDi V6 24V	*3U4/165/175/265/275/365 375*	D	2496	BDG, AYM	M	Y		12/01 ▸	059121004E	**506591**	SS
2.5 TDi V6 24V	*3U4/16B/17B/26B/27B/36B 37B*	D	2496	BDG, AYM	A	Y		12/01 ▸	059121004E	**506591**	SS
Superb (2008>)											
1.9 TDi	*3T4/124/131/134/224/231 234/324/331/334, 3T5/124 134/224/234/324/334*	D	1896	BLS,BXE	M	Y		03/08 ▸	045121011H	**506700**	CR
2.0 TDi	*3T4/165/265/365, 3T5/165 265/365*	D	1968	BMP	M	Y		03/08 ▸ 03/10	038121011J	**506872**	CR
2.0 TDi	*3T4/16C/26C/36C, 3T5/16C 26C/36C*	D	1968	BMP	A	Y		03/08 ▸ 03/10	038121011J	**506872**	CR
2.0 TDi 16V	*3T4/15C/25C/35C, 3T5/15C 25C/35C*	D	1968	BKD	A	Y		01/09 ▸ 03/10	038121011K	**506699**	CR
2.0 TDi 16V	*3T4/185/19Y/285/29Y/385 39Y, 3T5/185/19Y/285/29Y 385/39Y*	D	1968	CFFB,CFGB	M	Y	19 teeth	03/10 ▸	03L121011X	▲**506974**	CR
2.0 TDi 16V	*3T4/18C/28C/38C, 3T5/18C 28C/38C*	D	1968	CFFB	A	Y	19 teeth	03/10 ▸	03L121011X	▲**506974**	CR
Yeti											
1.4 TFSI 122	*5L7/1L5/2L5/3L5*	E	1390	CAXA	M	Y		06/10 ▸	03C121008BX	●**506950**	N
2.0 TDI CR 16V	*5L7/124/12Y/14Y/224/22Y 24Y/324/32Y/34Y*	D	1968	CFHA,CFHC,CFHF,CLCB	M	Y	19 teeth	11/09 ▸	03L121011	▲**506974**	CR
2.0 TDI CR 16V	*5L7/14X/24X/34X*	D	1968	CFHC	A	Y	19 teeth	05/10 ▸	03L121011X	▲**506974**	CR
SMART											
Crossblade											
0.6 i	*450418*	E	599	MCC04	A	Y		06/02 ▸ 12/03	0004681V002000000	**506677**	N
Forfour											
1.1 i	*454030, 454033*	E	1124	134.910,134.911	M	Y		04/04 ▸ 06/06	1352000001	**506962**	N
1.3 i	*454031*	E	1332	135.930	M	Y		04/04 ▸ 06/06	1352000001	**506962**	N
1.5 i	*454032*	E	1499	135.950	M	Y		04/04 ▸ 06/06	1352000001	**506962**	N
Fortwo (98>2006)											
0.6 i	*MC01*	E	599	MCC01D3, MCC01, MCC02D3 MCC02	M	Y		10/98 ▸ 12/06	0004681V002000000	**506677**	N

• **New** Nouveau **Nuevo** Novo **Nuovo** Nieuw **Neu** Yeni Новый Nou

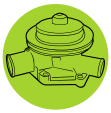

		Type Ctr.		cc					OE	Valeo		
SMART (.../...)												
Fortwo (98>2006) (.../...)												
0.6 i	*MC01*	E	599	MCC02D3, MCC02	A	Y		10/98 ▸ 12/06	0004681V002000000	**506677**	N	
0.8 CDI	*MC01, 450400*	D	799	660.940	M	Y		09/99 ▸ 12/06	0004681V002000000	**506677**	N	
0.8 CDI	*MC01*	D	799	660.940	A	Y		09/99 ▸ 12/06	0004681V002000000	**506677**	N	
Roadster												
0.7 i	*452337, 452437, 452334, 452432 452434*	E	698	160.923, 160.922, 160.921	A	Y		05/03 ▸ 11/05	0004681V002000000	**506677**	N	
SUBARU												
Forester (97>2001)												
2.0 i,2.0 i 16V	*S10*	E	1994	EJ20J, EJ202	M	Y		07/97 ▸ 09/02	21111AA007	**506440**	SS	
2.0 i,2.0 i 16V	*S10*	E	1994	EJ202, EJ20J	A	Y		07/97 ▸ 09/02	21111AA007	**506440**	SS	
Forester (SG) (2002>)												
2.0 X 16V		E	1994	EJ20E	M	Y		09/02 ▸	21111AA007	**506440**	SS	
2.0 X 16V		E	1994	EJ20E	A	Y		09/02 ▸	21111AA007	**506440**	SS	
Forester FL (2005>)												
2.5 XT		E	2457	EJ25	M	Y		08/05 ▸	21111AA007	**506440**	SS	
2.5 XT		E	2457	EJ25	A	Y		08/05 ▸	21111AA007	**506440**	SS	
Impreza (93>2005)												
1.6 i,1.6 i 16V	*GC4, GF4, GC3, GF3*	E	1597	EJ16ENW, EJ16ENM, EJ16ERM EJ16ERW, EJ16ENA, EJ16 EJ161RM, EJ161NW, EJ161RW EJ161NM, EJ161NA	M	Y		01/93 ▸ 07/97	21111AA007	**506440**	SS	
1.6 i,1.6 i 16V	*GC3, GF3*	E	1597	EJ161NA, EJ16, EJ16ENA EJ16ERA, EJ16ENM	A	Y		01/93 ▸ 07/97	21111AA007	**506440**	SS	
1.8 i	*GC6, GF6, GF5, GC5, GF3*	E	1820	EJ18ERW, EJ18ENW, EJ18ENM EJ18ERX, EJ18ERA, EJ181RW	M	Y		01/93 ▸ 07/97	21111AA007	**506440**	SS	
1.8 i	*GC5, GF6, GC6, GF5, GF3*	E	1820	EJ18ERA, EJ181RX, EJ18ENX EJ18ERX, EJ18ENM	A	Y		01/93 ▸ 07/97	21111AA007	**506440**	SS	
2.0 i,2.0 i 16V	*GC7, GC8, GF8*	E	1994	EJ20EN, EJ201	M	Y		12/93 ▸ 07/97	21111AA007	**506440**	SS	
2.0 i Turbo	*GC8, GF8*	E	1994	EJ20GN	M	Y		09/94 ▸ 07/97	21111AA022	**506439**	SS	
2.0 i,2.0 i 16V	*GC8, GF8, GC7*	E	1994	EJ20EN, EJ201	A	Y		08/95 ▸ 07/97	21111AA007	**506440**	SS	
Justy												
1.3 i	*MAG, MAF*	E	1298	G13BA	M	Y		10/95 ▸	1740082851	**506568**	N	
Legacy (89>93)												
1600	*BCH, BFH, BJH*	E	1597	EJ16AR	M	Y		05/89 ▸ 09/94	21111AA007	**506440**	SS	
1600	*BFH, BJH, BCH*	E	1597	EJ16AR	A	Y		05/89 ▸ 09/94	21111AA007	**506440**	SS	
1800 i	*BJ2, BJ3, BF3, BC2, BC3*	E	1820	EJ18AR, EJ18SN	M	Y		05/89 ▸ 09/94	21111AA007	**506440**	SS	
1800 i	*BC2, BC3, BJ2, BF3*	E	1820	EJ18AR, EJ18SN	A	Y		05/89 ▸ 09/94	21111AA007	**506440**	SS	
2000 i,2000 i Turbo	*BC5, BC4*	E	1994	EJ20GN, EJ20EN	M	Y		08/91 ▸ 09/94	21111AA007	**506440**	SS	
2200 i	*BC7, BF6, BC6, BF7*	E	2212	EJ22EN, EJ22ER	M	Y		05/89 ▸ 09/94	21111AA007	**506440**	SS	
2200 i	*BF7, BF6, BC6, BC7*	E	2212	EJ22ER, EJ22EN	A	Y		05/89 ▸ 09/94	21111AA007	**506440**	SS	
Legacy (94>97)												
1.8 i	*BD2*	E	1820	EJ18EN, EJ18JN	M	Y		07/95 ▸ 06/97	21111AA007	**506440**	SS	
1.8 i	*BD2*	E	1820	EJ18JN, EJ18EN	A	Y		07/95 ▸ 06/97	21111AA007	**506440**	SS	
2.0 i	*BD5, BG5, BD4, BG4, BGA*	E	1994	EJ20EN, EJ20ER	M	Y		01/94 ▸	21111AA007	**506440**	SS	
2.0 i	*BG4, BD5, BD4, BG5*	E	1994	EJ20ER, EJ20EN	A	Y		01/94 ▸	21111AA007	**506440**	SS	
2.2 i	*BG6, BD7, BG7, BD6*	E	2212	EJ22ER, EJ22EN	M	Y		01/94 ▸ 06/97	21111AA007	**506440**	SS	
2.2 i	*BG6, BD7, BG8, BG7, BD6*	E	2212	EJ22ER, EJ22EN	A	Y		01/94 ▸ 06/97	21111AA007	**506440**	SS	
SUZUKI												
Alto (SS80)												
0.8	*SS80F*	E	796	F8A	M	Y		10/80 ▸	1740073810	**506923**	N	
▸ 510902												

• **New** Nouveau **Nuevo** Novo **Nuovo** Nieuw **Neu** Yeni Новый Nou

Type Ctr.		cc					2+3	OE	Valeo		
SUZUKI (.../...)											
Alto (SS80) (.../...)											
0.8 *SS80A*	E	796	F8A	A	Y		10/80 ▸	1740073810	**506923**	N	
▸ 510902											
0.8 *SS80F*	E	796	F8A	M	Y		▸ 09/85	1740078820	**506870**	N	
510903 ▸											
0.8 *SS80A*	E	796	F8A	A	Y		▸ 09/85	1740078820	**506870**	N	
510903 ▸											
Alto (SB30)											
0.8 *ECB91, ECA91*	E	796	F8B	M	Y		10/85 ▸ 02/94	1740078821	**506870**	N	
0.8 *ECA91, ECB91*	E	796	F8B	A	Y		10/85 ▸ 02/94	1740078821	**506870**	N	
Baleno											
1.3 i 16V *AEGC1, GC11S, GA11S*	E	1298	G13BB	M	Y		04/95 ▸	1740082851	**506568**	N	
▸ 160000 *2GA21, AEGA1*											
1.5 i 16V *AEGC2*	E	1493	G15A	M	Y		04/95 ▸	1740061820	**506908**	N	
1.6 i 16V *GA31S, GC31S, AEGC3*	E	1590	G16B	M	Y		04/95 ▸	1740060815	**506614**	N	
▸ 140000 *2GA31, AEGB3, 3GB31*											
GC31W, AEGA3, AEGD3											
1.6 i 16V *GC31S, GC31W, AEGC3*	E	1590	G16B	M	Y			1740061820	**506908**	N	
140001 ▸ *2GA31, AEGA3, AEGB3*											
AEGD3, 3GB31, GA31S											
1.8 i 16V *2GB41, AEGA4, 2GA41*	E	1840	J18A	M	Y		06/96 ▸	1740077810	**506904**	N	
AEGC4, GA41S, GC41W											
Cappuccino											
0.7 *EEA11*	E	657	F6A-T	M	Y		01/91 ▸ 03/98	1740050812	**506659**	CR	
Grand Vitara (98>2005)											
1.6 i 16V *JSAFT*	E	1590	G16B	M	Y		05/98 ▸ 02/05	1740061820	**506908**	N	
1.6 i 16V *JSAFT*	E	1590	G16B	A	Y		05/98 ▸ 02/05	1740061820	**506908**	N	
2.0 i 16V *JSAFT*	E	1995	J20A	M	Y		05/98 ▸ 02/05	1740077810	**506904**	N	
2.0 i 16V *JSAFT*	E	1995	J20A	A	Y		05/98 ▸ 02/05	1740077810	**506904**	N	
2.5 i V6 *JSAFT*	E	2494	H25A	M	N		05/98 ▸ 02/05	1740085830	**506903**	N	
2.5 i V6 *JSAFT*	E	2494	H25A	A	N		05/98 ▸ 02/05	1740085830	**506903**	N	
2.0 HDi *JSAFT*	D	1997	RHZ	M	Y		01/01 ▸	1740078E00	**506880**	CR	
2.0 HDi *JSAFT*	D	1997	RHZ	A	Y		01/01 ▸	1740078E00	**506880**	CR	
2.0 TD *JSAFT*	D	1998	RFM	M	Y		05/98 ▸ 02/05	1740078E00	**506880**	CR	
2.0 TD *JSAFT*	D	1998	RFM	A	Y		05/98 ▸	1740078E00	**506880**	CR	
Grand Vitara (2006>)											
1.6 VVT 16V *JB416*	E	1586	M16A	M	Y		03/06 ▸	1740061820	**506908**	N	
2.0 VVT 16V *JB420*	E	1995	J20A	M	Y		03/06 ▸	1740077810	**506904**	N	
2.0 VVT 16V *JB420*	E	1995	J20A	A	Y		03/06 ▸	1740077810	**506904**	N	
Grand Vitara XL7 (2001>)											
2.7 i V6 24V *JSAHT*	E	2737	H27A,H27A-184	M	N		03/01 ▸ 01/04	1740085830	**506903**	N	
2.7 i V6 24V *JSAHT*	E	2737	H27A,H27A-184	A	N		03/01 ▸ 01/04	1740085830	**506903**	N	
Ignis											
1.3 i *FHV51, FHY51, FHX51*	E	1328	M13A	M	Y		09/00 ▸ 08/03	1740069G00	**▲506975**	N	
1.3 i *FHV51, FHX51, FHY51*	E	1328	M13A	A	Y		09/00 ▸ 08/03	1740069G00	**▲506975**	N	
1.5 i 16V *FH*	E	1490	M15A	M	Y		12/00 ▸ 08/03	1740069G00	**▲506975**	N	
1.3 i 16V *RM413*	E	1328	M13AVVT	M	Y		09/03 ▸	1740069G00	**▲506975**	N	
1.5 i 16V *RM415*	E	1490	M15,M15A	M	Y		09/03 ▸	1740069G00	**▲506975**	N	
1.5 i 16V *RM415*	E	1490	M15A	A	Y		09/03 ▸	1740069G00	**▲506975**	N	
1.3 DDiS 16V *RM413*	D	1248	Z13DT	M	Y		09/03 ▸	1741085E00	**506716**	vvv	
Jimny											
1.3 i *FJB33, FJA33*	E	1298	G13BB-E6	M	Y		09/98 ▸	1740083815	**506565**	N	
1.3 i *FJB33, FJA33*	E	1298	G13BB-E6	A	Y		09/98 ▸	1740083815	**506565**	N	
1.3 i 16V	E	1328	M13A	M	Y		04/02 ▸	1740069G00	**▲506975**	N	
▸ 200000											

• **New** Nouveau **Nuevo** Novo **Nuovo** Nieuw **Neu** Yeni Новый Nou

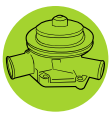

Type Ctr.		cc						OE	Valeo		
SUZUKI (.../...)											
Vitara (.../...)											
2.0 TD *ETD31*	D	1998	RF	A	Y		01/96 ▸	1740078E00	**506880**	CR	
Wagon R+											
1.3 i 16V *TSMMM*	E	1298	G13BB	M	Y		03/00 ▸	1740082823	**506568**	N	
1.3 i 16V *TSMMM*	E	1298	G13BB	A	Y		03/00 ▸	1740082823	**506568**	N	
1.3 DDiS 16V	D	1248	Z13DT	M	Y		03/04 ▸	1741085E00	**506716**	vvv	
X90											
1.6 16V *LAC66*	E	1590	G16BA	M	Y		11/95 ▸	1740060815	**506614**	N	
1.6 16V *LAC69*	E	1590	G16BA	A	Y		11/95 ▸	1740060815	**506614**	N	
SUZUKI											
Carry (ST90V)											
0.8	E	791	F8A	M	Y		11/80 ▸ 10/85	1740073870	**506923**	N	
Carry (GA4)											
1.3 i *JSAFD*	E	1298	G13BB-E6	M	Y		07/99 ▸	1740082823	**506568**	N	
LJ80											
0.8 *JA11Q, JA11V, JA11T, JA11C*	E	796	F8A	M	Y		01/80 ▸ 01/84	1740073810	**506923**	N	
TALBOT											
1100											
1.0 *S3-LA*	E	944	352	M	Y		1974 ▸ 07/76	120145	**506032**	N	
1.1 *S3-DE, T3-DB, S3-JD, S3-DC, T3-DC S3-DB, T3-LA, T3-DE, T3-JD, S3-LA*	E	1118	350, 350S	M	Y		09/74 ▸ 07/81	120145	**506032**	N	
1.1 *T3-JD, T3-DC*	E	1118	350	A	Y		08/79 ▸ 07/81	120145	**506032**	N	
1.2 *FD*	E	1204	353S	M	Y		05/70 ▸ 08/71	120145	**506032**	N	
1.3 *S3-JB*	E	1294	366	M	Y		09/73 ▸ 01/78	120145	**506032**	N	
1307/8/9											
1.3 *S6-MC, S6-MA*	E	1294	G1, G4	M	Y		07/75 ▸ 07/79	120145	**506032**	N	
1.4 *S6-MD*	E	1442	Y2	M	Y		01/78 ▸ 07/79	120145	**506032**	N	
1.6 *S6-MB*	E	1592	J2	A	Y		07/78 ▸ 07/79	120145	**506032**	N	
1510											
1.3 *T6-MC, S6-MC*	E	1294	G1D, G1	M	Y		07/79 ▸ 06/81	120145	**506032**	N	
1.4 *S6-MD, 61A-2, T6-MD*	E	1442	Y2, Y1	M	Y		07/79 ▸ 1982	120145	**506032**	N	
1.6 *61A-3, T6-MB, S6-MB*	E	1592	J2A, J2	M	Y		07/79 ▸ 1982	120145	**506032**	N	
1.6 *61A-3, T6-MB*	E	1592	J2A, J2	A	Y		1980 ▸ 1982	120145	**506032**	N	
Bagheera											
1.3 *X3550*	E	1294	3G4		Y		07/77 ▸ 08/78	120145	**506032**	N	
1.4 *X6552, X6550, X6551, X6553*	E	1442	6Y2, 6Y4, Y4, Y2		Y		07/77 ▸ 06/80	120145	**506032**	N	
Horizon											
1.1 *21A-0, T2-DF*	E	1118	E1A, E1	M	Y		01/78 ▸ 07/85	120145	**506032**	N	
1.3 *21A-1, S2-DG, T2-DG*	E	1294	G1E, G2S, G1A, G1, G1D	M	Y		01/78 ▸ 07/85	120145	**506032**	N	
1.4 *21A-2, T2-DH, T2-DJ, S2-DJ, S2-DH*	E	1442	Y2S, Y1, Y1B, Y2, TALB04	M	Y		10/78 ▸ 1986	120145	**506032**	N	
1.4 *T2-DJ, 21A-2*	E	1442	Y2, Y2S	A	Y		07/79 ▸ 1986	120145	**506032**	N	
1.6 *21A-3, 21A-6, 21A-4*	E	1592	J2A, J2S, J1B	M	Y		07/82 ▸ 1986	120145	**506032**	N	
1.6 *21A-3*	E	1592	J2A, J2S	A	Y		07/83 ▸ 07/84	120145	**506032**	N	
1.7 D *21A-5*	D	1769	XUD7	M	Y		07/83 ▸ 06/85	120163	**506011**	CR	
1.9 D *21A-5*	D	1905	XUD9	M	Y		07/82 ▸ 1986	120163	**506011**	CR	
Murena											
1.6 *53C39*	E	1592	J2	M	Y		1981 ▸ 1983	120145	**506032**	N	
2.2 *53C43*	E	2156	N2	M	Y		1982 ▸ 1983	120145	**506032**	N	

• **New** Nouveau **Nuevo** Novo **Nuovo** Nieuw **Neu** Yeni Новый Nou

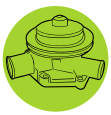

TALBOT (.../...)

Rancho

1.4	*31D33, X3112, X3014, X3013, X3012*	E	1442	Y2		Y		09/77 ▸	120145	**506032**	N	

Solara

1.4	*62B-2, 62B-3, T6-ED, T6-EE*	E	1442	Y1, Y2, Y2S	M	Y		04/80 ▸ 1984	120145	**506032**	N	
1.6	*62B-3, 62B-1, T6-EB*	E	1592	J2A, J1A, J2, J1	M	Y		04/80 ▸ 1985	120145	**506032**	N	
1.6	*T6-EB, 62B-3*	E	1592	J2, J2A	A	Y		04/80 ▸ 1984	120145	**506032**	N	

TOYOTA

4 Runner (60)

2.4 i	*RN61LG*	E	2366	22R-EC	M	Y		12/87 ▸ 12/89	1610039346	**506468**	N	

4 Runner (130)

3.0 i	*VZN130*	E	2959	3VZ-E	M	Y		08/89 ▸ 08/92	1610069225	**506470**	N	
3.0 i	*VZN130*	E	2959	3VZ-E	A	Y		08/90 ▸ 08/92	1610069225	**506470**	N	
2.4 TD	*LN130L*	D	2446	2L-T	M	Y		01/90 ▸ 11/95	1610059256	**506846**	N	
3.0 TD	*KZN130*	D	2982	1KZ-T	M	Y		08/93 ▸ 11/95	1610069356	**506691**	SS	

4 Runner (180)

3.4 i V6	*VZN185*	E	3378	5VZ-FE	M	Y		11/95 ▸ 08/00	1610069397	**506608**	SS	
3.4 i V6	*VZN180, VZN185*	E	3378	5VZ-FE	A	Y		11/95 ▸ 08/02	1610069397	**506608**	SS	

Auris

1.4 VVT-i 16V	*ZZE150*	E	1398	4ZZFE-HTWC	M	Y		10/06 ▸	1610029415	**506844**	SS	
1.6 VVT-i 132 16V	*ZRE151*	E	1598	1ZRFAE-HTWVM	M	Y		01/10 ▸	1610039466	▲**506982**	SS	
1.6 VVT-i 124 16V	*ZRE151*	E	1598	1ZRFE-HTWC	A	Y		01/10 ▸	1610039466	▲**506982**	SS	
1.8 VVT-i 147 16V	*ZRE152*	E	1798	2ZRFAE-HTWVM	M	Y		01/10 ▸	1610039466	▲**506982**	SS	
1.4 D-4D	*NDE150*	D	1364	1NDTV-DCR	M	Y		10/06 ▸	1610039395	**506907**	N	
2.0 D-4D,2.0 D-4D 126	*ADE150*	D	1998	1ADFTV-DCR,1ADFTV-DCRL/F	M	Y		10/06 ▸ 10/09	1610009340	**506905**	SS	

Avensis (97>2000)

1.6 i 16V	*AT220R, AT220L*	E	1587	4A-FEC	M	Y		10/97 ▸ 06/00	1610009051	**506652**	N	
1.8 i 16V	*AT221R, AT221L*	E	1762	7A-FE	M	Y		10/97 ▸ 06/00	1610019305	**506653**	N	
1.8 i 16V	*AT221L, AT221R*	E	1762	7A-FE	A	Y		10/97 ▸ 06/00	1610019305	**506653**	N	
2.0 i 16V	*ST220R, ST220L*	E	1998	3S-FE	M	Y		10/97 ▸ 06/00	1610079185	**506624**	N	
2.0 i 16V	*ST220R, ST220L*	E	1998	3S-FE	A	Y		10/97 ▸ 06/00	1610079185	**506624**	N	
2.0 TD	*CT220L*	D	1974	2C-T, 2C-TE	M	Y		11/98 ▸ 06/00	1610069298	**506543**	SS	
2.0 D-4D 16V	*CDT220*	D	1995	1CDFTV-HDCR	M	Y		08/99 ▸ 06/00	1610029135	**506851**	SS	

Avensis (2000>2003)

1.6 VVTi 16V	*ZZT220*	E	1598	3ZZ-FE	M	Y		07/00 ▸ 01/03	1610029415	**506844**	SS	
1.8 i 16V	*ZZT221*	E	1794	1ZZ-FE	M	Y		07/00 ▸ 01/03	1610029415	**506844**	SS	
1.8 i 16V	*ZZT221*	E	1794	1ZZ-FE	A	Y		07/00 ▸ 01/03	1610029415	**506844**	SS	
2.0 i 16V	*ST220L, ST220R*	E	1998	3S-FE	M	Y		07/00 ▸ 01/03	1610079185	**506624**	N	
2.0 i 16V	*ST220L, ST220R*	E	1998	3S-FE	A	Y		07/00 ▸ 01/03	1610079185	**506624**	N	
2.0 D4 16V	*AZT220*	E	1998	1AZ-FSE	M	Y		07/00 ▸ 01/03	1610028041	●**506843**	CR	
2.0 D4 16V	*AZT220*	E	1998	1AZ-FSE	A	Y		10/00 ▸ 01/03	1610028041	●**506843**	CR	
2.0 D-4D 16V	*CDT220*	D	1995	1CDFTV-HDCR	M	Y		07/00 ▸ 01/03	1610029135	**506851**	SS	

Avensis (2003>2008)

1.6 VVTi 16V	*ZZT250*	E	1598	3ZZ-FE	M	Y		03/01 ▸	1610029415	**506844**	SS	
1.8 VVTi 16V	*ZZT251*	E	1794	1ZZ-FE	M	Y		03/01 ▸	1610029415	**506844**	SS	
1.8 VVTi 16V	*ZZT251*	E	1794	1ZZ-FE	A	Y		03/01 ▸	1610029415	**506844**	SS	
2.0 VVTi 16V	*AZT250*	E	1998	1AZ-FE	M	Y		03/01 ▸	1610029415	**506844**	SS	
2.0 VVTi 16V	*AZT250*	E	1998	1AZ-FE	A	Y		03/01 ▸	1610029415	**506844**	SS	
2.0 D-4 16V,2.0 VVTi 16V	*AZT250*	E	1998	1AZ-FE,1AZ-FSE	M	Y		01/03 ▸ 11/08	1610028041	●**506843**	CR	
2.0 D-4 16V,2.0 VVTi 16V	*AZT250*	E	1998	1AZ-FE,1AZ-FSE	A	Y		01/03 ▸ 11/08	1610028041	●**506843**	CR	
2.4 VVTi 16V	*AZT251*	E	2362	2AZ-FSE	A	Y		09/03 ▸ 11/08	1610028041	●**506843**	CR	
2.0 D-4D 16V	*CDT250*	D	1995	1CDFTV-DCRL	M	Y		03/03 ▸ 04/06	1610029185	**506849**	SS	
2.0 D-4D 16V	*ADT250*	D	1998	1ADFTV-DCR	M	Y		05/06 ▸ 11/08	1610009340	**506905**	SS	
2.2 D-4D 16V	*ADT251*	D	2231	2AD-FTV,2ADFHV-DCRL	M	Y		04/05 ▸ 11/08	1610009340	**506905**	SS	

Avensis (2008>)

2.0 D-4D 126 16V	*ADT270*	D	1998	1ADFTV-DCR/F	M	Y		11/08 ▸	1610009340	**506905**	SS	

• **New** Nouveau **Nuevo** Novo **Nuovo** Nieuw **Neu** Yeni Новый Nou

		D	cc					2 3	OE	Valeo		
TOYOTA (.../...)												
Avensis (2008>) (.../...)												
2.2 D-4D 150 16V 2.2 D-4D 177 16V	ADT271	D	2231	2AD-FTV,2ADFHV-DCRL/F	M	Y		11/08 ▸	1610009340	**506905**	SS	
2.2 D-4D 177 16V	ADT271	D	2231	2ADFHV-DCRL/F	A	Y		02/09 ▸	1610009340	**506905**	SS	
Avensis Verso (2001>2005)												
2.0 VVTi 16V	ACM20R, ACM20L	E	1998	1AZ-FE	M	Y		05/01 ▸ 07/05	1610028041	●**506843**	CR	
2.0 VVTi 16V	ACM20R, ACM20L	E	1998	1AZ-FE	A	Y		05/01 ▸ 07/05	1610028041	●**506843**	CR	
2.0 D-4D 16V	CLM20R, CLM20L	D	1995	1CDFTV-HDCR	M	Y		05/01 ▸ 07/05	1610029135	**506851**	SS	
Aygo												
1.4 D		D	1398	2WZTV	M	Y		05/05 ▸	SU00100596	**506714**	CR	
Camry (82>86)												
1.8	SV10LU, SV10RU	E	1832	1S-L	M	Y		10/82 ▸ 10/86	1610069075	**506938**	CR	
1.8	SV10RU, SV10LU	E	1832	1S-L	A	Y		10/82 ▸ 10/86	1610069075	**506938**	CR	
2.0 i	SV11LU, SV11RU	E	1995	2S-EL,2S-ELC	M	Y		03/83 ▸ 10/86	1610069075	**506938**	CR	
2.0 i	SV11RU, SV11LU	E	1995	2S-EL,2S-ELC	A	Y		03/83 ▸ 10/86	1610069075	**506938**	CR	
Camry (86>91)												
1.8	SV20LU, SV20LG	E	1832	1S-L	M	Y		10/86 ▸ 08/88	1610069075	**506938**	CR	
1.8	SV20LU	E	1832	1S-L	A	Y		10/86 ▸ 08/88	1611069036	**506938**	CR	
2.0 i	SV21LG, SV25LU, SV21LU	E	1996	3S-FE	M	Y		10/86 ▸ 06/91	1610079185	**506624**	N	
2.0 i	SV21LU, SV21LG	E	1996	3S-FE	A	Y		10/86 ▸ 06/91	1610079185	**506624**	N	
2.0 i 16V	SV21LG, SV21RG, SV21LU SV25LU, SV25RU, SV21RU	E	1998	3S-FE	M	Y		10/86 ▸ 06/91	1610079185	**506624**	N	
2.0 i 16V	SV21RG, SV21LU, SV21LG SV21RU	E	1998	3S-FE	A	Y		10/86 ▸ 06/91	1610079185	**506624**	N	
2.5 i V6	VZV21L	E	2507	2VZ-FE	M	Y		02/88 ▸ 06/91	1610069305	**506543**	SS	
2.5 i V6	VZV21R, VZV21L	E	2507	2VZ-FE	A	Y		02/88 ▸ 06/91	1610069305	**506543**	SS	
Camry (91>96)												
2.2 i 16V	SXV10R, SXV10L	E	2164	5S-FE	M	Y		06/91 ▸ 08/96	1610079185	**506624**	N	
2.2 i 16V	SXV10L, SXV10R	E	2164	5S-FE	A	Y		06/91 ▸ 08/96	1610079185	**506624**	N	
3.0 i V6	VCV10L	E	2959	3VZ-FE	M	Y		06/91 ▸ 08/96	1610069335	**506543**	SS	
3.0 i V6	VCV10R, VCV10L	E	2959	3VZ-FE	A	Y		06/91 ▸ 08/96	1610069335	**506543**	SS	
Camry (96>2001)												
2.2 i 16V	SXV20L, SXV20R	E	2164	5S-FE	M	Y		08/96 ▸ 07/01	1610079185	**506624**	N	
2.2 i 16V	SXV20L, SXV20R	E	2164	5S-FE	A	Y		08/96 ▸ 07/01	1610079185	**506624**	N	
3.0 i V6 24V	MCV20R, MCV20L	E	2995	1MZ-FE	A	Y		08/96 ▸ 07/01	1610029085	**506618**	SS	
Camry (2001>2006)												
2.0 i 16V	ACV31R, ACV31L	E	1998	1AZ-FE	A	Y		08/01 ▸ 01/06	1610028041	●**506843**	CR	
2.4 i 16V	ACV30L, ACV30R	E	2362	2AZ-FE	M	Y		08/01 ▸ 01/06	1610028041	●**506843**	CR	
2.4 i 16V	ACV30L, ACV30R	E	2362	2AZ-FE	A	Y		08/01 ▸ 01/06	1610028041	●**506843**	CR	
Camry (2006>2009)												
2.4 i 16V	ACV40R, ACV40L	E	2362	2AZ-FE	M	Y		01/06 ▸ 03/09	1610028041	●**506843**	CR	
2.4 i 16V	ACV40R, ACV40L	E	2362	2AZ-FE	A	Y		01/06 ▸ 03/09	1610028041	●**506843**	CR	
Camry (2009>2011)												
2.4 i 16V	ACV40L, ACV40R	E	2362	2AZ-FE	M	Y		01/09 ▸ 06/11	1610028041	●**506843**	CR	
2.4 i 16V	ACV40L, ACV40R	E	2362	2AZ-FE	A	Y		01/09 ▸ 06/11	1610028041	●**506843**	CR	
Carina (TA4) (77>81)												
1.6	TA40LG, TA40LA	E	1588	2T	M	Y		08/77 ▸ 07/81	1610028020	**506412**	N	
1.6	TA40LA	E	1588	2T	A	Y		08/77 ▸ 07/81	1610028020	**506412**	N	
Carina (TA6) (81>83)												
1.6	TA60LA, TA60RG, TA60RA, TA60LG	E	1588	2T	M	Y		08/81 ▸ 09/83	1610028020	**506412**	N	
1.6	TA60LG, TA60LA, TA60RA	E	1588	2T	A	Y		08/81 ▸ 09/83	1610028020	**506412**	N	
1.8	TA62LA, TA62LG, TA62RA	E	1770	3T, 3T-C	M	Y		08/81 ▸ 09/83	1610028020	**506412**	N	

• **New** Nouveau **Nuevo** Novo **Nuovo** Nieuw **Neu** Yeni Новый Nou

Valeo

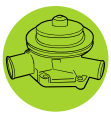

			Type Ctr.		cc					OE	Valeo		
TOYOTA **(.../...)**													
Carina (TA6) (81>83) (.../...)													
1.8	*TA62LA, TA62RA*	E	1770	3T-C, 3T	A	Y		08/81 ▸ 09/83	1610028020	**506412**	N	
Carina II (ST15) (83>87)													
1.6	*AT151*	E	1587	4A	M	Y		09/83 ▸ 12/87	1610019106	**506426**	N	
1.6	*AT151*	E	1587	4A	A	Y		09/83 ▸ 12/87	1610019106	**506426**	N	
1.8 i	*ST150*	E	1832	1S-EL	M	Y		05/85 ▸ 12/87	1610069075	**506938**	CR	
1.8 i	*ST150*	E	1832	1S-EL	A	Y		08/85 ▸ 12/87	1610069075	**506938**	CR	
2.0 i	*ST151*	E	1995	2S-EL	M	Y		04/84 ▸ 12/87	1610069075	**506938**	CR	
2.0 i	*ST151*	E	1995	2S-EL	A	Y		04/84 ▸ 12/87	1610069075	**506938**	CR	
Carina II (ST17) (87>92)													
1.6,1.6 i 16V	*AT171R, AT171L*	E	1587	4A-F, 4A-FC, 4A-FEC	M	Y		12/87 ▸ 11/92	1610019205	**506426**	N	
1.6,1.6 i 16V	*AT171R, AT171L*	E	1587	4A-F, 4A-FC, 4A-FEC	A	Y		12/87 ▸ 03/92	1610019205	**506426**	N	
2.0 i 16V	*ST171R, ST171L*	E	1998	3S-FE, 3S-FEC	M	Y		12/87 ▸ 03/92	1610079185	**506624**	N	
2.0 i 16V	*ST171R, ST171L*	E	1998	3S-FE, 3S-FEC	A	Y		12/87 ▸ 03/92	1610079185	**506624**	N	
Carina E (92>97)													
1.6 i 16V	*AT190L, AT190R*	E	1587	4A-FE	M	Y		12/92 ▸ 12/97	1610019295	**506652**	N	
1.6 i 16V	*AT190L, AT190R*	E	1587	4A-FE	A	Y		12/92 ▸ 12/97	1610019295	**506652**	N	
1.8 i 16V	*AT191R, AT191L*	E	1762	7A-FE	M	Y		12/94 ▸ 10/97	1610009060	**506653**	N	
1.8 i 16V	*AT191L, AT191R*	E	1762	7A-FE	M	Y		12/94 ▸ 01/96	1610009061	**506653**	N	
1.8 i 16V	*AT191L, AT191R*	E	1762	7A-FE	M	Y		01/96 ▸ 10/97	1610019035	**506423**	N	
1.8 i 16V	*AT191R, AT191L*	E	1762	7A-FE	A	Y		01/96 ▸ 01/96	1610009061	**506653**	N	
1.8 i 16V	*AT191L, AT191R*	E	1762	7A-FE	A	Y		01/96 ▸ 10/97	1610019035	**506423**	N	
2.0 i 16V	*ST191L, ST191R*	E	1998	3S-FE, 3S-GE	M	Y		02/92 ▸ 10/97	1610079185	**506624**	N	
2.0 i 16V	*ST191R, ST191L*	E	1998	3S-FE	A	Y		02/92 ▸ 10/97	1610079185	**506624**	N	
Celica (TA/AA6) (77>85)													
1.6 16V	*AA63RB, AA63LB*	E	1587	4A-GE	M	Y		08/83 ▸ 07/85	1610019095	**506939**	N	
Celica (TA/RA4) (77>85)													
1.6	*TA40LB, TA40RB*	E	1588	2T, 2T-B	M	Y		08/77 ▸ 07/81	1610028020	**506412**	N	
1.6	*TA40LB, TA40RB*	E	1588	2T	A	Y		08/77 ▸ 07/81	1610028020	**506412**	N	
Celica (TA/AA6) (77>85)													
1.6	*TA60LB, LBTA60*	E	1588	2T, 2T-B	M	Y		08/81 ▸ 07/85	1610028020	**506412**	N	
1.6	*TA60LB*	E	1588	2T	A	Y		08/81 ▸ 08/83	1610028020	**506412**	N	
2.0	*RA61LB, RA60LB, HA61LB, RA61RB RA60RB*	E	1972	21R, 21R-C	M	Y		08/81 ▸ 08/84	1610039317	**506411**	N	
2.0	*RA61LB, HA61LB, RA61RB*	E	1972	21R, 21R-C	M	Y		08/84 ▸ 07/85	1610039346	**506468**	N	
2.0	*RA60RB, RA61RB, RA60LB, RA61LB*	E	1972	21R-C, 21R	A	Y		08/81 ▸ 08/84	1610039317	**506411**	N	
2.0	*RA61RB, RA61LB*	E	1972	21R	A	Y		08/84 ▸ 07/85	1610039346	**506468**	N	
2.0	*SA63RB*	E	1995	2S-C	M	Y		08/83 ▸ 08/84	1610069075	**506938**	CR	
2.0	*SA63RB*	E	1995	2S-C	A	Y		08/83 ▸ 08/84	1610069075	**506938**	CR	
2.4 i	*RA65RB*	E	2366	22R-EC	M	Y		08/84 ▸ 07/85	1610039346	**506468**	N	
2.4 i	*RA65RB*	E	2366	22R-EC	A	Y		08/84 ▸ 07/85	1610039346	**506468**	N	
Celica (ST16) (85>89)													
1.6	*AT160L*	E	1587	4A-L	M	Y		08/85 ▸ 08/89	1610019106	**506426**	N	
1.6 i 16V	*AT160L*	E	1587	4A-GEL,4A-GELC	M	Y		08/85 ▸ 08/89	1610019115	**506939**	N	
2.0 i Turbo	*ST165R, ST165L*	E	1998	3S-GTE	M	Y		10/87 ▸ 08/89	1610079105	**506433**	CR	
Celica (ST18) (89>93)													
1.6 16V	*AT180L, AT180R*	E	1587	4A-FE	M	Y		10/89 ▸ 10/93	1610019205	**506426**	N	
Celica (ST200) (93>99)													
1.8 i 16V	*AT200L, AT200R*	E	1762	7A-FE	M	Y		11/93 ▸ 07/99	1610019305	**506653**	N	
Celica (ZT230) (99>)													
1.8 VVT-i 16V	*ZZT230*	E	1794	1ZZ-FE	M	Y		08/99 ▸	1610029415	**506844**	SS	
1.8 i 16V	*ZZT231*	E	1796	2ZZ-GE	M	Y		08/00 ▸ 09/05	1610029146	**506906**	N	
Corolla (50) (79>83)													
1.3	*KE70LG, KE70RE, KE70LE, KE70RG*	E	1290	4K, 4K-C	M	Y		08/79 ▸ 06/84	1610019016	**506410**	N	

• **New** Nouveau **Nuevo** Novo **Nuovo** Nieuw **Neu** Yeni Новый Nou

		Type Ctr.	cc					OE	Valeo			
TOYOTA (.../...)												
Corolla (50) (79>83) (.../...)												
1.3	*KE70LG, KE70LE, KE70RE, KE70RG*	E	1290	4K, 4K-C	A	Y		08/79 ▸ 05/83	1610019016	**506410**	N	
1.6	*AE71RG, AE71RE*	E	1587	4A-C	M	Y		05/83 ▸ 06/84	1610019036	**506423**	N	
1.6	*AE71RE*	E	1587	4A-C	A	Y		05/83 ▸ 06/84	1610019036	**506423**	N	
1.6	*TE71LE, TE71LG, TE71RG, TE71RE*	E	1588	2T-B, 2T	M	Y		08/79 ▸ 06/84	1610028020	**506412**	N	
1.6	*TE71LE, TE71RG, TE71LG, TE71RE*	E	1588	2T	A	Y		08/79 ▸ 01/84	1610028020	**506412**	N	
1.8	*TE72RE, TE72LE*	E	1770	3T, 3T-C	M	Y		08/79 ▸ 04/84	1610028020	**506412**	N	
1.8	*TE72RE*	E	1770	3T	A	Y		07/80 ▸ 01/84	1610028020	**506412**	N	
Corolla (80) (83>87)												
1.3	*AE80RE, AE80LE*	E	1295	2A-L, 2A-LC	M	Y		05/83 ▸ 05/86	1610019106	**506426**	N	
1.3	*EE80LE, EE80RE*	E	1295	2E-LC, 2E-L	M	Y		10/84 ▸ 09/87	1610019195	**506610**	vvv	
1.3	*AE80RE, AE80LE*	E	1295	2A-L, 2A-LC	A	Y		05/83 ▸ 05/86	1610019106	**506426**	N	
1.3	*EE80RE, EE80LE*	E	1295	2E-L	A	Y		08/84 ▸ 09/87	1610019195	**506610**	vvv	
1.6	*AE86LE, AE86RE*	E	1587	4A-C, 4A	M	Y		05/83 ▸ 09/87	1610019036	**506423**	N	
1.6	*AE82RE, AE82LE*	E	1587	4A-L, 4A-LC	M	Y		05/83 ▸ 09/87	1610019106	**506426**	N	
1.6	*AE82LE, AE82RE*	E	1587	4A-L, 4A-LC	A	Y		05/83 ▸ 09/87	1610019106	**506426**	N	
1.6	*AE86LE*	E	1587	4A	A	Y		05/83 ▸ 09/87	1610019036	**506423**	N	
1.6 i 16V	*AE86LE, AE86RE*	E	1587	4A-GE,4A-GEC	M	Y		08/83 ▸ 09/87	1610019095	**506939**	N	
Corolla (90) (87>92)												
1.3	*EE90LA, EE90RA*	E	1295	2E, 2E-E	M	Y		05/87 ▸ 05/92	1610019226	**506610**	vvv	
1.3	*EE90LA, EE90RA*	E	1295	2E-E, 2E	A	Y		05/87 ▸ 05/92	1610019226	**506610**	vvv	
1.6,1.6 16V	*AE92LA, AE95RA, AE95LC AE95LA, AE95RC, AE92RA*	E	1587	4A-F, 4A-FE	M	Y		05/87 ▸ 05/92	1610019205	**506426**	N	
1.6,1.6 16V	*AE92LA, AE92RA*	E	1587	4A-F, 4A-FE	A	Y		05/87 ▸ 05/92	1610019205	**506426**	N	
1.6,1.6 16V	*AE92LA, AE92RA*	E	1587	4A-F,4A-FE,4A-GE	M	Y		05/87 ▸ 05/92	1611019165	**506939**	N	
1.6,1.6 16V	*AE92LA, AE92RA*	E	1587	4A-F,4A-FE	A	Y		05/87 ▸ 05/92	1611019165	**506939**	N	
Corolla (100) (92>97)												
1.3	*EE100L*	E	1295	2E	M	Y		05/92 ▸ 04/97	1610019226	**506610**	vvv	
1.3 16V	*EE101L, EE101R*	E	1332	4E-FE	M	Y		05/92 ▸ 04/97	1610019226	**506610**	vvv	
1.3 16V	*EE101L, EE101R*	E	1332	4E-FE	A	Y		05/92 ▸ 04/97	1610019226	**506610**	vvv	
1.6 16V	*AE101L, AE101R*	E	1587	4A-FE	M	Y		05/92 ▸ 04/97	1610019295	**506652**	N	
1.6 16V	*AE101L, AE101R*	E	1587	4A-FE	A	Y		05/92 ▸ 04/97	1610019295	**506652**	N	
1.6 16V	*AE101R, AE101L*	E	1587	4A-FE	M	Y		05/92 ▸ 04/97	1611019146	**506942**	N	
1.6 16V	*AE101R, AE101L*	E	1587	4A-FE	A	Y		05/92 ▸ 04/97	1611019146	**506942**	N	
1.8 16V	*AE102R, AE103L, AE102L*	E	1762	7A-FE	M	Y		11/92 ▸ 04/97	1610019305	**506653**	N	
Corolla (110) (97>99)												
1.3 i 12V	*EE110L*	E	1295	2E	M	Y		04/97 ▸ 11/98	1610019226	**506610**	vvv	
1.3 i 16V	*EE111R, EE111L*	E	1332	4E-FE	M	Y		04/97 ▸ 09/99	1610019226	**506610**	vvv	
1.3 i 16V	*EE111R, EE111L*	E	1332	4E-FE	A	Y		04/97 ▸ 09/99	1610019226	**506610**	vvv	
1.6 i 16V	*AE111R, AE111L*	E	1587	4A-FE	M	Y		04/97 ▸ 09/99	1610019295	**506652**	N	
1.6 i 16V	*AE111L, AE111R*	E	1587	4A-FE	A	Y		04/97 ▸ 09/99	1610019295	**506652**	N	
1.8 i 16V	*AE115L*	E	1762	7A-FE	M	Y		04/97 ▸	1610019305	**506653**	N	
Corolla (110) (99>2001)												
1.3 i 12V	*EE110L*	E	1295	2E	M	Y		10/99 ▸ 07/01	1610019226	**506610**	vvv	
1.4 i 16V	*ZZE111*	E	1398	4ZZ-FE	M	Y		10/99 ▸ 10/01	1610029415	**506844**	SS	
1.6 VVTi 16V	*ZZE112*	E	1598	3ZZ-FE	M	Y		10/99 ▸ 10/01	1610029415	**506844**	SS	
1.6 VVTi 16V	*ZZE112*	E	1598	3ZZ-FE	A	Y		10/99 ▸ 10/01	1610029415	**506844**	SS	
1.8 i 16V	*AE115L*	E	1762	7A-FE	M	Y		10/99 ▸ 10/01	1610019305	**506653**	N	
2.0 D-4D 16V	*CDE110*	D	1995	1CDFTV-DCR	M	Y		08/00 ▸ 10/01	1610029135	**506851**	SS	
Corolla (120) (2001>)												
1.4 i 16V	*ZZE120*	E	1398	4ZZ-FE	M	Y		10/01 ▸	1610029175	**506844**	SS	
1.6 VVT-i 16V	*ZZE121*	E	1598	3ZZ-FE	M	Y		10/01 ▸	1610029175	**506844**	SS	
1.6 VVT-i 16V	*ZZE121*	E	1598	3ZZ-FE	A	Y		10/01 ▸	1610029175	**506844**	SS	
1.8 i 16V	*ZZE123*	E	1796	2ZZ-GE	M	Y		11/01 ▸	1610009130	**506844**	SS	
1.8 i 16V	*ZZE123*	E	1796	2ZZ-GE	M	Y		11/01 ▸ 02/07	1610029146	**506906**	N	
1.4 D4-D	*NDE120*	D	1364	1NDTV	M	Y		08/04 ▸ 02/07	1610039395	**506907**	N	
2.0 D4-D 16V	*CDE120*	D	1995	1CDFTV-DCRL	M	Y		06/04 ▸ 02/07	1610029185	**506849**	SS	

• **New** Nouveau **Nuevo** Novo **Nuovo** Nieuw **Neu** Yeni Новый Nou

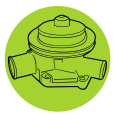

		Type Ctrl.		cc					OE	Valeo		
TOYOTA **(.../...)**												
Corolla (120) (2001>) (.../...)												
2.0 D4-D 16V	*CDE120*	D	1995	1CDFTV-DCR,1CDFTV-DCRL 1CDFTV-HDCR	M	Y		10/01 ▸ 02/07	1610029135	**506851**	SS	
Corolla (150) (2006>)												
1.4 VVT-i 16V	*ZZE150*	E	1398	4ZZFE-HTWC	M	Y		11/06 ▸ 12/08	1610029415	**506844**	SS	
1.6 VVT-i 16V	*ZRE151*	E	1598	1ZRFAE-HTWVM,1ZRFE-HTWC	M	Y		11/06 ▸	1610039465	**▲506982**	SS	
1.6 VVT-i 16V	*ZRE151*	E	1598	1ZRFE-HTWC	A	Y		06/09 ▸ 04/10	1610039466	**▲506982**	SS	
1.4 D-4D	*NDE150*	D	1364	1NDTV-DCR	M	Y		11/06 ▸ 12/08	1610039395	**506907**	N	
2.0 D-4D 16V	*ADE150*	D	1998	1ADFTV-DCR,1ADFTV-DCRL/F	M	Y		11/06 ▸ 01/09	1610009340	**506905**	SS	
Corolla Verso (2001>2003)												
1.6 VVTi 16V	*ZZE121*	E	1598	3ZZ-FE	M	Y		10/01 ▸	1610029415	**506844**	SS	
1.8 VVTi 16V	*ZZE122*	E	1794	1ZZ-FE	M	Y		09/01 ▸	1610029415	**506844**	SS	
1.8 VVTi 16V	*ZZE122*	E	1794	1ZZ-FE	A	Y		09/01 ▸	1610029415	**506844**	SS	
2.0 D4-D 16V	*CDE120*	D	1995	1CDFTV-DCR,1CDFTV-HDCR	M	Y		10/01 ▸ 12/03	1610029135	**506851**	SS	
Corolla Verso (2004>2009)												
1.6 VVTi	*ZNR10L, ZNR10R*	E	1598	3ZZ-FE	M	Y		02/04 ▸	1610029415	**506844**	SS	
1.8 VVTi 16V	*ZNR11L, ZNR11R*	E	1794	1ZZ-FE	M	Y		02/04 ▸	1610029415	**506844**	SS	
2.0 D4-D 16V	*CUR10L, CUR10R*	D	1995	1CDFTV-DCRL	M	Y		02/04 ▸ 08/05	1610029185	**506849**	SS	
2.2 D4-D 16V	*AUR10R, AUR10L*	D	2231	2AD-FTV,2ADFHV-DCRL	M	Y		08/05 ▸ 02/09	1610009340	**506905**	SS	
Corolla Verso (2009>)												
1.6 VVT-i 132 16V	*ZGR20L, ZGR20R*	E	1598	1ZRFAE-HTWVM	M	Y		02/09 ▸	1610039466	**▲506982**	SS	
1.8 VVT-i 147 16V	*ZGR21R, ZGR21L*	E	1798	2ZRFAE-HTWVM	M	Y		02/09 ▸	1610039466	**▲506982**	SS	
1.8 VVT-i 147 16V	*ZGR21L, ZGR21R*	E	1798	2ZRFAE-HTWVM	A	Y		02/09 ▸	1610039466	**▲506982**	SS	
2.0 D-4D 126 16V	*AUR20L, AUR20R*	D	1998	1ADFTV-DCR	M	Y		02/09 ▸	1610009340	**506905**	SS	
2.2 D-CAT 177 16V	*AUR21L, AUR21R*	D	2231	2ADFHV-DCRL/F	M	Y		02/09 ▸	1610009340	**506905**	SS	
2.2 D-CAT 150 16V	*AUR21L, AUR21R*	D	2231	2ADFHV-DCRL/F	A	Y		02/09 ▸	1610009340	**506905**	SS	
Cressida II (80>85)												
2.0	*G2-RX6*	E	1972	21R-C, 21R	M	Y		09/80 ▸	1610039315	**506411**	N	
2.0	*G2-RX6*	E	1972	21R-C, 21R	A	Y		09/80 ▸	1610039315	**506411**	N	
Land Cruiser (BJ40)												
4.0 D	*HJ47RP, HJ47RV*	D	3980	2H	M	Y		08/80 ▸ 10/84	1610069036	**506881**	CR	
Land Cruiser (BJ80)												
4.5 i	*FZJ80L*	E	4477	1FZ-FE	M	Y		01/95 ▸ 01/98	1610069325	**506691**	SS	
4.5 i	*FZJ80L, FZJ80R*	E	4477	1FZ-FE	A	Y		08/92 ▸ 01/98	1610069325	**506691**	SS	
4.2 D,4.2 TD	*HDJ80L, HDJ80R, HZJ80L*	D	4164	1HD-T, 1HZ, 1HD-FT	M	Y		01/90 ▸ 01/98	1610019235	**506847**	N	
4.2 D,4.2 TD	*HZJ80L, HDJ80L, HDJ80R*	D	4164	1HZ, 1HD-T	A	Y		01/90 ▸ 01/95	1610019235	**506847**	N	
Land Cruiser (HD/UZ 10)												
4.2 TD	*HDJ100*	D	4164	1HD-FTE	M	Y		08/00 ▸ 08/02	1610019235	**506847**	N	
4.2 TD	*HDJ100*	D	4164	1HD-FTE	A	Y		01/98 ▸	1610019235	**506847**	N	
Land Cruiser (KZ/VZ9)												
3.4 i V6	*VZJ90L, VZJ95L*	E	3378	5VZ-FE	M	Y		04/96 ▸	1610069397	**506608**	SS	
3.4 i V6	*VZJ95R, VZJ95L, VZJ90L*	E	3378	5VZ-FE	A	Y		04/96 ▸	1610069397	**506608**	SS	
3.0 TD	*KZJ95L, KZJ90L, KDJ90L KZJ95R, KZJ90R, KDJ95L KDJ90R, KDJ95R*	D	2982	1KZ-TE, 1KD-FTV	M	Y		04/96 ▸	1610069356	**506691**	SS	
3.0 TD	*KZJ95L, KDJ90L, KZJ90L KZJ95R, KDJ95L, KDJ95R*	D	2982	1KZ-TE, 1KD-FTV	A	Y		04/96 ▸	1610069356	**506691**	SS	
Land Cruiser (2002>)												
4.0		E	3956	1GR-FE	M	Y		01/03 ▸	1610009470	**●506979**	N	
3.0 D-4D 16V	*KDJ125, KDJ120*	D	2982	1KD-FTV	M	Y		09/02 ▸	1610069356	**506691**	SS	
3.0 D-4D 16V	*KDJ125, KDJ120*	D	2982	1KD-FTV	A	Y		09/02 ▸	1610069356	**506691**	SS	
MR 2 (AW11)												
1.6 i 16V	*AW11LW, AW11RW*	E	1587	4A-GEL,4A-GELC	M	Y		11/84 ▸ 10/89	1610019115	**506939**	N	

• **New** Nouveau **Nuevo** Novo **Nuovo** Nieuw **Neu** Yeni Новый Nou

		Type Ctr.		cc					OE	Valeo		
TOYOTA (.../...)												
MR 2 (AW20)												
2.0 i 16V	*SW20KA*	E	1998	3S-FE	M	Y		12/89 ▸ 08/92	1610079135	**506624**	N	
2.0 i 16V	*SW20RA*	E	1998	3S-FE	A	Y		12/89 ▸ 12/91	1610079135	**506624**	N	
MR 2 (AW30)												
1.8 VVT-i 16V	*ZZW30R, ZZW30L*	E	1794	1ZZ-FE	M	Y		12/99 ▸	1610029415	**506844**	SS	
Paseo (91>95)												
1.5 i 16V	*JT2EL4, JTA63E*	E	1496	5E-FE	M	Y		04/91 ▸ 08/95	1610019226	**506610**	vvv	
1.5 i 16V	*JTA63E, JT2EL4*	E	1496	5E-FE	A	Y		04/91 ▸ 08/95	1610019226	**506610**	vvv	
Paseo (95>99)												
1.5 i 16V	*EL54RD, EL54LD*	E	1496	5E-FE	M	Y		08/95 ▸ 07/99	1610019226	**506610**	vvv	
1.5 i 16V	*EL54LD, EL54RD*	E	1496	5E-FE	A	Y		08/95 ▸ 07/99	1610019226	**506610**	vvv	
Picnic (96>2001)												
2.0 i 16V	*SXM10L, SXM10R*	E	1998	3S-FEC	M	Y		09/96 ▸ 05/01	1610079185	**506624**	N	
2.0 i 16V	*SXM10L, SXM10R*	E	1998	3S-FEC	A	Y		09/96 ▸ 05/01	1610079185	**506624**	N	
Picnic (2001>2005)												
2.0 VVTi 16V	*ACM20R, ACM20L*	E	1998	1AZ-FE	M	Y		05/01 ▸ 07/05	1610028041	●**506843**	CR	
2.0 VVTi 16V	*ACM20L, ACM20R*	E	1998	1AZ-FE	A	Y		05/01 ▸ 07/05	1610028041	●**506843**	CR	
2.0 D-4D 16V	*CLM20R, CLM20L*	D	1995	1CDFTV-HDCR	M	Y		05/01 ▸ 07/05	1610029135	**506851**	SS	
Previa (TCR) (90>2000)												
2.4	*TCR10L, TCR21R, TCR11R, TCR20R TCR20L, TCR10R, TCR11L, TCR21L*	E	2438	2TZ-FE	M	Y		05/90 ▸ 1999	1610079165	**506627**	N	
2.4	*TCR10R, TCR20R, TCR11R, TCR21R TCR10L, TCR11L*	E	2438	2TZ-FE	A	Y		05/90 ▸ 1999	1610079165	**506627**	N	
Previa (R30) (2000>)												
2.4 VVTi 16V	*ACR30L, ACR30R*	E	2362	2AZ-FE	M	Y		02/00 ▸ 01/06	1610028041	●**506843**	CR	
2.4 VVTi 16V	*ACR30R, ACR30L*	E	2362	2AZ-FE	A	Y		02/00 ▸ 01/06	1610028041	●**506843**	CR	
2.0 D-4D 16V	*CLR30*	D	1995	1CDFTV-HDCR	M	Y		02/01 ▸	1610029135	**506851**	SS	
Prius (2000>2003)												
1.5 i 16V	*NHW11R, NHW11L*	E	1497	1NZ-FXE	A	Y		05/00 ▸ 07/03	1610029155	**506848**	N	
Prius (2003>)												
1.5 i 16V	*NHW20R, NHW20L*	E	1497	1NZ-FXE	A	Y		08/03 ▸	1610029155	**506848**	N	
RAV 4 (94>2000)												
2.0 i 16V	*SXA11R, SXA10L, SXA10R SXA11L*	E	1998	3S-FE, 3S-FEC	M	Y		04/94 ▸	1610079185	**506624**	N	
2.0 i 16V	*SXA11R, SXA11L, SXA10L SXA10R*	E	1998	3S-FEC, 3S-FE	A	Y		04/94 ▸	1610079185	**506624**	N	
RAV 4 (2000>2005)												
1.8 i 16V	*ZCA25R, ZCA25L, ZCA26R ZCA26L*	E	1794	1ZZ-FE	M	Y		05/00 ▸	1610029415	**506844**	SS	
2.0 VVT-i 16V 2.0 VVTi 16V,2.0 i 16V	*ACA20R, ACA21L, ACA30R* *ACA21R, ACA20L, ACA30L*	E	1998	1AZ-FE	M	Y		05/00 ▸	1610028041	●**506843**	CR	
2.0 VVT-i 16V 2.0 VVTi 16V,2.0 i 16V	*ACA30R, ACA21R, ACA20R* *ACA21L, ACA30L, ACA20L*	E	1998	1AZ-FE	A	Y		05/00 ▸	1610028041	●**506843**	CR	
2.0 D-4D 16V	*CLA20L, CLA21L, CLA20R CLA21R*	D	1995	1CDFTV-DCRL	M	Y		05/01 ▸ 11/05	1610029135	**506851**	SS	
RAV4 (2006>)												
2.0 VVTi 158 16V	*ZSA30R, ZSA35L, ZSA35R ZSA30L*	E	1987	3ZR-FAE-HTWVM	M	Y		06/09 ▸	1610039466	▲**506982**	SS	
2.0 VVTi 158 16V	*ZSA30L, ZSA30R*	E	1987	3ZR-FAE-HTWVM	A	Y		06/09 ▸	1610039466	▲**506982**	SS	
RAV 4 (2006>)												
2.4 VVTi 16V	*ACA31L, ACA33L*	E	2362	2AZ-FE	A	Y		01/07 ▸	1610028041	●**506843**	CR	

• **New** Nouveau **Nuevo** Novo **Nuovo** Nieuw **Neu** Yeni Новый Nou

Valeo

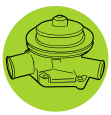

			Type Ctrl.		cc					OE	Valeo		
TOYOTA (.../...)													
RAV 4 (2006>) (.../...)													
2.2 D-4D 16V	*ALA30L, ALA30R*	D		2231	2AD-FTV,2ADFHV-DCRL 2ADFTV-DCRE/F	M	Y		11/05 ▸	1610009340	**506905**	SS	
2.2 D-4D 16V	*ALA30R, ALA30L*	D		2231	2ADFHV-DCRL/F	A	Y		03/09 ▸	1610009340	**506905**	SS	
Starlet (EP7) (84>89)													
1.0	*EP70RP, EP70LP*	E		999	1E-L	M	Y		10/84 ▸ 12/89	1610019226	**506610**	vvv	
1.3	*EP71LP, EP71RP*	E		1295	2E-L, 2E-LC	M	Y		10/84 ▸ 12/89	1610019195	**506610**	vvv	
1.3	*EP71LP*	E		1295	2E-L	A	Y		10/84 ▸ 12/89	1610019195	**506610**	vvv	
Starlet (EP/NP8) (89>95)													
1.0	*EP80RA, EP80LA*	E		999	1E	M	Y		12/89 ▸ 12/92	1610019226	**506610**	vvv	
1.3,1.3 i	*EP81LA, EP81RA*	E		1295	2E, 2E-E	M	Y		12/89 ▸ 12/95	1610019226	**506610**	vvv	
1.3,1.3 i	*EP81LA*	E		1295	2E-E, 2E	A	Y		12/89 ▸ 12/95	1610019226	**506610**	vvv	
Starlet (EP91) (96>)													
1.3 i 16V	*EP91LA, EP91RA*	E		1332	4E-FE	M	Y		01/96 ▸ 07/99	1610019226	**506610**	vvv	
1.3 i 16V	*EP91RA, EP91LA*	E		1332	4E-FE	A	Y		01/96 ▸ 07/99	1610019226	**506610**	vvv	
Supra (MA70) (86>93)													
3.0,3.0 Turbo	*MA70RB, MA70LB*	E		2954	7M-GE, 7M-GTE, 7M-GTEK	M	Y		01/86 ▸ 04/93	1610049805	**506625**	N	
3.0,3.0 Turbo	*MA70RB, MA70LB*	E		2954	7M-GTE, 7M-GE, 7M-GEK	A	Y		01/86 ▸ 04/93	1610049805	**506625**	N	
Supra (JZA80) (93>)													
3.0 i,3.0 i Turbo	*JZA80R, JZA80L*	E		2997	2JZ-GE, 2JZ-GTE	M	Y		05/93 ▸ 05/96	1610049846	**506542**	N	
3.0 i,3.0 i Turbo	*JZA80L, JZA80R*	E		2997	2JZ-GTE, 2JZ-GE	A	Y		05/93 ▸ 05/96	1610049846	**506542**	N	
Yaris													
1.0 i 16V	*SCP10L, SCP10R*	E		998	1SZ-FE	M	Y		06/03 ▸ 11/05	1610009141	**506708**	N	
1.3 VVTi 16V	*SCP12L, SCP12R*	E		1298	2SZ-FE	M	Y		06/03 ▸ 11/05	1610009141	**506708**	N	
1.3 VVTi 16V	*SCP12L, SCP12R*	E		1298	2SZ-FE	A	Y		06/03 ▸ 11/05	1610009141	**506708**	N	
Yaris (NCP/SCP) JPP													
1.0 i 16V	*SCP10R, SCP10L*	E		998	1SZ-FE	M	Y		01/99 ▸ 12/02	1610029116	**506707**	N	
1.0 i 16V	*SCP10L, SCP10R*	E		998	1SZ-FE	M	Y		01/99 ▸ 12/02	1610029125	**506708**	N	
1.3 i 16V	*NCP10R, NCP10L*	E		1299	2NZ-FE	M	Y		06/99 ▸	1610029155	**506848**	N	
1.3 i 16V	*NCP10R, NCP10L*	E		1299	2NZ-FE	A	Y		06/99 ▸	1610029155	**506848**	N	
1.5 VVTi 16V	*NCP13L, NCP13R*	E		1497	1NZ-FE	M	Y		01/01 ▸	1610029155	**506848**	N	
1.4 D-4D	*NLP10L, NLP10R*	D		1364	1ND-TV	M	Y		10/01 ▸	1610029195	**506848**	N	
Yaris (KS/NL/SCP90) (2005>)													
1.3 VVTi 16V	*SCP90L, SCP90R*	E		1298	2SZ-FE	M	Y		11/05 ▸	1610009141	**506708**	N	
1.4 D4-D	*NLP90R, NLP90L*	D		1364	1NDTV	M	Y		01/06 ▸ 11/08	1610039395	**506907**	N	
Yaris Verso													
1.4 D-4D	*NLP22R, NLP22L, NLP20R NLP20L*	D		1364	1ND-TV	M	Y		10/01 ▸	1610029155	**506848**	N	
TOYOTA													
Dyna 100													
1.8	*YH81LM*	E		1812	2Y	M	Y		08/87 ▸ 04/95	1610059256	**506846**	N	
2.4 D	*LY100L, LH80LM*	D		2446	2L	M	Y		08/00 ▸ 08/01	1610059257	**506846**	N	
Dyna 150													
2.8,3.4	*LY211, LY61*			-			Y		09/88 ▸ 08/98	1610059256	**506846**	N	
Hiace (LH/RZH 100)													
2.0	*RZH102, RZH112*	E		1998	1RZ	M	Y		08/89 ▸ 07/95	1610079155	**506928**	N	
2.0	*RZH112*	E		1998	1RZ	A	Y		08/89 ▸ 08/91	1610079155	**506928**	N	
2.4 i	*RZH113, RZH103, RZH115, RZH119 RZH109*	E		2438	2RZ-E	M	Y		08/89 ▸ 07/95	1610079155	**506928**	N	
2.4 i	*RZH113*	E		2438	2RZ-E	A	Y		08/89 ▸ 07/95	1610079155	**506928**	N	

• **New** Nouveau **Nuevo** Novo **Nuovo** Nieuw **Neu** Yeni Новый Nou

Type Ctr.		cc						OE	Valeo		
TOYOTA (.../...)											
Hiace (LH/RZH 100) (.../...)											
2.4 D	*LH112L, LH102L, LH108L, LH118L LH112R, LH102R*	D	2446	2L	M	Y		08/89 ▸	1610059256	**506846**	N
2.4 D	*LH112L*	D	2446	2L	A	Y		08/89 ▸	1610059256	**506846**	N
Hiace (RCH/LXH 10-20)											
2.4 i	*RCH28L, RCH12L, RCH18L, RCH22L RCH12R, RCH22R*	E	2438	2RZ-E	M	Y		08/95 ▸ 11/03	1610079455	**506928**	N
2.4 i	*RCH12L*	E	2438	2RZ-E	A	Y		08/95 ▸ 04/98	1610079455	**506928**	N
2.4 D,2.4 TD	*LXH22L, LXH12L, LHX12R LXH12R, LXH28L, LXH18L LXH22R*	D	2446	2L-T, 2L	M	Y		08/00 ▸ 08/01	1610059257	**506846**	N
2.5 D-4D	*KLH12L, KLH22L, KLH18L KLH22R, KLH12R, KLH28L*	D	2494	2KD-FTV	M	Y		08/01 ▸ 08/06	1610069356	**506691**	SS
2.5 D-4D	*KLH22L, KLH12L*	D	2494	2KD-FTV	A	Y		08/01 ▸ 08/06	1610069356	**506691**	SS
Hilux (LN KD RZ)											
2.4 i	*RZN168, RZN173*	E	2438	2RZ-FE	M	Y		08/97 ▸ 08/01	1610079455	**506928**	N
Hilux (RN/YN/LN 5-6)											
2.4	*RN55LM, RN50LK, RN55LK, RN50LM*	E	2366	22R	M	Y		01/86 ▸ 08/88	1610039346	**506468**	N
2.4 D	*LN51RM, LN65RM, LN56RM*	D	2446	2L	M	Y		08/95 ▸ 07/98	1610059256	**506846**	N
Hilux (KUN25/15)											
4.0		E	3956	1GR-FE	M	Y		08/05 ▸	1610009470	●**506979**	N
VAUXHALL											
Agila											
1.0 i 12V		E	973	Z10XE	M	Y		06/00 ▸	93182029	**506601**	N
1.0 i Twinport 12V		E	998	Z10XEP	M	Y		08/03 ▸	93182029	**506601**	N
1.2 i 16V		E	1199	Z12XE	M	Y		07/00 ▸	93182029	**506601**	N
1.2 i Twinport 16V		E	1229	Z12XEP	M	Y		09/04 ▸	93182029	**506601**	N
1.3 CDTi 16V		D	1248	Z13DT	M	Y		09/04 ▸	93177340	**506716**	vvv
Agila (2007>)											
1.3 CDTi 16V		D	1248	Z13DTJ	M	Y		12/07 ▸	93195466	●**506983**	V
Antara (2006>)											
2.4 i 16V		E	2450	Z24XE	M	Y		10/06 ▸	24409355	**506856**	CR
2.4 i 16V		E	2450	Z24XE	A	Y		10/06 ▸	24409355	**506856**	CR
Astra I (80>84)											
1.3	*43, 44, 45, 35*	E	1297	13S	M	Y		02/80 ▸ 10/84	90349241	**506006**	CR
1.3	*44, 45, 43*	E	1297	13S	A	Y		02/80 ▸ 10/84	90349241	**506006**	CR
1.6	*OTD08, OTD35, OTD48, OTC0/8*	E	1598	16S,16SH	M	Y		12/81 ▸ 10/84	90273924	**506003**	CR
1.6	*OTD35, OTD48, OTC0/8*	E	1598	16S,16SH	A	Y		12/81 ▸ 10/84	90273924	**506003**	CR
1.8 i		E	1796	18E	M	Y		04/83 ▸ 10/84	90273924	**506003**	CR
Astra II (84>91)											
1.2 02J22350 ▸		E	1196	12ST	M	Y		▸ 09/91	R1160012	**506007**	CR
1.2 ▸ 02J22349		E	1196	12ST	M	Y		10/84 ▸	90409912	**506031**	N
1.3		E	1297	13S	M	Y		10/84 ▸ 10/89	R1160013	**506006**	CR
1.4 i 02J22350 ▸	*TC15J, TC35J, TC08/J/X, TD08J TD48J, TC48/J/X*	E	1389	C14NZ	M	Y		10/89 ▸ 09/91	R1160012	**506007**	CR
1.4 i ▸ 19311737	*TC15J, TC35J, TC08/J/X, TD08J TD48J, TC48/J/X*	E	1389	C14NZ	M	Y		10/89 ▸	90349240	**506030**	CR
1.6,1.6 i 02J22350 ▸	*TC48B, TD35B, TD48B, TC08 B*	E	1598	16SV, C16NZ	M	Y		▸ 09/91	R1160012	**506007**	CR
1.6 i 02J22350 ▸	*TC48B, TD35B, TD48B, TC08/B*	E	1598	C16NZ	A	Y		▸ 09/91	R1160012	**506007**	CR

• **New** Nouveau **Nuevo** Novo **Nuovo** Nieuw **Neu** Yeni Новый Nou

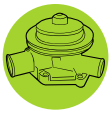

VAUXHALL (.../...)

Astra II (84>91) (.../...)												
1.6,1.6 i ▸ 02J22349	TC48B, TD35B, TD48B, TC08 B	E	1598	C16NZ, 16SV	M	Y		10/84 ▸	90349240	**506030**	CR	
1.6 i ▸ 02J22349	TC48B, TD35B, TD48B, TC08/B	E	1598	C16NZ	A	Y		08/86 ▸	90349240	**506030**	CR	
1.8 i	TC35E, TC48E, TD48E, TC08/E	E	1796	18SE	M	Y		10/84 ▸ 09/91	90444123	**506310**	CR	
1.8 i	TD48E	E	1796	18SE	A	Y		01/89 ▸ 09/91	90444123	**506310**	CR	
1.8 i ▸ 14056060	TC35E, TC48E, TD48E, TC08/E	E	1796	18SE	M	Y		10/84 ▸	R1160009	**506003**	CR	
1.8 i ▸ 14056060	TD48E	E	1796	18SE	A	Y		01/89 ▸	R1160009	**506003**	CR	
1.8 i 14056061 ▸ 14270600	TC35E, TC48E, TD48E, TC08/E	E	1796	18SE	M	Y			R1160018	**506005**	CR	
1.8 i 14056061 ▸ 14270600	TD48E	E	1796	18SE	A	Y			R1160018	**506005**	CR	
2.0 i ▸ 14608701	TD08H	E	1998	C20NE	M	Y		▸ 09/91	90444123	**506310**	CR	
2.0 i 16V ▸ 14142839	TD08W	E	1998	C20XE	M	Y		▸ 09/91	24409355	**506856**	CR	
2.0 i 16V ▸ 14142839	TD08W	E	1998	C20XE	M	Y		▸ 09/91	90444311	**506309**	CR	
2.0 i		E	1998	20SEH, C20NE	M	Y		03/87 ▸	R1160018	**506005**	CR	
2.0 i 16V ▸ 14142838	TD08W	E	1998	C20XE	M	Y		05/88 ▸	90442207	**506080**	CR	
1.6 D ▸ 14498631		D	1598	16D	M	Y		▸ 01/89	R1160020	**506087**	CR	
1.7 D ▸ 14363650	TD35L, TD48L	D	1699	17D	M	Y		▸ 09/91	90444311	**506309**	CR	
1.7 D ▸ 14363650	TD35L, TD48L	D	1699	17D	M	Y		▸ 09/91	24409355	**506856**	CR	
1.7 D ▸ 14363649	TD35L, TD48L	D	1699	17D	M	Y		01/89 ▸	R1160020	**506087**	CR	
Astra III (91>98)												
1.4,1.4 i		E	1389	C14SE, 14NV, C14NZ, X14NZ C14NV	M	Y		09/91 ▸ 03/98	R1160012	**506007**	CR	
1.4 i 16V		E	1389	X14XE	M	Y	23 teeth	09/94 ▸ 03/98	90444079	**506308**	CR	
1.6 i		E	1598	C16SE, X16SZ, C16NZ, X16SZR	M	Y		09/91 ▸ 03/98	R1160012	**506007**	CR	
1.6 i		E	1598	16LZ2	M	Y		10/91 ▸ 03/98	90444123	**506310**	CR	
1.6 i 16V		E	1598	X16XEL	M	Y	23 teeth	08/94 ▸ 03/98	90444079	**506308**	CR	
1.8 i		E	1796	C18NZ	M	Y		▸ 07/94	90441123	**506310**	CR	
1.8 i		E	1796	C18NZ	M	Y		10/91 ▸	R1160018	**506005**	CR	
1.8 i 16V		E	1799	C18XE, C18XEL	M	Y		06/93 ▸ 03/98	90444311	**506309**	CR	
1.8 i 16V		E	1799	C18XEL, X18XE, C18XE	M	Y		06/93 ▸ 03/01	24409355	**506856**	CR	
2.0 i 16V		E	1998	X20XEV, C20XE	M	Y		▸ 03/98	24409355	**506856**	CR	
2.0 i		E	1998	C20NE	M	Y		▸ 03/98	90441123	**506310**	CR	
2.0 i		E	1998	C20NE	M	Y		09/91 ▸	R1160018	**506005**	CR	
2.0 i 16V		E	1998	C20XE	M	Y		10/91 ▸	90442207	**506080**	CR	
2.0 i 16V		E	1998	X20XEV	M	Y		04/95 ▸ 03/98	90444311	**506309**	CR	
1.7 TD Turbo		D	1686	17TD	M	Y		▸ 03/98	R1160036	**506481**	N	
1.7 TD Turbo		D	1686	17TD	M	Y		09/91 ▸ 03/98	24409355	**506856**	CR	
1.7 TD Turbo		D	1686	17TD	M	Y		09/91 ▸ 03/98	90444311	**506309**	CR	
1.7 TD Turbo		D	1686	17TD	M	Y		09/91 ▸	R1160028	**506153**	N	
1.7 D,1.7 TD Turbo		D	1699	X17DTL, 17D, 17DR	M	Y		▸ 03/98	90444311	**506309**	CR	
1.7 D,1.7 TD Turbo		D	1699	X17DTL, 17DR, 17D	M	Y		▸ 03/98	24409355	**506856**	CR	
1.7 D		D	1699	17DR, 17D	M	Y		09/91 ▸	R1160020	**506087**	CR	
Astra IV (98>)												
1.6 i GNV 16V		G	1598	Z16YNG	M	Y		03/03 ▸	93182038	**506703**	CR	
1.2 i 16V ▸ 19T63670		E	1199	X12XE, Z12XE	M	Y		04/98 ▸	93182029	**506601**	N	
1.4 i 16V		E	1389	X14XE	M	Y			93182038	**506703**	CR	
1.4 i 16V		E	1389	X14XE	M	Y	23 teeth	02/98 ▸	90444079	**506308**	CR	
1.6 i 16V		E	1598	X16XEL	M	Y			93182038	**506703**	CR	

• **New** Nouveau **Nuevo** Novo **Nuovo** Nieuw **Neu** Yeni Новый Nou

		Type Ctr.	cc					OE	Valeo		
VAUXHALL (.../...)											
Astra IV (98>) (.../...)											
1.6 i 20U75999 ▸	E	1598	Z16SE/E2, X16SZR	M	y			9199595	**506785**	CR	
1.6 i Twinport 16V	E	1598	Z16XEP	M	Y		04/03 ▸	24405895	**506837**	N	
1.6 i ▸ 02LC6175	E	1598	X16SZR, Z16SE/E2	M	Y		04/98 ▸	R1160012	**506007**	CR	
1.6 i 16V ▸ 20U75998	E	1598	X16XEL	M	Y	23 teeth	04/98 ▸	90444079	**506308**	CR	
1.8 i 16V	E	1796	Z18XE	M	Y		09/00 ▸	90543935	**506656**	CR	
1.8 i 16V	E	1799	X18XE, X18XE1	M	Y		04/98 ▸	90543935	**506656**	CR	
2.0 i 16V	E	1998	X20XEV	M	Y		04/98 ▸	90444311	**506309**	CR	
2.0 SRi Turbo 16V,2.0 i 16V	E	1998	X20XEV, Z20LET	M	Y		04/98 ▸	24409355	**506856**	CR	
2.2 i 16V 11394430 ▸	E	2198	Z22SE	M	Y		07/00 ▸	93181118	**506839**	N	
2.2 i 16V 11394430 ▸	E	2198	Z22SE	A	Y		07/00 ▸	93181118	**506839**	N	
1.7 DTi 16V	D	1686	Y17DT	M	Y		01/00 ▸	97220278	**506481**	N	
1.7 CDTi,1.7 DTi 16V	D	1686	Z17DTL, Y17DT	M	Y		04/03 ▸	97287175	**506697**	N	
1.7 D Turbo	D	1699	X17DTL	M	Y		04/98 ▸	24409355	**506856**	CR	
1.7 D Turbo	D	1699	X17DTL	M	Y		04/98 ▸	90444311	**506309**	CR	
2.0 Di 16V	D	1995	Y20DTL, X20DTL	M	Y		04/98 ▸	90540478	**506657**	N	
Astra (2004>)											
1.4 Twinport 16V,1.4 i Twinport 16V	E	1364	Z14XEP	M	Y		03/04 ▸	24469102	**506838**	N	
1.6 i 16V,1.6 i Twinport 16V	E	1598	Z16XEP	M	Y		03/04 ▸	24405895	**506837**	N	
1.6 i Twinport 16V	E	1598	Z16XEP	A	Y		01/07 ▸	24405895	**506837**	N	
1.8 i 16V	E	1796	Z18XE	M	Y		03/04 ▸	90543935	**506656**	CR	
1.8 i 16V	E	1796	Z18XER	M	Y		09/05 ▸	24405895	**506837**	N	
1.8 i 16V	E	1796	Z18XER	A	Y		09/05 ▸	24405895	**506837**	N	
2.0 T 16V,2.0 i Turbo 16V	E	1998	Z20LEL, Z20LER	M	Y		03/04 ▸	24409355	**506856**	CR	
1.3 CDTI 16V	D	1248	Z13DTH	M	Y		08/05 ▸	93177340	**506716**	vvv	
1.7 CDTI,1.7 CDTI 16V	D	1686	Z17DTL, Z17DTH	M	Y		03/04 ▸	97287175	**506697**	N	
1.9 CDTI,1.9 CDTI 16V	D	1910	Z19DTH, Z19DTJ, Z19DTL, Z19DT	M	Y		03/04 ▸	93179114	**506590**	SS	
1.9 CDTI	D	1910	Z19DT	A	Y		09/05 ▸	93178713	**506590**	SS	
Calibra											
2.0 i 16V,2.0 i Turbo *JM07//1*	E	1998	C20XE, C20LET	M	Y			90444311	**506309**	CR	
2.0 i 16V,2.0 i Turbo *JM07//1*	E	1998	C20XE, C20LET, X20XEV	M	Y			24409355	**506856**	CR	
2.0 i *JM07D*	E	1998	C20NE	M	Y		06/90 ▸ 06/92	R1160018	**506005**	CR	
2.0 i *JM07D*	E	1998	C20NE	M	Y		07/92 ▸ 08/96	90444123	**506310**	CR	
2.0 i *JM07D*	E	1998	C20NE	A	Y		06/90 ▸ 06/92	R1160018	**506005**	CR	
2.0 i *JM07D*	E	1998	C20NE	A	Y		07/92 ▸ 08/96	90444123	**506310**	CR	
2.0 i 16V *JM07*	E	1998	X20XEV	A	Y		02/94 ▸ 06/97	90444311	**506309**	CR	
2.0 i 16V *JM07*	E	1998	X20XEV	A	Y		02/94 ▸ 06/97	24409355	**506856**	CR	
2.5 i V6,2.5 i V6 24V *JM07*	E	2498	C25XE, X25XE-170	M	Y		08/93 ▸	R1160043	**506527**	N	
2.5 i V6,2.5 i V6 24V *JM07*	E	2498	C25XE, X25XE-170	A	Y		08/93 ▸	R1160043	**506527**	N	
Carlton											
1.8,1.8 i *VF19/E/R, VF35/E/R, VM19 E/R, VM35/E/R* 14270601 ▸	E	1796	18SEH, 18NV, 18SV, E18NVR	M	Y		▸ 03/94	90444123	**506310**	CR	
1.8,1.8 i *VF19/E/R, VF35/E/R, VM19 E/R, VM35/E/R*	E	1796	18SEH, 18SV, E18NVR, 18NV	M	Y		11/86 ▸	R1160018	**506005**	CR	
1.8,1.8 i *VF19/E/R, VF35/E/R, VM19 E/R, VM35/E/R* 14270601 ▸	E	1796	18SV, E18NVR, 18SEH	A	Y		▸ 03/94	90444123	**506310**	CR	
1.8,1.8 i *VF19/E/R, VF35/E/R, VM19 E/R, VM35/E/R* ▸ 14270600	E	1796	18SV, 18SEH, E18NVR	A	Y		11/86 ▸	R1160018	**506005**	CR	
2.0 i *VF35D, VF19/D, VM19/I/T, VM35/I/T* 14608701 ▸	E	1998	20SE, C20NE, C20NEF	M	Y		▸ 05/94	90444123	**506310**	CR	
2.0 i *VF35D, VF19/D, VM19/I/T, VM35/I/T* 14608701 ▸	E	1998	C20NE, 20SE, C20NEF	A	Y		▸ 05/94	90444123	**506310**	CR	
2.0 i *VF35D, VF19/D, VM19/I/T, VM35/I/T* ▸ 14270600	E	1998	C20NE, 20SE, C20NEF	A	Y		11/86 ▸	R1160018	**506005**	CR	
2.0 i *VF35D, VF19/D, VM19/I/T, VM35/I/T* ▸ 14608700	E	1998	20SE, C20NEF, C20NE	M	Y		11/86 ▸	R1160018	**506005**	CR	

• **New** Nouveau **Nuevo** Novo **Nuovo** Nieuw **Neu** Yeni Новый Nou

Valeo

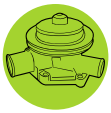

			CC						OE	Valeo		

VAUXHALL (.../...)

Carlton (.../...)

2.3 D,2.3 TD Turbo		D	2260	23YD, 23DTR, 23YDT	M	Y		11/86 ▸ 05/94	90348231	**506084**	V	

Cavalier II (81>88)

1.3		E	1256	13N	M	Y		09/81 ▸ 08/88	90349241	**506006**	CR	
1.3		E	1297	13S	M	Y		09/81 ▸ 08/88	90349241	**506006**	CR	
1.3	*9JF6/8/9, 9JM6/8/9*	E	1297	13S		Y		08/81 ▸ 08/88	R1160013	**506006**	CR	
1.6	14058656 ▸	E	1598	16S	M	Y		▸ 08/88	R1160018	**506005**	CR	
1.6	▸ 14391114	E	1598	16S	M	Y		08/81 ▸	R1160009	**506003**	CR	
1.8 i	*0FJ6/8/9, 0JM6/8/9*	E	1796	C18NE, 18SE, 18E	M	Y		10/82 ▸	R1160009	**506003**	CR	
1.8 i		E	1796	E18NV, 18SE	M	Y		08/86 ▸ 08/88	R1160018	**506005**	CR	
2.0 i		E	1998	20SEH, 20NE	M	Y		09/86 ▸	R1160018	**506005**	CR	
1.6 D	14478631 ▸	D	1598	16D	M	Y		▸ 08/88	R1160020	**506087**	CR	

Cavalier III (88>95)

1.4	*JF19J, JF68J*	E	1389	14NV	M	Y		▸ 08/92	9192793	**506007**	CR	
1.4	*JF19J, JF68J*	E	1389	14NV	M	Y		11/88 ▸	90349240	**506030**	CR	
1.6,1.6 i	*JF19/B/Z, JF68/B/Z, JM19 B/Z, JM68/B/Z*	E	1598	C16NZ, 16SV	M	Y		▸ 10/95	9192793	**506007**	CR	
1.6,1.6 i	*JF19/B/Z, JF68/B/Z, JM19 B/Z, JM68/B/Z*	E	1598	C16NZ, 16SV	M	Y		10/88 ▸	90349240	**506030**	CR	
1.6	*JM19B, JM68B*	E	1598	16SV	A	Y		▸ 08/92	9192793	**506007**	CR	
1.6	*JM19B, JM68B*	E	1598	16SV	A	Y		10/88 ▸	90349240	**506030**	CR	
1.8,1.8 i	*JM19/R/T, JM68/R/T*	E	1796	18SV, C18NZ	M	Y		▸ 10/95	90444123	**506310**	CR	
1.8,1.8 i	*JM19/R/T, JM68/R/T*	E	1796	18SV, C18NZ	M	Y		10/89 ▸	90272361	**506005**	CR	
1.8,1.8 i	*JM19/R/T, JM68/R/T*	E	1796	C18NZ, 18SV	A	Y		▸ 10/95	90444123	**506310**	CR	
1.8,1.8 i	*JM19/R/T, JM68/R/T*	E	1796	18SV, C18NZ	A	Y		10/89 ▸	90272361	**506005**	CR	
2.0 i	*JM19/F/H, JM68/F/H*	E	1998	C20NE, 20SEH, 20NE	M	Y		▸ 10/95	90444123	**506310**	CR	
2.0 i 16V,2.0 i Turbo	*JM68, JM19//I*	E	1998	C20LET, X20XEV, 20XEJ	M	Y		▸ 10/95	24409355	**506856**	CR	
2.0 i 16V,2.0 i Turbo	*JM68, JM19//I*	E	1998	C20LET, X20XEV, 20XEJ	M	Y		▸ 10/95	9192370	**506309**	CR	
2.0 i	*JM19/F/H, JM68/F/H*	E	1998	C20NE, 20NE, 20SEH	M	Y		10/88 ▸	90272361	**506005**	CR	
2.0 i 16V,2.0 i Turbo	*JM19I*	E	1998	20XEJ, C20LET	M	Y		10/89 ▸	90442207	**506080**	CR	
2.0 i	*JM19H, JM68H*	E	1998	20NE, C20NE	A	Y		▸ 05/94	90444123	**506310**	CR	
2.0 i	*JM19H, JM68H*	E	1998	20NE, C20NE	A	Y		10/88 ▸	90272361	**506005**	CR	
2.5 i V6		E	2498	C25XE	M	Y		03/93 ▸ 07/94	90543277	**506527**	N	
1.7 D Turbo		D	1686	17TD	M	Y		09/91 ▸	97110387	**506153**	N	
1.7 D	*JM19L, JM69L*	D	1699	17D, 17DR	M	Y		▸ 10/95	9192370	**506309**	CR	
1.7 D	*JM19L, JM69L*	D	1699	17DR, 17D	M	Y		▸ 10/95	24409355	**506856**	CR	
1.7 D	*JM19L, JM69L*	D	1699	17DR, 17D	M	Y		11/88 ▸	90295078	**506087**	CR	

Corsa I (93>2000)

1.0 i 12V		E	973	X10XE	M	Y		04/97 ▸	93182026	**506601**	N	
1.2 i		E	1196	C12NZ	M	Y		04/93 ▸ 08/98	R1160012	**506007**	CR	
1.2 i 16V		E	1199	X12XE	M	Y		04/97 ▸	93182026	**506601**	N	
1.4 i		E	1389	C14NZ, C14SE	M	Y		04/93 ▸ 08/98	R1160012	**506007**	CR	
1.6 i 16V	▸ 02LD5820	E	1598	C16XE	M	Y	23 teeth	08/93 ▸	90444079	**506308**	CR	
1.5 D,1.5 D Turbo		D	1488	15D, 15TD	M	Y			97135548	**506483**	N	
1.5 D,1.5 D Turbo	S6000002 ▸	D	1488	15TD, 15D, X15DT	M	Y		04/93 ▸	R1160037	**506153**	N	
1.5 D,1.5 D Turbo		D	1488	15TD, 15D	M	Y		04/93 ▸	97110386	**506482**	N	
1.7 D	877698 ▸	D	1699	17D	M	Y		02/96 ▸	R1160036	**506481**	N	
1.7 D	▸ 877697	D	1699	17D	M	Y		02/96 ▸	R1160028	**506153**	N	

Corsa II (2000>2003)

1.0 i 12V	19t75859 ▸	E	973	Z10XE	M	Y		09/00 ▸	93182029	**506601**	N	
1.2 i 16V	▸ 19T75858	E	1199	Z12XE	M	Y		09/00 ▸	93182029	**506601**	N	

• **New** Nouveau **Nuevo** Novo **Nuovo** Nieuw **Neu** Yeni Новый Nou

Type Ctr.	E	cc		M	Y		2 3	OE	Valeo		
VAUXHALL (.../...)											
Corsa II (2000>2003) (.../...)											
1.4 i 16V	E	1389	Z14XE	M	Y		▸ 08/03	93182038	**506703**	CR	
1.4 i 16V	E	1389	Z14XE	M	Y	23 teeth	09/00 ▸	9192797	**506308**	CR	
1.4 i 16V	E	1389	Z14XE	A	Y		▸ 08/03	93182038	**506703**	CR	
1.4 i 16V	E	1389	Z14XE	A	Y	23 teeth	09/00 ▸	9192797	**506308**	CR	
1.8 i 16V	E	1796	Z18XE	M	Y		09/00 ▸ 08/03	90543935	**506656**	CR	
1.7 DTi 16V,1.7 Di 16V 1234215 ▸ 1232414	D	1686	Y17DTL, Y17DT	M	Y		09/00 ▸	97307468	**506697**	N	
Corsa II (2003>)											
1.0 i 12V *AB68C, AC08C, AC68C* 1.0 i Twinport 12V *AE08C, AE68C, AB08/C*	E	998	Z10XEP	M	Y		09/03 ▸	90542606	**506601**	N	
1.2 i 16V *A.68E, AB08E, AB68E* 1.2 i Dualfuel 16V *AC08E, AC68E, AE08E* *AE68E, A.08/E*	E	1199	Z12XE, Z12-LPG	M	Y		09/03 ▸	93182029	**506601**	N	
1.4 i Twinport 16V *AE68G, AS08G, AS68G, AE08G* 02M75254 ▸	E	1364	Z14XEP	M	Y			9199592	**506703**	CR	
1.4 i Twinport 16V 02M75254 ▸	E	1364	Z14XEP	A	Y			9199592	**506703**	CR	
1.8 i 16V *AS08K, AS68K*	E	1796	Z18XE	M	Y		09/03 ▸	90543935	**506656**	CR	
1.3 CDTI 16V *AB08F, AB68F, AC08F* *AC68F, AE08F, AE68F* *AS08F, AS68F, A.08/F*	D	1248	Z13DT	M	Y		09/03 ▸	93177340	**506716**	vvv	
1.7 CDTI 16V *AS08J, AS68J*	D	1686	Z17DTH	M	Y		09/03 ▸	97287175	**506697**	N	
Corsa IV (2006>)											
1.3 CDTi 16V	D	1248	Z13DTH, Z13DTJ	M	Y		07/06 ▸	93189336	**506716**	vvv	
1.7 CDTi 125 16V	D	1686	Z17DTR	M	Y		07/06 ▸	97287175	**506697**	N	
Frontera (91>98)											
2.0 i *52SUD, 55SUD*	E	1998	X20SE, C20NE	M	Y		▸ 09/98	90441123	**506310**	CR	
2.0 i *52SUD* ▸ 146087000	E	1998	C20NE	M	Y		10/91 ▸	90272361	**506005**	CR	
2.2 i *54MWL*	E	2198	X22XE	M	Y		04/95 ▸ 09/98	24409355	**506856**	CR	
2.4 i *53MWL* ▸ sv720102	E	2410	C24NE	M	Y		10/91 ▸	90348231	**506084**	V	
2.3 TD *5JMWL*	D	2260	23DTR	M	Y		10/91 ▸ 04/95	90348231	**506084**	V	
2.5 TDS *5KMWL, 5KSUD*	D	2499	25TDS	M	Y		06/96 ▸ 09/98	91151669	**506692**	N	506589
2.8 TDi *5BMWL, 5BSUD*	D	2771	4JB1-TC	M	Y		04/95 ▸ 09/98	97105012	**506346**	V	
Frontera B (98>)											
2.2 i 16V	E	2198	Y22SE, X22SE	M	Y		10/98 ▸	92065969	**506309**	CR	
2.2 DTi 16V	D	2171	Y22DTH	M	Y		03/01 ▸	90540478	**506657**	N	
2.2 DTi 16V	D	2172	X22DTH	M	Y		10/98 ▸	90540478	**506657**	N	
Meriva											
1.6 i	E	1598	Z16SE/E4	M	y		05/03 ▸	9199595	**506785**	CR	
1.6 i 16V	E	1598	Z16XE	M	Y		05/03 ▸	93182038	**506703**	CR	
1.6 i 16V,1.6 i Turbo 16V	E	1598	Z16XEP, Z16LET	M	Y		08/04 ▸	24405895	**506837**	N	
1.8 i 16V	E	1796	Z18XE	M	Y		05/03 ▸	90543935	**506656**	CR	
1.3 CDTi 16V	D	1248	Y13DT, Z13DTJ, Z13DT	M	Y		08/03 ▸	93177340	**506716**	vvv	
1.7 CDTi 16V,1.7 DTi 16V	D	1686	Y17DT, Z17DTH	M	Y		05/03 ▸	97287175	**506697**	N	
Nova											
1.0 *SF11M, SF19M, SF68M, SF08/M*	E	993	10S	M	Y		04/83 ▸ 03/92	90409912	**506031**	N	
1.2,1.2 i *SF11N, SF19N, SF08/N*	E	1196	12ST, 12NV, C12NZ	M	Y		04/83 ▸ 03/93	R1160012	**506007**	CR	
1.2,1.2 i *SF11N, SF19N, SF68N, SF08N*	E	1196	C12NZ, 12NV, 12ST	M	Y		04/83 ▸ 03/93	90409912	**506031**	N	
1.3	E	1297	13SB	M	Y		07/83 ▸ 09/89	R1160013	**506006**	CR	
1.3	E	1297	13SB	M	Y		07/83 ▸ 09/89	90409912	**506031**	N	
1.4,1.4 i *SF08J, SF68X*	E	1389	14NV, C14NZ	M	Y		▸ 03/93	R1160012	**506007**	CR	
1.4,1.4 i *SF08J, SF68X*	E	1389	14NV, C14NZ	M	Y		10/89 ▸	90349240	**506030**	CR	
1.4,1.4 i *SF19X, SF68X, SF08/J/X*	E	1389	C14NZ, 14NV	M	Y		10/89 ▸ 03/93	90409912	**506031**	N	
1.6 i	E	1598	E16SE	M	Y		▸ 01/92	R1160012	**506007**	CR	

• **New** Nouveau **Nuevo** Novo **Nuovo** Nieuw **Neu** Yeni Новый Nou

Valeo

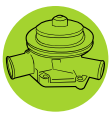

			CC						OE	Valeo		
VAUXHALL (.../...)												
Nova (.../...)												
1.6 i	*SF08P*	E	1598	E16SE	M	Y		05/88 ▸	90349240	**506030**	CR	
1.6 i	*SF08P*	E	1598	E16SE, C16SE	M	Y		05/88 ▸ 03/93	90409912	**506031**	N	
1.5 TD	*SF08D*	D	1488	T4EC1	M	Y		09/89 ▸ 07/90	94124093	**506085**	N	
1.5 D,1.5 TD	*SF08/D/F, SF68/B/F*	D	1488	T4EC1, 4EC1	M	Y		08/90 ▸ 03/93	R1160028	**506153**	N	
Omega												
2.0 i 16V	*F69, M35*	E	1998	X20XEV	M	Y		04/94 ▸	90444311	**506309**	CR	
2.0 i 16V	*F69, M35*	E	1998	X20XEV	M	Y		04/94 ▸	24409355	**506856**	CR	
2.0 i	*F69, M35*	E	1998	X20SE	M	Y		04/94 ▸ 10/95	90444123	**506310**	CR	
2.0 i 16V	*F69, M35*	E	1998	X20XEV	A	Y		04/94 ▸	90444311	**506309**	CR	
2.0 i	*F69, M35*	E	1998	X20SE	A	Y		04/94 ▸ 10/95	90444123	**506310**	CR	
2.0 i 16V	*F69, M35*	E	1998	X20XEV	A	Y		04/94 ▸	24409355	**506856**	CR	
2.2 i 16V		E	2198	Z22XE	M	Y		08/99 ▸	24409355	**506856**	CR	
2.2 i 16V		E	2198	Z22XE	A	Y		08/99 ▸	24409355	**506856**	CR	
2.5 i V6 24V	*F69, M35*	E	2498	X25XE-170	M	Y		04/94 ▸	R1160043	**506527**	N	
2.5 i V6 24V	*F69, M35*	E	2498	X25XE-170	A	Y		04/94 ▸	R1160043	**506527**	N	
2.6 i V6 24V		E	2597	Y26SE	M	Y		09/00 ▸	93170697	**506048**	N	
2.6 i V6 24V		E	2597	Y26SE	A	Y		09/00 ▸	93170697	**506048**	N	
3.0 i,3.0 i V6	*F69, M35*	E	2962	X30XE	M	Y		06/94 ▸	90543277	**506527**	N	
3.0 i,3.0 i V6	*F69, M35*	E	2962	X30XE	A	Y		06/94 ▸	R1160043	**506527**	N	
2.2 DTi 16V		D	2171	Y22DTH	M	Y		09/00 ▸	90540478	**506657**	N	
2.5 TD	*F69, M35*	D	2497	X25TD, U25TD	M	Y		04/94 ▸ 08/01	90541671	**506289**	N	
2.5 TD	*F69, M35*	D	2497	X25TD, U25TD	A	Y		04/94 ▸ 08/01	90541671	**506289**	N	
2.5 TDi 24V		D	2497	Y25DT	M	Y		09/01 ▸ 12/03	93171540	**506663**	vvv	
2.5 TDi 24V		D	2497	Y25DT	A	Y		09/01 ▸ 12/03	93171540	**506663**	vvv	
Senator (87>93)												
2.5 i	*P19*	E	2490	25NE	M	Y		09/87 ▸ 09/90	90348231	**506084**	V	
2.5 i	*P19*	E	2490	25NE	A	Y		09/87 ▸ 09/90	90348231	**506084**	V	
3.0 i ▸ L1999999	*VP19Q*	E	2968	C30NE, 30NE	M	Y		09/87 ▸	90348231	**506084**	V	
3.0 i ▸ L1999999	*VP19Q*	E	2968	C30NE, 30NE	A	Y		09/87 ▸	90348231	**506084**	V	
Signum (2003>2005)												
1.8 i 16V		E	1796	Z18XE	M	Y		06/03 ▸ 09/05	90543935	**506656**	CR	
2.0 i Turbo 16V		E	1998	Z20NET	M	Y		06/03 ▸	93178602	**506839**	N	
2.2 DIG 16V		E	2198	Z22YH	M	Y		06/03 ▸	93178602	**506839**	N	
2.2 DIG 16V		E	2198	Z22YH	A	Y		06/03 ▸	93178602	**506839**	N	
3.2 i V6 24V		E	3175	Z32SE	M	Y		06/03 ▸	93170697	**506048**	N	
3.2 i V6 24V		E	3175	Z32SE	A	Y		06/03 ▸	93170697	**506048**	N	
1.9 CDTI,1.9 CDTi 16V		D	1910	Z19DTH, Z19DT	M	Y		04/04 ▸ 09/05	93179114	**506590**	SS	
1.9 CDTi 16V		D	1910	Z19DTH	A	Y		04/04 ▸ 09/05	93179114	**506590**	SS	
2.0 DTi 16V		D	1995	Y20DTH	M	Y		06/03 ▸	90540478	**506657**	N	
2.2 DTi 16V		D	2171	Y22DTR	M	Y		06/03 ▸	90540478	**506657**	N	
2.2 DTi 16V		D	2171	Y22DTR	A	Y		06/03 ▸	90540478	**506657**	N	
3.0 CDTi V6 24V		D	2958	Y30DT	M	Y		06/03 ▸	97730781	**506728**	G	
3.0 CDTi V6 24V		D	2958	Y30DT	A	Y		06/03 ▸	97730781	**506728**	G	
Signum B (2005>)												
1.8 i 16V		E	1796	Z18XE	M	Y		10/05 ▸	90543935	**506656**	CR	
2.0 i Turbo 16V ▸ 11394429		E	1998	Z20NET	M	Y		10/05 ▸	93181118	**506839**	N	
2.2 DGI 16V 11394430 ▸		E	2198	Z22YH	M	Y		10/05 ▸	93181118	**506839**	N	
2.2 DGI 16V ▸ 11394429		E	2198	Z22YH	A	Y		10/05 ▸	93181118	**506839**	N	
2.8 i V6 Turbo 24V		E	2792	Z28NEL	M	Y		10/05 ▸	12566029	**506866**	N	
2.8 i V6 Turbo 24V		E	2792	Z28NEL	A	Y		10/05 ▸	12566029	**506866**	N	
1.9 CDTI,1.9 CDTI 16V		D	1910	Z19DT, Z19DTL, Z19DTH	M	Y		10/05 ▸	93178713	**506590**	SS	
1.9 CDTI 16V		D	1910	Z19DTH	A	Y		10/05 ▸	93178713	**506590**	SS	
3.0 CDTI V6 24V		D	2958	Z30DT	M	Y		10/05 ▸	97730781	**506728**	G	

• **New** Nouveau **Nuevo** Novo **Nuovo** Nieuw **Neu** Yeni Новый Nou

		Type Ctr.		cc						OE	Valeo	
VAUXHALL (.../...)												
Signum B (2005>) (.../...)												
3.0 CDTI V6 24V		D	2958	Z30DT	A	Y		10/05 ▸		97730781	**506728**	G
Sintra												
3.0 i V6	U068	E	2962	X30XE	A	Y		03/96 ▸ 12/99		R1160043	**506527**	N
Tigra												
1.4 i 16V	F07	E	1389	X14XE	M	Y	23 teeth	11/94 ▸		90444079	**506308**	CR
1.4 i 16V	F07	E	1389	X14XE	A	Y	23 teeth	02/95 ▸		90444079	**506308**	CR
1.6 i 16V	F07	E	1598	X16XE	M	Y	23 teeth	11/94 ▸		90444079	**506308**	CR
Tigra Twintop												
1.8 i 16V		E	1796	Z18XE	M	Y		07/04 ▸		90543935	**506656**	CR
1.3 CDTi Twinport 16V		D	1248	Z13DT	M	Y		07/04 ▸		93177340	**506716**	vvv
Vectra (95>2002)												
1.6 i 16V 20U75999 ▸	JF19, JF68	E	1598	X16XEL	M	Y		▸ 03/02		93182038	**506703**	CR
1.6 i	JF19, JF68	E	1598	X16SZR	M	Y		10/95 ▸		R1160012	**506007**	CR
1.6 i 16V 20U75999 ▸	JF19, JF68	E	1598	X16XEL	A	Y		▸ 03/02		93182038	**506703**	CR
1.6 i 16V ▸ 20U75998	JF19, JF68	E	1598	X16XEL	M	Y	23 teeth	10/95 ▸		90444079	**506308**	CR
1.6 i 16V ▸ 20U75998	JF19, JF68	E	1598	X16XEL	A	Y	23 teeth	10/95 ▸		90444079	**506308**	CR
1.8 i 16V	JF35, JF68	E	1796	Z18XE	M	Y		10/95 ▸ 03/02		90543935	**506656**	CR
1.8 i 16V	JF35, JF68, JF19	E	1796	Z18XE	A	Y		09/00 ▸ 03/02		90543935	**506656**	CR
1.8 i 16V	JF35, JF68, JF19	E	1799	X18XE	M	Y		10/95 ▸		90444311	**506309**	CR
1.8 i 16V	JF35, JF68, JF19	E	1799	X18XE	M	Y		10/95 ▸		24409355	**506856**	CR
1.8 i 16V	JF35, JF68, JF19	E	1799	X18XE	A	Y		10/95 ▸		90444311	**506309**	CR
1.8 i 16V	JF35, JF68, JF19	E	1799	X18XE	A	Y		10/95 ▸		24409355	**506856**	CR
2.0 i 16V	JF35, JF68, JF19	E	1998	X20XEV	M	Y		10/95 ▸		24409355	**506856**	CR
2.0 i 16V	JF35, JF68, JF19	E	1998	X20XEV	M	Y		10/95 ▸		90444311	**506309**	CR
2.0 i 16V	JF35, JF68, JF19	E	1998	X20XEV	A	Y		10/95 ▸		90444311	**506309**	CR
2.0 i 16V	JF35, JF68, JF19	E	1998	X20XEV	A	Y		10/95 ▸		24409355	**506856**	CR
2.2 i 16V	JF	E	2198	Z22SE	M	Y		09/00 ▸ 03/02		93172718	**506839**	N
2.2 i 16V	JF	E	2198	Z22SE	A	Y		09/00 ▸ 03/02		93172718	**506839**	N
2.5 i V6 24V	JF35, JF68, JF19	E	2498	X25XE-170, X25XE-195	M	Y		10/95 ▸		R1160043	**506527**	N
2.5 i V6 24V	JF35, JF68, JF19	E	2498	X25XE-170	A	Y		10/95 ▸		R1160043	**506527**	N
2.6 i V6 24V	JF35	E	2597	Y26SE	M	Y		09/00 ▸ 03/02		93170697	**506048**	N
2.6 i V6 24V	JF35	E	2597	Y26SE	A	Y		09/00 ▸ 03/02		93170697	**506048**	N
1.7 TD	JF19, JF68	D	1686	X17DT	M	Y		10/95 ▸ 07/96		R1160036	**506481**	N
2.0 DTI 16V		D	1995	X20DTH	M	Y		09/97 ▸ 03/99		90540478	**506657**	N
2.2 DTI 16V		D	2171	Y22DTR	M	Y		09/00 ▸ 03/02		90540478	**506657**	N
Vectra (2002>2005)												
1.8 i LPG 16V		G	1796	Z18XE-GPL	M	Y		04/02 ▸		90543935	**506656**	CR
1.8 i 16V		E	1796	Z18XE, Z18XEL	M	Y		04/02 ▸		90543935	**506656**	CR
2.0 i Turbo 16V 11394430 ▸		E	1998	Z20NET	M	Y		05/03 ▸		93181118	**506839**	N
2.2 DGI 16V,2.2 i 16V ▸ 11394429		E	2198	Z22SE, Z22YH	M	Y		04/02 ▸		93181118	**506839**	N
2.2 i 16V ▸ 11394429		E	2198	Z22SE, Z22YH	A	Y		04/02 ▸		93181118	**506839**	N
3.2 i V6 24V		E	3175	Z32SE	M	Y		04/02 ▸		93170697	**506048**	N
3.2 i V6 24V		E	3175	Z32SE	A	Y		04/02 ▸		93170697	**506048**	N
1.9 CDTI,1.9 CDTI 16V		D	1910	Z19DTH, Z19DT	M	Y		04/04 ▸		93179114	**506590**	SS
1.9 CDTI 16V		D	1910	Z19DTH	A	Y		04/04 ▸		93179114	**506590**	SS
2.0 DTI 16V		D	1995	Y20DTH	M	Y		04/02 ▸		90540478	**506657**	N
2.2 DTI 16V		D	2171	Y22DTR	M	Y		04/02 ▸		90540478	**506657**	N
2.2 DTI 16V		D	2171	Y22DTR	A	Y		04/02 ▸		90540478	**506657**	N
3.0 CDTi V6 24V		D	2958	Y30DT	M	Y		07/03 ▸		97730781	**506728**	G
3.0 CDTi V6 24V		D	2958	Y30DT	A	Y		07/03 ▸		97730781	**506728**	G
Vectra (2005>)												
1.6 i 16V		E	1598	Z16XE	M	Y		10/05 ▸		93182038	**506703**	CR

• **New** Nouveau **Nuevo** Novo **Nuovo** Nieuw **Neu** Yeni Новый Nou

Valeo

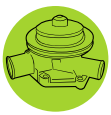

			CC						OE	Valeo		
VAUXHALL (.../...)												
Vectra (2005>) (.../...)												
1.8 i 16V		E	1796	Z18XE	M	Y		10/05 ▸	24405895	**506837**	N	
2.0 i Turbo 16V		E	1998	Z20NET	M	Y		10/05 ▸	93181118	**506839**	N	
▸ 11394429												
2.2 DGI 16V		E	2198	Z22YH	M	Y		10/05 ▸	93181118	**506839**	N	
11394430 ▸												
2.2 DGI 16V		E	2198	Z22YH	A	Y		10/05 ▸	93181118	**506839**	N	
2.8 i V6 Turbo 24V		E	2792	Z28NEL	M	Y		10/05 ▸	12566029	**506866**	N	
2.8 i V6 Turbo 24V		E	2792	Z28NEL	A	Y		10/05 ▸	12566029	**506866**	N	
1.9 CDTI,1.9 CDTI 16V		D	1910	Z19DTH, Z19DTL	M	Y		10/05 ▸	93179114	**506590**	SS	
1.9 CDTI 16V		D	1910	Z19DTH	A	Y		10/05 ▸	93179114	**506590**	SS	
VX 220												
2.0 i Turbo 16V		E	1998	Z20LET, Z20LER	M	Y		12/02 ▸	24409355	**506856**	CR	
2.2 i 16V	*ER97P*	E	2198	Z22SE	M	Y		08/00 ▸	93181118	**506839**	N	
11394430 ▸												
Zafira (99>2003)												
1.6 i 16V	*W0L0T*	E	1598	X16XEL	M	Y	23 teeth	05/99 ▸	90444079	**506308**	CR	
1.8 i 16V	*W0L0T*	E	1796	Z18XE	M	Y		09/00 ▸ 06/03	90543935	**506656**	CR	
1.8 i 16V	*W0L0T*	E	1799	X18XE1	M	Y		05/99 ▸	90543935	**506656**	CR	
1.8 i 16V	*W0L0T*	E	1799	X18XE1	A	Y		05/99 ▸	90543935	**506656**	CR	
2.0 i Turbo 16V	*W0L0T*	E	1998	Z20LET	M	Y		10/01 ▸ 06/03	24409355	**506856**	CR	
2.2 i 16V	*W0L0T*	E	2198	Z22SE	M	Y		08/00 ▸	93181118	**506839**	N	
11394430 ▸												
Zafira (2003>)												
1.6 GNV 16V	*QG75I, QM75I*	G	1598	Z16YNG	M	Y		07/03 ▸	93182038	**506703**	CR	
1.6 i 16V	*QG75I, QM75I*	E	1598	Z16XE	M	Y	23 teeth	07/03 ▸	9192797	**506308**	CR	
1.6 i 16V	*QG75I, QM75I*	E	1598	Z16XE	M	Y		07/03 ▸	93182038	**506703**	CR	
1.8 i 16V	*QD75K, QX75K*	E	1796	Z18XE	M	Y		07/03 ▸	90543935	**506656**	CR	
1.8 i 16V	*QX75K*	E	1796	Z18XE	A	Y		07/03 ▸	90543935	**506656**	CR	
2.2 i 16V	*QD75P*	E	2198	Z22SE	M	Y		07/03 ▸	93178602	**506839**	N	
2.2 i 16V	*QD75P*	E	2198	Z22SE	A	Y		07/03 ▸	93178602	**506839**	N	
2.2 DTI 16V	*QD75P, QX75P*	D	2171	Y22DTR	M	Y		07/03 ▸	90540478	**506657**	N	
Zafira II (2005>)												
1.6 i Twinport 16V		E	1598	Z16XEP	M	Y		07/05 ▸	24405895	**506837**	N	
1.8 i 16V		E	1796	Z18XER	M	Y		09/05 ▸	24405895	**506837**	N	
2.0 i Turbo 16V		E	1998	Z20LER, Z20LEH	M	Y		07/05 ▸	24409355	**506856**	CR	
2.2 i 16V		E	2198	Z22YH	M	Y		07/05 ▸	93181118	**506839**	N	
2.2 i 16V		E	2198	Z22YH	A	Y		07/05 ▸	93181118	**506839**	N	
1.9 CDTI,1.9 CDTI 16V		D	1910	Z19DTH, Z19DT, Z19DTL	M	Y		07/05 ▸	93179114	**506590**	SS	
1.9 CDTI,1.9 CDTI 16V		D	1910	Z19DT, Z19DTH	A	Y		07/05 ▸	93179114	**506590**	SS	
VAUXHALL												
Arena												
1.9 D		D	1870	F8Q.6.06	M	Y		01/98 ▸	91160212	**506019**	N	
2.5 D	*TB1G, THBG*	D	2499	S8U.7.82, S8U.7.58	M	Y		03/97 ▸	9112088	**506106**	N	
Astramax												
1.4,1.4 i		E	1389	14NV, C14NZ, X14NZ, C14SE	M	Y		10/91 ▸ 03/98	9192793	**506007**	CR	
1.6 i		E	1598	16LZ2	M	Y		10/91 ▸ 03/98	90444123	**506310**	CR	
1.6 i		E	1598	X16SZ, C16NZ	M	Y		10/91 ▸ 03/98	9192793	**506007**	CR	
1.8 i 16V		E	1799	C18XEL	M	Y		08/94 ▸ 03/98	24409355	**506856**	CR	
1.7 D,1.7 D Turbo		D	1699	17DR, X17DTL	M	Y		▸ 03/98	24409355	**506856**	CR	
14363652 ▸												
1.7 D		D	1699	17DR	M	Y		10/91 ▸	90295078	**506087**	CR	
▸ 14363651												
Brava												
2.5 D,2.5 TD	*TFR54, TFS54*	D	2499	4JA1, 25D	M	Y		10/88 ▸ 06/96	97105012	**506346**	V	

• **New** Nouveau **Nuevo** Novo **Nuovo** Nieuw **Neu** Yeni Новый Nou

Type Ctr.	cc						OE	Valeo		
VAUXHALL (.../...)										
Combo (93>2001)										
1.4 i	E	1389	C14NZ	M	Y		10/93 ▸ 09/01	R1160012	**506007**	CR
1.7 D	D	1686	X17D	M	Y		▸ 09/01	97114682	**506481**	N
877698 ▸										
Combo (2002>2004)										
1.6 i GPL	G	1598	Z16SE	M	y		10/01 ▸ 06/04	9199595	**506785**	CR
1.6 i	E	1598	Z16SE/E4	M	y		10/01 ▸ 06/04	9199595	**506785**	CR
1.3 CDTi 16V	D	1248	Z13DT	M	Y		07/04 ▸	93177340	**506716**	vvv
1.7 CDTi 16V,1.7 DTi 16V,1.7 Di 16V	D	1686	Z17DTH, Y17DT, Y17DTL	M	Y		10/01 ▸	97307468	**506697**	N
Combo (2011>)										
1.4 CNG Turbo 16V	F	1364	A14FC	M	N		12/11 ▸	55221397	**506967**	CR
1.4 i 95 16V	E	1364	A14FP	M	N		12/11 ▸	55221397	**506967**	CR
1.3 CDTI 90 16V	D	1248	A13FD	M	Y		12/11 ▸	93195466	●**506983**	V
Movano										
1.9 CDTi,1.9 Dti *FD, JD*	D	1870	F9Q.7.72	M	Y		08/00 ▸	91159773	●**506698**	SS
1.9 Dti *FD, JD*	D	1870	F9Q.7.70	M	Y		08/00 ▸ 07/02	91160212	**506019**	N
2.2 CDTi 16V,2.2 Dti 16V *FD, JD, UD, ED*	D	2188	G9T.7.50, G9T.7.22, G9T.7.20	M	Y		09/00 ▸	9201450	**506709**	N
2.5 D *FD, JD, UD, ED*	D	2445	S8U.7.72	M	y		10/98 ▸ 10/01	9161593	**506783**	N
2.5 CDTi 16V,2.5 Dti 16V *FD, JD, UD, ED*	D	2464	G9U.7.20, G9U.7.54	M	Y		10/01 ▸	9109595	**506709**	N
2.5 CDTi 16V *FD, JD, UD, ED*	D	2464	G9U.7.20, G9U.7.54	A	Y		10/03 ▸	9109595	**506709**	N
2.8 Dti *FD, JD, UD, ED*	D	2800	S9W.7.02, S9W.7.00	M	y		10/98 ▸ 10/01	9161594	**506784**	N
Vivaro (2001>2006)										
2.0 i 16V *1F05M, 1G05M*	E	1998	F4R.7.20	M	Y		08/01 ▸	91159773	●**506698**	SS
1.9 DI,1.9 DTI *1F05L, 1G05L*	D	1870	F9Q.7.60, F9Q.7.62	M	Y		08/01 ▸	91159773	●**506698**	SS
2.5 DTI *1F06S, 1G03S, 1G05S, 1F05 S*	D	2464	G9U.7.30	M	Y		05/03 ▸	9109595	**506709**	N
Vivaro (2006>)										
2.0 CDTi 16V	D	1995	M9R.7.80	M	Y		07/06 ▸	93161595	**506902**	N
2.5 CDTi 16V	D	2464	G9U.6.30	M	Y		07/06 ▸	9109595	**506709**	N
VOLKSWAGEN										
Bora										
1.4 i 16V *1J2/0/1/2, 1J6/0/1/2*	E	1390	AXP, AHW, BCA, AKQ, APE	M	Y		05/01 ▸	036121005S	**506576**	CR
1J-2-000 001 ▸ 1J-2-700 000										
1.6 FSI 16V,1.6 i 16V *1J2/0/1/2/3/5, 1J6/0/1/2*	E	1595	ATN, AUS, AZD, BAD, BCB	M	Y		08/99 ▸	036121008G	**506706**	CR
1.6 i 16V 16V *3/5*										
1.8 i 20V,1.8 i Turbo 20V *1J2/0/1/2/3/5, 1J6/0/1/2 3/5*	E	1781	AUQ, AGN, AUM, AGU	M	Y	23 teeth	09/00 ▸	06A121011T	**506532**	CR
1.8 i 20V,1.8 i Turbo 20V *1J2/0/1/2/3/5, 1J6/0/1/2 3/5*	E	1781	AGU, AUM, AGN, ARX	A	Y	23 teeth	05/01 ▸	06A121011T	**506532**	CR
2.0 i *1J2/0/1/2/3/5, 1J6/0/1/2/3/5*	E	1984	APK, AQY, AZJ, AZH	A	Y	23 teeth	09/98 ▸	06A121011T	**506532**	CR
2.0 i *1J2/0/1/2/3/5, 1J6/0/1/2/3/5*	E	1984	AZJ, AQY, AZH, APK	M	Y	23 teeth	09/98 ▸	06A121011T	**506532**	CR
1J-2-000 001 ▸ 1J-1-900 000										
2.3 i V5 20V *1J2/0/1/2/3/5, 1J6/0/1/2*	E	2324	AGZ, AQN	M	N		09/98 ▸	071121005	**506587**	N
▸ 1J-2-500 000 *3/5*										
2.3 i V5 20V *1J2/0/1/2/3/5, 1J6/0/1/2*	E	2324	AQN, AGZ	A	N		09/98 ▸	071121005	**506587**	N
▸ 1J-2-500 000 *3/5*										
2.8 i VR6 24V *1J2/3/6, 1J6/3/6*	E	2792	BDE	M	Y		01/02 ▸	022121011	**506798**	N
1J-2-500 001 ▸										
2.8 i VR6 24V *1J2/3/5/6, 1J6/3/5/6*	E	2792	AQP, AUE, BDE	M	Y		05/99 ▸	021121004X	**506484**	N
2.8 i VR6 24V *1J2/3/6, 1J6/3/6*	E	2792	BDE	A	Y		05/01 ▸ 05/03	022121011	**506798**	N
1J-2-500 001 ▸										
2.8 i VR6 24V *1J2/3/5/6, 1J6/3/5*	E	2792	AQP, AUE	A	Y		05/99 ▸ 04/01	021121004X	**506484**	N
1.9 TDi *1J2/2/3, 1J6/2/3*	D	1896	ARL	M	Y		09/00 ▸	038121011H	**506699**	CR
1J-3-000 001 ▸										
1.9 TDi *1J2/0/1/2/3, 1J6/0/1/2/3*	D	1896	AXR, ASZ, ATD	M	Y		05/02 ▸	038121011G	**506872**	CR
1J-3-000 001 ▸										

• **New** Nouveau **Nuevo** Novo **Nuovo** Nieuw **Neu** Yeni Новый Nou

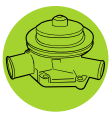

VOLKSWAGEN (.../...)

Bora (.../...)

1.9 SDi,1.9 TDi	*1J2/0/1/2/3/5, 1J6/0/1/2 3/5*	D	1896	AGR, ALH, AHF, ASV, AGP, AQM	M	Y		09/98 ▸ 05/05	038121011A	**506533**	CR	
1.9 TDi	*1J2/0/1/2/3, 1J6/0/1/2/3*	D	1896	ATD, ASZ	A	Y		05/02 ▸	038121011G	**506872**	CR	
1J-3-000 001 ▸												
1.9 TDi	*1J2/0/1/2/3/5, 1J6/0/1/2 3/5*	D	1896	AGR, AHF, ALH	A	Y		09/98 ▸ 05/03	038121011A	**506533**	CR	
1.9 TDi	*1J2/0/1/2/3/5, 1J6/0/1/2 3/5*	D	1896	AXR, AJM, AUY, ASZ, ATD	M	Y		11/98 ▸	038121011CX	**506871**	CR	
▸ 1J-2-700 000												
1.9 TDi	*1J2/2/3, 1J6/2/3*	D	1896	ARL	A	Y		09/00 ▸	038121011H	**506699**	CR	
▸ 1J-2-700 000												
1.9 TDi	*1J2/0/1/2/3/5, 1J6/0/1/2 3/5*	D	1896	ASZ, ATD, AJM, AUY	A	Y		02/99 ▸	038121011CX	**506871**	CR	
▸ 1J-2-700 000												

Corrado

1.8 i 16V,1.8 i G60	*5090*	E	1781	PG, KR	M	Y		09/88 ▸ 07/93	037121010C	**506667**	N	506666
1.8 i 16V,1.8 i G60	*5090*	E	1781	PG, KR	A	Y		04/89 ▸ 07/92	037121010C	**506667**	N	506666
2.0 i,2.0 i 16V	*5090*	E	1984	9A, 2E, ADY	M	Y		08/91 ▸ 07/95	037121010C	**506667**	N	506666
2.0 i,2.0 i 16V	*5090*	E	1984	2E, 9A, ADY	A	Y		08/91 ▸ 07/95	037121010C	**506667**	N	506666
2.9 E VR6	*5090*	E	2861	ABV	M	Y		08/91 ▸ 07/95	021121004X	**506484**	N	
2.9 E VR6	*5090*	E	2861	ABV	A	Y		08/91 ▸ 07/95	021121004X	**506484**	N	

Derby (77>81)

0.9	*865/0/1/2, 866/0/1/2*	E	895	HA	M	Y		01/77 ▸ 09/81	052121005AX	**506013**	CR	
1.1	*865/0/1/2, 866/0/1/2*	E	1093	HB	M	Y		01/77 ▸ 09/81	052121005AX	**506013**	CR	
1.1	*865*	E	1093	HD		Y		01/77 ▸ 07/78	052121005AX	**506013**	CR	
1.3	*865/0/1/2, 866/1/2*	E	1272	HH, HJ	M	Y		01/77 ▸ 09/81	052121005AX	**506013**	CR	

Derby (81>84)

1.05	*873/0/1/2*	E	1043	GL	M	Y		10/81 ▸ 10/84	052121005AV	**506013**	CR	
1.1	*873/0/1/2/A/B/C*	E	1093	HB	M	Y		10/81 ▸ 07/83	052121005AV	**506013**	CR	
1.3	*873/0/1/2*	E	1272	HH, HK, GK	M	Y		10/81 ▸ 10/84	052121005AV	**506013**	CR	

Eos

1.4 FSi 16V,1.4 TSI 16V	*1F73, 1F84*	E	1390	CAXA	M	Y		11/07 ▸	03C121008E	•**506950**	N	
1.6 FSi 16V	*1F73*	E	1598	BLF	M	Y		05/06 ▸	03C121005S	•**506867**	N	
2.0 FSi 16V	*1F73*	E	1984	BVY	M	Y		05/06 ▸ 05/08	03C121008B	•**506950**	N	
2.0 TFSi 16V	*1F73*	E	1984	BWA	M	Y	23 teeth	05/06 ▸	06F121011X	**506876**	CR	
2.0 TFSi 16V	*1F73*	E	1984	BWA	A	Y	23 teeth	05/06 ▸	06F121011X	**506876**	CR	
2.0 FSi 16V	*1F73*	E	1984	BVY,BVZ	M	Y		05/06 ▸	06B121011MX	**506790**	CR	
3.2 i V6 24V	*1F73*	E	3189	BUB	A	Y		05/06 ▸	022121011	**506798**	N	
2.0 TDi	*1F73*	D	1968	BMM	M	Y		05/06 ▸	038121011J	**506872**	CR	
2.0 TDi	*1F73*	D	1968	BMM	A	Y		05/06 ▸	038121011J	**506872**	CR	

Fox

1.2 i	*5Z11*	E	1198	BMD	M	N		11/04 ▸	03D121005	**506855**	N	
1.4 i	*5Z1/1/4*	E	1390	BKR	M	Y		11/04 ▸	030121008D	**506385**	CR	
1.4 TDi	*5Z1/1/4*	D	1422	BNM	M	Y		11/04 ▸	045121011F	**506700**	CR	

Golf I (74>83)

1.1	*171/0/1/2, 172/0/1/2, 173/0/1/2 174/0/1/2*	E	1093	FA, FJ, GG	M	Y		04/74 ▸ 12/83	052121005AX	**506013**	CR	
1.3	*171/0/1/2, 172/0/1/2, 173/0/1/2 174/0/1/2*	E	1272	GS, GF	M	Y		08/79 ▸ 12/83	052121005AX	**506013**	CR	
1.5	*171/0/1/2, 172/0/1/2, 173/0/1/2*	E	1457	JB, GH	M	Y		08/77 ▸ 12/83	037121010C	**506667**	N	506666
1C-630 000 ▸	*174/0/1/2*											
1.5	*171/0/1/2, 172/0/1/2, 173/0/1/2*	E	1457	JB, GH	A	Y		08/78 ▸ 12/83	037121010C	**506667**	N	506666
1C-630 000 ▸	*174/0/1/2*											
1.5	*171/0/1/2, 172/0/1/2, 173/0/1/2*	E	1457	JB, GH, EH	M	Y		08/77 ▸ 12/83	055121010X	**506227**	N	506066
▸ 1C-630 000	*174/0/1/2*											
1.5	*171/0/1/2, 172/0/1/2, 173/0/1/2*	E	1457	GH, JB, EH	A	Y		08/77 ▸ 12/83	055121010X	**506227**	N	506066
▸ 1C-630 000	*174/0/1/2*											
1.5	*171/0/1, 172/0/1, 173/0/1, 174/0/1*	E	1471	FK, FH	M	Y		02/74 ▸ 12/75	055121010X	**506227**	N	506066
1.5	*171/0/1, 172/0/1, 173/0/1, 174/0/1*	E	1471	FK, FH	A	Y		08/74 ▸ 12/75	055121010X	**506227**	N	506066

• **New** Nouveau **Nuevo** Novo **Nuovo** Nieuw **Neu** Yeni Новый Nou

VOLKSWAGEN (.../...)

Golf I (74>83) (.../...)

1.6 1.C630 001 ▸	171/0/1/2/3, 172/0/1/2/3, 173/0/1/2 174/0/1/2	E	1588	EG, EM	M	Y		04/82 ▸ 12/83	037121010C	**506667**	N	506666
1.6 1C-630 001 ▸	171/0/1/2, 172/0/1/2, 173/0/1/2 174/0/1/2	E	1588	EM	A	Y		04/82 ▸ 12/83	037121010C	**506667**	N	506666
1.6 ▸ 1C-630 000	171/0/1/2, 172/0/1/2, 173/0/1/2 174/0/1/2	E	1588	FP, FT, FV, EJ, FN, EM	A	Y		08/75 ▸ 04/82	055121010X	**506227**	N	506066
1.6 ▸ 1C-630 000	171/0/1/2/3, 172/0/1/2/3, 173/0/1/2 174/0/1/2	E	1588	EM, FP, FN, EJ, FV, FT, EG	M	Y		08/75 ▸ 04/82	055121010X	**506227**	N	506066
1.7 i 1C-630 000 ▸	172/0/1/2, 174/0/1/2	E	1716	EN	M	Y		08/80 ▸ 07/83	037121010C	**506667**	N	506666
1.7 i	172/0/1/2, 174/0/1/2	E	1716	EN	A	Y		08/80 ▸ 12/83	037121010C	**506667**	N	506666
1.7 i ▸ 1C-630 000	172/0/1/2, 174/0/1/2	E	1716	EN	M	Y		08/80 ▸ 04/82	055121010X	**506227**	N	506066
1.7 i ▸ 1C-630 000	172/0/1/2, 174/0/1/2	E	1716	EN	A	Y		08/80 ▸ 04/82	055121010X	**506227**	N	506066
1.8	1723, 1733, 171/3	E	1781	DX, JJ	M	Y		08/82 ▸ 12/83	037121010C	**506667**	N	506666
1.5 D	171/0/1/2, 172/0/1/2, 173/0/1/2 174/0/1/2	D	1471	CK	M	Y		08/76 ▸ 07/80	055121010X	**506227**	N	506066
1.5 D	171/0/1/2, 172/0/1/2, 173/0/1/2 174/0/1/2	D	1471	CK	A	Y		08/77 ▸ 07/78	055121010X	**506227**	N	506066
1.6 D,1.6 TD 1C-630 001 ▸	171/0/1/2/T, 172/0/1/2 173/0/1/2/T, 174/0/1/2/A	D	1588	CY, CR, JK	M	Y		03/82 ▸ 12/84	037121010C	**506667**	N	506666
1.6 D 1C-630 001 ▸	171/0/1/2, 172/0/1/2, 173/0/1/2 174/0/1/2/A	D	1588	CR, JK	A	Y		04/82 ▸ 12/83	037121010C	**506667**	N	506666
1.6 D ▸ 1C-630 000	171/0/1/2, 172/0/1/2, 173/0/1/2 174/0/1/2/A	D	1588	CR	M	Y		08/80 ▸ 07/82	055121010X	**506227**	N	506066
1.6 D ▸ 1C-630 000	171/0/1/2, 172/0/1/2, 173/0/1/2 174/0/1/2/A	D	1588	CR	A	Y		08/81 ▸ 04/82	055121010X	**506227**	N	506066

Golf I Cabriolet (79>93)

1.1	1542, 1552	E	1093	FA, GG	M	Y		01/79 ▸ 07/83	052121005AX	**506013**	CR	
1.3 i	1552	E	1272	HK	M	Y		08/83 ▸ 07/86	052121005AX	**506013**	CR	
1.5	1542, 1552	E	1457	JB, GH	M	Y		01/79 ▸ 08/83	037121010C	**506667**	N	506666
1.5	1542, 1552	E	1457	GH, JB	A	Y		01/79 ▸ 08/83	037121010C	**506667**	N	506666
1.5 ▸ ..C-630 000	1542, 1552	E	1457	JB, EH, GH	M	Y		01/79 ▸ 08/83	055121010X	**506227**	N	506066
1.5 ▸ ..C-630 000	1542, 1552	E	1457	JB, GH, EH	A	Y		01/79 ▸ 08/83	055121010X	**506227**	N	506066
1.6,1.6 i ▸ ..C-630 000	1542, 1552	E	1588	FV, FN, EM, EG, EJ	M	Y		01/79 ▸ 07/82	055121010X	**506227**	N	506066
1.6,1.6 i ▸ ..C-630 000	1542, 1552	E	1588	FV, EM, EJ, FN	A	Y		01/79 ▸ 07/82	055121010X	**506227**	N	506066
1.6	154/2/4, 155/2/4	E	1595	EW, HN	M	Y		08/83 ▸	037121010C	**506667**	N	506666
1.6	1552	E	1595	EW	M	Y		08/83 ▸ 07/86	052121005AX	**506013**	CR	
1.6	154/2/4, 155/2/4	E	1595	EW, HN	A	Y		08/83 ▸	037121010C	**506667**	N	506666
1.7 i	1552	E	1716	EN	M	Y		08/80 ▸ 07/81	037121010C	**506667**	N	506666
1.7 i	1552	E	1716	EN	M	Y		08/80 ▸ 07/81	055121010X	**506227**	N	506066
1.7 i	1552	E	1716	EN	A	Y		08/80 ▸ 07/81	037121010C	**506667**	N	506666
1.7 i	1552	E	1716	EN	A	Y		08/80 ▸ 07/81	055121010X	**506227**	N	506066
1.8,1.8 i	154/2/4/A, 155/2/4/A/J/K	E	1781	KT, DX, EX, JH, 2H, JJ	M	Y		08/82 ▸ 07/93	037121010C	**506667**	N	506666
1.8 i	1554	E	1781	KT	M	Y		02/87 ▸ 12/87	052121004	**506013**	CR	
1.8,1.8 i	154/2/4, 155/2/4/J/K	E	1781	JH, EX, 2H	A	Y		08/83 ▸ 07/93	037121010C	**506667**	N	506666

Golf II (83>91)

1.05	1920, 191/0/1/2, 1940, 193/0/1/2 1G1/1/2/3	E	1043	HZ, GN	M	Y		08/83 ▸ 10/91	052121005AX	**506013**	CR	
1.3	1920, 191/0/1/2/H/J, 193/0/1/2/G/H J, 194/0/1, 1G1/0/1/2/3	E	1272	MH, NU, 2G, GT, NZ, HK	M	Y		08/83 ▸ 07/92	052121005AX	**506013**	CR	
1.3	1G12	E	1272	2G	M	Y		01/89 ▸ 10/91	026121010E	**506667**	N	506666
1.6	1920, 191/0/1/2/H/J, 193/0/1/2/G/H J, 194/1/2, 1G1/1/2/3	E	1595	HM, EZA, PN, RF, EZ, ABX, ABN	M	Y		08/83 ▸ 07/92	037121010C	**506667**	N	506666
1.6	1920, 191/0/1/2, 193/0/1/2, 194/0/1 2, 1G1/1/2/3	E	1595	EZA, EZ, RF, HM, PN	A	Y		08/83 ▸ 07/92	037121010C	**506667**	N	506666

• **New** Nouveau **Nuevo** Novo **Nuovo** Nieuw **Neu** Yeni Новый Nou

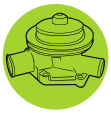

		Type Ctr.		cc					OE	Valeo		
VOLKSWAGEN (.../...)												
Golf II (83>91) (.../...)												
1.8 G60	*1G17, 1G47*	E	1763	1H	M	Y		08/88 ▸ 12/89	037121010C	**506667**	N	506666
1.8,1.8 G60,1.8 i 1.8 i 16V	*168Z, 167/5, 191/0/1/2/3 G/H/J/N/S/T/U/V/W/Z, 192 0/1/2/3/T/U/V/Z, 193/0/1 2/3/7/G/H/J/K/N/P/S/T/U/V W/Z, 194/0/1/2/3/7/T/N/Z 1G47, 1G1/1/2/3/5/J*	E	1781	KR, PL, GU, PG, GX, RP, RH GZ, EV, 1P, HV, PF, RV, PB HT, RD	M	Y		08/83 ▸ 07/97	037121010C	**506667**	N	506666
1.8,1.8 G60	*1G47, 1G1/5/7*	E	1781	PG	M	Y		08/88 ▸ 07/91	038121011A	**506533**	CR	
1.8,1.8 i	*191/0/1/2/G/H/J, 192/0/1 2, 193/0/1/2/7/G/H/J/K/T 194/0/1/2/7/G, 1G1/1/2/3 5*	E	1781	HV, RP, GU, GX, RH, RV	A	Y		08/83 ▸ 10/91	037121010C	**506667**	N	506666
1.6 D,1.6 TD	*191/0/1/2/T/V, 192/0/1/2 193/0/1/2/7/T, 194/0/1/2 1G1/1/2/3/5*	D	1588	JR, RA, MF, SB, JP, 1V, ME	M	Y		08/83 ▸ 07/92	037121010C	**506667**	N	506666
1.6 D	*1920, 191/0/1/2, 193/0/1/2, 194/0/2 1G1/1/2/3*	D	1588	JP	A	Y		08/83 ▸ 10/91	037121010C	**506667**	N	506666
Golf II Cabriolet (93>98)												
1.6 i	*1E7/3/5/E*	E	1598	AEK, AFT, AKS	M	Y		07/94 ▸ 02/98	037121010C	**506667**	N	506666
1.6 i	*1E7/3/5/E*	E	1598	AEK, AFT	A	Y		07/94 ▸ 02/98	037121010C	**506667**	N	506666
1.8 i	*1E7/3/5*	E	1781	ANN, ANP, AAM, ABS, ADZ	M	Y		09/93 ▸ 02/98	037121010C	**506667**	N	506666
1.8 i	*1E7/3/5*	E	1781	ABS, ANP, ADZ	A	Y		08/85 ▸ 02/98	037121010C	**506667**	N	506666
2.0 i	*1E7/3/5*	E	1984	AGG, 2E, AKR, ADY	M	Y		09/93 ▸ 02/98	037121010C	**506667**	N	506666
2.0 i	*1E7/3/5*	E	1984	AGG, 2E, ADY	A	Y		09/93 ▸ 12/97	037121010C	**506667**	N	506666
1.9 TDi	*1E7/3/5*	D	1896	ALE, AFN, 1Z, AHU	M	Y		08/95 ▸ 02/98	037121010C	**506667**	N	506666
1.9 TDi	*1E7/3/5*	D	1896	1Z, AHU	A	Y		08/95 ▸ 12/97	037121010C	**506667**	N	506666
Golf III (91>97)												
1.4,1.4 i	*1H1/0/2/3/B, 1H5/0/2/B*	E	1390	APQ, AEX	M	Y		08/95 ▸ 05/98	030121008D	**506385**	CR	
1.4,1.4 i	*1H52, 1H1/2/3*	E	1391	ABD	M	Y		11/91 ▸ 06/95	030121005LX	**506282**	CR	
1.6,1.6 i	*1H1/0/2/3/5/B/E, 1H5/0/2 3/5/B*	E	1598	AEK, AFT, AKS	M	Y		11/91 ▸ 02/99	037121010C	**506667**	N	506666
1.6	*1H1/2/3*	E	1598	AEA, ABU	M	Y		09/92 ▸ 06/95	030121005LX	**506282**	CR	
1.6	*1H1/0/2/3*	E	1598	AEE	M	Y		07/95 ▸ 12/97	030121008D	**506385**	CR	
1.6 i	*1H1/0/2/3/B, 1H5/0/2/3/B*	E	1598	AFT, AEK	A	Y		10/94 ▸ 02/99	037121010C	**506667**	N	506666
1.8,1.8 i	*1H1/0/2/3/5, 1H5/0/2/3/5*	E	1781	ABS, AAM, ADZ, ACC, ANN, ANP	M	Y		11/91 ▸ 04/99	037121010C	**506667**	N	506666
1.8 i	*1H15*	E	1781	ADZ	M	Y		10/94 ▸ 12/97	035121004AX	**506190**	CR	
1.8,1.8 i	*1H1/0/2/3, 1H5/0/2/3*	E	1781	ADZ, ABS, AAM, ANP, ANN	A	Y		11/91 ▸ 02/99	037121010C	**506667**	N	506666
2.0 16V,2.0 E,2.0 i	*1H33, 1H1/0/2/3/5/6, 1H5 0/2/3/5*	E	1984	AGG, ADY, ABF, 2E, AEP, AKR	M	Y		11/91 ▸ 04/99	037121010C	**506667**	N	506666
2.0 E,2.0 i	*1H1/0/2/3, 1H5/0/2/3*	E	1984	AGG, 2E, ADY, AEP	A	Y		11/91 ▸ 02/99	037121010C	**506667**	N	506666
2.8 VR6	*1H16*	E	2792	AAA	M	Y		01/92 ▸ 12/97	021121004X	**506484**	N	
2.8 VR6	*1H16*	E	2792	AAA	A	Y		07/92 ▸ 12/97	021121004X	**506484**	N	
2.9 i VR6	*1H56, 1H1/3/6*	E	2861	ABV	M	Y		01/94 ▸ 04/99	021121004X	**506484**	N	
1.9 D,1.9 D Ecomatic 1.9 SDi,1.9 SDi Ecomatic 1.9 TD,1.9 TDi	*1H0/0, 1H1/0/2/3/5, 1H5/0 2/3/5*	D	1896	AFN, 1Y, AHU, AEY, AAZ, 1Z ALE	M	Y		11/91 ▸ 04/99	037121010C	**506667**	N	506666
1.9 SDi,1.9 SDi Ecomatic	*1H1/2/3*	D	1896	AEY	M	Y		01/95 ▸ 06/95	028121004	**506513**	N	
1.9 TD,1.9 TDi	*1H1/0/2/3, 1H5/0/2/3/B*	D	1896	AHU, AFN, AAZ, 1Z	A	Y		11/91 ▸ 02/99	037121010C	**506667**	N	506666
Golf III Cabriolet (98>2002)												
1.6 i 1E-Y-000 001 ▸	*1E7/1/2/3/4/6/F*	E	1598	AFT, AKS	M	Y		03/98 ▸	037121010C	**506667**	N	506666
1.6 i ▸ 1E-X030000	*1E7/1/2/3/4/6/F*	E	1598	AFT	A	Y		03/98 ▸	037121010C	**506667**	N	506666
1.8 i ▸ 1E-X030000	*1E7/1/2/3/4/6*	E	1781	AAM, ANN, ANP, ADZ	M	Y		03/98 ▸	037121010C	**506667**	N	506666
1.8 i 1E-Y-000 001 ▸ 1E-X030000	*1E7/1/2/3/4/6*	E	1781	ANP, ADZ	A	Y		03/98 ▸	037121010C	**506667**	N	506666
2.0 i 1E-Y-000 001 ▸	*1V73, 1E7/1/2/3/4/6*	E	1984	AKR, AGG, AWG, ATU	M	Y		03/98 ▸	037121010C	**506667**	N	506666
2.0 i 1E-Y-000 001 ▸	*1V73, 1E7/1/2/3/4/6*	E	1984	AGG, AWF, AWG, ATU	A	Y		03/98 ▸	037121010C	**506667**	N	506666

• **New** Nouveau **Nuevo** Novo **Nuovo** Nieuw **Neu** Yeni Новый Nou

VOLKSWAGEN (.../...)

Golf III Cabriolet (98>2002) (.../...)

1.9 TDi 1E-Y-000 001 ▸	*1E7/1/2/3/4/6*	D	1896	ALE, AHU, AFN, AVG	M	Y		03/98 ▸	037121010C	**506667**	N	506666

Golf IV (97>2003)

2.0 i 1J-3-600001 ▸ 1J-3-600000	*1J1/0/1/2/3, 1J5/0/1/2/3*	F	1984	BEH	M	Y	23 teeth	05/02 ▸	06A121011T	**506532**	CR	
1.4 i 16V	*1J1/0/1/2, 1J5/0/1/2/3*	E	1390	AHW, BCA, AXP, APE, AKQ	M	Y		05/01 ▸	036121005S	**506576**	CR	
1.4 i 16V	*1J12*	E	1390	AHW	A	Y		05/01 ▸	036121005S	**506576**	CR	
1.6 FSI 16V,1.6 i 16V	*1J1/0/1/2/3/5, 1J5/0/1/2/3/5*	E	1595	BAD, AZD, AUS, BCB, ATN	M	Y		11/99 ▸	036121008G	**506706**	CR	
1.8 i 20V,1.8 i Turbo 20V	*1J1/2/3/5/6, 1J5/2/3*	E	1781	AUM, AGU, AGN	A	Y	23 teeth	04/01 ▸ 05/06	06A121011T	**506532**	CR	
1.8 i,1.8 i 20V 1.8 i Turbo 1.8 i Turbo 20V 1J-3-600001 ▸ 1J-3-600000	*1J1/0/1/2/3/5/6, 1J5/0/1/2/3/5*	E	1781	AUQ, AUM, AGN, ARZ, AGU	M	Y	23 teeth	04/01 ▸	06A121011T	**506532**	CR	
2.0 i ▸ 1J-3-600000	*1J1/0/1/2/3/5/6, 1J5/0/1/2/3/5*	E	1984	AZG, AQY, APK, AZJ, AZH	M	Y	23 teeth	05/01 ▸	06A121011T	**506532**	CR	
2.0 i 1J-3-600001 ▸ 1J-3-600000	*1J25, 1J1/0/1/2/3/5, 1J5/0/1/2/3/5*	E	1984	AZJ, AQY, APK	A	Y	23 teeth	05/01 ▸	06A121011T	**506532**	CR	
2.3 i VR5 20V ▸ 1J-2-500000	*1J1/0/1/2/3/5/6, 1J5/3/5*	E	2324	AGZ, AQN	M	N		10/97 ▸	071121005	**506587**	N	
2.3 i VR5 20V 1J-2-500001 ▸ 1J-2-500000	*1J1/0/1/2/3/5, 1J5/3/5*	E	2324	AQN, AGZ	A	N		10/97 ▸	071121005	**506587**	N	
2.8 i V6 24V 1J-2-500001 ▸	*1J53*	E	2792	BDE	M	Y		03/02 ▸	022121011	**506798**	N	
2.8 i V6 24V 2.8 i VR6 24V	*1J5/3/5/6*	E	2792	AUE, AQP, BDE	A	Y		05/99 ▸ 04/02	021121004X	**506484**	N	
2.8 i V6 24V 2.8 i VR6 24V ▸ 1J-2-500000	*1J1/3/5/6, 1J5/3/5/6*	E	2792	AUE, AQP, BDE	M	Y		05/99 ▸ 04/02	021121004X	**506484**	N	
3.2 i V6	*1J1R*	E	3189	BFH	M	Y		06/02 ▸	022121011	**506798**	N	
3.2 i V6	*1J1R*	E	3189	BFH	A	Y		06/02 ▸	022121011	**506798**	N	
1.9 TDi	*1J53, 1J1/3/6*	D	1896	ARL	M	Y		09/00 ▸	038121011H	**506699**	CR	
1.9 TDi	*1J1/0/1/2/3/6, 1J5/0/1/2/3*	D	1896	ASZ, ATD, AXR	M	Y		04/02 ▸	038121011GX	**506872**	CR	
1.9 SDi,1.9 TDi	*1J1/0/1/2/3/5/6, 1J5/0/1/2/3/5*	D	1896	AGR, ALH, AQM, AHF, AGP, ASV	M	Y		10/97 ▸	038121011A	**506533**	CR	
1.9 TDi	*1J1/0/1/2/3/5/6, 1J5/0/1/2/3/5*	D	1896	AJM, ATD, AUY, AXR, ASZ	M	Y		05/99 ▸ 04/02	038121011CX	**506871**	CR	
1.9 TDi	*1J1/0/1/2/3/5, 1J5/0/1/2/3/5*	D	1896	AUY, ASZ, ATD	A	Y		01/00 ▸ 06/02	038121011CX	**506871**	CR	
1.9 TDi	*1J1/0/1/2/3, 1J5/0/1/2/3*	D	1896	ATD, ASZ	A	Y		05/02 ▸	038121011GX	**506872**	CR	
1.9 TDi	*1J1/0/1/2/3/5, 1J5/0/1/2/3/5*	D	1896	AGR, ALH, AHF	A	Y		10/97 ▸ 04/02	038121011A	**506533**	CR	

Golf V (2003>)

1.4 i 16V	*1K1/0/1/2*	E	1390	BCA	M	Y		10/03 ▸	036121005S	**506576**	CR	
1.4 FSi 16V	*1K1/0/1/2*	E	1390	BKG,BLN	M	Y		10/03 ▸ 05/06	03C121005C	●**506867**	N	
1.4 FSi 16V	*1K1/0/1/B, 1K5/0/1/2*	E	1390	CAXA	M	Y		06/07 ▸	03C121008E	●**506950**	N	
1.4 FSi 16V	*1K1/0/1/B, 1K5/0/1/2*	E	1390	CAXA	A	Y		11/07 ▸	03C121005R	●**506950**	N	
1.6 FSi 16V	*1K1/0/1/2/B*	E	1598	BAG,BLF,BLP	M	Y		10/03 ▸	03C121005LX	●**506867**	N	
1.6 FSi 16V	*1K1/0/1/2*	E	1598	BAG,BLF,BLP	A	Y		10/03 ▸	03C121005SX	●**506867**	N	
2.0 FSi 16V,2.0 TFSi 16V	*1K5V, 1K1/1/2/3/9/D*	E	1984	AXX, BYD, BWA	M	Y	23 teeth	09/04 ▸	06F121011X	**506876**	CR	
2.0 FSi 16V,2.0 TFSi 16V	*1K5V, 1K1/1/2/3/9/D*	E	1984	BYD, BWA, AXX	A	Y	23 teeth	09/04 ▸	06F121011X	**506876**	CR	
2.0 FSi 16V	*1K1/1/2/B*	E	1984	AXW,BLR,BLX,BLY,BVX,BVY,BVZ	M	Y		10/03 ▸	06B121011HX	**506790**	CR	
2.0 FSi 16V	*1K1/1/2/B*	E	1984	AXW,BLR,BLX,BLY,BVX,BVY,BVZ	A	Y		10/03 ▸	06B121011HX	**506790**	CR	
3.2 i VR6 24V	*1K14*	E	3189	BUB	M	Y		11/05 ▸	022121011	**506798**	N	
3.2 i VR6 24V	*1K14*	E	3189	BUB	A	Y		08/05 ▸	022121011	**506798**	N	
1.9 TDi	*1K1/0/1/2/B, 1K5/0/1/2*	D	1896	BKC, BLS, BXE, BRU, BXF, BJB	M	Y		10/03 ▸	045121011H	**506700**	CR	
1.9 TDi	*1K1/0/1/2/B, 1K5/0/1/2*	D	1896	BXE, BLS, BKC	A	Y		10/03 ▸	045121011F	**506700**	CR	
2.0 TDi 16V	*1K1/0/1/2/3/B, 1K5/1/2*	D	1968	AZV, BKD, BMN	M	Y		10/03 ▸	03G121011	**506699**	CR	
2.0 SDi	*1K1/0/1/2*	D	1968	BDK	M	Y		01/04 ▸	045121011F	**506700**	CR	
2.0 TDi,2.0 TDi 16V	*1K1/0/1/2/B, 1K5/1/2*	D	1968	BMM, BVB	M	Y		12/04 ▸	038121011J	**506872**	CR	

• **New** Nouveau **Nuevo** Novo **Nuovo** Nieuw **Neu** Yeni Новый Nou

Valeo

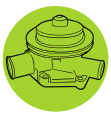

			CC						OE	Valeo		

VOLKSWAGEN (.../...)

Golf V (2003>) (.../...)

2.0 TDi 16V	1K1/0/1/2/3/B	D	1968	BKD, AZV, BMN	A	Y		10/03 ▸	03G121011	**506699**	CR	
2.0 TDi	1K1/B, 1K5/1/2	D	1968	BMM	A	Y		05/06 ▸	038121011J	**506872**	CR	

Golf V Plus (2005>)

1.4 i 16V	5M1/0/1	E	1390	BCA	M	Y		01/05 ▸	036121005S	**506576**	CR	
1.4 FSi 16V	5M1/0/1/2	E	1390	BLN	M	Y		07/05 ▸ 05/06	03C121005C	●**506867**	N	
1.6 i	5M1/0/1/2	E	1595	BSF	M	Y		05/05 ▸	03C121005LX	●**506867**	N	
1.6 i	5M1/0/1/2	E	1595	BSF	A	Y		05/05 ▸	03C121005D	●**506867**	N	
1.6 FSi 16V	5M1/0/1/2	E	1598	BLF	M	Y		01/05 ▸	03C121005L	●**506867**	N	
1.6 FSi 16V	5M1/0/1/2	E	1598	BLF	A	Y		04/05 ▸	03C121005S	●**506867**	N	
2.0 FSi 16V	5M1/1/2	E	1984	BLR,BLY,BVY,BVZ	M	Y		01/05 ▸	06B121011H	**506790**	CR	
2.0 FSi 16V	5M1/1/2	E	1984	BLR,BLY,BVY,BVZ	A	Y		01/05 ▸	06B121011MX	**506790**	CR	
1.9 TDi	5M1/0/1/2/C	D	1896	BLS, BKC, BXF, BRU, BXE	M	Y		01/05 ▸	045121011H	**506700**	CR	
1.9 TDi	5M1/0/1/2/C	D	1896	BKC, BLS, BXE	A	Y		01/05 ▸	045121011H	**506700**	CR	
2.0 TDi 16V	5M1/0/1/2	D	1968	BEE, BKD, AZV	M	Y		01/05 ▸	038121011H	**506699**	CR	
2.0 TDi,2.0 TDi 16V	5M1/0/1/2/C	D	1968	BMM, BVB	M	Y		12/05 ▸	038121011J	**506872**	CR	
2.0 TDi 16V	5M1/0/1/2	D	1968	AZV, BKD	A	Y		01/05 ▸	038121011H	**506699**	CR	
2.0 TDi	5M1/0/1/2/C	D	1968	BMM	A	Y		02/06 ▸	038121011J	**506872**	CR	

Golf VI (2008>)

1.4 i 16V	5K13, 5K14, 5K12, AJ52	E	1390	BUD,CGGA	M	Y		10/08 ▸	036121008L	**506576**	CR	
1.4 TFSi,1.4 TSI 16V	5K1/2/3/4, AJ5/2/3/4	E	1390	CAXA	M	Y		10/08 ▸	03C121005R	●**506950**	N	
1.4 TFSi,1.4 TSI 16V	5K1/2/3/4, AJ5/2/3/4	E	1390	CAXA	A	Y		10/08 ▸	03C121005R	●**506950**	N	
2.0 TFSi 16V	5K1R	E	1984	CDLA,CDLC,CDLF	A	Y	23 teeth	11/09 ▸	06F121011X	**506876**	CR	
2.0 TFSi 16V	5K1R	E	1984	CDLA,CDLC,CDLF	A	Y	23 teeth	11/09 ▸	06F121011	**506876**	CR	
2.0 TFSi 16V	5K1R	E	1984	CDLA,CDLC,CDLF	M	Y	23 teeth	11/09 ▸	06F121011X	**506876**	CR	
2.0 TFSI 16V	5K1R	E	1984	CDLA,CDLC,CDLF	M	Y	23 teeth	11/09 ▸	06F121011	**506876**	CR	
1.6 TDI 16V	5K1/2/3/4, AJ5/2/3/4/5	D	1598	CAYB,CAYC	M	Y	19 teeth	02/09 ▸	03L121011	▲**506974**	CR	
1.6 TDI 16V	5K1/2/3/4, AJ5/2/3/4	D	1598	CAYC	A	Y	19 teeth	02/09 ▸	03L121011	▲**506974**	CR	
2.0 TDI 16V	5K1/2/3/4	D	1968	CFFA,CFFB	M	Y	19 teeth	11/09 ▸	03L121011X	▲**506974**	CR	
2.0 TDI 16V	5K1/2/3/4	D	1968	CFFB	A	Y	19 teeth	11/09 ▸	03L121011	▲**506974**	CR	

Golf VI Plus (2009>)

1.4 i 16V	5212, 5213	E	1390	BUD,CGGA	M	Y		01/09 ▸	036121008L	**506576**	CR	
1.6 TDI 16V	521/2/3/4	D	1598	CAYB,CAYC	M	Y	19 teeth	05/09 ▸	03L121011	▲**506974**	CR	
1.6 TDI 16V	521/2/3/4	D	1598	CAYC	A	Y	19 teeth	01/09 ▸	03L121011	▲**506974**	CR	

Iltis

1.7 18-G-000 001 ▸	E	1679	YX, WL		Y		08/85 ▸ 07/88	037121010C	**506667**	N	506666
1.7 ▸ 18-C-000 887	E	1679	WL, YX		Y		01/79 ▸ 12/82	026121010DX	**506227**	N	506066
1.6 TD 18-G-000 001 ▸	D	1588	1C		Y		08/87 ▸ 07/88	037121010C	**506667**	N	506666

Jetta I (78>83)

1.1	161/0/2, 162/1/2	E	1093	GG	M	Y		08/80 ▸ 07/84	052121005AX	**506013**	CR	
1.1	1622	E	1093	GG	M	Y		08/83 ▸ 07/84	026121010C	**506667**	N	506666
1.3	1630, 161/0/2	E	1272	GS, GF	M	Y		08/79 ▸ 07/84	052121005AX	**506013**	CR	
1.3	161/0/2	E	1272	GS, GF	M	Y		08/83 ▸ 07/84	026121010C	**506667**	N	506666
1.5	1611, 1632	E	1457	JB	M	Y		08/78 ▸ 07/84	037121010C	**506667**	N	506666
1.5	1632, 161/0/1/2	E	1457	GH, JB	M	Y		08/78 ▸ 04/82	055121010X	**506227**	N	506066
1.5	1632, 161/1/2	E	1457	JB, GH	A	Y		08/78 ▸ 07/83	037121010C	**506667**	N	506666
1.5	1632, 161/0/1/2	E	1457	GH, JB	A	Y		08/78 ▸ 04/82	055121010X	**506227**	N	506066
1.6 .C-630 001 ▸	1620, 161/0/2	E	1588	FR, EM, EG, EJ	M	Y		08/78 ▸ 07/84	037121010C	**506667**	N	506666
1.6	1620, 1641, 161/0	E	1588	FR, EM	A	Y		08/79 ▸ 04/82	055121010X	**506227**	N	506066
1.6 .C-630 001 ▸	1610, 1620	E	1588	EM, FR	A	Y		04/82 ▸ 07/83	037121010C	**506667**	N	506666
1.6 ▸ .C-630 000	1620, 1641, 161/0/1/2	E	1588	EM, FR, EG, EJ	M	Y		08/78 ▸ 04/82	055121010X	**506227**	N	506066
1.7	1610	E	1716	EN	M	Y		08/80 ▸ 04/82	055121010X	**506227**	N	506066
1.7	1610	E	1716	EN	M	Y		04/82 ▸ 07/84	037121010C	**506667**	N	506666

• **New** Nouveau **Nuevo** Novo **Nuovo** Nieuw **Neu** Yeni Новый Nou

VOLKSWAGEN (.../...)

Jetta I (78>83) (.../...)

1.7	*1610*	E	1716	EN	A	Y		08/80 ▸ 07/81	055121010X	**506227**	N	506066
1.8	*1612, 1632*	E	1781	JJ, DX	M	Y		08/82 ▸ 07/84	037121005C	**506667**	N	506666
1.6 D,1.6 TD	*1620, 161/0/1*	D	1588	JK, CY, CR	M	Y		03/82 ▸ 07/84	037121010C	**506667**	N	506666
..C630001 ▸												
1.6 D	*161/0/1*	D	1588	CR, JK	A	Y		04/82 ▸ 07/83	037121010C	**506667**	N	506666
.C.630 001 ▸												
1.6 D	*1611*	D	1588	CR	M	Y		08/80 ▸ 04/82	055121010X	**506227**	N	506066
▸ -C-630 000												
1.6 D	*1611*	D	1588	CR	A	Y		08/81 ▸ 04/82	055121010X	**506227**	N	506066
▸ -C-630 000												

Jetta II (83>92)

1.05	*1G22, 167/0/1*	E	1043	HZ	M	Y		08/86 ▸ 10/91	052121005AX	**506013**	CR	
1.3,1.3 i	*165/0/1/2/G/H/J, 167/0/1 2/3/G/H/J, 168/0/1, 1G2/2 3*	E	1272	MH, HK, NZ, GT, NU, 2C	M	Y		08/83 ▸ 11/92	052121005AX	**506013**	CR	
1.3	*1650*	E	1272	HK	M	Y		08/83 ▸ 07/85	037121010C	**506667**	N	506666
1.6	*165/0/1/2/G/H/J, 167/0/1/2/G/H/J 168/0/1/2, 1G2/2/3*	E	1595	RF, EZ, PN, HM	M	Y		08/83 ▸ 11/92	037121010C	**506667**	N	506666
1.6	*165/0/1/2, 167/0/1/2, 168/0/1/2 1G2/2/3*	E	1595	HM, EZ, PN, RF	A	Y		08/83 ▸ 11/92	037121010C	**506667**	N	506666
1.8,1.8 i,1.8 i 16V	*165/0/1/2/3/G/H/J/N/S/T 167/0/1/2/3/7/G/H/J/K/N S/T/U/V/Z, 168/0/2/3/7/U V/Z, 1G2/1/2/3/5*	E	1781	EV, RV, PF, RP, RD, GZ, GX HV, GU-K, GU, PB, 1P, RH, KR PL	M	Y		01/84 ▸ 10/91	037121010C	**506667**	N	506666
1.8,1.8 i	*165/0/1/2/G/H/J, 167/0/1 2/7/G/H/J/K, 168/0/2/7 1G2/1/2/3*	E	1781	GU, RP, RH, GX, HV, RV, PF	A	Y		01/84 ▸ 10/91	037121010C	**506667**	N	506666
1.6 D,1.6 TD	*165/0/1/2/T, 167/0/1/2/7 T, 168/0/1/2, 1G2/1/2/3/5*	D	1588	ME, MF, SB, JR, JP, 1V, RA	M	Y		08/83 ▸ 11/92	037121010C	**506667**	N	506666
1.6 D	*165/0/1/2, 167/0/1/2, 1G2/2/3*	D	1588	JP	A	Y		08/83 ▸ 07/90	037121010C	**506667**	N	506666

Jetta (2000>2003)

2.0 i	*1J6/4/5*	E	1984	AZG	M	Y	23 teeth	05/01 ▸	06A121011TX	**506532**	CR	
2.0 i	*1J6/4/5*	E	1984	AZG	A	Y	23 teeth	02/01 ▸ 04/01	06A121012X	**506532**	CR	

Jetta III (2005>2010)

1.4 TSi 16V	*1K2/0/1/2*	E	1390	CAXA	M	Y		07/07 ▸	03C121005R	●**506950**	N	
1.4 TSi 16V	*1K2/0/1/2*	E	1390	CAXA	A	Y		10/07 ▸	03C121005R	●**506950**	N	
1.6 FSI 16V	*1K2/0/1/2*	E	1598	BLF	M	Y		09/05 ▸	03C121005S	●**506867**	N	
2.0 TFSI 16V	*1K22*	E	1984	BWA	M	Y	23 teeth	09/05 ▸	06F121011X	**506876**	CR	
2.0 TFSI 16V	*1K22*	E	1984	BWA	A	Y	23 teeth	10/05 ▸	06F121011X	**506876**	CR	
2.0 FSI 16V	*1K2/1/2*	E	1984	BLR,BLY,BVY,BVZ	M	Y			06B121011M	**506790**	CR	
1K-7-054 617 ▸ 1K-7-054 616												
2.0 FSi 16V	*1K2/1/2*	E	1984	BLR,BLY,BVY,BVZ	A	Y			06B121011HX	**506790**	CR	
1K-7-054 617 ▸ 1K-7-054 616												
1.6 TDI 16V	*1K22*	D	1598	CAYB,CAYC	M	Y	19 teeth	07/09 ▸ 05/10	03L121011X	▲**506974**	CR	
1.9 TDI	*1K2/0/1/2*	D	1896	BLS, BKC	M	Y		08/05 ▸	045121011F	**506700**	CR	
1.9 TDI	*1K2/0/1/2*	D	1896	BLS, BKC	A	Y		09/05 ▸	045121011F	**506700**	CR	
2.0 TDi 16V	*1K2/0/1/2*	D	1968	AZV, BKD	M	Y		08/05 ▸	038121011H	**506699**	CR	
2.0 TDi	*1K2/0/1/2*	D	1968	BMM	M	Y		10/05 ▸	038121011J	**506872**	CR	
2.0 TDi 16V	*1K2/0/1/2*	D	1968	AZV, BKD	A	Y		09/05 ▸	038121011H	**506699**	CR	
2.0 TDi	*1K2/0/1/2*	D	1968	BMM	A	Y		10/05 ▸	038121011J	**506872**	CR	

Lupo

1.0 i	*6X10*	E	999	AHT	M	y		10/98 ▸ 05/00	047121013J	**506786**	N	
1.0 i	*6X10*	E	999	ANV, AER, ALD, ALL, AUC	M	Y		10/98 ▸	030121008C	**506577**	CR	
1.4 i	*6X10*	E	1390	AUD	M	Y		09/00 ▸	030121008C	**506577**	CR	
1.4 FSI 16V,1.4 i 16V	*6E10, 6X10*	E	1390	BBY, AHW, APE, AFK, AUA, AUB AQQ, AKQ, ARR	M	Y		09/00 ▸	036121005S	**506576**	CR	
1.4 i 16V	*6X10*	E	1390	AHW, AKQ, AUA, BBY, APE	A	Y		10/98 ▸	036121005S	**506576**	CR	
1.6 i 16V	*6E10*	E	1598	AVY	M	Y		06/00 ▸	036121008G	**506706**	CR	
1.2 TDi	*6E10*	D	1191	AYZ	M	Y		09/01 ▸	045121011F	**506700**	CR	
6E-2-010 001 ▸												

• **New** Nouveau **Nuevo** Novo **Nuovo** Nieuw **Neu** Yeni Новый Nou

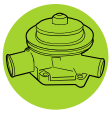

Type Ctr.		cc						OE	Valeo		
VOLKSWAGEN (.../...)											
Lupo (.../...)											
1.2 TDi *6E10*	D	1191	ANY, AYZ	M	Y		05/99 ▸ 09/01	045121011B	**506873**	CR	
1.4 TDi *6X10*	D	1422	AMF	M	Y		04/02 ▸	045121011F	**506700**	CR	
6X-2-100 001 ▸											
1.4 TDi *6X10*	D	1422	AMF	M	Y		05/99 ▸ 04/02	045121011B	**506873**	CR	
▸ 6X-2-100 000											
1.7 SDi *6X10*	D	1716	AKU	M	Y		10/98 ▸	028121004V	**506513**	N	
New Beetle (98>2001)											
1.8 i Turbo 20V *9C13, 1C1/5/7/8*	E	1781	AWV, AVC, APH, AWU	M	Y	23 teeth		06A121011T	**506532**	CR	
1C-X-425 096 ▸											
1.8 i Turbo 20V *1C1/5/7/8*	E	1781	APH, AWV	A	Y	23 teeth		06A121011T	**506532**	CR	
1C-X-425 096 ▸											
2.0 i *9C13, 1C1/3/8*	E	1984	AEG, AQY	M	Y	23 teeth	01/98 ▸	06A121011T	**506532**	CR	
1C-X-425 096 ▸ 1C-X-425 095											
2.0 i *9C13, 1C1/3/5/8*	E	1984	AEG, AQY, APK	A	Y	23 teeth	01/98 ▸	06A121011T	**506532**	CR	
1C-X-425 096 ▸ 1C-X-425 095											
2.3 i V5 20V *9C13*	E	2324	AQN	M	N		10/00 ▸ 05/01	071121005	**506587**	N	
1.9 TDi *9C13*	D	1896	ATD	M	Y		10/00 ▸ 05/01	038121011CX	**506871**	CR	
1.9 TDi *9C13, 1C1/3/5/8*	D	1896	ALH	M	Y		11/98 ▸ 05/01	038121011A	**506533**	CR	
1.9 TDi *9C13, 1C1/3/5/8*	D	1896	ALH	A	Y		11/98 ▸ 05/01	038121011A	**506533**	CR	
New Beetle (2001>2005)											
1.4 i 16V *1C13, 1Y73*	E	1390	BCA	M	Y		08/01 ▸	036121005S	**506576**	CR	
1.8 i Turbo 20V *1Y73, 9C13, 1C1/3/6/7/8/S*	E	1781	AWU, AWV, AWP	M	Y	23 teeth	06/01 ▸	06A121011T	**506532**	CR	
1.8 i Turbo 20V *9C13, 1C1/3/5/8/S*	E	1781	BKF, AWU, AWV	A	Y	23 teeth	06/01 ▸	06A121011T	**506532**	CR	
2.0 i *1C1/3/5/8, 9C13, 1Y7/3/5*	E	1984	BER, BEJ, AQY, AZJ, APK, AEG BEV	M	Y	23 teeth	06/01 ▸	06A121011T	**506532**	CR	
2.0 i *1C1/3/5/8, 9C13, 1Y7/3/5*	E	1984	AQY, APK, AZJ, BEJ, BER, AEG BEV	A	Y	23 teeth	06/01 ▸	06A121011T	**506532**	CR	
2.3 i V5 20V *1C13, 9C13*	E	2324	AQN	M	N		06/01 ▸	071121005	**506587**	N	
9C-622 001 ▸											
1.9 TDi *9C13*	D	1896	ALH	M	Y		06/01 ▸	038121011A	**506533**	CR	
1.9 TDi *1C13, 9C13*	D	1896	ATD	M	Y		06/01 ▸	038121011CX	**506871**	CR	
1.9 TDi *1Y73*	D	1896	AXR	M	Y		06/03 ▸	038121011GX	**506872**	CR	
1.9 TDi *1C13, 9C13*	D	1896	ALH	A	Y		06/01 ▸	038121011A	**506533**	CR	
New Beetle (2005>)											
1.4 i 16V *1C13, 1Y73*	E	1390	BCA	M	Y		07/05 ▸ 06/06	036121005S	**506576**	CR	
▸ 9C-6-599 000											
1.9 TDi *1Y73, 1C1/3/4/5*	D	1896	BSW	M	Y		07/05 ▸	038121011G	**506872**	CR	
1.9 TDi *1C1/4/5*	D	1896	BEW	A	Y		07/05 ▸	038121011G	**506872**	CR	
Passat (73>82)											
1.3 *3220, 321/0/1, 3240, 323/0/1, 331/0/1, 332/0/1*	E	1272	ZF, ZA	M	Y		05/73 ▸ 01/78	055121010X	**506227**	N	506066
1.3 *321/2, 3320, 331/0/1/2*	E	1272	FZ, FY	M	Y		01/78 ▸ 07/81	052121005AX	**506013**	CR	
1.5 *321/0/1/2, 331/0/1/2, 332/0/1/2*	E	1471	YJ, ZC, ZB	M	Y		05/73 ▸ 12/75	055121010X	**506227**	N	506066
1.5 *321/0/1, 331/0/1/2, 332/0/1/2*	E	1471	ZB, ZC, YJ	A	Y		05/73 ▸ 12/75	055121010X	**506227**	N	506066
1.6 *3225, 321/0/5, 3245, 3315, 3325*	E	1588	YP, YY, WP, WY, YN	M	Y		09/79 ▸ 07/82	037121010C	**506667**	N	506666
32-B-100 000 ▸ *323/5/7*											
1.6 *3215, 3237*	E	1588	YP, WY	A	Y		04/81 ▸ 07/82	037121010C	**506667**	N	506666
32-B-100 000 ▸											
1.6 *321/0/1/2/5, 322/0/1/5, 323/0/1/2/5*	E	1588	WZ, YH, WY, WP, FS, YS, YG	M	Y		09/75 ▸ 07/81	055121010X	**506227**	N	506066
▸ 32-B-100 000 *7, 324/0/1/2/5, 331/0/1/2/5, 332/0/2/5*			YN, YY, YP								
1.6 *3221, 321/0/1/5, 3241, 3311, 3321*	E	1588	YH, FS, YG, YN, YP, WY	A	Y		09/75 ▸ 07/81	055121010X	**506227**	N	506066
▸ 32-B-100 000 *323/0/1/7*											
1.9 *3236*	E	1921	WN	M	Y		01/81 ▸ 07/81	035121005E	**506190**	CR	
1.9 *3236*	E	1921	WN	A	Y		01/81 ▸ 07/81	035121005E	**506190**	CR	
2.2 *321/5/6*	E	2144	WE	M	Y		01/81 ▸ 07/81	035121005E	**506190**	CR	
2.2 *3216*	E	2144	WE	A	Y		01/81 ▸ 07/81	035121005E	**506190**	CR	
1.5 D *313/1, 321/0/1/2, 322/0/1/2, 323/0/2, 324/0/1/2, 331/0/1/2, 332/0/1/2*	D	1471	CK	M	Y		08/77 ▸ 07/80	055121010X	**506227**	N	506066

• **New** Nouveau **Nuevo** Novo **Nuovo** Nieuw **Neu** Yeni Новый Nou

			CC					OE	Valeo			
VOLKSWAGEN (.../...)												
Passat (73>82) (.../...)												
1.6 D *3216*		D	1588	CR	M	Y		08/80 ▸ 07/81	037121010C	**506667**	N	506666
Passat (82>88)												
1.3	*321/5/6/7, 322/5/7, 323/5/6/7, 324 5/6/7, 331/5/6/7, 332/5/6/7*	E	1272	FZ, FY	M	Y		08/81 ▸ 07/83	052121005AX	**506013**	CR	
1.3	*321/5/6/7, 322/5/7, 323/5/6/7*	E	1272	FY, FZ	M	Y		08/82 ▸ 07/83	052121004X	**506240**	CR	
1.3	*321/0/1, 323/0/1/2/5/R/S, 327/R/S 331/0/1/5/6/7/R/S*	E	1297	EP, EU	M	Y		08/83 ▸ 04/88	037121010C	**506667**	N	506666
1.3	*331/6/7*	E	1297	EU	A	Y		08/83 ▸ 07/84	037121005C	**506667**	N	506666
1.6 32-B-100 000 ▸	*321/5, 324/5/6/7/A/B/C, 331/5/6/7/A B/C, 332/5/6/7/A/B/C*	E	1588	WV, YP, WY	M	Y		08/81 ▸ 12/84	037121010C	**506667**	N	506666
1.6	*321/5, 324/5/6/7, 331/5/6/7, 332/5 6/7*	E	1588	YP, WV, WY	A	Y		08/81 ▸ 12/84	037121010C	**506667**	N	506666
1.6	*321/0/1/2, 323/0/1/2/D/J/K/L/R/S/T 324/0/R, 328R, 327/R/S/T, 331/0/1 6/7/C/D/K/L/R/S/T, 332/0/5*	E	1595	DT, DTA, PP, JU	M	Y		08/84 ▸ 04/88	037121010C	**506667**	N	506666
1.6	*321/0/1/2, 323/0/1/2/D/R/S/T, 327/R S/T, 331/0/1/D/R/S/T*	E	1595	DT	A	Y		08/84 ▸ 04/88	037121010C	**506667**	N	506666
1.8,1.8 i	*321/0/1/2, 323/0/1/2/D/E G/H/J/K/L/R/S/T, 324/D/S 327/7/J/K/L/R/S/T, 328/S T, 331/0/1/D/E/G/H/J/K/L R/S/T/U/Y, 332/1/S*	E	1781	DS, JV, JN, RM	M	Y		08/83 ▸ 07/88	037121010C	**506667**	N	506666
1.8,1.8 i	*321/0/1/2, 324S, 323/0/1 2/D/G/H/J/K/L/R/S/T, 327 J/K/L/R/S/T, 328/S/T, 331 0/1/D/E/G/H/J/K/L/R/S/T 332/1/S*	E	1781	JN, JV, RM, DS	A	Y		08/84 ▸ 04/88	037121010C	**506667**	N	506666
1.9	*321/5/6, 323/5/6/7, 324/5/6/7, 331 5/6/7, 332/5/6/7*	E	1921	WN	M	Y		08/81 ▸ 07/83	035121004AX	**506190**	CR	
1.9	*321/5/6/7, 323/5/6/7, 324/5/6/7 331/5/6/7, 332/5/6/7*	E	1921	WN	A	Y		08/81 ▸ 07/84	035121004AX	**506190**	CR	
2.0 i	*323/1/2/6/7/A/D/R/T, 324/1/2/A/R/T 327/C/R/T, 328/C/R/T, 331/1/6/7/8 D/P/R/T/N/W, 332/A/D/R/T*	E	1994	HP, JS	M	Y		08/83 ▸ 04/88	035121005E	**506190**	CR	
2.0 i	*323/1/6/7/A/D/R/T, 324/1/2/A/D/R/T 327/C/R/T, 328/C/T, 331/1/6/7/A/D R/T, 332/A/D/R/T*	E	1994	JS, HP	A	Y		08/83 ▸ 04/88	035121005E	**506190**	CR	
2.2,2.2 i	*321/5/6/7, 323/5/6/7, 331 5/6/7*	E	2144	WE	M	Y		08/81 ▸ 07/83	035121004AX	**506190**	CR	
2.2,2.2 i	*321/5/6/7, 323/5/6/7, 331 5/6/7*	E	2144	WE	A	Y		08/81 ▸ 07/83	035121004AX	**506190**	CR	
2.3,2.3 i	*324K, 323/D/E/J/K, 328K 327/F/J/K, 332K, 331/8/D E/J/K/Q/W/Z*	E	2226	JT, KV, HY, KX	M	Y		08/84 ▸ 07/88	035121005E	**506190**	CR	
2.3 i	*323/E/K, 328K, 327/F/J/K, 332K, 331 E/J/K*	E	2226	KX	A	Y		08/85 ▸ 04/88	035121005E	**506190**	CR	
1.6 D,1.6 TD	*321/0/1/2/5/6/7, 322/5/6 7, 323/0/1/2/7/D/R/S/T 324/0/1/2/7/R/S/T, 327/4 L/R/S/T, 328/R/S/T, 331/0 1/5/6/7/D/R/S/T, 332/0/1 5/6/7/R/S/T*	D	1588	CR, JK, CY	M	Y		08/81 ▸ 04/88	037121010C	**506667**	N	506666
1.6 D,1.6 TD	*321/0/1/2/5/6/7, 322/5/6 7, 323/0/1/2/7/R/S/T, 324 5/6/7, 327/R/S/T, 331/0/1 5/6/7/R/S/T, 332/5/6/7*	D	1588	JK, CR, CY	A	Y		08/81 ▸ 04/88	037121010C	**506667**	N	506666
Passat (88>93)												
1.6,1.6 i 31-N-0000001 ▸	*312/1/2/3, 315/1/2/3*	E	1595	EZ, ABN, 1F, RF	M	Y		04/88 ▸ 07/92	037121010C	**506667**	N	506666
1.6,1.6 i	*312/2/3, 315/2/3*	E	1595	EZ, RF, 1F	A	Y		08/88 ▸ 07/89	037121010C	**506667**	N	506666
1.8,1.8 i,1.8 i 16V	*312/1/2/3/5, 315/1/2/3/5*	E	1781	PB, ABS, PF, KR, RP	A	Y		08/88 ▸ 10/93	037121010C	**506667**	N	506666

• **New** Nouveau **Nuevo** Novo **Nuovo** Nieuw **Neu** Yeni Новый Nou

Valeo

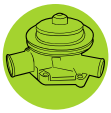

VOLKSWAGEN (.../...)

Passat (88>93) (.../...)

1.8,1.8 i,1.8 i 16V 31-N-000001 ▸ 31-M-400000	312/1/2/3/5, 315/1/2/3/5	E	1781	KR, RP, AAM, PF, PB, ABS, PG	M	Y		04/88 ▸ 10/93	037121010C	**506667**	N	506666
2.0,2.0 i,2.0 i 16V 31-N-0000001 ▸ 31-M-400000	312/1/2/3/5/8, 315/1/2/3 5/8	E	1984	2E, 9A, ACX	M	Y		04/88 ▸ 10/93	037121010C	**506667**	N	506666
2.0,2.0 i,2.0 i 16V ▸ 31-M-400000	312/1/2/3/5/8, 315/1/2/3 5/8	E	1984	9A, 2E	A	Y		08/88 ▸ 10/93	037121010C	**506667**	N	506666
2.8 i,2.8 i V6	312/3/5/8, 315/3/5/8	E	2792	AAA	M	Y		06/91 ▸ 10/93	021121004X	**506484**	N	
2.8 i,2.8 i V6	312/3/5/8, 315/3/5/8	E	2792	AAA	M	Y		06/91 ▸ 10/93	023121004X	**506388**	CR	
2.8 i,2.8 i V6,2.8 i VR6	312/3/5/8, 315/3/5/8	E	2792	AAA	A	Y		06/91 ▸ 10/93	023121004X	**506388**	CR	
2.8 i,2.8 i V6,2.8 i VR6	312/3/5/8, 315/3/5/8	E	2792	AAA	A	Y		06/91 ▸ 10/93	021121004X	**506484**	N	
1.6 TD	312/1/2/3/5, 315/1/2/3/5	D	1588	SB, RA	M	Y		08/88 ▸ 10/93	037121010C	**506667**	N	506666
1.6 TD	312/2/3/5, 315/3/5	D	1588	RA	A	Y		08/88 ▸ 07/90	037121010C	**506667**	N	506666
1.9 D,1.9 TD	312/1/2/3/8, 315/1/2/3	D	1896	AAZ, 1Y	M	Y		08/88 ▸ 10/93	037121010C	**506667**	N	506666
1.9 D,1.9 TD ▸ 31-M-400000	312/1/2/3, 315/1/2/3	D	1896	AAZ, 1Y	A	Y		08/88 ▸ 10/93	037121010C	**506667**	N	506666

Passat (93>97)

1.6 i	3A2/2/3/5/A, 3A5/2/3/5/C	E	1598	AFT, AEK	M	Y		10/94 ▸ 12/96	037121010C	**506667**	N	506666
1.6 i	3A2/2/3/5, 3A5/2/3/5	E	1598	AEK, AFT	A	Y		10/94 ▸ 12/96	037121010C	**506667**	N	506666
1.8 i	3A2/2/3/5, 3A5/2/3/5	E	1781	ADZ, ABS, AAM	M	Y		10/93 ▸ 12/96	037121010C	**506667**	N	506666
1.8 i	3A2/2/3/5, 3A5/2/3/5	E	1781	ADZ, ABS	A	Y		10/93 ▸ 12/96	037121010C	**506667**	N	506666
2.0 i,2.0 i 16V	3A2/2/3/5, 3A5/2/3/5	E	1984	2E, ABF, AGG, ADY, AEP, ACX	M	Y		10/93 ▸ 05/97	037121010C	**506667**	N	506666
2.0 i	3A2/2/3/5, 3A5/2/3/5	E	1984	AGG, ADY, 2E, ACX, AEP	A	Y		10/93 ▸ 12/96	037121010C	**506667**	N	506666
2.8 i VR6	3A2/3/6, 3A5/3/6	E	2792	AAA	M	Y		10/93 ▸ 12/96	021121004X	**506484**	N	
2.8 i VR6	3A2/3/6, 3A5/3/6	E	2792	AAA	A	Y		10/93 ▸ 12/96	021121004X	**506484**	N	
2.9 i VR6	3A56	E	2861	ABV	M	Y		01/94 ▸ 05/97	021121004A	**506484**	N	
1.9 TD,1.9 TDi	3A2/2/3/5/A, 3A5/2/3/5	D	1896	AAZ, AFN, 1Z, AHU	M	Y		10/93 ▸ 12/96	037121010C	**506667**	N	506666
1.9 TDi	3A2/2/3/5/A, 3A5/2/3/5/A	D	1896	1Z, AFN, AHU	A	Y		10/93 ▸ 12/96	037121010C	**506667**	N	506666

Passat (96>2000)

1.6 i	3B2/3, 3B5/3/A	E	1595	ADP, ANA	M	Y		10/96 ▸	050121010AX	**506603**	N	506594
1.6 i	3B23, 3B53	E	1595	ADP, ANA	A	Y		10/96 ▸	050121010AX	**506603**	N	506594
1.8 i,1.8 i 20V 1.8 i Turbo 20V	3B2/3/A, 3B5/3/A	E	1781	ARG, APT, AFY, AEB, ADR, ANB APU	M	Y		10/96 ▸	050121010AX	**506603**	N	506594
1.8 i 20V	3B23, 3B53	E	1781	ADR	M	Y		06/97 ▸ 01/99	026121005K	**506667**	N	506666
1.8 i 20V	3B23, 3B53	E	1781	APT, ARG	M	Y		01/99 ▸ 04/99	052121005AX	**506013**	CR	
1.8 i,1.8 i 20V 1.8 i Turbo 20V	3B53, 3B2/3/A	E	1781	AFY, ADR, AEB, ARG, APT, ANB	A	Y		10/96 ▸	050121010AX	**506603**	N	506594
2.3 i VR5 20V	3B23	E	2324	AGZ	M	Y		10/96 ▸ 08/98	050121010AX	**506603**	N	506594
2.3 i VR5 20V	3B23, 3B53	E	2324	AGZ	M	N		10/96 ▸	071121005	**506587**	N	
2.3 i VR5 20V	3B23, 3B53	E	2324	AGZ	A	N		10/96 ▸	071121005	**506587**	N	
2.8 i V6 30V	3B2/6/B, 3B5/6/B	E	2771	AGE, ATX, AQD, APR, ACK, ALG	M	Y		01/97 ▸	078121006	**506517**	SS	
2.8 i V6 30V	3B26	E	2771	AQD	M	Y		05/97 ▸	050121010AX	**506603**	N	506594
2.8 i V6 30V	3B2/6/B, 3B5/6/B	E	2771	AQD, ATX, ACK, AGE, ALG, APR	A	Y		05/97 ▸	078121006	**506517**	SS	
2.8 i V6 30V	3B26	E	2771	AQD	A	Y		05/97 ▸	050121010A	**506603**	N	506594
1.9 TDi	3B2/3/A, 3B5/3/A	D	1896	AHH, AFN, AHU, AVG	M	Y		10/96 ▸	028121004V	**506513**	N	
1.9 TDi	3B23, 3B53	D	1896	AJM, ATJ, AVB	M	Y		01/99 ▸ 11/99	038121011CX	**506871**	CR	
1.9 TDi	3B23, 3B53	D	1896	AVG, AHH, AHU, AFN	A	Y		10/96 ▸	028121004V	**506513**	N	
1.9 TDi	3B23, 3B53	D	1896	ATJ, AJM	A	Y		03/99 ▸ 08/00	038121011CX	**506871**	CR	
2.5 TDi V6	3B26, 3B56	D	2496	AFB, AKN	M	Y		08/99 ▸	059121004E	**506591**	SS	
2.5 TDi V6	3B26, 3B56	D	2496	AFB, AKN	A	Y		02/99 ▸	059121004E	**506591**	SS	

Passat (2000>)

1.8 i Turbo 20V	3B64	E	1781	AWT	M	Y		10/00 ▸	038121011C	**506871**	CR	
1.8 i Turbo 20V	3B3/0/1/2/3/4, 3B6/0/1/2 3/4	E	1781	AWT	M	Y	23 teeth	10/00 ▸	06A121011T	**506532**	CR	
1.8 i Turbo 20V	3B3/0/1/2/3/4/6, 3B6/0/1 2/3/4/6	E	1781	AWT, AWM	A	Y	23 teeth	10/00 ▸	06A121011T	**506532**	CR	
1.8 i Turbo 20V	3B66	E	1781	AWM	A	Y		10/00 ▸	078121004Q	**506517**	SS	
2.0 i	3B3/0/1/2/3, 3B6/0/1/2/3	E	1984	AZM	M	Y	23 teeth	10/00 ▸	06A121011T	**506532**	CR	
2.0 i 20V	3B63, 3B3/2/3	E	1984	ALT	M	Y		10/00 ▸	038121011C	**506871**	CR	
2.0 i 20V	3B6/0/2	E	1984	ALT	A	Y		10/00 ▸	038121011C	**506871**	CR	
2.0 i 20V	3B63	E	1984	ALT	A	Y		10/00 ▸	059121004E	**506591**	SS	

• **New** Nouveau **Nuevo** Novo **Nuovo** Nieuw **Neu** Yeni Новый Nou

VOLKSWAGEN (.../...)

Passat (2000>) (.../...)

2.0 i,2.0 i 20V	*3B3/0/1/2/3, 3B6/0/1/2/3*	E	1984	AZM, ALT	A	Y	23 teeth	10/00 ▸	06A121011T	**506532**	CR	
2.0 i 20V	*3B32*	E	1984	ALT	A	N		11/01 ▸ 04/02	071121005	**506587**	N	
2.3 i V5	*3B3/1/2/3, 3B6/1/2/3*	E	2324	AZX	A	N		01/01 ▸	071121005	**506587**	N	
2.3 i V5	*3B3/1/2/3, 3B6/1/2/3*	E	2324	AZX	M	N		01/01 ▸	071121005	**506587**	N	
3B-2-315 001 ▸ 3B-2-315 000												
2.8 i V6	*3B3/2, 3B6/0/2*	E	2771	AMX, ATQ	M	Y		10/00 ▸	038121011C	**506871**	CR	
2.8 i V6	*3B3/1/3, 3B6/1/3*	E	2771	ATQ, AMX	M	Y	23 teeth	10/00 ▸	06A121011L	**506532**	CR	
2.8 i V6	*3B3/1/2/3, 3B6/0/1/2/3*	E	2771	BBG, AMX, ATQ	M	Y		10/00 ▸	078121006	**506517**	SS	
2.8 i V6	*3B3/1/2/3/4/5, 3B6/1/2/3 4/5*	E	2771	ATQ, BBG, AMX	A	Y		10/00 ▸	078121006	**506517**	SS	
2.8 i V6	*3B63*	E	2771	AMX	A	N		01/01 ▸	071121005	**506587**	N	
2.8 i V6	*3B31, 3B64*	E	2771	ATQ	A	Y	23 teeth	03/01 ▸	06A121011L	**506532**	CR	
2.8 i V6	*3B6/2/3*	E	2771	AMX	M	N		01/01 ▸ 11/01	071121005	**506587**	N	
▸ 3B-2-315 000												
4.0 i W8	*3B68*	E	3999	BDN	M	N		01/01 ▸	071121005	**506587**	N	
4.0 i W8	*3B68*	E	3999	BDP	A	Y	23 teeth	10/00 ▸	06A121011L	**506532**	CR	
4.0 i W8	*3B37, 3B68*	E	3999	BDN	A	Y		10/00 ▸	078121004Q	**506517**	SS	
4.0 i W8	*3B67, 3B3/7/8*	E	3999	BDN, BDP	A	N		01/01 ▸	071121005	**506587**	N	
4.0 i W8	*3B38*	E	3999	BDN	A	Y		05/02 ▸	038121011C	**506871**	CR	
1.9 TDi	*3B3/0/1/2/3, 3B6/0/1/2/3*	D	1896	AVF, AVB, AWX	M	Y		10/00 ▸	038121011GX	**506872**	CR	
1.9 TDi	*3B3/0/1/2/3, 3B6/0/1/2/3*	D	1896	AWX, AVF, AVB	M	Y		10/00 ▸	038121011CX	**506871**	CR	
1.9 TDi	*3B3/0/1/2/3, 3B6/0/1/2/3*	D	1896	AVB, AVF	A	Y		10/00 ▸	038121011GX	**506872**	CR	
1.9 TDi	*3B3/0/1/2/3, 3B6/0/1/2/3*	D	1896	AVF, AVB	A	Y		10/00 ▸	038121011CX	**506871**	CR	
2.0 TDi	*3B3/0/1/2/3, 3B6/0/1/2/3*	D	1968	BGW	M	Y		11/03 ▸	038121011GX	**506872**	CR	
2.5 TDi,2.5 TDi V6	*3B3/1/2/3, 3B6/1/2/3*	D	2496	AKN, BDG	M	Y		10/00 ▸	059121004E	**506591**	SS	
2.5 TDi	*3B61*	D	2496	BDH	M	Y	23 teeth	10/00 ▸	06A121011L	**506532**	CR	
2.5 TDi	*3B3/2, 3B6/2/3*	D	2496	BDH	M	Y		10/00 ▸	078121004Q	**506517**	SS	
2.5 TDi	*3B61*	D	2496	BAU	A	Y	23 teeth	10/00 ▸	06A121011L	**506532**	CR	
2.5 TDi,2.5 TDi V6	*3B3/1/2/3, 3B6/1/2/3*	D	2496	AKN, BAU, BDG	A	Y		10/00 ▸	059121004E	**506591**	SS	
2.5 TDi	*3B3/1, 3B6/2/3*	D	2496	BAU	A	Y		10/00 ▸	078121004Q	**506517**	SS	
2.5 TDi	*3B31*	D	2496	BDH	M	N		01/03 ▸ 11/01	071121005	**506587**	N	
▸ 3B-2-315 000												

Passat (2005>)

1.4 FSi 16V,1.4 TFSi 16V	*3C2/0/1/2/3, 3C5/0/1/2/3*	E	1390	CAXA	M	Y		05/07 ▸	03C121005R	●**506950**	N	
1.4 TFSi 16V	*3C20, 3C50*	E	1390	CAXA	A	Y		05/08 ▸ 11/10	03C121008B	●**506950**	N	
1.6 FSi 16V	*3C2/0/1/2/3, 3C5/0/1/2/3*	E	1598	BLF	M	Y		03/05 ▸	03C121005L	●**506867**	N	
1.6 FSi 16V	*3C2/0/1/2/3, 3C5/0/1/2/3*	E	1598	BLF	A	Y		03/05 ▸	03C121005SX	●**506867**	N	
2.0 TFSi 16V	*3C2/1/2/3, 3C5/1/2/3*	E	1984	AXX, BWA	M	Y	23 teeth	03/05 ▸	06F121011X	**506876**	CR	
2.0 TFSi 16V	*3C2/1/2/3, 3C5/1/2/3*	E	1984	AXX, BWA	A	Y	23 teeth	03/05 ▸	06F121011X	**506876**	CR	
2.0 FSi 16V	*3C2/0/1/2/3, 3C5/0/1/2/3*	E	1984	BLR,BLX,BLY,BVX,BVY,BVZ	M	Y		03/05 ▸	06B121011HX	**506790**	CR	
2.0 FSi 16V	*3C2/0/1/2/3, 3C5/0/1/2/3*	E	1984	BLR,BLY,BVY,BVZ	A	Y		03/05 ▸	06B121011HX	**506790**	CR	
1.6 TDi 16V	*3C2/0/1/2/3, 3C5/0/1/2/3*	D	1598	CAYC	M	Y	19 teeth	08/09 ▸ 11/10	03L121011	▲**506974**	CR	
1.9 TDi	*3C2/0/1/2/3, 3C5/0/1/2/3*	D	1896	BLS, BXE, BKC	M	Y		03/05 ▸	045121011F	**506700**	CR	
2.0 TDi	*3C2/0/1/2/3, 3C5/0/1/2/3*	D	1968	BVE, BKP, BMA, BWV, BUZ, BMR	M	Y		03/05 ▸	03G121011	**506699**	CR	
2.0 TDi	*3C2/0/1/2/3, 3C5/0/1/2/3*	D	1968	BMP, BVD	M	Y		03/05 ▸	038121011GX	**506872**	CR	
2.0 TDi	*3C2/0/1/2/3, 3C5/0/1/2/3*	D	1968	BMR, BUZ, BKP, BVE, BWV, BMA	A	Y		03/05 ▸	03G121011	**506699**	CR	
2.0 TDi	*3C2/0/1/2/3, 3C5/0/1/2/3*	D	1968	BMP, BVD	A	Y		03/05 ▸	038121011GX	**506872**	CR	

Phaeton (2002>2007)

3.2 i VR6 24V	*3D2/5/6, 3D8/5/6*	E	3189	AYT, BKL	M	Y		05/02 ▸	022121011	**506798**	N	
3.2 i VR6 24V	*3D2/5/6, 3D8/5/6*	E	3189	AYT, BKL, BRK	A	Y		05/02 ▸	022121011	**506798**	N	
4.2 i V8 32V	*3D2/5/6, 3D8/5/6*	E	4172	BGH,BGJ	A	Y		05/03 ▸	077121004N	**506794**	SS	
3.0 TDi V6 24V	*3D2/5/6, 3D8/5/6*	D	2967	BMK	A	Y		09/04 ▸ 05/07	06E121005F	**506911**	N	

Phaeton (2007>)

3.2 i V6 24V	*3D3/5/6, 3D7/5/6*	E	3189	BKL, BRK	A	Y		06/07 ▸	022121011	**506798**	N	
3.0 TDi V6 24V	*3D3/5/6, 3D4/5/6, 3D6/5/6 3D7/5/6*	D	2967	CARA/F,CARB/F,CEXA/F	A	Y		03/07 ▸	06E121005F	**506911**	N	

Polo (74>81)

0.8	*8610*	E	800	HE	M	Y		01/76 ▸ 07/78	052121005AX	**506013**	CR	
0.9	*8610*	E	895	HA	M	Y		04/75 ▸ 09/81	052121005AX	**506013**	CR	

• **New** Nouveau **Nuevo** Novo **Nuovo** Nieuw **Neu** Yeni Новый Nou

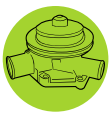

			CC						OE	Valeo			
VOLKSWAGEN (.../...)													
Polo (74>81) (.../...)													
1.1	*8610*	E	1093	HB, HD, HC	M	Y		04/75 ▸ 07/81	052121005AX	**506013**	CR	
1.1	*8610*	E	1093	HB	M	Y		04/75 ▸ 07/81	052121004X	**506240**	CR	
1.3	*8610*	E	1272	HJ, HH	M	Y		01/77 ▸ 07/81	052121004X	**506240**	CR	
1.3	*8610*	E	1272	HH, HJ	M	Y		01/77 ▸ 07/81	052121005AX	**506013**	CR	
Polo (81>86)													
1.05	*8711, 8730, 867/0*	E	1043	GL	M	Y		10/81 ▸ 10/86	052121005AV	**506013**	CR	
1.1	*8711, 8730, 867/0*	E	1093	HB	M	Y		10/81 ▸ 07/83	052121005AV	**506013**	CR	
1.3	*867/0, 871/1/3*	E	1272	GK, HK, HH, HW, HJ, GT	M	Y		10/81 ▸ 07/86	052121005AV	**506013**	CR	
Polo (86>90)													
1.05	*801/1/2, 8031, 802/1/2*	E	1043	GL	M	Y		08/86 ▸ 10/90	052121005AV	**506013**	CR	
1.3	*8021, 801/1/2/5/6, 803/1/2/5/6*	E	1272	NZ	M	Y		08/86 ▸ 10/90	030121005H	**506282**	CR	
1.3	*801/1/2/5, 803/1/2/5/6*	E	1272	GT, GK	M	Y		08/86 ▸ 10/90	052121005AV	**506013**	CR	
1.3		E	1272	NZ		Y		12/86 ▸ 10/90	030121005H	**506282**	CR	
1.3 D	*801/1/2/6, 802/1/2, 803/1/2/5/6*	D	1272	MN	M	Y		08/86 ▸ 10/90	031121005CX	**506240**	CR	
Polo (90>94)													
1.05	*801/2/5/6, 802/1/2, 803/2/6*	E	1043	HZ, AAU	M	Y		10/90 ▸ 10/94	052121005AX	**506013**	CR	
1.3	*8022, 801/2/5/6, 803/2/5/6*	E	1272	AAV, NZ	M	Y		10/90 ▸ 10/94	030121005LX	**506282**	CR	
1.3,1.3 i	*8022, 801/2/5/6, 803/2/5/6*	E	1272	2G, 3F, PYK, PY	M	Y		10/90 ▸ 10/94	052121005AX	**506013**	CR	
1.4 D	*8022, 801/2/5/6, 803/2/6*	D	1391	1W	M	Y		10/90 ▸ 10/94	031121005CX	**506240**	CR	
Polo (94>99)													
1.0 i	*6N10*	E	999	AER, ALL	M	Y		07/96 ▸ 12/99	030121008C	**506577**	CR	
1.0 i	*6N10*	E	1043	AEV	M	Y		10/94 ▸	030121008D	**506385**	CR	
1.3 i	*6N10*	E	1296	ADX	M	Y		10/94 ▸ 04/97	030121008D	**506385**	CR	
1.4 i	*6V20, 6V50, 6N1/0*	E	1390	APQ, ANX, AEX, AKV	M	Y		07/95 ▸ 12/99	030121008D	**506385**	CR	
1.4 i 16V	*6N10*	E	1390	AFH	M	Y		04/96 ▸ 12/99	036121005M	**506578**	CR	
1.4 i	*6N10*	E	1390	AEX, ANX, APQ, AKV	A	Y		10/95 ▸ 12/99	030121008D	**506385**	CR	
1.6 i	*6V20*	E	1595	1F	M	Y		05/96 ▸ 09/97	037121010C	**506667**	N	506666
1.6 i	*6V20, 6V50*	E	1598	AFT	M	Y		05/96 ▸ 09/99	037121010C	**506667**	N	506666
1.6 i 16V	*6N10*	E	1598	AJV	M	Y		08/98 ▸ 12/99	036121005F	**506706**	CR	
1.6 i	*6V20, 6V50*	E	1598	AFT	A	Y		03/98 ▸ 08/99	037121010C	**506667**	N	506666
1.6 i ▸ 6N-X-120 000	*6N10*	E	1598	AEE, AHS	A	Y		09/95 ▸	030121008D	**506385**	CR	
1.6 i ▸ 6N-X-120 000	*6V20, 6V50, 6N1/0*	E	1598	AEA, AEE, ALM	M	Y		10/94 ▸	030121008D	**506385**	CR	
1.8 i	*6V20*	E	1781	ADD	M	Y		03/98 ▸ 08/99	037121010C	**506667**	N	506666
2.0 i	*6V20*	E	1984	ADC	M	Y		08/99 ▸ 08/99	037121010C	**506667**	N	506666
2.0 i	*6V20*	E	1984	ADC	A	Y		08/99 ▸ 08/99	037121010C	**506667**	N	506666
1.7 SDI	*6N10*	D	1716	AKU, AHG	M	Y		04/97 ▸ 12/99	028121004	**506513**	N	
1.7 SDi	*6V20, 6V50*	D	1716	AKW	M	Y		11/97 ▸ 08/99	037121010C	**506667**	N	506666
1.9 D,1.9 SDI	*6N10*	D	1896	AEF, AGD	M	Y		01/95 ▸ 12/99	028121004V	**506513**	N	
1.9 SDi,1.9 TDi	*6V20, 6V50*	D	1896	AEY, 1Y, AHU, ALE, AFN	M	Y		05/96 ▸ 09/99	037121010C	**506667**	N	506666
Polo (99>2001)													
1.0 i	*6N2/0/1/2/3*	E	999	ALD, AUC	M	Y		01/00 ▸ 09/01	030121008C	**506577**	CR	
1.4 i 16V	*6N20*	E	1390	AFK, AUB, AHW, AUA	M	Y		10/99 ▸	035121005E	**506190**	CR	
1.4 i 16V	*6V20, 6V50, 6N2/0/1/2/3/6*	E	1390	AUB, APE, AHW, AUA, AFK	M	Y		10/99 ▸ 09/01	036121005S	**506576**	CR	
1.4 i,1.4 i 16V	*6V20, 6V50, 6N2/0/1/2/3*	E	1390	APE, AKK, ANW, AUD, AKP	M	Y		10/99 ▸	030121008C	**506577**	CR	
1.4 i	*6N2/0/1/2/3*	E	1390	AUD, AKK	A	Y		05/00 ▸ 09/01	030121008C	**506577**	CR	
1.4 i 16V	*6N2/0/1/2/3*	E	1390	AHW, AUA	A	Y		10/99 ▸ 09/01	036121005S	**506576**	CR	
1.4 i 16V	*6N20*	E	1390	AUA, AHW	A	Y		10/99 ▸	035121005E	**506190**	CR	
1.6 i	*6V20, 6V50*	E	1598	ALM	M	Y		10/99 ▸	030121008D	**506385**	CR	
1.6 i 16V	*6N20*	E	1598	ARC	M	Y		11/99 ▸	036121008G	**506706**	CR	
1.6 i 16V	*6N20*	E	1598	ARC	M	Y		11/99 ▸	036121005J	**506578**	CR	
1.8 i	*6V20*	E	1781	ADD	M	Y		03/00 ▸ 09/01	037121010C	**506667**	N	506666
2.0 i	*6V20*	E	1984	ADC	M	Y		06/00 ▸ 09/01	037121010C	**506667**	N	506666
2.0 i	*6V20*	E	1984	ADC	A	Y		06/00 ▸ 09/01	037121010C	**506667**	N	506666
1.4 TDi	*6N2/0/1/2/3*	D	1422	AMF, ATL	M	Y		10/99 ▸	045121011B	**506873**	CR	
1.7 SDi ▸ 6N-2-010 000	*6N20*	D	1716	AKU	M	Y		10/99 ▸	028121004V	**506513**	N	

• **New** Nouveau **Nuevo** Novo **Nuovo** Nieuw **Neu** Yeni Новый Nou

VOLKSWAGEN (.../...)

Polo (99>2001) (.../...)

1.9 D,1.9 SDi	6N2/0/1/2/3	D	1896	AEF, AGD, ASX	M	Y		10/99 ▸	028121004V	**506513**	N	
1.9 SDi,1.9 TDi	6V20, 6V50	D	1896	AQM, ASV, AGR, ALH, AGP	M	Y		10/99 ▸	038121011AV	**506533**	CR	

Polo (2001>)

1.2 i,1.2 i 12V,1.2 i 6V	9N1/0/1/2/3/5	E	1198	AWY, BME, BMD, AZQ	M	N		11/01 ▸	03D121013B	**506855**	N	
1.4 16V,1.4 i 16V	9N1/0/1/2/3/5, 9N2/0/1	E	1390	BBZ, BKY, BBY	M	Y		05/02 ▸	036121005S	**506576**	CR	
1.4 i 16V	9A2/2/4, 9N1/0/1/2/3, 9N2 0/1	E	1390	BKY, BBY	A	Y		11/01 ▸	036121005S	**506576**	CR	
1.4 FSI 16V	9N1/0/1/2/3/5	E	1390	AXU	M	Y		02/02 ▸ 05/05	03C121005C	●**506867**	N	
1.6 i	9A2/1/2/3	E	1595	BPA	M	Y		10/04 ▸	030121008D	**506385**	CR	
1.6 i	9A2/1/2/3/4	E	1598	BAH	M	Y		09/02 ▸	030121008D	**506385**	CR	
2.0 i	9A2/2/3/4	E	1984	BBX	M	Y	23 teeth	09/02 ▸	06A121012X	**506532**	CR	
1.4 TDi	9N1/0/1/2/3/5, 9N2/0/1	D	1422	BAY, AMF	M	Y			045121011F	**506700**	CR	
9N-2-100 001 ▸												
1.9 TDi	9N1/0/1/2/3/5	D	1896	BLT, ASZ, ATD, AXR	M	Y			045121011F	**506700**	CR	
9N-2-100 001 ▸												
1.9 SDi	9A2/2/4, 9N2/0/1	D	1896	ASY	M	Y		09/02 ▸	045121011G	**506701**	CR	

Polo (2005>)

1.2 i,1.2 i 12V	9N3/0/1/3/5	E	1198	BMD, BME	M	N		04/05 ▸	03D121005	**506855**	N	
1.4 i 16V	9N3/0/1/3/5	E	1390	BBZ, BKY, BUD	M	Y		04/05 ▸	036121005S	**506576**	CR	
1.4 i 16V	9N3/0/1/3/5	E	1390	BKY	A	Y		04/05 ▸	036121005S	**506576**	CR	
1.4 FSi 16V	9N3/0/1/3	E	1390	AXU	M	Y		04/05 ▸ 05/06	03C121005B	●**506867**	N	
1.6 i 16V	9N3/0/1/3/5	E	1598	BTS	M	Y		05/06 ▸	03C121005KX	●**506867**	N	
1.6 i 16V	9N30	E	1598	BTS	A	Y		11/06 ▸	03C121005KX	●**506867**	N	
1.8 GTI Turbo 20V	9N36	E	1781	BBU,BJX	M	Y	23 teeth	08/05 ▸	06A121012	**506532**	CR	
1.4 TDi	9N3/0/1/3/5	D	1422	BNM, BMS, BNV, BWB	M	Y		04/05 ▸	045121011F	**506700**	CR	
1.9 TDi	9N3/0/1/3/5	D	1896	ASZ, ATD, BLT, AXR, BMT	M	Y		04/05 ▸	045121011H	**506700**	CR	
1.9 SDi	9N3/0/1/3	D	1896	ASY	M	Y		04/05 ▸	045121011J	**506701**	CR	
9N-7-030 001 ▸												

Polo (2009>)

1.2 TDI 12V	6R1/2/3/4/C	D	1199	CFWA	M	Y	19 teeth	10/09 ▸	03L121011X	▲**506974**	CR	
1.6 TDI 16V	6R1/2/3/4/C	D	1598	CAYA/F,CAYB,CAYC	M	Y	19 teeth	06/09 ▸	03L121011	▲**506974**	CR	
1.6 TDI 16V	6R1/2/3/4/C	D	1598	CAYB	A	Y	19 teeth	06/09 ▸	03L121011X	▲**506974**	CR	

Santana

1.3	327/0/5	E	1297	EP	M	Y		08/83 ▸ 07/85	037121010C	**506667**	N	506666
1.6	327/6/7/C, 328/6/7/B/C	E	1588	WY, WV, YP	M	Y		08/81 ▸ 07/83	026121010CX	**506667**	N	506666
1.6	327/6/7, 328/6/7	E	1588	WY, WV, YP	A	Y		08/81 ▸ 12/82	026121010CX	**506667**	N	506666
1.6	327/0/1/2/5/6/7/A, 328/0/5	E	1595	JU, DT	M	Y		08/83 ▸ 03/88	037121010C	**506667**	N	506666
1.6	327/0/1/2/5/6/7	E	1595	DT	A	Y		08/83 ▸ 03/88	037121010C	**506667**	N	506666
1.8,1.8 i	327/0/1/2/5/6/7/B/C/G/H 328/1/6	E	1781	JV, DS, JN	M	Y		01/82 ▸ 03/88	037121010C	**506667**	N	506666
1.8,1.8 i	327/0/1/2/5/6/7/G/H, 328 1/6	E	1781	JN, DS	A	Y		01/83 ▸ 03/88	037121010C	**506667**	N	506666
1.9	327/6/7, 328/5/6/7	E	1921	WN	M	Y		08/81 ▸ 07/83	035121004AX	**506190**	CR	
1.9	327/6/7, 328/6/7	E	1921	WN	A	Y		08/81 ▸ 07/83	035121004AX	**506190**	CR	
2.0 i	327/1/2/6/7, 328/2/6/7	E	1994	JS, HP	M	Y		08/83 ▸ 03/88	035121004AX	**506190**	CR	
2.0 i	327/1/2/6/7, 328/2/7	E	1994	HP, JS	A	Y		08/83 ▸ 03/88	035121004AX	**506190**	CR	
2.2 i	3277	E	2144	WE	M	Y		08/81 ▸ 07/82	035121004AX	**506190**	CR	
2.2 i	327/6/7	E	2144	WE	A	Y		08/81 ▸ 07/83	035121004AX	**506190**	CR	
1.6 D,1.6 TD	237/5/6, 327/5/6/7, 328/6 7	D	1588	CR, JK, CY	M	Y		08/81 ▸ 03/88	037121010C	**506667**	N	506666
1.6 D,1.6 TD	237/7, 328/6/7	D	1588	CR, CY	A	Y		08/81 ▸ 07/83	037121010C	**506667**	N	506666

Scirocco

1.1	531//0/2	E	1093	FA, FJ	M	Y		04/74 ▸ 07/80	052121005AX	**506013**	CR	
1.3	531, 533	E	1272	HK, GF	M	Y		08/79 ▸ 07/84	052121005AX	**506013**	CR	
1.5	531, 533	E	1457	GH, FB, JB	M	Y		02/74 ▸ 07/83	055121010X	**506227**	N	506066
1.5	533	E	1457	JB	M	Y		08/81 ▸ 07/83	026121005H	**506667**	N	506666
1.5	531, 533	E	1457	FD, JB, GH	A	Y		02/74 ▸ 07/83	055121010X	**506227**	N	506066
1.5	533	E	1457	JB	A	Y		08/81 ▸ 07/83	026121005H	**506667**	N	506666

• **New** Nouveau **Nuevo** Novo **Nuovo** Nieuw **Neu** Yeni Новый Nou

Valeo

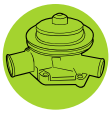

			cc						OE	Valeo		
VOLKSWAGEN (.../...)												
Scirocco (.../...)												
1.5	*531*	E	1471	FK, FH	A	Y		02/74 ▸ 12/75	055121010X	**506227**	N	506066
1.6	*531, 533*	E	1588	FR, EG, FV, EF, EJ, FP, EE EM, FT, FN	M	Y		08/75 ▸ 07/83	055121010X	**506227**	N	506066
1.6	*531, 533*	E	1588	FR, EG	M	Y		08/81 ▸ 07/83	026121005H	**506667**	N	506666
1.6	*531, 533*	E	1588	FP, EM, FT, FN, FV, FR, EF	A	Y		08/75 ▸ 07/83	055121010X	**506227**	N	506066
1.6	*533*	E	1588	FR	A	Y		08/81 ▸ 07/83	026121005H	**506667**	N	506666
1.6	*533//1/4*	E	1595	EW, EWA, HN	M	Y		08/83 ▸ 07/90	037121010C	**506667**	N	506666
1.6	*533*	E	1595	EW, HN	A	Y		08/83 ▸ 07/86	037121010C	**506667**	N	506666
1.7	*531, 533*	E	1716	EN	M	Y		08/80 ▸ 07/83	037121005C	**506667**	N	506666
1.7	*531*	E	1716	EN	A	Y		08/80 ▸ 07/81	037121005C	**506667**	N	506666
1.8,1.8 16V	*533//1/2/4*	E	1781	DX, JJ, EX, KT, JH, PL, KR	M	Y		08/82 ▸	037121010C	**506667**	N	506666
1.8	*5331*	E	1781	EX	A	Y		08/83 ▸ 07/90	037121010C	**506667**	N	506666
Scirocco (2008>)												
1.4 TSI 16V	*1372*	E	1390	CAXA	M	Y		11/08 ▸	03C121008BX	●**506950**	N	
Sharan (95>2000)												
1.8 i Turbo 20V	*7M8/2/3/5/9*	E	1781	AJH	M	Y	23 teeth	11/97 ▸ 02/00	06A121011L	**506532**	CR	
1.8 i Turbo 20V	*7M8/2/3/5/9*	E	1781	AJH	A	Y	23 teeth	11/97 ▸ 02/00	06A121011L	**506532**	CR	
2.0 i	*7M8/2/3/5/9*	E	1984	ADY	M	Y		09/95 ▸ 02/00	037121010C	**506667**	N	506666
2.0 i	*7M8/2/3/5/9*	E	1984	ADY	A	Y		09/95 ▸ 02/00	037121010C	**506667**	N	506666
2.8 i VR6	*7M8/3/5/9*	E	2792	AMY, AAA	M	Y		09/95 ▸ 02/00	021121004X	**506484**	N	
2.8 i VR6	*7M8/3/5/9*	E	2792	AAA, AMY	A	Y		09/95 ▸ 02/00	021121004X	**506484**	N	
1.9 TDi	*7M8/2/3/5/9*	D	1896	AFN, AHU, 1Z, AVG	M	Y		09/95 ▸ 02/00	037121010C	**506667**	N	506666
1.9 TDi	*7M8/2/3/9*	D	1896	ANU	M	Y		03/99 ▸ 02/00	038121011CX	**506871**	CR	
1.9 TDi	*7M8/2/3/5/9*	D	1896	AFN, AVG	A	Y		12/96 ▸ 07/99	037121010C	**506667**	N	506666
Sharan (2000>2003)												
1.8 i Turbo 20V	*7M9/2/3/5/9*	E	1781	AWC	M	Y	23 teeth	04/00 ▸	06A121011T	**506532**	CR	
1.8 i Turbo 20V	*7M9/2/3/5/9*	E	1781	AWC	A	Y	23 teeth	04/00 ▸	06A121011T	**506532**	CR	
2.0 i	*7M9/2/3/5/9*	E	1984	ATM	M	Y	23 teeth	04/00 ▸	06A121011T	**506532**	CR	
2.0 i	*7M9/2/3/5/9*	E	1984	ATM	A	Y	23 teeth	04/00 ▸	06A121011T	**506532**	CR	
2.8 i V6	*7M9/2/3/5/9*	E	2792	AYL	M	Y		11/01 ▸ 05/03	022121011	**506798**	N	
7M-2-035 001 ▸												
2.8 i V6,2.8 i VR6	*7M9/2/3/5/9*	E	2792	AYL	A	Y		11/01 ▸ 05/03	022121011	**506798**	N	
7M-2-035 001 ▸												
2.8 i V6	*7M9/2/3/5/9*	E	2792	AYL	M	Y		04/00 ▸	021121004X	**506484**	N	
▸ 7M-2-035 000												
2.8 i V6,2.8 i VR6	*7M9/2/3/5/9*	E	2792	AYL	A	Y		04/00 ▸	021121004X	**506484**	N	
▸ 7M-2-035 000												
1.9 TDi	*7M99*	D	1896	ASZ	M	Y			021121004X	**506484**	N	
7M-2-035 000 ▸												
1.9 TDi	*7M9/2/3/5/9*	D	1896	AUY, ANU	M	Y		04/00 ▸	038121011CX	**506871**	CR	
1.9 TDi	*7M9/2/3/5/9*	D	1896	ASZ	M	Y		11/02 ▸	045121011F	**506700**	CR	
1.9 TDi	*7M9/2/3/5/9*	D	1896	AUY	A	Y		10/00 ▸	038121011CX	**506871**	CR	
Sharan (2003>)												
1.8 i Turbo 20V	*7M6/0/1/2/3*	E	1781	AWC	M	Y	23 teeth	06/03 ▸ 06/05	06A121011T	**506532**	CR	
1.8 i Turbo 20V	*7M6/0/1/2/3*	E	1781	AWC	A	Y	23 teeth	06/03 ▸ 06/05	06A121011T	**506532**	CR	
2.0 i	*7M6/0/1/2/3*	E	1984	ATM	M	Y	23 teeth	06/03 ▸	06A121011T	**506532**	CR	
2.0 i	*7M6/0/1/2/3*	E	1984	ATM	A	Y	23 teeth	06/03 ▸	06A121011T	**506532**	CR	
2.8 i VR6	*7M6/0/1/2/3/S/T*	E	2792	AYL	M	Y		06/03 ▸	022121011	**506798**	N	
2.8 i VR6	*7M6/0/1/2/3/S/T*	E	2792	AYL	A	Y		06/03 ▸	022121011	**506798**	N	
1.9 TDi	*7M6/0/1/2/3/S/T*	D	1896	AUY, ANU, BVK	M	Y		06/03 ▸	038121011GX	**506872**	CR	
1.9 TDi	*7M6/0/1/2/3/S/T*	D	1896	ASZ, BTB	M	Y		06/03 ▸	045121011F	**506700**	CR	
1.9 TDi	*7M6/0/1/2/3/S/T*	D	1896	AUY, BVK	A	Y		06/03 ▸	038121011GX	**506872**	CR	
2.0 TDi	*7M6/0/1/2/3/S/T*	D	1968	BRT, BVH	M	Y		11/05 ▸	038121011GX	**506872**	CR	
Tiguan												
2.0 TDi 16V	*5N1/0/2*	D	1968	CFFB	M	Y	19 teeth	11/09 ▸	03L121011	▲**506974**	CR	
Touareg (2002>2006)												
3.2 i V6 24V	*7LAA*	E	3189	BMV, AZZ, BKJ	M	Y		01/03 ▸	022121011	**506798**	N	

• **New** Nouveau **Nuevo** Novo **Nuovo** Nieuw **Neu** Yeni Новый Nou

		Type Ctr.	cc					2 3	OE	Valeo		
VOLKSWAGEN (.../...)												
Touareg (2002>2006) (.../...)												
3.2 i V6 24V	*7L6/0/5, 7LA/A/B*	E	3189	BMV, AZZ, BAA, BKJ, BRJ	A	Y		11/02 ▸	022121011	**506798**	N	
4.2 i V8 40V	*7LA/A/B/C/D*	E	4172	AXQ	A	Y		12/02 ▸	077121004N	**506794**	SS	
2.5 TDi	*7LAA*	D	2460	BAC,BLK,BPD,BPE	M	Y		▸ 11/06	070121011DX	**506726**	N	
2.5 TDi	*7LAA*	D	2460	BAC,BLK,BPD,BPE	A	Y		▸ 11/06	070121011DX	**506726**	N	
3.0 TDi V6	*7LAA*	D	2967	BKS	M	Y		11/04 ▸ 11/06	06E121005F	**506911**	N	
3.0 TDi V6	*7LAA*	D	2967	BKS	A	Y		11/04 ▸ 11/06	06E121005F	**506911**	N	
Touareg II (2006>)												
2.5 TDi	*7L60*	D	2460	BPD,BPE	M	Y		12/06 ▸	070121011D	**506726**	N	
2.5 TDi	*7L60*	D	2460	BPD,BPE	A	Y		12/06 ▸	070121011D	**506726**	N	
3.0 TDi V6 24V	*7L60*	D	2967	BKS,CASC/F	M	Y		12/06 ▸	06E121005F	**506911**	N	
3.0 TDi V6 24V	*7L60*	D	2967	BKS,BUN,CASD/F	A	Y		12/06 ▸	06E121005F	**506911**	N	
Touran (2003>2006)												
2.0 i	*1T1/C/G/H/T*	F	1984	BSX	M	Y	23 teeth	02/06 ▸ 11/06	06A121012X	**506532**	CR	
1.6 FSi 16V	*1T1/B/C/F/G/H/T*	E	1598	BAG,BLF,BLP	M	Y		02/03 ▸	03C121005KX	●**506867**	N	
1.6 FSi 16V	*1T1/B/C/F/G/H/T*	E	1598	BAG,BLF,BLP	A	Y		02/03 ▸	03C121005KX	●**506867**	N	
2.0 FSi 16V	*1T1/G/H/T*	E	1984	AXW,BLX,BLY,BVY,BVZ	M	Y		10/03 ▸	06B121011H	**506790**	CR	
2.0 FSi 16V	*1T1/G/H/T*	E	1984	AXW,BLR,BLX,BLY,BVY,BVZ	A	Y		10/03 ▸	06B121011MX	**506790**	CR	
1.9 TDi	*1T1/B/C/F/G/H/T*	D	1896	BLS, BXJ, BRU, BXE, BKC, AVQ BXF	M	Y		02/03 ▸	045121011F	**506700**	CR	
1.9 TDi	*1T1/B/C/G/H/T*	D	1896	BLS, BKC	A	Y		08/03 ▸	045121011F	**506700**	CR	
2.0 TDi 16V	*1T1/F/G/H/T*	D	1968	AZV, BKD, BMN	M	Y		02/03 ▸	03G121011	**506699**	CR	
2.0 TDi	*1T1/G/H/T*	D	1968	BMM	M	Y		06/05 ▸ 11/06	038121011GX	**506872**	CR	
2.0 TDi 16V	*1T1/G/H/T*	D	1968	BKD, BMN	A	Y		08/03 ▸	03G121011	**506699**	CR	
2.0 TDi	*1T1/G/H/T*	D	1968	BMM	A	Y		06/05 ▸ 11/06	038121011GX	**506872**	CR	
Touran (2006>2010)												
2.0 i	*1T2/C/H/T*	F	1984	BSX	M	Y	23 teeth	11/06 ▸	06A121012	**506532**	CR	
2.0 FSi	*1T2/G/H/T*	E	1984	BVY,BVZ	M	Y		11/06 ▸ 01/07	06B121011HX	**506790**	CR	
2.0 FSi	*1THT, 1T2/G/H/T*	E	1984	BVY,BVZ	A	Y		11/06 ▸ 01/07	06B121011HX	**506790**	CR	
1.9 TDi	*1T2/A/C/H/T*	D	1896	BXE, BLS, BXF, BXJ	M	Y		11/06 ▸	045121011H	**506700**	CR	
1.9 TDi	*1T2/A/C/H/T*	D	1896	BLS	A	Y		11/06 ▸	045121011H	**506700**	CR	
2.0 TDi	*1T2/A/H/T*	D	1968	BMM	M	Y		11/06 ▸	038121011J	**506872**	CR	
2.0 TDi	*1T2/A/H/T*	D	1968	BKD, AZV, BMN	M	Y		11/06 ▸	03G121011	**506699**	CR	
2.0 TDi	*1T2/A/H/T*	D	1968	BMM	A	Y		11/06 ▸	038121011J	**506872**	CR	
2.0 TDi	*1T2/A/H/T*	D	1968	BMN, BKD	A	Y		11/06 ▸	03G121011	**506699**	CR	
Touran (2010>)												
1.6 TDI 16V	*1T3/2/3/4/C*	D	1598	CAYB,CAYC	M	Y	19 teeth	05/10 ▸	03L121011	▲**506974**	CR	
1.6 TDI 16V	*1T3/2/3/4/C*	D	1598	CAYC	A	Y	19 teeth	05/10 ▸	03L121011	▲**506974**	CR	
2.0 TDI 16V	*1T3/2/3/4/C*	D	1968	CFHC,CLCA	M	Y	19 teeth	05/10 ▸	03L121011X	▲**506974**	CR	
1.6 TDI 16V,2.0 TDI 16V	*1T3/2/3/4/C*	D	1968	CFHC,CLCA	A	Y	19 teeth	05/10 ▸	03L121011	▲**506974**	CR	
Vento												
1.4 i	*1H2/2/3/B*	E	1390	AEX	M	Y		07/95 ▸ 12/97	030121008D	**506385**	CR	
1.4 i	*1H2/2/3*	E	1391	ABD	M	Y		11/91 ▸ 07/95	030121005LX	**506282**	CR	
1.6 i	*1H2/2/3*	E	1598	ABU	M	Y		07/92 ▸ 09/94	030121005LX	**506282**	CR	
1.6 i	*1H2/2/3/4/5/B*	E	1598	AFT, AEK, AKS	M	Y		10/94 ▸ 12/97	037121010C	**506667**	N	506666
1.6 i	*1H2/2/3*	E	1598	AEE, AEA	M	Y		10/94 ▸ 12/97	030121008D	**506385**	CR	
1.6 i	*1H2/2/3/4/B*	E	1598	AEK, AFT	A	Y		10/94 ▸ 12/97	037121010C	**506667**	N	506666
1.8 i	*1H33, 1H2/2/3/4/5*	E	1781	ADZ, ABS, AAM	M	Y		11/91 ▸ 12/97	037121010C	**506667**	N	506666
1.8 i	*1H2/2/3/4*	E	1781	ADZ, AAM, ABS	A	Y		01/92 ▸ 12/97	037121010C	**506667**	N	506666
2.0 E	*1H2/2/3/4/5*	E	1984	ADY, AGG, AKR, 2E, AEP	M	Y		11/91 ▸ 12/97	037121010C	**506667**	N	506666
2.0 E	*1H2/2/3/4*	E	1984	AGG, ADY, 2E, AEP	A	Y		11/91 ▸ 12/97	037121010C	**506667**	N	506666
2.8 i VR6	*1H2/5/7*	E	2792	AAA	M	Y1		01/92 ▸ 12/97	021121004X	**506484**	N	
2.8 i,2.8 i VR6	*1H2/5/7*	E	2792	AAA	A	Y		07/92 ▸ 12/97	021121004X	**506484**	N	
1.9 D,1.9 SDi,1.9 TD 1.9 TDi	*1H2/2/3/4/5/B*	D	1896	1Y, AAZ, 1Z, AEY, AHU, AFN ALE	M	Y		11/91 ▸ 12/97	037121010C	**506667**	N	506666
1.9 TD,1.9 TDi	*1H2/2/3/4/B*	D	1896	1Z, AHU, AAZ, AFN	A	Y		01/92 ▸ 12/97	037121010C	**506667**	N	506666
VOLKSWAGEN												
Caddy (82>92)												
1.5	*147/0/7/8/9, 148/0/7/8/9*	E	1457	JB	M	Y		08/82 ▸ 07/83	037121010C	**506667**	N	506666

• **New** Nouveau **Nuevo** Novo **Nuovo** Nieuw **Neu** Yeni Новый Nou

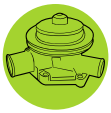

VOLKSWAGEN (.../...)

Caddy (82>92) (.../...)

1.6	147/0/7/8/9	E	1588	EM	M	Y		08/82 ▸ 07/83	037121010C	506667	N	506666
1.6	147/0/7/8/9	E	1588	EM	A	Y		08/82 ▸ 07/83	037121010C	506667	N	506666
1.6	147/0/7/8/9, 1AE1, 148/0/7/8/9	E	1595	EW, HN	M	Y		08/83 ▸ 07/92	037121010C	506667	N	506666
1.6	147/0/7/8, 1AE1, 148/0/7/8	E	1595	EW, HN	A	Y		08/83 ▸ 07/92	037121010C	506667	N	506666
1.8 i	147/0/7/8, 1AE1, 148/0/7/8	E	1781	JH	M	Y		08/85 ▸ 07/92	037121010C	506667	N	506666
1.8 i	147/0/7/8, 1AE1, 148/0/7/8	E	1781	JH	A	Y		08/85 ▸ 07/92	037121010C	506667	N	506666
1.6 D	147/0/7/8/9, 1AE1, 148/0/7/8/9	D	1588	JK, ME	M	Y		08/82 ▸ 07/92	037121010C	506667	N	506666

Caddy (95>2004)

1.4 i 16V	9K9/A/B	E	1390	AUA	M	Y		09/00 ▸ 06/03	036121005S	506576	CR	
1.4 i	9K9/A/B	E	1390	AUD	M	Y		09/00 ▸ 06/03	030121008C	506577	CR	
1.4 i	9K9/A/B	E	1390	AEX, APQ, AKV	M	Y		11/95 ▸	030121008D	506385	CR	
1.6 i	9K9/A/B	E	1595	1F	M	Y		11/95 ▸ 05/97	037121010C	506667	N	506666
1.6 i	9U71, 9K9/A/B	E	1598	AEE	M	Y		06/96 ▸	030121008D	506385	CR	
1.7 SDi	9K9/A/B	D	1716	AHB	M	Y		07/96 ▸	037121010C	506667	N	506666
1.9 SDi,1.9 TDi	9K9/A/B	D	1896	AYQ, ALH	M	Y		09/00 ▸ 06/03	038121011A	506533	CR	
1.9 D,1.9 SDi,1.9 TDi	9K9/A/B	D	1896	AHU, ALE, 1Z, AEY, 1Y	M	Y		11/95 ▸	037121010C	506667	N	506666
1.9 D	9U71	D	1896	AEF	M	Y		06/96 ▸	030121008D	506385	CR	
1.9 D	9U71	D	1896	AEF	M	Y		06/96 ▸ 12/00	028121004	506513	N	

Caddy (2004>2010)

1.4 i 16V	2KA/A/B, 2KB/C/D	E	1390	BCA	M	Y		02/04 ▸	036121005S	506576	CR	
1.9 TDi	2KA/A/B, 2KB/C/D	D	1896	BJB, BSU, BLS	M	Y		02/04 ▸	045121011F	506700	CR	
1.9 TDi	2KAA	D	1896	BJB	M	Y		02/04 ▸	036121005S	506576	CR	
1.9 TDi	2KA/A/B, 2KB/C/D	D	1896	BLS	A	Y		06/05 ▸	045121011F	506700	CR	
2.0 SDi	2KA/A/B, 2KB/C/D	D	1968	BST, BDJ	M	Y		02/04 ▸	045121011F	506700	CR	

Caddy (2010>)

1.6 TDI 102 16V 1.6 TDI 75 16V	2CBC, 2CHA, 2CJC, 2CA/A	D	1598	CAYD,CAYE	M	Y	19 teeth	08/10 ▸	03L121011X	▲506974	CR	
1.6 TDI 16V	2CBC, 2CHA, 2CJC, 2CA/A	D	1598	CAYD	A	Y	19 teeth	08/10 ▸	03L121011	▲506974	CR	
2.0 TDI 16V	2CBC, 2CHA, 2CJC, 2CA/A	D	1968	CFHC,CFHE,CFHF,CLCA	M	Y	19 teeth	08/10 ▸	03L121011	▲506974	CR	
2.0 TDI 16V	2CBC, 2CHA, 2CJC, 2CA/A	D	1968	CFHC	A	Y	19 teeth	11/10 ▸	03L121011	▲506974	CR	

LT I (75>96)

2.5,2.5 i 70-N-014 001 ▸	70A/1, 70B/1/C/K/M/T 70E1, 70H1, 70C/2/3, 70J 1/C/K/M/T/W, 70L1, 70M1 70K/2/3/K	E	2460	AAF,ACU,AEN	M	Y	20 teeth	09/90 ▸ 05/96	074121005MX	▲506920	CR	
2.5	70A/1, 70B/1/C/K/M/T, 70E1, 70H1 70C/2/3, 70J/1/C/K/M/T/W, 70L1 70M1, 70K/2/3	E	2460	AAF,ACU	A	Y	20 teeth	10/91 ▸ 12/95	074121005M	▲506920	CR	
2.4 D,2.4 TD	281/0/5/G/K, 283/5/6, 291 1/2/5/6, 293/4/E, 295/0/1 4/Q/Z, 296/8/9	D	2383	CP, 1S, DV, 1G, DW	M	Y		01/79 ▸ 08/92	069121004X	506105	CR	
2.4 D,2.4 TD	21D4, 21A/0/1, 21G3, 21F 6/7, 21K/7/8	D	2383	ACT, ACL	M	Y	20 teeth	08/92 ▸ 12/95	074121005N	▲506920	CR	
2.4 D,2.4 TD		D	2383	DW, DV		Y		08/85 ▸ 07/91	069121004X	506105	CR	
2.4 D,2.4 TD	21C3, 21A/0/1, 21D/2/4 21G3, 21H4, 21F/3/6/7 21K/7/8	D	2383	ACL,ACT	M	Y	20 teeth	08/92 ▸ 12/95	074121005MX	▲506920	CR	
2.4 D,2.4 TD	21D4, 21A/0/1, 21G3, 21F 6/7, 21K/7/8	D	2383	ACL,ACT	M	Y	20 teeth	08/92 ▸ 12/95	074121005N	▲506920	CR	

LT II (96>2003)

2.3 i	2DA/0/1, 2DB/0/1, 2DC/0/1, 2DD/0/1 2, 2DE/0/1, 2DG1, 2DF/0/1/2, 2DK1 2DH/1/2, 2DL/1/2, 2DM/1/2	E	2295	AGL	M	Y		05/96 ▸	00A121010	506592	N	
2.5 i	7DA/1, 7DB/1/K, 7DE1, 7DH1, 7DC/1/2 3/A/G/M/T/U, 7DJ/1/K, 7DL1, 7DM1 7DK/2/3/J/T/W	E	2460	ACU,AET,AEU,APL,AVT	M	Y	20 teeth	01/96 ▸	074121005N	▲506920	CR	

• **New** Nouveau **Nuevo** Novo **Nuovo** Nieuw **Neu** Yeni Новый Nou

VOLKSWAGEN (.../...)												
LT II (96>2003) (.../...)												
2.5 i	*7DA/1, 7DB/1/K, 7DE1, 7DH1, 7DC/2/3 A/G/M/T/U, 7DJ/1/K, 7DL1, 7DM1, 7DK 2/3/T/W*	E	2460	ACU,AET,AEU,APL,AVT	A	Y	20 teeth	01/96 ▸	074121005N	▲506920	CR	
2.5 SDi,2.5 TDI	*2DA/0/1, 2DB/0/1, 2DC/0/1 2DD/0/1/2, 2DE/0/1, 2DF 0/1/2, 2DG/0/1/2, 2DK1 2DH/1/2, 2DL/1/2, 2DM/1 2*	D	2460	AGX, AHD, ANJ, APA	M	Y	20 teeth	05/96 ▸	074121005N	▲506920	CR	
2.5 TDI	*2DA/0/1, 2DB/0/1, 2DC/0/1 2DD/0/1/2, 2DE/0/1, 2DF 0/1/2, 2DG/0/1/2, 2DK1 2DH/1/2, 2DL/1/2, 2DM/1 2*	D	2461	BBF, BBE, AVR	M	Y	20 teeth	09/00 ▸	074121005N	▲506920	CR	
2.5 TDi	*7DA/1, 7DB/1/K, 7DE1 7DH1, 7DC/2/M/T/U, 7DJ/1 K, 7DL1, 7DM1, 7DK/2/T*	D	2461	AJT,AXG,AYY	M	Y	20 teeth	05/97 ▸	074121005NX	▲506920	CR	
2.8 TD	*2DA/0/1, 2DB/0/1, 2DC/0/1 2DD/0/1/2, 2DE/0/1, 2DF 0/1/2, 2DG/0/1/2, 2DK1 2DH/1/2, 2DL/1/2, 2DM/1 2*	D	2798	ATA, AGK	M	Y		07/96 ▸	062121010	**506877**	G	
2.8 TD,2.8 TDI	*2DA/0/1, 2DB/0/1, 2DC/0/1 2DD/0/1/2, 2DE/0/1, 2DF 0/1/2, 2DG/0/1/2, 2DK1 2DH/1/2, 2DM1, 2DL/1/2*	D	2799	AUH, BCQ	M	Y		02/02 ▸	062121010A	**506877**	G	
LT III (2003>)												
2.5 TDi ▸ 2D-6-020 000	*2DA/0/1, 2DB/0/1, 2DC/0/1 2DD/0/1/2, 2DE/0/1, 2DF 0/1/2, 2DG/0/1/2, 2DK1 2DH/1/2, 2DL/1/2, 2DM/1 2*	D	2460	ANJ	M	Y	20 teeth	06/03 ▸ 12/05	074121005N	▲506920	CR	
2.5 TDi ▸ 2D-6-020 000	*2DA/0/1, 2DB/0/1, 2DC/0/1 2DD/0/1/2, 2DE/0/1, 2DF 0/1/2, 2DG/0/1/2, 2DK1 2DH/1/2, 2DL/1/2, 2DM/1 2*	D	2461	AVR, BBE, BBF	M	Y	20 teeth	06/03 ▸ 12/05	074121005N	▲506920	CR	
2.8 TDi	*2DA/0/1, 2DB/0/1, 2DC/0/1 2DD/0/1/2, 2DE/0/1, 2DF 0/1/2, 2DG/0/1/2, 2DK1 2DH/1/2, 2DL/1/2, 2DM/1 2*	D	2799	AUH, BCQ	M	Y		06/03 ▸	062121010A	**506877**	G	
2.5 TDi	*2DA/0/1, 2DB/0/1, 2DC/0/1 2DD/0/1/2, 2DE/0/1, 2DF 0/1/2, 2DG/0/1/2, 2DK1 2DH/1/2, 2DL/1/2, 2DM/1 2*	D	2461	AVR,BBE,BBF	M	Y	20 teeth	06/03 ▸	074121005MX	▲506920	CR	
Taro												
2.4 i	*7AE/2, 7AG/1/3, 7AX/2/3*	E	2366	22R-EC	M	Y		06/89 ▸ 03/97	J1610039346	**506468**	N	
2.4 D	*7AG1, 7AE/1/2, 7AX/2/3*	D	2446	2L	M	Y		02/89 ▸ 03/97	J1610059257	**506846**	N	
Transporter (F24) (79>92)												
1.9	*245/0/1, 246/0/1, 247/0/3/A, 2510 2520, 248/0/3, 253/0/1/2/3/4/5/9/0 S/T, 254/0/2/3/4/5/9, 255/0/1/2/3/4 5, 256/0/1/2/3/4/5*	E	1915	DF, DG, SP	M	Y		08/82 ▸ 07/92	025121010BX	**506713**	N	
1.9 24-D-074463 ▸	*2460, 245/0/G/H, 247/0/3/G/K, 248/0 3, 251/0/G/H, 252/0/D, 253/0/1/2/3 4/5/G/H/J/K/L/M, 254/0/2/3/5/9/D/F 255/0/1/2/5/G/H/J/K/L/M/N, 256/0/2 E/F*	E	1915	DH	M	Y		03/83 ▸ 07/85	025121010AX	**506428**	N	

• **New** Nouveau **Nuevo** Novo **Nuovo** Nieuw **Neu** Yeni Новый Nou

Valeo

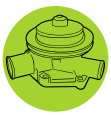

VOLKSWAGEN (.../...)

Transporter (F24) (79>92) (.../...)

1.9	245/0/1, 246/0/1, 247/0/3, 2510 2520, 248/0/3, 253/0/1/2/3/4/5/9 254/0/2/3/5/9, 255/0/1/2/4/5, 256 0/2/3	E	1915	DG	A	Y		08/82 ▸ 07/92	025121010BX	**506713**	N	
1.9 24-D-074463 ▸	2460, 245/0/G/H, 247/0/3/G/K, 248/0 3, 251/0/G, 252/0/D, 253/0/1/2/3/4 5/9/G/H/J/K/L/M, 254/0/2/3/5/9/D/F 255/0/1/2/5/G/H/J/K/L/M/N, 256/0/2 3/E/F	E	1915	DH	A	Y		03/83 ▸ 07/85	025121010AX	**506428**	N	
1.9		E	1915	DF, EY, SP, DG		Y		08/82 ▸ 07/91	025121010BX	**506713**	N	
2.1	245/0, 246/0/F/G, 247/0/3/A/C/G/K 248/0/A/G/K, 251/0/G, 252/0/G, 253 0/1/2/3/4/5/9/F/G/H/J/K/L/M/P/S/T 254/0/3/5/C/D/F/G/L/M, 255/0/1/2/3 4/5/6/F/G/H/J/K/L/M/N, 256/0/2/3/4 5/E/F/G/K/L	E	2109	MV, DJ	M	Y		08/84 ▸ 07/92	025121010CX	**506434**	N	
2.1		E	2109	MV, DJ, SR, SS		Y		08/85 ▸ 09/91	025121010CX	**506434**	N	
1.6 D,1.6 TD	245/0/1, 246/0/1, 247/0/3 A, 2510, 2520, 248/0/3/A 253/0/1/2/3/4/5/7/9/S/T 254/0/2/3/5/9, 255/0/1/2 3/4/5/S/T, 256/0/2/3/4/5	D	1588	CS, JX	M	Y		05/79 ▸ 07/92	037121010C	**506667**	N	506666
1.6 TD	2556	D	1588	JX	A	Y		08/84 ▸ 07/85	037121010C	**506667**	N	506666
1.6 TD		D	1588	JX		Y		08/84 ▸ 07/91	037121010C	**506667**	N	506666
1.8 D	245/0/1, 246/0/1, 247/0/3, 2510 2520, 248/0/3, 253/1/2/3/4/5/9 254/0/2/3/5/6, 255/0/1/2/3/5, 256 0/2/3/5	D	1715	KY	M	Y		08/84 ▸ 07/92	037121010C	**506667**	N	506666
1.8 D		D	1715	KY		Y		10/86 ▸ 07/91	037121010C	**506667**	N	506666

Transporter (F70) (90>96)

1.8	70A/1, 70B/1/C/K/M, 70E1, 70H1, 70C 2/3, 70J/1/C/K/M, 70L1, 70M1, 70K/2 3	E	1781	PD	M	Y		09/90 ▸ 07/92	037121010C	**506667**	N	506666
2.0	70A/1, 70C2, 70E1, 70H1, 70B/1/C/K M, 70J/1/K/M, 70L1, 70M1, 70K/2/3	E	1968	AAC	M	Y		09/90 ▸ 12/95	037121010C	**506667**	N	506666
2.0	70A1, 70BC	E	1968	AAC	A	Y		09/90 ▸ 12/95	037121010C	**506667**	N	506666
2.0 70-N-014 001 ▸	70BK	E	1968	AAC	A	Y	20 teeth	10/91 ▸ 12/93	074121005N	**▲506920**	CR	
2.0 70-N-014 001 ▸	70BK	E	1968	AAC	A	Y	20 teeth	10/91 ▸ 12/93	074121005M	**▲506920**	CR	
2.5	70BC	E	2460	AAF	M	Y		09/90 ▸ 12/94	037121010C	**506667**	N	506666
2.5,2.5 i 70-N-014 001 ▸	70A/1, 70B/1/C/K/M/T 70E1, 70H1, 70C/2/3, 70J 1/C/K/M/T/W, 70L1, 70M1 70K/2/3/K	E	2460	AEN, ACU, AAF	M	Y	20 teeth	10/91 ▸ 05/96	074121005N	**▲506920**	CR	
2.5	70BC	E	2460	AAF	A	Y		09/90 ▸ 12/95	037121010C	**506667**	N	506666
2.5 70-N-041 001 ▸	70A/1, 70B/1/C/K/M/T, 70E1, 70H1 70C/2/3, 70J/1/C/K/M/T/W, 70L1 70M1, 70K/2/3	E	2460	ACU, AAF	A	Y	20 teeth	10/91 ▸ 12/95	074121005N	**▲506920**	CR	
2.5 ▸ 70-N-014 000	70A/1, 70B/1/C/K/M, 70E1, 70H1, 70C 2/3, 70J/1/C/K/M, 70L1, 70M1, 70K/2 3	E	2460	AAF	M	Y		09/90 ▸ 10/91	023121004X	**506388**	CR	
2.5 ▸ 70-N-014 000	70A/1, 70B/C/K/M, 70E1, 70H1, 70C/2 3, 70J/1/C/K/M, 70L1, 70M1, 70K/2/3	E	2460	AAF	A	Y		10/91 ▸ 10/91	023121004X	**506388**	CR	
1.9 D,1.9 TD	70A/1, 70B/1/C/K/M/T 70E1, 70H1, 70C/2/3, 70J 1/C/K/M/T/W, 70L1, 70M1 70K/2/3	D	1896	1X, ABL	M	Y		09/90 ▸ 12/95	037121010C	**506667**	N	506666
2.4 D	70A/1, 70B/1/C/K/M/T, 70E1, 70H1 70C/2/3, 70J/1/C/K/T/W, 70L1, 70M1 70K/2/3/K	D	2370	AAB	M	Y		09/90 ▸ 05/96	023121004X	**506388**	CR	

• **New** Nouveau **Nuevo** Novo **Nuovo** Nieuw **Neu** Yeni Новый Nou

VOLKSWAGEN (.../...)

Transporter (F70) (90>96) (.../...)

2.4 D	70A/1, 70B/1/K/M/T, 70E1, 70H1, 70C 2/3, 70J/1/C/K/M/T/W, 70L1, 70M1 70K/2/3	D	2370	AAB	A	Y		05/92 ▸ 12/95	023121004X	**506388**	CR	
2.5 TDI	70A/1, 70B/1/K/M/T, 70E1 70C/2/3, 70H/1/3, 70K2 70L1, 70M1, 70J/1/K/W	D	2460	ACV	M	Y	20 teeth	09/95 ▸ 12/95	074121005N	▲**506920**	CR	

Transporter (F7D) (96>2003)

2.0 i	7DA/1, 7DB/1/K, 7DE1, 7DH1, 7DC/2/3 A/G/M/T/U, 7DJ/1/K, 7DL1, 7DM1, 7DK 2/3/M/W	E	1968	AAC	M	Y		01/96 ▸	037121010C	**506667**	N	506666
2.5 i	7DA/1, 7DB/1/K, 7DE1, 7DH1, 7DC/2/3 A/G/M/T/U, 7DJ/1/K, 7DL1, 7DM1, 7DK 2/3/T/W	E	2460	AET, ACU, AEU, AVT, APL	A	Y	20 teeth	01/96 ▸	074121005N	▲**506920**	CR	
2.5 i ▸ 70Y075000	7DA/1, 7DB/1/K, 7DE1, 7DH1, 7DC/1/2 3/A/G/M/T/U, 7DJ/1/K, 7DL1, 7DM1 7DK/2/3/J/T/W	E	2460	AET, ACU, AVT, APL, AEU	M	Y	20 teeth	01/96 ▸	074121005N	▲**506920**	CR	
2.8 i VR6	7DA/1, 7DB/1/K, 7DE1 7DH1, 7DC/2/3/A/G/M/T/U 7DJ/1/K, 7DL1, 7DM1, 7DK 2/3/M/T/W	E	2792	AES	M	Y		01/96 ▸	021121004X	**506484**	N	
2.8 i V6 24V	7DB1, 7DA/1, 7DE1, 7DH1 7DJ1, 7DC/2/M/T/U, 7DL1 7DK/2/T	E	2792	AMV	A	Y		05/00 ▸ 06/03	022121011	**506798**	N	
2.8 i V6 24V	7DJ1	E	2792	AMV	A	Y		01/96 ▸	037121010A	**506667**	N	506666
2.8 i V6 24V,2.8 i VR6	7DA/1, 7DB/1/K, 7DE1 7DH1, 7DC/2/3/A/G/M/T/U 7DJ/1/K, 7DL1, 7DM1, 7DK 2/3/M/T/W	E	2792	AES, AMV	A	Y		01/96 ▸	021121004X	**506484**	N	
1.9 TD	7DA/1, 7DB/1/K, 7DE1 7DH1, 7DC/2/3/A/G/M/T/U 7DJ/1/K, 7DL1, 7DM1, 7DK 2/3/M/T/W	D	1896	ABL	M	Y		01/96 ▸	037121010C	**506667**	N	506666
2.4 D	7DA/1, 7DB/1/K, 7DE1, 7DH1, 7DC/2/3 A/G/M/T/U, 7DJ/1/K, 7DL1, 7DM1, 7DK 2/3/T/W	D	2370	AAB, AJA	M	Y	20 teeth	01/96 ▸	074121005N	▲**506920**	CR	
2.4 D	7DA/1, 7DB/1/K, 7DE1, 7DH1, 7DC/2/3 A/G/M/T/U, 7DJ/1/K, 7DL1, 7DM1, 7DK 2/3/T/W	D	2370	AAB, AJA	A	Y	20 teeth	01/96 ▸	074121005N	▲**506920**	CR	
2.4 D	70A/1, 70B/1/C/K/M/T, 70E1, 70H1 70C/2/3, 70J/1/C/K/T/W, 70L1, 70M1 70K/2/3/K	D	2370	AAB,AJA	M	Y	20 teeth	09/90 ▸ 05/96	074121005MX	▲**506920**	CR	
2.4 D	7DA/1, 7DB/1/K, 7DE1, 7DH1, 7DC/2/3 A/G/M/T/U, 7DJ/1/K, 7DL1, 7DM1, 7DK 2/3/T/W	D	2370	AAB,AJA	A	Y	20 teeth	01/96 ▸ 06/03	074121005M	▲**506920**	CR	
2.5 TDi	7DA/1, 7DB/1/K, 7DE1 7DH1, 7DC/1/2/3/G/M/T/U 7DJ/1/K, 7DL1, 7DM1, 7DK 2/T/W	D	2460	ACV, AHY, AXL, AYC	M	Y	20 teeth	01/96 ▸	074121005N	▲**506920**	CR	
2.5 DTi,2.5 TDi	7DA/1, 7DB/1/K, 7DE1 7DH1, 7DC/2/M/T/U, 7DJ/1 K, 7DL1, 7DM1, 7DK/2/T	D	2460	ACV, AXL, AYC, AUF	A	Y	20 teeth	01/96 ▸	074121005N	▲**506920**	CR	
2.5 TDi	7DJ1	D	2460	ACV	A	Y		01/96 ▸	037121010C	**506667**	N	506666
2.5 TDi	7DA/1, 7DB/1/K, 7DE1 7DH1, 7DC/2/M/T/U, 7DJ/1 K, 7DL1, 7DM1, 7DK/2/T	D	2461	AYY, AJT, AXG	M	Y	20 teeth	05/97 ▸	074121005N	▲**506920**	CR	

Transporter (7J/7H) (2003>)

2.0 i	7HA/1, 7HB/1/S/X, 7HH1, 7HC/T/W 7HJ/1/S, 7JD1, 7JE1, 7JL1, 7HM/B/C H	E	1984	AXA	M	Y	23 teeth	06/03 ▸	06A121011TX	**506532**	CR	

• **New** Nouveau **Nuevo** Novo **Nuovo** Nieuw **Neu** Yeni Новый Nou

Valeo

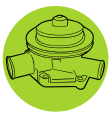

		Type Ctr.		cc					OE	Valeo		
VOLKSWAGEN (.../...)												
Transporter (7J/7H) (2003>) (.../...)												
3.2 i V6 24V	*7HA/1, 7HH1, 7HB/1/S, 7HJ 1/S, 7JD1, 7JE1, 7JL1 7HM/B/C/H*	E	3189	BDL, BKK	M	Y		02/04 ▸	022121011	**506798**	N	
3.2 i 24V,3.2 i V6 24V	*7HA/1, 7HB/1/S/X, 7HH1 7HC/T/W, 7HJ/1/S, 7JD1 7JE1, 7JL1, 7HM/B/C/H/Y*	E	3189	BKK, BDL	A	Y		05/03 ▸	022121011	**506798**	N	
1.9 TDI	*7HA/1, 7HB/1/S/X, 7HC/T/W 7HH1, 7HF/D/E, 7HJ/1/S/X 7JD1, 7JE1, 7JL1, 7JZ1 7HM/B/C/H*	D	1896	BRS, BRR, AXB, AXC	M	Y		04/03 ▸	045121011H	**506700**	CR	
Transporter (7J/7H)(2003>)												
2.5 TDI	*7HA/1, 7HB/1/M/S/X, 7HC/T W, 7HH1, 7HF/D/E, 7HJ/1/S X, 7JD1, 7JE1, 7JL1, 7JY1 7JZ1, 7HM/B/C/H/Y*	D	2460	AXD,AXE,BLJ,BNZ,BPC	M	Y		04/03 ▸ 11/09	070121011DX	**506726**	N	
2.5 TDI	*7HA/1, 7HB/1/S/X, 7HC/T/W 7HH1, 7HF/D/E, 7HJ/1/S/X 7JD1, 7JE1, 7JL1, 7JY1 7JZ1, 7HM/B/C/H/Y*	D	2460	AXD,AXE,BNZ,BPC	A	Y		04/03 ▸ 11/09	070121011DX	**506726**	N	
VOLVO												
240-260												
2.0	*244233, 244243, 245243, 244231 244242, 245242*	E	1986	B200K, B200E	M	Y		09/82 ▸ 07/92	2719755	**506044**	N	
2.0	*244-21*	E	1986	B19A	A	Y		03/79 ▸ 08/82	2706810	**506026**	N	
2.0	*244-24*	E	1986	B200E	A	Y		03/79 ▸ 08/82	2719755	**506044**	N	
2.0	*245-4*	E	1986	B200E	A	Y		07/79 ▸ 08/82	2719755	**506044**	N	
2.0	*244247*	E	1986	B200E	A	Y		09/82 ▸ 06/83	2719755	**506044**	N	
2.0	*244-21*	E	1986	B19A		Y		03/79 ▸ 08/82	2706810	**506026**	N	
2.0	*244-4, 244-24*	E	1986	B200E		Y		03/79 ▸ 08/82	2719755	**506044**	N	
2.0	*245-21*	E	1986	B19K		Y		07/81 ▸ 08/82	2706810	**506026**	N	
2.0	*245-24*	E	1986	B200E		Y		07/81 ▸ 08/82	2719755	**506044**	N	
2.1 Turbo	*245462*	E	2127	B21ET	M	Y		09/82 ▸ 06/85	2719755	**506044**	N	
2.1 Turbo	*245-*	E	2127	B21ET		Y		07/81 ▸ 08/82	2706810	**506026**	N	
2.3	*245883, 245843, 244883, 245842 244842, 244843*	E	2316	B230F, B230E, B23E	M	Y		09/82 ▸	2719755	**506044**	N	
2.3	*245847*	E	2316	B23E	A	Y		09/82 ▸ 06/84	2719755	**506044**	N	
2.3	*244*	E	2316	B23A		Y		07/79 ▸ 06/80	2706810	**506026**	N	
2.4 D	*244773, 245773, 245772, 244772*	D	2383	D24	M	Y		09/82 ▸	12571857	**506105**	CR	
2.4 D	*244-77*	D	2383	D24	A	Y		03/79 ▸ 08/82	12571857	**506105**	CR	
2.4 D	*245-77*	D	2383	D24	A	Y		07/79 ▸ 08/82	12571857	**506105**	CR	
2.4 D	*244778*	D	2383	D24	A	Y		09/82 ▸ 06/83	12571857	**506105**	CR	
2.4 D	*244-77*	D	2383	D24		Y		03/79 ▸ 08/82	12571857	**506105**	CR	
2.4 D D6	*245-77*	D	2383	D24		Y		07/79 ▸ 08/82	12571857	**506105**	CR	
340-360												
1.4	*343533, 345523, 345531, 345521 343523, 345533, 344533, 343531 343521*	E	1397	B14-40, B14-4E, B14-4S	M	Y		09/82 ▸	32873358	**506043**	N	
1.4	*345500*	E	1397	B14	A	Y		1982 ▸ 08/82	32873358	**506043**	N	
1.4	*343500*	E	1397	B14	A	Y		1982 ▸ 08/82	32873358	**506043**	N	
1.4	*343500*	E	1397	B14	A	Y		02/76 ▸ 1982	32674392	**506041**	N	
1.4	*345500*	E	1397	B14	A	Y		08/79 ▸ 1982	32674392	**506041**	N	
1.4	*345520, 343520, 343530, 345530 344530*	E	1397	B14-4E, B14-40	A	Y		09/82 ▸	32873358	**506043**	N	
1.4	*343501*	E	1397	B14		Y		1982 ▸ 08/82	32873358	**506043**	N	
1.4	*345501*	E	1397	B14		Y		1982 ▸ 08/82	32873358	**506043**	N	
1.4	*345501*	E	1397	B14		Y		08/79 ▸ 1982	32674392	**506041**	N	
1.4	*343501*	E	1397	B14		Y		08/79 ▸ 1982	32674392	**506041**	N	
2.0	*343211*	E	1986	B19A	M	Y		08/80 ▸ 08/82	2706810	**506026**	N	

• **New** Nouveau **Nuevo** Novo **Nuovo** Nieuw **Neu** Yeni Новый Nou

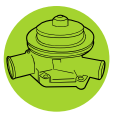

Valeo

Water pump
Pompe à eau
Bomba de água
Bomba de água
Pompa acqua
Waterpomp

Wasserpumpen
Pompa wodna
Vízpumpa
Su pompasi
ВОДЯНОЙ НАСОС

Vodní pumpa
Pompa de apă

Type Ctr.		cc						OE	Valeo		
VOLVO (.../...)											
340-360 (.../...)											
1.9	*345211*	E	1986	B19A	M	Y		08/80 ▸ 08/82	2706810	**506026**	N
2.0	*344243, 345243, 344213, 344283 345283, 344233, 343243, 345233 345213*	E	1986	B200E, B19E, B200K	M	Y		09/82 ▸	13360292	**506050**	N
2.0	*343213*	E	1986	B19A	M	Y		09/82 ▸ 06/84	4634259	**506026**	N
2.0	*344213*	E	1986	B200K	M	Y		07/84 ▸	13360292	**506050**	N
2.0	*344210*	E	1986	B200K	A	Y		07/85 ▸	13360292	**506050**	N
1.6 D	*344723*	D	1595	D16	M	Y		07/84 ▸	33456260	**506019**	N
1.6 D	*344723, 345723, 343723*	D	1595	D16	M	Y		08/84 ▸	33456260	**506019**	N
440-460-480											
1.6 i	*KX173E*	E	1596	B16F	M	Y		10/91 ▸ 06/97	33456260	**506019**	N
1.6	*LX173E*	E	1596	B16F	M	Y		10/92 ▸ 06/97	33456260	**506019**	N
1.7,1.7 i Turbo	*EX183E, EX053E, EX193E EX063E, EX173E, EX143E EX083E*	E	1721	B18F, B18ED, B18FT, B18FTM B18FP, B18E, B18EP	M	Y		07/86 ▸	33456260	**506019**	N
1.7 i,1.7 i Turbo	*KX193E, KX063E, KX143E KX183E*	E	1721	B18FT, B18FTM, B18EP, B18FP	M	Y		10/88 ▸ 06/95	33456260	**506019**	N
1.7 i,1.7 i Turbo	*LX143E, LX183E, LX063E*	E	1721	B18EP, B18FP, B18FTM	M	Y		01/90 ▸ 1992	33456260	**506019**	N
1.7,1.7 i Turbo	*EX065E, EX145E, EX085E*	E	1721	B18FTM, B18E, B18EP	A	Y		07/86 ▸	33456260	**506019**	N
1.7 i	*KX185E, KX145E*	E	1721	B18FP, B18EP	A	Y		10/88 ▸ 1992	33456260	**506019**	N
1.7 i	*LX145E, LX185E*	E	1721	B18EP, B18FP	A	Y		01/90 ▸ 1992	33456260	**506019**	N
1.7	*KX013E, KX023E*	E	1783	B18K, B18KP	M	Y		10/88 ▸ 1992	33456260	**506019**	N
1.7	*LX023E*	E	1783	B18KP	M	Y		01/90 ▸ 1992	33456260	**506019**	N
1.8 i	*LX163E*	E	1794	B18U	M	Y		10/91 ▸ 06/95	33456260	**506019**	N
1.8 i	*KX153E, KX163E*	E	1794	B18U-200, B18U	M	Y		10/91 ▸ 06/97	33456260	**506019**	N
1.8 i	*KX156E, KX166E*	E	1794	B18U-200, B18U	A	Y		08/94 ▸ 06/97	33456260	**506019**	N
2.0	*EX313E*	E	1998	B20F	M	Y		10/92 ▸	33456260	**506019**	N
2.0 i	*KX313E*	E	1998	B20F	M	Y		10/92 ▸ 06/97	33456260	**506019**	N
2.0	*LX313E*	E	1998	B20F	M	Y		07/93 ▸ 06/97	33456260	**506019**	N
2.0	*EX315E*	E	1998	B20F	A	Y		10/92 ▸	33456260	**506019**	N
2.0 i	*KX315E*	E	1998	B20F	A	Y		10/92 ▸ 06/97	33456260	**506019**	N
2.0	*LX315E*	E	1998	B20F	A	Y		07/93 ▸ 06/97	33456260	**506019**	N
1.9 TD	*KX793E, KX703E*	D	1870	D19T, D19TEGR	M	Y		07/94 ▸ 06/97	33456260	**506019**	N
1.9 TD	*LX703E, LX793E*	D	1870	D19TEGR, D19T	M	Y		07/94 ▸ 06/97	33456260	**506019**	N
740-760-780											
2.0,2.0 Turbo	*704262, 744262, 744233*	E	1986	B200ET, B200K	M	Y		07/84 ▸ 07/88	2706810	**506026**	N
2.0,2.0 16V,2.0 Turbo 2.0 Turbo 16V 2.0 Turbo Intercooler	*745252, 744293, 744203 744282, 745273, 744233 745293, 744262, 704243 745262, 745243, 744252 745203, 745233, 745282 744273, 704262, 744243*	E	1986	B204FT, B204E, B200G, B204GT B200F, B200K, B200ET, B200E B200FT	M	Y		07/84 ▸ 08/94	2719755	**506044**	N
2.0 Turbo	*782262*	E	1986	B200ET	M	Y		03/85 ▸ 07/89	2719755	**506044**	N
2.0	*744247, 745277, 744237, 745247 744277, 745237, 704247*	E	1986	B200E, B200F, B200K	A	Y		07/84 ▸ 07/91	2719755	**506044**	N
2.0	*744237*	E	1986	B200K	A	Y		07/84 ▸ 07/88	2706810	**506026**	N
2.3 Turbo 2.3 Turbo Intercooler	*764872, 764862, 704862*	E	2316	B230FT, B230ET	M	Y		07/83 ▸ 1990	2719755	**506044**	N
2.3,2.3 16V,2.3 Turbo 2.3 Turbo Intercooler	*745833, 744872, 745862 704842, 745872, 744892 745842, 744862, 744813 745802, 745853, 745892 744883, 745883, 744833 744822, 745813, 745822 744842, 744853, 744802*	E	2316	B230K, B230FTX, B230ET B230FT, B230E, B234F, B230A B230G, B230FB, B230F, B230GT	M	Y		07/84 ▸ 08/94	2719755	**506044**	N
2.3 Turbo 2.3 Turbo Intercooler	*744872, 744862*	E	2316	B230FT, B230ET	M	Y		08/84 ▸ 07/88	2706810	**506026**	N
2.3 Turbo 2.3 Turbo Intercooler	*704865, 764865*	E	2316	B230ET	A	Y		07/83 ▸ 1988	2719755	**506044**	N
2.3	*744855, 745855, 745886, 744845 744886, 745845, 704845*	E	2316	B230FB, B230F, B230E	A	Y		07/84 ▸ 08/94	2719755	**506044**	N

• **New** Nouveau **Nuevo** Novo **Nuovo** Nieuw **Neu** Yeni Новый Nou

Valeo

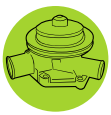

VOLVO (.../...)

740-760-780 (.../...)

2.3 Turbo Intercooler	*764876*	E	2316	B230FT		Y		07/88 ▸ 1990	2719755	**506044**	N	
2.4 TD,2.4 TD Intercooler	*764762, 764752, 765752 704762*	D	2383	D24T, D24TIC, D24T-109	M	Y		02/82 ▸ 1990	12571857	**506105**	CR	
2.4 D,2.4 TD	*744762, 745773, 744752 704773, 745752, 745762 744773*	D	2383	D24T, D24, D24TIC	M	Y		07/84 ▸ 08/94	12571857	**506105**	CR	
2.4 TD Intercooler	*782752*	D	2383	D24TICEGR	M	Y		03/85 ▸ 07/91	12571857	**506105**	CR	
2.4 TD,2.4 TD Intercooler	*704765, 764765, 764755*	D	2383	D24T-109, D24T, D24TIC	A	Y		02/82 ▸ 1990	12571857	**506105**	CR	
2.4 TD	*744755, 745755, 745765 744765*	D	2383	D24TIC, D24T	A	Y		07/85 ▸ 08/94	12571857	**506105**	CR	

850

2.0 10V,2.0 20V 2.0 Turbo 20V	*LS4122, LW4122, LS4502 LS4702, LW4502, LW4702*	E	1984	B5202FS, B5204FS, B5204T2	M	Y		▸ 12/96	30684432	**506325**	CR	
2.0 10V,2.0 20V 2.0 Turbo 20V	*LS4502, LS4122, LW4122 LW4502, LW4702, LS4702*	E	1984	B5204FS, B5202FS, B5204T2	M	Y		06/91 ▸	30684432	**506325**	CR	
2.0 10V,2.0 20V 2.0 Turbo 20V	*LW4706, LS4126, LW4126 LS4506, LW4506, LS4706*	E	1984	B5204T2, B5202FS, B5204FS	A	Y		▸ 12/96	30684432	**506325**	CR	
2.0 10V,2.0 20V 2.0 Turbo 20V	*LS4126, LW4126, LW4506 LS4506, LS4706, LW4706*	E	1984	B5202FS, B5204FS, B5204T2	A	Y		12/92 ▸	30684432	**506325**	CR	
2.3 Turbo,2.3 Turbo 20V	*LS5702, LS5802, LW5802 LW5702*	E	2318	B5234T, B5234T5	M	Y		▸ 12/96	30684432	**506325**	CR	
2.3 Turbo,2.3 Turbo 20V	*LW5802, LW5702, LS5802 LS5702*	E	2318	B5234T5, B5234T	M	Y		03/93 ▸	30684432	**506325**	CR	
2.3 Turbo,2.3 Turbo 20V	*LW5706, LS5806, LW5806 LS5706*	E	2318	B5234T, B5234T5	A	Y		▸ 12/96	30684432	**506325**	CR	
2.3 Turbo,2.3 Turbo 20V	*LW5806, LS5706, LW5706 LS5806*	E	2318	B5234T5, B5234T	A	Y		03/93 ▸	30684432	**506325**	CR	
2.5 10V,2.5 20V 2.5 i Turbo 20V	*LW5102, LW5502, LS5102 LW5602, LS5502*	E	2435	B5252FS, B5254FS, B5254T	M	Y		▸ 12/96	30684432	**506325**	CR	
2.5 10V,2.5 20V 2.5 i Turbo 20V	*LS5102, LW5602, LW5102 LW5502, LS5602*	E	2435	B5252FS, B5254T, B5254FS	M	Y		06/91 ▸	30684432	**506325**	CR	
2.5 10V,2.5 20V	*LW5506, LW5106, LS5606 LS5106*	E	2435	B5254FS, B5252FS	A	Y		▸ 12/96	30684432	**506325**	CR	
2.5 10V,2.5 20V	*LS5106, LW5106, LW5506 LS5506*	E	2435	B5252FS, B5254FS	A	Y		06/91 ▸	30684432	**506325**	CR	
2.5 TDi 10V	*LS7202, LW7202*	D	2461	D5252T	M	Y	18 teeth	02/96 ▸ 12/96	2717684	**506488**	CR	

940-960

2.0,2.0 16V,2.0 Turbo 2.0 Turbo 16V	*944212, 945273, 944252 945243, 945292, 945212 945203, 944243, 944203 944272, 944292, 945252*	E	1986	B200FT, B200F, B204FT, B200E B204E, B200G	M	Y		09/90 ▸	2719755	**506044**	N	
2.0 Turbo,2.0 Turbo 16V	*965212, 964252, 965252 964212*	E	1986	B200FT, B204FT	M	Y		09/90 ▸ 08/96	2719755	**506044**	N	
2.0	*945277, 944277, 945247, 944247 945207, 944207*	E	1986	B200F, B200E, B200G	A	Y		09/90 ▸ 08/94	2719755	**506044**	N	
2.3 Turbo	*964822, 965843, 965872 965822, 964872, 964843*	E	2316	B230GT, B230GK, B230FT	M	Y		09/90 ▸ 08/96	2719755	**506044**	N	
2.3,2.3 16V,2.3 Turbo	*944892, 944853, 944843 944802, 945853, 945872 944813, 945811, 944811 944833, 945802, 944872 945892, 945843, 944812 945812, 945833*	E	2316	B234F, B230FB, B230GK, B230G B230FT, B230FK, B230FD B234G	M	Y		09/90 ▸	2719755	**506044**	N	
2.3 Turbo	*965875, 965825, 964825 964875*	E	2316	B230FT, B230GT	A	Y		09/90 ▸ 08/96	2719755	**506044**	N	
2.3,2.3 Turbo	*945805, 945845, 945855 944845, 945816, 944855 944805, 945836, 944816 944836*	E	2316	B230G, B230GK, B230FB, B230FK B230FD	A	Y		09/90 ▸	2719755	**506044**	N	
2.5	*964991, 965931, 964931, 965991*	E	2473	B6254G, B6254F	M	Y		09/94 ▸ 01/97	2719862	**506325**	CR	
2.5	*965991, 964991, 965931, 964931*	E	2473	B6254G, B6254F	M	Y		09/94 ▸	30684432	**506325**	CR	

• **New** Nouveau **Nuevo** Novo **Nuovo** Nieuw **Neu** Yeni Новый Nou

		Type Ctr.	cc					OE	Valeo			
VOLVO (.../...)												
940-960 (.../...)												
2.5	*964936, 965936, 965996, 964996*	E	2473	B6254F, B6254G	A	Y		09/94 ▸ 01/97	2719862	**506325**	CR	
2.5	*964936, 965996, 964996, 965936*	E	2473	B6254F, B6254G	A	Y		09/94 ▸	30684432	**506325**	CR	
3.0 24V	*965956, 964956, 965986 964986*	E	2922	B6304F, B6304G	A	Y		09/90 ▸	30684432	**506325**	CR	
3.0 24V	*964986, 965956, 964956 965986*	E	2922	B6304G, B6304F	A	Y		09/90 ▸ 01/97	272474	**506325**	CR	
2.4 TD	*944752, 945752, 944763 945762, 944762*	D	2383	D24TIC, D24T	M	Y		09/90 ▸ 07/93	12571857	**506105**	CR	
2.4 TD	*964752, 965752*	D	2383	D24TIC	M	Y		09/90 ▸ 08/93	12571857	**506105**	CR	
2.4 TD	*945741, 944741, 945753 944742, 944753, 945752 944752, 945742*	D	2383	D24TICEGR, D24TIC	M	Y	18 teeth	09/90 ▸	2717684	**506488**	CR	
2.4 TD	*964742, 964752, 965742 965752*	D	2383	D24TICEGR, D24TIC	M	Y	18 teeth	09/90 ▸ 08/96	2717684	**506488**	CR	
2.4 TD	*965755, 964755*	D	2383	D24TIC	A	Y		09/90 ▸ 08/93	12571857	**506105**	CR	
2.4 TD	*945763, 944765, 944755 945755*	D	2383	D24T, D24TIC	A	Y		09/90 ▸ 07/93	12571857	**506105**	CR	
2.4 TD	*944745, 945745, 945755 944755*	D	2383	D24TICEGR, D24TIC	A	Y	18 teeth	09/90 ▸	2717684	**506488**	CR	
2.4 TD	*964755, 965745, 965755 964745*	D	2383	D24TIC, D24TICEGR	A	Y	18 teeth	09/90 ▸ 08/96	2717684	**506488**	CR	
C30												
1.8 i Flexifuel 16V		F	1798	B4184S8	M	Y		10/06 ▸	30777590	**506694**	N	
1.8 i 16V		E	1798	B4184S11	M	Y		10/06 ▸	30777590	**506694**	N	
2.0 i 16V		E	1999	B4204S3	M	Y		10/06 ▸	30777590	**506694**	N	
2.0 i 16V		E	1999	B4204S3	A	Y		10/06 ▸	30777590	**506694**	N	
2.0 D Turbo 16V		D	1998	D4204T	M	Y		10/06 ▸	8653806	**506719**	CR	
S40 (95>2004)												
1.6 i 16V	*VS1113*	E	1587	B4164S	M	Y		01/97 ▸	30684432	**506325**	CR	
1.6 i 16V	*VS1113*	E	1587	B4164S	M	Y		01/97 ▸	30684432	**506325**	CR	
1.8 i 16V	*VS1213*	E	1731	B4184S	M	Y		10/95 ▸ 08/99	30684432	**506325**	CR	
1.8 i 16V	*VS1213*	E	1731	B4184S	M	Y		10/95 ▸ 08/99	30684432	**506325**	CR	
1.8 i 16V	*VS1216*	E	1731	B4184S	A	Y		10/95 ▸ 08/99	30684432	**506325**	CR	
1.8 i 16V	*VS1216*	E	1731	B4184S	A	Y		10/95 ▸ 08/99	30684432	**506325**	CR	
1.8 i 16V	*VS*	E	1834	B4184SM	M	Y		03/98 ▸ 03/04	30874316	**506835**	CR	
1.8 i 16V	*VS*	E	1834	B4184SM	A	Y		03/98 ▸ 03/04	30874316	**506835**	CR	
2.0 i 16V	*VS1613*	E	1948	B4204S	M	Y		10/95 ▸	30684432	**506325**	CR	
2.0 i 16V	*VS1613*	E	1948	B4204S	M	Y		10/95 ▸	30684432	**506325**	CR	
2.0 i 16V	*VS1616*	E	1948	B4204S	A	Y		10/95 ▸	30684432	**506325**	CR	
2.0 i 16V	*VS1616*	E	1948	B4204S	A	Y		10/95 ▸	30684432	**506325**	CR	
1.9 TD	*VS7113*	D	1870	D4192T	M	Y		07/96 ▸	30684432	**506325**	CR	
1.9 TD	*VS7113*	D	1870	D4192T	M	Y		07/96 ▸	30684432	**506325**	CR	
S40 (2004>)												
1.6 i 16V	*MS2042*	E	1596	B4164S3	M	Y		01/05 ▸	30684432	**506325**	CR	
1.8 i 16V		E	1798	B4184S11	M	Y		03/04 ▸	30684432	**506325**	CR	
2.0 D 16V		D	1998	D4204T	M	Y		03/04 ▸	8653806	**506719**	CR	
V40												
1.8 i 16V	*VW1213*	E	1731	B4184S	M	Y		10/95 ▸	30684432	**506325**	CR	
1.8 i 16V	*VW1213*	E	1731	B4184S	M	Y		10/95 ▸	30684432	**506325**	CR	
1.8 i 16V	*VW1216*	E	1731	B4184S	A	Y		10/95 ▸	30684432	**506325**	CR	
1.8 i 16V	*VW1216*	E	1731	B4184S	A	Y		10/95 ▸	30684432	**506325**	CR	
1.8 i 16V	*VW*	E	1834	B4184SJ,B4184SM	M	Y		03/98 ▸ 03/04	30874316	**506835**	CR	
1.8 i 16V	*VW*	E	1834	B4184SM	A	Y		03/98 ▸ 03/04	30874316	**506835**	CR	
2.0 i 16V	*VW1613*	E	1948	B4204S	M	Y		10/95 ▸	30684432	**506325**	CR	
2.0 i 16V	*VW1613*	E	1948	B4204S	M	Y		10/95 ▸	30684432	**506325**	CR	
2.0 i 16V	*VW1616*	E	1948	B4204S	A	Y		10/95 ▸	30684432	**506325**	CR	
2.0 i 16V	*VW1616*	E	1948	B4204S	A	Y		10/95 ▸	30684432	**506325**	CR	
1.9 TD	*VW7113*	D	1870	D4192T	M	Y		06/96 ▸	30684432	**506325**	CR	

• **New** Nouveau **Nuevo** Novo **Nuovo** Nieuw **Neu** Yeni Новый Nou

Valeo

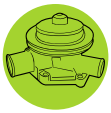

		Type Ctr.		cc					OE	Valeo		
VOLVO (.../...)												
V40 (.../...)												
1.9 TD	*VW7113*	D	1870	D4192T	M	Y		06/96 ▸	30684432	**506325**	CR	
V50												
2.0 i 16V	*MW4342*	E	1999	B4204S3	M	Y		02/06 ▸	30650751	**506325**	CR	
2.4 i 20V	*MW3842, MW6642*	E	2435	B5244S4,B5244S5	M	Y		03/04 ▸	30650751	**506325**	CR	
2.4 i 20V	*MW3849, MW6649*	E	2435	B5244S4,B5244S5	A	Y		03/04 ▸	30650751	**506325**	CR	
2.5 i 20V	*MW6851, MW6854*	E	2521	B5254T3	M	Y		03/04 ▸ 12/05	30650751	**506325**	CR	
2.5 i 20V	*MW6859, MW6857*	E	2521	B5254T3	A	Y		03/04 ▸ 12/05	30650751	**506325**	CR	
1.6 D 16V	*MW7652*	D	1560	D4164T	M	Y		01/05 ▸	30711527	**506715**	CR	
2.0 D 16V	*MW7551, MW7552*	D	1998	D4204T	M	Y		03/04 ▸	8653806	**506719**	CR	
2.4 D5 20V		D	2401	D5244T8,D5244T9	A	Y		02/06 ▸	30684432	**506325**	CR	
S60												
2.4 i CNG 20V 2.4 i GPL 20V	*HV3249*	G	2435	B5244SG, B5244SG2	M	Y	19 teeth	06/01 ▸	274216	**506854**	CR	
2.4 i CNG 20V,2.4 i GPL 20V		G	2435	B5244SG, B5244SG2	A	Y	19 teeth	06/01 ▸	274216	**506854**	CR	
2.0 i Turbo 20V		E	1984	B5204T5	M	Y	19 teeth	08/00 ▸	274216	**506854**	CR	
2.0 i Turbo 20V		E	1984	B5204T5	A	Y	19 teeth	08/00 ▸	274216	**506854**	CR	
2.3 i Turbo 20V	*RS53K2*	E	2318	B5234T3	M	Y	19 teeth	08/00 ▸	274216	**506854**	CR	
2.3 i Turbo 20V	*RS53K9*	E	2318	B5234T3	A	Y	19 teeth	08/00 ▸	274216	**506854**	CR	
2.3 i Turbo 20V		E	2319	B5234T7-E2	A	Y	19 teeth	08/00 ▸	274216	**506854**	CR	
2.4 i 20V,2.4 i Turbo 20V	*RS65P2, RS58K2, RS61P2 RS58K3*	E	2435	B5244S2, B5244T3, B5244S	M	Y	19 teeth	08/00 ▸	274216	**506854**	CR	
2.4 i 20V,2.4 i Turbo 20V	*RS61P9, RS58K7, RS58K9 RS65P9*	E	2435	B5244S, B5244T3, B5244S2	A	Y	19 teeth	08/00 ▸	274216	**506854**	CR	
2.5 i Turbo 20V	*RS5952, RS59G3*	E	2521	B5254T2, B5254T4	M	Y		03/03 ▸	30684432	**506325**	CR	
2.5 i Turbo 20V		E	2521	B5254T4	A	Y		03/03 ▸	30684432	**506325**	CR	
2.4 TDi 20V	*RS7432, RS7932*	D	2401	D5244T2, D5244T	M	Y	19 teeth	06/01 ▸	274216	**506854**	CR	
2.4 TDi 20V	*RS7939*	D	2401	D5244T2, D5244T	A	Y	19 teeth	06/01 ▸	274216	**506854**	CR	
C70												
2.3 i Turbo 20V	*LC5302*	E	2316	B5234T3-240	M	Y		03/97 ▸	30684432	**506325**	CR	
2.3 i Turbo 20V	*LC5302*	E	2316	B5234T3-240	M	Y		03/97 ▸	30684432	**506325**	CR	
2.4 i Turbo 20V	*LC5662*	E	2435	B5254T	M	Y		03/97 ▸	30684432	**506325**	CR	
2.4 i Turbo 20V	*LC5662*	E	2435	B5254T	M	Y		03/97 ▸	30684432	**506325**	CR	
C70 CC (2006>)												
2.4 20V,2.4 i 20V		E	2435	B5244S4,B5244S5	M	Y		01/06 ▸	30650751	**506325**	CR	
2.4 20V,2.4 i 20V		E	2435	B5244S4,B5244S5	A	Y		01/06 ▸	30650751	**506325**	CR	
2.5 i Turbo 20V		E	2521	B5254T3	M	Y		01/06 ▸ 10/06	30650751	**506325**	CR	
2.5 i Turbo 20V		E	2521	B5254T3	A	Y		01/06 ▸ 10/06	30650751	**506325**	CR	
2.0 D 16V		D	1998	D4204T	M	Y		01/07 ▸	8653806	**506719**	CR	
2.4 TDi 20V		D	2401	D5244T9	A	Y		01/06 ▸	30650751	**506325**	CR	
S70												
2.4 i GPL 20V 2.5 i GPL 10V	*LS3402, LS3302*	G	2435	GB5252S2, B5244SG2	M	Y		06/98 ▸ 11/00	30684432	**506325**	CR	
2.4 i GPL 20V 2.5 i GPL 10V	*LS3106, LS3406, LS3309*	G	2435	GB5252S, GB5252S2, B5244SG2	A	Y		05/97 ▸ 11/00	30684432	**506325**	CR	
2.0 i 10V,2.0 i 20V 2.0 i Turbo 20V	*LS4703, LS4302, LS4602 LS4702, LS4102*	E	1984	B5204T3, B5204T4, B5204T2 B5202FS	M	Y		12/96 ▸ 04/99	30684432	**506325**	CR	
2.0 i 10V	*LS4102*	E	1984	B5202FS	M	Y		12/96 ▸ 04/99	272474	**506325**	CR	
2.0 i 10V,2.0 i 20V 2.0 i Turbo 20V	*LS4606, LS4106, LS4706 LS4306*	E	1984	B5204T2, B5202FS, B5204T3 B5204T4	A	Y		12/96 ▸ 04/99	30684432	**506325**	CR	
2.0 i 10V	*LS4106*	E	1984	B5202FS	A	Y		12/96 ▸ 04/99	272474	**506325**	CR	
2.3 i Turbo 20V	*LS5002, LS5302*	E	2318	B5234T4, B5234T3	M	Y		12/96 ▸	30684432	**506325**	CR	
2.3 i 20V,2.3 i Turbo 20V	*LS5302, LS5402, LS5002*	E	2318	B5234T3, B5234FS, B5234T4	M	Y		12/96 ▸	30684432	**506325**	CR	
2.3 i Turbo 20V	*LS5306, LS5366*	E	2318	B5234T3	A	Y		12/96 ▸	30684432	**506325**	CR	
2.3 i 20V,2.3 i Turbo 20V	*LS5306, LS5366, LS5406 LS5906*	E	2318	B5234T3, B5234FS, B5234T2	A	Y		12/96 ▸	30684432	**506325**	CR	
2.3 i Turbo 20V	*LS5706*	E	2319	B5234T7-E6	A	Y		05/97 ▸ 11/00	30684432	**506325**	CR	
2.5 i 10V,2.5 i 20V 2.5 i Turbo 20V	*LS5122, LS5662, LS5522*	E	2435	B5252FS, B5254T, B5254FS	M	Y		12/96 ▸ 04/99	30684432	**506325**	CR	

• **New** Nouveau **Nuevo** Novo **Nuovo** Nieuw **Neu** Yeni Новый Nou

Type Ctr.	cc						OE	Valeo		
VOLVO (.../...)										
S70 (.../...)										
2.4 i 20V,2.4 i Turbo 20V *LS5662, LS5122, LS5522* 2.5 i 10V,2.5 i 20V *LS5663, LS6502, LS5602* 2.5 i Turbo 20V *LS5502, LS6102, LS5603*	E	2435	B5254T, B5252FS, B5254FS B5244S2, B5244T, B5254S B5244S	M	Y		12/96 ▸ 04/99	30684432	**506325**	CR
2.5 i 10V,2.5 i 20V *LS5666, LS5126, LS5526* 2.5 i Turbo 20V	E	2435	B5254T, B5252FS, B5254FS	A	Y		12/96 ▸ 04/99	30684432	**506325**	CR
2.4 i 20V,2.4 i Turbo 20V *LS5126, LS5666, LS5526* 2.5 i 10V,2.5 i 20V *LS6109, LS5506, LS6509* 2.5 i Turbo 20V *LS6107, LS5606, LS5608*	E	2435	B5252FS, B5254T, B5254FS B5244S, B5254S, B5244S2 B5244T	A	Y		12/96 ▸ 04/99	30684432	**506325**	CR
2.4 TDi 10V *LS7202*	D	2461	D5252T	M	Y	18 teeth	12/96 ▸ 11/00	274155	**506488**	CR
2.4 TDi 10V *LS7206*	D	2461	D5252T	A	Y	18 teeth	12/96 ▸ 11/00	274155	**506488**	CR
V70 (96>99)										
2.0 i 10V *LW4102*	E	1984	B5202FS	M	Y		05/97 ▸ 06/98	30684432	**506325**	CR
2.0 i 10V *LW4102*	E	1984	B5202FS	M	Y		05/97 ▸ 06/98	272474	**506325**	CR
2.0 i 10V *LW4106*	E	1984	B5202FS	A	Y		05/97 ▸ 06/98	272474	**506325**	CR
2.0 i 10V *LW4106*	E	1984	B5202FS	A	Y		05/97 ▸ 06/98	30684432	**506325**	CR
2.3 i Turbo 20V *LW5302, LW5002, LW5062*	E	2318	B5234T3, B5234T4	M	Y		05/97 ▸ 06/98	272474	**506325**	CR
2.3 i Turbo 20V *LW5302, LW5062, LW5002*	E	2318	B5234T3, B5234T4	M	Y		05/97 ▸ 06/98	30684432	**506325**	CR
2.3 i Turbo 20V *LW5306, LW5366, LW5266*	E	2318	B5234T3, B5234T6	A	Y		05/97 ▸ 06/98	272474	**506325**	CR
2.3 i Turbo 20V *LW5266, LW5306, LW5366*	E	2318	B5234T6, B5234T3	A	Y		05/97 ▸ 06/98	30684432	**506325**	CR
2.5 i 10V,2.5 i 20V *LW5522, LW5662, LW5122* 2.5 i Turbo 20V *LW5663*	E	2435	B5254FS, B5254T, B5252FS	M	Y		12/96 ▸ 12/99	30684432	**506325**	CR
2.5 i 10V,2.5 i 20V *LW5663, LW5662, LW5122* 2.5 i Turbo 20V *LW5522*	E	2435	B5254T, B5252FS, B5254FS	M	Y		12/96 ▸ 12/99	272474	**506325**	CR
2.5 i 10V,2.5 i 20V *LW5126, LW5666, LW5526* 2.5 i Turbo 20V	E	2435	B5252FS, B5254T, B5254FS	A	Y		12/96 ▸ 12/99	272474	**506325**	CR
2.5 i 10V,2.5 i 20V *LW5666, LW5526, LW5126* 2.5 i Turbo 20V	E	2435	B5254T, B5254FS, B5252FS	A	Y		12/96 ▸ 12/99	30684432	**506325**	CR
2.4 TDi 10V *LW7202*	D	2461	D5252T	M	Y	18 teeth	05/97 ▸ 06/98	2717684	**506488**	CR
2.4 TDi 10V *LW7206*	D	2461	D5252T	A	Y	18 teeth	05/97 ▸ 06/98	2717684	**506488**	CR
V70 (2000>2007)										
2.0 i Turbo 20V	E	1984	B5204T5	M	Y		01/00 ▸	30684432	**506325**	CR
2.0 i Turbo 20V	E	1984	B5204T5	A	Y		01/00 ▸	30684432	**506325**	CR
2.3 i 20V	E	2319	B5234T3-E2	M	Y		01/00 ▸ 03/05	30684432	**506325**	CR
2.3 i 20V	E	2319	B5234T3-E2, B5234T7	A	Y		01/00 ▸ 03/05	30684432	**506325**	CR
2.4 i 20V	E	2401	B5244T5	M	Y		04/04 ▸	30684432	**506325**	CR
2.4 i 20V	E	2401	B5244T5	A	Y		04/04 ▸	30684432	**506325**	CR
2.4 i 20V	E	2435	B5244S, B5244S2, B5244T3	M	Y		01/00 ▸	30684432	**506325**	CR
2.4 i 20V	E	2435	B5244S2, B5244T4, B5244T3 B5244S	A	Y		01/00 ▸	30684432	**506325**	CR
2.5 T 20V *SW5244*	E	2521	B5254T2, B5254T4	M	Y		01/02 ▸	30684432	**506325**	CR
2.5 T 20V	E	2521	B5254T2, B5254T4	A	Y		01/02 ▸	30684432	**506325**	CR
2.4 TDi 20V	D	2401	D5244T, D5244T7, D5244T4 D5244T3, D5244T2, D5244T5	M	Y	19 teeth	01/00 ▸	274216	**506854**	CR
2.4 TDi 20V	D	2401	D5244T2, D5244T	A	Y	19 teeth	01/00 ▸	274216	**506854**	CR
2.5 TDi 10V	D	2461	D5252T	M	Y	19 teeth	01/00 ▸ 12/01	274216	**506854**	CR
S80 (98>2006)										
2.4 i CNG 20V,2.4 i GPL 20V	G	2435	B5244SG, B5244SG2	M	Y		09/01 ▸	30684432	**506325**	CR
2.4 i CNG 20V,2.4 i GPL 20V	G	2435	B5244SG, B5244SG2	A	Y		09/01 ▸	30684432	**506325**	CR
2.0 i 20V,2.0 i Turbo 20V	E	1984	B5204T4, B5204T5, B5204T3	M	Y		06/98 ▸	30684432	**506325**	CR
2.0 i 20V,2.0 i Turbo 20V	E	1984	B5204T3, B5204T4, B5204T5	A	Y		06/98 ▸	30684432	**506325**	CR
2.4 i 20V,2.4 i Turbo 20V	E	2435	B5244S2, B5244S, B5244T3	M	Y		06/98 ▸	30684432	**506325**	CR
2.4 i 20V,2.4 i Turbo 20V	E	2435	B5244S2, B5244S, B5244T3	A	Y		06/98 ▸	30684432	**506325**	CR
2.5 i Turbo 20V	E	2521	B5254T2	M	Y		07/03 ▸	30684432	**506325**	CR
2.5 i Turbo 20V	E	2521	B5254T2	A	Y		07/03 ▸	30684432	**506325**	CR
2.8 i	E	2783	B6284T	A	Y	19 teeth	01/03 ▸	274216	**506854**	CR
2.8 i	E	2783	B6284T	A	Y	14 teeth	06/98 ▸ 12/02	272334	**506853**	CR
2.9 i	E	2922	B6304S3	M	Y	14 teeth	06/98 ▸ 12/99	272334	**506853**	CR
2.9 i,3.0 i 24V	E	2922	B6294S2, B6294T	A	Y	19 teeth	01/03 ▸	274216	**506854**	CR
2.9 i,3.0 i 24V	E	2922	B6304S3, B6294S2, B6294T	A	Y	14 teeth	06/98 ▸ 12/02	272334	**506853**	CR
2.4 TDi 20V	D	2401	D5244T	M	Y		07/01 ▸	30684432	**506325**	CR

• **New** Nouveau **Nuevo** Novo **Nuovo** Nieuw **Neu** Yeni Новый Nou

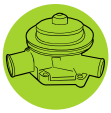

Type Ctr.		cc						OE	Valeo		
VOLVO (.../...)											
S80 (98>2006) (.../...)											
2.4 TDi 20V	D	2401	D5244T2	M	Y	19 teeth	10/01 ▸	274216	**506854**	CR	
2.4 TDi 20V	D	2401	D5244T	A	Y		07/01 ▸	30684432	**506325**	CR	
2.4 TDi 20V	D	2401	D5244T2	A	Y	19 teeth	10/01 ▸	274216	**506854**	CR	
2.4 TDi 10V	D	2461	D5252T	M	Y	18 teeth	06/98 ▸	274155	**506488**	CR	
2.4 TDi 10V	D	2461	D5252T	A	Y	18 teeth	06/98 ▸	274155	**506488**	CR	
S80 (2006>)											
2.0 i Flexifuel 16V	F	1999	B4204S4	M	Y		10/07 ▸	30777590	**506694**	N	
2.0 i 16V	E	1999	B4204S3	M	Y		10/07 ▸	30777590	**506694**	N	
2.0 16V	D	1998	D4204T	M	Y		09/07 ▸	8653806	**506719**	CR	
S90											
3.0 *964961*	E	2922	B6304S2	M	Y		09/96 ▸	2719847	**506588**	CR	
3.0 *964956*	E	2922	B6304S1	A	Y		09/96 ▸	2719847	**506588**	CR	
V90											
3.0 *965961*	E	2922	B6304S2	M	Y		09/96 ▸	2719847	**506588**	CR	
3.0 *965956, 965966*	E	2922	B6304S1, B6304S2	A	Y		09/96 ▸	2719847	**506588**	CR	
YUGO/ZASTAVA											
Florida											
1.4 *103A*	E	1372	160A1.000	M	Y		09/89 ▸	5894583	**506119**	V	506386
Sana											
1.4 *103A*	E	1372	160A1.000	M	Y		09/89 ▸	5894583	**506119**	V	506386
Yugo											
0.9 *145A*	E	903	100GL064	M	Y		04/80 ▸	4471378	**506079**	V	

• **New** Nouveau **Nuevo** Novo **Nuovo** Nieuw **Neu** Yeni Новый Nou

THERMOSTAT

THERMOSTAT / TERMOSTATO / TERMOSTATO / THERMOSTAT

VALEO PRODUCT CHARACTERISTICS

Caractéristiques du produit Valeo / Características del producto Valeo / Caratteristiche del prodotto Valeo / Valeo Produktmerkmale

WAX THERMOSTAT

Thermostat à base de cire / Termostato de parafina / Paraffina termostato / Wachsthermostat

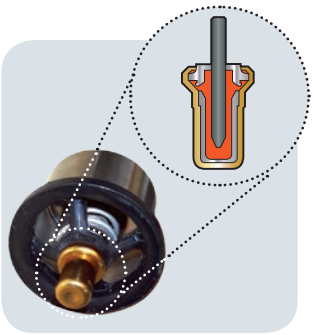

Sleeve

- FR Couvercle
- SP Cubierta
- IT Corpechio
- DE Deckel

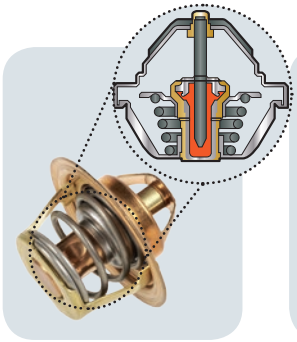

Insert

- FR Insert
- SP Inserto
- IT Inserto
- DE Einsatz

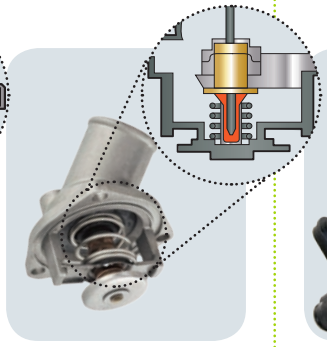

Integrated

- FR Intégré
- SP Integrado
- IT Integrato
- DE Einschub

ELECTRICALLY CONTROLLED

Contrôlé électriquement / Control eléctrico / A comando elettrico / Elektrisch Angetrieben

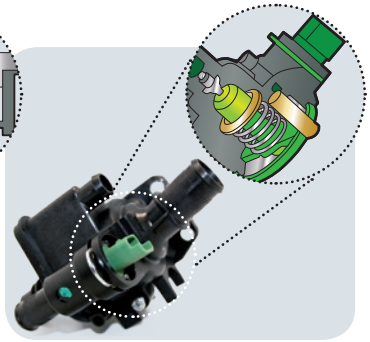

Piloted

- FR Piloté
- SP Pilotado
- IT Pilotato
- DE Gesteuerte Elektrisch

POSITION IN VEHICLE

Position dans le véhicule / Posición en vehiculo / Posizione nel veicolo / Position Im Fahrzeug

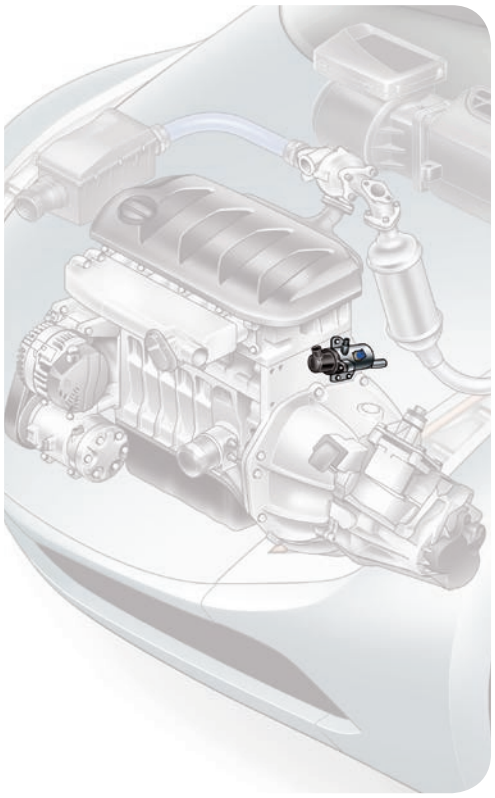

- EN The thermostat is integrated and mounted in the engine block adjusting the coolant flow towards the radiator
- FR Le thermostat est intégré et monté dans le bloc moteur et régule le débit du liquide de refroidissement vers le radiateur
- SP El termostato se encuentra integrado en el monoblock del motor controlando el flujo del liquido refrigerante hacia el radiador
- IT Il termostato è integrato nel il blocco motore, controllare il flusso di refrigerante al radiatore
- DE Der Thermostat ist integriert und im Motorblock verbaut, um Kühlmitteldurchfluss zum Kühler zu regeln

INTERFACE

Interface / Interfaz / Interfaccia / Schnittstelle

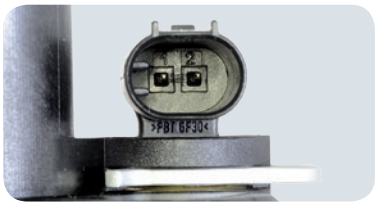

CONNECTOR (NUMBER OF PINS)

- FR Connecteur (Nombre de broches)
- SP Conector (Numéro de contactos)
- IT Connettore (Numero di Pin)
- DE Anschluss (Anzahl der Pins)

ACCESSORIES

OF PRODUCT FOR MOUNTING*

Accessoires de produit pour le montage* / Accesorios del producto para el montaje* / Accessori del prodotto per il montaggio* / Zubehör für den Einbau des Produkts*

- EN * There are several configurations in the range
- FR * Il existe plusieurs configurations dans l'offre
- SP * Existen varias configuraciones en la gama
- IT * Non tutti i riferimenti possono avere gli accessori, così come indicato nell'immagine
- DE * Mehrere Konfigurationen Werden Angeboten

2

1 **Jiggle pin**
Cage à bille
Chapa
Cuscinetto a sfere
Eenrichtingsklep
Kugellager
Supapă in forma de cui
Kumanda mandalı

2 **Jiggle pin inversed**
Cage à bille inversée
Chapa invertida
Cuscinetto a sfere invertito
Omgedraaide eenrichtingsklep
Umgedrehter Kugellager
Supapă in forma de cui inversată
Ters kumanda mandalı

3 **Tag insert**
Cale
calce
Tenuta
Tussenstuk
Unterlegkeil
Pană
Fiş

4 **Rubber valve**
Clapet surmoulé
Válvula
Valvola in gomma
Hoofdklep in rubber zitting
Gegossenes Klappenventil
Zaw r gumowy
Gumov klapka
Gumi szelep
Valvă de cauciuc
Lastik valf

5 **Locating lug**
Indexeur de positionnement
Lengüeta de posición
Indicatore di posizione
Positioneringsindex
Positionsindex
Indicator de poziţionare
Konumlandırma baglantısı

6 **With leak hole**
Trou de fuite
Agujero de fuga
Con foro di uscita
Lekgat
Leckageloch
Spărtură
Sızıntı kanalı ile

7 **Off-set valve seat**
Tubulure excentrée
Válvula en posición lateral
Sede della valvola chiusura
Off-set klep zitting
Off-set
Supapă deviată
Sübop yuvası

8 **Jiggle pin**
Goupille
Chapa
Spillo
Klep
Jiggle Pin
Supapă in forma de cui
Kopilya

9 **Jiggle pin inversed**
Goupille inversée
Chapa invertida
Spillo invertito
Omgedraaide klep
Umgedrehter Jiggle Pin
Supapă in forma de cui inversată
Ters kumanda mandalı

10 **With leak groove**
Cran de Fuite
sistema antifuga
Con la scanalatura di uscita
Lekgroef
Leckagekerbe
Cu canal de curgere
Sızıntı yivi ile

Valeo

Type Ctr.		cc		AC		2 3	OE	Valeo	(°)C	
ALFA ROMEO										
33 (83>89)										
1200 *905A*	E	1189	AR30500	M		☞10	08/83 ▸ 1989	0060504230	**819881**	83	Y
1.3 AS,1.3 DC *905A1*	E	1351	AR30512, AR30502, AS30568 AR30168, AS30587, AS30168	M		☞10	08/83 ▸ 07/89	0060504230	**819881**	83	Y
1.5,1.5 AS,1.5 DC,1.5 i *905A2*	E	1490	AR30520, AR30504, AR30526 AR30146, AR30182, AR30514 AS30508	M		☞10	08/83 ▸ 07/89	0060504230	**819881**	83	Y
1.5 AS *905A2*	E	1490	AS30508	M			07/88 ▸ 07/89	0060557407	**820055**	86	N
1.7 i,1.7 ie *905/A3/A4*	E	1712	AS30550, AR30550	M		☞10	09/86 ▸ 07/89	0060504230	**819881**	83	Y
1.7 i,1.7 ie *905/A3/A4*	E	1712	AR30558, AS30550, AS30558 AR30550	M			09/86 ▸ 07/89	0060557407	**820055**	86	N
33 (89>94)										
1.2 *907A4*	E	1186	AR30743	M			08/89 ▸ 09/94	0060557407	**820055**	86	N
1.3,1.3 ie,1.4 ie *907/A3/B3*	E	1351	AR30755, AR30732	M			08/89 ▸ 09/94	0060557407	**820055**	86	N
1.5,1.5 ie *907/A2/B2*	E	1490	AR30751, AR30750, AR30734	M			08/89 ▸ 09/94	0060557407	**820055**	86	N
1.7 i 16V,1.7 ie *907/A1/AB/B1*	E	1712	AR30746, AR30737, AR30736 AR60746, AR30747	M			08/89 ▸ 09/94	0060557407	**820055**	86	N
75 (85>93)										
1.6 *162B2*	E	1567	AR06100	M			05/85 ▸ 1993	60516212	**819957**	83	Y
1.6 ie *162B2*	E	1567	AR61101,AR61102	M			09/89 ▸ 1993	0060534691	**820060**	83	Y
1.8 Turbo,1.8 i *162B1*	E	1779	AR06134,AR06202	M			05/85 ▸ 1993	60516212	**819957**	83	Y
1.8 Turbo,1.8 Turbo E 1.8 ie *162B1*	E	1779	AR06134,AR06158,AR06168 AR61201,AR61202,AR61203	M			01/87 ▸ 1993	0060534691	**820060**	83	Y
2.0 *162BA, 162BF*	E	1962	AR06212	M			05/85 ▸ 07/87	60516212	**819957**	83	Y
2.0 i Twin Spark *162B4*	E	1962	AR06166,AR06224	M			01/87 ▸ 1993	0060534691	**820060**	83	Y
90										
1.8 i,1800 i *162A1*	E	1779	AR06202	M			09/84 ▸ 1988	60516212	**819957**	83	Y
2.0 i,2000,2000 i *162A2*	E	1962	AR01713,AR06212	M			09/84 ▸ 1988	60516212	**819957**	83	Y
145										
1.3 i *930A3*	E	1351	AR33501	M	+/-		09/94 ▸ 12/96	0060591817	**820055**	86	N
1.4 i Twin Spark 16V *930A3*	E	1370	AR33503	M	+/-		12/96 ▸ 02/98	0060614140	**820404**	83	Y
1.6 i *930A2*	E	1596	AR33201	M	+/-		09/94 ▸ 12/96	0060591817	**820055**	86	N
1.6 i Twin Spark 16V *930A2* 165089 ▸	E	1598	AR67601, AR32102	M			12/96 ▸ 06/01	0060653946	**820402**	88	Y
1.7 i 16V *930A1*	E	1712	AR33401	M	+/-		09/94 ▸ 12/96	0060591817	**820055**	86	N
1.8 i Twin Spark 16V *930A1*	E	1747	AR67106, AR67199	M	+/-		12/96 ▸ 06/01	0060602148	**820401**	83	Y
1.8 i Twin Spark AGV 16V *930A1*	E	1747	AR32201	M	+/-		06/98 ▸ 04/99	0060653946	**820402**	88	Y
2.0 i 16V *930A5*	E	1970	AR67299, AR67204	M	+/-		12/96 ▸ 06/01	0060602148	**820401**	83	Y
2.0 i AGV 16V *930A5*	E	1970	AR32301	M	+/-		06/98 ▸ 06/01	0060653946	**820402**	88	Y
1.9 JTD *930A4*	D	1910	AR32302	M	+/-		03/99 ▸ 06/01	60815681	**820411**	88	Y
1.9 TD *930A4*	D	1929	AR67501	M	+		09/94 ▸	0060808795	**820406**	80	Y
1.9 TD *930A4*	D	1929	AR33601	M	+	☞2	12/96 ▸ 03/99	0060812437	**820403**	80	Y
1.9 TD *930A4*	D	1929	AR67501	M	-	☞4	09/94 ▸	0060809590	**819964**	80	Y
1.9 TD *930A4*	D	1929	AR67501	M	-		09/94 ▸ 03/99	60812296	**820407**	80	Y
1.9 TD *930A4*	D	1929	AR67501	M	+		09/94 ▸ 03/99	60812298	**820155**	80	Y
1.9 TD *930A4*	D	1929	AR33601	M	-	☞2	12/96 ▸ 03/99	0060812436	**820066**	80	Y
146										
1.3 i *930B3*	E	1351	AR33501	M			12/94 ▸ 12/96	0060591817	**820055**	86	N
1.4 i Twin Spark 16V *930B3*	E	1370	AR33503	M			12/96 ▸ 06/01	0060614140	**820404**	83	Y
1.6 i *930B2*	E	1596	AR33201	M			12/94 ▸ 12/96	0060591817	**820055**	86	N
1.6 i Twin Spark 16V *930B2* 03174687 ▸	E	1598	AR67601	M			06/98 ▸ 06/01	60653946	**820402**	88	Y
1.6 i Twin Spark 16V *930B2* ▸0165088	E	1598	AR67601	M			12/96 ▸	0060614140	**820404**	83	Y
1.7 i 16V *930B1*	E	1712	AR33401	M			12/94 ▸ 12/96	0060591817	**820055**	86	N
1.8 i Twin Spark 16V *930B1*	E	1747	AR67106	M			12/96 ▸ 06/01	0060602148	**820401**	83	Y
1.8 i Twin Spark AGV 16V *930B1*	E	1747	AR32201	M			06/98 ▸ 06/01	60653946	**820402**	88	Y
2.0 i 16V *930B5*	E	1970	AR67204	M			12/96 ▸ 06/01	0060602148	**820401**	83	Y
2.0 i Twin Spark AGV 16V *930B5*	E	1970	AR32301	M			06/98 ▸ 06/01	60653946	**820402**	88	Y
1.9 TDs *930B4*	D	1929	AR67501, AR33601	M	+		12/94 ▸ 06/01	0060808795	**820406**	80	Y

• **New** Nouveau **Nuevo** Novo **Nuovo** Nieuw **Neu** Yeni Новый Nou

Type Ctr.		CC		AC		2 3	OE	Valeo	(°)C	
ALFA ROMEO (.../...)										
146 (.../...)										
1.9 TDs 1761924 ▸	*930B4*	D	1929	AR67501	M	+		12/94 ▸ 06/01	60812298	**820155**	80	Y
1.9 TDs	*930B4*	D	1929	AR33601, AR67501	M	+	☞2	12/96 ▸ 06/01	0060812437	**820403**	80	Y
1.9 TDs	*930B4*	D	1929	AR33601, AR67501	M		☞4	12/94 ▸ 06/01	0060809590	**819964**	80	Y
1.9 TDs	*930B4*	D	1929	AR67501, AR33601	M		☞2	12/96 ▸ 06/01	0060812436	**820066**	80	Y
147 (2000>2004)										
1.6 i Twin Spark 16V	*937/AX/BX*	E	1598	AR32104	M			10/00 ▸	0060653946	**820402**	88	Y
1.6 i Twin Spark 16V	*937BX, 937AX*	E	1598	AR37203	M			10/00 ▸ 09/04	60663619	●**820796**	88	Y
2.0 i Twin Spark 16V	*937/AX/BX*	E	1970	AR32310	M			10/00 ▸	0060653946	**820402**	88	Y
1.9 JTD	*937/AX/BX*	D	1910	937A2.000, 182B9.000	M			10/00 ▸	46790294	**820562**	88	Y
1.9 JTD 16V	*937/AX/BX*	D	1910	937A4.000, 192B1.000	M			12/02 ▸	55189845	**820578**	88	Y
147 (2004>)										
1.6 i Twin Spark 16V	*937/AX/BX*	E	1598	AR32104	M			10/04 ▸	60653946	**820402**	88	Y
1.6 i Twin Spark 16V	*937AX, 937BX*	E	1598	AR37203	M			10/04 ▸	60663619	●**820796**	88	Y
2.0 i Twin Spark 16V	*937/AX/BX*	E	1970	AR32310	M			10/04 ▸	60653946	**820402**	88	Y
1.9 JTD	*937/AX/BX*	D	1910	937A2.000, 182B9.000	M			10/04 ▸	46790294	**820562**	88	Y
1.9 JTD 16V,1.9 JTDM	*937/AX/BX*	D	1910	937A4.000, 937A5.000 192A5.000	M			10/04 ▸	55189845	**820578**	88	Y
155										
1.6 i Twin Spark 16V	*167A6*	E	1598	AR67601	M			04/96 ▸ 08/97	0060614140	**820404**	83	Y
1.7 i Twin Spark 16V	*167A4*	E	1747	AR67106	M			04/96 ▸ 08/97	0060602148	**820401**	83	Y
1.7 i Twin Spark	*167A4*	E	1749	AR67105, AR67103	M			11/91 ▸ 08/97	0060556559	**820061**	87	N
1.8 i Twin Spark	*167A4*	E	1773	AR67102, AR67101	M			11/91 ▸ 03/95	0060556559	**820061**	87	N
2.0 i Twin Spark 16V	*167A2*	E	1970	AR67204, AR67299	M			03/95 ▸ 08/97	0060602148	**820401**	83	Y
2.0 i Twin Spark	*167A2*	E	1995	AR67202, AR67201	M			11/91 ▸ 03/95	0060556559	**820061**	87	N
1.9 TD	*167A3*	D	1929	AR67501, AR33601	M	+	☞2	07/93 ▸ 08/97	0060812437	**820403**	80	Y
1.9 TD	*167A3*	D	1929	AR33601, AR67501	M		☞2	07/93 ▸ 08/97	0060812436	**820066**	80	Y
156 (97>2003)										
1.6 i Twin Spark 16V	*932/A4/B4*	E	1598	AR32104, AR67601, AR32102 AR32103	M			04/00 ▸	60653946	**820402**	88	Y
1.8 i Twin Spark 16V	*932/A3/B3*	E	1747	AR32201, AR32205	M			04/00 ▸	0060653946	**820402**	88	Y
2.0 i Twin Spark 16V	*932/A2/B2*	E	1970	AR32310, AR32301	M			04/00 ▸	60653946	**820402**	88	Y
2.0 JTS 16V	*932/AX/BX*	E	1970	937A1.000	M			02/02 ▸ 03/03	60676067	**820926**	88	Y
1.9 JTD	*932B2*	D	1910	AR32302	M			04/00 ▸	60815681	**820411**	88	Y
1.9 JTD	*932/A2/B2*	D	1910	937A2.000	M			09/00 ▸ 03/03	46795667	**820562**	88	Y
1.9 JTD	*932A*	D	1910	AR32302	M			09/97 ▸	46527105	**820410**	88	Y
2.4 JTD	*932B1*	D	2387	AR32501	M			10/98 ▸ 03/03	60815681	**820411**	88	Y
2.4 JTD 10V	*932/AX/BX*	D	2387	841C.000	M			09/00 ▸ 03/03	46822435	**820561**	88	Y
2.4 JTD	*932/A/B1*	D	2387	AR32501	M			09/97 ▸	46527105	**820410**	88	Y
156 (2003>)										
1.6 i Twin Spark 16V	*932/A4/B4*	E	1598	AR32104	M			04/03 ▸	0060653946	**820402**	88	Y
1.8 i Twin spark 16V	*932/A3/B3*	E	1747	AR32205	M			04/03 ▸	60653946	**820402**	88	Y
2.0 i Twin Spark 16V	*932B2*	E	1970	AR32310	M			04/03 ▸	60653946	**820402**	88	Y
2.0 JTS 16V 2.0 JTS TwinSpark 16V	*932/AX/BX*	E	1970	937A1.000, 932A2.000	M			04/03 ▸	60676067	**820926**	88	Y
1.9 JTD	*932/A2/B2*	D	1910	937A2.000	M			04/03 ▸	60816475	**820562**	88	Y
1.9 JTD,1.9 JTD 16V	*932/AX/BX*	D	1910	937A4.000, 192A5.000 937A5.000	M			04/03 ▸	55189843	**820578**	88	Y
2.4 JTD 10V,2.4 JTD 20V	*932/AX/BX*	D	2387	939A6.000	M			04/03 ▸	60816881	**820561**	88	Y
159										
1.9 JTDM 16V,1.9 JTDM 8V	*939/AX/BX*	D	1910	939A1.000, 937A7.000 937A8.000, 939A2.000	M			07/05 ▸	55202510	**820965**	88	Y
1.9 JTDM 16V	*939/AX/BX*	D	1910	939A2.000, 937A8.000	A			07/05 ▸	55202510	**820965**	88	Y
2.4 JTDM 20V	*939/AX/BX*	D	2387	939A3.000	M			07/05 ▸	55202885	**820578**	88	Y
2.4 JTDM 20V	*939/AX/BX*	D	2387	939A3.000	A			12/05 ▸	55202885	**820578**	88	Y
164 (87>92)										
2.0 Turbo	*164A2*	E	1995	AR06476	M		☞8	07/87 ▸ 09/92	0060805288	**819882**	81	Y

• **New** Nouveau **Nuevo** Novo **Nuovo** Nieuw **Neu** Yeni Новый Nou

Type Ctr.		CC		AC		2 3	OE	Valeo	(°)C	
ALFA ROMEO (.../...)										
164 (87>92) (.../...)										
2.0 V6 Turbo *164A2*	E	1997	AR64102, AR64101	M		☞8	10/90 ▸ 09/92	0060805288	**819882**	81	Y
164 (92>98)										
2.0 i Twin Spark *164H3*	E	1962	AR64103	M			09/92 ▸ 09/98	0060556559	**820061**	87	N
166 (98>2003)										
2.0 i Twin Spark 16V *936A3*	E	1970	AR34103, AR36301	M			10/98 ▸	60609026	**820412**	88	Y
2.4 JTD,2.4 JTD 10V *936/A2/AX*	D	2387	AR34202, 839A6.000, 841C.000	M	+/-		10/98 ▸ 09/03	55189843	**820578**	88	Y
2.4 JTD *936A2*	D	2387	AR34202	M			10/98 ▸ 10/00	46527104	**820518**	88	Y
166 (2003>)										
2.0 i Twin Spark 16V *936A3*	E	1970	AR36301	M			10/03 ▸	60609026	**820412**	88	Y
2.4 JTD 10V *936/A3/AX*	D	2387	841C.000	M			10/03 ▸	46795667	**820562**	88	Y
2.4 JTD 20V *936AX*	D	2387	841G.000	M			10/03 ▸	55189843	**820578**	88	Y
2.4 JTD 20V *936AX*	D	2387	841H.000	A			10/03 ▸	55189843	**820578**	88	Y
Alfasud										
1.2 *901/D4/D5*	E	1186	AS30102, AS30104	M		☞10	01/80 ▸	0060504230	**819881**	83	Y
1.2,1200 *901/A/A2/C/C3/D/D1/D2/D3 D4, 904/A/A1/A2/A3*	E	1186	AS30100, AS30102, AS30104 AS30110, AS30111	M		☞10	11/71 ▸	0060504230	**819881**	83	Y
1.3,1300 *901/F/G1, 904B, 902/A/A2*	E	1286	AS30180, AS30184, AS30190	M		☞10	09/76 ▸ 07/79	0060504230	**819881**	83	Y
1.35,1.35 i *901/F3/G4*	E	1351	AS30164, AS30168	M		☞10	01/80 ▸	0060504230	**819881**	83	Y
1.35,1.35 i,1350 *901/F2/F3/G2/G4, 904B2 902/04/05*	E	1351	AS30164, AS30168, AS30160 AS30156	M		☞10	09/78 ▸	0060504230	**819881**	83	Y
1.5,1.5 i *901/F4/G5*	E	1490	AS30128, AS30124, AS30133	M		☞10	01/80 ▸	0060504230	**819881**	83	Y
1.5,1.5 i,1500 *901/F1/F4/G1/G5, 902/02 03*	E	1490	AS30133, AS30124, AS30146 AS30126, AS30128, AS30198	M		☞10	12/78 ▸	0060504230	**819881**	83	Y
Alfetta										
1.6,1600 *11605, 11604, 11602 11600, 116B1*	E	1567	AR01600	M			01/75 ▸ 1985	60516212	**819957**	83	Y
1.8,1800 *11609, 11642, 11611 11610, 11654, 116B2*	E	1779	AR01608,AR01678	M			05/72 ▸ 1985	60516212	**819957**	83	Y
2.0,2000 i *11655, 11663*	E	1962	AR01605,AR01615,AR01655	A			07/78 ▸ 06/81	60516212	**819957**	83	Y
2.0,2.0 i,2000,2000 i *11656, 11658, 11655 11629, 11636, 11637 11615*	E	1962	AR01334,AR01615,AR01623 AR01629,AR01655,AR01674	M			05/76 ▸ 1985	60516212	**819957**	83	Y
Arna										
1.2 *920/A/AA*	E	1186	AR31000	M		☞10	09/83 ▸ 12/84	0060504230	**819881**	83	Y
1.2 *920/AB/AC*	E	1189	AR30500	M		☞10	11/84 ▸ 1987	0060504230	**819881**	83	Y
1.3 *920A1*	E	1351	AR30512, AR31010, AR31006	M		☞10	09/83 ▸ 1987	0060504230	**819881**	83	Y
1.5 *920*	E	-		M		☞10	09/83 ▸ 1987	0060504230	**819881**	83	Y
Brera										
2.4 JTDM 20V *939DX*	D	2387	939A3.000	M			01/06 ▸	55194768	**820578**	88	Y
Giulia										
1760 D	D	1760	AR11540	M			05/76 ▸ 1979	105001106400	**819845**	82	Y
1.3,1300	E	1290	ALFA01,ALFA02,ALFA05,AR00530	M			07/64 ▸ 1979	105001106400	**819845**	82	Y
1600	E	1567	105.26,AR00526	M			1965 ▸ 1979	105001106400	**819845**	82	Y
Giulietta (76>86)										
1.3 *11644, 116*	E	1357	AR01644	M			1978 ▸ 06/83	60516212	**819957**	83	Y
1.6 *11348, 11650, 11349*	E	1567	AR01600	M			10/77 ▸ 1986	60516212	**819957**	83	Y
1.8,1800 *116AA, 116AB, 116A, 11350 11351*	E	1779	AR01678	M			03/79 ▸ 1986	60516212	**819957**	83	Y
2.0 Turbo,2.0 i,2000 i *116A1, 11356, 11363 11362*	E	1962	AR01655,AR01699	M			08/79 ▸ 1986	60516212	**819957**	83	Y
GT										
1.8 i Twinspark 16V *937CX*	E	1747	AR32205	M			01/04 ▸	60653946	**820402**	88	Y
2.0 JTS 16V *937/CH/CX*	E	1970	937A1.000, 932A2.000	M			09/03 ▸	60676067	**820926**	88	Y

• **New** Nouveau **Nuevo** Novo **Nuovo** Nieuw **Neu** Yeni Новый Nou

			Type Ctr.		cc			AC		2 3	OE	Valeo	(°)C	
ALFA ROMEO (.../...)														
GT (.../...)														
1.9 JTD 16V	*937CX*	D		1910	937A5.000	M			09/03 ▸		55189845	**820578**	88	Y
GTV (95>2003)														
1.8 i Twin Spark 16V	*916C3*	E		1747	AR32201	M			05/98 ▸		0060653946	**820402**	88	Y
2.0 i Twin Spark 16V	*916C2*	E		1970	AR16201	M			03/95 ▸ 08/00		0060602148	**820401**	83	Y
2.0 Twin Spark AGV 16V 2.0 i Twin Spark 16V	*916C2*	E		1970	AR32301, AR32310	M			05/98 ▸		0060653946	**820402**	88	Y
GTV (2003>)														
2.0 i Twin Spark 16V	*916S2*	E		1970	AR32310	M			03/03 ▸		0060653946	**820402**	88	Y
2.0 JTS 16V	*916CX*	E		1970	937A1.000	M			03/03 ▸		60676067	**820926**	88	Y
MiTo														
1.4 MPI 16V,1.4 i 16V	*145/7X/AX*	E		1368	955A1.000	M	+/-		04/08 ▸		55202176	**820935**	88	Y
Spider (71>93)														
1.6	*115A2*	E		1567	AR01563	M			01/90 ▸ 1993		60516212	**819957**	83	Y
Spider (95>2003)														
1.8 i Twin Spark 16V	*916S3*	E		1747	AR32201	M			02/95 ▸		0060653946	**820402**	88	Y
2.0 i Twin Spark 16V	*916S2*	E		1970	AR16201	M			02/95 ▸		0060602148	**820401**	83	Y
2.0 i Twin Spark 16V	*916S2*	E		1970	AR32301, AR32310	M			05/98 ▸ 02/03		0060653946	**820402**	88	Y
Spider (2003>2006)														
2.0 i Twin Spark 16V	*916S*	E		1970	AR32310	M			03/03 ▸		0060653946	**820402**	88	Y
2.0 JTS 16V	*916S*	E		1970	937A1.000	M			03/03 ▸		60676067	**820926**	88	Y
Spider II (2006>)														
2.4 JTDM 20V	*939EX*	D		2387	939A3.000	M			02/07 ▸		55194768	**820578**	88	Y
Sprint														
1.35	*902A4*	E		1351	AS30168	M		☞10	01/80 ▸ 1989		0060504230	**819881**	83	Y
1.5,1500,1500 i	*902A5*	E		1490	AR30146, AS30128, AR30198 AR30182, AR30520, AS30126	M		☞10	07/79 ▸ 1989		0060504230	**819881**	83	Y
1.7 i,1.7 ie	*902A6*	E		1712	AR30550, AR30558	M		☞10	04/88 ▸ 1989		0060504230	**819881**	83	Y
ALFA ROMEO														
AR6														
1.9 D	*AR6*	D		1929	160D.100	M			04/85 ▸ 12/89		60812296	**820407**	80	Y
AUDI														
50														
1.1 8692500001 ▸	*863/1/2*	E		1093	HD, HB, HC	M		☞10	08/74 ▸ 07/78		036121113B	**819854**	92	Y
1.1 ▸ 8682600000	*863/1/2*	E		1093	HC, HB, HD	M		☞10	08/74 ▸		036121113	**819853**	87	Y
1.3 8692500001 ▸	*8632*	E		1272	HH	M		☞10	08/74 ▸ 07/78		036121113B	**819854**	92	Y
1.3 ▸ 8682600000	*8632*	E		1272	HH	M		☞10	08/77 ▸		036121113	**819853**	87	Y
80 (72>81)														
1.3		E		1272	ZA, FY, ZF, FZ	M		☞4	05/72 ▸ 07/81		044121113	**820168**	87	Y
1.3		E		1272	ZF, ZA	M			05/72 ▸ 07/78		056121113D	**819868**	87	Y
1.3		E		1272	FY, FZ	M		☞10	09/78 ▸ 07/81		036121113	**819853**	87	Y
1.5		E		1471	ZC, ZB, YJ	M		☞4	03/73 ▸ 08/75		044121113	**820168**	87	Y
1.6,1.6 i	*8112, 8122*	E		1588	WY, YT, YP, YH, FS, YZ, YG YY, WP, YN, XX, YK, YS	M		☞4	09/73 ▸ 12/82		044121113	**820168**	87	Y
1.6,1.6 i	*8112, 8122*	E		1588	YP, YN, YK, YG, WY, YY, YH YT, YZ, WP, YS	M			09/75 ▸ 12/82		056121113D	**819868**	87	Y

• **New** Nouveau **Nuevo** Novo **Nuovo** Nieuw **Neu** Yeni Новый Nou

Type Ctr.		CC		AC			OE	Valeo	(°)C	
AUDI (.../...)										
80 (72>81) (.../...)										
1.6,1.6 i	E	1588	YH, YY, YT, YP, WZ, WY, YN WP	A		☞4	09/75 ▸ 07/81	044121113	**820168**	87	Y
1.6,1.6 i	E	1588	YN, WP, YP, YY, YH, WZ, YT WY	A			09/75 ▸ 07/81	056121113D	**819868**	87	Y
1.7 i	E	1715	WT	M			08/80 ▸ 07/81	056121113D	**819868**	87	Y
1.7 i	E	1715	WT	M		☞4	08/80 ▸ 07/81	044121113	**820168**	87	Y
2.2 i *8132*	E	2144	WE	M		☞4	10/80 ▸ 07/81	069121113	**820063**	87	Y
2.2 i *8132*	E	2144	WE	A		☞4	10/80 ▸ 07/81	069121113	**820063**	87	Y
80 (81>86)										
1.3 *811/0/1, 813/0/1/2*	E	1297	EP	M			08/81 ▸ 07/86	056121113D	**819868**	87	Y
1.3 *811/0/1, 813/0/1/2*	E	1297	EP	M		☞4	08/81 ▸ 07/86	044121113	**820168**	87	Y
1.6 *8122, 811/1/2/B/C, 813/0/1/2/B/C 814/0/1/2/B/C*	E	1588	YP, WV, YZ, WY	M		☞4	08/81 ▸ 07/86	044121113	**820168**	87	Y
1.6 *8122, 811/1/2/B/C, 813/0/1/2/B/C 814/0/1/2/B/C*	E	1588	WV, YP, YZ, WY	M			08/81 ▸ 07/86	056121113D	**819868**	87	Y
1.6 *811/1/2, 813/0/1/2, 814/0/2*	E	1588	WV, YP	A		☞4	08/81 ▸ 07/83	044121113	**820168**	87	Y
1.6 *811/1/2, 813/0/1/2, 814/0/2*	E	1588	WV, YP	A			08/81 ▸ 07/83	056121113D	**819868**	87	Y
1.6,1.6 i *811/0/1/2/G/H, 813/0/1/2 G/H/J, 814/0/1/2*	E	1595	DT, JU, SA	M		☞4	08/81 ▸ 03/87	044121113	**820168**	87	Y
1.6,1.6 i *811/0/1/2/G, 813/0/1/2/G H, 814/0/1/2*	E	1595	DT, JU	M			08/81 ▸ 08/86	056121113D	**819868**	87	Y
1.6,1.6 i *811/0/1/2/G/H, 813/0/1/2 G/H/J, 814/0/1/2*	E	1595	SA, DT, JU	A		☞4	08/81 ▸ 03/87	044121113	**820168**	87	Y
1.6 *811/0/1/2/G, 813/0/1/2, 814/0/1/2*	E	1595	DT, JU	A			08/81 ▸ 07/86	056121113D	**819868**	87	Y
1.7 i *8142, 813/1/2*	E	1715	WT	M			08/81 ▸ 07/83	056121113D	**819868**	87	Y
1.7 i *8142, 813/1/2*	E	1715	WT	M		☞4	08/81 ▸ 07/83	044121113	**820168**	87	Y
1.7 i *8132, 8142*	E	1715	WT	A			08/82 ▸ 07/83	056121113D	**819868**	87	Y
1.7 i *8132, 8142*	E	1715	WT	A		☞4	08/82 ▸ 07/83	044121113	**820168**	87	Y
1.8,1.8 i *811/0/1/2/5/B/C/G/H, 813 0/1/2/5/B/C/G/H, 814/0/1 2/B/C*	E	1781	DS, DZ, JV, NE, JN	M			08/81 ▸ 08/86	056121113D	**819868**	87	Y
1.8,1.8 i *811/0/1/2/5/B/C/G/H/L 813/0/1/2/5/8/B/C/G/H/J L, 814/0/1/2/5/8/B/C*	E	1781	DZ, JN, DS, SF, MU, JV, PV NE	M		☞4	08/81 ▸ 08/87	044121113	**820168**	87	Y
1.8 i *8145*	E	1781	MU	M		☞4	08/83 ▸ 07/84	069121113	**820063**	87	Y
1.8,1.8 i *811/1/2/G/H, 813/0/1/2/G H, 814/0/1/2*	E	1781	DS, JN, JV	A			08/81 ▸ 08/86	056121113D	**819868**	87	Y
1.8,1.8 i *811/1/2/G/H, 813/0/1/2/8 G/H/J, 814/0/1/2/8*	E	1781	JN, JV, SF, DS	A		☞4	08/81 ▸ 08/87	044121113	**820168**	87	Y
1.9 *8143, 813/2/3*	E	1921	WN	M		☞4	07/81 ▸ 08/86	069121113	**820063**	87	Y
1.9 *8133, 8143*	E	1921	WN	A		☞4	08/81 ▸ 07/83	069121113	**820063**	87	Y
2.0 i *811/0, 813/0/1/3, 8532, 814/0/3*	E	1994	JS, HP	M		☞4	08/82 ▸ 08/86	069121113	**820063**	87	Y
2.0 i *813/1/2/3, 814/2/3*	E	1994	HP, JS, JL	A		☞4	08/82 ▸ 07/84	069121113	**820063**	87	Y
2.2,2.2 i *8142, 813/2/3, 853/2/6*	E	2144	WE, KK, KL	M		☞4	08/81 ▸ 07/84	069121113	**820063**	87	Y
2.2 i *8132*	E	2144	WE	M			08/84 ▸ 07/86	056121113D	**819868**	87	Y
2.2 i *8132*	E	2144	WE	M		☞4	08/84 ▸ 07/86	044121113	**820168**	87	Y
2.2 i *8142, 813/2/3*	E	2144	WE	A		☞4	07/81 ▸ 07/83	069121113	**820063**	87	Y
2.2 i *8132*	E	2144	WE	A		☞4	08/83 ▸ 07/85	044121113	**820168**	87	Y
2.2 i *8132*	E	2144	WE	A			08/83 ▸ 07/85	056121113D	**819868**	87	Y
80 (86>91)										
1.4 *8930*	E	1405	SE	M			09/86 ▸ 07/88	056121113D	**819868**	87	Y
1.4 *8930*	E	1405	SE	M		☞4	09/86 ▸ 07/88	044121113	**820168**	87	Y
1.6,1.6 i *8940, 8A20, 893/0*	E	1595	PP, RN, RNA, ABB	M		☞4	09/86 ▸ 08/91	044121113	**820168**	87	Y
1.6,1.6 i *8940, 8A20, 893/0*	E	1595	RN, PP, ABB, RNA	M			09/86 ▸ 08/91	056121113D	**819868**	87	Y
1.6,1.6 i *8A20*	E	1595	ABB, RN	A		☞4	08/89 ▸ 08/91	044121113	**820168**	87	Y
1.6,1.6 i *8A20*	E	1595	RN, ABB	A			08/89 ▸ 08/91	056121113D	**819868**	87	Y
1.8,1.8 i *8940, 8A20, 893/0/0*	E	1781	RU, SF, PM, NE, JN, DZ, JV	M			09/86 ▸ 09/91	056121113D	**819868**	87	Y
1.8,1.8 i *8940, 8A20, 893/0/0*	E	1781	PM, DZ, NE, SF, JN, RU, JV	M		☞4	09/86 ▸ 09/91	044121113	**820168**	87	Y
1.8,1.8 i *8940, 8A20, 893/0/0*	E	1781	PM, SF, RU, JN, NE, JV	A		☞4	09/86 ▸ 08/91	044121113	**820168**	87	Y
1.8,1.8 i *8940, 8A20, 893/0/0*	E	1781	NE, SF, RU, JN, JV, PM	A			09/86 ▸ 08/91	056121113D	**819868**	87	Y
1.9 i *8948, 893/0/1*	E	1857	SD	M			08/86 ▸ 07/89	056121113D	**819868**	87	Y
1.9 i *8948, 893/0/1*	E	1857	SD	M		☞4	08/86 ▸ 07/89	044121113	**820168**	87	Y

• **New** Nouveau **Nuevo** Novo **Nuovo** Nieuw **Neu** Yeni Новый Nou

Type Ctr.		cc		AC		2 3	OE	Valeo	(°)C	
AUDI (.../...)										
80 (86>91) (.../...)										
1.9 i *893/0/1, 894/1/8*	E	1857	SD	A		☞4	08/86 ▸ 07/89	044121113	**820168**	87	Y
1.9 i *893/0/1, 894/1/8*	E	1857	SD	A			08/86 ▸ 07/89	056121113D	**819868**	87	Y
2.0 i,2.0 i 16V *8A20, 893/0/1/8*	E	1984	3A, 6A, AAD	M			08/88 ▸ 08/91	056121113D	**819868**	87	Y
2.0 i,2.0 i 16V *8948, 8A20, 893/0/1/8*	E	1984	3A, AAD, 6A	M		☞4	08/88 ▸ 09/91	044121113	**820168**	87	Y
2.0 i *8A20, 893/0/1/8*	E	1984	AAD, 3A	A		☞4	08/88 ▸ 08/91	044121113	**820168**	87	Y
2.0 i *8A20, 893/0/1/8*	E	1984	AAD, 3A	A			08/88 ▸ 08/91	056121113D	**819868**	87	Y
80 (91>95)										
1.6 i *8C20, 8C50*	E	1595	ADA, ABM, ABB	M		☞4	01/92 ▸ 07/95	044121113	**820168**	87	Y
1.6 i *8C20, 8C50*	E	1595	ABB, ABM, ADA	M			01/92 ▸ 07/95	056121113D	**819868**	87	Y
2.0 E,2.0 E 16V,2.0 S 2.0 i 16V *8C20, 8C50*	E	1984	ABK, ADW, ABT, ACE, 6A	M		☞4	09/91 ▸ 07/95	044121113	**820168**	87	Y
2.0 E,2.0 E 16V,2.0 S 2.0 i 16V *8C20, 8C50*	E	1984	ACE, ABK, ABT, 6A	M			09/91 ▸ 07/95	056121113D	**819868**	87	Y
2.0 E,2.0 S *8C20, 8C50*	E	1984	ABT, ABK	A			09/91 ▸ 07/95	056121113D	**819868**	87	Y
2.0 E,2.0 S *8C20, 8C50*	E	1984	ADW, ABT, ABK	A		☞4	09/91 ▸ 07/95	044121113	**820168**	87	Y
2.2 i Turbo 20V *8C27, 8C57*	E	2226	ABY	M		☞4	02/93 ▸ 06/95	069121113	**820063**	87	Y
2.3 E *8C27, 8C57*	E	2309	NG	M		☞4	09/91 ▸ 06/95	069121113	**820063**	87	Y
2.3 E *8C27*	E	2309	NG	A		☞4	09/91 ▸ 06/95	069121113	**820063**	87	Y
2.6 E V6 *8C27, 8C57*	E	2598	ABC, ACZ	M		☞2	07/92 ▸ 07/95	078121113F	**820027**	87	Y
2.6 E V6 *8C27, 8C57*	E	2598	ACZ, ABC	A		☞2	08/92 ▸ 07/95	078121113F	**820027**	87	Y
2.8 i V6 *8C27, 8C57*	E	2771	AAH	M		☞2	09/91 ▸ 07/95	078121113F	**820027**	87	Y
2.8 i V6 *8C27, 8C57*	E	2771	AAH	A		☞2	09/91 ▸ 07/95	078121113F	**820027**	87	Y
90 (84>87)										
2.0 i *8147, 813/7/K*	E	1994	HP, JS	M		☞4	10/84 ▸ 03/87	069121113	**820063**	87	Y
2.0 i *8147, 813/7/K*	E	1994	HP, JS, JL, SK	A		☞4	10/84 ▸ 03/87	069121113	**820063**	87	Y
2.2 i *8147, 813/7, 853/2/6/7/K*	E	2226	HY, JT, KV	M		☞4	08/84 ▸ 03/87	069121113	**820063**	87	Y
2.2 i *8137, 8147*	E	2226	HY, KV	A		☞4	06/84 ▸ 03/87	069121113	**820063**	87	Y
90 (87>91)										
2.0 i,2.0 i 20V *8947, 8A27, 893/2/7*	E	1994	PS, NM	M		☞4	04/87 ▸ 1992	069121113	**820063**	87	Y
2.0 i *8937, 8947*	E	1994	PS	A		☞4	08/87 ▸ 07/89	069121113	**820063**	87	Y
2.2 i *8947, 8A27, 893/7*	E	2226	KV	M		☞4	04/87 ▸ 1992	069121113	**820063**	87	Y
2.3 i,2.3 i 20V *894A, 8A27, 893/2/7*	E	2309	7A, NG	M		☞4	04/87 ▸ 1992	069121113	**820063**	87	Y
2.3 i,2.3 i 20V *893/2/7, 8A27, 894/2/7/A*	E	2309	7A, NG	A		☞4	08/87 ▸ 1992	069121113	**820063**	87	Y
100 (71>82)										
1.6 *431/0/1, 432/0/1, 433/0/1/2/B/C/T 434/0/1/2/B/C, 435/1/2, 436/1/2*	E	1588	YV	M			08/76 ▸ 12/82	056121113A	**819867**	80	Y
1.6 *431/0/1, 432/0/1, 433/0/1/2/B/C/T 434/0/1/2/B/C, 435/1/2, 436/1/2*	E	1588	YV	M		☞4	08/76 ▸ 12/82	044121113	**820168**	87	Y
1.6 *431/0/1, 432/0/1, 433/0/1/2/T, 434 0/1, 435/1/2, 436/1/2*	E	1588	YV	A			08/76 ▸ 07/82	056121113A	**819867**	80	Y
1.6 *431/0/1, 432/0/1, 433/0/1/2/T, 434 0/1, 435/1/2, 436/1/2*	E	1588	YV	A		☞4	08/76 ▸ 07/82	044121113	**820168**	87	Y
1.9 *431/0/1, 433/0/1/2/6/T, 434/0/1/2 4362, 4451, 435/1/2*	E	1921	WH	M		☞4	08/80 ▸ 07/82	069121113	**820063**	87	Y
2.0 *431/0/1, 432/0/1, 433/0/1/2, 434/0 1/2, 435/1/2, 436/1/2*	E	1984	WA	M		☞8	06/76 ▸ 07/82	059121113B	**819852**	83	Y
2.0 *431/0/1, 432/0/1, 433/0/1/2, 434/0 1/2, 435/1/2, 436/1/2*	E	1984	WA, WF	A		☞8	06/76 ▸ 07/82	059121113B	**819852**	83	Y
2.1,2.2,2.2 i *431/0/1, 432/0/1, 433/0/1 2/6/T, 434/0/1/2/6, 435/1 2/6, 436/1/2/6*	E	2144	WC, WG, WB, WE	M		☞4	06/76 ▸ 07/82	069121113	**820063**	87	Y
2.1,2.2 i *431/0/1, 432/0/1, 433/0/1 2, 434/0/1/2, 435/1/2 436/1/2*	E	2144	WE, WC	M			08/76 ▸ 05/77	056121113A	**819867**	80	Y
2.1,2.2,2.2 i *431/0/1, 432/0/1, 433/0/1 2/6/T, 434/0/1/2/6, 435/1 2/6, 436/1/2/6*	E	2144	WC, WB, WG, WE	A		☞4	06/76 ▸ 07/82	069121113	**820063**	87	Y
2.1, 2.2 i *431/0/1, 432/0/1, 433/0/1 2, 4352, 4362, 434/0/1/2*	E	2144	WC, WE	A			03/77 ▸ 05/77	056121113A	**819867**	80	Y

• **New** Nouveau **Nuevo** Novo **Nuovo** Nieuw **Neu** Yeni Новый Nou

Type Ctr.		CC		AC		2 3	OE	Valeo	(°)C	
AUDI (.../...)										
100 (71>82) (.../...)										
2.0 D,2.0 TD	*431/0/1, 433/0/1/2/6/T 434/0/1/2/6, 435/1/2/6 436/1/2/6*	D	1986	CN, DE	M	☞4	10/78 ▸ 07/82	069121113	**820063**	87	Y
2.0 D,2.0 TD	*431/1, 433/0/1/2/6/T, 435 1/2/6*	D	1986	DE, CN	A	☞4	10/78 ▸ 07/82	069121113	**820063**	87	Y
100 (82>90)										
1.8	*443/0/1/2/6/C/G/J/K/P, 444/0/2/6 445/0/1/6/G/P*	E	1781	DR, DS, SH, NP, JW, PH, 4B	M		08/82 ▸ 12/90	056121113D	**819868**	87	Y
1.8,1.8 i	*443/0/1/2/3/6/C/G/J/K/P 444/0/1/2/6, 445/0/1/2/6 G/J/K/P, 446/2/6*	E	1781	RS, JW, SH, PH, DR, DS, 4B NP	M	☞4	08/82 ▸ 12/90	044121113	**820168**	87	Y
1.8	*445/0/1/2/G/P*	E	1781	JW, DS	M	☞4	05/83 ▸ 07/89	069121113	**820063**	87	Y
1.8	*443/0/1/2/6/G/J/K/P, 444/0/6/P*	E	1781	DR, SH, DS	A		08/82 ▸ 07/89	056121113D	**819868**	87	Y
1.8,1.8 i	*443/0/1/2/6/G/J/K/P, 444 0/1/2/6/P, 445/0/1/2/6/G J/K/P, 446/2/6/P*	E	1781	DS, DR, PH, SH, 4B, JW	A	☞4	08/82 ▸ 12/90	044121113	**820168**	87	Y
1.8	*445G*	E	1781	JW	A	☞4	08/86 ▸ 12/87	069121113	**820063**	87	Y
1.9	*443/0/1/2/6, 444/0/1/6, 4462, 445/0 2*	E	1921	WH	M	☞4	08/82 ▸ 07/84	069121113	**820063**	87	Y
1.9	*443/0/1/2/6, 4452, 4462, 444/0/1/6*	E	1921	WH	A	☞4	08/82 ▸ 07/84	069121113	**820063**	87	Y
2.0 i	*443/0/2/6/G/J/K/P, 444/2/6/P, 445/0 2/6/G/J/K/P, 446/2/P*	E	1994	RT, SL, KP	M	☞4	08/84 ▸ 12/90	069121113	**820063**	87	Y
2.0 i	*446P*	E	1994	RT	M	☞4	08/89 ▸ 12/90	044121113	**820168**	87	Y
2.0 i	*4442*	E	1994	KP	A	☞4	08/84 ▸ 12/87	044121113	**820168**	87	Y
2.0 i	*443/0/2/6/G/J/K/P, 444/6/A/P, 445/0 2/6/G/J/K/P, 446/2/P*	E	1994	SL, KP, RT	A	☞4	08/84 ▸ 12/90	069121113	**820063**	87	Y
2.2,2.2 i	*443/0/1/2/6, 444/2/6, 445 0/1/2/5/6, 446/5/6*	E	2144	WC, WB	M	☞4	08/82 ▸ 07/90	069121113	**820063**	87	Y
2.2,2.2 i	*4442, 443/0/1/2/6, 445/0 1/2/5/6, 446/5/6*	E	2144	WC, WB	A	☞4	08/82 ▸ 07/90	069121113	**820063**	87	Y
2.2	*443C*	E	2200	PR	M	☞4	08/89 ▸ 12/90	069121113	**820063**	87	Y
2.2	*443C*	E	2200	PR	A	☞4	08/89 ▸ 12/90	069121113	**820063**	87	Y
2.2,2.2 Turbo,2.2 i 2.2 i Turbo	*443/0/1/2/3/5/6/D/G/H/J/K P/R, 444/5/6/8/D/H/P/R 445/0/2/5/6/D/G/H/J/K/P 446/5/6/8/D/H/P*	E	2226	KU, KF, MC, WU, KZ, HX, PX	M	☞4	08/82 ▸ 12/90	069121113	**820063**	87	Y
2.2 Turbo,2.2 i	*443/2, 446P, 445/2/6/J*	E	2226	HX, KU, WU, MC	M	☞4	08/83 ▸ 12/90	044121113	**820168**	87	Y
2.2 i	*445J*	E	2226	WU	M		08/83 ▸ 07/89	056121113D	**819868**	87	Y
2.2,2.2 Turbo,2.2 i 2.2 i Turbo	*443/0/1/2/5/6/7/8/B/D/G/H J/K/P/R, 444/2/5/6/7/8/B D/H/P/R, 445/0/2/5/6/7/D G/H/J/K/P, 446/6/8/B/H/P*	E	2226	KU, MC, HX, KZ, KF, WU	A	☞4	08/82 ▸ 12/90	069121113	**820063**	87	Y
2.2 i	*445/2/6*	E	2226	HX	A	☞4	08/84 ▸ 12/87	044121113	**820168**	87	Y
2.3 i	*443/G/H/J/K/M/P/R/U, 444/5/8/M/P 445/G/H/J/K/M/P/U, 446/8/M/P*	E	2309	NF	M	☞4	08/86 ▸ 12/90	069121113	**820063**	87	Y
2.3 i	*443/2/7/B/G/H/J/K/M/P/R/S/U, 444/2 5/7/8/B/M/N/P/S, 445/8/B/G/H/J/K/M P/U, 446/8/B/M/P*	E	2309	NF	A	☞4	08/86 ▸ 12/90	069121113	**820063**	87	Y
2.3 i	*446P*	E	2309	NF	A	☞4	01/88 ▸ 12/90	044121113	**820168**	87	Y
2.0 D,2.0 TD	*443/0/1/2/6/P, 444/0/1/2 P, 445/0/1/2/6/P, 446/2/P*	D	1986	CN, NC, DE	M	☞4	08/82 ▸ 12/90	069121113	**820063**	87	Y
2.0 D,2.0 TD	*443/0/1/2/6/P, 444/0/1/2 4462, 445/0/1/2/6/P*	D	1986	DE, CN, NC	A	☞4	08/82 ▸ 07/89	069121113	**820063**	87	Y
2.4 D	*443P, 445P*	D	2370	3D	M	☞4	08/90 ▸ 1991	069121113	**820063**	87	Y
2.5 TDi	*443P, 445P*	D	2460	1T	M	☞4	01/90 ▸ 12/90	069121113	**820063**	87	Y
100 (90>94)										
1.6,1.6 i	*4A20, 4A50*	E	1595	ADA, ABB	M	☞4	03/92 ▸ 07/94	044121113	**820168**	87	Y
1.6 i	*4A20, 4A50*	E	1595	ABB	M		03/92 ▸ 06/93	056121113D	**819868**	87	Y
2.0 16V,2.0 i,2.0 i 16V	*4A20, 4A50*	E	1984	ABK, AAD, AAE, ACE	M		12/90 ▸ 07/94	056121113D	**819868**	87	Y
2.0 16V,2.0 i,2.0 i 16V	*4A20, 4A50*	E	1984	ABK, AAD, AAE, ACE, ADW	M	☞4	12/90 ▸ 07/94	044121113	**820168**	87	Y
2.0 i	*4A20, 4A50*	E	1984	AAD, ABK, AAE	A		12/90 ▸ 07/94	056121113D	**819868**	87	Y
2.0 i	*4A20, 4A50*	E	1984	ABK, AAE, AAD, ADW	A	☞4	12/90 ▸ 07/94	044121113	**820168**	87	Y

• **New** Nouveau **Nuevo** Novo **Nuovo** Nieuw **Neu** Yeni Новый Nou

			CC		AC			OE	Valeo	(°)C		
AUDI (.../...)												
100 (90>94) (.../...)												
2.2 i Turbo 20V	*4A28, 4A58*	E	2226	AAN	M		☞4	08/91 ▸ 07/94	069121113	**820063**	87	Y
2.2 i Turbo 20V	*4A28, 4A58*	E	2226	AAN	A		☞4	08/91 ▸ 07/94	069121113	**820063**	87	Y
2.3 i	*4A20, 4A50*	E	2309	AAR	M		☞4	12/90 ▸ 07/94	069121113	**820063**	87	Y
2.3 i	*4A20, 4A50*	E	2309	AAR	A		☞4	12/90 ▸ 07/94	069121113	**820063**	87	Y
2.6 V6,2.6 i V6	*4A2/0/7, 4A5/0/7*	E	2598	ABC, ACZ	M		☞2	03/92 ▸ 07/94	078121113F	**820027**	87	Y
2.6 V6,2.6 i V6	*4A2/0/7, 4A5/0/7*	E	2598	ABC, ACZ	A		☞2	04/92 ▸ 07/94	078121113F	**820027**	87	Y
2.8 i V6	*4A50, 4A2/0/7*	E	2771	AAH	M		☞2	12/90 ▸ 07/94	078121113F	**820027**	87	Y
2.8 i V6	*4A20, 4A50*	E	2771	AAH	A		☞2	12/90 ▸ 07/94	078121113F	**820027**	87	Y
4.2 i V8 32V	*4A28, 4A58*	E	4172	ABH	M		☞2	10/92 ▸ 07/94	078121113F	**820027**	87	Y
2.4 D	*4A20, 4A50*	D	2370	AAS	M		☞4	05/91 ▸ 07/94	069121113	**820063**	87	Y
2.4 D	*4A20*	D	2370	AAS	A		☞4	12/90 ▸ 07/91	069121113	**820063**	87	Y
2.5 TDi	*4A20, 4A50*	D	2460	AAT, ABP	M		☞4	06/91 ▸ 07/94	069121113	**820063**	87	Y
2.5 TDi	*4A20, 4A50*	D	2460	AAT	A		☞4	01/93 ▸ 07/94	069121113	**820063**	87	Y
200												
2.1,2.1 Turbo	*4382, 437/2, 447/1/6, 448 1/6*	E	2144	WC, KG, WJ, JY, WK	M		☞4	10/79 ▸ 01/88	069121113	**820063**	87	Y
2.1,2.1 Turbo	*4382, 437/2/5, 4481, 447 1/4/G*	E	2144	KG, KH, WC, WJ, WK, WS, KJ JY	A		☞4	10/79 ▸ 01/88	069121113	**820063**	87	Y
2.2,2.2 Turbo	*447/1/4/B/D/G/H/J/P/R/S 448/1/D/P*	E	2226	MC, 1B, KU	M		☞4	08/84 ▸ 12/90	069121113	**820063**	87	Y
2.2,2.2 Turbo	*447/1/4/B/G/J/P, 448/1/9 M/P*	E	2226	2B, KU, MC	A		☞4	08/84 ▸ 12/90	069121113	**820063**	87	Y
2.3 Turbo 20V	*445D, 447P*	E	2309	3B	M		☞4	08/88 ▸ 12/90	069121113	**820063**	87	Y
A2												
1.4 i 16V	*8Z00*	E	1390	BBY, AUA	M			06/00 ▸	032121110B	**820962**	87	Y
1.2 TDi	*8Z0/D/E*	D	1191	ANY	M		☞4	04/01 ▸	044121113	**820168**	87	Y
1.4 TDi	*8Z00*	D	1422	AMF, BHC, ATL	M		☞4	06/00 ▸	044121113	**820168**	87	Y
A3 (96>2003)												
1.6 i	*8L1/0/A/B/C/H*	E	1595	AKL, AEH, AVU, BFQ	M			09/96 ▸	050121113C	**820171**	87	Y
1.6 i	*8L1/0/A/B/C/H*	E	1595	BFQ, AVU, AKL, AEH	A			09/96 ▸	050121113C	**820171**	87	Y
1.6 i	*8L1/A/B/C*	E	1595	APF, AVU, BFQ	A			08/98 ▸	06A121111A	**820959**	100	Y
1.8 i 20V,1.8 i Turbo 20V	*8L1/0/A/B/C/H*	E	1781	AJQ, AQA, APG, AGU, AUQ, AGN AUM, ARX, APP, ARZ, ARY	M			09/96 ▸	050121113C	**820171**	87	Y
1.8 i 20V,1.8 i Turbo 20V	*8L1/0/A/B/C/H*	E	1781	ARX, AUQ, AGN, AGU, AJQ, ARY APG, AQA, AUM, ARZ	A			09/96 ▸	050121113C	**820171**	87	Y
1.9 TDi	*8L1/0/A/B/C/H*	D	1896	ALH, ASZ, AXR, ASV, AHF, AGR ATD	M		☞4	09/96 ▸	044121113	**820168**	87	Y
1.9 TDi	*8L1/0/A/B/C/H*	D	1896	ATD, AHF, ALH, ASZ, AGR, ASV	A		☞4	09/96 ▸	044121113	**820168**	87	Y
A3 (2003>2008)												
1.6 i	*8P1/A/B/C, 8PA/A/B/C*	E	1595	BSF, BSE, BGU	M			05/03 ▸	050121113C	**820171**	87	Y
1.6 i	*8P1/A/B/C, 8PA/A/B/C*	E	1595	BSF, BGU, BSE	A			09/03 ▸	050121113C	**820171**	87	Y
A3(2003>2008)												
1.6 FSi	*8P1A, 8P1B, 8P1C*	E	1598	BAG	M			08/03 ▸ 05/04	06F121111	**820576**	105	Y
2.0 FSi 16V	*8P1C, 8P1A, 8PAB, 8PAC 8P1B, 8PAA*	E	1984	AXW,BLR,BLX,BLY,BMB	A			05/03 ▸ 11/05	06F121111	**820576**	105	Y
2.0 FSi 16V	*8P1A, 8PAB, 8PAA, 8PAC 8P1C, 8P1B*	E	1984	AXW,BLR,BLX,BLY,BMB	M			05/03 ▸ 10/05	06F121111	**820576**	105	Y
A3 (2003>2008)												
3.2 i V6 24V	*8P1B, 8PAB*	E	3189	BUB, BDB, BMJ	M			07/03 ▸	022121113	**820958**	80	Y
3.2 i V6 24V	*8P1B, 8PAB*	E	3189	BMJ, BUB, BDB	A			07/03 ▸	022121113	**820958**	80	Y
1.9 TDi	*8P1/A/B/C/E, 8PA/A/B/C/E*	D	1896	BXE, BKC, BLS	M		☞4	06/03 ▸	044121113	**820168**	87	Y
1.9 TDi	*8P1/A/B/C, 8PA/A/B/C*	D	1896	BLS, BXE, BKC	A		☞4	03/06 ▸	044121113	**820168**	87	Y
2.0 TDi 16V	*8P1/A/B/C, 8PA/A/B/C/Z*	D	1968	BUY, AZV, BKD, BMN	M			05/03 ▸	03G121113	**820058**	88	Y
2.0 TDi	*8P1/A/B/C, 8PA/A/B/C*	D	1968	BMM	M		☞4	01/05 ▸	03G121113A	**820168**	87	Y
2.0 TDi 16V	*8P1/A/B/C, 8PA/A/B/C*	D	1968	BKD, BMN, BUY, AZV	A			05/03 ▸	03G121113	**820058**	88	Y
2.0 TDi	*8P1/A/B/C, 8PA/A/B/C*	D	1968	BMM	A		☞4	06/05 ▸	03G121113A	**820168**	87	Y
A4 (94>98)												
1.6 i	*8D2/0/H, 8D5/0/H*	E	1595	AHL, ADP, ANA, ARM	M			11/94 ▸ 12/98	050121113C	**820171**	87	Y

• **New** Nouveau **Nuevo** Novo **Nuovo** Nieuw **Neu** Yeni Новый Nou

		E	1595	ANA, AHL, ADP	A			11/94 ▸ 12/98	050121113C	**820171**	87	Y
1.8 i 20V,1.8 i Turbo 20V	*8D2/0/H/S/T, 8D5/0/H/S*	E	1781	AEB, ADR, APU, AFY, ARG, AJL ARK	M			11/94 ▸ 12/98	050121113C	**820171**	87	Y
1.8 i 20V,1.8 i Turbo 20V	*8D2/0/H/S, 8D5/0/H/S*	E	1781	ADR, AEB, AFY, APU, ARG, ARK	A			11/94 ▸ 12/98	050121113C	**820171**	87	Y
2.4 i V6,2.4 i V6 30V	*8D2/0/H/S, 8D5/0/H*	E	2393	ALF, AGA, APS, APZ, ARJ, AML AFM, AJG	M		☞2	07/95 ▸ 12/98	078121113F	**820027**	87	Y
2.4 i V6,2.4 i V6 30V	*8D50, 8D2/0/H/S*	E	2393	AJG, ALF, AML, AGA, APS, APZ ARJ	A		☞2	08/97 ▸ 12/98	078121113F	**820027**	87	Y
2.6 i V6	*8D2/0/H/S, 8D5/0/H/S*	E	2598	ACZ, ABC	M		☞2	11/94 ▸ 12/98	078121113F	**820027**	87	Y
2.6 i V6	*8D2/0/H/S, 8D5/0/H/S*	E	2598	ABC, ACZ	A		☞2	11/94 ▸ 07/98	078121113F	**820027**	87	Y
2.8 i V6,2.8 i V6 30V	*8D2/0/H/S, 8D5/0/H*	E	2771	AAH, ACK, ALG, APR, AMX, AQD	M		☞2	11/94 ▸ 12/98	078121113F	**820027**	87	Y
2.8 i V6,2.8 i V6 30V	*8D2/0/H/S, 8D5/0/H*	E	2771	ACK, AAH, APR, AQD, AMX, ALG	A		☞2	02/95 ▸ 12/98	078121113F	**820027**	87	Y
1.9 TDi	*8D2/0/H, 8D5/0/H*	D	1896	AFF, AFN, 1Z, AJM, AHU, AHH	M		☞4	11/94 ▸ 12/98	044121113	**820168**	87	Y
1.9 TDi	*8D2/0/H, 8D5/0/H*	D	1896	1Z, AFN, AHU, AJM	A		☞4	01/95 ▸ 12/98	044121113	**820168**	87	Y
2.5 TDi V6 24V	*8D20, 8D50*	D	2496	AKN, AFB	M		☞2	11/97 ▸ 12/98	078121113F	**820027**	87	Y
2.5 TDi V6 24V	*8D20, 8D50*	D	2496	AFB, AKN	A		☞2	11/97 ▸ 12/98	078121113F	**820027**	87	Y
A4 (99>2001)												
1.6 i	*8D20, 8D50*	E	1595	AHL, ARM, ANA	M			01/99 ▸ 11/00	050121113C	**820171**	87	Y
1.6 i	*8D20, 8D50*	E	1595	AHL, ANA, ARM	A			01/99 ▸ 11/00	050121113C	**820171**	87	Y
1.6 i ▸ 8D-X-315 000	*8D50*	E	1595	AHL	M		☞2	01/99 ▸ 06/99	078121113F	**820027**	87	Y
1.6 i 8D-X-315 001 ▸	*8D50*	E	1595	AHL	M			06/99 ▸ 11/00	078121113G	**820414**	92	Y
1.8 i 20V,1.8 i Turbo 20V	*8D2/0/S/T, 8D5/0/S*	E	1781	ADR, ARG, APT, ANB, APU, ARK AJL, AFY, AWT	M			01/99 ▸ 11/00	050121113C	**820171**	87	Y
1.8 i 20V,1.8 i Turbo 20V	*8D20*	E	1781	ADR, AJL, AFY, ARG	M		☞2	02/99 ▸ 11/00	078121113F	**820027**	87	Y
1.8 i 20V,1.8 i Turbo 20V	*8D2/0/S, 8D5/0/S*	E	1781	ADR, APT, APU, ARG, ANB, AFY	A			01/99 ▸ 11/00	050121113C	**820171**	87	Y
1.8 i 20V,1.8 i Turbo 20V ▸ 8D-X-315001 ▸	*8D20*	E	1781	ANB,ARG	M			02/99 ▸ 06/00	078121113G	**820414**	92	Y
2.4 i V6 30V ▸ 8D-X-315 000	*8D2/0/S, 8D5/0/S*	E	2393	APS, ARJ, APZ	A		☞2	02/99 ▸ 06/99	078121113F	**820027**	87	Y
2.4 i V6 30V ▸ 8D-X-315 000	*8D2/0/S, 8D5/0/S*	E	2393	APZ, AML, APS, ARJ	M		☞2	02/99 ▸ 06/99	078121113F	**820027**	87	Y
2.4 i V6 30V	*8D5S, 8D50, 8D20, 8D2S*	E	2393	APS,APZ,ARJ	A			02/99 ▸ 11/00	078121113G	**820414**	92	Y
2.4 i V6 30V	*8D50, 8D20, 8D2S, 8D5S*	E	2393	AML,APS,APZ,ARJ	M			02/99 ▸ 11/00	078121113G	**820414**	92	Y
2.7 i V6 30V	*8D20*	E	2671	AGB	M		☞2	02/99 ▸ 10/00	078121113F	**820027**	87	Y
2.8 i V6 30V ▸ 8D-X-315 000	*8D50, 8D2/0/S*	E	2771	ATX, AQD, AMX, APR	M		☞2	01/99 ▸ 06/99	078121113F	**820027**	87	Y
2.8 i V6 30V ▸ 8D-X-315000	*8D50, 8D2/0/S*	E	2771	APR, AQD, ATX, AMX	A		☞2	01/99 ▸ 06/99	078121113F	**820027**	87	Y
2.8 i V6 30V	*8D50, 8D2S, 8D20*	E	2771	AMX,APR,AQD,ATX	A			01/99 ▸ 11/00	078121113G	**820414**	92	Y
2.8 i V6 30V	*8D20, 8D50, 8D2S*	E	2771	AMX,APR,AQD,ATX	M			01/99 ▸ 11/00	078121113G	**820414**	92	Y
1.9 TDi	*8D20*	D	1896	ATJ	M			01/00 ▸ 10/00	050121113C	**820171**	87	Y
1.9 TDi	*8D20, 8D50*	D	1896	AFN, AHU, AVG, AHH, AJM	M		☞4	01/99 ▸ 11/00	044121113	**820168**	87	Y
1.9 TDi	*8D20, 8D50*	D	1896	AJM, AHU, AFN	A		☞4	01/99 ▸ 09/01	044121113	**820168**	87	Y
2.5 TDi V6 24V	*8D20, 8D50*	D	2496	AFB, AKN	M		☞2	01/99 ▸ 11/00	078121113F	**820027**	87	Y
2.5 TDi V6 24V	*8D20, 8D50*	D	2496	AFB, AKN	A		☞2	01/99 ▸ 11/00	078121113F	**820027**	87	Y
2.5 TDi V6 24V ▸ 8D-X-315001 ▸	*8D20, 8D50*	D	2496	AFB,AKN	A			02/99 ▸ 11/00	078121113G	**820414**	92	Y
2.5 TDi V6 24V ▸ 8D-X-315001 ▸	*8D50, 8D20*	D	2496	AFB,AKN	M			02/99 ▸ 11/00	078121113G	**820414**	92	Y
A4 (2000>2004)												
1.8 i Turbo 20V	*8E25*	E	1781	AMB	M		☞4	09/01 ▸ 06/02	044121113	**820168**	87	Y
1.8 i Turbo 20V	*8E2/0/5, 8E5/0/5*	E	1781	AMB	A		☞4	07/01 ▸ 12/04	044121113	**820168**	87	Y
1.8 i Turbo 20V	*8E20, 8E55, 8E50, 8E25*	E	1781	AMB,AVJ,BEX,BFB	A			04/01 ▸	06B121111D	**820567**	100	Y
1.8 i Turbo 20V	*8E20, 8E50, 8E25*	E	1781	AMB,AVJ,BEX,BFB	M			12/00 ▸	06B121111G	**820567**	100	Y
2.0 i 20V ▸ 8D-1-200000	*8E20*	E	1984	ALT	M			12/00 ▸ 09/01	050121113C	**820171**	87	Y
2.0 i 20V ▸ 8D-1-200000	*8E20*	E	1984	ALT	A			12/00 ▸ 09/01	050121113C	**820171**	87	Y
2.0 i 20V 8E-1-000001 ▸	*8E20, 8E50*	E	1984	ALT	A			09/01 ▸	06B121111D	**820567**	100	Y

• **New** Nouveau **Nuevo** Novo **Nuovo** Nieuw **Neu** Yeni Новый Nou

Type Ctr.		CC		AC		2 3	OE	Valeo	(°)C	
AUDI (.../...)										
A6 (97>2001) (.../...)										
1.8 i Turbo 20V 4B-X-160 001 ▸	4B20, 4B50	E	1781	APU	M		11/98 ▸ 05/01	078121113G	**820414**	92	Y
2.4 i V6,2.4 i V6 30V ▸ 4B-X-160 000	4B2/0/H, 4B5/0/H	E	2393	ARJ, APZ, ALF, AJG, AGA, APS ALW, APC, ARN	M	☞2	04/97 ▸ 06/99	078121113F	**820027**	87	Y
2.4 i V6,2.4 i V6 30V ▸ 4B-X-160 000	4B2/0/H, 4B5/0/H	E	2393	ALF, ARJ, APC, AJG, APZ, APS AGA	A	☞2	04/97 ▸ 06/99	078121113F	**820027**	87	Y
2.4 i V6,2.4 i V6 30V X-160 001 ▸	4B20, 4B50	E	2393	AML,AMM,APC,APS,APZ,ARJ	A		08/98 ▸ 05/01	078121113G	**820414**	92	Y
2.4 i V6,2.4 i V6 30V X-160 001 ▸	4B50, 4B20	E	2393	AML,AMM,APC,APS,APZ,ARJ,ARN ASM	M		11/98 ▸ 05/01	078121113G	**820414**	92	Y
2.7 i V6 Bi turbo	4B2/0/H, 4B5/0/H	E	2671	AZA, AJK	M	☞2	01/98 ▸ 05/01	078121113F	**820027**	87	Y
2.7 i V6 Bi turbo	4B20, 4B50	E	2671	AJK, AZA	A	☞2	02/99 ▸ 05/01	078121113F	**820027**	87	Y
2.8 i V6 30V ▸ X-160000	4B2/0/H, 4B5/0/H	E	2771	APR, ACK, AQD, ALG, AGE	M	☞2	04/97 ▸ 06/99	078121113F	**820027**	87	Y
2.8 i V6 30V ▸ X-160000	4B2/0/H, 4B5/0/H	E	2771	ALG, APR, ACK, AGE, AQD	A	☞2	04/97 ▸ 06/99	078121113F	**820027**	87	Y
2.8 i V6 30V	4B50, 4B20	E	2771	AGE,AMX,APR,AQD,ATX	A		08/98 ▸ 05/01	078121113G	**820414**	92	Y
2.8 i V6 30V X-160 001 ▸	4B50, 4B20	E	2771	AGE,AMX,APR,AQD,ATX	M		04/98 ▸ 05/01	078121113G	**820414**	92	Y
4.2 i V8 40V ▸ X-160000	4B40, 4B60	E	4172	ARS	A	☞2	04/99 ▸ 06/99	078121113F	**820027**	87	Y
4.2 i V8 40V 4B-X-160 001 ▸	4B60, 4B40	E	4172	ARS	A		04/99 ▸ 05/01	078121113G	**820414**	92	Y
4.2 i V8 40V	4B60, 4B40	E	4172	ARS,ASG	A		04/99 ▸ 05/01	077121113B	**820415**	87	Y
1.9 TDi	4B2/0/H, 4B5/0/H	D	1896	AFN, AJM, AVG	M	☞4	04/97 ▸ 05/01	044121113	**820168**	87	Y
1.9 TDi	4B2/0/H, 4B5/0/H	D	1896	AFN, AJM, AVG	A	☞4	04/97 ▸ 05/01	044121113	**820168**	87	Y
2.5 TDi V6 24V	4B2/0/H, 4B5/0/H	D	2496	AFB, AKN, AKE	M	☞2	04/97 ▸ 05/01	078121113F	**820027**	87	Y
2.5 TDi V6 24V	4B2/0/H, 4B5/0/H	D	2496	AFB, AKN, AKE	A	☞2	07/97 ▸ 05/01	078121113F	**820027**	87	Y
2.5 TDi V6 24V 4B-X-160 001 ▸	4B50	D	2496	AFB	A		08/98 ▸ 05/01	078121113G	**820414**	92	Y
2.5 TDi V6 24V 4B-X-160 001 ▸	4B50	D	2496	AFB	M		02/98 ▸ 05/01	078121113G	**820414**	92	Y
A6 (2001>2004)										
1.8 i Turbo 20V	4B20, 4B50	E	1781	AWT	M		06/01 ▸	050121113C	**820171**	87	Y
1.8 i Turbo 20V	4B20, 4B50	E	1781	AWT	A		06/01 ▸	050121113C	**820171**	87	Y
2.0 i 20V	4B50, 4B20	E	1984	ALT	A		06/01 ▸	06B121111G	**820567**	100	Y
2.0 i 20V	4B50, 4B20	E	1984	ALT	M		06/01 ▸	06B121111G	**820567**	100	Y
2.7 i V6 Bi Turbo	4B20, 4B50	E	2671	ARE, BES	M	☞2	06/01 ▸	078121113F	**820027**	87	Y
2.7 i V6 Bi Turbo	4B20, 4B50	E	2671	ARE, BES	A	☞2	06/01 ▸	078121113F	**820027**	87	Y
2.4 i V6 30V	4B50, 4B20	E	2393	AMM,BDV	A		06/01 ▸ 04/05	078121113G	**820414**	92	Y
2.4 i V6 30V	4B20, 4B50	E	2393	AMM,ASM,BDV	M		06/01 ▸ 04/05	078121113G	**820414**	92	Y
4.2 i V8 40V	4B60, 4B40	E	4172	ASG	A		06/01 ▸	077121113B	**820415**	87	Y
1.9 TDi	4B20, 4B50	D	1896	AWX, AVF	M	☞4	06/01 ▸	044121113	**820168**	87	Y
1.9 TDi	4B20, 4B50	D	1896	AVF, AWX	A	☞4	06/01 ▸	044121113	**820168**	87	Y
2.5 TDi V6,2.5 TDi V6 24V	4B20, 4B50	D	2496	BDG, BAU, AKE, BFC, BCZ, BDH AYM	M	☞2	06/01 ▸	078121113F	**820027**	87	Y
2.5 TDi V6,2.5 TDi V6 24V	4B20, 4B50	D	2496	BAU, AKE, BCZ, BFC, BDG, AYM BDH	A	☞2	06/01 ▸	078121113F	**820027**	87	Y
A6 (2004>)										
2.0 TDi 16V	4F20, 4F50	D	1968	BLB, BRF, BRE, BVG, BNA	M		07/04 ▸	03G121113	**820058**	88	Y
2.0 TDi 16V	4F20, 4F50	D	1968	BRE	A		10/05 ▸	03G121113	**820058**	88	Y
A6 Allroad (2000>2005)										
2.7 i V6 Turbo	4BH0	E	2671	BES, ARE	M	☞2	05/00 ▸	078121113F	**820027**	87	Y
2.7 i V6 Turbo	4BH0	E	2671	ARE, BES	A	☞2	05/00 ▸	078121113F	**820027**	87	Y
2.5 TDi V6 24V	4BH0	D	2496	BAU, AKE, BCZ	M	☞2	05/00 ▸	078121113F	**820027**	87	Y
2.5 TDi V6 24V	4BH0	D	2496	AKE, BAU	A	☞2	05/00 ▸	078121113F	**820027**	87	Y
A8 (94>2002)										
2.8 E V6,2.8 E V6 30V 2.8 i V6 4D-X-009 500 ▸	4D2G	E	2771	ALG, AAH, APR, AQD, ACK, AEJ	A	☞2	06/94 ▸ 04/99	078121113F	**820027**	87	Y

• **New** Nouveau **Nuevo** Novo **Nuovo** Nieuw **Neu** Yeni Новый Nou

			Type Ctr.		CC		AC		2 3	OE	Valeo	(°)C	
AUDI (.../...)													
A8 (94>2002) (.../...)													
2.8 E V6,2.8 E V6 30V 2.8 i V6 ▸X-009500	4D2G	E	2771	ACK, AAH, AEJ, AQD, ALG, APR	M		☞2	06/94 ▸ 04/99	078121113F	**820027**	87	Y
2.8 E V6 30V X-009 501 ▸	4D2G	E	2771	AMX,APR,AQD	A			10/98 ▸ 09/02	078121113G	**820414**	92	Y
2.8 E V6 30V X-009 501 ▸	4D2G	E	2771	AMX,APR,AQD	M			10/98 ▸ 09/02	078121113G	**820414**	92	Y
3.7 i V8	4D2G	E	3697	AKJ, AEW	A		☞2	10/95 ▸ 12/98	078121113F	**820027**	87	Y
3.7 i V8	4D2G	E	3697	AKC, AQG	A			10/98 ▸ 09/02	077121113C	**820557**	82	Y
4.2 i V8,4.2 i V8 32V	4D2G	E	4172	AEM, ABZ, AGH, AKG	A		☞2	06/94 ▸ 12/98	078121113F	**820027**	87	Y
4.2 i V8,4.2 i V8 32V	4D8G, 4D2/2/G	E	4172	ARU, AUW, AQF, ABZ	A			10/98 ▸ 09/02	077121113C	**820557**	82	Y
2.5 TDi V6 24V	4D2G	D	2496	AKN, AFB, AKE	M		☞2	06/97 ▸ 09/02	078121113F	**820027**	87	Y
2.5 TDi V6 24V	4D2G	D	2496	AKN, AFB, AKE	A		☞2	06/97 ▸ 09/02	078121113F	**820027**	87	Y
3.3 TDi V8	4D2G	D	3328	AKF	A		☞2	12/99 ▸ 09/02	078121113F	**820027**	87	Y
A8 (2002>2007)													
3.7 i V8	4E20	E	3697	BFL	A			11/02 ▸ 05/06	077121113C	**820557**	82	Y
4.2 i V8 40V	4E20, 4E80	E	4172	BFM	A			11/02 ▸ 05/06	077121113C	**820557**	82	Y
Cabriolet													
1.8 E 20V	8G70	E	1781	ADR	M			04/97 ▸ 08/00	050121113C	**820171**	87	Y
1.8 E 20V	8G70	E	1781	ADR	A			04/97 ▸	050121113C	**820171**	87	Y
2.0 E,2.0 E 16V	8G70	E	1984	ABK, ACE	M		☞4	01/93 ▸ 07/98	044121113	**820168**	87	Y
2.0 E,2.0 E 16V	8G70	E	1984	ACE, ABK	M			01/93 ▸ 07/96	056121113D	**819868**	87	Y
2.0 E	8G70	E	1984	ABK	M			01/97 ▸	050121113C	**820171**	87	Y
2.3 E	8G70	E	2309	NG	M		☞4	06/91 ▸ 07/94	069121113	**820063**	87	Y
2.3 E	8G70	E	2309	NG	A		☞4	06/91 ▸ 07/94	069121113	**820063**	87	Y
2.6 E V6	8G70	E	2598	ACZ, ABC	M		☞2	01/94 ▸ 08/00	078121113F	**820027**	87	Y
2.6 E V6	8G70	E	2598	ABC, ACZ	A		☞2	01/94 ▸ 08/00	078121113F	**820027**	87	Y
2.8 i V6	8G70	E	2771	AAH	M		☞2	11/92 ▸ 08/00	078121113F	**820027**	87	Y
2.8 i V6	8G70	E	2771	AAH	A		☞2	01/93 ▸ 08/00	078121113F	**820027**	87	Y
1.9 TDi	8G70	D	1896	AHU, 1Z	M		☞4	07/95 ▸ 08/00	044121113	**820168**	87	Y
Coupé (80>88)													
1.6	8550, 8560	E	1588	DD, YN	M			02/81 ▸ 08/82	056121113D	**819868**	87	Y
1.6	8550, 8560	E	1588	DD, YN	M		☞4	02/81 ▸ 08/82	044121113	**820168**	87	Y
1.6	8550	E	1588	YN, DD	A		☞4	02/81 ▸ 08/82	044121113	**820168**	87	Y
1.6	8550	E	1588	YN, DD	A			02/81 ▸ 08/82	056121113D	**819868**	87	Y
1.8,1.8 i	855/0/3/J/K, 856/0/3	E	1781	DZ, JV, DS, JN, SF	M		☞4	09/82 ▸ 07/88	044121113	**820168**	87	Y
1.8,1.8 i	855/0/3/J/K, 856/0/3	E	1781	DS, JN, JV, DZ, SF	M			09/82 ▸ 07/88	056121113D	**819868**	87	Y
1.8,1.8 i	855/0/3/J/K	E	1781	JV, DS, JN, SF	A		☞4	09/82 ▸ 07/88	044121113	**820168**	87	Y
1.8,1.8 i	855/0/3/J/K	E	1781	DS, JV, JN, SF	A			09/82 ▸ 07/88	056121113D	**819868**	87	Y
1.9	8553, 8563	E	1921	WN	M		☞4	10/80 ▸ 08/83	069121113	**820063**	87	Y
1.9	8553, 8563	E	1921	WN	A		☞4	10/80 ▸ 08/83	069121113	**820063**	87	Y
2.0 i	8563, 855/3/K	E	1994	HP, JS	M		☞4	08/83 ▸ 07/86	069121113	**820063**	87	Y
2.0 i	8563, 855/3/K	E	1994	JS, HP, JL	A		☞4	08/83 ▸ 07/87	069121113	**820063**	87	Y
2.2 i	8553, 8563	E	2144	KL, KE, WE	M		☞4	08/81 ▸ 08/84	069121113	**820063**	87	Y
2.2 i	8553	E	2144	WE	A		☞4	04/81 ▸ 08/83	069121113	**820063**	87	Y
2.2,2.2 i	8563, 855/3/9/K	E	2226	KV, KX, HY, JT	M		☞4	08/84 ▸ 07/88	069121113	**820063**	87	Y
2.2 i	8563, 855/3/9/K	E	2226	HY, KV, KX	A		☞4	08/84 ▸ 07/88	069121113	**820063**	87	Y
2.3 E,2.3 i	855K	E	2309	NG	M		☞4	01/87 ▸ 07/88	069121113	**820063**	87	Y
2.3 i	855K	E	2309	NG	A		☞4	02/87 ▸ 07/88	069121113	**820063**	87	Y
Coupé (88>96)													
1.8 E	8B30	E	1781	DZ	M			08/89 ▸ 07/91	056121113D	**819868**	87	Y
1.8 E	8B30	E	1781	DZ	M		☞4	08/89 ▸ 07/91	044121113	**820168**	87	Y
2.0 E,2.0 E 16V,2.0 i 2.0 i 16V	8B30	E	1984	AAD, ABK, 3A, ACE, 6A	M		☞4	08/89 ▸ 01/96	044121113	**820168**	87	Y
2.0 E,2.0 i,2.0 i 16V	8B30	E	1984	ABK, AAD, 3A, 6A	M			08/89 ▸ 01/96	056121113D	**819868**	87	Y
2.0 E,2.0 i	8B30	E	1984	AAD, 3A, ABK	A		☞4	08/89 ▸ 01/96	044121113	**820168**	87	Y
2.0 E,2.0 i	8B30	E	1984	ABK, 3A, AAD	A			08/89 ▸ 01/96	056121113D	**819868**	87	Y
2.0 E 20V	8B30	E	1994	NM	M		☞4	11/88 ▸ 07/91	069121113	**820063**	87	Y
2.2 i,2.2 i Turbo 20V	8B30	E	2226	ABY, KV	M		☞4	11/88 ▸ 05/95	069121113	**820063**	87	Y

• **New** Nouveau **Nuevo** Novo **Nuovo** Nieuw **Neu** Yeni Новый Nou

Type Ctr.		CC		AC		2 3	OE	Valeo	(°)C	
AUDI (.../...)										
Coupé (88>96) (.../...)										
2.3 E,2.3 Turbo 20V 2.3 i 20V *8B30*	E	2309	3B, NG, 7A	M		☞4	11/88 ▸ 07/94	069121113	**820063**	87	Y
2.3 E,2.3 i 20V *8B30*	E	2309	NG, 7A	A		☞4	08/89 ▸ 07/93	069121113	**820063**	87	Y
2.6 E V6 *8B30*	E	2598	ABC	M		☞2	08/92 ▸ 01/96	078121113F	**820027**	87	Y
2.6 E V6 *8B30*	E	2598	ABC	A		☞2	08/92 ▸ 01/96	078121113F	**820027**	87	Y
2.8 i V6 *8B30*	E	2771	AAH	M		☞2	08/91 ▸ 05/95	078121113F	**820027**	87	Y
2.8 i V6 *8B30*	E	2771	AAH	A		☞2	09/91 ▸ 03/95	078121113F	**820027**	87	Y
Quattro										
2.2 i Turbo *8591, 857/0/1/2/3/6/7*	E	2144	WX, KW, WR, GV	M		☞4	07/80 ▸ 07/89	069121113	**820063**	87	Y
2.2 i Turbo *857/0/1/2/3/6/7*	E	2144	WR, WX, GV	A		☞4	07/80 ▸ 07/89	069121113	**820063**	87	Y
2.3 i Turbo 2.3 i Turbo 20V *857/0/1*	E	2226	RR, MB	M		☞4	08/87 ▸ 07/91	069121113	**820063**	87	Y
2.3 i Turbo 2.3 i Turbo 20V *857/0/1*	E	2226	RR, MB	A		☞4	08/87 ▸ 07/91	069121113	**820063**	87	Y
RS2 (94>95)										
2.2 Turbo *8C57*	E	2226	ADU	A			03/94 ▸ 06/95	069121113	**820063**	87	Y
2.2 Turbo *8C57*	E	2226	ADU	M		☞4	03/94 ▸ 06/95	069121113	**820063**	87	Y
RS4 Quattro (2000>2001)										
2.7 i V6 Bi Turbo 30V *8D50*	E	2671	ASJ	M		☞2	06/00 ▸ 10/00	078121113F	**820027**	87	Y
2.8 i V6 Bi Turbo 30V *8D50*	E	2771	AZR	M		☞2	11/00 ▸ 04/01	078121113F	**820027**	87	Y
2.8 i V6 Bi Turbo 30V *8D50*	E	2771	AZR	A		☞2	04/01 ▸ 09/01	078121113F	**820027**	87	Y
RS6 (2002>2004)										
4.2 i V8 40V *4B40, 4B60*	E	4172	BCY	A			07/02 ▸ 09/04	077121113B	**820415**	87	Y
RS6 Quattro										
4.2 i V8 40V *4B40, 4B60*	E	4172	BCY, BRV	A			07/02 ▸ 09/04	077121113C	**820557**	82	Y
S3 (98>2003)										
1.8 i Turbo 20V *8L1/B/S*	E	1781	APY, BAM, AMK	M			11/98 ▸	050121113C	**820171**	87	Y
1.8 i Turbo 20V *8L1B*	E	1781	AMK, APY	A			11/98 ▸ 04/02	050121113C	**820171**	87	Y
1.8 i Turbo 20V *8L1B*	E	1798	AUL	M			09/99 ▸ 04/01	050121113C	**820171**	87	Y
1.8 i Turbo 20V *8L1B*	E	1798	AUL	A			09/99 ▸ 04/01	050121113C	**820171**	87	Y
S4 (97>99)										
2.7 i V6 Bi Turbo 30V *8D50, 8D2/0/5*	E	2671	AGB, APB	M		☞2	10/97 ▸ 01/99	078121113F	**820027**	87	Y
2.7 i V6 Bi Turbo 30V *8D25*	E	2671	APB	A		☞2	08/98 ▸ 01/99	078121113F	**820027**	87	Y
S4 (99>2001)										
2.7 i V6 30V *8D20, 8D50*	E	2671	AGB	M		☞2	02/99 ▸ 09/01	078121113F	**820027**	87	Y
S6 (94>97)										
2.2 i Turbo 20V *4A28, 4A58*	E	2226	AAN	M		☞4	07/94 ▸	069121113	**820063**	87	Y
2.2 i Turbo 20V *4A28, 4A58*	E	2226	AAN	A		☞4	07/94 ▸	069121113	**820063**	87	Y
4.2 i V8 32V *4A28, 4A58*	E	4172	AEC	M		☞2	07/94 ▸	078121113F	**820027**	87	Y
4.2 i V8 32V *4A28, 4A58*	E	4172	AEC	A		☞2	07/94 ▸	078121113F	**820027**	87	Y
S6 (99>2001)										
4.2 i V8 40V *4B60, 4B40*	E	4172	ANK,AQJ	A			09/99 ▸ 05/01	077121113B	**820415**	87	Y
4.2 i V8 40V *4B40, 4B60*	E	4172	ANK,AQJ	M			09/99 ▸ 05/01	077121113B	**820415**	87	Y
S6 Plus Quattro (96>97)										
4.2 i V8 32V *4A28, 4A58*	E	4172	AHK	M		☞2	06/96 ▸ 10/97	078121113F	**820027**	87	Y
S8 (96>98)										
4.2 i V8 *4D2G*	E	4172	AKH, AHC	M		☞2	09/96 ▸ 12/98	078121113F	**820027**	87	Y
4.2 i V8 *4D2G*	E	4172	AHC, AKH	A		☞2	08/97 ▸ 12/98	078121113F	**820027**	87	Y
S8 (99>2002)										
4.2 i V8 *4D2G*	E	4172	AQH, AVP	M			05/99 ▸ 09/02	077121113C	**820557**	82	Y

• **New** Nouveau **Nuevo** Novo **Nuovo** Nieuw **Neu** Yeni Новый Nou

			Type Ctr.		CC			AC		2 3	OE	Valeo	(°)C
AUDI (.../...)													
S8 (99>2002) (.../...)													
4.2 i V8	*4D2G*	E	4172	AVP, AQH, BCS, AYS	A			05/99 ▸ 09/02	077121113C	**820557**	82	Y
TT (98>2006)													
1.8 i Turbo 20V	*8N30, 8N90*	E	1781	AUM, AUQ, AJQ, APP, ARY, BVR	M			10/98 ▸	050121113C	**820171**	87	Y
1.8 i Turbo 20V	*8N30, 8N90*	E	1781	BVR, ARY, AUQ	A			09/00 ▸	050121113C	**820171**	87	Y
3.2 i V6	*8N30, 8N90*	E	3189	BHE	M			04/03 ▸	022121113	**820958**	80	Y
3.2 i V6	*8N30, 8N90*	E	3189	BHE	A			07/03 ▸	022121113	**820958**	80	Y
TT (2006>)													
1.8 TFSi 16V	*8J30, 8J90*	E	1798	CDAA	M			06/08 ▸	03G121113	**820058**	88	Y
2.0 TFSi 16V	*8J30, 8J90*	E	1984	CCZA	A			06/08 ▸	03G121113	**820058**	88	Y
3.2 i V6 24V	*8J30, 8J90*	E	3189	BUB	M			08/06 ▸	022121113	**820958**	80	Y
3.2 i V6 24V	*8J30, 8J90*	E	3189	BUB	A			08/06 ▸	022121113	**820958**	80	Y
2.0 TDI 16V	*8J30, 8J90*	D	1968	CBBB/F	M			06/08 ▸	03G121113	**820058**	88	Y
V8													
3.6 i V8 32V	*441G, 4C2G*	E	3562	PT	M		☞2	01/90 ▸ 07/93	078121113F	**820027**	87	Y
3.6 i V8 32V	*441/G, 4C2G, 442/5/G*	E	3562	PT, PT-K	A		☞2	10/88 ▸ 07/93	078121113F	**820027**	87	Y
4.2 i V8 32V	*4C2G*	E	4172	ABH	M		☞2	10/91 ▸ 07/93	078121113F	**820027**	87	Y
4.2 i V8 32V	*4C2G*	E	4172	ABH	A		☞2	10/91 ▸ 07/93	078121113F	**820027**	87	Y
AUTOBIANCHI													
A112													
903	*A112B*	E	903	A112A200, A112A000	M			07/79 ▸ 10/86	4311105	**819886**	87	Y
965	*A112B*	E	965	A112B1000	M			10/72 ▸ 10/86	4311105	**819886**	87	Y
982	*A112A*	E	982	A112A1000	M			09/71 ▸ 1975	4311105	**819886**	87	Y
1050	*A112B*	E	1049	A112AB2C0	M			06/75 ▸ 1985	4311105	**819886**	87	Y
Y10													
1050,1050 Turbo	*156C1, 156D, 156C, 156D1*	E	1049	156A.000,156A1.000	M			07/85 ▸ 12/88	4409254	**819885**	82	Y
1.0,1.0 ie	*156AD, 156AA, 156AE*	E	999	156A2.100, 156A2.000 156A2.246	M		☞1,4	01/89 ▸ 09/92	7589135	**819938**	87	Y
1000	*156A, 156B1, 156B, 156E*	E	999	156A2.000,156A3.000	M			07/85 ▸ 12/88	4409254	**819885**	82	Y
1.1 ie	*156AC, 156AG, 156CG 156BG*	E	1108	156C.000, 176B2.000, 156C.046	M		☞1,4	01/89 ▸ 10/95	7589135	**819938**	87	Y
1.1 ie	*156AG, 156AC*	E	1108	156C.046, 176B2.000, 156C.000	A		☞1,4	11/89 ▸ 10/95	7589135	**819938**	87	Y
BEDFORD													
Brava													
2.3	*TFS16, TFR16*	E	2254	4ZDI	M		☞7,8	10/88 ▸ 06/90	94336069	**819966**	82	Y
2.2 D	*TFR52, TFS52*	D	2238	C233	M			10/88 ▸ 06/90	97089891	**820506**	82	Y
Midi													
2.0 TD	*98870, 98670*	D	1995	4FC1T	M			01/89 ▸ 10/94	97089891	**820506**	82	Y
2.2 D	*98570, 98770, 94570*	D	2189	4FD1	M			01/89 ▸ 10/94	97089891	**820506**	82	Y
2.0	*98370, 98170*	E	1994	4ZC1	M		☞7,8	01/89 ▸ 05/90	94336069	**819966**	82	Y
BMW													
1500 / 2002													
1600		E	1573	BMW04, 116	M			1964 ▸ 12/73	11531253249	**819904**	80	N
1500		E	1573	1600N	M			1974 ▸ 07/77	11531253249	**819904**	80	N
1600		E	1573	116	M			03/71 ▸ 05/75	11531253249	**819904**	80	N
1800		E	1766	118///1//3	M			09/63 ▸ 02/73	11531253249	**819904**	80	N
1800		E	1766	118/3	M			03/71 ▸ 05/75	11531253249	**819904**	80	N
1800		E	1773	118/2	M			07/64 ▸ 08/66	11531253249	**819904**	80	N
2000		E	1990	121///, E12///, 121/2	M			07/65 ▸ 12/71	11531253249	**819904**	80	N
2000,2000 Turbo		E	1990	121////2, BMW0///5, 121///, E12	M			03/71 ▸ 05/75	11531253249	**819904**	80	N

• **New** Nouveau **Nuevo** Novo **Nuovo** Nieuw **Neu** Yeni Новый Nou

Type Ctr.		cc		AC			OE	Valeo	(°)C	
BMW (.../...)										
1500 / 2002 (.../...)										
2000	E	1990	121	A			09/71 ▸ 05/75	11531253249	**819904**	80	N
2500 / 3300 (3.3)										
2.5,2500	E	2494	125	M			08/68 ▸ 02/77	11531254065	**819887**	80	Y
2500	E	2494	125	A			08/68 ▸ 02/77	11531254065	**819887**	80	Y
2.8,2800	E	2788	E3/128	M			04/69 ▸ 02/77	11531254065	**819887**	80	Y
2800	E	2788	E3/128	A			04/69 ▸ 02/77	11531254065	**819887**	80	Y
3.0	E	2985	E, E3-30	M			05/71 ▸ 02/77	11531254065	**819887**	80	Y
3.0	E	2985	E, E3-30	A			05/71 ▸ 02/77	11531254065	**819887**	80	Y
3.3	E	3295	M30B32	A			01/74 ▸ 02/77	11531254065	**819887**	80	Y
1 series E87										
116i *UF/21/22*	E	1596	N45B16	A			09/04 ▸ 12/06	11537510959	**820930**	105	Y
118i,120i *UF/31/32/51/52*	E	1995	N46B/20UL/20OL	M			09/04 ▸ 02/07	11537510959	**820930**	105	Y
118i,120i *UF/41/42/61/62*	E	1995	N46B/20OL/20UL	A			09/04 ▸ 02/07	11537510959	**820930**	105	Y
1 series E87 LCI										
2.0 d 16V *UD01, UH21, UH22, UD02 UD82, UD81*	D	1995	N47D/20O0/20TO/20U0	A			03/07 ▸	11517805192	**820853**	83	Y
2.0 d 16V *UD71, UD92, UD91, UH51 UD72, UH11, UH52, UH12*	D	1995	N47D/20U0/20O0/20A/20TO	M			03/07 ▸	11517805192	**820853**	83	Y
3 series E21										
315,316 *17/01/02, 27/11/12/51/52 91/92*	E	1573	1600, M10B16V	M			06/75 ▸ 12/83	11531253249	**819904**	80	N
316,318,318i *17/11/12/31/32, 28/11/51 91*	E	1766	M10B///18V, 118////4, M10B/18K/18	M			06/75 ▸ 12/83	11531253249	**819904**	80	N
316,318,318i *17/21/22/41/42, 28/21/61 93*	E	1766	M10B///18V, 118////4, M10B/18/18K	A			07/75 ▸ 07/83	11531253249	**819904**	80	N
320/4 *29/21/22, 31/61/62*	E	1990	E21	A			07/75 ▸ 07/79	11531253249	**819904**	80	N
323i *18/31/32*	E	2316	M60.EZ	M			08/79 ▸ 10/82	11231265085	**820520**	80	Y
3 series E30										
316i *AB/11/12, AC/11/12, AJ/11/12*	E	1596	M40B16ME.8	M			09/88 ▸ 09/93	11537511580	**819949**	88	Y
316i *AJ/11/12*	E	1596	M40B16ME.8	M		☞6	08/91 ▸ 09/93	11531712043	**820142**	92	Y
316i,316i Touring *AB/21/22, AC/21/22, AJ/21 22*	E	1596	M40B16ME.8	A			09/88 ▸ 09/93	11537511580	**819949**	88	Y
316i,316i Touring *AJ/21/22*	E	1596	M40B16ME.8	A		☞6	09/91 ▸ 09/93	11531712043	**820142**	92	Y
316,318i *10/11/12/52/72, 13/15/31 32/52/72, AC/51/71, AK/31 51/71*	E	1766	M10B/18K/18LE/18V/18L	M			09/82 ▸ 09/88	11531253249	**819904**	80	N
316,318i *10/11/21/22/32/42/62/81 82, 13/25/41/42/62/82, AC 61/81, AK/41/61*	E	1766	M10B/18L/18LE/18V/18K	A			09/82 ▸ 08/88	11531253249	**819904**	80	N
318i,318i Touring,318iS *AG71, AF/51/52/91, AJ/51 52/72, BA/51/52*	E	1796	M40B/18/18ME, M42B18	M			09/87 ▸ 09/93	11537511580	**819949**	88	Y
318i Touring *AG71, AJ72*	E	1796	M40B18	M		☞6	09/88 ▸ 09/93	11531712043	**820142**	92	Y
318i,318i Touring *AG81, AF/61/62, AJ/61/62 82, BA/61/62*	E	1796	M40B/18ME/18	A			09/87 ▸ 09/93	11537511580	**819949**	88	Y
318i Touring *AG81, AJ82*	E	1796	M40B18	A		☞6	09/88 ▸ 09/93	11531712043	**820142**	92	Y
320i,320i Touring *11/32/51/52, AA31, AD31 14/32/51/52, AH/51/52/71 BA/11/12/21/22/31/32*	E	1990	M20B/20/20M1.Z7	M			09/85 ▸ 09/93	11531713040	**819948**	80	Y
320i,320i Touring *11/42/61/62, AA41, AD41 14/42/62, AH/61/62/81 BA/41/42*	E	1990	M20B/20K/20/20M1.Z7	A			09/87 ▸ 09/93	11531713040	**819948**	80	Y
323i *1171, 1471*	E	2316	M20B23L	M			09/82 ▸ 09/85	11231265085	**820520**	80	Y
323i *11/71, 14/71/72*	E	2316	M20B23L	M			09/85 ▸ 09/86	11531713040	**819948**	80	Y
323i *1181, 1481*	E	2316	M20B23L	A			09/82 ▸ 09/85	11231265085	**820520**	80	Y
323i *11/81/82, 14/81/82*	E	2316	M20B23L	A			09/85 ▸ 09/86	11531713040	**819948**	80	Y
325i,325i Touring,325iX 325iX Touring *11/11/12, 12/31/32/71/91 14/11/12, 15/31/32/71/91 AG/51/52/95, BB/11/12/31 32*	E	2494	M20B/25M1.Z7/25M/G/25ME	M			09/85 ▸ 09/93	11531713040	**819948**	80	Y

• **New** Nouveau **Nuevo** Novo **Nuovo** Nieuw **Neu** Yeni Новый Nou

			CC		AC			OE	Valeo	(°)C	
BMW (.../...)											
3 series E30 (.../...)											
325i,325i Touring,325iX 325iX Touring	*11/21/22, 12/01/41/42/81 14/21/22, 15/01/41/42/81 AG/05/61/62, BB/21/22/41 42*	E	2494	M20B/25M1.Z7/25ME/25M/G	A			09/85 ▸ 09/93	11531713040	**819948**	80	Y
325e	*12/51/52, 15/51/52*	E	2692	M20B27M1.Z7	M			09/85 ▸ 08/87	11531713040	**819948**	80	Y
325e	*15/61/62*	E	2692	M20B27M1.Z7	A			09/85 ▸ 08/87	11531713040	**819948**	80	Y
325e	*12/61/62*	E	2693	M20B27ME	A			09/85 ▸ 08/87	11531713040	**819948**	80	Y
324d	*AE11*	D	2443	M21D24W	M			09/85 ▸ 12/91	11532241628	**819894**	92	Y
324d	*AE21*	D	2443	M21D24W	A			09/85 ▸ 12/91	11532241628	**819894**	92	Y
3 series E36											
316i	*CA/11/12*	E	1596	M40B16ME.8	M		☞6	12/90 ▸ 09/93	11531712043	**820142**	92	Y
316i	*CA/11/12*	E	1596	M40B16ME.8	M			12/90 ▸ 09/93	11537511083	**820143**	92	Y
316i	*BE/11/12, CA/71/72, CE/11/12, CG/10 11/12/16/18*	E	1596	M43B16	M		☞2	09/93 ▸	11531739755	**820183**	95	Y
316i	*CA/21/22*	E	1596	M40B16ME.8	A		☞6	04/91 ▸ 09/93	11531712043	**820142**	92	Y
316i	*CA/21/22*	E	1596	M40B16ME.8	A			04/91 ▸ 09/93	11537511083	**820143**	92	Y
316i	*BE/21/22, CA/81/82, CE/21/22, CG/20 21/22/26/28*	E	1596	M43B16	A		☞2	09/93 ▸	11531739755	**820183**	95	Y
318i,318iS	*CA/31/32/51/52*	E	1796	M42B18, M40B18	M			12/90 ▸ 1996	11537511083	**820143**	92	Y
318i,318iS,318ti	*BE/51/52, CA/31/32/51/52 CG/51/52*	E	1796	M42B18, M40B18	M		☞6	12/90 ▸	11531712043	**820142**	92	Y
318iS	*BE/51/52*	E	1796	M42B18	M			01/92 ▸ 02/00	11537511580	**819949**	88	Y
318i	*BH/31/32, CA/91/92, CE/31/32*	E	1796	M43B18	M		☞2	10/93 ▸	11531739755	**820183**	95	Y
318i,318iS	*CA/41/42/61/62*	E	1796	M40B18, M42B18	A			01/91 ▸ 1996	11537511083	**820143**	92	Y
318i,318iS,318ti	*BE/61/62, CA/41/42/61/62 CG/61/62*	E	1796	M42B18, M40B18	A		☞6	01/91 ▸	11531712043	**820142**	92	Y
318iS	*BE/61/62*	E	1796	M42B18	A			01/92 ▸ 02/00	11537511580	**819949**	88	Y
318i	*BH/41/42, CA/01/02, CE/41/42*	E	1796	M43B18	A		☞2	10/93 ▸	11531739755	**820183**	95	Y
318iS,318ti	*BE/71, CG/71/72*	E	1895	M44B19	M		☞2	12/95 ▸	11531743017	**820419**	95	Y
316i	*CS//10/11/12/15/16/17/18*	E	1895	M43B/19-E46/19-E46G	M		☞2	01/99 ▸ 04/01	11531437085	**820418**	105	Y
318iS,318ti	*BE/81, CG/81/82*	E	1895	M44B19	A		☞2	01/96 ▸	11531743017	**820419**	95	Y
316i	*CS/20/21/22/28*	E	1895	M43B19-E46	A		☞2	01/99 ▸ 04/01	11531437085	**820418**	105	Y
320i	*BF/51, BJ/31/32, CB/11/12/51/52, CE 51/52*	E	1991	M50B20, M52B20	M			12/90 ▸	11537511083	**820143**	92	Y
320i	*BF/11/12, CB/11/12*	E	1991	M50B20	M			12/90 ▸ 09/92	11531713040	**819948**	80	Y
320i	*BF/11/12/51, BJ/11/12/31/32, CB/11 12/51/52, CE/51/52*	E	1991	M50B20, M52B20	M		☞6	12/91 ▸	11531712043	**820142**	92	Y
320i	*BF/11/12/51, BJ/11/12/31/32, CB/11 12/51/52, CE/51/52*	E	1991	M50B20, M52B20	M			09/92 ▸ 02/00	11537511580	**819949**	88	Y
320i	*BF/21/22, CB/21/22*	E	1991	M50B20	A			12/90 ▸ 09/92	11531713040	**819948**	80	Y
320i	*BF/61, BJ/41/42, CB/21/22/61/62, CE 61/62*	E	1991	M52B20, M50B20	A			12/90 ▸	11537511083	**820143**	92	Y
320i	*BF/21/22/61, BJ/21/22/41/42, CB/21 22/61/62, CE/61/62*	E	1991	M52B20, M50B20	A		☞6	01/92 ▸	11531712043	**820142**	92	Y
320i	*BF/21/22/61, BJ/21/22/41/42, CB/21 22/61/62, CE/61/62*	E	1991	M50B20, M52B20	A			09/92 ▸ 02/00	11537511580	**819949**	88	Y
323i,323ti,325i	*BJ71, BF/71/72, CB/31/32 71/72, CG31, CT31, CE/71 72*	E	2494	M52B///25, M50B///25, M52B25-EU3	M			12/90 ▸	11537511083	**820143**	92	Y
325i	*BF/31/32, CB/31/32*	E	2494	M50B25	M			12/90 ▸ 09/92	11531713040	**819948**	80	Y
323i,325i	*BF/31/32/71/72, BJ/51/52 71, CB/31/32/71/72, CE/71 72*	E	2494	M50B25, M52B25	M			12/90 ▸ 02/00	11537511580	**819949**	88	Y
323i,323ti,325i	*BF/31/32/71/72, BJ/51/52 71, CB/31/32/71/72, CG31 CT31, CE/71/72*	E	2494	M52B/25-EU3/25, M50B25	M		☞6	12/90 ▸	11531712043	**820142**	92	Y
325i	*BF/41/42, CB/41/42*	E	2494	M50B25	A			12/90 ▸ 09/92	11531713040	**819948**	80	Y
323i,325i	*BF/41/42/81/82, BJ/61/62 81/82, CB/41/42/81/82, CE 81/82*	E	2494	M50B25, M52B25	A			12/90 ▸ 02/00	11537511580	**819949**	88	Y
323i,323ti,325i	*BF/41/42/81/82, BJ/61/62 81/82, CB/41/42/81/82 CG41, CT41, CE/81/82*	E	2494	M50B/25, M52B/25/25-EU3	A		☞6	12/90 ▸	11531712043	**820142**	92	Y

• **New** Nouveau **Nuevo** Novo **Nuovo** Nieuw **Neu** Yeni Новый Nou

		E	2494	M52B///25, M50B///25, M52B25-EU3	A			12/90 ▸	11537511083	**820143**	92	Y
328i	*BG/10/11/12, BK/71/72, CD/11/12, CF 11/12*	E	2793	M52B28	M		☞6	01/95 ▸	11531712043	**820142**	92	Y
328i	*BG/10/11/12, BK/71/72, CD/11/12, CF 11/12*	E	2793	M52B28	M			01/95 ▸	11537511083	**820143**	92	Y
328i	*BG/10/11/12, BK/71/72, CD/11/12, CF 11/12*	E	2793	M52B28	M			01/95 ▸ 02/00	11537511580	**819949**	88	Y
328i	*BG/21/22, BK/81/82, CD/21/22, CF/21 22*	E	2793	M52B28	A		☞6	01/95 ▸	11531712043	**820142**	92	Y
328i	*BG/21/22, BK/81/82, CD/21/22, CF/21 22*	E	2793	M52B28	A			01/95 ▸ 02/00	11537511580	**819949**	88	Y
328i	*BG/21/22, BK/81/82, CD/21/22, CF/21 22*	E	2793	M52B28	A			01/95 ▸	11537511083	**820143**	92	Y
318tds	*CC/51/52, CF/51/52, CJ/50 51/52*	D	1665	M41D	M			09/94 ▸ 04/01	11532246825	**820064**	80	Y
325td,325tds	*CC/11/12/31/32, CF/91/92*	D	2497	M51D25, M51A	M			08/91 ▸ 09/99	11532246199	**820064**	80	Y
325td,325tds	*CC/21/22/41/42, CF/01/02*	D	2497	M51A, M51D25	A			08/91 ▸ 09/99	11532246199	**820064**	80	Y
3 series E46												
316i,316ti	*AT/50/51/52, AX/30/31/32 AY/30/31/32*	E	1796	N42B/18VVT/18	M			05/01 ▸	11537510959	**820930**	105	Y
316i,316ti	*AT/60/61/62, AX/40/41/42 AY/40/41/42*	E	1796	N42B/18VVT/18	A			05/01 ▸	11537510959	**820930**	105	Y
316i,318Ci,318i	*AL/10/11/12/30/31/32, AP 30/31/32, BL/30/31/32, ER 10/11/12*	E	1895	M43B19-E46	M		☞2	03/98 ▸	11531437085	**820418**	105	Y
316i,318Ci,318i	*AL/20/21/22/40/41/42, AP 40/41/42, BL/40/41/42, ER 20/21/22*	E	1895	M43B19-E46	A		☞2	03/98 ▸	11531437085	**820418**	105	Y
320Ci,320i	*AM28, AR20, AR28, AM20 AR21, BM21*	E	1991	M52B20	A			03/98 ▸ 09/01	11531437040	**820422**	97	Y
320Ci,320i	*AM18, AV11, AR18, AM10 AR10, BM11, AR11*	E	1991	M52B20,M54B20	M			03/98 ▸ 09/01	11531437040	**820422**	97	Y
318Ci	*BV/70/71/72*	E	1995	M43B20	M		☞2	09/01 ▸	11531437085	**820418**	105	Y
318Ci	*BV/80/81/82*	E	1995	M43B20	A		☞2	09/01 ▸	11531437085	**820418**	105	Y
318Ci,318i,318ti	*AU/50/51/52, AX/50/51/52 AY/70/71/72, BP71, BD/91 92, BW/71/72*	E	1995	N42B/20VVT/20	M			09/01 ▸	11537510959	**820930**	105	Y
318Ci,318i,318ti	*AU/60/61/62, AX/60/61/62 BD10, BP81, AY/80/81/82 BW/81/82*	E	1995	N42B/20VVT/20	A			09/01 ▸	11537510959	**820930**	105	Y
320Ci,320i	*BS21, EN28, BD21, EV20 EN21, EN20, EV21, EN22 BN21, BN22, ZV28, EV22 BW21, BD22, BW22*	E	2171	M54B22	A			07/00 ▸ 07/06	11531437040	**820422**	97	Y
320Ci,320i	*BD12, BN12, ZV18, EN18 EN12, EN11, BW12, BN11 BW11, EV11, BS11, EV10 BD11, EV12, EN10*	E	2171	M54B22	M			07/00 ▸ 07/06	11531437040	**820422**	97	Y
323Ci,323i,325Ci,325i 325ti,325xi	*EP41, EP48, BS41, ZV40 EV42, EN41, AM42, EU41 EU48, AM48, AM40, EN42 EN48, AT41, BM42, BW41 EV41, AT42, BW42, BD42 BM41, EU40, BN41, EV40 BN42, EP40, EN40, BR41 BD41*	E	2494	M52B25,M54B/25/25-6S5	A			03/98 ▸ 05/06	11531437040	**820422**	97	Y

• **New** Nouveau **Nuevo** Novo **Nuovo** Nieuw **Neu** Yeni Новый Nou

		Type Ctr.		CC		AC				OE	Valeo	(°)C	
BMW (.../...)													
3 series E46 (.../...)													
323Ci,323i,325Ci,325i 325ti,325xi	*EV30, EV32, BM31, EU31 EV31, ZV30, EN31, BN32 AT31, BD31, EU30, EP30 AT32, EN32, EP31, BW32 EN30, BW31, BS31, BM32 EP38, AM38, BN31, BD32 AM32, BR31, EN38, AM30 EU38*	E	2494	M52B/25,M54B/25,M54B25-6S5	M			03/98 ▸ 05/06	11531437040	**820422**	97	Y
328Ci,328i	*BM62, AM62, AR62, AR68 AM68, AR60, BM61, AM60*	E	2793	M52B28	A			03/98 ▸ 12/00	11531437040	**820422**	97	Y
328Ci,328i	*AM58, AR50, AR52, BM51 BM52, AR58, AM50, AM52*	E	2793	M52B28	M			03/98 ▸ 12/00	11531437040	**820422**	97	Y
330Ci,330i,330xi	*AV60, BD62, EN60, BW62 EV61, BN61, EV68, BW61 EN61, EP61, AV68, BD61 EW61, EW60, EP60, AW60 EV60, EV62, EN68, BN62 EN62, EW68, BS61, EP68*	E	2979	M54B30	A			04/00 ▸ 08/06	11531437040	**820422**	97	Y
330Ci,330i,330xi	*EV58, AV58, BN51, BS51 EP51, EV52, EV51, EP50 AW50, BW51, BN52, AW58 BW52, EN51, AV50, EP58 EV50, EW51, EN52, EW50 BD51, BD52, EN58, EN50 EW58*	E	2979	M54B30	M			04/00 ▸ 08/06	11531437040	**820422**	97	Y
318d,320d	*AL/70/71/72/78, AX/70/71 72/78, EL/50/51, EU/50/51 71/72*	D	1951	M47D/20/20UL	M		☞2	03/98 ▸	11532247019	**820421**	85	Y
318d	*EU/81/82*	D	1951	M47D20UL	A		☞2	09/01 ▸ 02/05	11532247019	**820421**	85	Y
318d,320Cd,320d	*AP/70/71/72/78, AS/70/71 72/78, AT/70/71/72/91/92 EL/71/72*	D	1995	M47D/20TU/20TUUL	M		☞2	09/01 ▸	11532247019	**820421**	85	Y
3 series E90													
316i		E	1796	N42B18VVT	M			02/06 ▸	11537510959	**820930**	105	Y
318i,320i	*VA/51/52/71/72, VR/51/52 71/72*	E	1995	N46B/20OL/20UL	M			03/05 ▸	11537510959	**820930**	105	Y
318i,320i	*VA/61/62/81/82, VR/61/62 81/82*	E	1995	N46B/20OL/20UL	A			03/05 ▸	11537510959	**820930**	105	Y
320si	*VF/71/72*	E	1997	N45B20A	M			02/06 ▸	11537510959	**820930**	105	Y
325i,325xi,330i,330xi	*VV42, VV41, VV61, VV01 VV82, VV81*	E	2996	N53B/30U0/30O0	A			09/07 ▸ 08/08	11517805192	**820853**	83	Y
325i,325xi,330i,330xi	*VV71, VV51, VV72, VV91 VV32, VV31*	E	2996	N53B/30O0/30U0	M			09/07 ▸ 08/08	11517805192	**820853**	83	Y
320d,320d xDrive	*VG01, WM41, WC22, VU61 WC21, WM42, VU41, VU62 WD21, VG02, WD22*	D	1995	M47D20TU,N47D20O0	A			03/05 ▸	11517805192	**820853**	83	Y
318d,320d,320d xDrive	*VU31, VG12, VG11, WC11 WD12, VU51, VU52, VW11 VG91, WC12, WM31, WM32 WD11, VW12, VG92*	D	1995	M47D/20TU,N47D/20U0/2000	M			03/05 ▸	11517805192	**820853**	83	Y
330d,330d xDrive	*WA01, WM01, WB01, WM02 WA02*	D	2993	N57D30A	A			09/08 ▸	11517805192	**820853**	83	Y
330d,330d xDrive	*WM91, WA92, WB92, WA91 WM92*	D	2993	N57D30A	M			09/08 ▸	11517805192	**820853**	83	Y
3 series LCI E90/E91													
2.0 d 163 16V,2.0 d 16V	*DY41, UX21, PN42, PN21 PP81, UX22, UX42, UW81 PP21, UY41, PN22, PN41 DY42, UX41, PP22, UY22 KH41, UY21, KK41, KK42*	D	1995	N47D/20C/20U0/20O0	A			09/08 ▸	11517805192	**820853**	83	Y

• **New** Nouveau **Nuevo** Novo **Nuovo** Nieuw **Neu** Yeni Новый Nou

Type Ctr.		CC		AC			OE	Valeo	(°)C	
BMW (.../...)										
3 series LCI E90/E91 (.../...)										
2.0 d 163 16V,2.0 d 16V	*PN11, UY52, PP51, UY31 PP52, UY72, PP11, DY31 UY11, PN12, UX11, UW71 UX12, PN32, PR51, KH31 UY71, KK31, PP71, PN31 PP12, UY51, PR52, UX32 KK32, PR31, PR32, DY32 UX31, UY12*	D	1995	N47D/20U0/20C/2000	M		09/08 ▸	11517805192	**820853**	83	Y
3.0 d 24V	*UW01, KH61, PR02, PR01 KK82, PP01, KK61, DY61 UX01, UY01, KK81, DY81 UY02, UX02, DY62, DY82 KK62*	D	2993	N57D30A	A		09/08 ▸	11517805192	**820853**	83	Y
3.0 d 24V	*PR91, KK71, DY71, PR92 KK51, PP91, UY92, KK52 UY91, DY51, KH51, UW91 KK72, UX92, DY72, UX91 DY52*	D	2993	N57D30A	M		09/08 ▸	11517805192	**820853**	83	Y
5 series E12										
518,518i	*36/11/12/51/52, 46/11/12 31*	E	1766	M10B///18V, 118////4, M10B18K	M		06/74 ▸ 06/81	11531253249	**819904**	80	N
518	*36/21/61/62*	E	1766	118/4	A		09/74 ▸ 07/79	11531253249	**819904**	80	N
520/4,520i	*37/11/12/31/32/51/52/71 72*	E	1990	M15E12, M17	M		06/72 ▸ 01/79	11531253249	**819904**	80	N
520/4	*37/21/22/61/62*	E	1990	M17	A		06/72 ▸ 01/79	11531253249	**819904**	80	N
525	*38/21/22/61/62*	E	2494	M125	A		10/73 ▸ 06/81	11531254065	**819887**	80	Y
525	*38/11/12/51/52*	E	2494	M125	M		10/73 ▸ 06/81	11531254065	**819887**	80	Y
528,528i	*39/11/12/51/52/71/72*	E	2788	E3, M30B28L	M		01/75 ▸ 05/81	11531254065	**819887**	80	Y
528,528i	*39/21/22/61/62/81/82*	E	2788	E3, M30B28L	A		01/75 ▸ 05/81	11531254065	**819887**	80	Y
5 series E28										
518,518i	*40/11/12/35/91/92*	E	1766	M10B/18LE/18V	M		04/81 ▸ 08/88	11531253249	**819904**	80	N
518i	*4093*	E	1766	M10B18LE	A		09/84 ▸ 08/88	11531253249	**819904**	80	N
520i	*4872, 40/31/51/52/71*	E	1990	M20B/20K/20M1.Z7	M		04/81 ▸ 08/88	11531713040	**819948**	80	Y
520i	*40/61/62/81*	E	1990	M20B20K	A		09/81 ▸ 08/88	11531713040	**819948**	80	Y
525i	*4132, DA31*	E	2494	M30B25L	M		05/81 ▸ 09/85	11531254065	**819887**	80	Y
525i	*DA31, 41/31/32*	E	2494	M30B/25L/25	M		09/85 ▸ 08/88	11531713040	**819948**	80	Y
525i	*4142, DA41*	E	2494	M30B25L	A		05/81 ▸ 09/85	11531254065	**819887**	80	Y
525i	*4142, DA41*	E	2494	M30B25L	A		09/85 ▸ 08/88	11531713040	**819948**	80	Y
525e	*DB51, 42/31/32/52*	E	2693	M20B27ME	M		03/83 ▸ 08/88	11531713040	**819948**	80	Y
525e	*DB61, 42/26/41/42*	E	2693	M20B27ME	A		03/83 ▸ 08/88	11531713040	**819948**	80	Y
528i	*41/71/72*	E	2788	M30B28LE	M		05/81 ▸ 09/85	11531254065	**819887**	80	Y
528i	*41/71/72*	E	2788	M30B28LE	M		09/85 ▸ 08/88	11531713040	**819948**	80	Y
528i	*41/81/82*	E	2788	M30B28LE	A		06/81 ▸ 09/85	11531254065	**819887**	80	Y
528i	*41/81/82*	E	2788	M30B28LE	A		09/85 ▸ 08/88	11531713040	**819948**	80	Y
535i	*DC/11/31/32*	E	3430	M30B/34M/34ME	M		01/85 ▸ 09/85	11531254065	**819887**	80	Y
M535i	*DC/51/52/71/72*	E	3430	M30B/34M/35M.E7	M		02/85 ▸ 09/85	11531254065	**819887**	80	Y
M535i	*DC/51/52/71/72*	E	3430	M30B/34M/35M.E7	M		02/85 ▸ 08/88	11531713040	**819948**	80	Y
535i	*DC/11/12/31/32*	E	3430	M30B/34M/34ME	M		09/85 ▸ 08/88	11531713040	**819948**	80	Y
M535i	*DC/61/81/82*	E	3430	M30B/34M/35M.E7	A		12/84 ▸ 08/88	11531713040	**819948**	80	Y
M535i	*DC/61/81/82*	E	3430	M30B/34M/35M.E7	A		12/84 ▸ 09/85	11531254065	**819887**	80	Y
535i	*DC/21/41/42*	E	3430	M30B/34ME/34M	A		01/85 ▸ 09/85	11531254065	**819887**	80	Y
535i	*DC/21/22/41/42*	E	3430	M30B/34M/34ME	A		09/85 ▸ 08/88	11531713040	**819948**	80	Y
M5	*DC/91/92*	E	3453	M88/3	M		10/84 ▸ 08/88	11531307737	**819887**	80	Y
524td	*4211*	D	2443	M21D24WA	M		11/82 ▸ 08/88	11231265085	**820520**	80	Y
524d	*4291*	D	2443	M21D24W	M		05/86 ▸ 08/88	11232241628	**819894**	92	Y
524td	*4221*	D	2443	M21D24WA	A		05/83 ▸ 08/87	11231265085	**820520**	80	Y
5 series E34										
518i	*HG31, HA/11/12*	E	1796	M40B18	M		09/89 ▸ 04/94	11537511580	**819949**	88	Y
518i	*HA/31/32, HG/11/12*	E	1796	M43B18	M	☞2	05/94 ▸ 09/96	11531739755	**820183**	95	Y
518i	*HA/21/22*	E	1796	M40B18	A		10/93 ▸ 04/94	11537511580	**819949**	88	Y
518i	*HA/41/42*	E	1796	M43B18	A	☞2	08/94 ▸ 09/95	11531739755	**820183**	95	Y

• **New** Nouveau **Nuevo** Novo **Nuovo** Nieuw **Neu** Yeni Новый Nou

Valeo

BMW (.../...)

5 series E34 (.../...)

520i	*HB/11/12/31/32*	E	1990	M20B/20M1.Z7/20M0.E8	M			01/88 ▸ 07/90	11531713040	**819948**	80	Y
520i	*HB/21/22/41/42*	E	1990	M20B/20M0.E8/20M1.Z7	A			01/88 ▸ 07/90	11531713040	**819948**	80	Y
520i	*HB/51/52, HG/51/52*	E	1991	M50B20	M			03/90 ▸ 09/92	11531713040	**819948**	80	Y
520i	*HB/51/52, HG/51/52*	E	1991	M50B20	M			03/90 ▸ 09/96	11537511580	**819949**	88	Y
520i	*HB/51/52*	E	1991	M50B20	M			03/90 ▸ 09/95	11537511083	**820143**	92	Y
520i	*HB/61/62*	E	1991	M50B20	A			03/90 ▸ 09/95	11537511083	**820143**	92	Y
520i	*HB/61/62, HG/61/62*	E	1991	M50B20	A			03/90 ▸ 09/92	11531713040	**819948**	80	Y
520i	*HB/61/62, HG/61/62*	E	1991	M50B20	A			03/90 ▸ 09/96	11537511580	**819949**	88	Y
525i	*HC/11/12/13, HJ/51/52*	E	2494	M50B25, M20B25	M			02/88 ▸ 09/92	11531713040	**819948**	80	Y
525i,525iX	*HD/51/52/71/72, HJ/51/52 71/72*	E	2494	M50B25	M			03/90 ▸ 09/96	11537511580	**819949**	88	Y
525i,525iX	*HD/51/52/71/72*	E	2494	M50B25	M			03/90 ▸ 09/95	11537511083	**820143**	92	Y
525i	*HC/21/22/23, HJ/61/62*	E	2494	M50B25, M20B25	A			02/88 ▸ 09/92	11531713040	**819948**	80	Y
525i,525iX	*HD/61/62/81/82*	E	2494	M50B25	A			03/90 ▸ 09/95	11537511083	**820143**	92	Y
525i,525iX	*HD/61/62/81/82, HJ/61/62 81/82*	E	2494	M50B25	A			03/90 ▸ 09/96	11537511580	**819949**	88	Y
530i	*HC/51/52*	E	2986	M30B30M.E7	M			01/88 ▸ 04/90	11531713040	**819948**	80	Y
530i	*HC/61/62*	E	2986	M30B30M.E7	A			01/88 ▸ 06/90	11531713040	**819948**	80	Y
530i	*HE11, HK12*	E	2997	M60B30	M		☞2	09/92 ▸ 09/96	11531729720	**820423**	85	N
530i	*HE11, HK12*	E	2997	M60B30	M		☞2	09/92 ▸ 09/96	11531702279	**820424**	95	N
530i	*HE22, HK21*	E	2997	M60B30	A		☞2	10/92 ▸ 09/96	11531729720	**820423**	85	N
530i	*HE22, HK21*	E	2997	M60B30	A		☞2	10/92 ▸ 09/96	11531702279	**820424**	95	N
535i	*HD/11/12/13*	E	3430	M30B/35M7/34M	M			11/87 ▸ 04/93	11531713040	**819948**	80	Y
535i	*HD/21/22/23*	E	3430	M30B/35M7/34M	A			11/87 ▸ 04/93	11531713040	**819948**	80	Y
540i	*HK32, HE/51/52*	E	3982	M60B40	M		☞2	07/93 ▸ 09/96	11531702279	**820424**	95	N
540i	*HK32, HE/51/52*	E	3982	M60B40	M		☞2	07/93 ▸ 09/96	11531729720	**820423**	85	N
540i	*HE/61/62, HK/41/42*	E	3982	M60B40	A		☞2	09/92 ▸ 09/96	11531729720	**820423**	85	N
540i	*HE/61/62, HK/41/42*	E	3982	M60B40	A		☞2	09/92 ▸ 09/96	11531702279	**820424**	95	N
525td,525tds	*HA/71/72/91/92, HG/71/72 91*	D	2497	M51A, M51D25	M			08/91 ▸ 09/96	11532246199	**820064**	80	Y
525td,525tds	*HA/01/02/81/82, HG/01/81 82*	D	2497	M51D25, M51A	A			08/91 ▸ 09/96	11532246199	**820064**	80	Y

5 series E39

520i	*DD/11/12, DH/11/12*	E	1991	M52B20	M			07/96 ▸ 09/98	11537511083	**820143**	92	Y
520i	*DD/11/12, DM/10/11*	E	1991	M52B/20/20-EU3	M			09/98 ▸	11531713040	**819948**	80	Y
520i	*DD/21/22, DH/21/22*	E	1991	M52B20	A			07/96 ▸ 09/98	11537511083	**820143**	92	Y
520i	*DD/21/22, DM/20/21*	E	1991	M52B/20/20-EU3	A			09/98 ▸	11531713040	**819948**	80	Y
520i	*DH21, DD21, DR21, DM21, DM20, DH22 DR20, DD22*	E	1991	M52B20	A			09/98 ▸ 04/04	11531437040	**820422**	97	Y
520i	*DD12, DD11, DH11, DH12, DM11, DR10 DR11, DM10*	E	1991	M52B20	M			09/98 ▸ 04/04	11531437040	**820422**	97	Y
520i	*DT/11/21*	E	2171	M54B22	M			07/00 ▸	11531713040	**819948**	80	Y
520i	*DT/10/20*	E	2171	M54B22	A			07/00 ▸	11531713040	**819948**	80	Y
520i	*DT10, DS20, DT20, DS21*	E	2171	M54B22	A			07/00 ▸ 04/04	11531437040	**820422**	97	Y
520i	*DS11, DT21, DS10, DT11*	E	2171	M54B22	M			07/00 ▸ 04/04	11531437040	**820422**	97	Y
523i	*DD/31/32, DH/31/32, DM/30/31, DR/30 31*	E	2494	M52B/25-EU3/25	M			09/95 ▸	11537511083	**820143**	92	Y
523i	*DD/41/42, DH/41/42, DM/40/41, DR/40 41*	E	2494	M52B/25-EU3/25	A			10/95 ▸	11537511083	**820143**	92	Y
523i,525i	*DT40, DR40, DS48, DM41 DD41, DM40, DH41, DS40 ZT48, DR41, DD42, DH42*	E	2494	M52B25,M54B25	A			09/98 ▸ 04/04	11531437040	**820422**	97	Y
523i,525i	*DM31, DM30, DR31, DS30 DT30, DH31, DS38, DD31 DR30, ZT38, DD32, DH32*	E	2494	M52B25,M54B25	M			09/98 ▸ 04/04	11531437040	**820422**	97	Y
528i	*DD/51/52, DH/51/52*	E	2793	M52B28	M			09/95 ▸ 09/98	11537511083	**820143**	92	Y
528i	*DD/60/61/62, DH/61/62*	E	2793	M52B28	A			09/95 ▸ 09/98	11537511083	**820143**	92	Y
528i	*DP60, DM61, DD60, DH62, DD62, DH61 DP68, DM68, DD61*	E	2793	M52B28	A			09/98 ▸ 04/04	11531437040	**820422**	97	Y
528i	*DM51, DD51, DM58, DP58, DH51, DP50 DD52, DH52*	E	2793	M52B28	M			09/98 ▸ 04/04	11531437040	**820422**	97	Y
530i	*DT60, DS68, ZT68, DS60*	E	2979	M54B30	A			07/00 ▸ 04/04	11531437040	**820422**	97	Y
530i	*DS58, ZT58, DT50, DS50*	E	2979	M54B30	M			07/00 ▸ 04/04	11531437040	**820422**	97	Y

• **New** Nouveau **Nuevo** Novo **Nuovo** Nieuw **Neu** Yeni Новый Nou

Type Ctr.		cc		AC		2 3	OE	Valeo	(°)C	
BMW (.../...)										
5 series E39 (.../...)										
535i *DE12*	E	3498	M62B35	M		☞2	07/96 ▸ 09/98	11531437526	**820425**	105	Y
535i *DE12, DN11*	E	3498	M62B/35-245/35	M		☞2	09/98 ▸	11531436386	**820427**	105	Y
535i *DE/21/22*	E	3498	M62B35	A		☞2	07/96 ▸ 09/98	11531437526	**820425**	105	Y
535i *DN21, DE/21/22*	E	3498	M62B/35/35-245	A		☞2	09/98 ▸	11531436386	**820427**	105	Y
540i *DE52, DJ52*	E	4398	M62B44	M		☞2	07/96 ▸ 09/98	11531437526	**820425**	105	Y
540i *DJ52, DN51, DR51, DE/52*	E	4398	M62B/44/44-285	M		☞2	09/98 ▸	11531436386	**820427**	105	Y
540i *DJ/61/62*	E	4398	M62B44	A		☞2	01/97 ▸ 09/98	11531437526	**820425**	105	Y
540i *DN61, DR61, DJ/61/62*	E	4398	M62B/44/44-285	A		☞2	09/98 ▸	11531436386	**820427**	105	Y
520d *DM/71, DR/70/71*	D	1951	M47D20	M		☞2	01/00 ▸	11532247019	**820421**	85	Y
525Td,525tds *DF/50/51/70/71/72/78, DG 70/71/78, DJ/71/72*	D	2497	M51D25	M			10/95 ▸	11532246199	**820064**	80	Y
525tds *DF/80/81/82/88, DG/80/81 88, DJ/81/82*	D	2497	M51D25	A			10/95 ▸	11532246199	**820064**	80	Y
5 series E60										
520i *NA41, NA42*	E	2171	M54B22	A			05/03 ▸ 03/05	11531437040	**820422**	97	Y
520i *NA31, NA32*	E	2171	M54B22	M			05/03 ▸ 03/05	11531437040	**820422**	97	Y
525i *NG61, NA61, NG62, NA62*	E	2494	M54B25-6S5	A			09/03 ▸ 02/05	11531437040	**820422**	97	Y
525i *NG52, NA51, NG51, NA52*	E	2494	M54B25-6S5	M			09/03 ▸ 02/05	11531437040	**820422**	97	Y
530i *NA81, NA82*	E	2979	M54B30	A			05/03 ▸ 02/05	11531437040	**820422**	97	Y
530i *NA72, NA71*	E	2979	M54B30	M			05/03 ▸ 02/05	11531437040	**820422**	97	Y
5 series E60/61 LCI										
2.0 d 16V *NX42, NX41, PX41, PX42*	D	1995	N47D20O0	A			09/07 ▸ 09/10	11517805192	**820853**	83	Y
2.0 d 16V *PX32, NX32, PX31, NX31*	D	1995	N47D20O0	M			09/07 ▸ 09/10	11517805192	**820853**	83	Y
5 series (F10/F11/F18)										
2.0 d 16V *MX21, FW21, MX22, FW22*	D	1995	N47D20C	A			01/10 ▸	11517805192	**820853**	83	Y
2.0 d 16V *FW11, MX11, FW12, MX12 FW92*	D	1995	N47D20C	M			01/10 ▸	11517805192	**820853**	83	Y
3.0 d 24V,3.0 d 258 24V *MX62, FV31, MX71, FW42 MX61, FW71, MX42, FW61 MX72, FW41, MW91, FW72 FW62, MX41*	D	2993	N57D/30A/30B	A			01/09 ▸	11517805192	**820853**	83	Y
3.0 d 24V *MX32, MX52, MX51, FW51 FW32, FW31, FW52, MX31*	D	2993	N57D30A	M			01/09 ▸	11517805192	**820853**	83	Y
6 series E24										
628 *EA71, 51/31/32/72*	E	2788	M30B28LE	M			09/79 ▸ 09/85	11531254065	**819887**	80	Y
628 *EA71, 51/31/32/72*	E	2788	M30B28LE	M			09/85 ▸ 08/88	11531713040	**819948**	80	Y
628 *EA81, 51/41/42/82*	E	2788	M30B28LE	A			09/79 ▸ 09/85	11531254065	**819887**	80	Y
628 *EA81, 51/41/42/82*	E	2788	M30B28LE	A			09/85 ▸ 08/88	11531713040	**819948**	80	Y
630 *5111, 5221*	E	2986	M30B30M	M			02/76 ▸ 08/79	11531254065	**819887**	80	Y
630 *51/21/22*	E	2986	M30B30M	A			02/76 ▸ 08/79	11531254065	**819887**	80	Y
633 *52/31/32*	E	3210	M30B32L	M			01/76 ▸ 12/81	11531254065	**819887**	80	Y
633 *52/41/42*	E	3210	M30B32L	A			07/76 ▸ 12/81	11531254065	**819887**	80	Y
635,M635 *EC71, 53/51/52/72*	E	3430	M30B/35M.E7//34M/35M.E7	M			05/82 ▸ 04/89	11531307737	**819887**	80	Y
635 *EC71, 53/51/52/72*	E	3430	M30B/35M.E7/34M	M			09/85 ▸ 04/89	11531713040	**819948**	80	Y
635,M635 *EC81, 53/61/62/82*	E	3430	M30B/35M.E7//34M/35M.E7	A			05/82 ▸ 04/89	11531307737	**819887**	80	Y
635 *EC81, 53/61/82*	E	3430	M30B/34M/35M.E7	A			01/85 ▸ 04/89	11531713040	**819948**	80	Y
635,M635 *53/32, EE31, 55/31/32*	E	3453	M88/3, M30B35L	M			06/78 ▸ 04/89	11531307737	**819887**	80	Y
635 *53/41/42*	E	3453	M30B35L	A			09/79 ▸ 08/82	11531254065	**819887**	80	Y
7 series E23										
728iS *FD71, 64/31/71*	E	2494	M30B25L	M			09/81 ▸ 09/85	11531254065	**819887**	80	Y
728iS *FD71, 64/31/71*	E	2494	M30B25L	M			09/85 ▸ 04/86	11531713040	**819948**	80	Y
728iS *64/41/81*	E	2494	M30B25L	A			11/81 ▸ 09/85	11531254065	**819887**	80	Y
728iS *64/41/81*	E	2494	M30B25L	A			09/85 ▸ 04/86	11531713040	**819948**	80	Y
728,728i *65/11/12/31/32/71/72*	E	2788	M30B28LE, M128	M			05/77 ▸ 09/85	11531254065	**819887**	80	Y
728i *65/71/72*	E	2788	M30B28LE	M			09/85 ▸ 04/86	11531713040	**819948**	80	Y
728,728i *65/21/22/41/42/81/82*	E	2788	M30B28LE, M128	A			04/77 ▸ 09/85	11531254065	**819887**	80	Y
728i *65/81/82*	E	2788	M30B28LE	A			09/85 ▸ 05/86	11531713040	**819948**	80	Y
730 *66/11/12*	E	2986	M30B30	M			07/77 ▸ 08/79	11531254065	**819887**	80	Y
730 *66/21/22*	E	2986	M30B30	A			07/77 ▸ 08/79	11531254065	**819887**	80	Y

• **New** Nouveau **Nuevo** Novo **Nuovo** Nieuw **Neu** Yeni Новый Nou

			CC			AC				Valeo	(°)C	
BMW (.../...)												
7 series E23 (.../...)												
732i,733i	*66/31/32/34/71/72/74, 67 31/32*	E	3210	M30B/32L/32M	M			03/77 ▸ 09/85	11531254065	**819887**	80	Y
732i	*66/71/72*	E	3210	M30B32M	M			09/85 ▸ 04/86	11531713040	**819948**	80	Y
732i,733i,745i	*66/41/42/44/47/49/81/82 84/89, 67/41/42/45/46, 69 41/81*	E	3210	M30B/32L/32LA/32M	A			03/77 ▸ 09/85	11531254065	**819887**	80	Y
732i	*66/81/82*	E	3210	M30B32M	A			09/85 ▸ 05/86	11531713040	**819948**	80	Y
735i	*FH71, 68/51/72*	E	3430	M30B/35M.E7/34M	M			09/82 ▸ 09/85	11531254065	**819887**	80	Y
735i	*FH71, 68/51/72*	E	3430	M30B/35M.E7/34M	M			09/85 ▸ 05/86	11531713040	**819948**	80	Y
735i,745i	*67/21, 68/61/82, FG81 FH81, 69/61/91*	E	3430	M30B/35M.E7/34MA/34M	A			09/82 ▸ 09/85	11531254065	**819887**	80	Y
735i,745i	*67/21, 68/61/82, FG81 FH81, 69/61/91*	E	3430	M30B/34M/34MA/35M.E7	A			09/85 ▸ 05/86	11531713040	**819948**	80	Y
735i	*68/31/32*	E	3453	M30B35L	M			09/79 ▸ 09/82	11531254065	**819887**	80	Y
735i	*68/41/42*	E	3453	M30B35L	A			09/79 ▸ 09/82	11531254065	**819887**	80	Y
7 series E32												
730i	*GA/31/32/71/72, GC/21/22*	E	2986	M30B/30M.E7/30M	M			09/86 ▸ 03/94	11531713040	**819948**	80	Y
730i	*GA/41/42/81/82*	E	2986	M30B/30M/30M.E7	A			09/86 ▸ 03/94	11531713040	**819948**	80	Y
730i	*GD/11/51*	E	2997	M60B30	M		☞2	04/92 ▸ 05/94	11531729720	**820423**	85	N
730i	*GD/21/61*	E	2997	M60B30	A		☞2	04/92 ▸ 05/94	11531729720	**820423**	85	N
735i	*GB/31/32/33/51/52, GC/31/51/52*	E	3430	M30B/35M.E7/34M/35	M			09/86 ▸ 06/92	11531713040	**819948**	80	Y
735i	*GB/41/42/43/61/62, GC/41/42/43/61 62*	E	3430	M30B/35M.E7/34M/35	A			09/86 ▸ 07/92	11531713040	**819948**	80	Y
740i	*GD/41/42/81/82*	E	3982	M60B40	A		☞2	09/92 ▸ 05/94	11531729720	**820423**	85	N
750i	*GB/81/82, GC/81/82/83*	E	4988	M70B50	A		☞2	11/86 ▸ 05/94	11531729720	**820423**	85	N
7 series E38												
728i	*GE/11/30/31*	E	2793	M52B/28-EU3/28	M			07/95 ▸ 08/01	11537511083	**820143**	92	Y
728i	*GE31*	E	2793	M52B28-EU3	M		☞2	09/98 ▸ 08/01	11537509227	**820421**	85	Y
728i	*GH41, GE/21/22/40/41/42*	E	2793	M52B/28/28-EU3	A			07/95 ▸ 08/01	11537511083	**820143**	92	Y
728i	*GH41, GE/40/41/42*	E	2793	M52B28-EU3	A		☞2	09/98 ▸ 08/01	11537509227	**820421**	85	Y
730i	*GF11*	E	2997	M60B30	M		☞2	06/94 ▸	11531702279	**820424**	95	N
730i	*GF11*	E	2997	M60B30	M		☞2	06/94 ▸ 08/01	11531729720	**820423**	85	N
730i	*GF21, GJ21*	E	2997	M60B30	A		☞2	06/94 ▸	11531702279	**820424**	95	N
730i	*GF21, GJ21*	E	2997	M60B30	A		☞2	06/94 ▸ 08/01	11531729720	**820423**	85	N
735i	*GF31, GJ31*	E	3498	M62B35	M		☞2	04/96 ▸ 09/98	11531437526	**820425**	105	Y
735i	*GF31, GJ31*	E	3498	M62B35	M		☞2	09/98 ▸ 08/01	11531436386	**820427**	105	Y
735i	*GF41, GJ41*	E	3498	M62B35	A		☞2	04/96 ▸ 09/98	11531437526	**820425**	105	Y
735i	*GF41, GJ41*	E	3498	M62B35	A		☞2	09/98 ▸ 08/01	11531436386	**820427**	105	Y
740i	*GJ61*	E	3982	M60B40	A		☞2	06/94 ▸ 03/96	11531729720	**820423**	85	N
740i	*GJ61*	E	3982	M60B40	A		☞2	06/94 ▸ 03/96	11531702279	**820424**	95	N
740i	*GF71, GJ71*	E	4398	M62B44	M		☞2	04/96 ▸ 09/98	11531437526	**820425**	105	Y
740i	*GF71, GJ71*	E	4398	M62B44	M		☞2	09/98 ▸ 08/01	11531436386	**820427**	105	Y
740i	*GF81, GJ81*	E	4398	M62B44	A		☞2	04/96 ▸ 09/98	11531437526	**820425**	105	Y
740i	*GF81, GJ81*	E	4398	M62B44	A		☞2	09/98 ▸ 08/01	11531436386	**820427**	105	Y
725Tds	*GE91*	D	2497	M51D25	M			04/96 ▸ 08/01	11532246199	**820064**	80	Y
725Tds	*GE01*	D	2497	M51D25	A			04/96 ▸ 08/01	11532246199	**820064**	80	Y
7 series E65												
730i	*GL21, GL22*	E	2979	M54B30	A			09/03 ▸ 02/05	11531437040	**820422**	97	Y
7 series E66												
730Li	*GN22, GN21*	E	2979	M54B30	A			09/03 ▸ 02/05	11531437040	**820422**	97	Y
7 series (F01/F02/F03/F04)												
3.0 d 24V	*KM21, KM82, KM81, KM22*	D	2993	N57D/30A/30B	A			11/08 ▸	11517805192	**820853**	83	Y
8 series E31												
840	*EF51*	E	3982	M60B40	M		☞2	03/94 ▸ 07/96	11531729720	**820423**	85	N
840	*EF/61/62*	E	3982	M60B40	A		☞2	12/92 ▸ 07/96	11531729720	**820423**	85	N
840	*EF61*	E	3982	M60B40	A		☞2	12/92 ▸ 07/96	11531702279	**820424**	95	N
840	*EF61*	E	3982	M60B40	A			12/92 ▸ 07/96	11531731486	**820426**	70	Y
840	*EF/71/72*	E	4398	M62B44	M		☞2	03/96 ▸ 2000	11531729720	**820423**	85	N

• **New** Nouveau **Nuevo** Novo **Nuovo** Nieuw **Neu** Yeni Новый Nou

Type Ctr.		cc		AC			OE	Valeo	(°)C	
BMW (.../...)										
8 series E31 (.../...)										
840	*EF/81/82* E	4398	M62B44	A		☞2	03/96 ▸ 2000	11531729720	**820423**	85 N
850	*EG12* E	4988	M70B50	M		☞2	02/90 ▸ 08/94	11531729720	**820423**	85 N
850	*EG/21/22* E	4988	M70B50	A		☞2	09/89 ▸ 08/94	11531729720	**820423**	85 N
850	*EG21, EG22* E	4988	M70B50	A			09/89 ▸ 08/94	11531731486	**820426**	70 Y
850	*EG12, EG11* E	4988	M70B50	M			09/89 ▸ 08/94	11531731486	**820426**	70 Y
850	*EG41* E	5379	M73B54	A		☞2	09/94 ▸	11531729720	**820423**	85 N
850	*EG41* E	5379	M73B54	A			09/94 ▸	11531731486	**820426**	70 Y
850	*EG/91/92* E	5576	S70B56	M		☞2	09/92 ▸ 07/96	11531729720	**820423**	85 N
850	*EG92, EG91* E	5576	S70B56	M			09/92 ▸ 07/96	11531731486	**820426**	70 Y
M5 E12										
3.5 i	*47/01/02* E	3453	M30B35L	M			04/80 ▸ 05/81	11531254065	**819887**	80 Y
M5 E34										
3.6 i	*HD92, HD91* E	3535	S38B36M	M			07/88 ▸ 12/91	11531315063	**820546**	76 N
3.8 i	*HC92, HC91, HJ91* E	3795	S38B38	M			12/91 ▸ 09/95	11531315063	**820546**	76 N
M5 E39										
5.0 i	*DE91* E	4941	S62B50	M			07/99 ▸ 06/03	11531407772	**820546**	76 N
X1 (2009>)										
2.0 d 177 16V 2.0 d 204 16V	*VP52, VP51, VP41, VP42* D	1995	N47D/20D/20C	A			10/09 ▸	11517805192	**820853**	83 Y
2.0 d 143 16V 2.0 d 177 16V	*VP12, VP11, VN11, VP31* *VP32, VN31, VN12, VN32* D	1995	N47D/20A/20C	M			10/09 ▸	11517805192	**820853**	83 Y
X3 (2003>2006)										
2.0 i 16V	E	1995	N46B20OL	M			09/05 ▸	11537510959	**820930**	105 Y
2.5 i 24V	*PA71* E	2494	M54B25-6S5	A			03/04 ▸ 07/06	11531437040	**820422**	97 Y
2.5 i 24V	*PA71* E	2494	M54B25-6S5	M			03/04 ▸ 07/06	11531437040	**820422**	97 Y
3.0 i 24V	*PA91* E	2979	M54B30	A			10/03 ▸ 07/06	11531437040	**820422**	97 Y
3.0 i 24V	*PA91* E	2979	M54B30	M			10/03 ▸ 07/06	11531437040	**820422**	97 Y
X3 E83 LCI (2006>)										
2.0 i	*PC/31/32* E	1995	N46B20B	M			08/06 ▸	11537510959	**820930**	105 Y
1.8 d,2.0 d	*PE21, PE81, PE82, PE22* D	1995	N47D/20OO/20C	A			09/07 ▸	11517805192	**820853**	83 Y
1.8 d,2.0 d	*PE71, PE11, PE12, PE72* D	1995	N47D/20C/20OO	M			09/07 ▸	11517805192	**820853**	83 Y
X5 (2000>2006)										
3.0 i 24V	*FA11, FA18* E	2979	M54B30	A			01/00 ▸ 11/06	11531437040	**820422**	97 Y
3.0 i 24V	*FA51, FA* E	2979	M54B30	M			01/00 ▸ 11/06	11531437040	**820422**	97 Y
4.4 i	*FB/31/38* E	4398	M62B44	A		☞2	01/00 ▸	11531436386	**820427**	105 Y
4.6 is	*F* E	4619	M62B46	A		☞2	09/01 ▸	11531436386	**820427**	105 Y
X5 LCI (E70) (03>2010)										
3.0 d 24V	*ZW42, ZW62, ZW41, ZW61* D	2993	N57D/30A/30B	A			03/10 ▸	11517805192	**820853**	83 Y
X6 (E71/E72)										
3.0 d 24V	*FH61, FH01, FH62, FH02* D	2993	N57D/30A/30B	A			03/10 ▸	11517805192	**820853**	83 Y
Z1										
2.5 i	*BA91* E	2494	M20B25M1.Z7	M			03/89 ▸ 1992	11531713040	**819948**	80 Y
Z3										
1.8 i	*CJ11* E	1796	M43B18	M		☞2	01/96 ▸ 08/98	11531739755	**820183**	95 Y
1.8 i	*CJ21* E	1796	M43B18	A		☞2	01/96 ▸ 08/98	11531739755	**820183**	95 Y
1.9 i 16V	*CH71* E	1895	M44B19	M		☞2	01/96 ▸ 04/99	11531743017	**820419**	95 Y
1.9 i	*CM/11/12* E	1895	M43B19-EU3	M		☞2	09/98 ▸	11531437085	**820418**	105 Y
1.9 i 16V	*CH81* E	1895	M44B19	A		☞2	01/96 ▸ 04/99	11531743017	**820419**	95 Y
2.0 i	*CL41, CL42* E	1991	M52B20	A			04/99 ▸ 10/00	11531437040	**820422**	97 Y
2.0 i	*CL32, CL31* E	1991	M52B20	M			04/99 ▸ 10/00	11531437040	**820422**	97 Y
2.2 i	*CN21, CN22* E	2171	M54B22	A			08/00 ▸ 06/02	11531437040	**820422**	97 Y
2.2 i	*CN11, CN12* E	2171	M54B22	M			08/00 ▸ 06/02	11531437040	**820422**	97 Y
2.8 i 24V	*CK51, CJ/31/32* E	2793	M52B28	M			03/96 ▸ 09/98	11537511083	**820143**	92 Y

• **New** Nouveau **Nuevo** Novo **Nuovo** Nieuw **Neu** Yeni Новый Nou

Valeo

												(°)C	
BMW (.../...)													
Z3 (.../...)													
2.8 i 24V	*CK61, CJ/41/42*	E	2793	M52B28	A			03/96 ▸ 09/98	11537511083	**820143**	92	Y
2.8 i 24V	*CK61, CJ41, CJ42*	E	2793	M52B28	A			09/98 ▸ 05/00	11531437040	**820422**	97	Y
2.8 i 24V	*CJ32, CJ31, CK51*	E	2793	M52B28	M			09/98 ▸ 05/00	11531437040	**820422**	97	Y
3.0 i 24V	*CK81, CN61, CN62*	E	2979	M54B30	A			06/00 ▸ 06/02	11531437040	**820422**	97	Y
3.0 i 24V	*CK71, CN52, CN51*	E	2979	M54B30	M			06/00 ▸ 06/02	11531437040	**820422**	97	Y
Z4 (E85/E86) (2002>2009)													
2.0 i 16V	*BZ/11/12*	E	1995	N46B2001	M			03/05 ▸ 08/08	11537510959	**820930**	105	Y
2.2 i 24V	*BT22, BT21*	E	2171	M54B22	A			03/04 ▸ 01/06	11531437040	**820422**	97	Y
2.2 i 24V	*BT11, BT12*	E	2171	M54B22	M			03/04 ▸ 01/06	11531437040	**820422**	97	Y
2.5 i 24V	*BT42, BT41*	E	2494	M54B25-6S5	A			09/02 ▸ 01/06	11531437040	**820422**	97	Y
2.5 i 24V	*BT31, BT, BT32*	E	2494	M54B25-6S5	M			09/02 ▸ 01/06	11531437040	**820422**	97	Y
3.0 i 24V	*BT61, BT62*	E	2979	M54B30	A			09/02 ▸ 01/06	11531437040	**820422**	97	Y
3.0 i 24V	*BT52, BT, BT51*	E	2979	M54B30	M			09/02 ▸ 01/06	11531437040	**820422**	97	Y
Z8 (E52)													
5.0 i V8	*EJ11, EJ12*	E	4941	S62B50	M			03/00 ▸ 07/03	11531407772	**820546**	76	N
CHRYSLER													
Grand Voyager (91>96)													
3.3 i		E	3301	EGA	A		☞8	04/92 ▸ 10/95	4573560	**819875**	87	Y
2.5 TD		D	2499	MOU	M		☞2	10/93 ▸ 10/95	4741778	**820499**	80	N
Grand Voyager (2001>2004)													
3.3 i V6		E	3301	EGA	A			03/01 ▸ 12/01	4778975	**820059**	80	Y
2.4 i 16V		E	2429	EDZ	M			03/01 ▸ 07/04	4573560AB	●**820568**	91	Y
2.5 CRD		D	2499	ENC	M			01/03 ▸ 07/04	4573560AC	●**820568**	91	Y
2.5 CRD		D	2499	ENC	M			03/01 ▸ 12/02	4573560AB	●**820568**	91	Y
Grand Voyager (2004>2008)													
2.4 i 16V		E	2429	EDZ	M			07/04 ▸ 01/08	4573560AB	●**820568**	91	Y
3.3 i V6		E	3301	EGA	A			07/04 ▸ 01/08	4573560AC	●**820568**	91	Y
LHS													
3.5 V6	*LHCP*	E	3523	EGE	A		☞8	01/93 ▸	4573560	**819875**	87	Y
Neon													
2.0 i 16V	*SN7C*	E	1996	ECB	A			10/93 ▸ 12/98	5278144	●**820568**	91	Y
2.0 i 16V	*SM7Y, SM7C*	E	1996	ECB,ECC	M			10/93 ▸ 12/98	5278144	●**820568**	91	Y
New Yorker													
3.5 V6	*LHCH*	E	3523	EGE	A		☞8	01/93 ▸	4573560	**819875**	87	Y
PT Cruiser													
1.6 i 16V	*Y4B*	E	1598	EJD	M			11/01 ▸ 09/04	4973117AA	●**820568**	91	Y
2.0 i 16V	*Y4B9, Z4B9*	E	1996	ECC	A			09/00 ▸ 09/04	5278144AA	●**820568**	91	Y
2.0 i 16V	*Z4B9, Y4B9*	E	1996	ECC	M			09/00 ▸ 09/04	5278144AA	●**820568**	91	Y
2.4 i 16V	*Y4BB, Z4BB*	E	2429	EDZ	A			06/00 ▸ 11/07	5278144AA	●**820568**	91	Y
2.4 i 16V,2.4 i Turbo 16V	*Y4, Z4BB, Y4BB*	E	2429	EDV-223,EDZ	M			06/00 ▸ 11/07	5278144AA	●**820568**	91	Y
PT Cruiser Cabriolet													
2.4 i 16V	*AYB5X*	E	2429	EDZ-143	A			03/04 ▸ 11/07	5278144AA	●**820568**	91	Y
2.4 i 16V,2.4 i Turbo 16V	*AYN5X*	E	2429	EDV-223,EDZ-143	M			03/04 ▸ 11/07	5278144AA	●**820568**	91	Y
Sebring (2000>2005)													
2.0 i 16V		E	1996	ECC	A			03/00 ▸ 03/07	5278144AA	●**820568**	91	Y
2.0 i 16V		E	1996	ECC	M			03/00 ▸ 03/07	5278144AA	●**820568**	91	Y
2.7 i V6 24V		E	2736	EES	A			03/00 ▸ 03/07	4792237AB	**820589**	87	N
Stratus													
2.0 i 16V		E	1996	ECB	A			01/94 ▸	5278144AA	●**820568**	91	Y
2.0 i 16V	*MN6C*	E	1996	ECB	M			01/94 ▸	5278144AA	●**820568**	91	Y

• **New** Nouveau **Nuevo** Novo **Nuovo** Nieuw **Neu** Yeni Новый Nou

Type Ctr.		CC			AC			OE	Valeo	(°)C	
CHRYSLER (.../...)											
Stratus (.../...)											
2.4 i 16V	E	2429	EDZ	A			01/94 ▸	5278144AA	●820568	91	Y
2.4 i 16V	E	2429	EDZ	M			01/94 ▸	5278144AA	●820568	91	Y
Vision											
3.5 V6 *EB6F*	E	3523	EGE	A		☞8	10/92 ▸	4573560	**819875**	87	Y
Voyager (83>91)											
2.5 24V	E	2501	EDM	M		☞8	07/89 ▸ 02/91	4494470	**819875**	87	Y
2.5 24V	E	2501	EDM	A		☞8	03/89 ▸ 02/91	4494470	**819875**	87	Y
3.0	E	2972	EFA	A		☞8	03/89 ▸ 02/91	MD997310	**819875**	87	Y
Voyager (91>95)											
2.5 i 24V *HN5K, HN5KR*	E	2501	EDM	M		☞8	03/91 ▸ 10/95	4494470	**819875**	87	Y
3.3 i *KB5RP, KB5R, HB5R*	E	3301	EGA	A		☞8	04/92 ▸ 10/95	4573560	**819875**	87	Y
2.5 TD *HN5M, HN5MR*	D	2499	MOU	M		☞2	01/93 ▸ 10/95	4741778	**820499**	80	N
Voyager (96>2001)											
2.0 i 16V	E	1996	ECB	M			10/96 ▸ 03/01	4778975	**820059**	80	Y
2.0 i 16V	E	1996	ECB	M			10/96 ▸ 03/01	4495721	●820568	91	Y
2.4 i 16V	E	2429	EDZ	M			01/96 ▸ 03/01	4778975	**820059**	80	Y
2.4 i 16V	E	2429	EDZ	M		☞8	01/96 ▸ 12/97	4573560	**819875**	87	Y
2.4 i 16V	E	2429	EDZ	M			01/98 ▸ 03/01	4573560AB	●820568	91	Y
2.5 i	E	-		M			01/96 ▸ 03/01	4573560AB	●820568	91	Y
3.0 i V6	E	2972	EFA-150	M			01/96 ▸ 03/01	4778975	**820059**	80	Y
3.3 i	E	3301	EGA	A		☞8	10/96 ▸ 12/97	4573560	**819875**	87	Y
3.3 i V6	E	3301	EGA	A			01/96 ▸ 03/01	4778975	**820059**	80	Y
3.3 i V6	E	3301	EGA	A			01/96 ▸ 03/01	4573560AB	●820568	91	Y
3.8 i	E	3778	EGH	A		☞8	10/96 ▸ 12/97	4573560	**819875**	87	Y
3.8 i V6	E	3778	EGH,EGH-164	A			10/96 ▸ 03/01	4778975	**820059**	80	Y
3.8 i V6	E	3778	EGH	A			10/96 ▸ 03/01	4573560AB	●820568	91	Y
2.5 TD	D	2499	ENC	M		☞1	01/96 ▸ 03/01	4778975	**820059**	80	Y
Voyager (2001>2004)											
2.4 i 16V	E	2429	EDZ	A			03/01 ▸	4573560AB	●820568	91	Y
2.4 i 16V	E	2429	EDZ	M			03/01 ▸	4573560AB	●820568	91	Y
3.3 i V6	E	3301	EGA	A			03/01 ▸	4573560AC	●820568	91	Y
Voyager (2004>)											
2.4 i 16V	E	2429	EDZ	A			07/04 ▸	4573560AB	●820568	91	Y
2.4 i 16V	E	2429	EDZ	M			07/04 ▸	4573560AB	●820568	91	Y
3.3 i V6	E	3301	EGA	A			07/04 ▸	4573560AC	●820568	91	Y
CITROËN											
AX (86>91)											
1.4 D *ZAZ/T/TT/U/V*	D	1360	TUD3	M			09/88 ▸ 1991	1338C8	**819897**	89	Y
AX (91>98)											
1.4 D *ZAD/F/G, ZAZ/T/TT/U*	D	1360	TUD3	M			05/91 ▸ 07/94	1338C8	**819897**	89	Y
1.5 D *ZAK/E/ET/F*	D	1527	TUD5	M			07/94 ▸ 07/96	1338C8	**819897**	89	Y
BX											
1.4 GPL *XBERBB*	G	1360	TU3A	M		☞4	07/89 ▸	133837	**819946**	83	Y
1.1 *XBXR*	E	1124	XW7B2	M		☞4	09/82 ▸ 04/88	133837	**819946**	83	Y
1.4 *XBE/C/RB/RBB, XBX/A/D/DBC/T/Y/YE*	E	1360	XY6D, XY6C, TU3A	M		☞4	09/82 ▸ 06/90	133837	**819946**	83	Y
1.6,1.6 GPL,1.6 i *HBH/Z, XBE/A/B/E/EBC, XBF A/L/V/W, XBH/J/P/Y, XBX/B BE/E/EBC/EE/K/S/W/X*	E	1580	XU5S, XU5STR, XU51C, XU5CP XU52C, XU5M, XU5J, XU5JA 171, XU5J2	M		☞4	09/82 ▸	133837	**819946**	83	Y
1.6,1.6 i *HBHYA, XBXBAA*	E	1580	XU52C, XU5S, XU5M	A		☞4	07/84 ▸	133837	**819946**	83	Y
1.9,1.9 i *XBE/G/H/W/Y/Z, XBF/E/F/N P/R/S/SC/T/X/Y/Z, XBH/A/K KB/L/LB/M/N, XBX/G/H/J/M N/TC*	E	1905	XU9, XU9J1, XU9J2, XU92C+ XU92C, XU9S, XU9JA, XU9M	M		☞4	07/84 ▸	133837	**819946**	83	Y

• **New** Nouveau **Nuevo** Novo **Nuovo** Nieuw **Neu** Yeni Новый Nou

			CC		AC			OE	Valeo	(°)C		
CITROËN (.../...)												
BX (.../...)												
1.9 i 16S	*XBEJ, XBFC*	E	1905	XU9J4	M			07/87 ▸	96020348	**819896**	88	Y
1.9,1.9 i	*XBE/GA/HA/YA, XBF/SA/TA YA, XBH/KA/LA, XBX/GA/HA MA*	E	1905	XU9J1, XU92C, XU92C+, XU9J2 XU9S, XU9JA	A		☞4	07/84 ▸	133837	**819946**	83	Y
1.7 D,1.7 TD	*XBE/D/K/L, XBXP, XBH/R/S*	D	1769	XUD7, XUD7TE	M		☞4	10/84 ▸	96159513	**819952**	83	Y
1.7 D,1.7 TD	*XBXP, XBE/D/K/L/X*	D	1769	XUD7TE, XUD7	M		☞4	05/88 ▸	133823	**819950**	83	Y
1.9 D	*XBX/C/CE/F/FE/U/V*	D	1905	XUD9, XUD9A	M			07/83 ▸	93501145	**819937**	81	Y
1.9 D	*XBX/C/CE/CT/F/FB/FE/FT/U/V*	D	1905	XUD9A, XUD9	M		☞4	07/86 ▸	96159513	**819952**	83	Y
1.9 D	*XBH/E/F*	D	1905	XUD9A	M		☞4	08/86 ▸ 04/87	133837	**819946**	83	Y
1.9 D	*XBX/CA/CAA*	D	1905	XUD9A, XUD9	A		☞4	07/83 ▸	96159513	**819952**	83	Y
1.9 D	*XBXCA*	D	1905	XUD9	A			07/83 ▸ 04/87	93501145	**819937**	81	Y
C2												
1.1 i	*JGHFXB, JMHFXB*	E	1124	TU1JP	M			09/03 ▸	1336Q2	**820430**	89	Y
1.1 i	*JGHFXC, JMHFXC*	E	1124	TU1A	M			04/05 ▸	1336Z2	**820977**	103	Y
1.4 i	*JGKFVB, JMKFVB*	E	1360	TU3JP	M			09/03 ▸	1336Q2	**820430**	89	Y
1.4 i	*JMKFVC*	E	1360	TU3A	M			04/05 ▸	1336Z2	**820977**	103	Y
1.6 i 16V ▸ 10401	*JGN/FUC, JMN/FSC/FUC*	E	1587	TU5JP4S, TU5JP4	M			09/03 ▸	1336Q2	**820430**	89	Y
C3 (2002>2005)												
1.1 i	*FCH/FXB/FXC, FRHFXB, FNH/FXB/FXC*	E	1124	TU1JP	M			04/02 ▸	1336Q2	**820430**	89	Y
1.4 i	*FCK/FVE/FVF, FNK/FVE/FVF*	E	1360	TU3JP	A			04/02 ▸	1336Q2	**820430**	89	Y
1.4 i,1.4 i 16V ▸ 10373	*FCK/FU/FUC/FVB/FVC, FNK FUB/FVB/FVC*	E	1360	ET3J4, TU3JP	M			04/02 ▸	1336Q2	**820430**	89	Y
1.6 i 16V ▸ 10401	*FNNFUB, FCN/FU//FUB*	E	1587	TU5JP4	M			04/02 ▸ 05/05	1336Q2	**820430**	89	Y
1.4 HDi	*FR8XZB, FC8/HZ/HZB*	D	1399	DV4TD	M			04/02 ▸ 10/05	1336X1	**820976**	84	N
1.6 HDi 16V	*FC9HXC*	D	1560	DV6ATED4	M			06/05 ▸ 10/05	1336X2	●**820951**	83	Y
C3 (2005>)												
1.1 i	*FCHFXC*	E	1124	TU1A	M			11/05 ▸	1336Z2	**820977**	103	Y
1.4 i	*FCKFVC*	E	1360	TU3A	M			11/05 ▸	1336Z2	**820977**	103	Y
1.4 i	*FCKFVB*	E	1360	TU3JP	M			11/05 ▸	1336Q2	**820430**	89	Y
1.6 HDi 16V	*FL9HXC, FC9HZC, FC9HXC*	D	1560	DV6ATED4,DV6TED4	M			11/05 ▸ 03/07	1336X2	●**820951**	83	Y
C3 (2009>)												
1.1 i	*SCHFV0*	E	1124	TU1AE5	M			03/10 ▸	1336Z2	**820977**	103	Y
1.4 i	*SCKFT0*	E	1360	TU3AE5	M			10/09 ▸	1336Z2	**820977**	103	Y
C3 Pluriel												
1.4 i	*HBKFVB*	E	1360	TU3JP	M			05/03 ▸	1336Q2	**820430**	89	Y
1.4 i	*HBKFVC*	E	1360	TU3A	M			09/05 ▸	1336Z2	**820977**	103	Y
1.6 i 16V ▸ 10401	*HBNFUB*	E	1587	TU5JP4	M			05/03 ▸ 05/05	1336Q2	**820430**	89	Y
C4												
1.4 i 16V ▸ 10436	*LAKFUC, LCKFUC*	E	1360	ET3J4	M			11/04 ▸ 06/05	1336Q1	**820434**	89	Y
1.6 i 16V ▸ 10436	*LANFUC, LCNFUC*	E	1587	TU5JP4	M			11/04 ▸ 06/05	1336Q1	**820434**	89	Y
1.6 i 16V ▸ 10436	*LANFUF, LCNFUF*	E	1587	TU5JP4	A			11/04 ▸ 06/05	1336Q1	**820434**	89	Y
2.0 i 16V	*LARFNC, LCRFNC*	E	1997	EW10J4S, EW10J4	M			11/04 ▸	1338A0	**820431**	89	Y
1.6 HDi 16V	*LC9HZ*	D	1560	DV6TED4	A			03/06 ▸ 05/07	1336X2	●**820951**	83	Y
1.6 HDi 16V	*LG9HXC, LC9HXC, LA9HXC LC9HYB, LA9HZC, LC9HZC LG9HZC, LA9HYC*	D	1560	DV6ATED4,DV6TED4	M			11/04 ▸ 05/07	1336X2	●**820951**	83	Y
2.0 HDi 16V ▸ 10289	*LARHRH, LCRHRH*	D	1997	DW10BTED4	M			11/04 ▸ 01/05	1336X1	**820976**	84	N
2.0 HDi 16V ▸ 10289	*LARHR, LCRHR*	D	1997	DW10BTED4	A			11/04 ▸ 01/05	1336X1	**820976**	84	N

• **New** Nouveau **Nuevo** Novo **Nuovo** Nieuw **Neu** Yeni Новый Nou

			CC			AC			OE	Valeo	(°)C		
CITROËN (.../...)													
C4 (.../...)													
2.0 HDi	*LDRHZ*	D	1997	DW10ATED	M			02/07 ▸	133823	**819950**	83	Y
C4 Picasso (2006>)													
1.8 i 16V	*UA6FYC, UD6FYC*	E	1749	EW7A	M			03/07 ▸	1338A0	**820431**	89	Y
11073 ▸													
2.0 i 16V	*UARFJH, UDRFJH*	E	1997	EW10A	M			03/07 ▸	1338A0	**820431**	89	Y
11073 ▸													
1.6 HDi 16V	*UE9HZH, UA9HZH, UA9HYC*	D	1560	DV6TED4	M			09/06 ▸ 06/07	1336X2	●**820951**	83	Y
▸ 11166	*UA9HZC, UD9HYC, UD9HZC UD9HZH, UA9HYB, UD9HYB*												
C5 (2001>2004)													
1.8 i 16V	*DC6FZB, DE6FZB*	E	1749	EW7J4	M			02/01 ▸	1338A0	**820431**	89	Y
1.8 i 16V	*DC6FZE*	E	1749	EW7J4	A			02/01 ▸	1338A0	**820431**	89	Y
2.0 HPi 16V,2.0 i 16V	*DCR/FNB/FNC/LZB, DER/FNB FNC/LZB/LZC*	E	1997	EW10J4, EW10D	M			02/01 ▸	1338A0	**820431**	89	Y
2.0 i 16V	*DCR/FNE/FNF, DER/FNE/FNF*	E	1997	EW10J4	A			02/01 ▸	1338A0	**820431**	89	Y
3.0 i V6 24V	*DCX/FXB/FXC, DEX/FXB/FXC*	E	2946	ES9J4S	M			02/01 ▸	133873	**820131**	82	N
3.0 i V6 24V	*DCX/FXE/FXF, DEX/FXE/FXF*	E	2946	ES9J4S	A			02/01 ▸	133873	**820131**	82	N
2.0 HDi	*DCR/HYB/HZB, DER/HSB/HYB HZB*	D	1997	DW10ATED, DW10TD	M		☞4	02/01 ▸	133823	**819950**	83	Y
2.0 HDi	*DCR/HZE/HZF, DER/HZE/HZF*	D	1997	DW10ATED	A		☞4	02/01 ▸	133823	**819950**	83	Y
2.2 HDi 16V	*DC4HXB, DE4HXB*	D	2179	DW12TED4	M		☞4	02/01 ▸	133823	**819950**	83	Y
2.2 HDi 16V	*DC4HXE, DE4HXF*	D	2179	DW12TED4	A		☞4	02/01 ▸	133823	**819950**	83	Y
C5 (2004>2007)													
1.8 i 16V	*RC6/FYC/FZB/FZC, RE6/FYC FZB/FZC*	E	1749	EW7A, EW7J4	M			09/04 ▸	1338A0	**820431**	89	Y
10921 ▸													
2.0 i 16V	*RCRFJC, RERFJC*	E	1997	EW10A	M			09/04 ▸	1338A0	**820431**	89	Y
2.0 i 16V	*RCRFJF, RERFJF*	E	1997	EW10A	A			09/04 ▸	1338A0	**820431**	89	Y
3.0 i V6 24V	*RCXFUJ, REXFUJ*	E	2946	ES9A	A			09/04 ▸	133873	**820131**	82	N
1.6 HDi 16V	*RC9HZC, RE9HZC, RC9HYB RE9HYB*	D	1560	DV6TED4	M			09/04 ▸ 05/07	1336X2	●**820951**	83	Y
2.0 HDi 16V	*RCR/HRG/HRH, RER/HRG/HRH*	D	1997	DW10BTED4	M			09/04 ▸ 02/05	1336X1	**820976**	84	N
▸ 10338													
2.2 HDi 16V	*RC4HXE, RE4HXE*	D	2179	DW12TED4	A		☞4	09/04 ▸	133823	**819950**	83	Y
C5 (2008>)													
1.8 i 16V	*RD6FYC*	E	1749	EW7A	M			03/08 ▸	1338A0	**820431**	89	Y
2.0 i 16V	*RDRFJC*	E	1997	EW10A	M			03/08 ▸	1338A0	**820431**	89	Y
2.0 i 16V	*RDRFJF*	E	1997	EW10A	A			03/08 ▸	1338A0	**820431**	89	Y
3.0 i V6	*RDXFVJ*	E	2946	ES9A	A			03/08 ▸	133873	**820131**	82	N
C6													
3.0 i V6 24V	*TDX/FVJ/FVU*	E	2946	ES9A	A			12/05 ▸	133873	**820131**	82	N
C8													
2.0 i 16V	*EAR/FNC, EBR/FJC/FNC*	E	1997	EW10A, EW10J4	M			06/02 ▸	1338A0	**820431**	89	Y
2.0 i 16V	*EBR/FJF/FNF*	E	1997	EW10A, EW10J4	A			06/02 ▸	1338A0	**820431**	89	Y
2.2 i 16V	*EA3FZC, EB3FZC*	E	2230	EW12J4	M			06/02 ▸ 09/05	1338A0	**820431**	89	Y
3.0 i V6 24V	*EAXFWF, EBXFWF*	E	2946	ES9J4S	A			06/02 ▸ 09/05	133873	**820131**	82	N
2.0 HDi 16V	*EARHTB, EBRHTB*	D	1997	DW10ATED4	M		☞4	06/02 ▸	133823	**819950**	83	Y
2.0 HDi 16V	*EAR/HME, EBR/HME/HWB*	D	1997	DW10ATED4	A		☞4	06/02 ▸	133823	**819950**	83	Y
2.2 HDi 16V	*EA4/HWB/HWG, EB4/HWB/HWG*	D	2179	DW12TED4	M		☞4	06/02 ▸ 06/06	133823	**819950**	83	Y
CX													
2.0	*MAM/B/D*	E	1985	M20	M			07/74 ▸ 06/79	95495311	**819838**	86	Y
2.0	*MAM/P/R*	E	1995	829A5, J6RA600	M			07/79 ▸ 1989	95495311	**819838**	86	Y
2.2,2.2 GPL	*MAN/C/R/RBC/S*	E	2165	M22, J6TA500	M			02/75 ▸ 1991	95495311	**819838**	86	Y
2.3,2.3 i,2.3 i Injection	*MAM/E/F/J/K/L/T/N/W/X/Y MAN/A/E*	E	2347	M23	M			01/76 ▸ 07/83	95495311	**819838**	86	Y
2.5 i,2.5 i Turbo 2.5 i Turbo 2	*MAN/G/GA/HH/J/K/KC/P*	E	2500	M25	M			07/83 ▸ 1989	95495311	**819838**	86	Y
2.2 D	*MANG*	D	2165	M22	M			05/78 ▸ 06/79	95495311	**819838**	86	Y

• **New** Nouveau **Nuevo** Novo **Nuovo** Nieuw **Neu** Yeni Новый Nou

Valeo

			Type Ctr.		CC			AC		2 3	OE	Valeo	(°)C
CITROËN (.../...)													
CX (.../...)													
2.5 D,2.5 D Turbo 2.5 D Turbo 2	MAM/M/N/S, MAN/B/C/D/T/U V	D		2500	M25	M			02/79 ▸ 1991	95495311	**819838**	86	Y
Evasion (94>98)													
1.8 i	U6UE	E		1761	XU7JP	M		☞4	07/96 ▸ 09/98	133837	**819946**	83	Y
2.0 i,2.0 i Turbo CT 7196 ▸	U6U/A/B	E		1998	XU10J2CTEL3, XU10J2C	M		☞4	07/94 ▸ 09/98	133837	**819946**	83	Y
1.9 TD	U6U/C/J/J/8/J/T	D		1905	XUD9BTF, XUD9TF, XUD9TEF	M		☞4	10/94 ▸ 09/98	133823	**819950**	83	Y
2.1 TD 12V	U6UW	D		2088	XUD11BTE	M		☞4	04/96 ▸ 09/98	133823	**819950**	83	Y
Evasion (98>2002)													
1.8 i	U6U/E/E/1	E		1761	XU7JP	M		☞4	10/98 ▸ 05/02	133837	**819946**	83	Y
2.0 i 16V	AFRFNC	E		1997	EW10J4	M			07/00 ▸ 05/02	1338A0	**820431**	89	Y
2.0 i 16V	AFRFNF	E		1997	EW10J4	A			07/00 ▸ 05/02	1338A0	**820431**	89	Y
2.0 i 16V	AFRFNC	E		1997	EW10J4	M			07/00 ▸ 05/02	1336Q1	**820434**	89	Y
2.0 i 16V	AFRFNF	E		1997	EW10J4	A			07/00 ▸ 05/02	1336Q1	**820434**	89	Y
2.0 i,2.0 i Turbo CT	U6U/A/B/B/T	E		1998	XU10J2C, XU10J2CTEL3	M		☞4	10/98 ▸ 05/02	133837	**819946**	83	Y
2.0 i 16V	AFRFVB	E		1998	XU10J4R	M			10/98 ▸ 05/02	133839	**820471**	83	Y
1.9 TD	U6U/C/C/T	D		1905	XUD9BTF	M		☞4	10/98 ▸ 05/02	133823	**819950**	83	Y
2.0 HDi	AFRHZA	D		1997	DW10ATED	M		☞4	08/99 ▸ 05/02	133823	**819950**	83	Y
2.1 TD 12V	U6U/W/W/T	D		2088	XUD11BTE	M		☞4	10/98 ▸ 05/02	133823	**819950**	83	Y
LN/LNA													
1.0		E		954	XV8	M		☞4	01/84 ▸ 1986	133837	**819946**	83	Y
1.1	RBR/G/GA/J/K/KA	E		1124	XW7, XW7B1	M		☞4	07/82 ▸ 1986	133837	**819946**	83	Y
Saxo (96>99)													
1.1 i	S1HFXB	E		1124	TU1JP	M			03/96 ▸ 08/99	1336Q2	**820430**	89	Y
1.4 i	S0KFWB	E		1360	TU3JP	M			11/98 ▸ 08/99	1336Q2	**820430**	89	Y
1.5 D	S0V/JXB/JYF/JZC/JZE/JZF, S3VJZF S1V/JXB/JYF/JZC/JZE/JZF	D		1527	TUD5, TUD5B	M			05/96 ▸ 08/99	1338C8	**819897**	89	Y
Saxo (99>)													
1.1 i	S1HFXB, S3HFXB, S0H/FXB	E		1124	TU1JP	M			09/00 ▸	1336Q2	**820430**	89	Y
1.4 i GPL		F		1360	TU3JP	M			02/02 ▸ 12/03	1336Q2	**820430**	89	Y
1.4 i	S0K/FWB/FXF, S6KFWB, S1K/FWB/FXF	E		1360	TU3JP	M			09/99 ▸ 12/03	1336Q2	**820430**	89	Y
1.4 i	S0K/FWL, S1K/FWL/FXD	E		1360	TU3JP	A			09/99 ▸ 12/03	1336Q2	**820430**	89	Y
1.6 i,1.6 i 16V	S6N/FTB/FXB/FXE	E		1587	TU5JP, TU5J4	M			09/99 ▸	1336Q2	**820430**	89	Y
1.5 D	S0V/JXB/JZC/JZF, S3VJXB, S1V/JXB JZF	D		1527	TUD5B, TUD5	M			09/99 ▸	1338C8	**819897**	89	Y
Synergie (95>98)													
1.8 i	U6UE	E		1761	XU7JP	M		☞4	07/96 ▸ 09/98	133837	**819946**	83	Y
2.0 i 7196 ▸	U6UB	E		1998	XU10J2C	M		☞4	07/96 ▸ 09/98	133837	**819946**	83	Y
1.9 TD	U6U/C/J	D		1905	XUD9TEF, XUD9BTF	M		☞4	10/95 ▸ 09/98	133823	**819950**	83	Y
Synergie (98>2002)													
2.0 i 16V	AFRFNC	E		1997	EW10J4	M			07/00 ▸ 05/02	1336Q1	**820434**	89	Y
2.0 i 16V	AFRFNF	E		1997	EW10J4	A			07/00 ▸ 05/02	1336Q1	**820434**	89	Y
2.0 i	U6UB	E		1998	XU10J2C	M		☞4	10/98 ▸ 05/02	133837	**819946**	83	Y
1.9 TD	U6UC	D		1905	XUD9BTF	M			10/98 ▸ 05/02	133823	**819950**	83	Y
2.0 HDi	AFRHZA	D		1997	DW10ATED	M			08/99 ▸ 05/02	133823	**819950**	83	Y
Visa													
1.0		E		954	XV8	M		☞4	11/83 ▸ 1987	133837	**819946**	83	Y
1.1	VDV/G/GB/GE/K/KB	E		1124	XW7B1, XW7	M		☞4	07/83 ▸ 1988	133837	**819946**	83	Y
1.1	VDV/B/BG/G/GD	E		1124	XW7, XM7, XW7B1, XW7B2	M		☞4	10/78 ▸ 1988	133837	**819946**	83	Y
1.2	VDV/E/H/L	E		1219	129	M		☞4	07/80 ▸ 07/83	133837	**819946**	83	Y
1.4	VDVS, VDP/E/EA	E		1360	XY8, XY7	M		☞4	03/82 ▸ 1988	133837	**819946**	83	Y
1.4,1.4 i	VDV/R/RB	E		1360	156, 150, XY7CP, XY7	M		☞4	03/81 ▸ 1987	133837	**819946**	83	Y
1.6 i	VDPD	E		1580	XU5J	M		☞4	10/84 ▸ 07/86	133837	**819946**	83	Y
1.6 i		E		1580	XU5J, XU5JA	M		☞4	01/85 ▸ 1988	133837	**819946**	83	Y

• **New** Nouveau **Nuevo** Novo **Nuovo** Nieuw **Neu** Yeni Новый Nou

Type Ctr.		cc		AC		2 3	OE	Valeo	(°)C	
CITROËN (.../...)										
Visa (.../...)										
1.8 D *VDV/T/TA/TE*	D	1769	XUD7	M			03/84 ▸ 1988	93501145	**819937**	81	Y
Xantia (93>97)										
1.6 i *X12B*	E	1580	XU5JP	M		☞4	04/97 ▸ 12/97	133837	**819946**	83	Y
7196 ▸											
1.8 i 16V *X13H, X15C, X16C, X12/H*	E	1761	XU7JP4	M			07/95 ▸ 12/97	133839	**820471**	83	Y
1.8 i *X11/E, X16G, X12/E/F*	E	1761	XU7JB, XU7JP	M		☞4	07/96 ▸ 12/97	133837	**819946**	83	Y
7196 ▸											
1.8 i *X19B*	E	1761	XU7JP	A		☞4	04/97 ▸ 12/97	133837	**819946**	83	Y
7196 ▸											
2.0 i 16V *X14/F, X15/A/F*	E	1998	XU10J4	M		☞4	03/93 ▸ 06/95	133826	**819934**	89	Y
2.0 i Turbo CT *X11/F, X16/D/E*	E	1998	XU10J2CTEL3	M		☞4	07/95 ▸ 12/97	133837	**819946**	83	Y
2.0 i 16V *X13/E, X19/C/E*	E	1998	XU10J4R	M			07/95 ▸ 12/97	133839	**820471**	83	Y
2.0 i *X15E, X17B*	E	1998	XU10J2C	A		☞4	09/93 ▸ 12/97	133837	**819946**	83	Y
3.0 i V6 24V *X14D*	E	2946	ES9J4	M			11/96 ▸ 12/97	133873	**820131**	82	N
3.0 i V6 24V *X15D*	E	2946	ES9J4	A			03/97 ▸ 12/97	133873	**820131**	82	N
1.9 TD *X17/E/E/T/F/T/F, X18/A/E*	D	1905	XUD9TEF, XUD9BTF	M			06/93 ▸ 12/97	133839	**820471**	83	Y
1.9 D,1.9 SD *X14H, X16A, X12/D*	D	1905	XUD9SD, XUD9A	M		☞4	06/93 ▸ 12/97	133823	**819950**	83	Y
1.9 D *X13/C/L*	D	1905	XUD9A	A		☞4	08/93 ▸ 12/97	133823	**819950**	83	Y
Xantia (97>2002)										
1.6 i *X1BFZF*	E	1580	XU5JP	M		☞4	12/97 ▸ 05/02	133837	**819946**	83	Y
1.8 i *X2LFXF, X1L/6AG/FXF*	E	1761	XU7JB, XU7JP	M		☞4	12/97 ▸ 05/02	133837	**819946**	83	Y
1.8 i 16V,1.8 i GPL 16V *X1L/FYB/FYC/FYF, X2L/FYB FYC/FYF*	E	1761	XU7JP4	M			12/97 ▸ 05/02	133839	**820471**	83	Y
1.8 i 16V *X1LFYM*	E	1761	XU7JP4	A			12/97 ▸ 05/02	133839	**820471**	83	Y
2.0 i 16V *X2RFVF, X7RFVF, X1R/FVF FVG*	E	1998	XU10J4R	M			12/97 ▸ 05/02	133839	**820471**	83	Y
2.0 i Turbo CT *X2RGXF, X7RGXF, X1R/GXF*	E	1998	XU10J2CTEL3	M		☞4	12/97 ▸ 05/02	133837	**819946**	83	Y
2.0 i *X1RFXM, X2RFXM*	E	1998	XU10J2C	A		☞4	12/97 ▸ 05/02	133837	**819946**	83	Y
2.0 i 16V *X1RFVU, X2RFVM*	E	1998	XU10J4R	A			12/97 ▸ 05/02	133839	**820471**	83	Y
3.0 i V6 24V *X2XFZF, X7XFZF*	E	2946	ES9J4	M			12/97 ▸ 05/02	133873	**820131**	82	N
3.0 i V6 24V *X1XFZM, X2XFZM*	E	2946	ES9J4	A			12/97 ▸ 05/02	133873	**820131**	82	N
1.9 SD,1.9 TD *X1D/HWF/HXF, X2D/HWF/HXF*	D	1905	XUD9BTF, XUD9SD	M			12/97 ▸ 05/02	133839	**820471**	83	Y
1.9 TD *X1DHXM, X2DHXM*	D	1905	XUD9BTF	A			12/97 ▸ 05/02	133839	**820471**	83	Y
2.0 HDi *X1R/HYF/HZB/HZF, X7RHZF X2R/HYE/HYF/HZF*	D	1997	DW10ATED,DW10TD	M			10/98 ▸ 05/02	133823	**819950**	83	Y
XM (89>94)										
2.0 i *Y3AC*	E	1998	XU10J2	M		☞4	01/93 ▸ 06/94	133837	**819946**	83	Y
5901 ▸											
2.0 i *Y3A/CA/HA*	E	1998	XU10J2	A		☞4	01/90 ▸ 06/94	133837	**819946**	83	Y
3.0 i V6,3.0 i V6 24V *Y3C/M/N/U*	E	2963	ZPJ, ZPJ4	M		☞1,4	05/93 ▸ 06/94	96101599	**819930**	78	Y
3.0 i V6 *Y3CNA*	E	2963	ZPJ	A		☞1,4	07/93 ▸ 06/94	96101599	**819930**	78	Y
3.0 i V6,3.0 i V6 24V *Y3A/D/G/L/W*	E	2975	ZPJ, ZPJ4	M		☞1,4	05/89 ▸ 06/94	96101599	**819930**	78	Y
3.0 i V6 *Y3A/GA/WA*	E	2975	ZPJ	A		☞1,4	05/90 ▸ 06/94	96101599	**819930**	78	Y
2.1 D D12 *Y3AE*	D	2138	XUD11A	M		☞4	09/89 ▸ 12/90	133812	**819929**	85	Y
▸ 5166											
XM (94>2001)										
2.0 i Turbo CT *Y4G/G/M*	E	1998	XU10J2TE	M		☞4	07/94 ▸ 07/01	133837	**819946**	83	Y
2.0 i 16V *Y4GB, Y4TX, Y4C/Z*	E	1998	XU10J4R	M			07/94 ▸ 07/01	133839	**820471**	83	Y
2.0 i Turbo CT *Y4T/S/T*	E	1998	XU10J2TE	A		☞4	07/94 ▸ 07/01	133837	**819946**	83	Y
2.0 i 16V *Y4T/U/V*	E	1998	XU10J4R	A			07/94 ▸ 07/01	133839	**820471**	83	Y
3.0 i V6 24V *Y4WG*	E	2946	ES9J4	M			07/97 ▸ 07/01	133873	**820131**	82	N
3.0 i V6 24V *Y4W/H/K*	E	2946	ES9J4	A			07/97 ▸ 07/01	133873	**820131**	82	N
3.0 i V6,3.0 i V6 24V *Y4G/N/R/U*	E	2963	ZPJ, ZPJ4	M		☞1,4	07/94 ▸ 05/99	96101599	**819930**	78	Y
3.0 i V6 *Y4T/N/R*	E	2963	ZPJ	A		☞1,4	07/94 ▸ 05/99	96101599	**819930**	78	Y
2.5 TD Turbo D *Y4RM, Y4N/X/Y*	D	2446	DK5ATE	M			07/94 ▸ 07/01	1336F9	**819954**	85	Y
XM (94>2001)										
2.5 TD Turbo D *Y4RM, Y4NY, Y4NX*	D	2446	DK5ATE	M			07/94 ▸ 07/01	133846	**819956**	84	Y
Xsara (97>2000)										
1.4 i,1.4 i GPL *N0K/FXB/FXF, N1K/FXB/FXF N2K/FXB/FXF*	E	1360	TU3JP	M			11/98 ▸ 08/00	1336Q2	**820430**	89	Y

• **New** Nouveau **Nuevo** Novo **Nuovo** Nieuw **Neu** Yeni Новый Nou

	Type Ctr.		CC		AC			OE	Valeo	(°)C		
CITROËN (.../...)												
Berlingo (96>2002) (.../...)												
1.9 D *MBW/JYB/JYP/JZC/JZF, MEW.JZF, MCW JYB/JZF, MFW/JYB/JZF*	D	1868	DW8, DW8B	M		☞4	07/98 ▸ 12/02	133823	**819950**	83	Y	
1.9 D *MCD9BE, MED9BE, MBD/9BE, MFD/9BE JYF*	D	1905	XUD9A	M		☞4	07/96 ▸ 12/02	133823	**819950**	83	Y	
2.0 HDi *MBR/HYB, MCR/HYB/HYF, MFR HYB/HYF*	D	1997	DW10TD	M		☞4	10/99 ▸ 12/02	133823	**819950**	83	Y	
Berlingo (2002>)												
1.1 i *GBHFXB*	E	1124	TU1JP	M			12/02 ▸	1336Q1	**820434**	89	Y	
1.4 i *GBK/FVC/FWB, GJK/FVC/FWB*	E	1360	TU3A, TU3JP	M			12/02 ▸	1336Q1	**820434**	89	Y	
1.6 i 16V *GCNFUB, GJNFUB, GBN/FUB*	E	1587	TU5JP4	M			12/02 ▸ 09/05	1336Q1	**820434**	89	Y	
1.6 HDi,1.6 HDi 16V *GC9HXC, GJ9HXC, GC9HW GB9HXC, GB9HWC, GJ9HW*	D	1560	DV6ATED4,DV6BTED4	M			01/06 ▸ 06/07	1336X2	●**820951**	83	Y	
1.9 D *GCW.JYB, GEW.JYB, GJW.JYB, GBW/JYB*	D	1868	DW8B	M		☞4	12/02 ▸	133823	**819950**	83	Y	
2.0 HDi *GCR/HYB, GER/HYB, GBR/HYB GJR/HYB/HYK*	D	1997	DW10TD	M		☞4	12/02 ▸	133823	**819950**	83	Y	
C15												
1.0 *VDP/L*	E	954	XV8	M			11/86 ▸ 05/88	133837	**819946**	83	Y	
1.1 *VDP/S/T*	E	1118	E1A	M			07/87 ▸ 07/88	97517097	**819889**	89	Y	
1.1 *VDP/A/F*	E	1124	XW7B1	M			10/84 ▸ 05/88	133837	**819946**	83	Y	
1.3 *VDP/U/V/W*	E	1294	G1A	M			07/87 ▸ 07/88	97517097	**819889**	89	Y	
1.4,1.4 i *VDSA, VDP/J/K/M*	E	1360	XY7,XY7CP	M			07/86 ▸ 05/88	133837	**819946**	83	Y	
1.7 D *VDP/B/BF/G/P*	D	1769	XUD7	M		☞4	08/89 ▸ 05/92	96159513	**819952**	83	Y	
1.7 D 5651 ▸ *VDSX, VDP/B/BF/G/P*	D	1769	XUD7	M		☞4	04/92 ▸ 02/01	133823	**819950**	83	Y	
1.7 D ▸ 5562 *VDP/B/BF/G/P/PF*	D	1769	XUD7	M			10/84 ▸ 01/92	93501145	**819937**	81	Y	
1.9 D *VDV/V/W/Y*	D	1868	DW8B	M		☞4	03/01 ▸	133823	**819950**	83	Y	
C25 (81>90)												
1.8 *280/A10/C10*	E	1796	XM7T	M		☞5,8	11/81 ▸ 1990	91500723	**819900**	82	Y	
2.0 *280/B20/G20*	E	1971	XN1T	M		☞5,8	11/81 ▸ 1990	91500723	**819900**	82	Y	
1.9 D *280G*	D	1905	XUD9A	M		☞4	12/87 ▸ 1990	96005005	**819936**	89	Y	
2.5 D,2.5 TD *280/B50/B90/G50/G52/G90*	D	2500	U25	M			07/87 ▸ 1990	95495311	**819838**	86	Y	
C25 (90>94)												
1.8 *290/A11/C11*	E	1796	XM7T	M		☞5,8	09/90 ▸ 02/94	91500723	**819900**	82	Y	
2.0 *290/A22/A42/B22/B42/B44/C22/C42/C44 G22/G42/G44/H22/H42/J32/J42/K32/K42 L32/L42*	E	1971	XN1TA CP, XN1T, XN1TA	M		☞5,8	09/90 ▸ 02/94	91500723	**819900**	82	Y	
1.9 D *290/B62/C62/G62/H62/M62/S62*	D	1905	XUD9A, XUD9AL	M		☞4	09/90 ▸ 02/94	96005005	**819936**	89	Y	
1.9 TD *290/A72/B72/C72/D72/G72 H72/V72*	D	1929	M705	M			09/90 ▸ 02/94	133804	**819936**	89	Y	
2.5 D,2.5 TD *290/A62/B52/B54/B90/B92 B94/C52/C54/C92/C94/G52 G54/G92/G94/GJ2/H52/H92 J52/J92/K52/L52/L92*	D	2500	U25	M			09/90 ▸ 02/94	95495311	**819838**	86	Y	
C32												
2.2 D *BFBB*	D	2175	B22	M		☞10	11/73 ▸ 12/79	5428849	**819849**	80	Y	
C35												
2.0 *BFBC*	E	1985	B20	M		☞10	11/73 ▸	95588361	**819915**	86	Y	
2.2 D *BFBD*	D	2175	B22	M		☞10	03/74 ▸ 12/79	5428849	**819849**	80	Y	
2.5 D *BFBG*	D	2500	B25	M		☞10	01/80 ▸	5428849	**819849**	80	Y	
Dispatch (95>2003)												
1.6 i *U6U/G/T*	E	1581	160A	M		☞1	09/95 ▸ 12/03	1336J1	**820433**	87	Y	
1.9 D,1.9 TD *U6U/F/K/R/U*	D	1905	XUD9TF, XUD9A	M		☞4	09/95 ▸	133823	**819950**	83	Y	

• **New** Nouveau **Nuevo** Novo **Nuovo** Nieuw **Neu** Yeni Новый Nou

			CC		AC				OE	Valeo	(°)C	
CITROËN (.../...)												
Dispatch (95>2003) (.../...)												
2.0 HDi	*BBRHZA, BERHXA, BHRHZB BYRHXA, BZRHXA, BAR/HXA HZA*	D	1997	DW10ATED,DW10BTED,DW10CTED	M			09/00 ▸ 12/03	133823	**819950**	83	Y
Dispatch (2004>2006)												
1.9 D		D	1868	DW8B	M		☞4	01/04 ▸	133823	**819950**	83	Y
2.0 HDi		D	1997	DW10BTED+L4, DW10BTED	M		☞4	01/04 ▸	133823	**819950**	83	Y
Dispatch (2007>)												
2.0 i 16V	*XERFJC*	E	1997	EW10A	M			03/07 ▸	1338A0	**820431**	89	Y
1.6 HDi 16V	*XC9HUC, XT9HUC, XV9HUC XS9HUC, XW9HUC, XU9HUC XA9HUC*	D	1560	DV6UTED4	M			01/07 ▸ 06/07	1336X2	●**820951**	83	Y
Jumper (94>2001)												
2.0 i	*231/A22/A24/A32/B22/B24/C22/C24/G22 G32/H22/H32/N22/N24, 232/B22/F22 G22/H22/J22/K22/L22/N22/V22/V24 321A34, 233/B22/D22/F22/G22/H22 J22/K22/L22/N22*	E	1998	XU10J2U	M		☞4	02/94 ▸ 12/01	133837	**819946**	83	Y
1.9 D,1.9 TD	*231/A32/A62/A72/A74/A82 A84/B72/B74/B82/B84/C32 C62/C72/C82/E72/G62/G72 G82/H62/H72/H82/V62/V72 V82, 232/B72/B82/C32/C62 C72/C82/G72/G82/H72/H82 V82*	D	1905	XUD9UTF, XUD9A, XUD9AU	M		☞4	02/94 ▸ 12/01	133823	**819950**	83	Y
1.9 TD	*231/A72/A82/B72/B82/C72 C82/E72/G72/G82/H72/H82 V72/V82, 232/B72/B82/C72 C82/G72/G82/H72/H82/V82*	D	1905	XUD9UTF, XUD9TEF	M			02/94 ▸ 12/01	133839	**820471**	83	Y
2.5 D,2.5 TD,2.5 TDi	*231/A52/B42/B44/B52/B54 B92/B94/C42/C44/C92/G42 G52/G92/H42/H52/H92/J42 J52/J92/N42/V44/V52/V54 V92/V94, 232/B42/B44/B52 B54/B92/B94/F42/F52/F92 G42/G52/G54/G92/H42/H44 H52/H54/H92/J42/J44/J52 J54/J92/J94/K42/K44/K52 K54/K92/K94/L42/L52/L54 L92/N42/N44/N5*	D	2446	DJ5TED, DJ5, DJ5T	M		☞4	02/94 ▸ 12/01	133838	**819953**	84	Y
2.5 D,2.5 TD,2.5 TDi	*231/A52/B42/B44/B52/B54 B92/B94/C42/C44/C92/G42 G52/G92/H42/H52/H92/J42 J52/J92/N42/V44/V52/V54 V92/V94, 232/B42/B44/B52 B54/B92/B94/F42/F52/F92 G42/G52/G54/G92/H42/H44 H52/H54/H92/J42/J44/J52 J54/J92/J94/K42/K44/K52 K54/K92/K94/L42/L52/L54 L92/N42/N44/N5*	D	2446	DJ5TED, DJ5T, DJ5	M		☞4	02/94 ▸ 12/01	1336F9	**819954**	85	Y
2.8 D	*232*	D	2798	8140-63	M		☞4,8	06/99 ▸ 12/01	133890	**820432**	82	Y
Jumper (2002>2006)												
2.0 i	*ZAT/MF, ZBT/MF/MP, ZCT/MF/MM*	E	1998	XU10J2U	M		☞4	01/02 ▸ 06/06	133837	**819946**	83	Y
2.0 HDi	*ZAA/MF/MP, ZBA/MD/MF/MP*	D	1997	DW10UTD	M		☞4	01/02 ▸ 06/06	133823	**819950**	83	Y
2.2 HDi	*ZAR/MF/MP, ZBR/MD/MF/MH MP, ZCR/MD/MF/MH/MM*	D	2179	DW12TED	M		☞4	01/02 ▸ 06/06	133823	**819950**	83	Y
2.8 HDi	*ZAP/MF/MP, ZBP/MD/MF/MH MP, ZCP/MD/MF/MH/MM*	D	2798	F28TDCR	M		☞4,8	01/02 ▸ 06/06	133890	**820432**	82	Y
Jumpy (95>2003)												
1.6 i	*U6U/G/N/N/R/T/T/5/T/6/T/8/T/9*	E	1581	160A	M		☞1	09/95 ▸	1336J1	**820433**	87	Y

• **New** Nouveau **Nuevo** Novo **Nuovo** Nieuw **Neu** Yeni Новый Nou

			cc			AC			OE	Valeo	(°)C	
CITROËN (.../...)												
Jumpy (95>2003) (.../...)												
2.0 i 16V	*BBRFNC, BDRFNC, BERFNC BZRFNC, BAR/FNC*	E	1997	EW10J4	M			09/00 ▸ 12/03	1336Q1	**820434**	89	Y
2.0 i 16V	*BARFNF, BDRFNF*	E	1997	EW10J4	A			01/01 ▸ 12/03	1336Q1	**820434**	89	Y
1.9 D	*BBWJZA, BDWJZA, BEWJZA, BVWJZA BXWJZA, BZWJZA, BAW/JZA*	D	1868	DW8	M		☞4	05/98 ▸	133823	**819950**	83	Y
1.9 D,1.9 TD	*BUDHXA, BWDHXA, BYDHXA BZDHXA, BAD/HXA, U6K/S/U U/R, U6U/F/H/K/L/P/R/R/8 R/9/S/5/S/6/S/8/S/9/U/U/9*	D	1905	XUD9BTF, XUD9TF, XUD9A	M		☞4	09/95 ▸	133823	**819950**	83	Y
Jumpy (2004>2006)												
2.0 i 16V	*BERFNC, BXRFNC, BZRFNC BBR/FNC*	E	1997	EW10J4	M			01/04 ▸	1336Q1	**820434**	89	Y
1.9 D	*BVWJYB, BXWJYB, BZWJYB, BTW/JYB*	D	1868	DW8B	M		☞4	01/04 ▸	133823	**819950**	83	Y
2.0 HDi,2.0 HDi 16V	*BBR/HXB/HZB, BER/HXB/HZB BURHZB, BSR/HXB/HZB, BWR HXB/HZB, BZRHWB, BYR/HWB HXB/HZB*	D	1997	DW10BTED+L4, DW10BTED DW10ATED4	M		☞4	01/04 ▸	133823	**819950**	83	Y
Jumpy (2007>)												
2.0 i 16V	*XERFJC*	E	1997	EW10A	M			03/07 ▸	1338A0	**820431**	89	Y
1.6 HDi 16V	*XS9HUC, XU9HUC, XT9HUC XC9HUC, XV9HUC, XW9HUC XA9HUC*	D	1560	DV6UTED4	M			01/07 ▸ 06/07	1336X2	●**820951**	83	Y
Nemo												
1.4 i	*AAKFVC*	E	1360	TU3A	M			12/07 ▸	1336Q1	**820434**	89	Y
1.4 i	*AAKFVC*	E	1360	TU3A	M			12/07 ▸	1336Q2	**820430**	89	Y
Relay (94>2001)												
2.0 i	*231/A22/G22, 232/A22/B22/G22, 233 G22/L22*	E	1998	XU10J2U	M		☞4	02/94 ▸	133837	**819946**	83	Y
1.9 D,1.9 TD	*231/A62/A72, 232/A62/A72 E62/E82*	D	1905	XUD9UTF, XUD9A	M		☞4	02/94 ▸	133823	**819950**	83	Y
1.9 TD	*231/A72, 232/A72/E82*	D	1905	XUD9UTF	M			02/94 ▸ 12/01	133839	**820471**	83	Y
2.0 HDi	*231/AJ2/VJ2*	D	1997	DW10TD	M			09/01 ▸ 12/01	133823	**819950**	83	Y
2.5 D,2.5 TD,2.5 TDi	*231/B42/B52/B92/G52/V52 232/B42/B52/B92/G52/G92 J42/J52/J92/K52/K92/L52 L92/V52, 233/B42/B52/B92 G52/G92/J42/J52/J92/K52 K92/L92*	D	2446	DJ5,DJ5T,DJ5TED	M			02/94 ▸ 12/01	1336F9	**819954**	85	Y
2.5 D,2.5 TD	*231/B52/B92/G52, 232/B52 B92/G52/G92/J52/J92/K52 K92/L52/L92, 233/B52/B92 G52/G92/J52/J92/K52/K92 L92*	D	2446	DJ5T, DJ5	M		☞4	02/94 ▸	133838	**819953**	84	Y
2.8 HDi	*231/AL2/JL2/VH2*	D	2798	8140-43S	M			09/00 ▸ 12/01	133890	**820432**	82	Y
Relay (2002>2006)												
2.0 i	*ZATMF, ZBTMF*	E	1998	XU10J2U	M		☞4	01/02 ▸	133837	**819946**	83	Y
2.0 HDi	*ZAA/MF, ZBA/MD/MF*	D	1997	DW10UTD	M			01/02 ▸ 06/06	133823	**819950**	83	Y
2.2 HDi	*ZAR/MF, ZBR/MD/MF, ZCR/MD MH/MM*	D	2179	DW12TED	M			01/02 ▸ 06/06	133823	**819950**	83	Y
2.8 HDi	*ZBP/MD/MF, ZCP/MD/MH/MM*	D	2798	F28TDCR	M		☞4,8	01/02 ▸	133890	**820432**	82	Y
DACIA												
1310												
1.3		E	1289	810	M		☞10	12/85 ▸	7701348068	**819924**	89	N
Logan												
1.4 MPI	*FS0E, LS0E, FS0B, LS0A LS0G, KS0E, FS0A, LS0C KS0A, KS0C*	E	1390	K7J.7.10	M		☞4	09/04 ▸	7700872554	**820025**	89	Y

• **New** Nouveau **Nuevo** Novo **Nuovo** Nieuw **Neu** Yeni Новый Nou

Type Ctr.		CC		AC		2 3	OE	Valeo	(°)C	
DACIA (.../...)										
Logan (.../...)										
1.6 MPI *LS0T*	E	1588	K7M.7.14	M		☞4	10/06 ▸	7700872554	**820025**	89	Y
1.6 MPI,1.6 i,1.6 i 16V *KS0F, LS0P, US0D, LS0B FS0F, LS0D, KS0D, LS0F LS0M, US0F, LS0H, US0B KS0M, KS0B, LS0V, KS0H LS0L, KS0P*	E	1598	K7M.7.10, K4M.6.90, K4M.6.94	M		☞4	09/04 ▸	7700872554	**820025**	89	Y
1.5 dCi *LS0J, LS0Y, FS0J, LS00 KS00, KS0J*	D	1461	K9K.7.90, K9K.7.94	M		☞4	09/05 ▸	8200374994	**820537**	89	Y
Solenza										
1.4 i *B41C, B41A, B41B*	E	1390	EJ7.262	M			04/03 ▸	7700858802	**820009**	91	Y
SuperNova										
1.4 i *B41D, B41B, B41A*	E	1390	E7J.260MD, E7J.260MB E7J.260MA	M			07/00 ▸	7700858802	**820009**	91	Y
DAEWOO										
Aranos										
1.5 i 16V *JF19V1*	E	1498	A15MF	M			07/96 ▸ 10/97	03038094	**819935**	92	Y
1.8 i *JF19B1, JF19B*	E	1796	C18LE	M			02/95 ▸	92061279	**820435**	87	Y
2.0 i *JF19Y1*	E	1998	C20LE	M			02/95 ▸ 04/98	92061279	**820435**	87	Y
Espero										
1.5 i 16V *JF19V1*	E	1498	A15MF	M			09/93 ▸ 05/99	03038094	**819935**	92	Y
2.0 i *JF19Y1*	E	1998	C20LE	M			09/93 ▸ 05/99	92061279	**820435**	87	Y
2.0 i *JA19Y1*	E	1998	C20LE	A			09/93 ▸ 05/99	92061279	**820435**	87	Y
Evanda										
2.0 i 16V,2.0 i GPL 16V *KLAL, KLALF6*	E	1998	C20SED	M			08/02 ▸ 05/05	92067408	**820437**	87	Y
2.0 i 16V *KLALA6*	E	1998	C20SED	A			08/02 ▸ 05/05	92067408	**820437**	87	Y
Kalos										
1.4 i GPL 16V	G	1399	E-TECII-G	M			01/03 ▸	96282726	**820535**	88	Y
1.4 i *SF48A1*	E	1399	F14S3	A			05/03 ▸ 03/04	96143939	**820262**	87	Y
1.4 i *KLASF4*	E	1399	F14S3	M			09/02 ▸ 07/05	96143939	**820262**	87	Y
1.2 i *KLASF4*	E	1150	T4	M		☞7,8	01/03 ▸	94580182	**820438**	82	Y
1.4 i 16V *KLASF4*	E	1399	E-TECII	M			01/03 ▸	96282726	**820535**	88	Y
1.4 i 16V	E	1399	E-TECII	A			04/03 ▸	96282726	**820535**	88	Y
Lacetti										
1.6 i GPL 16V	F	1598	A16DMS-GPL	M			10/03 ▸ 12/04	96143939	**820262**	87	Y
1.6 i GPL 16V	G	1598	A16DMS-G	M			10/03 ▸	96282726	**820535**	88	Y
1.8 i GPL 16V	F	1799	H18D-GPL	M			10/03 ▸ 12/04	96143939	**820262**	87	Y
1.8 i GPL 16V	G	1799	H18D-G	M			10/03 ▸	96282726	**820535**	88	Y
1.6 i 16V *KLANF1*	E	1598	A16DMS	M			10/03 ▸	96282726	**820535**	88	Y
1.6 i 16V *KLANA1*	E	1598	A16DMS	A			10/03 ▸	96282726	**820535**	88	Y
1.6 i 16V *KLANA1*	E	1598	A16DMS	A			10/03 ▸ 12/04	96143939	**820262**	87	Y
1.6 i 16V *KLANF1*	E	1598	A16DMS	M			10/03 ▸ 12/04	96143939	**820262**	87	Y
1.8 i 16V *KLANF1*	E	1799	H18D	M			10/03 ▸	96282726	**820535**	88	Y
1.8 i 16V *KLANF1*	E	1799	H18D	A			10/03 ▸	96282726	**820535**	88	Y
1.8 i 16V *KLANF1*	E	1799	H18D	A			10/03 ▸ 12/04	96143939	**820262**	87	Y
1.8 i 16V *KLANF1*	E	1799	H18D	M			10/03 ▸ 12/04	96143939	**820262**	87	Y
Lanos										
1.3 i *TF69CE, TF08CE, TF48CE*	E	1349	A13SMS	M			09/97 ▸ 07/05	96143939	**820262**	87	Y
1.5 i *TA48YE, TA08YE, TA69YE*	E	1498	A15SMS	A			09/97 ▸ 07/05	96143939	**820262**	87	Y
1.5 i *TF48YE, TF08YE, TF69YE*	E	1498	A15SMS	M			09/97 ▸ 07/05	96143939	**820262**	87	Y
1.6 i 16V *TA086E, TA486E, TA696E*	E	1598	A16DMS	A			09/97 ▸ 09/98	96143939	**820262**	87	Y
1.6 i 16V *TF486E, TF086E, TF696E*	E	1598	A16DMS	M			09/97 ▸ 09/98	96143939	**820262**	87	Y
1.6 i 16V *TF696E, TF486E, TF086E*	E	1598	A16DMS	M			09/98 ▸	96282726	**820535**	88	Y

• **New** Nouveau **Nuevo** Novo **Nuovo** Nieuw **Neu** Yeni Новый Nou

Type Ctr.		cc		AC			OE	Valeo	(°)C	
DAEWOO (.../...)										
Lanos (.../...)										
1.6 i 16V *TA696E, TA086E*	E	1598	A16DMS	A			09/98 ▸	96282726	**820535**	88	Y
Leganza										
2.0 i 16V *AVF69Z*	E	1998	X20SED	M			09/97 ▸	92067408	**820437**	87	Y
2.0 i 16V *AVF69Z*	E	1998	X20SED	A			09/97 ▸ 01/03	92067408	**820437**	87	Y
2.2 i 16V *AVF692*	E	2198	X22SED	M			01/99 ▸	92067408	**820437**	87	Y
2.2 i 16V *AVF692*	E	2198	X22SED	A			01/99 ▸	92067408	**820437**	87	Y
Matiz (98>2000)										
0.8 i *Y4A11*	E	796	F8CV	M		☞7,8	03/98 ▸	94580182	**820438**	82	Y
Matiz (2000>)										
0.8 i *4M12BD*	E	796	F8CV	M		☞7,8	10/00 ▸	94580182	**820438**	82	Y
1.0 i	E	995	B10S	M		☞7,8	10/02 ▸	94580182	**820438**	82	Y
Musso										
2.9 D	D	2874	OM662	M		☞2,5	01/99 ▸	6062030275	**819970**	85	Y
2.9 D	D	2874	OM662	A		☞2,5	01/99 ▸	6062030275	**819970**	85	Y
Nexia										
1.5 16V *TF19V1, TF68V1*	E	1498	A15MF	M			03/95 ▸	03038094	**819935**	92	Y
1.5 16V *TA19V1*	E	1498	A15MF	A			03/95 ▸	03038094	**819935**	92	Y
1.5 *TF08Y1, TF19Y1, TF68Y1*	E	1498	G15MF	M			03/95 ▸ 07/05	96143939	**820262**	87	Y
1.8	E	1796	C18LE	M			09/95 ▸ 08/97	96143939	**820262**	87	Y
Nubira (97>99)										
1.6 i 16V *JA696E, JA486E, JA356E*	E	1598	A16DMS	A			09/97 ▸ 05/99	96143939	**820262**	87	Y
1.6 i 16V *JF356E, JF696E, JF486E*	E	1598	A16DMS	M			09/97 ▸ 05/99	96143939	**820262**	87	Y
2.0 i 8V *JF35WE, JF48WE*	E	1998	X20S	M			09/97 ▸ 05/99	92061279	**820435**	87	Y
2.0 i 16V *JF48ZE, JF35ZE, JF69ZE*	E	1998	DTEC20	M			09/97 ▸ 05/99	92067408	**820437**	87	Y
2.0 i 16V *JA69ZE, JA48ZE, JA35ZE*	E	1998	DTEC20	A			09/97 ▸ 05/99	92067408	**820437**	87	Y
Nubira (99>2003)										
1.6 i 16V *JF486E, JF696E, JF356E*	E	1598	A16DMS	M			06/99 ▸	96282726	**820535**	88	Y
1.6 i 16V *JA486E, JA696E, JA356E*	E	1598	A16DMS	A			06/99 ▸	96282726	**820535**	88	Y
2.0 i *JF69WE, JF48WE*	E	1998	X20NED	M			06/99 ▸	92061279	**820435**	87	Y
2.0 i 16V *JF692E, JF352E, JF482E*	E	1998	X20SED	M			06/99 ▸	92067408	**820437**	87	Y
2.0 i *JA69WE, JA48WE*	E	1998	X20NED	A			06/99 ▸	92061279	**820435**	87	Y
2.0 i 16V *JA352E, JA482E, JA692E*	E	1998	X20SED	A			06/99 ▸	92067408	**820437**	87	Y
Nubira (2003>)										
1.6 i 16V *KLAJF3, KLAJF6*	E	1598	A16DMS	M			07/03 ▸ 07/05	96143939	**820262**	87	Y
1.6 i GPL 16V	F	1598	A16DMS-GPL	M			07/03 ▸ 07/05	96143939	**820262**	87	Y
1.6 i GPL 16V	G	1598	A16DMS-G	M			07/03 ▸	96282726	**820535**	88	Y
1.8 i GPL 16V	G	1799	H18D-G	M			07/03 ▸	96282726	**820535**	88	Y
1.6 i 16V *KLAJF3, KLAJF6*	E	1598	A16DMS	M			07/03 ▸	96282726	**820535**	88	Y
1.8 i 16V *KLAJF3, KLAJF6*	E	1799	H18D	M			07/03 ▸	96282726	**820535**	88	Y
1.8 i 16V *KLAJA3, KLAJA6*	E	1799	H18D	A			07/03 ▸	96282726	**820535**	88	Y
1.8 i 16V *KLAJA6, KLAJA3*	E	1799	H18D	A			07/03 ▸ 07/05	96143939	**820262**	87	Y
1.8 i GPL 16V	F	1799	H18D-GPL	M			07/03 ▸ 07/05	96143939	**820262**	87	Y
Rezzo										
1.6 i GPL 16V	G	1598	A16DMS-G	M			02/02 ▸	92067408	**820437**	87	Y
2.0 i GPL 16V	G	1998	X20SED-G	M			09/00 ▸	92067408	**820437**	87	Y
1.6 i 16V	E	1598	A16DMS	M			02/02 ▸	92067408	**820437**	87	Y
1.8 i *UA75HE*	E	1761	F18S2	A			05/00 ▸ 02/02	96143939	**820262**	87	Y
1.8 i *UF75HE*	E	1761	F18S2	M			04/00 ▸ 02/02	96143939	**820262**	87	Y
2.0 i 16V *UF75ZE*	E	1998	X20SED	M			09/00 ▸	92067408	**820437**	87	Y
2.0 i 16V *UA75ZE, UF75ZE*	E	1998	X20SED	A			09/00 ▸	92067408	**820437**	87	Y
Tacuma										
1.6 i 16V	E	1598	A16DMS	M			02/02 ▸ 07/05	96143939	**820262**	87	Y
1.8 i *UA75HE*	E	1761	F18S2	A			06/00 ▸ 07/05	96143939	**820262**	87	Y
1.8 i *UF75HE*	E	1761	F18S2	M			06/00 ▸ 07/05	96143939	**820262**	87	Y

• **New** Nouveau **Nuevo** Novo **Nuovo** Nieuw **Neu** Yeni Новый Nou

Valeo

Type Ctr.		CC		AC			OE	Valeo	(°)C	
DAEWOO (.../...)										
Tacuma (.../...)										
2.0 i 16V *UF75ZE*	E	1998	X20SED	M			06/00 ▸	92067408	**820437**	87	Y
2.0 i 16V *UA75ZE*	E	1998	X20SED	A			06/00 ▸	92067408	**820437**	87	Y
Tico										
0.8 *CA11*	E	796	H800	M		☞7,8	08/95 ▸	94580182	**820438**	82	Y
DAIHATSU										
Applause (A100) (89>97)										
1.6,1.6 i *A111L, A101L*	E	1589	HD-E, HD-C	M		☞4,9	06/89 ▸ 09/97	9004833055000	**820440**	78	Y
1.6,1.6 i *A101R, A111R, A101L A111L*	E	1589	HD-E, HD-C	M		☞4,9	06/89 ▸ 09/97	9004833056000	**820170**	84	Y
1.6,1.6 i *A101L*	E	1589	HD-E, HD-C	A		☞4,9	06/89 ▸ 09/97	9004833055000	**820440**	78	Y
1.6,1.6 i *A101L, A101R*	E	1589	HD-E, HD-C	A		☞4,9	06/89 ▸ 09/97	9004833056000	**820170**	84	Y
Applause (A101) (97>)										
1.6 i *A101L*	E	1589	HD-E	M		☞4,9	09/97 ▸	9004833056000	**820170**	84	Y
1.6 i *A101L*	E	1589	HD-E	M		☞4,9	09/97 ▸	9004833055000	**820440**	78	Y
1.6 i *A101L*	E	1589	HD-E	A		☞4,9	09/97 ▸	9004833056000	**820170**	84	Y
1.6 i *A101L*	E	1589	HD-E	A		☞4,9	09/97 ▸	9004833055000	**820440**	78	Y
Charade (G10/20) (78>82)										
1.0 *G10LF, G10RG, G10RF, G10LG*	E	993	CB	A			12/80 ▸ 12/82	1634187793000	**820042**	88	Y
1.0 *G10RG, G10LF, G10RF, G10LG, G10RK*	E	993	CB	M			01/78 ▸ 12/82	1634187793000	**820042**	88	Y
Charade (G11/30) (83>86)										
1.0 *G11LF, G11LG, G11RG*	E	993	CB	A			02/83 ▸ 12/86	1634187793000	**820042**	88	Y
1.0,1.0 Turbo *G11LF, G11LG, G11RF G11RG*	E	993	CB,CB50	M			02/83 ▸ 12/86	1634187793000	**820042**	88	Y
1.0 D,1.0 TD *G30LG, G30LF, G30LV G30RG, G30RV*	D	993	CL,CL11	M			07/83 ▸ 12/86	1634187789000	**819944**	82	Y
Charade (G100) (87>93)										
1.0 i *G100L, G100R*	E	993	CB80	M			02/87 ▸ 01/93	9004833041000	**820439**	88	Y
1.0 *G100R, G100L*	E	993	CB23	A			02/87 ▸ 01/93	1634187793000	**820042**	88	Y
1.0,1.0 Turbo,1.0 i *G100R, G100L*	E	993	CB23,CB61,CB90	M			02/87 ▸ 01/93	1634187793000	**820042**	88	Y
1.3,1.3 i *G102L, G112L, G102R G112R*	E	1295	HC-C, HC-E	M		☞4,9	09/88 ▸ 01/93	9004833056000	**820170**	84	Y
1.3,1.3 i *G102L, G102R*	E	1295	HC-E, HC-C	A		☞4,9	09/88 ▸ 01/93	9004833056000	**820170**	84	Y
1.0 D,1.0 TD *G101R, G101L*	D	993	CL11,CL61	M			02/87 ▸ 01/93	1634187789000	**819944**	82	Y
Charade (G200) (93>)										
1.0 *G202L*	E	993	CB23	M			08/93 ▸ 10/95	1634187793000	**820042**	88	Y
1.3 i 16V *G200L, G200R*	E	1295	HC-E	M		☞4,9	03/93 ▸	9004833056000	**820170**	84	Y
1.3 i 16V *G200L, G200R*	E	1295	HC-E	M		☞4,9	03/93 ▸	9004833055000	**820440**	78	Y
1.3 i 16V *G200R, G200L*	E	1295	HC-E	A		☞4,9	03/93 ▸	9004833055000	**820440**	78	Y
1.3 i 16V *G200R, G200L*	E	1295	HC-E	A		☞4,9	03/93 ▸	9004833056000	**820170**	84	Y
1.3 i 16V *G204L*	E	1296	HC-U	M		☞4,9	09/97 ▸	9004833056000	**820170**	84	Y
1.3 i 16V *G204L*	E	1296	HC-U	M		☞4,9	09/97 ▸	9004833055000	**820440**	78	Y
1.5 i 16V *G203R, G203L*	E	1499	HEE	M		☞4,9	06/94 ▸	9004833055000	**820440**	78	Y
1.5 i 16V *G203R, G203L*	E	1499	HEE	M		☞4,9	06/94 ▸	9004833056000	**820170**	84	Y
1.5 i 16V *G203L, G203R*	E	1499	HEE	A		☞4,9	06/94 ▸	9004833056000	**820170**	84	Y
1.5 i 16V *G203R, G203L*	E	1499	HEE	A		☞4,9	06/94 ▸	9004833055000	**820440**	78	Y
1.6 i 16V *G201L, G201R*	E	1589	HD-E	M		☞4,9	03/93 ▸ 05/96	9004833056000	**820170**	84	Y
1.6 i 16V *G201L, G201R*	E	1589	HD-E	M		☞4,9	03/93 ▸ 05/96	9004833055000	**820440**	78	Y
Charmant (A1/2/3) (74>81)										
1.4 *A20*	E	1407	T	M		☞7,8	11/74 ▸ 08/79	9091603040000	**820963**	88	N
Charmant (A3/4/6) (81>87)										
1.3 *A35LE, A35RE*	E	1290	4K-U	M		☞7,8	12/81 ▸ 07/87	9091603040000	**820963**	88	N
1.3 *A35LE, A35RE*	E	1290	4K-U	M		☞8	12/82 ▸ 07/87	9091603055000	**819875**	87	Y
1.6 *A45RE, A45LE*	E	1588	2T	M		☞7,8	10/81 ▸ 08/83	9091603040000	**820963**	88	N

• **New** Nouveau **Nuevo** Novo **Nuovo** Nieuw **Neu** Yeni Новый Nou

Type Ctr.		cc		AC		2 3	OE	Valeo	(°)C	
DAIHATSU (.../...)										
Charmant (A3/4/6) (81>87) (.../...)										
1.6 *A45LE, A45RE*	E	1588	2T	M		☞8	12/82 ▸ 08/83	9091603055000	**819875**	87	Y
1.6 *A60LE, A60RE*	E	1588	4A	M			08/83 ▸ 07/87	9091603046000	**820510**	82	Y
1.6 *A45LE, A45RE*	E	1588	2T	A		☞7,8	10/81 ▸ 08/83	9091603040000	**820963**	88	N
1.6 *A45LE, A45RE*	E	1588	2T	A		☞8	12/82 ▸ 08/83	9091603055000	**819875**	87	Y
1.6 *A60LE, A60RE*	E	1588	4A	A			08/83 ▸ 07/87	9091603046000	**820510**	82	Y
Copen										
1.3 i 16V *L881R, L881L*	E	1298	K3-VE	M			03/06 ▸	9004833088000	**820597**	80	Y
Cuore (L55/60) (80>85)										
550 *L55LF, L55RF, L55LE, L55RE*	E	547	AB	A			12/84 ▸ 08/85	1634187785000	**819842**	80	Y
550 *L55LE, L55RF, L55RE, L55LF*	E	547	AB	M			12/84 ▸ 08/85	1634187785000	**819842**	80	Y
550 *L55RE, L55LE, L55LF*	E	547	AB	M		☞7,8	05/82 ▸ 12/84	1634187780000	**820438**	82	Y
550 *L55RE, L55LE, L55LF*	E	547	AB	A		☞7,8	06/83 ▸ 12/84	1634187780000	**820438**	82	Y
600 *L60RE, L60RF, L60LF, L60LE*	E	659	AD	A			12/84 ▸ 08/85	1634187785000	**819842**	80	Y
600 *L60LF, L60RE, L60RF, L60LE*	E	659	AD	M			12/84 ▸ 08/85	1634187785000	**819842**	80	Y
600 *L60LE, L60LF, L60RE, L60RF*	E	659	AD	M		☞7,8	05/82 ▸ 12/84	1634187780000	**820438**	82	Y
600 *L60RF, L60LF, L60LE*	E	659	AD	A		☞7,8	06/83 ▸ 12/84	1634187780000	**820438**	82	Y
Cuore (L201) (90>94)										
850 *L201L*	E	847	ED-10	M			08/90 ▸ 08/94	1634187283000	**820042**	88	Y
Cuore (L501) (94>98)										
850 *L501L*	E	847	ED-20	A			08/94 ▸ 03/96	1634187583000	**820042**	88	Y
850 *L501L*	E	847	ED-20	M			08/94 ▸ 03/96	1634187583000	**820042**	88	Y
Cuore (L701) (98>)										
1.0 i 12V *L701L, L701R*	E	989	EJ-VE, EJ-DE	M			10/98 ▸	9004833092000	**820933**	84	Y
1.0 i 12V *L701L, L701R*	E	989	EJ-VE, EJ-DE	A			10/98 ▸	9004833092000	**820933**	84	Y
Cuore (04/2003>2005)										
1.0 i 12V *L251L, L251R*	E	989	EJ-VE	M			04/03 ▸ 08/05	9004833092000	**820933**	84	Y
1.0 i 12V *L251R, L251L*	E	989	EJ-VE	A			04/03 ▸ 08/05	9004833092000	**820933**	84	Y
Cuore (L251) (2005>)										
1.0 VVT 12V *L251L, L251R*	E	989	EJ-VE/E4	M			09/05 ▸	9004833092000	**820933**	84	Y
1.0 VVT 12V *L251L, L251R*	E	989	EJ-VE/E4	A			09/05 ▸	9004833092000	**820933**	84	Y
Domino (L55/60) (80>85)										
600 *L60RF, L60LF, L60LE*	E	659	AD	M		☞7,8	05/82 ▸ 12/84	1634187780000	**820438**	82	Y
600 *L60LE, L60LF, L60RF*	E	659	AD	M			12/84 ▸ 08/85	1634187785000	**819842**	80	Y
Domino (L201) (90>94)										
850 *L201*	E	847	ED-10	A			06/90 ▸ 08/94	1634187283000	**820042**	88	Y
850 *L201, L201L*	E	847	ED-10	M			06/90 ▸ 08/94	1634187283000	**820042**	88	Y
Domino (L501) (94>98)										
850 *L501L*	E	847	ED-20	A			08/94 ▸ 03/96	1634187583000	**820042**	88	Y
850 *L501L*	E	847	ED-20	M			08/94 ▸ 03/96	1634187583000	**820042**	88	Y
Domino (L701) (98>)										
1.0 i 12V *L701L*	E	989	EJ-DE	M			10/98 ▸ 06/00	9004833092000	**820933**	84	Y
Feroza										
1.6,1.6 i *F300L, F310L, F310R F300R*	E	1589	HD-C, HD-E	M		☞4,9	10/88 ▸ 12/97	9004833055000	**820440**	78	Y
1.6,1.6 i *F300L, F300R, F310R F310L*	E	1589	HD-E, HD-C	M		☞4,9	10/88 ▸ 12/97	9004833056000	**820170**	84	Y
Fourtrak (85>93)										
2.0	E	1998	3Y	M			10/85 ▸ 06/93	9091603046000	**820510**	82	Y
2.8 D,2.8 TD *F75V*	D	2765	DL51, DL42	M		☞4,8	10/86 ▸	9091603102000	**820442**	82	Y

• **New** Nouveau **Nuevo** Novo **Nuovo** Nieuw **Neu** Yeni Новый Nou

DAIHATSU (.../...)

Fourtrak (93>)												
2.8 D,2.8 TD	*F78RG, F73RG*	D	2765	DL51, DL42	M		☞4,8	03/93 ▸	9091603102000	**820442**	82	Y
Gran Move												
1.5 i	*G303R, G303L*	E	1499	HEE	M		☞4,9	08/96 ▸ 06/98	9004833056000	**820170**	84	Y
1.5 i	*G303L*	E	1499	HEE	M		☞4,9	08/96 ▸ 06/98	9004833055000	**820440**	78	Y
1.5 i	*G303R, G303L*	E	1499	HEE	A		☞4,9	08/96 ▸ 06/98	9004833056000	**820170**	84	Y
1.5 i	*G303L*	E	1499	HEE	A		☞4,9	08/96 ▸ 06/98	9004833055000	**820440**	78	Y
1.6 i 16V	*G301L, G301R*	E	1589	HD-EP	M		☞4,9	06/98 ▸	9004833056000	**820170**	84	Y
1.6 i 16V	*G301L*	E	1589	HD-EP	M		☞4,9	06/98 ▸	9004833055000	**820440**	78	Y
1.6 i 16V	*G301R, G301L*	E	1589	HD-EP	A		☞4,9	06/98 ▸	9004833056000	**820170**	84	Y
1.6 i 16V	*G301L*	E	1589	HD-EP	A		☞4,9	06/98 ▸	9004833055000	**820440**	78	Y
Materia												
1.3 VVT 16V	*M411L, M4*	E	1298	K3-VE	A			09/06 ▸	9004833088000	**820597**	80	Y
1.5 VVT 16V	*M402L, M402R, M412L*	E	1495	3SZ-VE	M			09/06 ▸	9004833088000	**820597**	80	Y
Mira (L201) (92>94)												
850	*L201R*	E	847	ED-10	M			08/92 ▸ 08/94	1634187283000	**820042**	88	Y
Mira (L501) (94>)												
850	*L501R*	E	847	ED-20	M			08/94 ▸ 08/98	1634187583000	**820042**	88	Y
Move (L601) (97>99)												
0.8 i	*L601L, L601R*	E	847	ED-20	A			01/97 ▸ 03/99	1634187208000	**820042**	88	Y
0.8 i	*L601L, L601R*	E	847	ED-20	M			01/97 ▸ 03/99	1634187208000	**820042**	88	Y
Move (L901) (99>)												
1.0 i 12V	*L901L, L901R*	E	989	EJ-DE, EJ-VE	M			04/99 ▸	9004833092000	**820933**	84	Y
1.0 i 12V	*L901L, L901R*	E	989	EJ-DE, EJ-VE	A			04/99 ▸	9004833092000	**820933**	84	Y
Rocky (F7) (84>93)												
2.0	*F85LV, F80LM, F85LM, F80LV, F87LM*	E	1998	3Y	M			04/84 ▸ 08/91	9091603046000	**820510**	82	Y
2.8 D,2.8 TD	*F70LV, F75LV, F77LM F75LM*	D	2765	DL42, DL51	M		☞4,8	04/84 ▸ 04/93	9091603103000	**820443**	88	Y
2.8 D,2.8 TD	*F70LV, F75LV, F77LM F75LM*	D	2765	DL51, DL42	M		☞4,8	04/84 ▸ 04/93	9091603102000	**820442**	82	Y
Rocky (93>)												
2.2	*F98LG*	E	2236	4Y	M		☞4,8	05/93 ▸	9091603103000	**820443**	88	Y
2.2	*F98LG*	E	2236	4Y	M		☞4,8	05/93 ▸	9091603102000	**820442**	82	Y
2.8 TD	*F78LG, F73LG*	D	2765	DL51	M		☞4,8	05/93 ▸	9091603103000	**820443**	88	Y
2.8 TD	*F73LG, F78LG*	D	2765	DL51	M		☞4,8	05/93 ▸	9091603102000	**820442**	82	Y
Sirion												
1.0 i 12V	*M100R, M100L, M110R M110L*	E	989	EJ-DE, EJ-VE	M			04/98 ▸	9004833092000	**820933**	84	Y
1.0 i 12V	*M100R, M110L, M100L M110R*	E	989	EJ-VE, EJ-DE	A			04/98 ▸	9004833092000	**820933**	84	Y
1.3 i 16V	*M111L, M101L, M111R M101R*	E	1298	K3-VE	A			05/00 ▸	9004833088000	**820597**	80	Y
1.3 i 16V	*M101R, M111R, M101L M111L*	E	1298	K3-VE	M			05/00 ▸	9004833088000	**820597**	80	Y
Sirion II												
1.5 i VVT 16V	*M303L, M303R*	E	1495	3SZ-VE	A			06/07 ▸	9004833088000	**820597**	80	Y
1.5 i VVT 16V	*M303R, M303L*	E	1495	3SZ-VE	M			06/07 ▸	9004833088000	**820597**	80	Y
Sportrak (F300)												
1.6,1.6 i	*F300R*	E	1589	HD-C, HD-E	M		☞4,9	03/89 ▸ 12/97	9004833055000	**820440**	78	Y
Terios (97>2000)												
1.3 i	*J100L*	E	1296	HC-EJ	M		☞4,9	03/97 ▸ 05/00	9004833056000	**820170**	84	Y
1.3 i	*J100R*	E	1296	HC-EJ	M		☞4,9	03/97 ▸ 05/00	9004833055000	**820440**	78	Y
1.3 i	*J100L*	E	1296	HC-EJ	A		☞4,9	03/97 ▸ 05/00	9004833056000	**820170**	84	Y

• **New** Nouveau **Nuevo** Novo **Nuovo** Nieuw **Neu** Yeni Новый Nou

Type Ctr.		cc		AC			OE	Valeo	(°)C	
DAIHATSU (.../...)										
Terios (97>2000) (.../...)										
1.3 i *J100R*	E	1296	HC-EJ	A		☞4,9	03/97 ▸ 05/00	9004833055000	**820440**	78	Y
Terios (2000>2006)										
1.3 i 16V *J122R, J122L, J102R J102L*	E	1298	K3-VE	A			05/00 ▸ 04/06	9004833088000	**820597**	80	Y
1.3 i 16V *J102R, J102L, J122R J122L*	E	1298	K3-VE	M			05/00 ▸ 04/06	9004833088000	**820597**	80	Y
Terios (2006>)										
1.3 VVT 16V *J211L*	E	1298	K3-VE	M			05/06 ▸ 11/06	9004833088000	**820597**	80	Y
1.5 VVT 16V *J210L, J210R, J200L*	E	1495	3SZ-VE	A			05/06 ▸	9004833088000	**820597**	80	Y
1.5 VVT 16V *J200R, J210L, J210R J200L*	E	1495	3SZ-VE	M			05/06 ▸	9004833088000	**820597**	80	Y
Trevis L651 (2006>)										
1.0 i *L651R, L651L*	E	989	EJ-VE/E4	M			09/06 ▸	9004833092000	**820933**	84	Y
1.0 i *L651R, L651L*	E	989	EJ-VE/E4	A			09/06 ▸	9004833092000	**820933**	84	Y
Valera (G203)										
1.5 i *G203L*	E	1499	HEE	M		☞4,9	08/94 ▸	9004833056000	**820170**	84	Y
1.5 i *G203L*	E	1499	HEE	A		☞4,9	08/94 ▸	9004833056000	**820170**	84	Y
YRV										
1.0 i 12V *M200L, M200R*	E	989	EJ-VE	M			08/00 ▸	9004833092000	**820933**	84	Y
1.3 i 16V,1.3 i Turbo 16V *M201L, M211L, M201R M211R*	E	1298	K3-VE,K3-VT	A			08/00 ▸ 2007	9004833088000	**820597**	80	Y
1.3 i 16V *M201L, M201R, M211R M211L*	E	1298	K3-VE	M			08/00 ▸ 2007	9004833088000	**820597**	80	Y
DAIHATSU										
Extol										
1.3 i 16V *S221R, S221L*	E	1298	K3-VE	A			06/04 ▸ 11/04	9004833088000	**820597**	80	Y
1.3 i 16V *S221R, S221L*	E	1298	K3-VE	M			06/04 ▸ 11/04	9004833088000	**820597**	80	Y
Hijet (S84) (78>92)										
1000 *S85LV, S85LP, S86LV, S86RP, S86LP S86RV*	E	993	CB	M			07/86 ▸ 03/88	1634187793000	**820042**	88	Y
Hijet (S85) (92>)										
1.0,1.0 i *S85LV, S85LP, S85RP S85RV*	E	993	CB41,CB42	M			12/92 ▸ 05/98	1634187795000	**820042**	88	Y
Taft (F10/20)										
1.6 *F25*	E	1588	12R	M		☞4,8	09/76 ▸ 10/81	9091603083000	**820172**	82	Y
F.S.O. / POLSKI										
125										
1300 *115C*	E	1295	116C000,116C076/56	M			10/72 ▸ 1985	4355846	**819885**	82	Y
Caro										
1.9 D *B01E*	D	1905	XUD9	M			07/92 ▸ 12/99	063337	**819950**	83	Y
F.S.O. / POLSKI										
Truck										
1.9 D *B04E*	D	1905	XUD9A	M			07/92 ▸	063337	**819950**	83	Y
FIAT										
124										
1600	E	1592	132AB.000	M			09/72 ▸ 1975	4440367	**819837**	79	N

• **New** Nouveau **Nuevo** Novo **Nuovo** Nieuw **Neu** Yeni Новый Nou

			Type Ctr.		CC			AC		2 3	OE	Valeo	(°)C
FIAT (.../...)													
124 (.../...)													
1600		E	1608	125BC.000	M				10/69 ▸ 1975	4440367	**819837**	79	N
1800	*124CC4, 124CC1*	E	1756	132C	M				09/72 ▸ 1977	4440367	**819837**	79	N
126													
700	*126/AA43/AB43*	E	704	126A2.000, 126A2.048	M				09/87 ▸ 1996	7696535	**820444**	70	N
127													
900	*127A45*	E	903	127GL.000	M				03/80 ▸ 12/86	4311105	**819886**	87	Y
900	*HACL, HN, 127/A1/A13/A1CL/A4/A44C A45M/AC3/ACL3/AIC/AIIC/AS3*	E	903	127GL.000, 100GL.000	M				10/72 ▸ 12/86	4311105	**819886**	87	Y
1050	*127A2, 127A5, 127A1C3, 127A1CL 127A13, 147AA43*	E	1049	127A.000,127A1.000	M				03/71 ▸ 12/86	4409254	**819885**	82	Y
1300	*127A7*	E	1301	127A3.000	M				07/81 ▸ 12/86	4409254	**819885**	82	Y
1300 D	*127AD, 147AD5C, 147AP 147AD5*	D	1301	127A5.000	M				02/81 ▸ 02/85	4409254	**819885**	82	Y
131													
1300,1300 TC	*131AF, 131AFC, 131AC 131AC2, 131AI2, 131A 131AFI, 131AS, 131A2 131AT, 131AS2, 131AF1*	E	1297	131A.000,131B.000	M				11/74 ▸ 02/81	4440367	**819837**	79	N
1400,1400 TC	*131AIIC, 131AIT*	E	1367	131C1.000	M				03/81 ▸ 1985	4440367	**819837**	79	N
1600,1600 TC	*131A126, 131A1T6, 131A16 131AZ6*	E	1585	131A1.000,131B1.000	A				11/74 ▸ 1985	4440367	**819837**	79	N
1600,1600 TC	*131A1S6, 131A1T6, 131II05 131AF1C, 131A1S, 131A1S5 131A1, 131AF15, 131A1C 131A125, 131A15, 131AF16 131A1S2, 131A, 131AF1S 131A1T, 131AF1, 131A12*	E	1585	131A1.000,131B1.000	M				11/74 ▸ 02/81	4440367	**819837**	79	N
2000	*131A26*	E	1995	154C5.000	A				03/81 ▸ 1985	4440367	**819837**	79	N
2000	*131A, 131A2, 131AK*	E	1995	131C4.000,154C3.046,154C5.000	M				09/78 ▸ 1985	4440367	**819837**	79	N
132													
1600	*132AIII*	E	1585	132C.000	A				04/77 ▸ 08/81	4440367	**819837**	79	N
1600	*132AIII*	E	1585	132C.000	M				04/77 ▸ 08/81	4440367	**819837**	79	N
1600	*132AS6, 132A6, 132AII6, 132AIIS*	E	1592	132A.000,132B.000	A				10/72 ▸ 03/77	4360904	**819837**	79	N
1600	*132AIIS, 132AS5, 132AII, 132AII5 132A5, 132A, 132AS*	E	1592	132A.000,132B.000	M				10/72 ▸ 03/77	4360904	**819837**	79	N
1800	*132A1S6, 132A1II*	E	1756	132A1.000,132B1.000	A				10/72 ▸ 03/77	4360904	**819837**	79	N
1800	*132A1S5, 132A1II, 132A1S*	E	1756	132A1.000,132B1.000	M				10/72 ▸ 03/77	4360904	**819837**	79	N
2000,2000 i	*132A2S6*	E	1995	132C2.000,132DB.2A0	A				04/77 ▸ 08/81	4440367	**819837**	79	N
2000,2000 i	*132A2S5*	E	1995	132C2.000,132DB.2A0	M				04/77 ▸ 08/81	4440367	**819837**	79	N
Nuova 500													
1.4 MPi 16V	*312AXC1*	E	1368	169A3.000	M				07/07 ▸	55202176	**820935**	88	Y
1.3 MJTD 16V	*312AXB1*	D	1248	169A1.000	M				07/07 ▸	55180041	**820563**	88	Y
Argenta													
1600	*132AIV*	E	1585	132D3.000	M				04/81 ▸ 1986	4440367	**819837**	79	N
1800		E	1756	132C1.000	M				04/81 ▸ 05/83	4440367	**819837**	79	N
2000	*132A361, 132A36*	E	1995	132C3.000,132D1.000	A				04/81 ▸ 1986	4440367	**819837**	79	N
2000,2000 i	*132A311, 132A4, 132A3*	E	1995	132C3.000,132D1.000,132E	M				04/81 ▸ 1986	4440367	**819837**	79	N
Albea													
1.2 i,1.2 i 16V	*178/CYA1/CYE1*	E	1242	188A5.000, 188A4.000	M		☞1,4		04/02 ▸	46523118	**819938**	87	Y
1.2 i 16V	*178CYE1*	E	1242	188A5.000	A		☞1,4		04/02 ▸	46523118	**819938**	87	Y
1.6 i 16V	*178CYC1*	E	1596	182B6.000	M				04/02 ▸	46776217	**820454**	88	Y
1.3 JTD 16V	*178CY*	D	1248	188A9.000	M				09/03 ▸	55180041	**820563**	88	Y
Barchetta (95>2003)													
1.8 i 16V	*183/SA1A/SB1A*	E	1747	183A1.000, 188A6.000	M				05/95 ▸	60814382	**820402**	88	Y

• **New** Nouveau **Nuevo** Novo **Nuovo** Nieuw **Neu** Yeni Новый Nou

Type Ctr.		cc		AC		2 3	OE	Valeo	(°)C	
FIAT (.../...)										
Barchetta (2003>)										
1.8 i 16V *183SB1A*	E	1747	188A6.000	M			07/03 ▸	60653946	**820402**	88	Y
Brava										
1.2 i 16V *182/BP1A/BT1A*	E	1242	182B2.000, 188A5.000	M	+/-	☞1,4	10/98 ▸	46523118	**819938**	87	Y
1.4 i 12V *182/BA1A/BG1A*	E	1372	182A5.000, 182A3.000	M	+	☞6	06/95 ▸	7791178	**820447**	88	Y
1.4 i 12V *182/BA1A/BG1A*	E	1372	182A3.000, 182A5.000	M	-		06/95 ▸	46417962	**820452**	88	Y
1.6 i 16V *182BB1A* 4690686 ▸	E	1581	182A4.000	M	+/-		▸ 09/98	46776217	**820454**	88	Y
1.6 i 16V *182B01A*	E	1581	182A4.027	M	+/-		10/98 ▸	46514952	**820156**	75	Y
1.6 i 16V *182/B01A/BB1A/BH1A*	E	1581	182A4.000, 182A4.027 182A6.000	M			06/95 ▸	46776216	**820446**	88	Y
1.6 i 16V *182/BB11/BB1A* 4690686 ▸	E	1581	182A4.000	A	+/-		▸ 09/98	46776217	**820454**	88	Y
1.6 i 16V *182/BB11/BB1A*	E	1581	182A4.000	A			10/96 ▸	46776216	**820446**	88	Y
1.6 i 16V *182BU1A*	E	1596	182B6.000	M			10/98 ▸	46776217	**820454**	88	Y
1.8 i 16V *182BC1A*	E	1747	182A2.000	M	+/-		06/95 ▸	60620386	**820448**	88	Y
1.9 TD *182/B11A/BI1A*	D	1910	182A8.000	M	+/-		03/96 ▸	46514953	**820156**	75	Y
1.9 TD *182/BF/BF1A*	D	1910	182A7.000	M	+/-		03/96 ▸	46432896	**820451**	75	Y
1.9 JTD *182BR1A*	D	1910	182B4.000	M	+/-		10/98 ▸	46546375	**820411**	88	Y
1.9 D *182BE1B*	D	1929	160A7.000	M	+		06/95 ▸ 09/98	46411298	**820453**	82	Y
1.9 D *182BE1B*	D	1929	160A7.000	M	-	☞4	06/95 ▸ 09/98	7625346	**819963**	80	Y
Bravo (95>98)										
1.4 i 12V *182/AA1A/AGIA*	E	1372	182A3.000, 182A5.000	M	+	☞6	06/95 ▸ 09/98	7791178	**820447**	88	Y
1.4 i 12V *182/AA1A/AGIA*	E	1372	182A3.000, 182A5.000	M	-		06/95 ▸ 09/98	46417962	**820452**	88	Y
1.6 i 16V *182/AB1A/ABIA/AHIA*	E	1581	182A4.000, 182A6.000	M			06/95 ▸	46776216	**820446**	88	Y
1.6 i 16V *182/AB1A/ABIA/AHIA*	E	1581	182A4.000, 182A6.000	M			04/98 ▸ 09/98	46776217	**820454**	88	Y
1.6 i 16V *182AB11*	E	1581	182A4.000	A			10/96 ▸	46776216	**820446**	88	Y
1.6 i 16V *182AB11*	E	1581	182A4.000	A			04/98 ▸ 09/98	46776217	**820454**	88	Y
1.8 i 16V *182/AC1A/AC1B*	E	1747	182A2.000	M			06/95 ▸ 09/98	60620386	**820448**	88	Y
2.0 i 20V *182AD1A*	E	1998	182A1.000	M		☞6	06/95 ▸ 09/98	46520785	**820449**	88	Y
1.9 TD *182AI1A*	D	1910	182A8.000	M	+/-		03/96 ▸ 09/98	46514953	**820156**	75	Y
1.9 TD *182AF1A*	D	1910	182A7.000	M			03/96 ▸ 09/98	46432896	**820451**	75	Y
1.9 D *182/AE1A/AE1B*	D	1929	160A7.000	M	+		06/95 ▸ 09/98	46411298	**820453**	82	Y
Bravo (98>2006)										
1.2 i 16V *182/AP1A/AT1A*	E	1242	182B2.000, 188A5.000	M		☞1,4	10/98 ▸	46523118	**819938**	87	Y
1.6 i 16V *182AB1A*	E	1581	182A4.000	M			10/98 ▸	46776216	**820446**	88	Y
1.6 i 16V *182AB1A*	E	1581	182A4.000	M			10/98 ▸	46776217	**820454**	88	Y
1.6 i 16V *182AB11*	E	1581	182A4.000	A			10/98 ▸	46776216	**820446**	88	Y
1.6 i 16V *182AB11*	E	1581	182A4.000	A			10/98 ▸	46776217	**820454**	88	Y
1.6 i 16V *182AU1A*	E	1596	182B6.000	M			10/98 ▸	46776217	**820454**	88	Y
1.8 i 16V *182/AC1A/AC1B*	E	1747	182A2.000	M			10/98 ▸	60620386	**820448**	88	Y
2.0 i 20V *182AQ1A*	E	1998	182B7.000	M		☞6	10/98 ▸	46520785	**820449**	88	Y
1.9 TD *182AI1A*	D	1910	182A8.000	M	+/-		10/98 ▸	46514953	**820156**	75	Y
1.9 JTD *182AV1A*	D	1910	182B9.000	M			10/98 ▸	46795667	**820562**	88	Y
1.9 JTD *182AR1A*	D	1910	182B4.000	M			10/98 ▸	46546375	**820411**	88	Y
1.9 TD *182AF1A*	D	1910	182A7.000	M			10/98 ▸	46432896	**820451**	75	Y
Bravo II (2007>2009)										
1.4 MPi 16V *198AXA1*	E	1368		M			09/20 ▸ 12/09	46523118	**819938**	87	Y
1.9,1.9 MJTD *198/AXB1/AXD1/AXE1*	D	1910		M			09/20 ▸	46790294	**820562**	88	Y
Cinquecento										
700 *170AA43*	E	704	170A.000	M			01/92 ▸ 02/98	7722107	**820160**	87	Y
700 i *170AD43*	E	704	170A.046	M			01/92 ▸ 02/98	7759596	**820539**	87	Y
900 i *170/AF53/BF53/CF53/CF5C*	E	899	1170A1.046F, 1170A1.046	M		☞4	01/92 ▸ 02/98	7729959	**820162**	87	Y
900 *170AG53*	E	899	1170A1.000	M			07/93 ▸ 02/98	7729960	**820163**	87	Y
900 i *170AC53*	E	903	170A1.046	M		☞4	01/92 ▸ 02/98	7729959	**820162**	87	Y
900 *170AB53*	E	903	170A1.000	M			06/92 ▸ 06/93	7729960	**820163**	87	Y
1.1 i *170AH53*	E	1108	176B2.000	M		☞1,4	10/94 ▸ 02/98	7589135	**819938**	87	Y
coupé										
1.8 i 16V *175AXA1*	E	1747	183A1.000	M			11/93 ▸	60812410	**820401**	83	Y

• **New** Nouveau **Nuevo** Novo **Nuovo** Nieuw **Neu** Yeni Новый Nou

			Type Ctr.		CC			AC		2 3	OE	Valeo	(°)C
FIAT (.../...)													
coupé (.../...)													
1.8 i 16V	*175AXA1*	E		1747	183A1.000	M			06/98 ▸	60814382	**820402**	88	Y
2.0 i 20V	*175/AXC1/AXE1*	E		1998	182A1.000, 182B3.000	M		☞6	07/96 ▸	46520785	**820449**	88	Y
2.0 i Turbo 20V	*175AXD1*	E		1998	175A3.000	M			10/98 ▸	46432157	**820978**	88	Y
Croma													
2.0 CHT,2.0 ie 2.0 ie Turbo,2000 ie	*155PF55, 15AG55A, 154 AC55/AD55/AG55/AM/AQ55 AU55/DG55/LB55/LC55/LD55 LE55/LF55/LM55/ME55/NC55 NE55/NF55*	E		1995	154A1.000, 154C4.000 154C3.000, 154A2.000, 154C 154A2.046, 834B.000 834B.146, 154C5.000 154C4.046, 154C3.046	M		☞8	10/85 ▸ 08/96	7656567	**819882**	81	Y
2.0 CHT,2.0 ie,2000 ie	*154/AD35/AQ35/AQ45/LB45 LC45/LD45/LM45*	E		1995	834B.000, 834B.146, 154C3.046 154C5.000, 154C3.000	A		☞8	10/85 ▸ 08/96	7656567	**819882**	81	Y
2.0 TDiD	*154LR55*	D		1929	154D1.000	M			11/92 ▸ 12/96	7718184	**820457**	82	Y
Croma II (2005>)													
1.9 JTD 1.9 JTD Multijet 16V	*194/AXB1/AXC1/BXB1*	D		1910	939A2.000, 939A1.000	M			06/05 ▸	55202510	**820965**	88	Y
1.9 JTD Multijet 16V	*194AXC1*	D		1910	939A2.000	A			06/05 ▸	55202510	**820965**	88	Y
2.4 JTD Multijet 20V	*194AXD1*	D		2387	939A3.000/F	A			06/05 ▸	55194768	**820578**	88	Y
Grande Punto													
1.2 i 8V	*199/AXA1/BXA1*	E		1242	199A4.000	M			10/05 ▸	55202176	**820935**	88	Y
1.2 i 8V	*199/AXA1/BXA1*	E		1242	199A4.000	M			10/05 ▸	7589135	**819938**	87	Y
1.4 MPi 16V,1.4 MPi 8V 1.4 i 8V	*199/AXB1/AXG1/BXB1/BXG1 DXB1*	E		1368	350A1.000, 199A6.000	M			10/05 ▸	55202176	**820935**	88	Y
1.3 MJTD 16V	*199/AXC1/AXD1/BXC1/BXD1 DXC1*	D		1248	199A2.000, 199A3.000	M			10/05 ▸	55194271	**820934**	88	Y
1.9 JTD	*199/AXE1/BXE1*	D		1910	939A1.000, 199A5.000	M			10/05 ▸	55202510	**820965**	88	Y
Idea (2003>2007)													
1.2 i 16V	*350AXD1*	E		1242	188A5.000	M		☞1,4	02/04 ▸	46523118	**819938**	87	Y
1.4 i 16V	*350/AXA1/AXE1*	E		1368	843A1.000, 192B2.000	M		☞1,4	10/03 ▸	46523118	**819938**	87	Y
1.4 i	*350AXF1*	E		1368	350A1.000	M			10/03 ▸	55202176	**820935**	88	Y
1.3 JTD Multijet 16V	*350AXG1*	D		1248	199A3.000	M			10/03 ▸	55194271	**820934**	88	Y
1.3 JTD Multijet 16V	*350AXB1*	D		1248	188A9.000	M			10/03 ▸ 06/07	55180041	**820563**	88	Y
1.9 JTD	*350AXC1*	D		1910	188B2.000	M		☞6	02/04 ▸	55190049	**820588**	88	Y
1.9 JTD	*350AXC1*	D		1910	188B2.000	M			02/04 ▸	55186478	**820577**	88	Y
Idea (2007>)													
1.2 i 16V	*350AXD1*	E		1242	188A5.000	M			06/07 ▸	46523118	**819938**	87	Y
1.4 i 16V	*350/AXA1/AXE1/BXA1*	E		1368	192B2.000,843A1.000	M			06/07 ▸	46523118	**819938**	87	Y
1.4 i 8V	*350AXF1*	E		1368	350A1.000	M			06/07 ▸	55202176	**820935**	88	Y
1.3 MJTD 16V	*350/AXG1/BXG1*	D		1248	199A3.000	M			06/07 ▸	55194271	**820934**	88	Y
1.9 JTD	*350/AXE1/BXE1*	D		1910	188B2.000	M			06/07 ▸	55186478	**820577**	88	Y
Linea (2007>)													
1.4 i	*323AXA1*	E		1368	350A1.000	M			07/07 ▸	55202176	**820935**	88	Y
1.3 MJTD 16V	*323AXB1*	D		1248	199A3.000	M			07/07 ▸	55194271	**820934**	88	Y
Marea													
1.2 i 16V	*185/AXP1/BXP1*	E		1242	182B2.000	M	+/-	☞1,4	02/99 ▸	46523118	**819938**	87	Y
1.4 i 12V	*185/AXA/BXA*	E		1372	182A3.000	M	+	☞6	07/96 ▸ 01/99	7791178	**820447**	88	Y
1.4 i 12V	*185/AXA/BXA*	E		1372	182A3.000	M	-		07/96 ▸ 01/99	46417962	**820452**	88	Y
1.6 i 16V	*185BXB1*	E		1581	182A4.000	M	+/-		02/99 ▸	46514952	**820156**	75	Y
1.6 i 16V 1.6 i Bipower 16V 5054800 ▸	*185/AXB/AXB1/AXH/AXH1/BXB BXB1*	E		1581	185A3.000, 182A4.000	M			▸ 01/99	46776217	**820454**	88	Y
1.6 i 16V 0176690 ▸	*185/AXB/AXB1/BXB/BXB1*	E		1581	182A4.000	A	+/-		▸ 01/99	46776217	**820454**	88	Y
1.6 i 16V	*185/AXB/BXB*	E		1581	182A4.000	A	+/-		09/96 ▸ 01/99	46776216	**820446**	88	Y
1.6 i 16V	*185BXB1*	E		1581	182A4.000	A	+/-		02/99 ▸	46514952	**820156**	75	Y
1.6 i 16V 1.6 i Bipower 16V ▸ 176690	*185/AXB/AXH/AXH1/AXL1/BXB*	E		1581	182B5.098, 185A3.000 182A4.000	M	- +/-		07/96 ▸	46776216	**820446**	88	Y

• **New** Nouveau **Nuevo** Novo **Nuovo** Nieuw **Neu** Yeni Новый Nou

			Type Ctr.		cc			AC			OE	Valeo	(°)C
FIAT (.../...)													
Marea (.../...)													
1.6 i 16V	*185/AXR1/BXR1*	E		1596	182B6.000	M			02/99 ▸	46776217	**820454**	88	Y
1.6 i 16V	*185/AXR1/BXR1*	E		1596	182B6.000	A			02/99 ▸	46776217	**820454**	88	Y
1.8 i 16V	*185/AXC/AXC1/BXC/BXC1*	E		1747	182A2.000	M	+/-		07/96 ▸	60620386	**820448**	88	Y
2.0 i 20V	*185/AXD/AXM1/AXS1/BXD BXM1/BXS1*	E		1998	185A8.000, 182B7.000 182A1.000	M		☞6	07/96 ▸	46520785	**820449**	88	Y
1.9 TD	*185/AXE/BXE*	D		1910	182A7.000	M	+/-		07/96 ▸ 01/99	46432896	**820451**	75	Y
1.9 TD	*185/AXF/AXF1/BXF/BXF1*	D		1910	182A8.000	M	+/-		10/98 ▸	46514953	**820156**	75	Y
1.9 JTD	*185/AXN1/BXN1*	D		1910	182B4.000	M	+/-		02/99 ▸	46546375	**820411**	88	Y
1.9 TD	*185/AXF/BXF*	D		1910	182A8.000	M	+		07/96 ▸ 09/98	46518601	**820158**	75	N
1.9 TD	*185/AXF/BXF*	D		1910	182A8.000	M	-	☞1	07/96 ▸ 01/99	46518600	**820157**	75	N
1.9 JTD	*185/AXT1/BXT1/BXU1*	D		1910	186A6.000, 182B9.000	M			02/99 ▸	46795667	**820562**	88	Y
2.4 JTD	*185/AXQ1/BXQ1*	D		2387	185A6.000	M			02/99 ▸ 09/02	46559840	●**820837**	88	Y
Marengo (159) (89>93)													
1.9 D	*159AG*	D		1929	160A7.000	M		☞4	11/89 ▸ 02/93	7625346	**819963**	80	Y
1.9 Tds	*159AI*	D		1929	160A6.000	M		☞4	11/89 ▸ 02/93	7614475	**819964**	80	Y
Marengo (159) (93>95)													
1.9 D	*159AG*	D		1929	160A7.000	M		☞4	02/93 ▸ 01/95	7625346	**819963**	80	Y
1.9 TD	*159BI*	D		1929	160A6.000	M		☞4	02/93 ▸ 01/95	7614475	**819964**	80	Y
Marengo (185) (95>)													
1.9 JTD,1.9 TD	*185/CXE/CXN1*	D		1910	182A7.000, 182B4.000	M	+/-		05/98 ▸	46432896	**820451**	75	Y
1.9 TD	*185/CXF/CXF1*	D		1910	182A8.000	M	+		01/95 ▸	46518601	**820158**	75	N
1.9 TD	*185/CXF/CXF1*	D		1910	182A8.000	M	-	☞1	01/95 ▸	46518600	**820157**	75	N
1.9 JTD	*185CXT1*	D		1910	186A6.000	M			01/99 ▸	46795667	**820562**	88	Y
1.9 JTD	*185CXN1*	D		1910	182B4.000	M			01/99 ▸	46546375	**820411**	88	Y
Multipla (98>2003)													
1.6 i 16V 1.6 i Bipower 16V 1.6 i Blupower 16V	*186/AMA1/AMB1/AXA1*	E		1581	186A4.000, 186A3.000 182A4.000	M			11/98 ▸	46776217	**820454**	88	Y
1.6 i 16V 1.6 i Bipower 16V	*186/AGB1/AXC1*	E		1596	182B6.000	M			11/98 ▸	46776217	**820454**	88	Y
1.9 JTD	*186AXB1*	D		1910	182B4.000	M			11/98 ▸	46546375	**820411**	88	Y
1.9 JTD	*186/AXD1/AXE1*	D		1910	186A6.000, 186A8.000	M			11/98 ▸	46790296	**820562**	88	Y
Multipla (2004>)													
1.6 i 16V 1.6 i Bi Power 16V 1.6 i Bi Power GPL 16V	*186/AGB1/AXC1*	E		1596	182B6.000	M			07/04 ▸	46776217	**820454**	88	Y
1.9 JTD	*186AXE1*	D		1910	186A8.000	M			07/04 ▸	46790296	**820562**	88	Y
Palio													
1.1	*178BXM1*	E		1108	178B9.033	M		☞1,4	09/98 ▸ 02/01	7589135	**819938**	87	Y
1.2 i,1.2 i 16V	*178/AXU1/BXS1/BXU1/BYA1 BYE1/DXG1/DYA/DYA1/DYE DYE1*	E		1242	188A5.000, 188A4.000 178D7055, 178C4.066 178B7.045, 178B5.000	M	- +/-	☞1,4	03/01 ▸	46523118	**819938**	87	Y
1.4 i	*178/BXC1/BXP1*	E		1372	178B2.016, 178B2.000	M		☞1	06/99 ▸ 02/01	7778655	**820433**	87	Y
1.6 i	*178/AXV1/DXV1*	E		1580	178D2.011	M	+/-		06/99 ▸ 02/01	46776217	**820454**	88	Y
1.6 i	*178/AXV1/DXV1*	E		1580	178D2.011	M			06/99 ▸	46776216	**820446**	88	Y
1.6 i 16V	*178/BXD1/DXD1*	E		1581	178B3.000	M			06/99 ▸ 02/01	46776217	**820454**	88	Y
1.6 i 16V	*178/BXD1/DXD1*	E		1581	178B3.000	M			09/97 ▸ 02/01	46776216	**820446**	88	Y
1.6 i 16V	*178/BYC1/DYC/DYC1*	E		1596	182B6.000, 178E7.000	M			03/01 ▸	46776217	**820454**	88	Y
1.6 i 16V	*178DYC1*	E		1596	182B6.000	M			09/97 ▸ 02/01	46776216	**820446**	88	Y
1.7 TD	*178/DXB1/DXH1*	D		1697	176B7.000, 176A3.000	M	+/-	☞2	09/97 ▸ 02/01	7770236	**820463**	80	Y
1.7 TD	*178DXH1*	D		1697	176A3.000	M	-	☞2	09/97 ▸ 02/01	7721399	**820462**	80	Y
1.7 D	*178BXN1*	D		1697	176B3.000	M		☞2	09/98 ▸ 02/01	7794132	**820464**	80	Y
1.9 D	*178DYD1*	D		1910	223A6.000	M	+	☞6	09/97 ▸ 02/01	46800798	**820586**	88	Y
Panda													
0.6	*141A*	E		652	126B.B1C0	M			07/80 ▸ 1986	4317492	**819886**	87	Y
750	*11A/14AC/A4AC/A4CT, 141/AA43/AA4C AA53/AI43/AI53/AM43/AM53*	E		769	156A4.000, 156A4.048 141B.000	M		☞1,4	03/86 ▸	7589135	**819938**	87	Y

• **New** Nouveau **Nuevo** Novo **Nuovo** Nieuw **Neu** Yeni Новый Nou

Valeo

		Type Ctr.		cc		AC		2-3	OE	Valeo	(°)C	
FIAT (.../...)												
Panda (.../...)												
0.8	*141/A2N/A2NC*	E		843	100GL6.000	M			01/82 ▸ 1986	4317492	**819886**	87	Y
900 ie	*141/GT53/GT5F*	E		899	1170A1.046F	M		☞1,4	04/92 ▸	7589135	**819938**	87	Y
0.9	*141/A11/A3/A35/A3I*	E		903	100GL3.000	M			07/80 ▸ 02/86	4317492	**819886**	87	Y
900	*141AL53*	E		903	146A.048	M		☞1,4	04/91 ▸ 03/92	7589135	**819938**	87	Y
1.0	*141/A4/A4C*	E		965	A112B1.054	M			06/83 ▸ 1986	4311105	**819886**	87	Y
1000,1000 ie	*11A/B5AC/B5CT/B8AC/B8CT E5B8, 151AE53, 141/AB43 AB53/AB83/AE53/AE5B/AF43 AF53/AJ53/AO43/AO53*	E		999	156A2.246, 156A2.000 156A3.000, 156A2.100 141C2.000	M		☞1,4	03/86 ▸	7589135	**819938**	87	Y
1000	*141AB13*	E		999	156A2.000	A		☞1,4	1990 ▸	7589135	**819938**	87	Y
1100 ie	*141/AK53/AS53/AW53/MK53*	E		1108	156C.046, 176B2.000 187A1.000	M		☞1,4	06/89 ▸	7589135	**819938**	87	Y
1100 ie	*141/AK13/AS13*	E		1108	176B2.000, 156C.046	A		☞1,4	10/90 ▸	7589135	**819938**	87	Y
1300 D	*141/AD53/AD5C*	D		1301	156A5.000	M		☞1,4	04/86 ▸	7589135	**819938**	87	Y
Panda (2003>)												
1.1 i	*169/AXA1/CXA1*	E		1108	187A1.000	M		☞1,4	09/03 ▸	7589135	**819938**	87	Y
1.2 i	*169/AXB1/AXB2/CXB1*	E		1242	188A4.000	M		☞1,4	09/03 ▸	7589135	**819938**	87	Y
1.3 MJTD 16V	*169AXD1*	D		1248	169A1.000	M			06/07 ▸ 09/09	55180041	**820563**	88	Y
Punto (93>99)												
55 ED,55 EL,55 EL 6 speed 55 S,55 SX,55 SX 6 speed	*176/AA53/AA55/AA5C/AA63 AH53/AQ/AO53/AO55/AQ63*	E		1108	176A6.000, 176B2.000	M		☞1,4	07/93 ▸ 09/99	7789135	**819938**	87	Y
55 S	*176AH53*	E		1108	176A6.000	M		☞1	07/93 ▸ 07/94	7725918	**820466**	82	Y
60 Opera,60 S,60 SX 60 Star,75 ELX,75 HSD 75 SX,85 ELX,85 Sporting	*176/AB52/AC53/AC55/AR53 AR55/AR5F/AV52/AV53/AV55 BB52/BB53/BB55/BB5F/BR52 BV53*	E		1242	176A8.000, 176B9.000 176B4.000, 176A7.000	M	+/-	☞1,4	07/93 ▸ 09/99	7789135	**819938**	87	Y
60 ELX,60 SX	*176/AP13/AP15/AR12/AR13 AR15*	E		1242	176B1.000, 176B4.000	A		☞1,4	05/94 ▸ 09/99	7789135	**819938**	87	Y
GT	*176/AD53/AS53*	E		1372	176B6.000, 176A4.000	M		☞1	07/93 ▸ 09/99	7725918	**820466**	82	Y
90 ELX,ELX	*176/AL52/BL52/BL53/BL55*	E		1581	176A9.000	M	+	☞1,4	11/93 ▸ 04/97	7789135	**819938**	87	Y
90 ELX,ELX	*176/AL52/BL52/BL53/BL55*	E		1581	176A9.000	M	-	☞1	11/93 ▸ 04/97	7778655	**820433**	87	Y
60 Diva,60 S,60 SX,70 ELX 70 SX,ELX,S,SX	*176/AF/AF53/AF55/AF5C AF5F/AT/AT53/AT55/CG/CG53 CG55*	D		1697	176B7.000, 176A5.000 176A3.000F	M	+/-	☞2	07/93 ▸	7770416	**820465**	80	Y
60 Diva,60 S,60 SX,70 ELX 70 SX,ELX,S,SX	*176/AF/AF53/AF55/AF5C AF5F/AT/AT53/AT55/CG/CG53 CG55*	D		1697	176B7.000, 176A3.000F 176A5.000	M	+/-	☞2	07/93 ▸	7741883	**820067**	80	Y
S	*176/AI53/AI55*	D		1697	176B3.000	M	+/-	☞2	10/94 ▸ 04/97	7794132	**820464**	80	Y
60 Diva,60 S,60 SX,70 ELX 70 SX,ELX,S,SX	*176/AG53/AT/AT53/AT55/CG CG53/CG55*	D		1697	176B7.000, 176A3.000 176A3.000F	M	+	☞2	07/93 ▸ 09/99	7770236	**820463**	80	Y
S,SX	*176AG53*	D		1697	176A3.000	M	-	☞2	07/93 ▸	7721399	**820462**	80	Y
60 Diva,60 S,60 SX,70 ELX 70 SX,ELX,S,SX	*176CG55, 176AT53, 176AG53 176AT55, 176CG, 176CG53 176AT*	D		1697	176A3.000,176A3.000F 176B7.000	M			06/95 ▸ 09/99	46459502	●**820797**	80	Y
Punto II (99>2003)												
1.2 i,1.2 i 16V	*188/AX/AXA1/AXB1/BX/BXA1 BXB1*	E		1242	188A4.000, 188A5.000	M		☞1,4	07/99 ▸	46523118	**819938**	87	Y
1.2 i 16V	*188/AX/AXB1/BXB1*	E		1242	188A5.000	A		☞1,4	07/99 ▸	46523118	**819938**	87	Y
1.8 i 16V	*188/AX/AXF1/BXF1*	E		1747	188A6.000, 183A1.000	M			07/99 ▸	60814382	**820402**	88	Y
1.9 D	*188/AX/AXD1/BXD1*	D		1910	188A3.000	M		☞6	07/99 ▸ 06/03	46758434	●**820467**	88	Y
1.9 JTD	*188AX, 188BXE1, 188AXG1 188AXE1, 188BX*	D		1910	188A2.000,188A7.000	M			07/99 ▸ 06/03	46758586	●**820468**	88	Y
Punto II (2003>)												
1.2 i,1.2 i 16V 1.2 i Bipower	*188/AXA1/AXB1/BXA1/BXB1*	E		1242	188A5.000, 188A4.000	M		☞1,4	07/03 ▸	46523118	**819938**	87	Y
1.4 i 16V	*188/AXM1/BXM1*	E		1368	843A1.000	M		☞1,4	07/03 ▸	46523118	**819938**	87	Y
1.8 i 16V	*188AXF1*	E		1747	188A6.000	M			07/03 ▸	60814382	**820402**	88	Y
1.3 JTD 16V	*188AXH1, 188CXH1, 188BXH1*	D		1248	188A9.000	M			07/03 ▸ 08/09	55180041	**820563**	88	Y
1.9 JTD	*188/AXL1/BXL1*	D		1910	188B2.000	M		☞6	07/03 ▸	55190049	**820588**	88	Y

• **New** Nouveau **Nuevo** Novo **Nuovo** Nieuw **Neu** Yeni Новый Nou

Type Ctr.		cc		AC		2 3	OE	Valeo	(°)C	
FIAT (.../...)										
Punto II (2003>) (.../...)										
1.9 JTD *188AXG1, 188BXG1*	D	1910	188A7.000	M			07/03 ▸	46758586	●820468	88	Y
Punto Evo (2009>)										
1.4 i GPL	G	1368	1.4-8V-GPL/E4	M			10/09 ▸	55202176	820935	88	Y
1.4 i Bipower	F	1368	1.4-8VMETANO/E5	M			10/09 ▸	55202176	820935	88	Y
1.2 i 65 *199/AXA1/BXA1*	E	1242	199A4.000	M			10/09 ▸	55202176	820935	88	Y
1.4 i 77 *199/AXB1/BXB1*	E	1368	350A1.000	M			10/09 ▸	55202176	820935	88	Y
Regata										
70ES *138AB54*	G	1301	138B2.000-G	M		☞4	1985 ▸ 11/85	5954579	819939	85	Y
60 *138A*	E	1116	146A4.000	M		☞4	07/86 ▸ 1990	7671375	819940	85	Y
70S *138A934*	E	1299	149C4.028	A		☞4	07/86 ▸ 02/88	7671375	819940	85	Y
70,70ES,70S *138/AA44/AA54/AA55/AB54 AI54/AX44/AX54*	E	1301	138B2.000, 149A7.000	M		☞4	09/83 ▸ 06/86	5954579	819939	85	Y
70,70S *138/AX54/AX55*	E	1301	149A7.000	M		☞4	07/86 ▸	7671375	819940	85	Y
75,75S,75ie,85S *138/A/AC54*	E	1498	138C3.048, 138C2.048 138B3.000	M		☞4	09/83 ▸ 1990	7671375	819940	85	Y
75Sie,75ie *138A*	E	1498	138C2.048	M		☞1,4	07/86 ▸ 1990	7589454	820474	87	Y
75S,85,85S *138/A/AC34/AC64/AU34*	E	1498	138B3.000, 138C3.048 149A5.000	A		☞4	09/83 ▸ 1990	7671375	819940	85	Y
85S *138/AD54/AD55/AR54*	E	1585	149A.000	M		☞4	09/83 ▸ 06/86	7671375	819940	85	Y
100 Sie,100S,100Sie,85S *138/A754/A755/AE54/AR55*	E	1585	149A4.000, 149A.000 149C3.000	M			09/84 ▸	7615235	819896	88	Y
85S *138AU54*	E	1585	149A.000	M		☞4	07/86 ▸ 1990	7574911	819940	85	Y
- *138/AJ54/AJ55*	D	1697	149B3.000	M		☞4	09/84 ▸ 06/86	7625346	819963	80	Y
Super *138/AG54/AG55*	D	1929	149A1.000	M		☞4	09/83 ▸ 06/86	7625346	819963	80	Y
- *138/AZ54/AZ55*	D	1929	831D1.000	M		☞4	09/86 ▸ 1990	7580642	820472	80	Y
Ritmo (78>82)										
60 L *138AC*	E	1049	127A6.000	M			02/80 ▸ 10/82	4409254	819885	82	Y
65 CL,65 L *138/A1/A13/A135/A15/A1C A1C3/A1C5* 4454948 ▸	E	1301	138A1.000	M		☞4	05/78 ▸ 10/82	5954579	819939	85	Y
65 CL,65 L *138/A1/A13/A135/A15/A1C A1C3/A1C5*	E	1301	138A1.000	M		☞4	05/78 ▸ 10/82	7671375	819940	85	Y
75 CL,75 L *138/A2/A23/A2C/A2C3*	E	1498	138A2.000	M		☞4	05/78 ▸ 10/82	7671375	819940	85	Y
75 CL,75 L *138/A236/A26/A2C3/A2C6*	E	1498	138A2.000	A		☞4	05/78 ▸ 10/82	7671375	819940	85	Y
105 TC *138A2SP*	E	1585	138AR.000	M			03/82 ▸ 10/82	4440367	819837	79	N
125 TC,2000 TC Abarth	E	1995	154C5.000,FIAT03	M			10/81 ▸ 10/82	4360904	819837	79	N
Ritmo (83>88)										
60 *138A434*	E	1049	127A6.000	M			11/82 ▸ 03/85	4409254	819885	82	Y
60 CL,60 ES,60 L *138/A434/A44/A4E*	E	1116	138B.000, 138B1.000	M		☞4	11/82 ▸ 03/85	5954579	819939	85	Y
60 CL,60 ES *138/A4F3/A4F4/A4IE/A4II*	E	1116	138C1.000, 146A4.000	M		☞4	04/85 ▸ 1988	7671375	819940	85	Y
70 CL *138/A52/A532*	E	1299	138B3.028	A		☞4	04/85 ▸ 1988	7671375	819940	85	Y
70,70 CL *138/A5/A53/A56C*	E	1301	138B2.000	M		☞4	11/82 ▸ 1987	5954579	819939	85	Y
70 CL *138A5II*	E	1301	149A7.003	M		☞4	04/85 ▸ 1988	7671375	819940	85	Y
70 CL *138A56*	E	1301	138B2.000	A		☞4	11/82 ▸ 03/85	5954579	819939	85	Y
85,85 S *138/A7/A73/A71/A713*	E	1498	149A5.000, 138B3.000	M		☞4	11/82 ▸ 1988	7671375	819940	85	Y
85,85 S *138/A72/A732/A76*	E	1498	138B3.000	A		☞4	11/82 ▸ 1988	7671375	819940	85	Y
100 S *138A8II*	E	1585	149A4.048	M		☞8	04/85 ▸ 1988	7656567	819882	81	Y
105 TC *138A8*	E	1585	138AR.000	M			11/82 ▸ 03/85	4440367	819837	79	N
130 TC *138A9A*	E	1995	FIAT04	M			11/82 ▸ 03/85	4360904	819837	79	N
DS *138A6DT*	D	1929	831D1.000	M			02/86 ▸ 1988	7580642	820472	80	Y
Sedici										
1.9 JTD Multijet *189215*	D	1910	D19AA	M			04/06 ▸	55202510	820965	88	Y
Seicento										
0.9 i *187/AXA/AXA1*	E	899	1170A1.046, 1170A1.046F	M		☞4	03/98 ▸	7729959	820162	87	Y
0.9 i *187AXA1*	E	899	1170A1.046F	A		☞4	03/98 ▸	7729959	820162	87	Y
1.1 i *187/AXB1/AXC1/CXC1*	E	1108	176B2.000, 187A1.000	M		☞1,4	03/98 ▸	7589135	819938	87	Y
Siena (97>2001)										
1.2 i *178/CXG1/CXS1/CXU1*	E	1242	178B5.000, 178C4.066 178B7.045	M	+/-	☞1,4	09/98 ▸	7589135	819938	87	Y

• **New** Nouveau **Nuevo** Novo **Nuovo** Nieuw **Neu** Yeni Новый Nou

Type Ctr.		cc		AC			OE	Valeo	(°)C	
FIAT (.../...)										
Tempra (.../...)										
1.8 ie,1.8 ie 16V *159/AM54/AM55/AM5C/AN54 AN55/AV54/AV55/AZ54/BV54 BV55/BY54/BY55*	E	1756	159A4.046, 159A4.000 836A5.000, 835C2.000 835C4.000	M			11/89 ▸	7615235	**819896**	88	Y
2.0 ie *159AP55* 8742134 ▸	E	1995	159A6.046	M		☞1,4	▸ 02/93	7723325	**820150**	87	Y
2.0 ie *159/AP54/AP55*	E	1995	159A6.046	M			11/89 ▸ 1996	7615235	**819896**	88	Y
2.0 ie *159/AP14/AP44*	E	1995	159A6.046	A			02/90 ▸ 1996	7615235	**819896**	88	Y
2.0 ie *159AP55* ▸ 8742134	E	1995	159A6.046	M		☞1,4	02/90 ▸	7581201	**819960**	87	Y
1.9 TD *159/AQ54/AQ55*	D	1929	160D1.000	M	+	☞2	03/93 ▸	7727042	**820403**	80	Y
1.9 TD,1.9 TDs *159/AI54/AI55/AI5C/BI54 BI55*	D	1929	160A6.000	M		☞4	11/89 ▸	7614475	**819964**	80	Y
1.9 D *159/AG54/AG55/AG5C*	D	1929	160A7.000	M		☞4	11/89 ▸	7625346	**819963**	80	Y
1.9 TDs *159/AQ54/AQ55*	D	1929	160B6.046	M		☞4	04/90 ▸ 02/93	7634348	**820159**	80	Y
1.9 TD *159/AQ54/AQ55*	D	1929	160D1.000	M		☞2	03/93 ▸	7730098	**820066**	80	Y
Tipo										
1.1 *160/AA45/AA55*	E	1108	160A3.000	M		☞1,4	01/88 ▸ 02/93	7589135	**819938**	87	Y
1.4,1.4 ie *160/AB55/AB5C/AD53/AD55 AU53/AU55/AU5C/EA53/EA55 EP53/EP55/EP5C*	E	1372	160A1.046, 160A1.000 159A2.000, 836A4.000	M		☞1,4	01/88 ▸ 10/95	7723325	**820150**	87	Y
1.4 *160AU15*	E	1372	160A1.000	A		☞1,4	04/90 ▸ 02/93	7723325	**820150**	87	Y
1.6,1.6 ie *160/AE55/AE5C/AF55/AZ55 AZ5C/B1/BZ55/EB53/EB55 FB55*	E	1581	160A2.000, 835C1.000 159A3.000, 160A2.	M		☞1,4	01/88 ▸ 1995	7723325	**820150**	87	Y
1.6,1.6 ie *160/A1/AZ15/EC15*	E	1581	159A3.048, 160A2.000	A		☞1,4	01/88 ▸ 1994	7723325	**820150**	87	Y
1.6 2ACT *160AP55*	E	1585	1602.ACT	M			07/88 ▸ 1993	7615235	**819896**	88	Y
1.8 ie *160/AM55/AY55/CD53/ED53 ED55*	E	1756	159A4.046, 835C2.000 159A4.000	M			04/89 ▸ 1995	7615235	**819896**	88	Y
2.0 ie,2.0 ie 16V *160/AJ/AJ55/AT/EF53/EF55*	E	1995	159A6.046, 159A5.046 836A3.000, 154E1.000	M			06/90 ▸ 1995	7615235	**819896**	88	Y
2.0 ie *160/AJ/AJ54/AT*	E	1995	159A6.046, 159A5.046	A			06/90 ▸ 1995	7615235	**819896**	88	Y
1.7 D *160/AG55/AG5C*	D	1697	149B4.000	M		☞4	01/88 ▸ 02/93	7625346	**819963**	80	Y
1.7 D *160/EG53/EG55/EG5C*	D	1697	149B4.000	M		☞4	03/93 ▸ 1995	7634348	**820159**	80	Y
1.9 TD,1.9 TDs *160/AQ55/AQ5C/EI53/EI55 EL55*	D	1929	160A6.000, 160D1.000	M		☞4	01/88 ▸ 1995	7614475	**819964**	80	Y
1.9 D *160AH55*	D	1929	160A7.000	M		☞4	10/89 ▸ 02/93	7625346	**819963**	80	Y
1.9 D,1.9 TDs *160/AR55/AW55/EH55*	D	1929	160A7.000, 160B6.046 160A6.046	M		☞4	06/90 ▸ 1995	7634348	**820159**	80	Y
Ulysse (94>98)										
1.9 TD *220/AE5/AE5U/AH5/AHX*	D	1905	XUD9TEF/L3, XUD9TEF/K, XUD9TEF/Y	M		☞4	06/94 ▸ 09/98	9616090180	**819950**	83	Y
2.1 TD *220/AJ5/AJ5U*	D	2088	P8C	M		☞4	03/96 ▸ 09/98	9616090180	**819950**	83	Y
Ulysse (98>2002)										
2.0 ie 16V *220AQ5*	E	1997	EW10J4/L4	M			10/98 ▸	9630066680	**820431**	89	Y
2.0 ie 16V *220AQ5*	E	1997	EW10J4/L4	A			10/98 ▸	9630066680	**820431**	89	Y
2.0 ie 16V *220/AL5/AV5*	E	1998	RFV	M			10/98 ▸	9616090280	**820471**	83	Y
1.9 TD *220/AE5/AH5/AHX*	D	1905	XUD9TEF/K, XUD9TEF/L3	M		☞4	10/98 ▸	9616090180	**819950**	83	Y
2.0 JTD,2.0 JTD 16V *220/AN5/AR50*	D	1997	DW10BTED+L4, DW10ATED4	M		☞4	10/99 ▸	9616090180	**819950**	83	Y
2.1 TD *220AJ5*	D	2088	P8C	M		☞4	10/98 ▸	9616090180	**819950**	83	Y
Ulysse (2002>)										
2.0 i 16V *179BXA1*	E	1997	EW10J4/L4	M			09/02 ▸	9630066680	**820431**	89	Y
2.0 i 16V *179BXA1*	E	1997	EW10J4/L4	A			09/02 ▸	9630066680	**820431**	89	Y
2.0 JTD 16V *179BXB1*	D	1997	DW10ATED4	M		☞4	09/02 ▸	9616090180	**819950**	83	Y
2.0 JTD 16V *179BXF1*	D	1997	DW10ATED4	A		☞4	03/03 ▸	9616090180	**819950**	83	Y
2.2 JTD 16V *179BXC1*	D	2179	DW12ATED4/L4	M		☞4	09/02 ▸	9616090180	**819950**	83	Y
Uno (83>89)										
55 *146AD45*	G	1116	138B.000-G	M		☞4	04/83 ▸ 04/84	5954579	**819939**	85	Y
55 *146AD45*	G	1116	138B.000-G	M		☞4	04/84 ▸ 11/85	7671375	**819940**	85	Y

• **New** Nouveau **Nuevo** Novo **Nuovo** Nieuw **Neu** Yeni Новый Nou

			CC		AC				Valeo	(°)C	
FIAT (.../...)											
Uno (83>89) (.../...)											
45,45 ES,45 Pop	*146/AA43/AA45/AA53/AA55 AB53/AB55/CD43/CD45/CD53 CD55, 16CD4CT, 14A/A4AC A5AC/B5AC*	E	903	146A.000, 146A1.000	M		☞4	01/83 ▸ 10/89	7630978	**819958**	85	Y
45	*16AA4CT, 16CD5CT, 146/CD4C/CD5C*	E	903	146A.000	M		☞4	11/85 ▸ 10/89	7630978	**819958**	85	Y
45,45 S	*146/AO43/AO45/AO4A/AO4C AO53/AO55/AO5A, 16A/O4CT O5CT*	E	999	156A2.000	M		☞1,4	10/85 ▸ 10/89	7589135	**819938**	87	Y
55	*14AD5AC, 146/AD43/AD45*	E	1116	138B.000	M		☞4	04/83 ▸ 04/84	5954579	**819939**	85	Y
55,55 S,60,60 S,SL	*14AD5AC, 146/AD43/AD45 AD53/AD55/AJ43/AJ45/AJ4C AJ53/AJ55/AJ5A, 16A/J4CT J5CT*	E	1116	146A4.000, 138B.000	M		☞4	04/84 ▸ 10/89	7671375	**819940**	85	Y
60 Selecta	*146/AJ13/AJ15*	E	1116	146A4.000	A		☞4	10/87 ▸ 1989	7671375	**819940**	85	Y
70 S	*146/AE53/AE55*	E	1301	138B2.000	M		☞4	04/83 ▸ 04/84	5954579	**819939**	85	Y
70,70 S,70 SL,70 SX	*16AR5CT, 146/AE53/AE55 AE5A/AM53/AM55/AR53/AR55 AR5A/BE53/BE55/BE5A/BM53*	E	1301	146A2.000, 138B2.000	M		☞4	04/84 ▸ 1989	7671375	**819940**	85	Y
75 ie		E	1498	138C2.048	M		☞1,4	1986 ▸ 1989	7589454	**820474**	87	Y
-	*16A65CT, 146/A653/A655*	D	1367	146B3.000	M		☞4	04/86 ▸ 1989	7618716	**819963**	80	Y
60	*146/AF53/AF55*	D	1697	149B3.000	M		☞4	10/85 ▸ 1989	7625346	**819963**	80	Y
Uno (89>95)											
Pop	*146/EA43/EA53/EA55*	E	903	146A.048	M		☞4	10/89 ▸ 09/92	7630978	**819958**	85	Y
Sting,Trend	*146EB55, 146EB53*	E	994	146B4.000	M			10/89 ▸ 12/93	7649055	**819885**	82	Y
45,45 S	*146/EC43/EC45/EC4C/EC53 EC55/EC5C/ED53/ED55/EE53 EE55*	E	999	156A2.000, 156A2.100 156A2.246	M		☞1,4	10/89 ▸ 12/93	7589135	**819938**	87	Y
60 S,S	*146/EF53/EF55/ET53/ET55*	E	1108	156C.046, 160A3.000	M		☞1,4	10/89 ▸ 12/93	7589135	**819938**	87	Y
60	*146/EF5C/EG53*	E	1116	146A4.000	M		☞1,4	10/89 ▸ 12/92	7589135	**819938**	87	Y
60	*146/EG13/EG15/EG1C*	E	1116	146A4.000, 146A4.048	A		☞4	07/90 ▸ 12/92	7671375	**819940**	85	Y
Trend	*146EJ55*	E	1116	146A6.000	M			10/89 ▸ 12/92	4409254	**819885**	82	Y
-	*146EQ53*	E	1301	146A2.000	M		☞4	10/89 ▸ 03/91	7671373	**819940**	85	Y
-	*146/ER53/EU53*	E	1372	146A8.046, 146A8.000	M			10/89 ▸ 09/93	7628332	**820473**	80	Y
70,70 SX	*146/EH53/EH55/EI53/EI55 ER53/EU53*	E	1372	146A8.046, 146C1.046 146C1.000, 146A8.000	M		☞1,4	10/89 ▸ 12/93	7613578	**820474**	87	Y
70,70S	*146/EK55/EL53/EL55*	E	1372	160A1.048, 146C2.028	M		☞1,4	10/89 ▸	7581201	**819960**	87	Y
-	*146EH15*	E	1372	146C1.000	A		☞1,4	10/89 ▸ 12/93	7613578	**820474**	87	Y
75S,75SX	*146/EM53/EM55*	E	1498	149C1.000	M		☞4	10/89 ▸ 12/93	7671373	**819940**	85	Y
-	*146/EM13/EM15*	E	1498	149C1.000	A		☞4	10/89 ▸ 12/93	7671373	**819940**	85	Y
70,70 S	*146/ES53/ES55/ES5C*	D	1367	146B3.000	M		☞4	10/89 ▸ 07/93	7618716	**819963**	80	Y
-	*146/E05C/E053/E055*	D	1697	149B3.000, 146B2.000	M		☞4	10/89 ▸ 08/95	7625346	**819963**	80	Y
-	*146/EP53/EP55*	D	1929	149B5.046	M		☞4	07/90 ▸ 03/94	7580642	**820472**	80	Y
Uno CS (87>)											
60	*16AF5CT, 146/A755/AF5A*	D	1697	149B3.000, 146B2.000	M		☞4	10/87 ▸ 1993	7625346	**819963**	80	Y
Uno Mondo (98>)											
1.0 i	*146EE55*	E	999	156A2.246	M		☞1,4	01/98 ▸	7589135	**819938**	87	Y
1.1	*146052, 158350*	E	1108	160A3.000	M		☞1,4	01/98 ▸	7589135	**819938**	87	Y
1.4	*146EK55*	E	1372	146C2.028	M		☞1,4	01/98 ▸	7581201	**819960**	87	Y
1.7 D	*158351, 146E055, 146/E0*	D	1697	146B2.000	M	-	☞4	01/98 ▸	7625346	**819963**	80	Y
FIAT											
Doblo (2000>2003)											
1.2 i	*223AXA1*	E	1242	223A5.000	M		☞1,4	10/00 ▸	7589135	**819938**	87	Y
1.6 i 16V	*223AXD1*	E	1596	182B6.000	M			10/01 ▸ 12/03	46776217	**820454**	88	Y
1.9 JTD	*223AXE1*	D	1910	182B9.000	M			10/01 ▸ 12/03	46785392	**820562**	88	Y
1.9 DS	*223AXB1*	D	1910	223A6.000	M		☞6	10/00 ▸ 12/03	46758434	●**820467**	88	Y
Doblo (2004>2005)											
1.2 i	*223AXA1*	E	1242	223A5.000	M		☞1,4	01/04 ▸	7589135	**819938**	87	Y

• **New** Nouveau **Nuevo** Novo **Nuovo** Nieuw **Neu** Yeni Новый Nou

Type Ctr.		CC		AC			OE	Valeo	(°)C	
FIAT (.../...)										
Doblo (2004>2005) (.../...)										
1.6 GNV 16V,1.6 i 16V *223AXD1*	E	1596	182B6.000	M			01/04 ▸	46776217	**820454**	88	Y
1.3 MTJ 16V *223AXG1*	D	1248	188A9.000	M			01/04 ▸ 12/05	55180041	**820563**	88	Y
1.9 JTD *223WXF1*	D	1910	223A7.000	M			09/05 ▸ 12/05	46785392	**820562**	88	Y
1.9 DS *223ZXB1*	D	1910	223A6.000	M		☞6	01/04 ▸ 12/05	46758434	●**820467**	88	Y
Doblo II (2006>)										
1.4 i 8V *223AXP1*	E	1368	350A1.000	M			01/06 ▸	55202176	**820935**	88	Y
1.6 GNV 16V *223AXD1*	E	1596	182B6.000	M			01/06 ▸	46776217	**820454**	88	Y
1.3 MJTD 16V *223/AXM1/AXN1*	D	1248	223A9.000, 199A2.000	M			01/06 ▸	55194271	**820934**	88	Y
1.9 MJTD 8V *223/AXH1/AXL1*	D	1910	186A9.000, 223B1.000	M			01/06 ▸	46785392	**820562**	88	Y
Doblo Cargo (2000>2003)										
1.2 i *223ZXA1*	E	1242	223A5.000	M		☞1,4	10/00 ▸	7589135	**819938**	87	Y
1.6 i 16V *223ZXD1*	E	1596	182B6.000	M			10/01 ▸	46776217	**820454**	88	Y
1.9 JTD *223/AXE1/ZXE1*	D	1910	182B9.000	M			10/01 ▸	46785392	**820562**	88	Y
Doblo Cargo (2004>2005)										
1.2 i *223ZXA1*	E	1242	223A5.000	M		☞1,4	01/04 ▸	7589135	**819938**	87	Y
1.3 MTJ 16V *223ZXG1, 223WXG1, 223AXG1*	D	1248	188A9.000	M			01/04 ▸ 12/05	55180041	**820563**	88	Y
1.9 JTD *223/AXF1/WXF1/ZXF1*	D	1910	182B9.000, 223A7.000	M			01/04 ▸	46785392	**820562**	88	Y
Doblo Cargo II (2006>)										
1.6 GNV *223WXD1*	G	1596	182B6.000-GNV	M			01/06 ▸	46776217	**820454**	88	Y
1.4 i *223/WXP1/ZXP1*	E	1368	350A1.000	M			01/06 ▸	55202176	**820935**	88	Y
1.3 MJTD 16V *223/AXG1/WXN1/ZXN1*	D	1248	199A2.000, 223A9.000	M			01/06 ▸	55194271	**820934**	88	Y
1.9 MJTD *223/WXL1/WXR1/ZXR1*	D	1910	223B2.000, 223B1.000	M			01/06 ▸	46785392	**820562**	88	Y
Ducato (81>94)										
1.8 *280* 30581 ▸	E	1796	169B	M		☞5,8	11/81 ▸ 06/90	9150072380	**819900**	82	Y
2.0 *280*	E	1971	170B	M		☞5,8	06/85 ▸ 06/90	9150072380	**819900**	82	Y
1.9 D,1.9 TD *280*	D	1929	149B1.000, 149B2.000	M		☞4	10/87 ▸ 06/90	7625346	**819963**	80	Y
2.5 D,2.5 TD *280*	D	2445	8144-21, 8144-61	M		☞4,8	06/85 ▸ 06/90	500329622	**820432**	82	Y
2.5 D *280*	D	2500	CRD93	M		☞4,8	06/85 ▸ 06/90	500329622	**820432**	82	Y
Ducato (90>94)										
2.0 *290/AY/BY/EH4/EHY/EHYW/EPMY/EPY/MAY MAYW/MTY/MTYW/MZY/NAY/NLY/NZY/RAPY RAY/RTPY/RY*	E	1971	170D-U8, 170B	M		☞5,8	07/90 ▸ 01/94	9150072380	**819900**	82	Y
Ducato (230) (94>2001)										
1.9 D *230/AMMC/AMMD/AMMF/AMMQ*	D	1905	XUD9A/K	M		☞4	06/98 ▸ 12/01	9616090180	**819950**	83	Y
1.9 TD *230/0NMQ/ANMA/ANMF/ANMP ANMQ/BLMA/BNMA/BNMF/BNMM BNMQ/ENMF*	D	1905	XUD9TEF/W3	M			06/98 ▸ 12/01	9616090280	**820471**	83	Y
1.9 D,1.9 TD *230/AAMA/AAMD/AAMF/AAMQ AAMR/ABMA/ABMD/ABMF/ABMP ABMQ/ABMR/BBMF/BBMP/EBMF*	D	1929	230A3.000, 230A2.000	M		☞2	02/94 ▸ 12/01	1307274080	**820538**	80	Y
1.9 TD *230/ACMA/ACMD/ACMF/BBMA BBMD/BBMF/BBMN/BBMQ/BBMR BCMA/BCMD/BCMF/BCMQ*	D	1929	230A4.000, 230A3.000	M		☞2	02/94 ▸ 12/01	1307270080	**820459**	80	Y
2.5 D,2.5 TD *230/ADMF/ADMT/ADMU/AEMP AEMT/AEMU/AFMP/BAMF/BDMA BDMB/BDMD/BDMF/BDMG/BDMH BDMN/BDMQ/BDMR/BDMS/BDMT BEMA/BEMB/BEMD/BEMF/BEMG BEMH/BEMN/BEMQ/BEMR/BEMS BEMT/BFMA/BFMB/BFMD/BFMF BFMG/BFMH/BFMN/BFMQ/BFMR BFMS/BLWF/CDMA/CDMB/CDMD CDME/CDMF/CDMG/CDMH/CDML CDMM/C*	D	2499	8140-67, 8140-47R, 8140-47	M		☞4,8	02/94 ▸ 12/01	500329622	**820432**	82	Y

• **New** Nouveau **Nuevo** Novo **Nuovo** Nieuw **Neu** Yeni Новый Nou

			CC		AC				OE	Valeo	(°)C	
FIAT (.../...)												
Ducato (230) (94>2001) (.../...)												
2.8 D,2.8 JTD,2.8 TDi	*233CIMN, 230/AIMF/AIMT AIMU/ALMP/ALMT/ALWP/ALWT APMF/APMP/APWP/BIMA/BIMC BIMD/BIMF/BIMH/BIMM/BIMN BIMP/BIMQ/BIMS/BIMT/BLMA BLMF/BLMH/BLMM/BLMN/BLMP BLMQ/BLMS/BLMT/BLMU/BLWA BLWF/BLWN/BLWQ/BLWS/BLWT BPMA/BPMF/BPMN/BPMP/BPMS BPMT/BPWD/BPWF/CEMN/CIMA CIME/CI*	D	2798	8140-43S, 8140-63, 8140-43	M		☞4,8	01/98 ▸ 12/01	500329622	**820432**	82	Y
2.8 JTD	*230*	D	2798	8140-43S	A		☞4,8	05/01 ▸ 12/01	500329622	**820432**	82	Y
Ducato (2002>2006)												
2.0 JTD	*244/AAMA/AAMF/AAMN/AAMP AAMR/BAMA/BAMF/BAMN/BAMR*	D	1997	RHV	M		☞4	01/02 ▸ 06/06	9616090180	**819950**	83	Y
2.8 JTD,2.8 TD	*244/APMF/APMN/APMP/APMR APWP/BPMA/BPMF/BPMH/BPMN BPMP/BPMR/BPMS/BPMT/BPNS BPWN/BPWR/CPMF/CPMN/CPWN*	D	2798	8140-43S, 8140-43, 8140-43N	M		☞4,8	01/02 ▸ 06/06	500329622	**820432**	82	Y
Duna												
1.1	*146A754, 146A7CT, 146A755*	E	1116	146A6.000	M			03/87 ▸ 12/91	4409254	**819885**	82	Y
1.3	*146AW55, 146AW54, 146AWCT*	E	1301	146A5.000	M			03/87 ▸ 12/91	4409254	**819885**	82	Y
1.7 D	*146/AF54/AF55/AFCT*	D	1697	149B3.000	M		☞4	03/87 ▸	7625346	**819963**	80	Y
Fiorino (147) (81>89)												
1.3 D	*147ADF1, 147DDF1*	D	1301	127A5.000	M			02/81 ▸ 1989	4409254	**819885**	82	Y
1050	*147AA53, 147AP14, 147AF14*	E	1049	127A.000	M			10/85 ▸ 1989	4409254	**819885**	82	Y
Fiorino (127) (78>87)												
903	*127/AF/AF1/AIIF*	E	903	127GL000	M			09/78 ▸ 1985	4311105	**819886**	87	Y
1050	*127A1IP, 127A1IV, 127A1IF*	E	1049	127A.000	M			09/79 ▸ 1987	4409254	**819885**	82	Y
Fiorino (146) (88>93)												
-	*146CG43, 146CG53, 16CG43D, 146C4 16CG53D*	E	1116	146A9.000	M			03/88 ▸ 06/93	4409254	**819885**	82	Y
-	*16AW52F, 146AW53, 16AW53F*	E	1301	146A5.000	M			03/88 ▸ 06/93	4409254	**819885**	82	Y
-	*146A953*	E	1498	149C1.000	M		☞4	07/90 ▸ 06/93	7671373	**819940**	85	Y
-	*146/CI53, 16A/F43D/F52F/F53D/F53E*	D	1697	146B2.000, 149B3.000	M		☞4	03/88 ▸ 06/93	7625346	**819963**	80	Y
-	*146CL53*	D	1697	149B4.046	M		☞4	07/90 ▸ 06/93	7580642	**820472**	80	Y
Fiorino (146) (93>2000)												
-	*146/RB52/RB53/RE52/RE53*	E	1372	146C5.000, 146D5.000	M		☞1	08/93 ▸ 09/00	7725918	**820466**	82	Y
LX	*146/RC52/RC53/RF*	E	1581	146D6.000, 146C6.000	M		☞1	08/93 ▸ 09/00	7725918	**820466**	82	Y
-	*146/RD52/RD53*	D	1697	146B2.000	M	+/-	☞4	08/93 ▸ 09/00	7625346	**819963**	80	Y
-	*146RH53*	D	1698	146D7.000	M	-	☞2	06/96 ▸ 09/00	46466123	**820460**	80	Y
-	*146RA52, 146RA53*	E	1301	146A5.000	M			08/93 ▸ 12/94	4409254	**819885**	82	Y
Fiorino (2008>)												
1.4 i	*225AXAI*	E	1360	KFV	M			12/07 ▸	9630066780	**820434**	89	Y
Scudo (95>2003)												
1.6 i	*220/WG5/XG5/XG59/YG5/YH5/ZG5*	E	1581	220A2.000	M		☞1	07/95 ▸	7778653	**820433**	87	Y
2.0 i 16V	*220/XQ5/XQ50*	E	1997	EW10J4/L4	M			09/00 ▸ 12/03	9630066780	**820434**	89	Y
2.0 i 16V	*220XQ40*	E	1997	EW10J4/L4	A			09/00 ▸ 12/03	9630066780	**820434**	89	Y
1.9 D	*220/XM50/XR5A/XU50/YM5/ZM5*	D	1868	DW8/W3, DW8B/L4	M		☞4	07/96 ▸	9616090180	**819950**	83	Y
1.9 D,1.9 TD 9616090180	*220/WH5C/XE5/XE59/XF5* **819950** *XF59/XH5/XH51/XH5A/XH5B XH50/YE5/YF5/YH5/YH5C/ZE5 ZE5A/ZF5/ZH5/ZH5A/ZH5B*	D 83	1905 Y	XUD9A/K, XUD9TEF/K, XUD9TEF/L3, XUD9TEF/W3	M		☞4	07/95	▸			

• **New** Nouveau **Nuevo** Novo **Nuovo** Nieuw **Neu** Yeni Новый Nou

Type Ctr.		cc		AC			OE	Valeo	(°)C	
FIAT (.../...)										
Scudo (95>2003) (.../...)										
2.0 JTD,2.0 JTD 16V *220/XN5O/XP5O/XR5A/B/YP5A*	D	1997	DW10BTED/L4, DW10ATED4, DW10BTED+L4	M		☞402/00	▸		9616090180	
819950 83 *ZP5/A*	Y									
Scudo (2004>2006)										
2.0 16V *220/KO5A/ZO5R/ZU5R*	E	1997	EW10J4/L4	M			01/04 ▸	9630066780	**820434**	89	Y
2.0 16V *220KO4A*	E	1997	EW10J4/L4	A			01/04 ▸	9630066780	**820434**	89	Y
1.9 D *220/YU5R/ZO5R/ZU5R*	D	1868	DW8B/L4	M		☞4	01/04 ▸	9616090180	**819950**	83	Y
2.0 JTD,2.0 JTD 16V *220/KP5A/YP5R/YV5R/ZP5R*	D	1997	DW10BTED/L4, DW10BTED+L4, DW10ATED4	M			☞401/04	▸	9616090180	
819950 83 *ZV5R, 222/0ZP5/0ZPS,V5 KR5A*	Y									
Strada Pick Up										
Trekking *178EXG*	E	1242	178B5.000	M	+/-	☞1,4	03/99 ▸	7589135	**819938**	87	Y
- *178/EX/EXH*	D	1697	176A3.000, 176A3.000F	M	+	☞2	03/99 ▸	7770236	**820463**	80	Y
Trekking *178/EX/EXH*	D	1697	176A3.000F, 176A3.000	M	-	☞2	03/99 ▸	7721399	**820462**	80	Y
Strada pick up (2003>)										
1.2 i *178EYA1*	E	1242	188A4.000	M			03/03 ▸	46737644	**820559**	87	Y
1.9 Ds *178EYD1*	D	1910	223A6.000	M	+	☞6	03/03 ▸	46800798	**820586**	88	Y
Talento										
2.0 *290/U4/UA4/UEH4/UT4*	E	1971	170B	M		☞5,8	11/88 ▸ 1994	9150072380	**819900**	82	Y
1.9 D *290/UAK/UEHK/UK/UTK*	D	1929	149B1.000	M		☞4	03/88 ▸ 1994	7625346	**819963**	80	Y
FORD										
Capri II										
2.0	E	1993	NEE	M		☞10	02/74 ▸ 12/77	6100629	**819854**	92	Y
2.0	E	1998	NYK	M			02/74 ▸ 12/77	0801587	**819847**	87	Y
2.0	E	1998	NYK	M			02/74 ▸ 12/77	6058444	**819848**	92	Y
2.0	E	1998	NYK	M			02/74 ▸ 12/77	6106381	**820525**	80	Y
2.3	E	2294	YYE	M			02/74 ▸ 12/77	6058444	**819848**	92	Y
2.3	E	2294	YYE	M			02/74 ▸ 12/77	0801587	**819847**	87	Y
2.3	E	2294	YYE	M			02/74 ▸ 12/77	6106381	**820525**	80	Y
Capri III										
1.3 *GEJP*	E	1296	J3N, JSD, J3C	M		☞10	01/78 ▸ 04/87	6100629	**819854**	92	Y
1.3	E	1298	J2N, J1E, J2F	M		☞10	06/79 ▸ 04/87	6100629	**819854**	92	Y
1.6	E	1592	LEN	M		☞10	01/78 ▸ 04/87	6100629	**819854**	92	Y
1.6	E	1593	LAN, LAC	M		☞10	02/79 ▸ 04/87	6100629	**819854**	92	Y
2.0	E	1993	NE3, NEN	M		☞10	01/78 ▸ 04/87	6100629	**819854**	92	Y
2.0	E	1998	NYL	M			08/81 ▸ 04/87	0801587	**819847**	87	Y
2.0	E	1998	NYL	M			08/81 ▸ 04/87	6058444	**819848**	92	Y
2.0	E	1998	NYL	M			08/81 ▸ 04/87	6106381	**820525**	80	Y
2.3	E	2294	YYN	M			06/79 ▸ 04/87	0801587	**819847**	87	Y
2.3	E	2294	YYN	M			06/79 ▸ 04/87	6058444	**819848**	92	Y
2.3	E	2294	YYN	M			06/79 ▸ 04/87	6106381	**820525**	80	Y
2.8 i *GECP2*	E	2792	PRN	M			01/81 ▸ 04/87	6058444	**819848**	92	Y
2.8 i *GECP2*	E	2792	PRN	M			01/81 ▸ 04/87	0801587	**819847**	87	Y
2.8 i *GECP2*	E	2792	PRN	M			01/81 ▸ 04/87	6106381	**820525**	80	Y
C-Max										
1.6 TDCi 16V	D	1560	1.6 DQ TDCI,G8DB/F	M			03/07 ▸	1313841	●**820951**	83	Y
1.8 TDCi	D	1753	1.8 TC LYNX	M	+/-		03/07 ▸ 08/10	1086282	**820475**	88	Y
Cortina										
1.6	E	1592	LEE	M		☞10	11/76 ▸ 1979	6100629	**819854**	92	Y
Cougar										
2.0 i *FT60T*	E	1998	EDB	M			09/98 ▸ 02/01	6866389	**820051**	88	Y
2.0 i *FT60T*	E	1998	EDB	M			09/98 ▸ 02/01	1001993	**820547**	92	Y

• **New** Nouveau **Nuevo** Novo **Nuovo** Nieuw **Neu** Yeni Новый Nou

			CC			AC				OE	Valeo	(°)C	
FORD (.../...)													
Escort (74>80)													
2000 *GATR*	E	1993	NE	M		☞10	06/76 ▸ 08/80	6100629	**819854**	92	Y
Escort (80>86)													
1.1	E	1117	GMA, GPA, GLA	M		☞10	08/80 ▸ 02/86	1509953	**819854**	92	Y
1.3	E	1296	JPA	M		☞10	08/80 ▸ 07/83	1509953	**819854**	92	Y
1.3	E	1296	JPA	M		☞10	08/83 ▸ 02/86	1635905	**819853**	87	Y
1.6,1.6 Turbo,1.6 i	E	1597	LNA, LRA, LUE, LUA	M		☞10	08/80 ▸ 02/86	1635905	**819853**	87	Y
1.6	E	1598	LPA	A		☞10	08/80 ▸ 07/81	1509953	**819854**	92	Y
1.6	E	1598	LPA	A		☞10	08/81 ▸ 02/86	1635905	**819853**	87	Y
1.6	E	1598	LPA	M		☞10	08/80 ▸ 07/81	1509953	**819854**	92	Y
1.6	E	1598	LPA	M		☞10	08/81 ▸ 02/86	1635905	**819853**	87	Y
1.6 D	D	1608	LT	M			04/84 ▸ 02/86	6176366	**819847**	87	Y
Escort (86>90)													
1.1	E	1117	GSG	M		☞10	01/86 ▸ 1990	1509953	**819854**	92	Y
1.3	E	1297	JLA	M		☞10	01/86 ▸ 1990	1635905	**819853**	87	Y
1.4,1.4 i *GAF*	E	1392	FUA, FU	M		☞10	01/86 ▸ 09/90	1635905	**819853**	87	Y
1.6,1.6 i	E	1597	LRB, LUC	M		☞10	01/86 ▸ 09/90	1635905	**819853**	87	Y
1.6	E	1597	LUC	A		☞10	01/86 ▸ 09/90	1635905	**819853**	87	Y
1.6 D	D	1608	LT	M			01/86 ▸ 1989	6176366	**819847**	87	Y
1.6 D	D	1608	LT	M			01/86 ▸ 1989	6176366	**819847**	87	Y
1.8 D	D	1753	RT	M			08/88 ▸ 09/90	1086282	**820475**	88	Y
Escort (90>94)													
1.4,1.4 i *AAL/BC/CC/CH, ALLCG, ABL BC/CC/CH, AVLCC, ANL/BE CC*	E	1392	F6G, FUH, F6F	M		☞10	09/90 ▸ 12/94	1635905	**819853**	87	Y
1.6,1.6 i *AAL/DC/FC/GC, ALLGG, ABL DC/FC/GC, ANL/DF/FF/GC*	E	1597	LUK, LUJ, LJF, LJE	M		☞10	09/90 ▸ 12/94	1635905	**819853**	87	Y
1.6 i *ABLWK, ALLWL, ANLWL, AAL/WL*	E	1597	L1E	M			09/92 ▸ 12/94	6866389	**820051**	88	Y
1.6 i *ABLWK, ALLWL, ANLWL, AAL/WL*	E	1597	L1E	M			09/92 ▸ 12/94	1001993	**820547**	92	Y
1.6 *AALEE*	E	1597	LUK	A		☞10	09/90 ▸ 12/94	1635905	**819853**	87	Y
1.6 i *AAL*	E	1597	L1E	A			09/92 ▸ 12/94	1001993	**820547**	92	Y
1.6 i *AAL*	E	1597	L1E	A			09/92 ▸ 12/94	6866389	**820051**	88	Y
1.8 i *AAL/RH/RL, ABL//RK/SE/SH/TH/TL ANLSK, ALL/RH/TK*	E	1796	RDA, RQB	M			01/92 ▸ 12/94	1001993	**820547**	92	Y
1.8 i *AAL/RH/RL, ABL//RK/SE/SH/TH/TL ANLSK, ALL/RH/TK*	E	1796	RQB, RDA	M			01/92 ▸ 12/94	6866389	**820051**	88	Y
1.8 i *AAL*	E	1796	RDA	A			01/92 ▸ 12/94	6866389	**820051**	88	Y
1.8 i *AAL*	E	1796	RDA	A			01/92 ▸ 12/94	1001993	**820547**	92	Y
2.0 i *ABL/C4/C4V*	E	1993	N5F	M		☞4	03/92 ▸ 12/94	1668305	**820069**	82	Y
2.0 i 16V *ABL/4Y0/LF/LL*	E	1998	N7A	M		☞8	02/91 ▸ 12/94	6201247	**820134**	88	Y
1.8 D,1.8 TD *AALHL, AALIM, ANLIM, ABLD ANLHH, ABLHK, AVL68 AALHF*	D	1753	RFD,RTE	M			09/90 ▸ 12/94	1086282	**820475**	88	Y
Escort (95>2001)													
1.3 i *AAL/6F/XE, AFLXE, ABL/6E/XE, AVL ANL//6H*	E	1299	J6A, J4	M		☞10	01/95 ▸ 09/01	1635905	**819853**	87	Y
1.4 i *ABL3H, AFL3J, ALL3K, ANL3L, AVL3 AAL/3J*	E	1392	F4B	M		☞10	01/95 ▸ 09/01	1635905	**819853**	87	Y
1.6 i *AAL/WL, AFLWL, ALLWM, ANLWM, ABL WK*	E	1597	L1H, L1K, L1E	M			01/95 ▸ 09/01	6866389	**820051**	88	Y
1.6 i *AAL/WL, AFLWL, ALLWM, ANLWM, ABL WK*	E	1597	L1H, L1E, L1K	M			01/95 ▸ 09/01	1001993	**820547**	92	Y
1.6 i *ABLAM, AFLAM, ALLAN, ANLAN, AAL/AM*	E	1597	L1K	A			01/95 ▸ 09/01	6866389	**820051**	88	Y
1.6 i *ABLAM, AFLAM, ALLAN, ANLAN, AAL/AM*	E	1597	L1K	A			01/95 ▸ 09/01	1001993	**820547**	92	Y
1.8 i *AAL/9M/RK, ABL/9M/RK, AFL/9M/RK ALL//90/RK, ANL/9M/RK*	E	1796	RDA, RKC, RQB	M			01/95 ▸ 09/01	6866389	**820051**	88	Y
1.8 i *AAL/9M/RK, ABL/9M/RK, AFL/9M/RK ALL//90/RK, ANL/9M/RK*	E	1796	RDA, RKC, RQB	M			01/95 ▸ 09/01	1001993	**820547**	92	Y
2.0 i *ABLC44*	E	1993	N5E	M		☞4	08/95 ▸ 12/95	1668305	**820069**	82	Y
2.0 i 16V *ABL//4Y0*	E	1998	N7A	M		☞8	08/95 ▸ 08/96	6201247	**820134**	88	Y

• **New** Nouveau **Nuevo** Novo **Nuovo** Nieuw **Neu** Yeni Новый Nou

			cc			AC			OE	Valeo	(°)C	
FORD (.../...)												
Escort (95>2001) (.../...)												
1.8 D,1.8 TD	*AFLBN, ANLBN, AALBN ANL1N, AAL1M, ANL97 AFL97, ABLBN, AAL97 ABLBNC, AFL7K, AAL7L AFL1L, ABL1L, AVL, ABL7K ANL7N, ABL7KC, AVL18 ABL97*	D	1753	RFD,RFS,RTH,RV	M			01/95 ▸ 09/01	1086282	**820475**	88	Y
Fiesta (76>83)												
0.9		E	957	TKA	M		☞8	06/76 ▸ 08/83	1472378	**820290**	92	Y
1.1		E	1117	GL-CVH	M		☞8	06/76 ▸ 08/83	1472378	**820290**	92	Y
1.3		E	1296	J3E	M		☞10	1983 ▸ 08/83	1509953	**819854**	92	Y
1.3		E	1296	J3E	M		☞8	03/77 ▸ 1983	1472378	**820290**	92	Y
1.6		E	1597	L3A	M		☞8	10/81 ▸ 08/83	1472378	**820290**	92	Y
Fiesta (83>89)												
0.9		E	957	TLA, TKB	M		☞8	08/83 ▸ 1989	1472378	**820290**	92	Y
1.1	*FBD, FVD*	E	1117	GL-CVH	M		☞8	08/83 ▸ 1989	1472378	**820290**	92	Y
1.1	*FBD*	E	1117	GL-CVH	A		☞8	02/86 ▸ 1989	1472378	**820290**	92	Y
1.3		E	1296	JP	M		☞10	08/83 ▸ 12/85	1509953	**819854**	92	Y
1.4		E	1392	FUA	M		☞10	01/86 ▸ 1989	1059953	**819854**	92	Y
1.6		E	1597	LUC, LU	M		☞10	02/84 ▸ 1989	1635905	**819853**	87	Y
1.6 D		D	1608	LTB	M			02/84 ▸ 1989	6176366	**819847**	87	Y
Fiesta (89>95)												
1.1	*FAJ/1B/AB/BB, FBJ/1A/AA/BA*	E	1118	GUE	M		☞8	02/89 ▸ 12/92	1472378	**820290**	92	Y
1.1	*FAJCB, FBJCA*	E	1118	GUE	A		☞8	02/89 ▸ 12/92	1472378	**820290**	92	Y
1.4	*FAJ/DC/LC, FBJ/DB/LB*	E	1392	FUF	M		☞10	02/89 ▸ 05/91	1059953	**819854**	92	Y
1.4,1.4 i	*FAJ/5H/DC/LC/MC/MD/ME FBJ/5G/DB/LB/MB/MC/MD*	E	1392	FUF, F6E, F4A	M		☞10	02/89 ▸ 07/95	1635905	**819853**	87	Y
1.4	*FAJEC, FBJEB*	E	1392	FUF	A		☞10	02/89 ▸ 05/91	1635905	**819853**	87	Y
1.4	*FAJEC, FBJEB*	E	1392	FUF	A		☞10	02/89 ▸ 05/91	1059953	**819854**	92	Y
1.6,1.6 i,1.6 i Turbo	*FAJ/FC, FBJ//FB/GE/TTF*	E	1597	LUH, LJC, LJD, LNA	M		☞10	02/89 ▸ 01/94	1635905	**819853**	87	Y
1.6 i 16V	*FAJ6I, FBJ6I*	E	1597	L1G	M			02/94 ▸ 07/95	6866389	**820051**	88	Y
1.6 i 16V	*FAJ6I, FBJ6I*	E	1597	L1G	M			02/94 ▸ 07/95	1001993	**820547**	92	Y
1.8 i 16V	*FAJ/3G/4J, FBJ//4G/4H*	E	1796	RDB, RQC	M			02/92 ▸ 07/95	6866389	**820051**	88	Y
1.8 i 16V	*FAJ/3G/4J, FBJ//4G/4H*	E	1796	RQC, RDB	M			02/92 ▸ 07/95	1001993	**820547**	92	Y
1.8 D,1.8 TD	*FBJVE, FBJNH, FAJNI FAJTF, FBJJE, FAJVG FAJNG, FBJNE, FVJ8 FBJTE, FAJJF, FVJ9D FVJ9, FAJNF*	D	1753	RFE,RTC,RTD	M			02/89 ▸ 07/95	1086282	**820475**	88	Y
Fiesta (95>99)												
1.2 i 16V	*JASDHA*	E	1242	DHA	A			08/95 ▸ 08/99	1303374	●**820565**	82	Y
1.2 i 16V	*JASDHA, JBSDHA*	E	1242	DHA	M			08/95 ▸ 09/99	1303374	●**820565**	82	Y
1.4 i 16V	*JBSFHA, JASFHA, J5*	E	1388	FHA	M			01/96 ▸ 08/99	1303374	●**820565**	82	Y
1.8 D	*JASRTJ, JBSRTK, JASRTK, JVSRTK JVSRTJ, JBSRTJ*	D	1753	RTJ,RTK	M			08/95 ▸ 08/99	1086282	**820475**	88	Y
Fiesta (99>2002)												
1.2 i 16V	*JBS, JAS*	E	1242	DHD	A			10/99 ▸ 03/02	1303374	●**820565**	82	Y
1.2 i 16V	*JBS, JAS*	E	1242	DHB,DHC	M			08/99 ▸ 03/02	1303374	●**820565**	82	Y
1.4 i 16V	*JBS, JAS*	E	1388	FHA,FHE	M			08/99 ▸ 03/02	1303374	●**820565**	82	Y
1.8 D,1.8 TDdi	*JBS, JAS, JASRTJ, JBSRTJ*	D	1753	DI-TD,RTJ,RTK	M			09/99 ▸ 03/02	1086282	**820475**	88	Y
Fiesta (2002>2005)												
1.2 i 16V	*NH*	E	1242	1.25 ZETEC-S,1.25 ZETEC-S/DU	M			02/03 ▸ 08/05	1306004	●**820565**	82	Y
1.2 i 16V	*NH*	E	1242	1.25 ZETEC-S,1.25 ZETEC-S/DU	M			02/03 ▸ 09/03	1303374	●**820565**	82	Y
1.4 i 16V	*NH*	E	1388	ZETEC-S 1.4 EFI	M			03/02 ▸ 08/05	1306004	●**820565**	82	Y
1.4 i 16V	*NH*	E	1388	ZETEC-S 1.4 EFI	M			03/02 ▸ 09/03	1303374	●**820565**	82	Y
1.6 i 16V	*NH*	E	1596	ZETEC-S 1.6 EFI	A			03/02 ▸ 08/05	1303374	●**820565**	82	Y
1.6 i 16V	*NH*	E	1596	ZETEC-S 1.6 EFI	A			08/03 ▸ 09/05	1306004	●**820565**	82	Y
1.6 i 16V	*NH*	E	1596	ZETEC-S 1.6 EFI	M			08/03 ▸ 09/05	1306004	●**820565**	82	Y

• **New** Nouveau **Nuevo** Novo **Nuovo** Nieuw **Neu** Yeni Новый Nou

											(°)C	
FORD (.../...)												
Fiesta (2002>2005) (.../...)												
1.6 i 16V *NH*	E	1596	ZETEC-S 1.6 EFI	M			03/02 ▸ 08/05	1303374	●820565	82	Y
1.6 TDCi 16V *NH*	D	1560	HHDA/B	M			11/04 ▸ 08/05	1313841	●820951	83	Y
Fiesta (2005>)												
1.2 i 16V	E	1242	1.25 ZETEC-S/DU	M			10/05 ▸	1303374	●820565	82	Y
1.4 i 16V	E	1388	ZETEC-S 1.4 EFI	M			10/05 ▸	1306004	●820565	82	Y
1.6 i 16V	E	1596	ZETEC-S 1.6 EFI	A			10/05 ▸	1306004	●820565	82	Y
1.6 i 16V	E	1596	ZETEC-S 1.6 EFI	M			10/05 ▸	1306004	●820565	82	Y
2.0 i 16V	E	1999	NAJB	M			10/05 ▸	1306004	●820565	82	Y
1.6 TDCi 16V	D	1560	HHJA/B	M			10/05 ▸ 11/08	1313841	●820951	83	Y
Fiesta (2008>)												
1.25 i 16V	E	1242	1.25 DURATEC	M	+/-		10/08 ▸	1306004	●820565	82	Y
1.4 i 16V	E	1388	1.4 DURATEC	A	+/-		10/08 ▸	1306004	●820565	82	Y
1.4 i 16V	E	1388	1.4 DURATEC	M	+/-		10/08 ▸	1306004	●820565	82	Y
Focus (98>2001)												
1.4 i 16V *DNW, DBW, DAW, DFW*	E	1388	FXDA,FXDC	M			10/98 ▸ 10/01	1303377	●820564	74	Y
1.4 i 16V *DBW, DAW, DNW, DFW*	E	1388	FXDA,FXDC	M			10/98 ▸ 10/01	1303374	●820565	82	Y
1.6 i 16V *DNW, DAW, DBW, DFW*	E	1596	FYDA,FYDC	A			10/98 ▸ 10/01	1303377	●820564	74	Y
1.6 i 16V *DFW, DBW, DAW, DNW*	E	1596	FYDA,FYDC	A			10/98 ▸ 10/01	1303374	●820565	82	Y
1.6 i 16V *DAW, DNW, DBW, DFW*	E	1596	FYDA,FYDC	M			10/98 ▸ 10/01	1303377	●820564	74	Y
1.6 i 16V *DFW, DBW, DNW, DAW*	E	1596	FYDA,FYDC	M			10/98 ▸ 10/01	1303374	●820565	82	Y
1.8 i 16V *DBW, DFW, DNW, DAW*	E	1796	EYDA, EYDC	M			10/98 ▸ 10/01	1001993	820547	92	Y
1.8 i 16V *DFW*	E	1796	EYDA	A			10/98 ▸ 10/01	1001993	820547	92	Y
1.8 i 16V *DBW, DFW, DNW, DAW*	E	1796	EYDA,EYDC	M			10/98 ▸ 10/01	6866389	820051	88	Y
1.8 i 16V *DFW*	E	1796	EYDA	A			10/98 ▸ 10/01	6866389	820051	88	Y
2.0 i 16V *DBW, DFW, DNW, DAW*	E	1988	EDDA,EDDC	M			10/98 ▸ 10/01	6866389	820051	88	Y
2.0 i 16V *DBW, DFW, DNW, DAW*	E	1988	EDDA, EDDC	M			10/98 ▸ 10/01	1001993	820547	92	Y
1.8 TDCi,1.8 TDi *DNW, DNY, DFY, DFW, DBY DAY, DAW, DBW*	D	1753	1.8 TC LYNX,BHDA/B,C9DA/B/C,FFDA	M			10/98 ▸ 10/01	1086282	820475	88	Y
Focus (2001>2003)												
1.4 i 16V *DBW, DAW, DNW, DFW*	E	1388	FXDA,FXDC	M			11/01 ▸ 08/04	1303377	●820564	74	Y
1.4 i 16V *DBW, DAW, DFW, DNW*	E	1388	FXDA,FXDC	M			11/01 ▸ 08/04	1306004	●820565	82	Y
1.6 i 16V *DNW, DAW, DFW, DBW*	E	1596	FYDA	A			11/01 ▸ 08/04	1303377	●820564	74	Y
1.6 i 16V *DNW, DBW, DFW, DAW*	E	1596	FYDA	A			11/01 ▸ 08/04	1306004	●820565	82	Y
1.6 i,1.6 i 16V *DAW, DNW, DFW, DBW*	E	1596	16LSEZ,FYDA,FYDC	M			11/01 ▸ 08/04	1303377	●820564	74	Y
1.6 i,1.6 i 16V *DFW, DAW, DBW, DNW*	E	1596	16LSEZ,FYDA,FYDC	M			11/01 ▸ 08/04	1306004	●820565	82	Y
1.8 i 16V *DBW, DFW, DNW, DAW*	E	1796	EYDC, EYDA	M			11/01 ▸	1001993	820547	92	Y
1.8 i 16V *DFW*	E	1796	EYDA	A			11/01 ▸	1001993	820547	92	Y
1.8 i 16V *DBW, DFW, DNW, DAW*	E	1796	EYDA,EYDC	M			11/01 ▸ 08/04	6866389	820051	88	Y
1.8 i 16V *DFW*	E	1796	EYDA	A			11/01 ▸ 08/04	6866389	820051	88	Y
2.0 i 16V,2.0 i Turbo 16V *DBW, DFW, DNW, DAW*	E	1988	EDDC, EDDA, ZH20EST, D20RS	M			11/01 ▸	1001993	820547	92	Y
2.0 i 16V *DBW, DFW, DNW, DAW*	E	1988	EDDA,EDDC	M			11/01 ▸ 08/04	6866389	820051	88	Y
1.8 TDCi,1.8 TDdi *DAW, DNW, DBW, DFW, DAY DFY, DBY*	D	1753	1.8 TC LYNX,BHDA/B,C9DA/B/C,FFDA	M			11/01 ▸ 08/04	1086282	820475	88	Y
Focus (2004>)												
1.4 i 16V	E	1388	ZETEC-S 1.4 EFI	M			09/04 ▸	1306001	●820564	74	Y
1.4 i 16V	E	1388	ZETEC-S 1.4 EFI	M			09/04 ▸	1306004	●820565	82	Y
1.6 i 16V	E	1596	HWDA/B	A			09/04 ▸	1306001	●820564	74	Y
1.6 i 16V	E	1596	HWDA/B	A			09/04 ▸	1306004	●820565	82	Y
1.6 i,1.6 i 16V	E	1596	16LSEZ,HWDA/B	M			09/04 ▸	1306001	●820564	74	Y
1.6 i,1.6 i 16V	E	1596	16LSEZ,HWDA/B	M			09/04 ▸	1306004	●820565	82	Y
1.6 TDCi 16V	D	1560	HHDA/B	A			09/04 ▸	1313841	●820951	83	Y
1.6 TDCi 16V	D	1560	G8DA/B,HHDA/B	M			09/04 ▸	1313841	●820951	83	Y
1.8 TDCi	D	1753	KKDA	M			11/04 ▸ 12/07	1086282	820475	88	Y
Focus II (2007>)												
1.4 16V	E	1388	ZETEC-S 1.4 EFI	M	+/-		12/07 ▸	1306004	●820565	82	Y
1.6 16V	E	1596	ZETEC-S 1.6 EFI	A	+/-		12/07 ▸	1306004	●820565	82	Y
1.6 16V,1.6 Ti-VCT	E	1596	HXDA,ZETEC-S 1.6 EFI	M	+/-		12/07 ▸	1306004	●820565	82	Y
1.6 TDCi,1.6 TDCi 110,1.6 TDCi 90	D	1560	1.6 DQ TDCI,G8DA,G8DB/F	M	+/-		12/07 ▸	1313841	●820951	83	Y

• **New** Nouveau **Nuevo** Novo **Nuovo** Nieuw **Neu** Yeni Новый Nou

Type Ctr.		cc		AC		2 3	OE	Valeo	(°)C	
FORD (.../...)										
Focus II (2007>) (.../...)										
1.8 TDCi	D	1753	1.8 TC LYNX	M		12/07 ▸ 04/10	1086282	**820475**	88	Y
Focus Coupé Cabriolet (2006>)										
1.6 i 16V	E	1596	HWDA/B	M		07/06 ▸	1306004	●**820565**	82	Y
Focus C-Max (03>07)										
1.6 i 16V *DM*	E	1596	HWDA/B	M		10/03 ▸ 02/07	1306001	●**820564**	74	Y
1.6 i 16V *DM*	E	1596	HWDA/B	M		10/03 ▸ 02/07	1306004	●**820565**	82	Y
1.6 TDCi 16V *DMIG, DMJG*	D	1560	G8DA/B,HHDA/B	A		10/03 ▸ 02/07	1313841	●**820951**	83	Y
1.6 TDCi 16V *DMBF, DMIF, DMJF, DM*	D	1560	G8DA/B,HHDA/B	M		10/03 ▸ 02/07	1313841	●**820951**	83	Y
1.8 TDCi	D	1753	KKDA	M		01/05 ▸ 02/07	1086282	**820475**	88	Y
Focus C-Max (2007>)										
1.6 i 16V	E	1596	1.6 ZETEC-S	M		03/07 ▸	1306004	●**820565**	82	Y
Fusion (2002>2005)										
1.25 i 16V	E	1242	1.25 ZETEC-S/DU	M		08/04 ▸ 09/05	1306004	●**820565**	82	Y
1.4 i 16V	E	1388	ZETEC-S 1.4 EFI	M		08/03 ▸ 09/05	1306004	●**820565**	82	Y
1.4 i 16V	E	1388	ZETEC-S 1.4 EFI	M		06/02 ▸ 09/05	1303374	●**820565**	82	Y
1.6 i 16V	E	1596	ZETEC-S 1.6 EFI	A		03/04 ▸ 09/05	1306004	●**820565**	82	Y
1.6 i 16V	E	1596	ZETEC-S 1.6 EFI	A		03/04 ▸ 09/05	1303374	●**820565**	82	Y
1.6 i 16V	E	1596	ZETEC-S 1.6 EFI	M		06/02 ▸ 09/05	1303374	●**820565**	82	Y
1.6 i 16V	E	1596	ZETEC-S 1.6 EFI	M		08/03 ▸ 09/05	1306004	●**820565**	82	Y
1.6 TDCi 16V	D	1560	HHDA/B	M		11/04 ▸ 09/05	1313841	●**820951**	83	Y
Fusion (2005>)										
1.2 i 16V	E	1242	1.25 ZETEC-S/DU	M		10/05 ▸	1306004	●**820565**	82	Y
1.4 i 16V	E	1388	ZETEC-S 1.4 EFI	M		10/05 ▸	1306004	●**820565**	82	Y
1.6 i 16V	E	1596	ZETEC-S 1.6 EFI	A		10/05 ▸	1306004	●**820565**	82	Y
1.6 TDCi 16V	D	1560	HHJA/B	M		10/05 ▸	1313841	●**820951**	83	Y
Galaxy (95>2000)										
2.0 i *WGRNSE*	E	1998	NSE	M		☞8 05/95 ▸	6201247	**820134**	88	Y
2.0 i *WGRNSE*	E	1998	NSE	A		☞8 05/95 ▸	6201247	**820134**	88	Y
2.3 i 16V *WGRY5*	E	2295	Y5	M		☞8 01/97 ▸	6201247	**820134**	88	Y
2.3 i 16V *WGRY5*	E	2295	Y5	A		☞8 01/97 ▸	6201247	**820134**	88	Y
2.8 i VR6 *WGRAAA*	E	2792	PW	M		05/95 ▸	1018799	**820064**	80	Y
2.8 i VR6 *WGRAAA*	E	2792	PW	A		05/95 ▸	1018799	**820064**	80	Y
1.9 TDi *WGR/1Z1/AFN*	D	1896	1.9N, 1.9P	M		☞4 11/95 ▸	1031881	**820168**	87	Y
Galaxy (2000>)										
2.0 i	E	1998	NSE	M		☞8 01/01 ▸	6201247	**820134**	88	Y
2.8 i V6	E	2792	PW-204	M		04/00 ▸	1018799	**820064**	80	Y
2.8 i V6	E	2792	PW-204	A		04/00 ▸	1018799	**820064**	80	Y
2.8 i V6	E	2792	PW	A		04/00 ▸ 04/06	1032249	**820065**	87	Y
2.8 i V6	E	2792	PW	M		04/00 ▸ 04/06	1032249	**820065**	87	Y
1.9 TDi	D	1896	1.9TC, 1.9TI	M		☞4 04/00 ▸	1031881	**820168**	87	Y
1.9 TDi	D	1896	1.9TC	A		☞4 04/00 ▸	1031881	**820168**	87	Y
Galaxy (2006>)										
1.8 TDCi	D	1753	1.8 TC LYNX,1.8 TCD LYNX	M		04/06 ▸ 04/10	1086282	**820475**	88	Y
Granada (77>82)										
2300	E	2294	YY	M		09/77 ▸ 08/82	6058444	**819848**	92	Y
2300	E	2294	YY	M		09/77 ▸ 08/82	0801587	**819847**	87	Y
2300	E	2294	YY	A		09/78 ▸ 08/82	0801587	**819847**	87	Y
2300	E	2294	YY	A		09/78 ▸ 08/82	6058444	**819848**	92	Y
2300	E	2294	YY	A		09/78 ▸ 08/82	6106381	**820525**	80	Y
2300	E	2294	YY	M		09/77 ▸ 08/82	6106381	**820525**	80	Y
2800,2800 i	E	2792	PR, PY	M		09/77 ▸ 08/82	0801587	**819847**	87	Y
2800,2800 i	E	2792	PY, PR	M		09/77 ▸ 08/82	6058444	**819848**	92	Y
2800	E	2792	PY	A		09/77 ▸ 08/82	0801587	**819847**	87	Y
2800	E	2792	PY	A		09/77 ▸ 08/82	6058444	**819848**	92	Y
2800	E	2792	PY	A		09/77 ▸ 08/82	6106381	**820525**	80	Y

• **New** Nouveau **Nuevo** Novo **Nuovo** Nieuw **Neu** Yeni Новый Nou

Type Ctr.		CC		AC		2 3	OE	Valeo	(°)C	
FORD (.../...)										
Granada (77>82) (.../...)										
2800,2800 i	E	2792	PR,PY	M			09/77 ▸ 08/82	6106381	**820525**	80	Y
2500 D	D	2499	STR	M		☞8	08/81 ▸ 08/82	1612191	**819839**	83	Y
Maverick (93>98)										
2.4 i *TBFNKU, KBF/NKQ/NKU*	E	2389	BF	M		☞4,9	05/96 ▸ 03/98	1961674	**820181**	76	N
2.4 i *KBF/NKQ/NKV/NYQ/NYV*	E	2389	BF	M			02/93 ▸ 04/96	1953232	**820176**	82	N
2.7 TD,2.7 TDi *KBF/NKQ/NUQ/NVQ, KVP/NKQ NKV/NYQ/NYV, TVPUKQ, TBF UKQ/UUQ/UVQ*	D	2663	VP, VPI	M		☞4,8	02/93 ▸ 01/98	1956976	**820476**	82	Y
2.7 TD,2.7 TDi *KVPNYQ, KBFNUQ, KVPNKV KBFNVQ, KVPNKQ, TBFUVQ TBFUKQ, TVPUKQ, KBFNKQ KVPNYV, TBFUUQ*	D	2663	TD27,TD27E	M			02/93 ▸ 03/98	1957271	**820178**	88	Y
Maverick (2000>)										
2.0 i,2.0 i 16V	E	1988	EDD-122, EDDC	M			12/00 ▸	1001993	**820547**	92	Y
Mondeo (93>2000)										
1.6 i *BFP, BNP, BAP*	E	1597	L1J-90, L1F, L1	M			01/93 ▸ 08/00	1001993	**820547**	92	Y
1.6 i *BFP, BNP, BAP*	E	1597	L1F, L1J-90, L1	M			01/93 ▸ 08/96	6866389	**820051**	88	Y
1.8 i *BFP, BAP//4, BNP//4*	E	1796	RKA, RKJ	M			01/93 ▸ 08/96	6866389	**820051**	88	Y
1.8 i *BFP, BAP//4, BNP//4*	E	1796	RKA, RKJ	M			01/93 ▸ 08/00	1001993	**820547**	92	Y
1.8 i *BFP, BNP, BAP*	E	1796	RKJ, RKA	A			06/93 ▸ 08/00	1001993	**820547**	92	Y
1.8 i *BFP, BNP, BAP*	E	1796	RKA, RKJ	A			06/93 ▸ 08/96	6866389	**820051**	88	Y
2.0 i *BFP, BNP, BAP*	E	1988	NGA	M			08/96 ▸ 08/00	1001993	**820547**	92	Y
2.0 i *BFP, BNP, BAP*	E	1988	NGA	M			08/96 ▸ 08/00	6866389	**820051**	88	Y
2.0 i *BFP, BNP, BAP*	E	1988	NGA	A			08/96 ▸ 08/00	1001993	**820547**	92	Y
2.0 i *BFP, BNP, BAP*	E	1988	NGA	A			08/96 ▸ 08/00	6866389	**820051**	88	Y
2.0 i *BAP//4, BFP//4, BNP//4*	E	1998	NGA	M			01/93 ▸ 08/96	1001993	**820547**	92	Y
2.0 i *BAP//4, BFP//4, BNP//4*	E	1998	NGA	M			01/93 ▸ 08/96	6866389	**820051**	88	Y
2.0 i *BFP, BNP, BAP*	E	1998	NGA	A			06/93 ▸ 08/96	6866389	**820051**	88	Y
2.0 i *BFP, BNP, BAP*	E	1998	NGA	A			06/93 ▸ 08/96	1001993	**820547**	92	Y
2.5 i V6 *BAP, BFP*	E	2495	SE	M			04/99 ▸ 08/00	1001993	**820547**	92	Y
2.5 i V6 24V *BFP, BNP, BAP*	E	2544	SEA	M			08/96 ▸ 08/00	1001993	**820547**	92	Y
2.5 i V6 24V *BFP, BNP, BAP*	E	2544	SEA	A			08/96 ▸ 08/00	1001993	**820547**	92	Y
1.8 TD *BNP, BAP, BFP, GBP*	D	1753	RFM,RFN	M	+/-		06/93 ▸ 08/00	1086282	**820475**	88	Y
Mondeo (2000>)										
1.8 i 16V *WFO/AXX/FXX/NXX*	E	1798	CGBB, CHBA, CGBA, CHBB	M			10/00 ▸	1302261	**820989**	98	Y
2.0 i 16V *WFO/AXX/FXX/NXX*	E	1999	CJBA, CJBB	M			10/00 ▸	1302261	**820989**	98	Y
2.0 i 16V *WFO/AXX/FXX/NXX*	E	1999	CJBB, CJBA	A			10/00 ▸	1302261	**820989**	98	Y
2.0 DI 16V,2.0 TDCi 16V 2.0 TDDI 16V *WFO/AXX/FXX/NXX*	D	1998	D5BA, D6BA, FMBA	M		☞8	10/00 ▸	1096283	**820542**	88	Y
2.0 TDCi 16V *WFO/AXX/FXX/NXX*	D	1998	FMBA	A		☞8	10/01 ▸	1096283	**820542**	88	Y
Mondeo (2003>)										
1.8 SCi 16V	E	1798	ZH18	M			06/03 ▸	1302261	**820989**	98	Y
2.0 i 16V	E	1999	CJBB	M			06/03 ▸ 04/05	1358178	**820989**	98	Y
2.0 i 16V	E	1999	CJBB	A			06/03 ▸ 04/05	1358178	**820989**	98	Y
2.0 TDCi 16V,2.0 TDDi 16V	D	1998	D5BA,D6BA,FMBA	M		☞8	06/03 ▸ 04/05	1096283	**820542**	88	Y
2.0 TDCi 16V	D	1998	D6BA,FMBA	A		☞8	06/03 ▸ 04/05	1096283	**820542**	88	Y
2.2 TDCi 16V	D	2198	DURATO22	M		☞8	10/04 ▸ 04/05	1096283	**820542**	88	Y
Mondeo (2005>)										
1.8 SCi 16V,1.8 i 16V	E	1798	DURA18,ZH18	M			05/05 ▸ 06/07	1358178	**820989**	98	Y
2.0 i 16V	E	1999	2.0L DURATEC-HE	M			05/05 ▸ 06/07	1358178	**820989**	98	Y
2.0 i 16V	E	1999	2.0L DURATEC-HE	A			05/05 ▸ 06/07	1358178	**820989**	98	Y
2.0 TDCi 16V	D	1998	DURATO20, 2.0 DI DURATORQ	M		☞8	05/05 ▸	1096283	**820542**	88	Y
2.2 TDCi 16V	D	2198	DURATO22	M		☞8	05/05 ▸	1096283	**820542**	88	Y
Mondeo III (2007>)										
1.6 Ti-VCT 16V	E	1596	1.6 ZETEC-S	M			06/07 ▸	1306004	●**820565**	82	Y

• **New** Nouveau **Nuevo** Novo **Nuovo** Nieuw **Neu** Yeni Новый Nou

Type Ctr.		cc		AC		2 3	OE	Valeo	(°)C	
FORD (.../...)										
Mondeo III (2007>) (.../...)										
1.8 TDCi	D	1753	1.8 DQ-TDCI ECO,1.8 TC LYNX 1.8 TCD LYNX	M			06/07 ▸ 09/10	1086282	**820475**	88	Y
Orion (83>90)										
1300	E	1296	JP, JPA	M		☞10	09/83 ▸ 1990	1635905	**819853**	87	Y
1400	E	1392	FUA	M		☞10	02/86 ▸ 1990	1635905	**819853**	87	Y
1600	E	1597	LUA	M		☞10	02/86 ▸ 1990	1635905	**819853**	87	Y
1600	E	1597	LUA	A		☞10	02/86 ▸ 1990	1635905	**819853**	87	Y
1600	E	1598	LPA	M		☞10	09/83 ▸ 02/86	1635905	**819853**	87	Y
1600	E	1598	LPA	A		☞10	09/83 ▸ 02/86	1635905	**819853**	87	Y
1600 D	D	1608	LT	M			09/83 ▸ 1988	6176366	**819847**	87	Y
1800 D	D	1753	RT	M			08/88 ▸ 08/90	1086282	**820475**	88	Y
Orion (90>93)										
1.3 *AFL*	E	1297	JB	M			09/90 ▸ 09/93	1663819	**820051**	88	Y
1.4,1.4 i *AFL*	E	1392	FUH, F6F, F6G	M			09/90 ▸ 09/93	1663819	**820051**	88	Y
1.6,1.6 i *AFL*	E	1597	L1E, LUJ, LJF, LUK, LJE	M			09/90 ▸ 09/93	6866389	**820051**	88	Y
1.6 i *AFL*	E	1597	L1E	M			01/92 ▸ 09/93	1001993	**820547**	92	Y
1.6 *AFL*	E	1597	LU	A			09/90 ▸ 09/93	1663819	**820051**	88	Y
1.8 i *AFL*	E	1796	RDA, RQB	M			01/92 ▸ 09/93	6866389	**820051**	88	Y
1.8 i *AFL*	E	1796	RDA, RQB	M			01/92 ▸ 09/93	1001993	**820547**	92	Y
1.8 D *AFL*	D	1753	RT	M			09/90 ▸ 09/93	1663819	**820051**	88	Y
1.8 D *AFL*	D	1753	RT	M			09/90 ▸ 09/93	1086282	**820475**	88	Y
Puma										
1.4 i 16V *ECV*	E	1388	FHD,FHF	M			01/98 ▸ 10/00	1303374	●**820565**	82	Y
1.6 i 16V *ECV*	E	1596	ZH16S	M			09/00 ▸ 12/01	1303377	●**820564**	74	Y
1.6 i 16V *ECV*	E	1596	ZH16S	M			09/00 ▸ 12/01	1303374	●**820565**	82	Y
1.7 i 16V *ECV*	E	1679	MHA-160	M			10/99 ▸ 10/00	1303377	●**820564**	74	Y
1.7 i 16V *ECV*	E	1679	MHA,MHA-160	M			05/97 ▸ 12/01	1303374	●**820565**	82	Y
Ranger (99>2002)										
2.5 D,2.5 TD	D	2500	25D,25TD	M			10/99 ▸ 01/02	4188498	●**820793**	82	Y
Ranger (2002>)										
2.5 TD *2AW8B1*	D	2496	4GC	M			01/02 ▸ 09/06	4188498	●**820793**	82	Y
Scorpio (85>92)										
1800 *GAE*	E	1796	REC	M		☞10	03/85 ▸ 04/87	1635905	**819853**	87	Y
2000,2000 i *GAE*	E	1993	NEL, NRA	M		☞10	03/85 ▸ 10/89	1635905	**819853**	87	Y
2000,2000 i	E	1993	NRA, NEL	A		☞10	03/85 ▸ 10/89	1635905	**819853**	87	Y
2000,2000 i *GAE, GFK*	E	1998	N9B, N8B	M		☞1	11/89 ▸ 01/92	6994257	**820068**	88	Y
2000,2000 i *GAE*	E	1998	N9B, N8B	A		☞1	11/89 ▸ 01/92	6994257	**820068**	88	Y
2400 i	E	2394	ARD, ARC	M			11/86 ▸ 01/92	6588962	**820051**	88	Y
2400 i	E	2394	ARC, ARD	A			11/86 ▸ 01/92	6588962	**820051**	88	Y
2800 i	E	2792	PRE	M			03/85 ▸ 10/86	6058444	**819848**	92	Y
2800 i	E	2792	PRE	M			03/85 ▸ 10/86	0801587	**819847**	87	Y
2800 i	E	2792	PRE	A			03/85 ▸ 10/86	0801587	**819847**	87	Y
2800 i	E	2792	PRE	A			03/85 ▸ 10/86	6058444	**819848**	92	Y
2800 i	E	2792	PRE	A			03/85 ▸ 10/86	6106381	**820525**	80	Y
2800 i	E	2792	PRE	M			03/85 ▸ 10/86	6106381	**820525**	80	Y
2900 i	E	2933	BRD, BRC	M			11/86 ▸ 01/92	6588962	**820051**	88	Y
2900 i	E	2933	BRC, BRD	A			11/86 ▸ 01/92	6588962	**820051**	88	Y
2.9 24V	E	2935	B0A	A			05/91 ▸ 01/92	6588962	**820051**	88	Y
2500 D,2500 TD	D	2499	SFA, STR	M		☞8	11/85 ▸ 1990	6182480	**819839**	83	Y
Scorpio (92>94)										
2.0,2.0 i *GFK, GNM, GAE*	E	1998	N9F, N8B, N9B	M		☞1	02/92 ▸ 10/94	6994257	**820068**	88	Y
2.0,2.0 i *GAE, GFK*	E	1998	N9F, N8B, N9B	A		☞1	02/92 ▸ 10/94	6994257	**820068**	88	Y
2.4 i *GFK, GNM, GAE*	E	2394	ARD	M			02/92 ▸ 10/94	6588962	**820051**	88	Y
2.4 i *GAE, GFK*	E	2394	ARD	A			02/92 ▸ 10/94	6588962	**820051**	88	Y
2.9 i *GFE, GFK, GNM, GAE*	E	2933	BRF	M			02/92 ▸ 10/94	6588962	**820051**	88	Y
2.9 i *GFK, GNM*	E	2933	BRF	A			02/92 ▸ 10/94	6588962	**820051**	88	Y
2.5 TD *GFK, GNM, GAE*	D	2499	SFA	M		☞8	02/92 ▸ 09/93	6182480	**819839**	83	Y

• **New** Nouveau **Nuevo** Novo **Nuovo** Nieuw **Neu** Yeni Новый Nou

			CC		AC			OE	Valeo	(°)C		
FORD (.../...)												
Scorpio (92>94) (.../...)												
2.5 TD	*GFK, GNM, GAE*	D	2500	SCB	M		☞1	09/93 ▸ 10/94	7072643	**820059**	80	Y
Scorpio (94>98)												
2.0 i,2.0 i 16V	*GFR, GNR*	E	1998	NSD, N3A, NSE	M		☞1	10/94 ▸	6994257	**820068**	88	Y
2.0 i 16V	*GFR, GNR*	E	1998	N3A	A		☞1	10/94 ▸	6994257	**820068**	88	Y
2.3 i 16V	*GFR, GNR*	E	2295	Y5A	M		☞1	05/96 ▸	6994257	**820068**	88	Y
2.3 i 16V	*GFR, GNR*	E	2295	Y5A	A		☞1	05/96 ▸	6994257	**820068**	88	Y
2.9 i	*GFR, GNR*	E	2933	BRF	M			10/94 ▸ 08/96	6588962	**820051**	88	Y
2.9 i	*GFR, GNR*	E	2933	BRF	A			10/94 ▸ 08/96	6588962	**820051**	88	Y
2.9 i 24V	*GFR, GNR*	E	2935	B0B	A			10/94 ▸	7334678	**820051**	88	Y
2.5 TD	*GFR, GNR*	D	2500	SCD, SCC	M		☞1	10/94 ▸	7072643	**820059**	80	Y
Sierra (82>86)												
1.3		E	1294	JCT	M		☞10	08/82 ▸ 1985	6100630	**819854**	92	Y
1.3		E	1294	JCT	M		☞10	08/84 ▸ 1985	1635905	**819853**	87	Y
1.6,1600		E	1593	LCT, LCS	M		☞10	08/82 ▸ 1986	6100630	**819854**	92	Y
1.6,1600		E	1593	LCT, LCS	M		☞10	08/82 ▸ 1986	1635905	**819853**	87	Y
1.6		E	1593	LCT	A		☞10	08/82 ▸ 1984	1635905	**819853**	87	Y
1.6		E	1593	LCT	A		☞10	08/82 ▸ 1984	6100630	**819854**	92	Y
1600		E	1597	LSD	M		☞10	10/84 ▸ 12/86	1635905	**819853**	87	Y
1600		E	1597	LSD	M		☞10	10/84 ▸ 12/86	6100629	**819854**	92	Y
1.6		E	1597	LSE	A		☞10	10/84 ▸ 1986	1635905	**819853**	87	Y
1.6		E	1597	LSE	A		☞10	10/84 ▸ 1986	6100629	**819854**	92	Y
1.6,1600		E	1597	LSD	M		☞10	01/84 ▸ 12/86	6100630	**819854**	92	Y
1.6,1600		E	1597	LSD	M		☞10	08/84 ▸ 12/86	1635905	**819853**	87	Y
1.8,1800		E	1796	REB, RED	M		☞10	10/84 ▸ 12/86	1635905	**819853**	87	Y
1.8,1800		E	1796	REB, RED	M		☞10	10/84 ▸ 12/86	6100629	**819854**	92	Y
1800		E	1796	REB	A		☞10	10/84 ▸ 12/86	1635905	**819853**	87	Y
1800		E	1796	REB	A		☞10	10/84 ▸ 12/86	6100629	**819854**	92	Y
2.0,2000		E	1993	NET	M		☞10	08/82 ▸ 12/86	6100630	**819854**	92	Y
2.0,2000		E	1993	NET	M		☞10	08/84 ▸ 12/86	1635905	**819853**	87	Y
2.0		E	1993	NET	A		☞10	08/82 ▸ 12/86	6100630	**819854**	92	Y
2.0,2.0 i		E	1993	NRB, NET	A		☞10	08/84 ▸ 12/86	1635905	**819853**	87	Y
2.0,2.0 i,2000 i		E	1993	NRB, NET, N5	M		☞10	08/82 ▸ 1987	1635905	**819853**	87	Y
2.0		E	1993	N5	M		☞4	08/86 ▸ 1987	6542383	**820069**	82	Y
2.0		E	1998	NYT	M			08/82 ▸ 1986	0801587	**819847**	87	Y
2.0		E	1998	NYT	M			08/82 ▸ 1986	6058444	**819848**	92	Y
2.0		E	1998	NYT	M			08/82 ▸ 1986	6106381	**820525**	80	Y
2.3,2300		E	2294	YY	A			08/82 ▸ 1986	0801587	**819847**	87	Y
2.3,2300		E	2294	YY	A			08/82 ▸ 1986	6058444	**819848**	92	Y
2.3,2300		E	2294	YY	M			08/82 ▸ 1986	0801587	**819847**	87	Y
2.3,2300		E	2294	YY	M			08/82 ▸ 1986	6058444	**819848**	92	Y
2.3,2300		E	2294	YY	A			08/82 ▸ 1986	6106381	**820525**	80	Y
2.3,2300		E	2294	YY	M			08/82 ▸ 1986	6106381	**820525**	80	Y
2.8,2.8 i		E	2792	PR6, PRG, PR7	M			01/83 ▸ 1986	6058444	**819848**	92	Y
2.8,2.8 i		E	2792	PR7, PR6, PRG	M			01/83 ▸ 1986	0801587	**819847**	87	Y
2.8,2.8 i		E	2792	PR6,PR7,PRG	M			01/83 ▸ 12/86	6106381	**820525**	80	Y
2.3 D,2300 D		D	2304	YTT	M		☞8	10/82 ▸ 12/86	1612191	**819839**	83	Y
Sierra (87>93)												
1.6		E	1597	LSE	M		☞10	01/87 ▸ 1993	6100629	**819854**	92	Y
1.6		E	1597	LSE	M		☞10	01/87 ▸ 1993	1635905	**819853**	87	Y
1.6 i		E	1597	L6B	M		☞1	05/89 ▸ 12/92	6994257	**820068**	88	Y
1.8		E	1769	R2A	M		☞10	07/88 ▸ 1993	1635905	**819853**	87	Y
1.8		E	1769	R2A	M		☞10	07/88 ▸ 1993	6100629	**819854**	92	Y
1.8		E	1769	R2A	A		☞10	07/88 ▸ 1993	1635905	**819853**	87	Y
1.8		E	1769	R2A	A		☞10	07/88 ▸ 1993	6100629	**819854**	92	Y
1.8		E	1796	RED	M		☞10	01/87 ▸ 1993	6100629	**819854**	92	Y
1.8		E	1796	RED	M		☞10	01/87 ▸ 1993	1635905	**819853**	87	Y
1.8		E	1796	RED	A		☞10	01/87 ▸ 1989	6100629	**819854**	92	Y
1.8		E	1796	RED	A		☞10	01/87 ▸ 1989	1635905	**819853**	87	Y
2.0,2.0 i		E	1993	NES, N5, N4A	M		☞10	01/87 ▸ 02/90	1635905	**819853**	87	Y
2.0,2.0 i		E	1993	N5, NES	M		☞10	01/87 ▸ 1990	6100630	**819854**	92	Y
2.0 i		E	1993	N5D, N5C, N5	M		☞4	02/90 ▸ 1993	6542383	**820069**	82	Y

• **New** Nouveau **Nuevo** Novo **Nuovo** Nieuw **Neu** Yeni Новый Nou

Type Ctr.		cc			AC			OE	Valeo	(°)C	
FORD (.../...)											
Sierra (87>93) (.../...)											
2.0	E	1993	NES	A		☞10	01/87 ▸ 1990	6100629	**819854**	92	Y
2.0,2.0 i	E	1993	N4A, NES	A		☞10	01/87 ▸ 1990	1635905	**819853**	87	Y
2.0,2.0 i	E	1998	N9A, N9C, N8A	M		☞1	07/88 ▸ 01/93	6994257	**820068**	88	Y
2.0 i	E	1998	N9A, N9C	A		☞1	07/88 ▸ 1993	6994257	**820068**	88	Y
2.8 i,2800 i	E	2792	PR6, PRG, PR7	M			01/87 ▸ 01/93	0801587	**819847**	87	Y
2.8 i,2800 i	E	2792	PR6, PRG, PR7	M			01/87 ▸ 01/93	6058444	**819848**	92	Y
2.8 i,2800 i	E	2792	PR6,PR7,PRG	M			01/87 ▸ 01/93	6106381	**820525**	80	Y
2.9 i	E	2935	B4A, B4B	M			06/88 ▸ 1993	6588962	**820051**	88	Y
1.8 TD	D	1753	RFA,RFB	M			01/90 ▸ 01/93	1086282	**820475**	88	Y
2.3 D	D	2304	YTR	M		☞8	01/87 ▸ 1990	1612191	**819839**	83	Y
S-Max											
1.8 TDCi	D	1753	1.8 TC LYNX,1.8 TCD LYNX	M			04/06 ▸ 06/10	1086282	**820475**	88	Y
2.0 TDCi 16V	D	1997	2.0 DURATORQ	M			04/06 ▸ 06/10	1086282	**820475**	88	Y
2.0 TDCi 16V	D	1998	2.0DI DURATORQ	M			04/06 ▸	1086282	**820475**	88	Y
Taunus											
1600	E	1592	LCJ, LEE, LER	M		☞10	02/76 ▸ 07/82	6100629	**819854**	92	Y
1600	E	1592	LCJ, LEE	A		☞10	02/76 ▸ 07/82	6100629	**819854**	92	Y
2000	E	1993	NEO	M		☞10	02/76 ▸ 07/82	6100629	**819854**	92	Y
2000	E	1993	NEO	A		☞10	02/76 ▸ 07/82	6100629	**819854**	92	Y
2000	E	1998	NX	M			07/79 ▸ 07/82	0801587	**819847**	87	Y
2000	E	1998	NX	M			07/79 ▸ 07/82	6058444	**819848**	92	Y
2000	E	1998	NX	A			02/76 ▸ 07/82	0801587	**819847**	87	Y
2000	E	1998	NX	A			02/76 ▸ 07/82	6058444	**819848**	92	Y
2000	E	1998	NX	A			02/76 ▸ 07/82	6106381	**820525**	80	Y
2000	E	1998	NX	M			07/79 ▸ 07/82	6106381	**820525**	80	Y
2300	E	2293	VY	A			02/76 ▸ 07/82	0801587	**819847**	87	Y
2300	E	2293	VY	A			02/76 ▸ 07/82	6058444	**819848**	92	Y
2300	E	2293	VY	A			02/76 ▸ 07/82	6106381	**820525**	80	Y
2300	E	2293	VY	M			02/76 ▸ 07/82	6106381	**820525**	80	Y
FORD											
Courrier (91>96)											
1.8 D	D	1753	RTC,RTD	M			08/91 ▸ 09/96	1086282	**820475**	88	Y
Courrier (96>)											
1.6 i *J3S*	E	1596	ZL16	M			07/99 ▸	6866389	**820051**	88	Y
1.6 i *J3S*	E	1596	ZL16	M			07/99 ▸	1001993	**820547**	92	Y
1.8 D *J3SC, J5SRTJ*	D	1753	RTJ	M			10/96 ▸ 09/02	1086282	**820475**	88	Y
P100 Pick-up											
2.0 *PAA/AA/AB, PAB/AA/AB, PAC/AA/AB PAD/AA/AB*	E	1993	NAE	M		☞10	01/88 ▸	1635905	**819853**	87	Y
1.8 TD *PABBA, PACBB, PABBB PACBA, PAABB, PADBB PAABA, PADBA*	D	1753	RFA	M			02/89 ▸ 05/93	1086282	**820475**	88	Y
Tourneo Connect (2002>)											
1.8 i 16V	E	1796	EYPA	M			05/02 ▸	1001993	**820547**	92	Y
1.8 TDCi,1.8 TDdi	D	1753	D18DI,D18TCI	M			05/02 ▸	1086282	**820475**	88	Y
Transit (78>85)											
1.6 *VAA/KS/VS, VFAZ, VCA/KS/VS*	E	1593	LAT	M		☞10	01/78 ▸ 10/85	1635905	**819853**	87	Y
1.6 *VAA/KS/VS, VFAZ, VCA/KS/VS*	E	1593	LAT	M		☞10	01/78 ▸ 10/85	6100629	**819854**	92	Y
2.0 *VFL/KL/KS/VS/Z, VJL/KS/VS/Z, VML/KL VL/Z, VPL/KL/VL, VUL/KL/VL*	E	1993	NAV	M		☞10	01/78 ▸ 12/85	6100629	**819854**	92	Y
2.0 *VFL/KL/KS/VS/Z, VJL/KS/VS/Z, VML/KL VL/Z, VPL/KL/VL, VUL/KL/VL*	E	1993	NAV	M		☞10	01/78 ▸ 12/85	1635905	**819853**	87	Y
Transit (86>91)											
1.6 *TBAA, TBCA, TAA/A*	E	1593	LAT	M		☞10	10/85 ▸ 12/91	1635905	**819853**	87	Y

• **New** Nouveau **Nuevo** Novo **Nuovo** Nieuw **Neu** Yeni Новый Nou

Type Ctr.		cc		AC		2.3	OE	Valeo	(°)C	
FORD (.../...)										
Transit (86>91) (.../...)										
2.0,2.0 i *TBCB, TDAB, TDFB, TEAB TBA/B, TFAB, TGAB, TJBB TEB/B/E*	E	1993	NAT, N6T	M		☞10	10/85 ▸ 12/91	1635905	**819853**	87	Y
2.5 D	D	2496	4AB	M		☞8	10/85 ▸ 09/88	6129739	**819864**	82	Y
2.5 D	D	2496	4BC,4CA	M			10/88 ▸ 12/91	1658103	**820137**	88	Y
Transit (91>92)										
2.5 D	D	2496	4BC,4CA	M			08/91 ▸ 12/91	1086282	**820475**	88	Y
Transit (92>95)										
2.0,2.0 i *EAA/AAS/BAS, EBCBBS, EBA AAS/ADS/AFS, EEBAAS, ECA AAS/BAS, EGCAAS, EHBAAL EM, EFD/AAL/BAL*	E	1993	NBA, NCA	M		☞10	06/91 ▸ 08/94	1635905	**819853**	87	Y
2.9 i V6 *EJBVDS*	E	2933	BRT	M		☞10	08/91 ▸ 08/94	1635905	**819853**	87	Y
2.5 D *EAACAS*	D	2496	4BC	M		☞10	06/91 ▸ 08/94	1635905	**819853**	87	Y
2.5 D,2.5 TD *EGCCAS, EFBCAL, EHBCAL EBDCDS, EBDCBS, EBBCDS EBBCFS, EBBCAS, EDBCAS ECACAS*	D	2496	4BC,4GA	M			08/91 ▸ 08/94	1658103	**820137**	88	Y
2.5 D,2.5 TD *EBBEDS, EHBENL, EHBEML EJBEML, EEBFAS, EHBFNL EBDEBS, EBBEFS, EHEFAL EDBEAS, EDDEMS, EJBFAL EJBENE, EBBEAS, EEAFMS EHBFML, EEBEAS, EEBFDS EEBEDS, EFBEAL, EJBFML EJBFME, EJBEME, EJBEAL EEAEMS, EHBFAL, EJBFNE EHBEAL*	D	2496	4DA,4EA	M			08/91 ▸ 08/94	1086282	**820475**	88	Y
Transit (95>99)										
2.0 i GPL	G	1998	NSH	M		☞1	09/94 ▸ 12/99	6994257	**820068**	88	Y
2.0 i	E	1998	NSG, NSF	M		☞1	09/94 ▸ 12/99	6994257	**820068**	88	Y
2.5 TD	D	2496	4GA,4GB,4GC,4GD,4GE	A			09/94 ▸ 12/99	1086282	**820475**	88	Y
2.5 D,2.5 TD *EFB3AL, EHDSNL, EEBVMS*	D	2496	4EB,4EC,4ED,4FA,4FB,4FC,4FD 4GA,4GB,4GC,4GD,4GE,4HA,4HB 4HC	M			09/94 ▸ 12/99	1086282	**820475**	88	Y
Transit (2000>)										
2.3 i GPL 16V	G	2295	E5FC	M		☞1	01/00 ▸	6994257	**820068**	88	Y
2.3 i 16V	E	2295	E5FA	M		☞1	01/00 ▸	6994257	**820068**	88	Y
2.0 TDci,2.0 TDdi *FAE/YAB/YD3, FAF/YAB/YD3 FM, FAG/YAB/YD3*	D	1998	FIFA, F3FA, D3FA-E3, ABFA	M		☞8	08/00 ▸	1096283	**820542**	88	Y
2.4 TDCi,2.4 TDI,2.4 TDdi *FBY, FA, F/, FAB/Y/YD2 YD4/YF4, FAC/Y/YD2/YD4 YF4, FD, FM, FAD/Y/YD2 YD4/YF4, FMA/Y/YD2/YD4 YF4, FMB/Y/YD2/YD4/YF4 FMC//Y/YD2/YD4/YF4, FMD Y/YD2/YD4/YF4, FNB/J/JD2 JD4/JF4, FNC/J/JD2/JD4 JF4, FND/J/JD2/JD4/JF4*	D	2402	D4FA, D2FA, DOFE, F4FA, H9FA FXFA	M		☞8	01/00 ▸	1096283	**820542**	88	Y
Transit (2006>)										
2.2 TDCi 110,2.2 TDCi 130 *FAE/6P8/6QV/6QW, FMF6QV* 2.2 TDCi 85 *FMG6QV, FAF/6P8/6QV/6QW*	D	2198	P8FA, QWFA, QWFB, QVFA	M		☞8	04/06 ▸	1096283	**820542**	88	Y
2.4 TDCi 100,2.4 TDCi 115,2.4 TDCi 120 2.4 TDCi 140	D	2402	PHFB, JXFB, PHFA, HPFB, JXFA H9FC	M		☞8	04/06 ▸	1096283	**820542**	88	Y
3.2 TDCi 20V	D	3199	3.2 DURATORQ,3.2 DURATORQ/F	M	+/-	☞8	08/07 ▸	1096283	**820542**	88	Y

• **New** Nouveau **Nuevo** Novo **Nuovo** Nieuw **Neu** Yeni Новый Nou

												(°)C	
FORD (.../...)													
Transit Connect (2002>2006)													
1.8 i 16V	*PT2EYP, PU2EYP*	E	1796	EYPA	M			05/02 ▸	1001993	**820547**	92	Y	
FORD USA													
Explorer													
4.0 i	*U34X, U32X, U22X, U24X*	E	3958	40EFI	A		☞1	01/90 ▸	6758566	**820478**	92	Y	
GALLOPER													
Galloper													
3.0 i V6	*V43, V23*	E	2972	G6A	M			02/99 ▸	2550033060	**819943**	88	Y	
3.0 i V6	*V43*	E	2972	G6A	A			02/99 ▸	2550033060	**819943**	88	Y	
Santamo													
2.0 i,2.0 i 16V	*N43, N33*	E	1997	I4-DOHC, I4-SOHC	M			11/98 ▸	2550033060	**819943**	88	Y	
HONDA													
Accord I (76>83)													
1600	*SJ/532/533/542/543/E82, SY/532/533 542/543*	E	1602	EL	M		☞4,8	08/80 ▸ 09/83	19300PB2023	**820044**	82	Y	
1600 1010976 ▸	*SJ/332/333/342/343/D82, SY/332/333 342/343*	E	1602	EL	A		☞4,8	08/79 ▸ 09/83	19300PB2023	**820044**	82	Y	
Accord II (83>85)													
1600	*AC/532/533/542/543*	E	1598	EZ	M		☞4,8	09/83 ▸ 09/85	19300PB2023	**820044**	82	Y	
1600	*AC/733/743*	E	1598	EZ	A		☞4,8	09/83 ▸ 09/85	19300PB2023	**820044**	82	Y	
1800	*AD/533/543/544*	E	1829	ET1	M		☞4,8	09/83 ▸ 09/85	19300PB2023	**820044**	82	Y	
1800	*AD/733/743/744*	E	1829	ET1	A		☞4,8	09/83 ▸ 09/85	19300PB2023	**820044**	82	Y	
Accord III (85>89)													
1.6	*CA/452/453*	E	1598	A16A1	M		☞4,8	10/85 ▸ 08/89	19300PB2023	**820044**	82	Y	
1.6	*CA/452/453*	E	1598	A16A1	M		☞4,8	10/85 ▸ 08/89	19300PB2817	**820544**	88	Y	
1.6	*CA/462/463*	E	1598	A16A1	A		☞4,8	10/85 ▸ 08/89	19300PB2023	**820044**	82	Y	
1.6	*CA/462/463*	E	1598	A16A1	A		☞4,8	10/85 ▸ 08/89	19300PB2817	**820544**	88	Y	
2.0,2.0 i	*CA/552/553/554/556/557 559*	E	1955	A20A3, A20A1-102, A20A4 A20A2	M		☞4,8	10/85 ▸ 08/89	19300PB2817	**820544**	88	Y	
2.0,2.0 i	*CA/552/553/554/556/557 558*	E	1955	A20A2, A20A3, A20A1-102 A20A4	M		☞4,8	10/85 ▸ 08/89	19300PB2023	**820044**	82	Y	
2.0,2.0 i	*CA/553/56/562/563/564/566 567/568*	E	1955	A20A4, A20A2, A20A1-104 A20A3	A		☞4,8	10/85 ▸ 08/89	19300PB2817	**820544**	88	Y	
2.0,2.0 i	*CA/553/56/562/563/564/566 567/568*	E	1955	A20A1-104, A20A2, A20A4 A20A3	A		☞4,8	10/85 ▸ 08/89	19300PB2023	**820044**	82	Y	
2.0 i 16V	*CA/555/559*	E	1958	B20A2, B20A8	M		☞4,8	02/87 ▸ 08/89	19300PB2816	**820544**	88	Y	
2.0 i 16V	*CA/555/559*	E	1958	B20A8, B20A2	M		☞4,8	02/87 ▸ 08/89	19300PB2023	**820044**	82	Y	
Accord IV (89>93)													
1.8	*CB/152/153*	E	1849	F18A2	M		☞4,7,9	09/89 ▸ 1993	19300P08003	**820076**	78	Y	
2.0,2.0 i 16V	*CB/352/353/354*	E	1997	F20A3, F20A8, F20A2, F20A5 F20A4	M		☞4,7,9	09/89 ▸ 1993	19300P08003	**820076**	78	Y	
2.0,2.0 i 16V	*CB/362/363/364*	E	1997	F20A5, F20A8, F20A4, F20A2 F20A3	A		☞4,7,9	09/89 ▸ 1993	19300P08003	**820076**	78	Y	
2.2 i 16V	*CB755*	E	2156	F22A3	M		☞4,7,9	09/89 ▸ 1993	19300P08003	**820076**	78	Y	
2.2 i 16V	*CB765*	E	2156	F22A3	A		☞4,7,9	09/89 ▸ 1993	19300P08003	**820076**	78	Y	
Accord V (93>95)													
1.8 i	*CC753, CC752*	E	1849	F18A3	M			07/93 ▸ 06/95	19301P08305	**820165**	78	Y	
1.8 i	*CC753, CC752*	E	1849	F18A3	M			07/93 ▸ 06/95	19301P08316	**820165**	78	Y	
2.0 i	*CC767, CC765, CC766*	E	1997	F20Z1	A			03/93 ▸ 06/95	19301P08305	**820165**	78	Y	
2.0 i	*CC755, CC754, CC756, CC757, CC751*	E	1997	F20Z1,F20Z2	M			03/93 ▸ 06/95	19301P08305	**820165**	78	Y	
2.3 i	*CC768*	E	2259	H23A3	A			07/93 ▸ 06/95	19301P08316	**820165**	78	Y	

• **New** Nouveau **Nuevo** Novo **Nuovo** Nieuw **Neu** Yeni Новый Nou

				CC			AC			OE	Valeo	(°)C	
HONDA (.../...)													
Accord Aerodeck (90>93) (.../...)													
2.2 i 16V	*CB974, CB874, CB875 CB975*	E	2156	F22A6,F22A7	M			07/91 ▸ 08/93	19301P08305		**820165**	78	Y
Accord Aerodeck (93>97)													
2.0 i	*CE283, CE282, CE285, CE286, CE288 CE287*	E	1997	F20B3	A			09/93 ▸ 12/97	19301P08305		**820165**	78	Y
2.0 i	*CE272, CE278, CE273, CE276, CE274 CE277, CE275*	E	1997	F20B3	M			09/93 ▸ 12/97	19301P08305		**820165**	78	Y
2.2 i	*CE188, CE185, CE181, CE187, CE184 CE186*	E	2156	F22B1,F22B4,F22B5	A			09/93 ▸ 12/97	19301P08305		**820165**	78	Y
2.2 i	*CE174, CE178, CE177, CE171, CE175 CE176*	E	2156	F22B1,F22B4,F22B5	M			09/93 ▸ 12/97	19301P08316		**820165**	78	Y
Accord coupé (91>93)													
2.0 i	*CC124, CC125*	E	1997	F20A7	A			07/91 ▸ 08/93	19301P08305		**820165**	78	Y
2.0 i	*CC114, CC115*	E	1997	F20A7	M			07/91 ▸ 08/93	19301P08305		**820165**	78	Y
Accord coupé (93>97)													
2.0 i	*CD924, CD926, CD925*	E	1997	F20B3	A			09/93 ▸ 09/97	19301P08316		**820165**	78	Y
2.0 i	*CD915, CD916, CD914*	E	1997	F20B3	M			09/93 ▸ 09/97	19301P08305		**820165**	78	Y
2.2 i	*CD726, CD724, CD725, CD723*	E	2156	F22B4,F22B5	A			09/93 ▸ 09/97	19301P08316		**820165**	78	Y
2.2 i	*CD713, CD715, CD716, CD714*	E	2156	F22B4,F22B5	M			09/93 ▸ 09/97	19301P08305		**820165**	78	Y
Accord coupé (97>2002)													
2.0 i	*CG425, CG426*	E	1997	F20B5	A			06/98 ▸ 06/02	19301P08316		**820165**	78	Y
2.0 i	*CG415, CG416*	E	1997	F20B5	M			06/98 ▸ 06/02	19301P08316		**820165**	78	Y
2.3 i	*CG325*	E	2254	F23A3	A			10/97 ▸ 06/99	19301P08316		**820165**	78	Y
2.3 i	*CG315*	E	2254	F23A3	M			10/97 ▸ 06/99	19301P08316		**820165**	78	Y
3.0 i V6	*CG225*	E	2997	J30A1	A		☞4,9	10/97 ▸ 06/02	19301P8CA11		**820514**	76	Y
Ballade													
1300 CVCC	*SS15*	E	1335	EJ	M		☞7,8	1980 ▸ 1983	19300PA0003		**819942**	82	Y
1500 CVCC	*ST15*	E	1488	EM	M		☞7,8	1980 ▸ 1983	19300PA0003		**819942**	82	Y
City													
1.2	*FA100, GA100, AA/100/120*	E	1238	ER, D12A	M		☞8	10/81 ▸	19300PB2813		**819874**	82	Y
1.2,1.2 Turbo 1.2 Turbo II	*FA100, GA100, AA/100/120 140*	E	1238	ER, D12A, ERT	M		☞4,8	10/81 ▸	19300PB2815		**820544**	88	Y
1.2	*AA100*	E	1238	ER	A		☞8	10/86 ▸	19300PB2813		**819874**	82	Y
1.2	*AA100*	E	1238	ER	A		☞4,8	10/86 ▸	19300PB2811		**820544**	88	Y
Civic I (72>83)													
1200	*SFA, SB/A/C/E*	E	1169	EB1	M		☞4,8	09/75 ▸ 07/79	19300611005		**820044**	82	Y
1200	*SBD, SFB*	E	1169	EB1	A		☞4,8	09/75 ▸ 07/79	19300611005		**820044**	82	Y
1300	*SP, SS552, SL/431/532, WC/452/552*	E	1335	EN1	M		☞7,8	08/79 ▸ 08/83	19300PA0003		**819942**	82	Y
1300	*SP, SS552, SL/431/532, WC/452/552*	E	1335	EN1	M		☞4,8	08/79 ▸ 08/83	19300692013		**820044**	82	Y
1300	*SS252, WC252, SL/232*	E	1335	EN1	A		☞4,8	08/79 ▸ 08/83	19300692013		**820044**	82	Y
1300	*SS252, WC252, SL/232*	E	1335	EN1	A		☞7,8	08/79 ▸ 08/83	19300PA0003		**819942**	82	Y
1500 CVCC	*102*	E	1488	ED	M		☞4,8	01/72 ▸ 08/79	19300657812		**820044**	82	Y
1500 CVCC	*104*	E	1488	ED	A		☞4,8	09/75 ▸ 08/79	19300657812		**820044**	82	Y
Civic II (83>87)													
1200	*AL431*	E	1169	ZA	M		☞4,7,9	09/83 ▸ 08/87	19300PE0024		**820076**	78	Y
1300	*AG532, AJ542*	E	1342	EV2	M		☞4,7,9	09/83 ▸ 08/87	19300PE0024		**820076**	78	Y
1300	*AG332, AJ342*	E	1342	EV2	A		☞4,7,9	09/83 ▸ 08/87	19300PE0024		**820076**	78	Y
1500,1500 i	*AK543, AH/532/533*	E	1488	EW3, EW2	M		☞4,7,9	09/83 ▸ 08/87	19300PE0024		**820076**	78	Y
1500	*AK343, AH/333/733*	E	1488	EW2	A		☞4,7,9	09/83 ▸ 08/87	19300PE0024		**820076**	78	Y
Civic III (87>91)													
1.2	*ED152, EC732*	E	1238	D12B1	M			09/87 ▸ 1991	19300PM3003		**820165**	78	Y
1.2	*ED152*	E	1238	D12B1	M			09/87 ▸ 1991	19300PM3004		**820165**	78	Y
1.3	*ED842*	E	1343	D13B1	A			09/87 ▸ 1991	19300PM3003		**820165**	78	Y
1.3	*EC832*	E	1343	D13B1,D13B2	M			09/87 ▸ 1991	19300PM3003		**820165**	78	Y
1.4	*ED262*	E	1396	D14A1	A			09/87 ▸ 12/89	19300PM3004		**820165**	78	Y

• **New** Nouveau **Nuevo** Novo **Nuovo** Nieuw **Neu** Yeni Новый Nou

				Type Ctr.		CC			AC			OE	Valeo	(°)C	
HONDA (.../...)															
Civic III (87>91) (.../...)															
1.4	*EC932, ED252*	E			1396	D14A1		M			09/87 ▸ 1991	19300PM3003	**820165**	78	Y
1.5 i	*ED365, ED364*	E			1493	D15B1,D15B2		A			09/87 ▸ 08/91	19300PM3004	**820165**	78	Y
1.5 i	*ED354, ED635, ED634, ED355*	E			1493	D15B1,D15B2		M			09/87 ▸ 08/91	19300PM3003	**820165**	78	Y
1.6 i 16V	*EE566*	E			1590	D16Z2		A			09/90 ▸ 08/91	19300PM3003	**820165**	78	Y
1.6 i 16V	*ED456, EE556*	E			1590	D16A6,D16A7,D16Z2		M			09/87 ▸ 08/91	19300PM3004	**820165**	78	Y
Civic IV (91>95)															
1.3	*EG333, EG332*	E			1343	D13B2		M			09/91 ▸ 09/95	19301P08305	**820165**	78	Y
1.5 i	*EJ223, EG865, EG864, EG444, EG445*	E			1493	D15B2,D15B7		A			09/91 ▸ 09/95	19301P08305	**820165**	78	Y
1.5 i	*EG854, EG436, EG856, EG435, EJ212 EJ213, EG434, EG855*	E			1493	D15B2,D15B7,D15Z1		M			09/91 ▸ 09/95	19301P08305	**820165**	78	Y
1.6 i	*EG548, EH968, EJ230, EH168*	E			1590	D16Z6,D16Z7,D16Z9		A			09/91 ▸ 09/95	19301P08305	**820165**	78	Y
1.6 i	*EJ113*	E			1590	D16Z9		M			09/91 ▸ 09/95	19301P08306	**820165**	78	Y
1.6 i	*EG959, EG639*	E			1595	B16A2		M			09/91 ▸ 09/95	19301P08305	**820165**	78	Y
Civic V (MA/MB) (95>2001)															
1.4 i	*MA/871/872/873/874/875/876/877, MB 273/274/275/276*	E			1396	D14A2, D14A5, D14A8, D14A7		M		☞9	01/95 ▸ 03/01	19301P1K307	**820195**	78	Y
1.4 i	*MA/882/883/884/885/886/887, MB/285 286*	E			1396	D14A2, D14A8		A		☞9	01/95 ▸ 03/01	19301P1K307	**820195**	78	Y
1.5 i	*MA/971/972/973/974, MB/373/374*	E			1493	D15Z3, D15Z8		M		☞9	01/95 ▸ 03/01	19301P1K307	**820195**	78	Y
1.6 i	*MB/172/173/174/175/176/177*	E			1590	D16Y2, D16Y3		M		☞9	01/95 ▸ 06/96	19301P1K307	**820195**	78	Y
1.6 i	*MB/182/183/184/185/485*	E			1590	D16Y3		A		☞9	01/95 ▸ 03/01	19301P1K307	**820195**	78	Y
1.6 i	*MB/476/477/485*	E			1595	D16B2		M		☞9	07/96 ▸ 03/01	19301P1K307	**820195**	78	Y
1.6 i	*MB/486/487*	E			1595	D16B2		A		☞9	07/96 ▸ 03/01	19301P1K307	**820195**	78	Y
2.0 TDi	*MB773*	D			1994	20T2N12		M			07/96 ▸ 03/01	19302P5TG01	●**820955**	92	N
Civic V (EJ/EK) (95>2001)															
1.4 i	*EJ944, EJ964, EJ943*	E			1396	D14A4		A			10/95 ▸ 03/01	19301P08316	**820165**	78	Y
1.4 i	*EJ933, EJ934, EJ954*	E			1396	D14A3,D14A4		M			10/95 ▸ 03/01	19301P08305	**820165**	78	Y
1.5 i	*EK346, EK366*	E			1493	D15Z6		A			10/95 ▸ 03/01	19301P08305	**820165**	78	Y
1.5 i	*EK336, EK356*	E			1493	D15Z6		M			10/95 ▸ 03/01	19301P08316	**820165**	78	Y
1.6 i	*EK146, EK167*	E			1590	D16Y5,D16Y8		A			10/95 ▸ 03/01	19301P08316	**820165**	78	Y
1.6 i	*EK157*	E			1590	D16Y8		M			10/95 ▸ 03/01	19301P08316	**820165**	78	Y
1.6 i	*EK456, EK436, EM1*	E			1595	B16A,B16A2		M			10/95 ▸ 03/01	19301P08316	**820165**	78	Y
1.6 i	*EM1, EK436, EK456*	E			1595	B16A,B16A2		M			10/95 ▸ 03/01	19301P08305	**820165**	78	Y
Civic (EP) (2001>)															
1.3 i	*ES956*	E			1339	LDA1-MF3		M			01/04 ▸ 12/05	19301PZA305	**820933**	84	Y
1.4 i 16V	*EP146, EU784, EU584 EP145, EU786, ES463*	E			1396	D14Z5,D14Z6		A			04/01 ▸ 09/03	19301PAA306	**820165**	78	Y
1.4 i 16V	*EP132, EU572, EU772 ES453, EU574, EU771 EP135, EP136, EU774 EP134, EU776*	E			1396	D14Z5,D14Z6		M			04/01 ▸ 09/03	19301PLC305	**820165**	78	Y
1.4 i	*ES956*	E			1396	LDA1-MF3		M			07/03 ▸ 01/04	19301PZA305	**820933**	84	Y
1.6 i VTEC 16V	*EP246, ES567, EP242 EP244, ES564, EP247 EU887, ES569, ES566 ES563, EP248, EU684 EU682, EU687, ES565 EU884, EP245, EU882*	E			1590	D16V1,D16W7		A			04/01 ▸ 09/03	19301PLC305	**820165**	78	Y
1.6 i VTEC 16V	*ES557, EP232, EU872 EU877, ES554, EU672 EU674, EP238, EU874 ES556, EP239, EP237 ES559, EU677, EP236 EP234, ES553, EP235 ES555*	E			1590	D16V1,D16W7		M			04/01 ▸ 09/03	19301PLC305	**820165**	78	Y
1.7 i 16V,1.7 i VTEC 16V	*EM223, EM229, EM228 EM225*	E			1668	D17A8,D17A9		A			04/01 ▸ 09/03	19301PAA306	**820165**	78	Y
1.7 i 16V,1.7 i VTEC 16V	*EM215, EM218, EM219 EM213*	E			1668	D17A8,D17A9		M			04/01 ▸ 09/03	19301PLC305	**820165**	78	Y

• **New** Nouveau **Nuevo** Novo **Nuovo** Nieuw **Neu** Yeni Новый Nou

			cc			AC			OE	Valeo	(°)C	
HONDA (.../...)												
Civic (EP) (2001>) (.../...)												
1.7 CTDi	*EP/432/435/438/439, EU 972/975/978*	D	1686	4EE2	M		☞4,8	04/02 ▸	19301PLZD00	**820152**	85	Y
Civic (FK/FD) (2006>)												
1.3 i-VTEC IMA	*FD362*	E	1339	LDA2-MF5	A			01/06 ▸	19301PZA305	**820933**	84	Y
1.4 i	*FK174*	E	1339	L13A7	M			01/06 ▸	19301PZA305	**820933**	84	Y
1.4 i	*FK184*	E	1339	L13A7	A			01/06 ▸	19301PZA305	**820933**	84	Y
2.2 i-CTDi 16V	*FN332, FK374, FN336 FK376, FN334, FK378*	D	2204	N22A1,N22A2,N22A2/F	M			01/06 ▸	19301RBD305	**820196**	78	Y
Civic Aerodeck (97>)												
1.4 i	*MB/873/874/875/876/877/878*	E	1396	D14A7, D14A8	M		☞9	09/97 ▸	19301P1K307	**820195**	78	Y
1.4 i	*MB/885/887*	E	1396	D14A7, D14A8	A		☞9	09/97 ▸	19301P1K307	**820195**	78	Y
1.4 i	*MB885, MB887*	E	1396	D14A7,D14A8	A			09/97 ▸ 03/01	19301PLC305	**820165**	78	Y
1.4 i	*MB876, MB878, MB874, MB873, MB877 MB875*	E	1396	D14A7,D14A8	M			09/97 ▸ 03/01	19301PLC305	**820165**	78	Y
1.5 i VTEC	*MB/974/975/976*	E	1493	D15Z8	M		☞9	09/97 ▸	19301P1K307	**820195**	78	Y
1.5 i VTEC	*MB976, MB975, MB974*	E	1493	D15Z8	M			09/97 ▸ 03/01	19301PLC305	**820165**	78	Y
1.6 i	*MC175*	E	1590	D16W4	M		☞9	09/97 ▸	19301P1K307	**820195**	78	Y
1.6 i	*MC184*	E	1590	D16W3	A		☞9	09/97 ▸	19301P1K307	**820195**	78	Y
1.6 i	*MC184*	E	1590	D16W3	A			09/97 ▸ 03/01	19301PLC305	**820165**	78	Y
1.6 i	*MC175*	E	1590	D16W4	M			09/97 ▸ 03/01	19301PLC305	**820165**	78	Y
1.6 i	*MC176*	E	1595	D16B2	M		☞9	09/97 ▸	19301P1K307	**820195**	78	Y
1.6 i	*MC186*	E	1595	D16B2	A		☞9	09/97 ▸	19301P1K307	**820195**	78	Y
1.6 i	*MC186*	E	1595	D16B2	A			09/97 ▸ 03/01	19301PLC305	**820165**	78	Y
1.6 i	*MC176*	E	1595	D16B2	M			09/97 ▸ 03/01	19301PLC305	**820165**	78	Y
1.8 i	*MC274*	E	1797	B18C4	M			09/97 ▸ 03/01	19301P08316	**820165**	78	Y
1.8 i	*MC274*	E	1797	B18C4	M			09/97 ▸ 03/01	19301P08305	**820165**	78	Y
2.0 iTD	*MC/374/375/377*	D	1994	20T2N,20T2R	M			04/98 ▸ 03/01	19302P5TG01	•**820955**	92	N
Civic Shuttle (83>87)												
1500	*AG652, AN552*	E	1488	EW2, EW2C	M		☞4,7,9	09/83 ▸ 08/87	19300PE0024	**820076**	78	Y
1500	*AN/352/752*	E	1488	EW2C	A		☞4,7,9	09/83 ▸ 08/87	19300PE0024	**820076**	78	Y
Civic Shuttle (87>)												
1.4	*EE182*	E	1396	D14A1	A			08/90 ▸ 09/91	19301P08305	**820165**	78	Y
1.4	*EE172*	E	1396	D14A1	M			08/90 ▸ 09/91	19301P08305	**820165**	78	Y
1.5 i	*EE285*	E	1493	D15B2	A			08/90 ▸ 09/91	19301P08305	**820165**	78	Y
1.5 i	*EE275*	E	1493	D15B2	M			08/90 ▸ 09/91	19301P08305	**820165**	78	Y
1.6 i 16V	*EE486*	E	1590	D16Z2	A			08/90 ▸ 1992	19301P08305	**820165**	78	Y
1.6 i 16V	*EE476*	E	1590	D16A6,D16A7,D16Z2	M			11/87 ▸ 1992	19301P08305	**820165**	78	Y
Concerto												
1.4	*HWHWL, HWLLZ*	E	1396	D14A1	A			10/89 ▸	19300PM3003	**820165**	78	Y
1.4	*HWHLL, HWHWL*	E	1396	D14A1	M			10/89 ▸	19300PM3004	**820165**	78	Y
1.5 i	*HWLPV, HWHWP*	E	1493	D15B2	A			10/89 ▸	19300PM3003	**820165**	78	Y
1.5 i	*HWHWP, HWLPT*	E	1493	D15B2	M			08/91 ▸ 09/95	19301P08306	**820165**	78	Y
1.6,1.6 i 16V	*HWMWW, HWZLN, HWMLW HWYWW, HWWLN, HWWWU HWYLM, HWYLW, HWWLU HWYWM, HWLYW*	E	1590	D16A8,D16A9,D16Z1,D16Z2,D16Z4	A			10/89 ▸	19300PM3004	**820165**	78	Y
1.6,1.6 i 16V	*HWYLM, HWYLW, HWWLN HWWWU, HWYWM, HWZWN HWYWW, HWWWN, HWWLU HWZLN, HWMWW, HWMLW*	E	1590	D16A8,D16A9,D16Z1,D16Z2	M			08/91 ▸ 09/94	19301P08305	**820165**	78	Y
CR-V (97>2002)												
2.0 i	*RD184, RD385, RD186, RD185*	E	1973	B20B,B20B3,B20Z1	A			01/99 ▸ 02/02	19301P08315	**820165**	78	Y
2.0 i	*RD375, RD176, RD174, RD173, RD175 RD172*	E	1973	B20B,B20Z1,B20Z3	M			01/99 ▸ 02/02	19301P08315	**820165**	78	Y
CR-V (2002>)												
2.2 iCTDi 16V	*RD976*	D	2204	N22A1	M			03/05 ▸	19301RBD305	**820196**	78	Y

• **New** Nouveau **Nuevo** Novo **Nuovo** Nieuw **Neu** Yeni Новый Nou

Type Ctr.			CC			AC		2 3	OE	Valeo	(°)C		
HONDA (.../...)													
CRX (AF/AS) (83>88)													
1.5 i	*AF532*	E	1488	EW3	M		☞4,7,9	09/83 ▸ 08/87	19300PE0024	**820076**	78	Y
CRX (EE/ED) (87>92)													
1.6 i 16V	*ED936, ED937*	E	1590	D16A6,D16A7,D16A8,D16A9,D16Z5	M			09/87 ▸ 02/92	19300PM3004	**820165**	78	Y
1.6 i 16V	*ED936, ED937*	E	1590	D16A6,D16A7,D16A8,D16A9,D16Z5	M			09/87 ▸ 02/92	19300PM3003	**820165**	78	Y
1.6 i 16V	*EE838*	E	1595	B16A1	M			08/89 ▸ 02/92	19300PM3004	**820165**	78	Y
1.6 i 16V	*EE838*	E	1595	B16A1	M			08/89 ▸ 02/92	19300PM3003	**820165**	78	Y
CRX (EG/EH) (92>98)													
1.6 i	*EH628, EH626*	E	1590	D16Y8,D16Z6,D16Z7	A			03/92 ▸ 12/98	19301P08305	**820165**	78	Y
1.6 i	*EH618, EH616*	E	1590	D16Y8,D16Z6,D16Z7	M			03/92 ▸ 12/98	19301P08305	**820165**	78	Y
1.6 i	*EG217, EG219*	E	1595	B16A2	M			03/92 ▸ 12/98	19301P08305	**820165**	78	Y
FR-V													
2.2 i-CDTi	*BE572*	D	2204	N22A1	M			07/05 ▸	19301RBD305	**820196**	78	Y
HR-V													
1.6 i 16V	*GH144, GH145, GH483 GH385, GH245, GH486 GH386, GH485, GH244*	E	1590	D16W1	A			10/98 ▸ 09/05	19301P08315	**820165**	78	Y
1.6 i 16V,1.6 i VTEC 16V	*GH477, GH135, GH476 GH235, GH238, GH478 GH475, GH134, GH473 GH237, GH234, GH376 GH375*	E	1590	D16W1,D16W5	M			10/98 ▸ 09/05	19301P08316	**820165**	78	Y
Insight													
1.0 i VTEC	*ZE135*	E	995	ECA1	M			03/00 ▸	19301PHM305	**820549**	88	Y
Integra (DA) (86>93)													
1.5	*DA472*	E	1493	D15A1	M		☞4,7,9	03/85 ▸ 11/89	19300PE0024	**820076**	78	Y
1.5	*DA482*	E	1493	D15A1	A		☞4,7,9	03/85 ▸ 11/89	19300PE0024	**820076**	78	Y
1.6 i 16V	*DA/175/335*	E	1590	D16A2, D16A3	M		☞4,7,9	03/85 ▸ 11/89	19300PE0024	**820076**	78	Y
1.6 i 16V	*DA345*	E	1590	D16A3	A		☞4,7,9	03/85 ▸ 1989	19300PE0024	**820076**	78	Y
Integra (DC) (97>)													
1.8 i 16V	*DC231*	E	1797	B18C6	M			11/97 ▸ 08/01	19301P08316	**820165**	78	Y
Jazz (81>86)													
1.1	*AA432*	E	1100	ER3	M		☞8	02/84 ▸ 1986	19300PB2813	**819874**	82	Y
1.1	*AA432*	E	1100	ER3	M		☞4,8	02/84 ▸ 1986	19300PB2815	**820544**	88	Y
1.2	*AA/431/532*	E	1238	ER2, ER1	M		☞8	10/81 ▸ 1985	19300PB2813	**819874**	82	Y
1.2	*VF532, AA/431/532*	E	1238	ER1, ER2	M		☞4,8	10/81 ▸ 1986	19300PB2815	**820544**	88	Y
1.2	*AA332*	E	1238	ER2	A		☞8	02/84 ▸ 1985	19300PB2813	**819874**	82	Y
1.2	*AA332, VF332*	E	1238	ER2, ER4	A		☞4,8	02/84 ▸ 1986	19300PB2815	**820544**	88	Y
Jazz (2002>)													
1.2 i	*GD/573/575/577/578*	E	1243	L12A1	M			01/02 ▸ 07/02	19301PHM305	**820549**	88	Y
1.2 i	*GD/573/575/577/578*	E	1243	L12A1	M			01/02 ▸	19301PZA305	**820933**	84	Y
1.4 i	*GD/185/186/187/188*	E	1339	L13A1	A			01/02 ▸	19301PZA305	**820933**	84	Y
1.4 i	*GD/185/186/187/188*	E	1339	L13A1	A			01/02 ▸ 07/02	19301PHM305	**820549**	88	Y
1.4 i	*GD/173/175/176/177/178*	E	1339	L13A1	M			01/02 ▸	19301PZA305	**820933**	84	Y
1.4 i	*GD/173/175/176/177/178*	E	1339	L13A1	M			01/02 ▸ 07/02	19301PHM305	**820549**	88	Y
Legend (85>90)													
2.5	*HSSLP, HSZLP*	E	2493	C25A1,C25A2	A			11/85 ▸ 07/87	19300PH7004	**820165**	78	Y
2.5	*HSSLP, HSZLP*	E	2493	C25A1,C25A2	M			07/87 ▸ 09/87	19300PH7014	**820165**	78	Y
2.7 1350330 ▸	*KA454*	E	2675	C27A1, C27A2	M		☞4,7,9	▸ 07/89	19300PL2004	**820076**	78	Y
2.7 1451193 ▸	*KA/325/464*	E	2675	C27A1, C27A2	A		☞4,7,9	▸ 07/89	19300PL2004	**820076**	78	Y
2.7	*KA464, KA467, KA325, KA326, KA327*	E	2675	C27A1,C27A2	A			07/89 ▸ 09/90	19300PH7024	**820165**	78	Y

• **New** Nouveau **Nuevo** Novo **Nuovo** Nieuw **Neu** Yeni Новый Nou

			cc			AC			OE	Valeo	(°)C	
HONDA (.../...)												
Legend (85>90) (.../...)												
2.7	*HSELN, KA454, HSZLN, KA315*	E	2675	C27A1,C27A2	M			07/87 ▸	19300PH7014	**820165**	78	Y
Legend (90>96)												
3.2 i 24V	*KA765, KA825*	E	3206	C32A2	A			10/90 ▸ 06/92	19300PR7A02	**820196**	78	Y
3.2 i 24V	*KA815, KA755*	E	3206	C32A2	M			10/90 ▸ 06/92	19300PR7A02	**820196**	78	Y
Legend (96>2006)												
3.5 i V6 24V	*KA962*	E	3474	C35A2,C35A5	A			03/96 ▸	19301PR7305	**820196**	78	Y
Logo												
1.3 i	*GA345, GA343*	E	1343	D13B7	A			12/98 ▸ 04/01	19301P08315	**820165**	78	Y
1.3 i	*GA333, GA335*	E	1343	D13B7	M			12/98 ▸ 04/01	19301P08315	**820165**	78	Y
NSX (89>)												
3.0 V6 24V	*NA127, NA124, NA126 NA125, NA128*	E	2977	C30A4	A			03/89 ▸	19301PR7309	**820196**	78	Y
3.0 V6 24V	*NA117, NA115, NA116 NA118*	E	2977	C30A3	M			03/89 ▸	19301PR7305	**820196**	78	Y
3.2 V6 24V	*NA214, NA217*	E	3179	C32B2	M			09/99 ▸	19301PR7307	**820196**	78	Y
Odyssey												
2.2 i 16V	*RA182, RA181*	E	2156	F22B8	A			07/97 ▸ 12/00	19301P08305	**820165**	78	Y
Prelude (79>82)												
1.6 1400001 ▸ 1400000	*SN522*	E	1602	EL	M		☞4,8	08/79 ▸ 10/82	19300PB2023	**820044**	82	Y
1.6 ▸ 1400000	*SN322*	E	1602	EL	A		☞4,8	08/79 ▸	19300PB2023	**820044**	82	Y
Prelude II (82>87)												
1.8	*AB/522/523/524/527*	E	1829	ET, ET2	M		☞4,8	11/82 ▸ 09/87	19300PB2815	**820544**	88	Y
1.8	*AB/522/523/524/527*	E	1829	ET2, ET	M		☞4,8	11/82 ▸ 09/87	19300PB2023	**820044**	82	Y
1.8	*AB/722/723/727*	E	1829	ET, ET2	A		☞4,8	11/82 ▸ 09/87	19300PB2023	**820044**	82	Y
1.8 450001 ▸	*AB/722/723/727*	E	1829	ET2, ET	A		☞4,8	11/82 ▸ 09/87	19300PB2815	**820544**	88	Y
1.8 ▸ 450000	*AB/522/523/524/527*	E	1829	ET, ET2	M		☞8	11/82 ▸	19300PB2813	**819874**	82	Y
1.8 ▸ 450000	*AB/722/723/727*	E	1829	ET, ET2	A		☞8	11/82 ▸	19300PB2813	**819874**	82	Y
2.0 i 16V	*BA214*	E	1958	B20A1	M		☞8	09/85 ▸ 09/87	19300PB2813	**819874**	82	Y
2.0 i 16V	*BA214*	E	1958	B20A1	M		☞4,8	09/85 ▸ 09/87	19300PB2023	**820044**	82	Y
2.0 i 16V	*BA214*	E	1958	B20A1	M		☞4,8	09/85 ▸ 09/87	19300PB2815	**820544**	88	Y
Prelude III (84>92)												
2.0,2.0 i 16V	*BA/413/414/417/418*	E	1958	B20A9, B20A7, B20A4, B20A5 B20A3	M		☞4,8	09/84 ▸ 1992	19300PB2023	**820044**	82	Y
2.0,2.0 i 16V	*BA/423/424/427/428*	E	1958	B20A5, B20A7, B20A3, B20A4 B20A9	A		☞4,8	04/87 ▸ 1992	19300PB2023	**820044**	82	Y
2.0,2.0 i 16V 2900525 ▸	*BA/423/424/427/428*	E	1958	B20A4, B20A5, B20A7, B20A9 B20A3	A		☞4,8	09/87 ▸	19300PB2817	**820544**	88	Y
2.0,2.0 i 16V ▸ 2900524	*BA/413/414/417/418*	E	1958	B20A9, B20A5, B20A3, B20A7 B20A4	M		☞4,8	09/87 ▸	19300PB2817	**820544**	88	Y
Prelude IV (91>96)												
2.0 i 16V	*BB324*	E	1997	F20A4	A			10/91 ▸ 09/96	19301P08316	**820165**	78	Y
2.0 i 16V	*BB314*	E	1997	F20A4	M			10/91 ▸ 09/96	19301P08305	**820165**	78	Y
2.2 i 16V	*BB118, BB117*	E	2157	H22A2	M			07/92 ▸ 09/96	19301P13306	**820196**	78	Y
2.3 i 16V	*BB225, BB226*	E	2259	H23A2	A			10/91 ▸ 09/96	19301P08305	**820165**	78	Y
2.3 i 16V	*BB216, BB215*	E	2259	H23A2	M			10/91 ▸ 09/96	19301P08316	**820165**	78	Y
Prelude IV (96>2001)												
2.0 i 16V	*BB924*	E	1997	F20A4	A			10/96 ▸ 03/01	19301P08316	**820165**	78	Y
2.0 i 16V	*BB914*	E	1997	F20A4	M			10/96 ▸ 03/01	19301P08316	**820165**	78	Y
2.2 i	*BB524*	E	2156	F22A2	A			10/96 ▸ 09/01	19301P08316	**820165**	78	Y

• **New** Nouveau **Nuevo** Novo **Nuovo** Nieuw **Neu** Yeni Новый Nou

HONDA (.../...)

Prelude IV (96>2001) (.../...)

2.2 i	*BB514*	E	2156	F22A2	M			10/96 ▸ 09/00	19301P08305	**820165**	78	Y
2.2 i VTEC	*BB825, BB624*	E	2157	H22A5	A			10/96 ▸	19301PR7305	**820196**	78	Y
2.2 i VTEC	*BB614, BB615, BB815*	E	2157	H22A5	M			10/96 ▸	19301P13306	**820196**	78	Y

Quintet

1600	*SU/552/553*	E	1602	EL	M		☞4,8	01/80 ▸ 1984	19300PB2023	**820044**	82	Y
1600	*SU/352/353*	E	1602	EL	A		☞4,8	01/80 ▸ 1984	19300PB2023	**820044**	82	Y

Shuttle

2.2 i 16V	*RA184, RA187, RA182 RA183, RA181*	E	2156	F22B8	A			12/94 ▸ 02/98	19301P08305	**820165**	78	Y
2.2 i 16V	*RA183, RA184, RA181 RA187, RA182*	E	2156	F22B8	A			12/94 ▸ 02/98	19301P08316	**820165**	78	Y
2.3 i 16V	*RA382, RA381, RA383*	E	2254	F23A7	A			11/97 ▸ 10/00	19301P08316	**820165**	78	Y
2.3 i 16V	*RA381, RA382, RA383*	E	2254	F23A7	A			11/97 ▸ 10/00	19301P08305	**820165**	78	Y

Stream

1.7 i VTEC 16V	*RN174, RN177, RN173 RN178*	E	1668	D17A2	M			03/01 ▸ 09/05	19301PLC305	**820165**	78	Y
1.7 i VTEC 16V	*RN177, RN174, RN178 RN173*	E	1668	D17A2	M			03/01 ▸	19301PAA306	**820165**	78	Y

S2000

2.0 i VTEC 16V	*AP113*	E	1997	F20C2	M			03/04 ▸	19301P8EA10	**820165**	78	Y
2.0 i VTEC 16V	*AP113*	E	1997	F20C2	M			03/04 ▸ 06/09	19301PR7309	**820196**	78	Y

Today

546	*JW1*	E	546	EH	A			09/85 ▸	19300PH9812	**819943**	88	Y

HONDA

Acty

546	*VD/312/332*	E	546	EH	M			09/85 ▸ 1987	19300PH9812	**819943**	88	Y

HYUNDAI

Accent (94>99)

1.3 i	*VA2LA, VD2LA, VF2LA, VF3LA, VA3LA VD3LA*	E	1341	G4EH	A			07/94 ▸ 09/99	2550022200	**820192**	82	Y
1.3 i	*UF3LE, VF3LE, VA2LE, VA3LE, VD2LE UD3LE, VF2LE, VD3LE, UF2LE, UA3LE UD2LE, UA2LE*	E	1341	G4EH	M			07/94 ▸ 09/99	2550022200	**820192**	82	Y
1.5 i 12V	*UF2NA, VA3NA, UD3NA VF3NA, VF2NA, UA2NA UF3NA, VD2NA, VA2NA UA3NA, UD2NA, VD3NA*	E	1495	G4EK	A			07/94 ▸ 09/99	2550022200	**820192**	82	Y
1.5 i 12V	*VA3NE, VA2NE, UD2NE UA3NE, VD3NE, UA2NE UF2NE, VF2NE, VF3NE UD3NE, VD2NE, UF3NE*	E	1495	G4EK	M			07/94 ▸ 09/99	2550022200	**820192**	82	Y
1.5 i	*UA3.E, UD2.E, UD3.E, UF2.E, VA3.E VD2.E, VA2.E, VD3.E, VF2.E, UA2.E UF3.E, VF3.E*	E	1495	G4FK-99	M		☞4,9	07/94 ▸ 09/99	2550023010	**820193**	82	Y
1.5 i	*UF2.A, VD2.A, VA3.A, VF3.A, VD3.A VF2.A, UD2.A, UA3.A, VA2.A, UF3.A UD3.A, UA2.A*	E	1495	G4FK-99	A		☞4,9	07/94 ▸ 09/99	2550023010	**820193**	82	Y

Accent (99>2003)

1.3 i	*LCADJ*	E	1341	G4EH55, G4EH44, G4EH62	M		☞8	10/99 ▸	2550022600	**819846**	88	Y
1.3 i	*LCCDJ*	E	1341	G4EH55, G4EH62	A		☞8	10/99 ▸	2550022600	**819846**	88	Y
1.5 i 16V		E	1495	G4FK-102	M		☞4,9	10/99 ▸ 01/03	2550023010	**820193**	82	Y
1.5 i		E	1495	G4EK-90	M		☞8	10/99 ▸	2550022600	**819846**	88	Y

• **New** Nouveau **Nuevo** Novo **Nuovo** Nieuw **Neu** Yeni Новый Nou

			cc			AC			OE	Valeo	(°)C	
HYUNDAI (.../...)												
Accent (99>2003) (.../...)												
1.5 i 16V		E	1495	G4FK-102	A		☞4,9	10/99 ▸ 01/03	2550023010	**820193**	82	Y
1.5 i		E	1495	G4EK-90	A		☞8	10/99 ▸	2550022600	**819846**	88	Y
1.5 CRDi 12V		D	1493	D3-EA	M			04/02 ▸ 01/03	2550027000	**820555**	85	Y
Accent (2003>2004)												
1.6 i 16V		E	1599	G4ED	M		☞4,9	02/03 ▸	2550023010	**820193**	82	Y
1.6 i 16V		E	1599	G4ED	A		☞4,9	02/03 ▸	2550023010	**820193**	82	Y
1.5 CRDi 12V		D	1493	D3-EA	M			02/03 ▸	2550027000	**820555**	85	Y
Accent (2005>)												
1.4 i 16V		E	1399	G4EE	M		☞4,9	03/06 ▸	2550023010	**820193**	82	Y
1.4 i 16V		E	1399	G4EE	A		☞4,9	03/06 ▸	2550023010	**820193**	82	Y
1.6 i 16V		E	1599	G4	M		☞4,9	12/05 ▸	2550023010	**820193**	82	Y
1.6 i 16V		E	1599	G4	A		☞4,9	12/05 ▸	2550023010	**820193**	82	Y
1.5 CRDi 16V		D	1493	D3-EA81	M			12/05 ▸	2550027000	**820555**	85	Y
Amica												
1.0 i 12V	*MX5G1*	E	999	G4HC	M			02/00 ▸	2550002500	**820510**	82	Y
1.0 i 12V	*MX5G1*	E	999	G4HC	A			02/00 ▸	2550002500	**820510**	82	Y
Atos												
1.0 i 12V	*AC51G, AB51G*	E	999	G4HC	M			01/98 ▸ 06/04	2550002500	**820510**	82	Y
1.0 i 12V	*AC51G, AB51G*	E	999	G4HC	A			01/98 ▸ 06/04	2550002500	**820510**	82	Y
1.1 i 12V		E	1086	G4H46-D4, G4H46/59	M		☞7,8	07/04 ▸	2550002550	**820438**	82	Y
1.1 i 12V		E	1086	G4H46/59, G4H46-D4	A		☞7,8	07/04 ▸	2550002550	**820438**	82	Y
Atos Prime												
1.0 i 12V	*MX5G1*	E	999	G4HC	M			12/99 ▸ 06/01	2550002500	**820510**	82	Y
1.0 i 12V	*MX5G1*	E	999	G4HC	A			12/99 ▸ 06/01	2550002500	**820510**	82	Y
1.1 i 12V	*MX1A0*	E	1086	G4H46/59	M		☞7,8	07/04 ▸	2550002550	**820438**	82	Y
1.1 i 12V	*MX1A0*	E	1086	G4H46/59	A		☞7,8	07/04 ▸	2550002550	**820438**	82	Y
Atoz												
1.0 i 12V	*AC51G, AB51G*	E	999	G4HC	M			05/98 ▸	2550002500	**820510**	82	Y
1.0 i 12V	*AB51G, AC51G*	E	999	G4HC	A			05/98 ▸	2550002500	**820510**	82	Y
coupé (95>2001)												
1.6 i 16V	*JK31R, JG21R, JG31R*	E	1599	G4GRE6	M		☞4,9	05/96 ▸	2550023001	**820193**	82	Y
1.6 i 16V	*JK31R, JG31R*	E	1599	G4GRE6	A		☞4,9	05/96 ▸	2550023001	**820193**	82	Y
2.0 i 16V	*JG21F, JG31F, JK21F JK31F*	E	1975	G4GF	M		☞4,9	05/96 ▸	2550023001	**820193**	82	Y
2.0 i 16V	*JK31F, JG31F*	E	1975	G4GF	A		☞4,9	05/96 ▸	2550023001	**820193**	82	Y
coupé (2002>)												
1.6 i 16V	*GK*	E	1599	G4GRE2	M		☞4,9	01/02 ▸	2550023010	**820193**	82	Y
2.0 i 16V	*GK, GKDK*	E	1975	G4GCG-E4, G4GCG-141	M		☞4,9	01/02 ▸	2550023010	**820193**	82	Y
2.0 i 16V	*GKDK, GK*	E	1975	G4GCG-141, G4GCG-E4	A		☞4,9	01/02 ▸	2550023010	**820193**	82	Y
2.7 i V6 24V	*GKFZ*	E	2657	G6BA-G-167	A			01/02 ▸ 12/06	2550037200	●**820553**	82	Y
2.7 i V6 24V		E	2657	G6BA-G-167	M			01/02 ▸ 12/06	2550037200	●**820553**	82	Y
Elantra												
1.5		E	1468	G4DJJA	M			12/90 ▸ 05/95	2550024000	**820990**	82	Y
1.5		E	1468	G4DJJA	A			12/90 ▸ 05/95	2550024000	**820990**	82	Y
1.6 16V		E	1596	G4CR	M			10/93 ▸ 05/95	2550033050	**819943**	88	Y
1.6 16V		E	1596	G4CR	A			12/90 ▸ 05/95	2550033060	**819943**	88	Y
1.6 i,1.6 i 16V	*XDA, JW3RE, JF3RE, XDBUH XDAUH*	E	1599	G4GRE2, G4GR, G4EDG	M		☞4,9	06/00 ▸	2550023010	**820193**	82	Y
1.6 i,1.6 i 16V	*XDA, XDB, JW3RA, JF3RA*	E	1599	G4GRE2, G4EDG, G4GR	A		☞4,9	06/00 ▸	2550023010	**820193**	82	Y
1.8 i	*JF3ME, JW3ME*	E	1795	G4GM-128	M		☞4,9	05/95 ▸ 05/00	2550023001	**820193**	82	Y
1.8 i	*JW3MA, JF3MA*	E	1795	G4GM-128	A		☞4,9	05/95 ▸ 05/00	2550023001	**820193**	82	Y
1.8 i		E	1796	G4GM-132	M		☞4,9	06/00 ▸	2550023010	**820193**	82	Y
1.8 i		E	1796	G4GM-132	A		☞4,9	06/00 ▸	2550023010	**820193**	82	Y
1.8 16V		E	1836	G4CN	M			06/92 ▸ 01/95	2550011200	**820990**	82	Y
1.8 16V		E	1836	G4CN	M			06/92 ▸ 05/95	2550033060	**819943**	88	Y

• **New** Nouveau **Nuevo** Novo **Nuovo** Nieuw **Neu** Yeni Новый Nou

											(°)C	
HYUNDAI (.../...)												
Elantra (.../...)												
1.8 16V		E	1836	G4CN	A			06/92 ▸ 01/95	2550011200	**820990**	82	Y
1.8 16V		E	1836	G4CN	A			06/92 ▸ 05/95	2550033060	**819943**	88	Y
2.0 i,2.0 i 16V	*XDB, XDA, JF3FE, JW3FE*	E	1975	G4GCG-139, G4GCG-E4 G4GCG-141, G4GF	M		☞4,9	06/00 ▸	2550023010	**820193**	82	Y
2.0 i,2.0 i 16V	*XDB, XDA, JF3FA, JW3FA*	E	1975	G4GCG-139, G4GCG-141 G4GCG-E4, G4GF	A		☞4,9	06/00 ▸	2550023010	**820193**	82	Y
2.0 CRDi 16V	*XDBRM, XDARM*	D	1991	D4-EA	M			01/01 ▸	2550027000	**820555**	85	Y
Excel (86>89)												
1.3		E	1298	G4DGJE	M			1986 ▸	2550024000	**820990**	82	Y
1.3		E	1298	G4DGJE	M			11/86 ▸ 10/89	2550033050	**819943**	88	Y
1.5		E	1468	G4DJJAK	M			1986 ▸	2550024000	**820990**	82	Y
1.5		E	1468	G4DJJAK	M			11/86 ▸ 10/89	2550033050	**819943**	88	Y
1.5		E	1468	G4DJJAK	A			1986 ▸	2550024000	**820990**	82	Y
1.5		E	1468	G4DJJAK	A			11/86 ▸ 10/89	2550033050	**819943**	88	Y
Excel (89>94)												
1.3,1.3 i	*VF3ME, VA3ME, VD3ME*	E	1298	G4DGJA, G4DGJE	M			08/89 ▸ 10/94	2550024000	**820990**	82	Y
1.3,1.3 i	*VA3ME, VF3ME, VD3ME*	E	1298	G4DGJE, G4DGJA	M			08/89 ▸ 06/93	2550021220	**819943**	88	Y
1.5,1.5 i	*VF3JE, VD3JE, VA3JE*	E	1468	G4DJJA, G4DJJE	M			08/89 ▸ 06/93	2550021220	**819943**	88	Y
1.5,1.5 i	*VD3JE, VA3JE, VF3JE*	E	1468	G4DJJA, G4DJJE	M			08/89 ▸ 10/94	2550024000	**820990**	82	Y
1.5,1.5 i	*VF3JA, VA3JA, VD3JA*	E	1468	G4DJJA, G4DJJE	A			08/89 ▸ 06/93	2550021220	**819943**	88	Y
1.5,1.5 i	*VD3JA, VA3JA, VF3JA*	E	1468	G4DJJA, G4DJJE	A			08/89 ▸ 10/94	2550024000	**820990**	82	Y
Excel (94>)												
1.3	*VF3LA, VA2LA, VD2LA, VA3LA*	E	1341	G4EH	A			07/94 ▸ 09/99	2550022200	**820192**	82	Y
1.3	*VD2LE, VD3LE, VF3LE, VA3LE, VA2LE*	E	1341	G4EH	M			07/94 ▸ 09/99	2550022200	**820192**	82	Y
1.5 12V	*VA3NA, VD3NA, VF3NA*	E	1495	G4EK	A			07/94 ▸ 09/99	2550022200	**820192**	82	Y
1.5 12V	*VA3NE, VF3NE, VD3NE*	E	1495	G4EK	M			07/94 ▸ 09/99	2550022200	**820192**	82	Y
Galloper												
3.0 i V6	*904A*	E	2972	G6A	M			04/98 ▸	2550033060	**819943**	88	Y
3.0 i V6	*904A*	E	2972	G6A	A			04/98 ▸	2550033060	**819943**	88	Y
Getz (2002>2005)												
1.1 i 12V	*TBAMO, TBANO*	E	1086	G4H46	M			09/02 ▸ 08/05	2550002500	**820510**	82	Y
1.3 i 12V	*TBCNP, TBCMP*	E	1341	G4EH60	M		☞8	09/02 ▸ 03/04	2550022600	**819846**	88	Y
1.3 i 12V	*TBCNP, TBCMP*	E	1341	G4EH60	A		☞8	09/02 ▸ 03/04	2550022600	**819846**	88	Y
1.6 i 16V	*TB*	E	1599	G4GRE2	M		☞4,9	09/02 ▸ 12/03	2550023010	**820193**	82	Y
1.6 i 16V	*TB*	E	1599	G4GRE2	A		☞4,9	09/02 ▸ 12/03	2550023010	**820193**	82	Y
1.5 CRDi 12V	*TBGNT, TBGNS*	D	1493	D3-EA	M			03/03 ▸ 08/05	2550027000	**820555**	85	Y
Getz (2005>)												
1.4 i 16V		E	1399	G4EE	M		☞4,9	09/05 ▸	2550023001	**820193**	82	Y
1.4 i 16V		E	1399	G4EE	A		☞4,9	09/05 ▸	2550023001	**820193**	82	Y
1.6 i 16V		E	1599	GAGRE78	M		☞4,9	09/05 ▸	2550023001	**820193**	82	Y
1.6 i 16V		E	1599	GAGRE78	A		☞4,9	09/05 ▸	2550023001	**820193**	82	Y
1.5 CRDi 16V		D	1493	D3-EA65, D3-EA81	M			09/05 ▸	2550027000	**820555**	85	Y
Grandeur												
3.3 MPI V6 24V		E	3342	G6DB	A			04/05 ▸	255003C100	**820511**	82	Y
2.2 CRDi 16V	*TGBN*	D	2188	D4-EB	A			06/06 ▸	2550027000	**820555**	85	Y
i30												
1.6 CRDi 16V	*FDB5D*	D	1582	D4FB-L, D4FB	M			03/07 ▸	2550027000	**820555**	85	Y
1.6 CRDi 16V	*FDB5D*	D	1582	D4FB	A			03/07 ▸	2550027000	**820555**	85	Y
2.0 CRDi 16V	*FDB5D*	D	1991	D4-EA	M			03/07 ▸	2550027000	**820555**	85	Y
Lantra (90>95)												
1.5	*JF2JE*	E	1468	G4DJJA	M			12/90 ▸ 05/95	2550024000	**820990**	82	Y
1.5	*JF3JE*	E	1468	G4DJJE	M			12/90 ▸ 05/95	2550033060	**819943**	88	Y
1.5	*JF3JA*	E	1468	G4DJJE	A			12/90 ▸ 05/95	2550033060	**819943**	88	Y
1.5	*KF3JA, JF2RA*	E	1468	G4DJJE, G4DJJA	A			12/90 ▸ 05/95	2550024000	**820990**	82	Y
1.6 16V	*JF2RE, KF3RE, JF3RE*	E	1596	G4CR	M			12/90 ▸ 01/95	2550011200	**820990**	82	Y

• **New** Nouveau **Nuevo** Novo **Nuovo** Nieuw **Neu** Yeni Новый Nou

		E	1596	G4CR	M			12/90 ▸ 05/95	2550033060	**819943**	88	Y
1.6 16V	*KF3RA, JF3RA*	E	1596	G4CR	A			12/90 ▸ 01/95	2550011200	**820990**	82	Y
1.6 16V	*KF3RA, JF3RA*	E	1596	G4CR	A			01/91 ▸ 05/95	2550033060	**819943**	88	Y
1.8 16V	*JF3ME, KF3ME*	E	1836	G4CN	M			06/92 ▸ 05/95	2550033060	**819943**	88	Y
1.8 16V	*JF3MA, KF3MA*	E	1836	G4CN	A			06/92 ▸ 05/95	2550033060	**819943**	88	Y
Lantra (95>)												
1.5 i 12V	*JF2KE, JW2KE, JF3KE JW3KE*	E	1495	G4EK-88	M		☞4,8	09/96 ▸ 07/00	2550022250	**820481**	88	Y
1.5 i 12V	*JF2KA, JF3KA*	E	1495	G4EK-88	A		☞4,8	09/96 ▸ 07/00	2550022250	**820481**	88	Y
1.5 i 12V	*JF3KA, JF2KA*	E	1495	G4EK	A			09/96 ▸ 07/99	2550022200	**820192**	82	Y
1.5 i 12V	*JF2KE, JW2KE, JW3KE JF3KE*	E	1495	G4EK	M			09/96 ▸ 07/99	2550022200	**820192**	82	Y
1.6 i	*JW3RE, JF2RE, KF3RE, JF3RE, KW3RE JW2RE, KW2RE, KF2RE*	E	1599	G4GR	M		☞4,9	05/95 ▸ 07/00	2550023001	**820193**	82	Y
1.6 i	*JF3RA, KF3RA, JW3RA, JF2RA, KW2RA KW3RA, KF2RA, JW2RA*	E	1599	G4GR	A		☞4,9	05/95 ▸ 07/00	2550023001	**820193**	82	Y
1.8 i	*KF2MA, JF3ME, KF3ME, JW2ME, KW3ME JF2ME, JW3ME*	E	1795	G4GM-128	M		☞4,9	05/95 ▸ 07/00	2550023001	**820193**	82	Y
1.8 i	*JF3MA, JF2MA, KF2ME, KF3MA, JW3RA KW3RA*	E	1795	G4GM-128	A		☞4,9	05/95 ▸ 07/00	2550023001	**820193**	82	Y
2.0 i 16V	*KF3FE, JF3FE, JW3FE KW3FE*	E	1975	G4GF	M		☞4,9	06/97 ▸ 07/00	2550023001	**820193**	82	Y
2.0 i 16V	*KW3FA, JW3FA, KF3FA JF3FA*	E	1975	G4GF	A		☞4,9	06/97 ▸ 07/00	2550023001	**820193**	82	Y
1.9 D	*JW3ZE, JF3ZE, JW2ZE, JF2ZE*	D	1905	XUD9	M		☞4	09/97 ▸	2551129000	**819950**	83	Y
Matrix												
1.6 i	*FCWJ*	E	1599	G4GD, G4	M		☞4,9	05/01 ▸	2550023010	**820193**	82	Y
1.6 i	*FCWJ*	E	1599	G4GD	A		☞4,9	05/01 ▸	2550023010	**820193**	82	Y
1.8 i		E	1795	G4GB	M		☞4,9	05/01 ▸	2550023010	**820193**	82	Y
1.8 i		E	1795	G4GB	A		☞4,9	05/01 ▸	2550023010	**820193**	82	Y
1.5 CRDi,1.5 CRDi 12V	*FCANC, FCVLC, FCSN, FCAN*	D	1493	D3-EA81, D3-EA, D4FA	M			07/01 ▸	2550027000	**820555**	85	Y
1.5 CRDi	*FCSN*	D	1493	D4FA	A			02/05 ▸	2550027000	**820555**	85	Y
Pony (82>86)												
1200		E	1238	HYUN02	M			1982 ▸ 1986	2550011200	**820990**	82	Y
1400		E	1493	HYUN04	M			1982 ▸ 1986	2550011200	**820990**	82	Y
Pony (86>89)												
1.3		E	1298	G4DGJA	M			1986 ▸ 10/89	2550024000	**820990**	82	Y
1.3		E	1298	G4DGJA	M			11/86 ▸ 10/89	2550033050	**819943**	88	Y
1.5		E	1468	HYUN01	M			1986 ▸ 10/89	2550024000	**820990**	82	Y
1.5		E	1468	HYUN01	M			11/86 ▸ 10/89	2550033050	**819943**	88	Y
1.5		E	1468	HYUN01	A			1986 ▸ 10/89	2550024000	**820990**	82	Y
1.5		E	1468	HYUN01	A			11/86 ▸ 10/89	2550033050	**819943**	88	Y
Pony (89>94)												
1.3	*UD1ME, VD2ME, VD1MD, VD1ME, UDFME VD2MD, UD1MD, UF2MD, VF2MD, UA2ME UD2ME, VA2ME, UD2MD*	E	1298	G4DGJA	M			08/89 ▸ 10/94	2550011200	**820990**	82	Y
1.3,1.3 i	*VF3ME, UD3ME, VD3ME UA2ME, VD2ME, VD2MD VD1MD, UD2ME, UF2MD VD1ME, UD1ME, UDFME VA2ME, UD2MD, VF2MD UD1MD*	E	1298	G4DGJE, G4DGJA	M			08/89 ▸ 10/94	2550033060	**819943**	88	Y
1.5	*UD2JD, VD2JD, VD2JE, UD2JE, VF2JD VA2JD*	E	1468	G4DJJA	M			08/89 ▸ 10/94	2550011200	**820990**	82	Y
1.5,1.5 i	*VF3JE, VF2JD, VD3JE VD1JD, UD2JE, VD2JD UD1JE, VD2JE, UD1JD VA2JD, UD2JD, VA3JE UA3JE, UF3JE*	E	1468	G4DJJE, G4DJJA	M			08/89 ▸ 10/94	2550033060	**819943**	88	Y

• **New** Nouveau **Nuevo** Novo **Nuovo** Nieuw **Neu** Yeni Новый Nou

				Type Ctr.		CC		AC			OE	Valeo	(°)C
HYUNDAI (.../...)													
Pony (89>94) (.../...)													
1.5,1.5 i	*VD3JA, VD1JA, VD2JA, VA2JA, UD2JA, VF3JA, UD1JA*	E	1468		G4DJJE, G4DJJA	A			08/89 ▸ 10/94	2550033060	**819943**	88	Y
1.5	*VD2JA*	E	1468		G4DJJA	A			07/91 ▸ 10/94	2550011200	**820990**	82	Y
Pony (94>)													
1.3 i	*VF3LE, VA3LE, VA2LE, VD2LE, VD3LE, VF2LE*	E	1341		G4EH	M			07/94 ▸ 12/99	2550022200	**820192**	82	Y
1.5 i 12V	*VA3NA*	E	1495		G4EK	A			01/96 ▸ 12/99	2550022200	**820192**	82	Y
1.5 i 12V	*VD2NE, VA3NE*	E	1495		G4EK	M			09/94 ▸ 12/99	2550022200	**820192**	82	Y
Santa Fé													
2.7 i V6 24V	*SMS2K*	E	2657		G6BA-G-173	A			08/00 ▸ 02/06	2550027000	**820555**	85	Y
2.7 i V6 24V	*SMS2K*	E	2657		G6BA-G-173	A			08/00 ▸ 10/00	2550035531	●**820553**	82	Y
2.7 i V6 24V	*SMS2K*	E	2657		G6BA-G-173	A			10/00 ▸ 02/06	2550037200	●**820553**	82	Y
2.0 CRDi 16V	*U2NAC, SMV1G, SMV2G, SMU2N*	D	1991		D4-EA	M			12/00 ▸ 02/06	2550027000	**820555**	85	Y
2.0 CRDi 16V	*SMV1J, SMV2J, SMU2N*	D	1991		D4-EA	A			12/00 ▸ 02/06	2550027000	**820555**	85	Y
Santa Fé (2006>)													
2.2 CRDi 16V	*CMF7D, CMC5D*	D	2188		D4-EB	M			03/06 ▸ 10/06	2550027000	**820555**	85	Y
2.2 CRDi 16V	*CMF7D, CMC5D*	D	2188		D4-EB	A			03/06 ▸ 10/06	2550027000	**820555**	85	Y
2.7 i V6 24V		E	2656		G8-EA	A			03/06 ▸	2550035540	●**820553**	82	Y
2.7 i V6 24V		E	2656		G8-EA	M			03/06 ▸	2550035540	●**820553**	82	Y
Santamo													
2.0 i,2.0 i 16V	*N33, N43*	E	1997		I4-SOHC, I4-DOHC	M			07/98 ▸	2550033060	**819943**	88	Y
2.0 i,2.0 i 16V	*N43, N33*	E	1997		I4-DOHC, I4-SOHC	A			07/98 ▸	2550033060	**819943**	88	Y
Satellite													
2.4 i	*WWH7S*	E	2351		G4CSS	M			01/98 ▸	2550024000	**820990**	82	Y
2.4 i	*WWH7S*	E	2351		G4CSS	A			07/98 ▸	2550024000	**820990**	82	Y
S-Coupé													
1.5	*UE2JE*	E	1468		G4DJJA	M			03/90 ▸ 06/92	2550011200	**820990**	82	Y
1.5 i	*VE3JE, UE3JE*	E	1468		G4DJJE	M			03/90 ▸ 06/92	2550021220	**819943**	88	Y
1.5 i	*VE3JE, UE3JE*	E	1468		G4DJJE	M		☞4,8	03/90 ▸ 06/92	2550022250	**820481**	88	Y
1.5	*UE2JA*	E	1468		G4DJJA	A			03/90 ▸ 06/92	2550011200	**820990**	82	Y
1.5 i	*UE3JA, VE3JA*	E	1468		G4DJJE	A			03/90 ▸ 06/92	2550033060	**819943**	88	Y
1.5 i 12V,1.5 i Turbo	*VE3NE, VE2NE, UE3NE, UE2NE*	E	1495		G4EKET, G4EK-88	M		☞4,8	06/92 ▸ 05/96	2550022250	**820481**	88	Y
1.5 i 12V,1.5 i Turbo	*VE3NA, UE3NA, VE2NA, UE2NA*	E	1495		G4EKET, G4EK-88	A		☞4,8	06/92 ▸ 05/96	2550022250	**820481**	88	Y
Sonata (88>93)													
1.8	*BF3DE, AF3DE, BF2DE, AF2DE*	E	1795		G4CM	M			10/88 ▸ 06/93	2550033060	**819943**	88	Y
1.8	*BF3DA, BF2DA, AF2DA, AF3DA*	E	1795		G4CM	A			10/88 ▸ 06/93	2550033060	**819943**	88	Y
2.0,2.0 i 16V	*BF3FE, AF2FE, AF3FE, BF2FE*	E	1997		G4CP, G4CPD	M			10/88 ▸ 06/93	2550033060	**819943**	88	Y
2.0,2.0 i 16V	*BF2FA, AF3FA, BF3FA, AF2FA*	E	1997		G4CPD, G4CP	A			10/88 ▸ 06/93	2550033060	**819943**	88	Y
2.4 i	*AF2SE, BF2SE, AF3SE, BF3SE*	E	2351		G4CS	M			10/88 ▸ 03/91	2550033060	**819943**	88	Y
2.4 i	*AF3SA, AF2SA, BF3SA, BF2SA*	E	2351		G4CS	A			10/88 ▸ 03/91	2550033060	**819943**	88	Y
3.0 i V6	*AF3TA, BF3TA*	E	2972		G6AT	A			09/90 ▸ 06/93	2550033060	**819943**	88	Y
Sonata (93>98)													
1.8	*CF2DE, DF2DE, DF3DE, CF3DE*	E	1795		G4CM	M			07/93 ▸ 07/98	2550033060	**819943**	88	Y
1.8	*DF2DA, DF3DA, CF2DA, CF3DA*	E	1795		G4CM	A			07/93 ▸ 07/98	2550033060	**819943**	88	Y
2.0,2.0 16V	*DF3FE, CF3FE, CF2FE, DF2FE*	E	1997		G4CPD, G4CP	M			07/93 ▸ 07/98	2550033060	**819943**	88	Y
2.0,2.0 16V	*DF3FA, CF2FA, CF3FA, DF2FA*	E	1997		G4CPD, G4CP	A			07/93 ▸ 07/98	2550033060	**819943**	88	Y

• **New** Nouveau **Nuevo** Novo **Nuovo** Nieuw **Neu** Yeni Новый Nou

Type Ctr.		cc		AC			OE	Valeo	(°)C	
HYUNDAI (.../...)										
Sonata (93>98) (.../...)										
3.0 *DF3TA, CF3TA*	E	2972	G6AT	A			07/93 ▸ 07/98	2550033060	**819943**	88	Y
Sonata (98>2001)										
2.5 i V6 24V *EN41E*	E	2493	G6AV	A			08/98 ▸ 06/01	2550035531	●**820553**	82	Y
2.5 i V6 24V *EN41E*	E	2493	G6AV	M			09/98 ▸ 06/01	2550035531	●**820553**	82	Y
Sonata (2001>)										
2.7 i V6 24V *EF*	E	2657	G6BA-E4,G6BA-G-173	A			07/01 ▸ 02/05	2550035531	●**820553**	82	Y
2.7 i V6 24V *EF*	E	2657	G6BA-E4,G6BA-G-173	A			07/01 ▸ 02/05	2550037200	●**820553**	82	Y
2.7 i V6 24V *EF*	E	2657	G6BA-G-173	M			07/01 ▸ 02/05	2550037200	●**820553**	82	Y
2.7 i V6 24V *EF*	E	2657	G6BA-G-173	M			07/01 ▸ 02/05	2550035531	●**820553**	82	Y
Sonica										
2.5 i 24V *EN41E*	E	2493	G6AV	A			09/98 ▸ 06/01	2550035531	●**820553**	82	Y
2.5 i 24V *EN41E*	E	2493	G6AV	M			09/98 ▸ 06/01	2550035531	●**820553**	82	Y
Starex										
2.4 i *WWH7S*	E	2351	G4CSS	M			01/98 ▸	2550024000	**820990**	82	Y
2.4 i *WWH7S*	E	2351	G4CSS	A			01/98 ▸	2550024000	**820990**	82	Y
Stellar										
1600 *MTF3K*	E	1597	G32B	M			12/83 ▸ 01/92	2550011200	**820990**	82	Y
2000	E	1997	4G63	M			05/84 ▸ 12/89	2550011200	**820990**	82	Y
Terracan										
2.9 CRDi *HP, HPW, HPY2*	D	2902	CRDI29-150, CRDI29-163	M		☞4,8	07/01 ▸	0K41015171A	**820481**	88	Y
2.9 CRDi *HPW, HPY2*	D	2902	CRDI29-150, CRDI29-163	A		☞4,8	07/01 ▸	0K41015171A	**820481**	88	Y
3.5 i V6 *HPW*	E	3497	G674	A			07/01 ▸ 07/07	2550037200	●**820553**	82	Y
3.5 i V6 *HPW*	E	3497	G674	M			07/01 ▸ 07/07	2550037200	●**820553**	82	Y
Tiburon										
1.6 i 16V *GK*	E	1599	G4GRE2	M		☞4,9	01/02 ▸	2550023010	**820193**	82	Y
2.0 i 16V *GKDK*	E	1975	G4GF	M		☞4,9	01/02 ▸	2550023010	**820193**	82	Y
2.0 i 16V *GKDK*	E	1975	G4GF	A		☞4,9	01/02 ▸	2550023010	**820193**	82	Y
2.7 i V6 24V *GKFZ*	E	2657	G6BA-G-167	A			01/02 ▸ 12/06	2550037200	●**820553**	82	Y
2.7 i V6 24V *GKFZ*	E	2657	G6BA-G-167	M			01/02 ▸ 12/06	2550037200	●**820553**	82	Y
Trajet (2000>2004)										
2.7 i V6 24V	E	2656	G6BA	A			02/00 ▸ 02/04	2550035540	●**820553**	82	Y
2.0 CRDi 16V *FOVD*	D	1991	D4-EA	M			05/01 ▸ 02/04	2550027000	**820555**	85	Y
2.0 CRDi 16V *FOVD*	D	1991	D4-EA	A			05/01 ▸ 02/04	2550027000	**820555**	85	Y
Trajet (2004>)										
2.0 i 16V	E	1997	G4DP-E4	M		☞4,9	03/04 ▸	2550023010	**820193**	82	Y
2.0 i 16V	E	1997	G4DP-E4	A		☞4,9	03/04 ▸	2550023010	**820193**	82	Y
2.7 i V6 24V	E	2657	G6BA-G-173	A			03/04 ▸	2550035540	●**820553**	82	Y
2.0 CRDi 16V *FOVD*	D	1991	D4-EA	M			03/04 ▸	2550027000	**820555**	85	Y
2.0 CRDi 16V *FOVD*	D	1991	D4-EA	A			03/04 ▸	2550027000	**820555**	85	Y
Tucson										
2.0 i 16V *JMADO*	E	1975	G4GCG-141	M		☞4,9	07/04 ▸	2550023001	**820193**	82	Y
2.0 i 16V	E	1975	G4GCG-141	A		☞4,9	07/04 ▸	2550023010	**820193**	82	Y
2.0 CRDi 16V *JMBG, JMAIS, JMBHS*	D	1991	D4-EA	M			07/04 ▸	2550027000	**820555**	85	Y
2.0 CRDi 16V *JMAGP, JMBG, JMAIT*	D	1991	D4-EA	A			07/04 ▸	2550027000	**820555**	85	Y
2.7 i V6 24V	E	2656	G6BA	A			07/04 ▸	2550037200	●**820553**	82	Y
XG (99>2002)										
2.5 i V6 24V *XG*	E	2493	G6BV	A			01/99 ▸ 08/02	2550035531	●**820553**	82	Y
2.5 i V6 24V *XG*	E	2493	G6BV	M			01/99 ▸ 08/02	2550037200	●**820553**	82	Y
3.0 i V6 *XG*	E	2972	G6AT	A			01/99 ▸ 04/00	2550035531	●**820553**	82	Y
3.0 i V6 *XG*	E	2972	G6AT	A			04/00 ▸ 08/02	2550037200	●**820553**	82	Y
XG (2002>)										
2.5 i V6 24V	E	2493	G6AV	A			11/02 ▸	2550037200	●**820553**	82	Y

• **New** Nouveau **Nuevo** Novo **Nuovo** Nieuw **Neu** Yeni Новый Nou

Valeo

Type Ctr.		CC			AC			OE	Valeo	(°)C	
HYUNDAI (.../...)											
XG (2002>) (.../...)											
2.5 i V6 24V	E	2493	G6AV	A			09/02 ▸ 11/02	2550035531	●820553	82	Y
2.5 i V6 24V	E	2493	G6AV	M			11/02 ▸	2550037200	●820553	82	Y
2.5 i V6 24V	E	2493	G6AV	M			09/02 ▸ 11/02	2550035531	●820553	82	Y
3.0 i V6	E	2972	G6CT	A			09/02 ▸	2550037200	●820553	82	Y
3.5 i V6 *XGUPM*	E	3497	G674	A			11/02 ▸	2550037200	●820553	82	Y
HYUNDAI											
H1											
2.4 i *WWH7S*	E	2351	G4CSS	M			05/98 ▸	2550024000	820990	82	Y
H100											
2.4 *FDS1V, FDS1W*	E	2351	G4CSAAS	M			07/93 ▸	2550011200	820990	82	Y
Highway Van											
2.7 i V6 24V	E	2656	G6BA	A			03/00 ▸ 02/04	2550035540	●820553	82	Y
INNOCENTI											
Elba											
1.3 *146CW*	E	1301	146A5.000	M			04/91 ▸ 12/92	4409254	819885	82	Y
1.4 ie *146EN, 146EQ* 5055671 ▸	E	1372	146C5.000, 146D5.000	M		☞1	10/93 ▸ 1997	7725918	820466	82	Y
1.5 ie *146C9* ▸ 5055671	E	1498	149C1.000	M		☞4	04/92 ▸ 11/94	7671373	819940	85	Y
1.6 ie *146ER* 5055671 ▸	E	1581	146D6.000	M		☞1	01/95 ▸ 1997	7725918	820466	82	Y
1.6 ie *146E0* 5055671 ▸	E	1591	146C6.000	M		☞1	10/93 ▸ 12/94	7725918	820466	82	Y
1.7 D *146E1, 146DI*	D	1697	146B2.000	M		☞4	10/92 ▸ 1997	7625346	819963	80	Y
Mille											
1.0 ie *146FP*	E	994	146C7.000	M			05/94 ▸ 12/97	7649055	819885	82	Y
1.7 D *146EI*	D	1697	146B2.000	M		☞4	05/95 ▸	7625346	819963	80	Y
ISUZU											
Trooper											
3.1 TD *UBS69*	D	3059	4JG2	M			01/98 ▸ 12/99	8970898910	820506	82	Y
IVECO											
Daily (78>89)											
2.4 D,2.4 TD *1035, 1001, 1031, 1003*	D	2445	8140.21, 8140.61	M		☞8	1978 ▸ 1991	7303615	819903	79	Y
2.5 TD *1261*	D	2499	8140.27	M		☞8	1985 ▸ 1989	7303615	819903	79	Y
Daily (99>)											
2.8 TD *A6BA, A1BA, A7HB, A3HB A7BB, A3CB, A6CA, A5BA A5FA, A5CA, A3FB, A8HB A2FA, A2HB, A1FA, A2CA A4DB, A7FB, A2BA, A5HA A6FA, A3BB, A5GA, A1H6 A1CA, AHB1, A1HA, A6GA A6HB, A6AB*	D	2798	8140-43C, 8140-43N, 8140-43S 8140-43B	M		☞4,8	05/99 ▸	500329622	820432	82	Y
JAGUAR											
S-Type (98>2003)											
4.0 i V8 32V *DEW*	E	3996	AJV8	A			10/98 ▸ 01/02	AJ86484	820548	84	Y

• **New** Nouveau **Nuevo** Novo **Nuovo** Nieuw **Neu** Yeni Новый Nou

			cc			AC			OE	Valeo	(°)C	
JAGUAR (.../...)												
S-Type (98>2003) (.../...)												
4.2 i V8 32V	E	4196	AJ-V8-4.2	A			01/02 ▸	AJ82600		**820548**	84	Y
S-Type (2004>)												
4.2 i V8 32V	E	4196	AJ-V8-4.2	A			01/04 ▸	AJ86484		**820548**	84	Y
Sovereign												
3.2 *JHALG8, JHALG7*	E	3239	HPG	M		☞1	09/94 ▸	EBC3621		**820480**	88	Y
3.2 *JHALG4, JHANG4, JHANG3, JHALG3*	E	3239	HPG	A		☞1	09/94 ▸	EBC3621		**820480**	88	Y
4.0 *JHALD7, JHALD8*	E	3980	JPF	M		☞1	09/94 ▸	EBC3621		**820480**	88	Y
4.0 *JHAND3, JHAND4, JHALD3, JHALD4*	E	3980	JPF	A		☞1	09/94 ▸	EBC3621		**820480**	88	Y
XJ (94>2001)												
3.2 *JFALG8, JPALG7, JPALG8, JFALG7*	E	3239	HPG	M		☞1	09/94 ▸	EBC3621		**820480**	88	Y
3.2 *JPALG4, JFANG3, JFANG4, JFALG3 JFALG4, JPALG3*	E	3239	HPG	A		☞1	09/94 ▸	EBC3621		**820480**	88	Y
4.0 *JPALD7, JPALD8, JFALD7*	E	3980	JPF	M		☞1	09/94 ▸	EBC3621		**820480**	88	Y
4.0 *JFALD3, JPALD4, JFAND3, JPALD3 JFAND4*	E	3980	JPF	A		☞1	09/94 ▸	EBC3621		**820480**	88	Y
XJ (2002>)												
3.5 V8 32V	E	3555	AJ-V8-3.5	A			10/02 ▸	AJ86484		**820548**	84	Y
4.2 V8 32V	E	4196	AJ-V8-4.2	A			10/02 ▸	AJ86484		**820548**	84	Y
XJR												
3.6 *JPALH4, JPALH3*	E	3590	DPAM	A		☞1	11/88 ▸ 09/89	EBC3621		**820480**	88	Y
4.0 *JPALD7, JPALF8, JPALF7, JPALD8*	E	3980	EPCM, KPD	M		☞1	09/94 ▸ 09/99	EBC3621		**820480**	88	Y
4.0 *JPALD3, JPALD4, JPALF4, JPALF3*	E	3980	EPCM, KPD	A		☞1	09/94 ▸ 09/99	EBC3621		**820480**	88	Y
XJS (83>91)												
3.6 *JNAEC4P*	E	3590	DPAM	A		☞1	09/83 ▸ 1989	EBC3621		**820480**	88	Y
3.6 *JNACC8, JNAEC8*	E	3590	DPAM	M		☞1	09/83 ▸ 1989	EBC3621		**820480**	88	Y
XK (96>2004)												
4.0,4.0 i V8 32V	E	3996	AJ-V8-4.0R, AJ-V8-4.0	A			10/96 ▸	AJ82600		**820548**	84	Y
X-Type												
2.0 D 16V	D	1998	X404	M		☞4,8	09/03 ▸	JDE1275		**820174**	88	Y
2.2 D 16V	D	2198	DURATQ22	M		☞4,8	06/05 ▸	JDE1275		**820174**	88	Y
JEEP												
Cherokee (77>2001)												
4.0,4.0 i	E	3964	JEEP01, ERH-184	M		☞10	1977 ▸	83501426		**819851**	88	Y
4.0 i	E	3964	ERH-184	A		☞10	01/93 ▸	83501426		**819851**	88	Y
Cherokee (2001>2004)												
2.4 i 16V	E	2429	ED1	A			01/01 ▸	53010552AA		●**820568**	91	Y
2.4 i 16V	E	2429	ED1	M			01/01 ▸	53010552AA		●**820568**	91	Y
Grand Cherokee (93>2000)												
4.0 i	E	3964	ERH	A		☞10	01/93 ▸	83501426		**819851**	88	Y
2.5 TD	D	2499	ENC	M		☞1	01/97 ▸ 07/99	4778975		**820059**	80	Y
3.1 D	D	3124	EXA	A		☞1	11/98 ▸	4778975		**820059**	80	Y
Wrangler (86>96)												
2.5 i	E	2464	WR2.5	M		☞10	09/86 ▸	83501426		**819851**	88	Y
4.0 i	E	3956	WR4.0	M		☞10	09/90 ▸	83501426		**819851**	88	Y
4.2 i	E	4235	6L	M		☞10	1986 ▸ 08/90	83501426		**819851**	88	Y
Wrangler (96>2006)												
2.4 i Power Tech I-4	E	2429	ED	M		☞10	11/02 ▸	83501426		**819851**	88	Y
2.4 i Power Tech I-4	E	2429	ED	A		☞10	11/02 ▸	83501426		**819851**	88	Y
2.5 i	E	2464	EPE	M		☞10	08/96 ▸	83501426		**819851**	88	Y

• **New** Nouveau **Nuevo** Novo **Nuovo** Nieuw **Neu** Yeni Новый Nou

			CC		AC			OE	Valeo	(°)C		
JEEP (.../...)												
Wrangler (96>2006) (.../...)												
2.5 i		E	2464	EPE	A		☞10	08/96 ▸	83501426	**819851**	88	Y
4.0 i		E	3956	ERH-177	M		☞10	08/03 ▸	83501426	**819851**	88	Y
4.0 i		E	3956	ERH-177	A		☞10	08/03 ▸	83501426	**819851**	88	Y
4.0 i		E	3964	ERH	M		☞10	06/00 ▸	83501426	**819851**	88	Y
4.0 i		E	3964	ERH	A		☞10	08/96 ▸	83501426	**819851**	88	Y
KIA												
Avella												
1.3 i 16V		E	1324	B3-EGI	M			12/98 ▸ 12/99	0K2A115171	**820990**	82	Y
1.3 i 16V		E	1324	B3-EGI	A			12/98 ▸ 12/99	0K2A115171	**820990**	82	Y
1.5 i 16V		E	1498	B5-16V	M			12/98 ▸ 12/99	0K2A115171	**820990**	82	Y
1.5 i 16V		E	1498	B5-16V	A			12/98 ▸ 12/99	0K2A115171	**820990**	82	Y
Carens (99>2002)												
1.8 i 16V	*K2CB, FJUDB65, FJUSB65 FJWSB65, FJWDB65*	E	1793	T8	M			12/99 ▸ 07/02	0K2C015171A	**819943**	88	Y
1.8 i 16V	*FJWDB65, FJWSB65, K2CB FJUSB65, FJUDB65*	E	1793	T8	M		☞7,8	12/99 ▸ 07/00	0K2C015171	**820963**	88	N
Carens II (2002>2006)												
1.6 i 16V	*FJWDR65, FJWSR65*	E	1594	GA6D	M			07/02 ▸ 05/06	0K2C015171A	**819943**	88	Y
1.8 i 16V	*FJWSB65, FJUSB65, FJWDB65 FJUDB65*	E	1793	T8	M			07/02 ▸ 05/06	0K2C015171A	**819943**	88	Y
1.8 i 16V	*FJUSB6B, FJWDB6B, FJWSB6B FJUDB6B*	E	1793	T8	A			07/02 ▸ 05/06	0K2C015171A	**819943**	88	Y
2.0 CVVT 16V	*FJWDS65*	E	1975	G4GC	M		☞4,9	09/04 ▸ 05/06	2550023001	**820193**	82	Y
2.0 CVVT 16V	*FJWDS6B*	E	1975	G4GC	A		☞4,9	09/04 ▸ 05/06	2550023001	**820193**	82	Y
2.0 CRDi 16V	*FJUDS85, FJUSS85, FJWSS85 FJWDS85*	D	1991	TCI	M			07/02 ▸ 05/06	2550027000	**820555**	85	Y
2.0 CRDi 16V	*FJWDS8B, FJUDS8B, FJUSS8B FJWSS8B*	D	1991	TCI	A			07/02 ▸	2550027000	**820555**	85	Y
Carens III (2006>)												
2.0 CVVT 16V		E	1998	G4KA	M			06/06 ▸	2550027000	**820555**	85	Y
2.0 CVVT 16V		E	1998	G4KA	A			06/06 ▸	2550027000	**820555**	85	Y
2.0 CRDi 16V		D	1991	D4EA-VGT	M		☞4,9	06/06 ▸	2550023001	**820193**	82	Y
2.0 CRDi 16V		D	1991	D4EA-VGT	A		☞4,9	06/06 ▸	2550023001	**820193**	82	Y
Carnival (99>2002)												
2.9 CRDi	*FLBS285, FLBD285*	D	2902	J3	M		☞4,8	01/99 ▸ 01/02	0K41015171A	**820481**	88	Y
2.9 CRDi	*FLBD28B, FLBS28B*	D	2902	J3	A		☞4,8	01/99 ▸ 01/02	0K41015171A	**820481**	88	Y
Carnival (2002>)												
2.9 CRDi	*FLBS285, FLBD285*	D	2902	J3-CRDI	M		☞4,8	02/02 ▸ 02/06	0K41015171A	**820481**	88	Y
2.9 CRDi	*FLBS28B, FLBD28B*	D	2902	J3-CRDI	A		☞4,8	02/02 ▸ 02/06	0K41015171A	**820481**	88	Y
Carnival II (2006>)												
2.9 CRDi	*GBBG285, GBBD285*	D	2902	J3-CRDI-185	M		☞4,8	03/06 ▸	0K41015171A	**820481**	88	Y
2.9 CRDi	*GBBD28B, GBBG28B*	D	2902	J3-CRDI-185	A		☞4,8	03/06 ▸	0K41015171A	**820481**	88	Y
Ceed												
2.0 CVVT 16V		E	1975	G4GC	M		☞4,9	08/06 ▸	2550023001	**820193**	82	Y
2.0 CVVT 16V		E	1975	G4GC	A		☞4,9	08/06 ▸	2550023001	**820193**	82	Y
1.6 CRDi VGT 16V		D	1582	D4FB-L, D4FB	M			08/06 ▸	2550027000	**820555**	85	Y
2.0 CRDi VGT 16V		D	1991	D4EA-VGT, D4EA	M			08/06 ▸	2550027000	**820555**	85	Y
Cerato												
1.6 i 16V	*CDAGR65*	E	1599	G4ED	M		☞4,9	01/04 ▸	2550023001	**820193**	82	Y
1.6 i 16V	*CDAGR6B*	E	1599	G4ED	A		☞4,9	01/04 ▸	2550023001	**820193**	82	Y
2.0 CVVT 16V		E	1975	G4GC	M		☞4,9	01/04 ▸	2550023001	**820193**	82	Y
2.0 CVVT 16V		E	1975	G4GC	A		☞4,9	01/04 ▸	2550023001	**820193**	82	Y
1.5 CRDi 16V	*CDAGPC5*	D	1493	D4FA	M			04/05 ▸	2550027000	**820555**	85	Y

• **New** Nouveau **Nuevo** Novo **Nuovo** Nieuw **Neu** Yeni Новый Nou

Type Ctr.		CC		AC		2 3	OE	Valeo	(°)C	
KIA (.../...)										
Cerato (.../...)										
1.6 CRDi 16V	D	1582	D4FB	M		03/06 ▸ 07/07	2550027000	**820555**	85	Y
1.6 CRDi 16V	D	1582	D4FB	A		03/06 ▸ 07/07	2550027000	**820555**	85	Y
2.0 CRDi 16V *CDAGS85, CDFGS85*	D	1991	D4EA	M		01/04 ▸	2550027000	**820555**	85	Y
Clarus										
1.8 i 16V *K9AA, K9AN, K9AR, GC5232*	E	1793	T8	M		05/95 ▸	0K20115171	**820990**	82	Y
1.8 i 16V *K9AS, K9AP, K9AB*	E	1793	T8	A		05/95 ▸	0K20115171	**820990**	82	Y
2.0 i *K9AG, GC5222, K9AC, K9AE, K9AJ K9AL*	E	1998	FE-K9K, FE-K9	M	☞7,8	05/95 ▸	KE5D315171	**820191**	88	Y
2.0 i *K9AH, K9AF, K9AM, GC5223, K9AK K9AD*	E	1998	FE-K9K, FE-K9	A	☞7,8	05/95 ▸	KE5D315171	**820191**	88	Y
Credos										
1.8 i 16V *K9AA*	E	1793	T8	M		01/97 ▸	0K20115171	**820990**	82	Y
1.8 i 16V *K9AB*	E	1793	T8	A		01/97 ▸	0K20115171	**820990**	82	Y
Elan										
1.8 i 16V	E	1793	TED	M		01/99 ▸	0K20115171	**820990**	82	Y
Joice										
2.0 i 16V *EGZDS65*	E	1997	G4	M		09/99 ▸ 2003	2550033060	**819943**	88	Y
2.0 i 16V *EGZDS6B, EGZDS*	E	1997	G4, G4CPD	A		09/99 ▸ 2003	2550033060	**819943**	88	Y
Leo										
1.5 i *K280*	E	1498	B5	M		08/96 ▸	0K2C015171A	**819943**	88	Y
1.8 i 16V *K284*	E	1793	T8D	M		04/97 ▸	0K20115171	**820990**	82	Y
Magentis (2001>2005)										
2.5 i V6 24V *FSFGV6B*	E	2493	G6BV	A		02/01 ▸ 12/05	2550037200	●**820553**	82	Y
2.5 i V6 24V *FSFGV65*	E	2493	G6BV	M		02/01 ▸ 12/05	2550037200	●**820553**	82	Y
Magentis II (2006>)										
2.7 i V6 24V *DDFGH6D*	E	2656	G6EA	A		01/06 ▸	2550037200	●**820553**	82	Y
2.0 CRDi 16V *DDFDS87*	D	1991	D4EA-VGT	M		01/06 ▸	0K05415171	**820072**	88	Y
2.0 CRDi 16V *DDFDS8B*	D	1991	D4EA-VGT	A		01/06 ▸	0K05415171	**820072**	88	Y
Mentor										
1.5 i *FA2222, FA2422*	E	1498	B5-16V, B5	M		06/96 ▸ 06/01	KHE4115171	**820990**	82	Y
1.5 i *FA2223, FA2423*	E	1498	B5, B5-16V	A		01/97 ▸ 06/01	KHE4115171	**820990**	82	Y
1.6 i	E	1594	GA6D	M		06/01 ▸	0K2C015171A	**819943**	88	Y
1.6 i	E	1594	GA6D	A		06/01 ▸	0K2C015171A	**819943**	88	Y
1.6 i *FA2252*	E	1598	B6	M		05/94 ▸ 01/97	KHE4115171	**820990**	82	Y
1.6 i *FA2253*	E	1598	B6	A		05/94 ▸ 01/97	KHE4115171	**820990**	82	Y
Opirus										
3.5 i V6 24V *LD2243*	E	3497	6G74	A		04/03 ▸	2550002500	**820510**	82	Y
3.5 i V6 24V *LD2243*	E	3497	6G74	A		04/03 ▸ 10/06	2550037200	●**820553**	82	Y
Picanto										
1.0 *BA2442*	E	999	G4HF	M		01/04 ▸	2550002500	**820510**	82	Y
1.1 *BA2432*	E	1086	G4HG	M		01/04 ▸	2550002500	**820510**	82	Y
1.1 *BA2433*	E	1086	G4HG	A		01/04 ▸	2550002500	**820510**	82	Y
1.1 CRDi *BA2452*	D	1120	D3FA	M		11/05 ▸	2550027000	**820555**	85	Y
Pride										
1.1 *DA2311*	E	1139	B1	M		10/87 ▸ 09/94	MHE4115171	**820990**	82	Y
1.3,1.3 i *DA2322, DA23, DA2422 K11E, K11C, K11H, K11G*	E	1324	B3, B3-EGI	M		10/86 ▸ 12/92	MHE4115171	**820990**	82	Y
1.3 i *K11D*	E	1324	B3-EGI	A		10/94 ▸ 07/00	KHE4115171	**820990**	82	Y
Pride Wagon										
1.3 i *K14G*	E	1324	B3-EGI	M		08/98 ▸ 07/00	0K2A115171	**820990**	82	Y

• **New** Nouveau **Nuevo** Novo **Nuovo** Nieuw **Neu** Yeni Новый Nou

			Type Ctr.		CC		AC			OE	Valeo	(°)C	
KIA (.../...)													
Pride Wagon (.../...)													
1.3 i		E		1324	B3-EGI	A			08/98 ▸ 07/00	0K2A115171	**820990**	82	Y
Retona													
2.0 i 16V	*FK5DS66, FKTDS66*	E		1998	FE-DI	M		☞7,8	06/00 ▸	0K01315171	**820963**	88	N
2.0 i 16V	*FK5DS66, FKTDS66*	E		1998	FE-DI	M		☞7,8	09/99 ▸ 06/00	0K9FC15171	**820191**	88	Y
2.0 TCi	*FK5DS86, FKTDS86, FKVDS86*	D		1998	RF-TCI	M			09/99 ▸	0K05415171	**820072**	88	Y
2.0 TCi	*FK5DS8C*	D		1998	RF-TCI	A			09/99 ▸	0K05415171	**820072**	88	Y
Rio (2000>2005)													
1.3 i	*FDFDL35, FDADL35*	E		1343	MI-TECH-SOH	M		☞7,8	07/00 ▸	0K30E15171	**820963**	88	N
▸ 000701													
1.3 i	*FDFDL35, FDADL35*	E		1343	MI-TECH-SOH, MI-TECH-S82	M			07/00 ▸	0K2C015171A	**819943**	88	Y
000701 ▸ 000701													
1.3 i	*FDFDL3B, FDADL3B*	E		1343	MI-TECH-SOH	A		☞7,8	07/00 ▸	0K30E15171	**820963**	88	N
▸ 000701													
1.3 i	*FDFDL3B, FDADL3B*	E		1343	MI-TECH-SOH	A			07/00 ▸	0K2C015171A	**819943**	88	Y
000701 ▸ 000701													
1.5 i 16V	*FDFDP65, FDADP65*	E		1493	MI-TECH-DOH	M		☞7,8	07/00 ▸	0K30E15171	**820963**	88	N
▸ 000701													
1.5 i 16V	*FDADP65, FDFDP65*	E		1493	MI-TECH-DOH	M			07/00 ▸	0K2C015171A	**819943**	88	Y
000701 ▸ 000701													
1.5 i 16V	*FDFDP6B, FDADP6B*	E		1493	MI-TECH-DOH	A		☞7,8	07/00 ▸	0K30E15171	**820963**	88	N
▸ 000701													
1.5 i 16V	*FDFDP6B, FDADP6B*	E		1493	MI-TECH-DOH	A			07/00 ▸	0K2C015171A	**819943**	88	Y
000701 ▸ 000701													
Rio (2005>)													
1.4 i	*DE2412, DE2212*	E		1399	G4EE	M		☞4,9	06/05 ▸	2550023001	**820193**	82	Y
1.4 i	*DE2413, DE2213*	E		1399	G4EE	A		☞4,9	06/05 ▸	2550023001	**820193**	82	Y
1.6 i	*DE2432, DE2232*	E		1599	G4GD	M		☞4,9	06/05 ▸	2550023001	**820193**	82	Y
1.6 i	*DE2433, DE2233*	E		1599	G4GD	A		☞4,9	06/05 ▸	2550023001	**820193**	82	Y
1.5 CRDi	*DE2442, DE2242*	D		1493	D4FA	M			06/05 ▸	2550027000	**820555**	85	Y
1.5 CRDi	*DE2243, DE2443*	D		1493	D4FA	A			06/05 ▸	2550027000	**820555**	85	Y
Sedona (99>2002)													
2.9 CrDi	*FLBS285, FLBD285*	D		2902	J3	M		☞4,8	09/99 ▸ 01/02	0K41015171A	**820481**	88	Y
2.9 CrDi	*FLBS28B, FLBD28B*	D		2902	J3	A		☞4,8	09/99 ▸ 01/02	0K41015171A	**820481**	88	Y
Sedona (2002>)													
2.9 CrDi	*FLBD285, FLBS285*	D		2902	J3	M		☞4,8	02/02 ▸	0K41015171A	**820481**	88	Y
2.9 CrDi	*FLBS28B, FLBD28B*	D		2902	J3	A		☞4,8	02/02 ▸	0K41015171A	**820481**	88	Y
Sephia													
1.5 i	*K26T, K281, K26S, K280*	E		1498	B5	M			01/96 ▸	0K20115171	**820990**	82	Y
1.5 i	*K26W, K282, K26V, K283*	E		1498	B5	A			01/96 ▸	0K20115171	**820990**	82	Y
1.6 i	*K24K, FA2252, FA, K24J, K2*	E		1598	B6	M			01/93 ▸	0K20115171	**820990**	82	Y
1.6 i	*K24M, K24L, FA2253, K2, FA*	E		1598	B6	A			01/93 ▸	0K20115171	**820990**	82	Y
1.8 i 16V	*K285, K284, K26X*	E		1793	T8D	M			01/96 ▸	0K20115171	**820990**	82	Y
1.8 i 16V	*K286, K26Y, K287*	E		1793	T8D	A			01/96 ▸	0K20115171	**820990**	82	Y
Sephia II													
1.5 i		E		1498	B5-16V	M			09/98 ▸ 05/01	0K20115171	**820990**	82	Y
1.5 i	*K2AD*	E		1498	B5-16V	A			09/98 ▸ 05/01	0K20115171	**820990**	82	Y
Shuma													
1.5 i	*FB2422, K2AC*	E		1498	B5-16V, B5	M			09/98 ▸	0K20115171	**820990**	82	Y
1.5 i	*K2AD*	E		1498	B5-16V	A			09/98 ▸	0K20115171	**820990**	82	Y
1.6 i	*FB2472, FXADR65*	E		1594	GA6D	M			02/01 ▸	0K2C015171A	**819943**	88	Y
1.8 i 16V		E		1793	T8D	M			09/98 ▸ 02/01	0K20115171	**820990**	82	Y
1.8 i 16V		E		1793	T8D	A			09/98 ▸ 02/01	0K20115171	**820990**	82	Y
Sorento (2006>2009)													
3.3 i V6 24V	*FYWD586*	E		3297	33L	A			06/06 ▸ 08/09	255003C100	**820511**	82	Y
3.3 i V6 24V	*FYWD586*	E		3297	33L	M			06/06 ▸ 08/09	255003C100	**820511**	82	Y

• **New** Nouveau **Nuevo** Novo **Nuovo** Nieuw **Neu** Yeni Новый Nou

Type Ctr.		cc		AC			OE	Valeo	(°)C	
KIA (.../...)										
Sorento (2006>2009) (.../...)										
3.3 i V6 24V *FYWD586*	E	3342	G6DB	A			06/06 ▸ 08/09	255003C100	**820511**	82	Y
3.3 i V6 24V *FYWD586*	E	3342	G6DB	M			06/06 ▸ 08/09	255003C100	**820511**	82	Y
Sportage										
2.0 i 16V *FQWGS66*	E	1975	G4GC	M		☞4,9	12/04 ▸	2550023001	**820193**	82	Y
2.0 i 16V	E	1975	G4GC	A		☞4,9	12/04 ▸	2550023001	**820193**	82	Y
2.0 i 16V *FMXDS66, FMVDS66, FMWDS66 FMYDS66*	E	1998	FE-DI	M		☞7,8	10/00 ▸ 09/02	0K01315171	**820963**	88	N
2.0 i,2.0 i 16V *K200F, K00E, K200L, K40A K01W*	E	1998	FE-DI, FE	M		☞7,8	07/93 ▸ 09/02	KE5D315171	**820191**	88	Y
2.0 i 16V *FMXDS6C, FMYDS6B, FMVDS6C FMWDS6C*	E	1998	FE-DI	A		☞7,8	10/00 ▸ 09/02	0K01315171	**820963**	88	N
2.0 i 16V *K01X*	E	1998	FE-DI	A		☞7,8	06/95 ▸ 09/02	KE5D315171	**820191**	88	Y
2.7 i V6 24V *FQWGH6C*	E	2656	G6BA	A			12/04 ▸	2550037200	●**820553**	82	Y
2.0 TD *K00N*	D	1998	RF	A			06/96 ▸ 09/02	0K05415171	**820072**	88	Y
2.2 D *K037*	D	2184	HW	M		☞7,8	07/93 ▸ 09/02	KE5D315171	**820191**	88	Y
KIA										
Bongo										
2.7 D *K76*	D	2665	J2	M		☞4,8	08/98 ▸ 2000	0K41015171A	**820481**	88	Y
K2700										
2.7 D	D	2665	J2	M		☞4,8	07/97 ▸	0K41015171A	**820481**	88	Y
Pregio										
2.7 D *K76B, K76C*	D	2665	J2	M		☞4,8	11/95 ▸	0K41015171A	**820481**	88	Y
LADA										
111										
1.5 16V,1.5 i 16V	E	1499	VAZ2112	M			01/95 ▸	2101130601001	**819913**	80	N
112										
1.5 i 16V	E	1499	VAZ2112	M			01/95 ▸	2101130601001	**819913**	80	N
1200 - 1600										
1.2	E	1198	VAZ2101	M			1973 ▸	21011306010	**819913**	80	N
1.3	E	1294	VAZ2105	M			1976 ▸	21011306010	**819913**	80	N
1.5	E	1451	VAZ21043	M			1974 ▸	21011306010	**819913**	80	N
1.6 *2106*	E	1568	VAZ2106	M			08/78 ▸ 10/83	21011306010	**819913**	80	N
Forma										
1.1 *21081*	E	1099	VAZ21081K	M			09/91 ▸ 06/92	2108130601010	**819912**	87	N
1.3 *2108*	E	1288	VAZ2108, VAZ2108K	M			09/91 ▸ 08/95	2108130601010	**819912**	87	N
1.5 *21083*	E	1499	VAZ21083, VAZ21083K	M			09/91 ▸ 08/96	2108130601010	**819912**	87	N
Kalinka										
1.5 *21043*	E	1451	VAZ21043, VAZ21043D	M			10/95 ▸ 1996	21011306010	**819913**	80	N
1.7 i *21044*	E	1690	VAZ21044	M			10/96 ▸ 1998	21011306010	**819913**	80	N
Natacha										
1.1 *21081*	E	1099	VAZ21081K	M			05/93 ▸	2108130601010	**819912**	87	N
1.5 *21083*	E	1499	VAZ21083K	M			05/93 ▸	2108130601010	**819912**	87	N
Niva										
1.6 *21210, 2121*	E	1568	VAZ2121	M			03/76 ▸ 1995	21211306010	●**820791**	87	N
1.7 i *2121, 21213, 21214*	E	1690	VAZ21214, VAZ21044	M			09/94 ▸	2101130601001	**819913**	80	N
1.9 D *2121, 21215, 21213*	D	1905	XUD95D,XUD9L	M			07/93 ▸	212151306015	**819950**	83	Y
Nova										
1.7 i	E	1690	VAZ21044	M			09/94 ▸	2101130601001	**819913**	80	N

• **New** Nouveau **Nuevo** Novo **Nuovo** Nieuw **Neu** Yeni Новый Nou

			Type Ctr.		CC			AC			OE	Valeo	(°)C
LADA (.../...)													
Sagona													
1500,1500 i	*21099*	E		1499	VAZ21083K, VAZ2108320 VAZ21083	M			09/91 ▸	2108130601010	**819912**	87	N
1.5 D	*21099*	D		1527	TUD5	M			07/95 ▸	210951306015	**819897**	89	Y
Samara													
1100	*21081, 21091*	E		1099	VAZ21081K, VAZ21081	M			07/86 ▸	2108130601010	**819912**	87	N
1300	*21080, 21090, 2108, 21091*	E		1288	VAZ2108, VAZ2108K	M			07/86 ▸	2108130601010	**819912**	87	N
1500,1500 i	*21093, 21083*	E		1499	VAZ21083, VAZ2108320 VAZ21083K	M			07/86 ▸	2108130601010	**819912**	87	N
1.5 D	*21095, 21085*	D		1527	TUD5	M			03/95 ▸	210951306015	**819897**	89	Y
LANCIA													
Beta													
1300	*828CB3, 828BC3, 828BB*	E		1297	828B3.000	M			10/74 ▸ 07/78	4440367	**819837**	79	N
1300	*828BC, 828CB3*	E		1301	828B,828BB.3A0	M			07/78 ▸ 10/80	4440367	**819837**	79	N
1300	*828CB3*	E		1366	828D3.000	M			07/81 ▸ 1985	4440367	**819837**	79	N
1400	*828AB*	E		1438	828A2.000	M			1972 ▸ 11/75	4440367	**819837**	79	N
1600	*828BCO, 828BSO, 828AS, 828BF, 828BC 828AC, 828CB0, 828AB, 828DB0*	E		1585	828A.000,828AC.000,828B.000	M			10/73 ▸ 1985	4440367	**819837**	79	N
1800	*828AS, 828AC, 828AB*	E		1756	828A1.000,828AC1.000	M			1972 ▸ 11/75	4440367	**819837**	79	N
2.0,2000,2000 i	*828BF, 828DB1, 828BC1 828BC, 828CB3, 828BS1*	E		1995	134A5000,828B1.000,828B4.000	M			03/75 ▸ 1985	4440367	**819837**	79	N
Dedra													
1.6 ie,1.6 ie 16V	*835/EB54A/EB55B/EI55B*	E		1581	159B9.000, 182A4.000	M	+/-	☞1	07/94 ▸ 09/99	7778653	**820433**	87	Y
1.6 ie 16V 4104743 ▸	*835/EI54A/EI55B*	E		1581	182A4.000	M	+/-		12/97 ▸ 09/99	46776217	**820454**	88	Y
1.6 ie	*835/AA54A/AB54A/BA54A*	E		1581	835A1.000, 835A1.046	M		☞1,4	03/89 ▸ 06/94	7581201	**819960**	87	Y
1.6 ie	*835/AA54A/AB54A/AN54A BA54A*	E		1581	835A1.000, 835A1.046 835C1.000	M			03/89 ▸ 06/94	7615235	**819896**	88	Y
1.6 ie	*835AN54A*	E		1581	835C1.000	M		☞1,4	10/92 ▸ 06/94	7723325	**820150**	87	Y
1.8 ie 16V 4104743 ▸	*835/EH55B/FG54A/FG55B*	E		1747	182A2.000, 183A1.000	M	+/-		03/96 ▸ 09/99	60620386	**820448**	88	Y
1.8 ie 16V	*835/EH54A/EH55B/FG55B*	E		1747	183A1.000, 182A2.000	M			03/96 ▸ 09/99	60812410	**820401**	83	Y
1.8 ie	*835/AC54A/AD54A/AT54A BC54A/BD54A/CD54A*	E		1756	835C5.000, 835A2.000 835A2.046	M			03/89 ▸ 06/94	7615235	**819896**	88	Y
2.0 ie	*835/AI54A/AL54A*	E		1995	835A5.046, 835A5.000	M		☞8	03/89 ▸ 06/94	7656567	**819882**	81	Y
2.0 ie,2.0 ie Turbo	*835/AI54A/AL54A/AO54W AP54W/AQ54A/AR54A*	E		1995	835A8.046, 835A5.046 835A5.000, 835A7.000 835A8.000, 835A7.046	M			03/89 ▸ 06/94	7615235	**819896**	88	Y
2.0 ie	*835AL44A*	E		1995	835A5.046	A		☞8	12/90 ▸ 06/94	7656567	**819882**	81	Y
2.0 ie	*835AL44A*	E		1995	835A5.046	A			12/90 ▸ 06/94	7615235	**819896**	88	Y
1.9 TDs	*835/AS54A/EF54A/EF55B*	D		1929	160D1.000	M	+/-	☞2	03/89 ▸	7730098	**820066**	80	Y
1.9 TDs	*835/AG54A/AG54A//EE54A EE55B*	D		1929	835A4.000	M	+/-		07/94 ▸ 10/95	7729545	**820161**	80	Y
1.9 TDs	*835/AS54A/EF54A/EF55B*	D		1929	160D1.000	M	+/-	☞2	09/94 ▸ 09/99	7727042	**820403**	80	Y
1.9 Tds 4104743 ▸	*835/EE54A/EE55B*	D		1929	835A4.000	M	-		10/95 ▸ 09/99	46431723	**820407**	80	Y
1.9 Tds ▸ 4104743	*835/AG54A/AG54A//AS54A EE54A/EE55B*	D		1929	835A4.000, 160D1.000	M	+/-	☞4	03/89 ▸ 10/95	7614475	**819964**	80	Y
1.9 Tds	*835EE55B, 835EE54A*	D		1929	835A4.000	M	+		10/95 ▸ 09/99	46431724	**820155**	80	Y
Delta (79>86)													
1300	*831/AB03/AB04*	E		1301	831A.000	M		☞4	09/79 ▸ 04/86	7574911	**819940**	85	Y
1500	*831AB01*	E		1498	831A1.000	M		☞4	09/79 ▸ 04/86	7574911	**819940**	85	Y
1500	*831AB08B*	E		1498	831A1.000	A		☞4	09/79 ▸ 04/86	7574911	**819940**	85	Y
1600,1600 Turbo	*831/AB06/AB07*	E		1585	831A7.000, 831A4.000	M			10/82 ▸ 04/86	7615235	**819896**	88	Y
Delta (86>93)													
1.1 i	*831AB015*	E		1116	831B8.000	M		☞4	04/86 ▸ 12/90	7574911	**819940**	85	Y
1300	*831/AB011/AB022*	E		1301	831B.000	M		☞4	05/86 ▸ 1993	7574911	**819940**	85	Y
1500	*831/AB014/AB025*	E		1498	831A1.000, 831B1.000	A		☞4	05/86 ▸ 1993	7574911	**819940**	85	Y

• **New** Nouveau **Nuevo** Novo **Nuovo** Nieuw **Neu** Yeni Новый Nou

Type Ctr.		cc		AC			OE	Valeo	(°)C	
LANCIA (.../...)										
Delta (86>93) (.../...)										
1600 Turbo,1600 ie 1600 ie Turbo	*831/AB010/AB016/AB017* *AB020/AB020S*	E	1585	831B3.000, 831B7.000 831B7.046, 149C2.000	M		05/86 ▸ 1993	7615235	**819896**	88	Y
2.0 i Turbo 2.0 i Turbo 16S	*831/AB019/AB024/AB024P* *AB024S/AB026/AB027/AB028* *AB029*	E	1995	831E5.046, 831C5.046 831B5.000, 831C5.000 831E5.000, 831D5.000	M		04/86 ▸	7615235	**819896**	88	Y
2.0 i Turbo	*831AB024*	E	1995	831C5.000	M		☞8 09/87 ▸ 07/88	7656567	**819882**	81	Y
1.9 TD	*831/AB018/AB021*	D	1929	831D1.000	M		☞4 04/86 ▸ 1993	7625346	**819963**	80	Y
Delta (93>99)										
1.4 ie	*836/AF55A/AH55A*	E	1372	160A1.046, 836A4.000	M		☞1,4 03/93 ▸ 08/99	7723325	**820150**	87	Y
1.6 ie	*836/AD55A/AP53A/AP55A* *BD55A*	E	1581	182A6.000, 835C1.000	M		☞1,4 03/93 ▸ 08/99	7723325	**820150**	87	Y
1.6 ie 16V	*836/AO53A/AO55A*	E	1581	182A4.000	M		07/95 ▸ 08/99	46776216	**820446**	88	Y
1.8 ie 16V	*836/AR53A/AR55A*	E	1747	183A1.000	M		05/96 ▸ 04/98	60812410	**820401**	83	Y
1.8 ie 16V	*836/AR53A/AR55A*	E	1747	183A1.000	M		04/98 ▸ 08/99	60814382	**820402**	88	Y
1.8 ie	*836/AE55A/AG55A/AI55A* *AL55A/BE55A/BI55A*	E	1756	835C4.000, 835C2.000 836A5.000, 836A6.000	M		03/93 ▸ 08/99	7615235	**819896**	88	Y
1.9 TD	*836/AN53A/AN55A*	D	1929	160D1.000	M	+	☞2 06/94 ▸ 08/99	7727042	**820403**	80	Y
1.9 TD	*836/AM53A/AM55A*	D	1929	835A4.000	M	+	06/94 ▸ 09/95	7729545	**820161**	80	Y
1.9 TD	*836/AM53A/AM55A*	D	1929	835A4.000	M		☞4 06/94 ▸ 09/95	7614475	**819964**	80	Y
1.9 TD	*836/AN53A/AN55A*	D	1929	160D1.000	M		☞2 06/94 ▸ 08/99	7730098	**820066**	80	Y
1.9 TD	*836/AM53A/AM55A*	D	1929	835A4.000	M		10/95 ▸ 08/99	46431723	**820407**	80	Y
1.9 TD	*836AM55A, 836AM53A*	D	1929	835A4.000	M		10/95 ▸ 08/99	46431724	**820155**	80	Y
Kappa										
2.0 ie 20V 2078842 ▸	*838/AA1AA/AG1AA/BG1AA*	E	1995	838A6.000, 838A1.000	M		☞6 ▸ 10/01	46520785	**820449**	88	Y
2.0 ie 20V 2078842 ▸	*838/AA1AA/AG1AAA*	E	1995	838A6.000, 838A1.000	A		☞6 ▸ 10/01	46520785	**820449**	88	Y
2.0 ie 20V	*838AG1AAA, 838AA1AA*	E	1995	838A1.000,838A6.000	A		10/94 ▸ 10/01	7756249	**820461**	83	Y
2.0 ie 20V	*838BG1AA, 838AA1AA* *838AG1AA*	E	1995	838A1.000,838A6.000	M		10/94 ▸ 10/01	7756249	**820461**	83	Y
2.0 ie Turbo 20V	*838/AM1AA/BM1AA/CM1AA*	E	1998	175A3.000	M		05/98 ▸	46432157	**820978**	88	Y
2.4 ie 20V 2078842 ▸	*838/AI1AA/CC11A/CC1AA*	E	2446	838B2.000, 838A2.000 838A2.027	M		☞6 ▸ 10/01	46520785	**820449**	88	Y
2.4 ie 20V 2078842 ▸	*838BC11A*	E	2446	838A2.000	A		☞6 ▸ 10/01	46520785	**820449**	88	Y
2.4 ie 20V	*838BC11A*	E	2446	838A2.000	A		05/96 ▸ 10/01	7756249	**820461**	83	Y
2.4 ie 20V	*838BC1AA, 838AC1AA* *838AI1AA, 838CC1AA*	E	2446	838A2.000,838A2.027	M		10/94 ▸ 10/01	7756249	**820461**	83	Y
2.4 JTD 2089886 ▸	*838/AL1AA/BL1AA*	D	2387	838A8.000	M		05/98 ▸	60815741	**820410**	88	Y
2.4 JTD	*838/AL1AA/BL1AA*	D	2387	838A8.000	M		04/99 ▸	46546375	**820411**	88	Y
Lybra										
1.6 i 16V	*839/AXA1A0/BXA1A0*	E	1581	182A4.000	M		09/99 ▸	60814382	**820402**	88	Y
1.6 i 16V	*839/AXF1A/BXF1A*	E	1596	182B6.000	M		09/99 ▸	46776217	**820454**	88	Y
1.8 i 16V	*839/AXB1A0/AXG1A/BXB1A0* *BXG1A*	E	1747	839A4.000, 839A7.000	M		09/99 ▸	60814382	**820402**	88	Y
2.0 i 20V	*839/AXC1A0/BXC1A0/BXH1A*	E	1998	182B7.000	M		☞6 09/99 ▸	46520785	**820449**	88	Y
2.0 i 20V	*839/AXH1A/BXH1A*	E	1998	185A8.000	M		☞6 09/99 ▸	46804764	**820587**	88	Y
2.0 i 20V	*839/AXC111/BXC111*	E	1998	182B7.000	A		☞6 09/99 ▸	46520785	**820449**	88	Y
1.9 JTD	*839/AXI1A/BXI1A*	D	1910	937A2.000, AR37101	M		09/99 ▸	46795667	**820562**	88	Y
1.9 JTD	*839/AXD1A0/BXD1A0*	D	1910	AR32302	M		09/99 ▸	46546375	**820411**	88	Y
2.4 JTD	*839*	D	2387	841C.000	M		05/02 ▸	46822435	**820561**	88	Y
2.4 JTD	*839/AXE1A/AXE1A0/BXE1A* *BXE1A0*	D	2387	839A5.000, AR32501	M		09/99 ▸	46546375	**820411**	88	Y
Musa (2004>2006)										
1.4 i 16V	*350/AXA11/AXA1A*	E	1368	843A1.000, 192B2.000	M		☞1,4 07/04 ▸	46523118	**819938**	87	Y
1.4 MPi	*350AXF1A*	E	1368	350A1.000	M		07/04 ▸	55202176	**820935**	88	Y
1.3 JTD Multijet 16V 1.3 MJTD 16V	*350AXB11, 350AXB1A*	D	1248	188A9.000	M		07/04 ▸	55180041	**820563**	88	Y
1.9 JTD	*350AXC1A*	D	1910	188B2.000	M		07/04 ▸	55186478	**820577**	88	Y

• **New** Nouveau **Nuevo** Novo **Nuovo** Nieuw **Neu** Yeni Новый Nou

Valeo

		Type Ctr.		cc		AC			OE	Valeo	(°)C		
LANCIA (.../...)													
Musa (2004>2006) (.../...)													
1.3 JTD Multijet 16V	*350AXG1A*	D	1248	199A3.000	M			01/06 ▸	55194271	**820934**	88	Y
Musa (2007>)													
1.4 MPi	*350AXF1A*	E	1368	350A1.000	M			10/07 ▸	55202176	**820935**	88	Y
1.4 i 16V	*350/AXA11/AXA1A/AXA1B*	E	1368	843A1.000	M			10/07 ▸	46523118	**819938**	87	Y
1.9 JTD	*350AXC1A*	D	1910	188B2.000	M			10/07 ▸	55186478	**820577**	88	Y
Phedra													
2.0 i 16V	*179AXA1A*	E	1997	EW10J4/L4	M			09/02 ▸	9630066680	**820431**	89	Y
2.0 i 16V	*179AXA11*	E	1997	EW10J4/L4	A			09/02 ▸	9630066680	**820431**	89	Y
2.0 JTD 16V	*179AXE1A*	D	1997	DW10ATED4	A		☞4	03/03 ▸	9616090180	**819950**	83	Y
2.2 JTD 16V	*179AXC1A*	D	2179	DW12ATED4/L4	M		☞4	09/02 ▸	9616090180	**819950**	83	Y
Prisma													
1300	*831/ABOA/ABOL/ABOL1*	E	1301	831B.000	M			01/83 ▸ 04/89	82390243	**820153**	80	Y
1500	*831ABOB*	E	1498	831B1.000	M		☞4	04/83 ▸ 05/86	82342688	**819939**	85	Y
1500	*831ABOCB*	E	1498	831B1.000	A		☞4	04/83 ▸ 05/86	82342688	**819939**	85	Y
1500	*831ABON*	E	1498	831B1.000	M			06/86 ▸ 04/89	7574911	**819940**	85	Y
1500	*831ABOO*	E	1498	831B1.000	A			06/86 ▸ 04/89	7574911	**819940**	85	Y
1600	*831ABOD*	E	1585	831B6.000	M			04/83 ▸ 05/86	4440367	**819837**	79	N
1600,1600 ie	*831/ABOR/ABOV/ABOV1/ABOV2*	E	1585	831B6.000, 831B7.000	M			04/86 ▸ 04/89	7615235	**819896**	88	Y
2000 ie	*831ABOU*	E	1995	828B1.000	M			04/86 ▸ 04/89	7615235	**819896**	88	Y
1.9 TD,1900 D	*831/ABOE/ABOF/ABOS/ABOS1 ABOT*	D	1929	149A1.000, 831D1.000	M		☞4	06/84 ▸ 04/89	7625346	**819963**	80	Y
Thema													
2.0 i,2000 ie,2000 ie 16V 2000 ie Turbo	*834/AB/AB54A/AI/B/BV/C CPF/CV/FB54A*	E	1995	834C.000, 834B.000, 834B2.246 834B1.000, 834B.146 834C1.146	M		☞8	10/84 ▸ 11/94	7656567	**819882**	81	Y
2000 ie	*834BA*	E	1995	834B.000	A		☞8	10/84 ▸ 09/88	7656567	**819882**	81	Y
2800	*834EA, 834EA1P*	E	2849	834E.000	A			11/84 ▸	7910247116	**819872**	79	Y
2800	*834EP, 834E*	E	2849	834E.000	M			11/84 ▸	7910247116	**819872**	79	Y
2400 TD	*834/D/DPF*	D	2445	8144-81	M			10/84 ▸ 09/88	7574911	**819940**	85	Y
Thesis													
2.0 i Turbo 20V	*841AXA1B0*	E	1998	841E.000	M		☞6	09/02 ▸	46804764	**820587**	88	Y
2.4 i 20V	*841AXB1B0*	E	2446	841D.000	M		☞6	09/02 ▸	46804764	**820587**	88	Y
2.4 i 20V	*841AXB110*	E	2446	841D.000	A		☞6	09/02 ▸	46804764	**820587**	88	Y
2.4 JTD	*841AXD1B0*	D	2387	841C.000	M			09/02 ▸	60816681	**820562**	88	Y
2.4 JTD 20V	*841AXE1B0*	D	2387	841G.000	M			09/03 ▸	55189845	**820578**	88	Y
2.4 JTD 20V	*841AXH110*	D	2387	841G.000	A			09/03 ▸	55189845	**820578**	88	Y
Y Ipsilon (95>2000)													
1.1 i	*840AE1A*	E	1108	176B2.000	M		☞1,4	04/97 ▸	7589135	**819938**	87	Y
1.2 i,1.2 i 16V	*840/AA/AA1A/AD1A*	E	1242	840A3.000, 176B9.000	M		☞1,4	11/95 ▸	7589135	**819938**	87	Y
1.2 i	*840AA1AA*	E	1242	840A3.000	A		☞1,4	11/95 ▸	7589135	**819938**	87	Y
1.4 i	*840/AB1A/AC1A*	E	1370	840A2.000, 840A4.000	M			11/95 ▸	46417962	**820452**	88	Y
Y Ipsilon (2000>2003)													
1.2 i,1.2 i 16V	*840/AF1A/AG1A*	E	1242	188A4.000, 188A5.000	M		☞1,4	09/00 ▸	46523118	**819938**	87	Y
Ypsilon (2003>)													
1.2 i,1.2 i 16V	*843/AXA1A/AXB1A*	E	1242	188A5.000, 188A4.000	M		☞1,4	10/03 ▸	46523118	**819938**	87	Y
1.4 i 16V	*843AXC1A*	E	1368	843A1.000	M		☞1,4	10/03 ▸	46523118	**819938**	87	Y
1.4 i	*843AXG1A*	E	1368	350A1.000	M			01/06 ▸	55202176	**820935**	88	Y
1.3 MJTD 16V	*843AXD11*	D	1248	188A9.000	A			10/03 ▸	55180041	**820563**	88	Y
1.3 MJTD 16V	*843AXD1A*	D	1248	188A9.000	M			10/03 ▸	55180041	**820563**	88	Y
Y10													
1.0,1.0 ie	*156/AA53A/AA53W/AD53A AE53A/AE53W*	E	999	156A2.000, 156A2.246 156A2.100	M		☞1,4	01/89 ▸ 09/92	7589135	**819938**	87	Y
1.1 ie	*156/AC53A/AC53W/AG53A AG53F/AG53W/AH53A/AH53W BG53A/BH53A/CG53A*	E	1108	176B2.000, 156C.046, 156C.000	M		☞1,4	01/89 ▸ 10/95	7589135	**819938**	87	Y

• **New** Nouveau **Nuevo** Novo **Nuovo** Nieuw **Neu** Yeni Новый Nou

			CC			AC			OE	Valeo	(°)C	
LANCIA (.../...)												
Y10 (.../...)												
1.1 ie	*156/AC13A/AG13A/AH13A*	E	1108	156C.000, 156C.046, 176B2.000	A		☞1,4	11/89 ▸ 10/95	7589135	**819938**	87	Y
Zeta												
2.0 ie 16V	*220/AQ4/AQ5*	E	1997	EW10J4/L4	M			01/01 ▸ 08/02	9630066680	**820431**	89	Y
2.0 ie 16V	*220/AQ4/AQ5*	E	1997	EW10J4/L4	M			01/01 ▸ 08/02	9630066780	**820434**	89	Y
2.0 ie 16V	*220AQ4*	E	1997	EW10J4/L4	A			01/01 ▸ 08/02	9630066780	**820434**	89	Y
2.0 ie 16V	*220AL5*	E	1998	RFV	M			07/98 ▸ 12/00	9616090280	**820471**	83	Y
2.0 JTD,2.0 JTD 16V	*220/AN5/AR500L*	D	1997	DW10ATED4, DW10ATED/L4	M		☞4	01/00 ▸ 08/02	9616090180	**819950**	83	Y
2.1 TD	*220AJ5*	D	2088	P8C	M		☞4	03/96 ▸ 12/00	9616090180	**819950**	83	Y
LAND ROVER												
Defender 90 - 110												
2.5	*LDH/AD7/AD8/HD7/HD8/MD7/MD8, LDV AD7/AD8/BD7/BD8*	E	2494	17H	M		☞8	10/90 ▸	ETC4761	**820485**	74	Y
2.5	*LDH/AD7/AD8/HD7/HD8/MD7/MD8, LDV AD7/AD8/BD7/BD8*	E	2494	17H	M		☞8	10/90 ▸	ETC4763	**820486**	82	Y
3.5 V8	*LDH/AV7/AV8/HV7/HV8/MV7 MV8, LDK/AV7/AV8/HV7/HV8 LDV/AV7/AV8/BV7/BV8*	E	3532	20G	M		☞8	10/90 ▸	ETC4763	**820486**	82	Y
2.5 TDi	*LDH/A67/A68/AF7/AF8/H67 H68/HF7/HF8/M67/M68/MF7 MF8, LDK/AF7/AF8/HF7/HF8 LDV/A68/AF7/AF8/B68/BF7 BF8*	D	2494	11L, 16L	M		☞1,4	10/90 ▸	ERR3291	**820487**	88	N
2.5 D	*LDH/AC7/AC8/HC7/HC8/MC7/MC8, LDV AC7/AC8/BC7/BC8*	D	2495	12J	M		☞8	10/90 ▸	ETC4761	**820485**	74	Y
2.5 D	*LDH/AC7/AC8/HC7/HC8/MC7/MC8, LDV AC7/AC8/BC7/BC8*	D	2495	12J	M		☞8	10/90 ▸	ETC4763	**820486**	82	Y
2.5 Td5	*LD/, LDH/AW/BW, LDK/AW/BW LDV/A58/F58/H58*	D	2495	TD5	M			06/98 ▸ 04/07	PEM100990	●**820955**	92	N
Discovery (89>94)												
2.0 i	*LGM/Y7/Y8*	E	1994	20T4HG	M		☞1	06/93 ▸	ERR2803	**820074**	89	Y
3.5 V8	*LJG/BV7/BV8*	E	3528	27G	M		☞8	09/89 ▸ 08/93	ETC4765	**820488**	88	Y
3.5 i V8	*LJG/BL7/BL8/ML7/ML8*	E	3532	24D, 22D	M		☞8	09/89 ▸ 08/93	ETC4765	**820488**	88	Y
3.5 i V8	*LJG/BL3/BL4/ML3/ML4*	E	3532	22D, 24D	A		☞8	10/92 ▸ 08/93	ETC4765	**820488**	88	Y
3.9 i V8	*LGJ/BM7/BM8/MM7/MM8*	E	3947	36D	M		☞8	09/93 ▸	ETC4765	**820488**	88	Y
2.5 TDi	*LJG/BF7/BF8/MF7/MF8*	D	2495	17L	M		☞1,4	09/89 ▸	ERR3291	**820487**	88	N
2.5 TDi	*LJG/BF3/BF4/MF3/MF4*	D	2495	19L	A		☞1,4	10/92 ▸	ERR3291	**820487**	88	N
Discovery (94>98)												
3.9 i V8	*LGJ/BM7/BM8/MM7/MM8*	E	3947	36D	M		☞8	03/94 ▸ 07/97	ETC4765	**820488**	88	Y
3.9 i V8		E	3950	35D-182	M		☞8	07/97 ▸ 11/98	ETC4765	**820488**	88	Y
2.5 TDi	*LJG//BF7/BF8/MF7/MF8*	D	2495	17L,17L-122	M			03/94 ▸ 08/98	ERR3291	**820487**	88	N
2.5 TDi	*LJG//BF3/BF4/MF3/MF4*	D	2495	19L,19L-122	A			03/94 ▸ 08/98	ERR3291	**820487**	88	N
Discovery (98>2004)												
4.0 i V8 16V ▸ 5A476242		E	3950	35D-185	M			11/98 ▸	PEM100990	●**820955**	92	N
4.0 i V8 16V ▸ 5A476242		E	3950	35D-185	A			11/98 ▸	PEM100990	●**820955**	92	N
2.5 Td5 ▸ 5A476242		D	2496	STORM-TD5	M			11/98 ▸ 11/04	PEM100990	●**820955**	92	N
2.5 Td5 ▸ 5A476242		D	2496	STORM-TD5	A			11/98 ▸ 11/04	PEM100990	●**820955**	92	N
Freelander (97>)												
1.8 i, 1.8 i 16V	*LNAAA7, LNABA8, LNAAA8 LNABA7*	E	1795	18K4, 18K4FK	M			09/00 ▸	PEL10016	**820056**	88	Y
2.0 D	*LNA//AB7/AB8/BB7/BB8*	D	1994	20L4D	M			10/97 ▸ 09/00	PEM101020	●**820955**	92	N
Land 90 Series I - II - III												
2.3	*LDV/AH7/AH8/BH7/BH8*	E	2286	11H	M		☞8	06/84 ▸ 1987	ETC4763	**820486**	82	Y

• **New** Nouveau **Nuevo** Novo **Nuovo** Nieuw **Neu** Yeni Новый Nou

Type Ctr.		cc		AC			OE	Valeo	(°)C	
LEXUS (.../...)										
LS400 (89>94) (.../...)										
4.0 i V8 32V *JTA53, JT153, JTB53*	E	3969	1UZ-FE	A		12/89 ▸ 07/97	9091603084	**820512**	82	Y
LS400 (94>2000)										
4.0 i V8 32V *JTB53, JT153, JTA53*	E	3969	1UZ-FE	A	☞4,9	10/94 ▸ 07/97	9091603129	**820136**	82	Y
4.0 i V8 32V *JTA53, JT153, JTB53*	E	3969	1UZ-FE	A	☞4,9	07/97 ▸ 08/00	9091603100	**820513**	82	Y
LS430										
4.3 i V8 32V *JTHBN*	E	4293	3UZ-FE	A	☞4,9	08/00 ▸	9091603100	**820513**	82	Y
LX470										
4.7 i V8 32V *JTJHT*	E	4664	2UZ-FE	A	☞4,9	08/02 ▸	9091603100	**820513**	82	Y
RX 300										
3.0 i V6 24V *MCU35*	E	2995	1MZ-FE	A	☞4,9	02/03 ▸ 01/06	9091603129	**820136**	82	Y
3.0 i V6 24V *MCU35*	E	2995	1MZ-FE	A		02/03 ▸	9091603084	**820512**	82	Y
RX 400										
3.3 i V6 24V *MHU38*	E	3311	3MZFE	A	☞4,9	03/05 ▸	9091603129	**820136**	82	Y
SC430										
4.3 i V8 32V *UZZ40*	E	4293	3UZ-FE	A	☞4,9	05/01 ▸	9091603100	**820513**	82	Y
MARUTI										
800										
0.8,0.8 i	E	796	SUZUKI-F,SUZUKI-FI	M		10/87 ▸	1760082810	**819842**	80	Y
0.8,0.8 i	E	796	SUZUKI-F, SUZUKI-FI	M	☞7,8	10/87 ▸	1767082000	**820438**	82	Y
MAZDA										
3 (2003>2009)										
1.6 DE 16V *BK14Y2, BK1432, BK12Y2 BK1462, BK1232*	D	1560	MZ-CD16,MZ16CD,MZ16CD/F	M		06/03 ▸ 12/09	Y6021517X	●**820951**	83	Y
121 Cosmo (CD) (75>79)										
1.8 *CD2VC-*	E	1769	VC	A	☞7,8	10/75 ▸ 12/79	8AK115171	**820191**	88	Y
1.8 *CD2VC*	E	1769	VC	M	☞7,8	10/75 ▸ 12/79	8AK115171	**820191**	88	Y
2.0 *CD3MC-*	E	1970	MA	A	☞7,8	03/77 ▸ 12/79	8AK115171	**820191**	88	Y
2.0 *CD/3MC/3MC-*	E	1970	MA	M	☞7,8	03/77 ▸ 12/79	8AK115171	**820191**	88	Y
121 (DA) (88>90)										
1100 *DA/1321/1322* 214076 ▸	E	1139	B1-15	M	☞7,8	06/89 ▸ 10/90	8AB715171	**819942**	82	Y
1100 *DA/1321/1322* ▸ 214075	E	1139	B1-15	M	☞7,8	01/88 ▸	HE4199152C	**820963**	88	N
1300 *DA/1332/13B2* 214076 ▸	E	1324	B3-A5, B3-B1	M	☞7,8	06/89 ▸ 10/90	8AB715171	**819942**	82	Y
1300 *DA/1332/13B2* ▸ 214075	E	1324	B3-B1, B3-A5	M	☞7,8	01/88 ▸	HE4199152C	**820963**	88	N
121 (DB) (90>96)										
1.1 *DB12A2*	E	1139	B1-21	M	☞7,8	11/90 ▸ 10/93	8AG415171	**820963**	88	N
1.3,1.3 i *DB/12B2/12C2/12D2*	E	1324	B3-D1, B3-C9, B3-D2	M	☞7,8	11/90 ▸ 02/96	8AG415171	**820963**	88	N
1.3,1.3 i *DB/12C5/12D5*	E	1324	B3-D3	A	☞7,8	11/90 ▸ 02/96	8AG415171	**820963**	88	N
1.3 i *DB12D5*	E	1324	B3-D3	A	☞4,8	11/93 ▸ 02/96	8AZ415171	**820044**	82	Y
121 (JA/JB)										
1.8 D *JASMRT, JBSMRT*	D	1753	RTK	M		03/96 ▸	1E0715171	**820475**	88	Y
323 (FA) (76>81)										
1.0 *FA4PS-* 525739 ▸	E	985	PC	M	☞7,8	04/78 ▸ 05/81	812415171	**820963**	88	N

• **New** Nouveau **Nuevo** Novo **Nuovo** Nieuw **Neu** Yeni Новый Nou

			Type Ctr.		CC			AC		2 3	OE	Valeo	(°)C	
MAZDA (.../...)														
323 (FA) (76>81) (.../...)														
1.0	*FA4PS-*	E		985	PC	M		☞7,8	12/76 ▸ 04/78	8AK115171	**820191**	88	Y
▸525738														
1.3	*FA/4TS-/4TV-*	E		1272	TC	M		☞7,8	04/78 ▸ 05/81	812415171	**820963**	88	N
729693 ▸														
1.3	*FA4TS-*	E		1272	TC	A		☞7,8	04/78 ▸ 05/81	812415171	**820963**	88	N
729693 ▸														
1.3	*FA4TS-*	E		1272	TC	M		☞7,8	12/76 ▸ 04/78	8AK115171	**820191**	88	Y
▸729692														
1.3	*FA4TS-*	E		1272	TC	A		☞7,8	12/76 ▸ 04/78	8AK115171	**820191**	88	Y
729692 ▸														
1.4	*FA4US-*	E		1415	UC	M		☞7,8	05/78 ▸ 05/81	812415171	**820963**	88	N
1.4	*FA4US-*	E		1415	UC	A		☞7,8	05/78 ▸ 05/81	812415171	**820963**	88	N
323 (BD) (80>85)														
1.1	*BD/1011/1012/1211/1301/1311/1411*	E		1071	E1	M		☞7,8	08/80 ▸ 08/84	817315171	**820963**	88	N
1.3	*BD/1032/1221/1222/1232/1322/1331 1332/1421/1422/1431/1432*	E		1296	E3	M		☞7,8	09/82 ▸ 08/84	817315171	**820963**	88	N
1.3	*BD/1323/1333/1433*	E		1296	E3	A		☞7,8	09/82 ▸ 08/84	817315171	**820963**	88	N
1.5	*BD/1051/1052/1241/1242/1252/1341 1342/1352/1442/1452*	E		1490	E5, E5-HP	M		☞7,8	08/80 ▸ 08/84	817315171	**820963**	88	N
1.5	*BD/1052/1243/1343/1443*	E		1490	E5	A		☞7,8	09/82 ▸ 08/84	817315171	**820963**	88	N
323 (BF) (85>89)														
1.1	*BF/1231/1331/1431*	E		1071	E1	M		☞7,8	01/85 ▸ 1987	HE4199152C	**820963**	88	N
1.3	*BF/1251/1252/1451/1452*	E		1296	E3	M		☞7,8	01/85 ▸ 1987	HE4199152C	**820963**	88	N
1.3	*BF/1353/1453*	E		1296	E3	A		☞7,8	01/85 ▸ 1987	HE4199152C	**820963**	88	N
1.3	*BF/12B2/13B2/14B2*	E		1324	B3-84	M		☞7,8	09/87 ▸ 1989	HE4199152C	**820963**	88	N
1.3	*BF14B3*	E		1324	B3-84	A		☞7,8	09/87 ▸ 1989	HE4199152C	**820963**	88	N
1.5	*BF/1261/1262/1462*	E		1490	E5	M		☞7,8	01/85 ▸ 1987	HE4199152C	**820963**	88	N
1.5	*BF1463*	E		1490	E5	A		☞7,8	01/85 ▸ 1987	HE4199152C	**820963**	88	N
1.5	*BF/12C2/14C2*	E		1498	B5	M		☞7,8	09/87 ▸ 1989	HE4199152C	**820963**	88	N
1.5	*BF13C2*	E		1498	B5	A		☞7,8	09/87 ▸ 1989	HE4199152C	**820963**	88	N
1.6,1.6 i Turbo	*BF/1282/1312/1382/8312*	E		1598	B6, B6T	M		☞7,8	07/85 ▸ 1989	HE4199152C	**820963**	88	N
1.7 D	*BF/1292/1492*	D		1720	PN46	M		☞8	09/86 ▸ 1989	8AB415171A	**819882**	81	Y
323 (BG) (89>94)														
1.3	*BG/1222/12C2/1322/13C2*	E		1324	B3-86, B3-84	M		☞7,8	06/89 ▸ 05/94	8AB715171	**819942**	82	Y
1.3	*BG/1223/12B3/1323/13B3*	E		1324	B3-85, B3-84, B3-87	A		☞7,8	06/89 ▸ 05/94	8AB715171	**819942**	82	Y
1.6	*BG/1242/12E2/1342/13E2/1442/14E2*	E		1598	B6I, B6	M		☞7,8	06/89 ▸ 05/94	8AB715171	**819942**	82	Y
1.6	*BG/1243/12E2/1443/14E5*	E		1598	B6, B6I	A		☞7,8	06/89 ▸ 05/94	8AB715171	**819942**	82	Y
1.8,1.8 i,1.8 i Turbo	*BG/1372/13G2/1472/14G2/83 8362/83H2/83J2*	E		1840	BPT, BP-106, BP, MAZDA01 BP-TH	M		☞7,8	06/89 ▸ 05/94	8AB715171	**819942**	82	Y
1.7 D	*BG/1292/1392*	D		1720	PN46	M		☞8	1989 ▸	8AB415171A	**819882**	81	Y
323 (BA) (94>96)														
1.3 i	*BA/1232/1332*	E		1324	B3-C9	M		☞7,8	06/94 ▸ 07/95	8ABC15171	**819942**	82	Y
1.3 i	*BA1332*	E		1324	B3-C9	M		☞7,8	06/94 ▸ 09/96	8AN115171	**820191**	88	Y
1.5 i	*BA/1252/1352/1452*	E		1489	Z5	M		☞4,8	06/94 ▸ 07/95	8AB915171	**820044**	82	Y
1.5 i	*BA/1252/1452*	E		1489	Z5	M		☞7,8	06/94 ▸ 07/95	8AB815171	**820191**	88	Y
1.5 i	*BA/1252/1352/1452*	E		1489	Z5	M		☞4,8	06/94 ▸ 09/96	8ABE15171	**820544**	88	Y
1.5 i	*BA/1255/1355*	E		1489	Z5	A		☞4,8	06/94 ▸ 07/95	8AB915171	**820044**	82	Y
1.5 i	*BA/1255/1355*	E		1489	Z5	A		☞4,8	06/94 ▸ 09/96	8ABE15171	**820544**	88	Y
1.5 i	*BA/1255/1355*	E		1489	Z5	A		☞7,8	06/94 ▸ 07/95	8AB815171	**820191**	88	Y
1.8 i 16V	*BA/12P2/13P2*	E		1840	BP-ZE	M		☞7,8	08/94 ▸ 09/96	8AB815171	**820191**	88	Y
1.8 i 16V	*BA14P2*	E		1840	BP-ZE	M		☞7,8	10/94 ▸ 07/95	8ABB15171	**820963**	88	N
1.8 i 16V	*BA14P2*	E		1840	BP-ZE	M		☞4,8	07/95 ▸ 09/96	8AB915171	**820044**	82	Y
1.8 i 16V	*BA14P2*	E		1840	BP-ZE	M		☞4,8	08/95 ▸ 09/96	8ABE15171	**820544**	88	Y
1.8 i 16V	*BA/12P5/13P5*	E		1840	BP-ZE	A		☞7,8	08/94 ▸ 09/96	8AB815171	**820191**	88	Y
1.8 i 16V	*BA/12P5/13P5*	E		1840	BP-ZE	A		☞4,8	08/95 ▸ 09/96	8AB915171	**820044**	82	Y
1.8 i 16V	*BA/12P5/13P5*	E		1840	BP-ZE	A		☞4,8	08/95 ▸ 09/96	8ABE15171	**820544**	88	Y
1.7 TD	*BA1272*	D		1686	4EE1	M		☞4,8	11/94 ▸ 09/96	Y70715171	**820152**	85	Y
323 (BA) (96>98)														
1.3 i 16V	*BA/1232/1532*	E		1324	B3-ME	M		☞7,8	10/96 ▸ 06/98	8AN115171	**820191**	88	Y

• **New** Nouveau **Nuevo** Novo **Nuovo** Nieuw **Neu** Yeni Новый Nou

Type Ctr.		cc		AC			OE	Valeo	(°)C	
MAZDA (.../...)										
323 (BA) (96>98) (.../...)										
1.5 i 16V	*BA/1252/1352/1552*	E	1489	Z5-DE	M	☞4,8	10/96 ▸ 06/98	8ABE15171	**820544**	88	Y
1.5 i 16V	*BA/1255/1355/1555*	E	1489	Z5-DE	A	☞4,8	10/96 ▸ 06/98	8ABE15171	**820544**	88	Y
1.6 i	*BA1262*	E	1598	B6-DA	M	☞4,8	02/97 ▸ 06/98	8AB915171	**820044**	82	Y
1.6 i	*BA1262*	E	1598	B6-DA	M	☞4,8	02/97 ▸ 06/98	8ABE15171	**820544**	88	Y
1.6 i	*BA1265*	E	1598	B6-DA	A	☞4,8	02/97 ▸ 06/98	8AB915171	**820044**	82	Y
1.6 i	*BA1265*	E	1598	B6-DA	A	☞4,8	02/97 ▸ 06/98	8ABE15171	**820544**	88	Y
1.8 i 16V	*BA/12P2/13P2*	E	1840	BP-ZE	M	☞4,8	10/96 ▸ 06/98	8ABE15171	**820544**	88	Y
1.8 i 16V	*BA/12P5/13P5*	E	1840	BP-ZE	A	☞4,8	10/96 ▸ 06/98	8ABE15171	**820544**	88	Y
323 (BJ) (98>2000)										
1.3 i 16V	*BJ//1432*	E	1324	B3-BJ	M	☞7,8	08/98 ▸ 09/00	8AK115171	**820191**	88	Y
1.5 i 16V	*BJ14L2*	E	1498	ZL	M	☞4,8	08/98 ▸ 09/00	8ABE15171	**820544**	88	Y
1.5 i 16V	*BJ14L5*	E	1498	ZL	A	☞4,8	08/98 ▸ 09/00	8ABE15171	**820544**	88	Y
323 (BJ) (2000>2003)										
1.3 i 16V	*BJ/1242/1342*	E	1324	B3-ME	M	☞7,8	10/00 ▸ 10/03	8AK115171	**820191**	88	Y
1.6 i 16V	*BJ/12M2/13M2*	E	1598	ZM-3	M	☞7,8	10/00 ▸ 10/03	BP6F15171A	**820963**	88	N
1.6 i 16V	*BJ/12M5/13M5*	E	1598	ZM-3	A	☞7,8	10/00 ▸ 10/03	BP6F15171A	**820963**	88	N
323 Wagon(BV) (83>85)										
1.3	*BV/2111/2211/2212/2311/2411*	E	1296	E3	M	☞7,8	08/83 ▸ 1985	HE4199152C	**820963**	88	N
1.5	*BV/2132/2232*	E	1490	E5	M	☞7,8	08/83 ▸ 1985	HE4199152C	**820963**	88	N
323 Wagon (BW) (86>93)										
1.3	*BW/1241/1242/1251/1252*	E	1296	E3-93, E3-91	M	☞7,8	01/86 ▸ 12/87	HE4199152C	**820963**	88	N
1.5	*BW1263*	E	1490	E5-K4	M	☞7,8	01/86 ▸ 08/86	8AB115171	**820191**	88	Y
1.5	*BW1262*	E	1490	E5-H5	M	☞7,8	01/86 ▸ 12/87	HE4199152C	**820963**	88	N
1.5	*BW1263*	E	1490	E5-J9	A	☞7,8	01/86 ▸ 12/87	HE4199152C	**820963**	88	N
1.5	*BW/12C2/12J2*	E	1498	B5-05, B5-05C	M	☞7,8	09/89 ▸	8ABC15171	**819942**	82	Y
522608 ▸											
1.6	*BW/1272/8272*	E	1598	B6-5M	M	☞7,8	09/89 ▸	8ABC15171	**819942**	82	Y
522608 ▸											
1.6 i	*BW12*	E	1598	B6-82	M	☞7,8	10/86 ▸ 06/87	8AB115171	**820191**	88	Y
1.6	*BW1273*	E	1598	B6-89	A	☞7,8	06/86 ▸ 06/87	8AB115171	**820191**	88	Y
1.7 D	*BW1292*	D	1720	PN27	M	☞8	04/86 ▸ 06/87	8AB315171	**819852**	83	Y
1.7 D	*BW1292*	D	1720	PN-54	M	☞8	09/89 ▸	8AB415171A	**819882**	81	Y
616 (SN) (73>78)										
1.6	*SN/A-N/A-NB/A-NC*	E	1586	NA	M	☞7,8	09/73 ▸ 07/78	8AK115171	**820191**	88	Y
626 (CB) (78>80)										
1600	*CB/2NS7/2NS8*	E	1586	NA	M	☞7,8	10/78 ▸ 1982	8AK115171	**820191**	88	Y
1800	*CB/2VS7/2VS8*	E	1769	VC	M	☞7,8	10/78 ▸ 1982	8AK115171	**820191**	88	Y
2000	*CB/2MS7/2MS8*	E	1970	MA	M	☞7,8	10/78 ▸ 1982	8AK115171	**820191**	88	Y
626 (GB) (80>83)										
1600	*GB/1211/1212/1611/1612*	E	1586	NA	M	☞7,8	08/80 ▸ 1983	HE4115171	**819942**	82	Y
763382 ▸											
1600	*GB/1213/1613*	E	1586	NA	A	☞7,8	08/80 ▸ 1983	HE4115171	**819942**	82	Y
763382 ▸											
1600	*GB/1211/1212/1611/1612*	E	1586	NA	M	☞7,8	08/80 ▸	8AK115171	**820191**	88	Y
▸ 763381											
1600	*GB/1213/1613*	E	1586	NA	A	☞7,8	08/80 ▸	8AK115171	**820191**	88	Y
▸ 763381											
2000	*GB/1221/1222/1622*	E	1970	MA	M	☞7,8	08/80 ▸ 1983	HE4115171	**819942**	82	Y
763382 ▸											
2000	*GB/1223/1623*	E	1970	MA	A	☞7,8	08/80 ▸ 1983	HE4115171	**819942**	82	Y
763382 ▸											
2000	*GB/1221/1222/1622*	E	1970	MA	M	☞7,8	08/80 ▸	8AK115171	**820191**	88	Y
▸ 763381											
2000	*GB/1223/1623*	E	1970	MA	A	☞7,8	08/80 ▸	8AK115171	**820191**	88	Y
▸ 763381											
626 (GC) (82>87)										
1600	*GC/1211/1411/1412/1612*	E	1587	F6	M	☞7,8	11/82 ▸ 1987	817399152	**820963**	88	N

• **New** Nouveau **Nuevo** Novo **Nuovo** Nieuw **Neu** Yeni Новый Nou

			CC		AC				Valeo	(°)C	
MAZDA (.../...)											
626 (GC) (82>87) (.../...)											
1600 *GC/1213/1413/1613*	E	1587	F6	A		☞7,8	11/82 ▸ 1987	817399152	**820963**	88	N
2000 i *GC/12/1242/14/1442/1642*	E	1998	FE-EGI, FE-K	M		☞7,8	08/83 ▸ 1987	817399152	**820963**	88	N
2000 *GC1223*	E	1998	FE	A		☞7,8	11/82 ▸ 1987	817399152	**820963**	88	N
2000 D *GC/1232/1431/1432*	D	1998	RF	M		☞8	03/84 ▸ 1987	RF0199152	**819846**	88	Y
626 (GD) (87>92)											
1.6 *GD/1282/1482*	E	1587	F6-83	M		☞7,8	10/87 ▸ 01/92	8AG415171	**820963**	88	N
1.8 *GD/1212/1292/1412/1492*	E	1789	F8, F8-K9	M		☞7,8	10/87 ▸ 01/92	8AG415171	**820963**	88	N
1.8 *GD/1214/1294/1414/1494*	E	1789	F8-K8, F8	A		☞7,8	10/87 ▸ 01/92	8AG415171	**820963**	88	N
2.0,2.0 i,2.0 i 16V *GD/1232/12D2/12E2/1432 14D2/1632/16D2/16E2/72E2*	E	1998	FE-GA, FE-FK, FE-FN, FE-90	M		☞7,8	10/87 ▸ 01/92	8AG415171	**820963**	88	N
2.0,2.0 i *GD/1234/12D4/1434/14D4 1634*	E	1998	FE-90, FE-FK, FE-FJ, FE-GB	A		☞7,8	10/87 ▸ 01/92	8AG415171	**820963**	88	N
2.0 i 16V *GD/1252/1452/1652/7252 7452/7652* 617680 ▸ 533018	E	1998	FE-FL	M		☞7,8	10/87 ▸	8AK115171	**820191**	88	Y
2.2 i *GD/12H4/14H4/16H4* 533018 ▸	E	2184	F2-G4, F2-G3	A		☞7,8	08/89 ▸	8AK115171	**820191**	88	Y
2.2 i *GD/12H2/14H2/16H2/72H2/74H2/76H2 82H2/84H2* ▸ 533018	E	2184	F2-G4, F2-G2, F2-G7	M		☞7,8	08/89 ▸	8AK115171	**820191**	88	Y
2.0 D *GD/1262/1462*	D	1998	RF-D1	M			10/87 ▸ 01/92	8AG215171A	**820072**	88	Y
626 (GE) (91>97)											
2.0 D *GE/1242/1442* 215738 ▸	D	1998	RF-G5	M		☞7,8	03/92 ▸	8AG715171	**820191**	88	Y
2.0 D *GE1242* ▸ 215738	D	1998	RF-G5	M			03/92 ▸	8AG115171	**820072**	88	Y
626 (GV) (88>92)											
1800 *GV/1212/1292*	E	1789	F8-K9	M		☞7,8	10/88 ▸ 02/92	8AG415171	**820963**	88	N
2000,2000 i *GV/1232/12D2*	E	1998	FE-GA, FE-FJ	M		☞7,8	10/88 ▸ 02/92	8AG415171	**820963**	88	N
2000 *GV1234*	E	1998	FE-FK	A		☞7,8	10/88 ▸ 02/92	8AG415171	**820963**	88	N
2000 i 16V *GV/1252/12E2* 202565 ▸ 215021	E	1998	FE-FN, FE-FL	M		☞7,8	10/88 ▸	8AK115171	**820191**	88	Y
2200 i *GV/12H2/72H2* 202565 ▸	E	2184	F2-G2, F2-L1	M		☞7,8	09/90 ▸	8AK115171	**820191**	88	Y
2000 D *GV1262*	D	1998	RF-D1	M			10/88 ▸ 02/92	8AG215171A	**820072**	88	Y
626 (GV) (92>97)											
2.0 i *GV12D2*	E	1998	FE-Y8	M		☞7,8	03/92 ▸	8AG415171	**820963**	88	N
2.0 i 16V *GV12E2* ▸ 309043	E	1998	FE-KD	M		☞7,8	03/92 ▸	8AG515171	**820191**	88	Y
2.2 i *GV/12H2/82H2*	E	2184	F2-Y4, F2-G6	M		☞7,8	03/92 ▸	8AK115171	**820191**	88	Y
2.2 i *GV12H5*	E	2184	F2-M2	A		☞7,8	03/92 ▸	8AK115171	**820191**	88	Y
2.0 D Comprex *GV1272* 306434 ▸	D	1998	RF-G5	M		☞7,8	03/92 ▸ 10/97	8AG715171	**820191**	88	Y
2.0 D,2.0 D Comprex *GV/1262/1272* 306434 ▸	D	1998	RF-H7, RF-G5	M			03/92 ▸	8AG815171	**820072**	88	Y
818											
1.3 *STC-DC*	E	1272	STC	A		☞7,8	10/75 ▸ 09/78	8AK115171	**820191**	88	Y
1.3 *ST/C/C-DC/C-DX/C-SC/CV-D*	E	1272	STC	M		☞7,8	10/75 ▸ 09/78	8AK115171	**820191**	88	Y
1.6 *SN/3A-D/3AV-/4A*	E	1586	NA	M		☞7,8	01/74 ▸ 09/79	8AK115171	**820191**	88	Y
929 (LA) (78>81)											
1800 *LA/2VS/2VS-/2W/2W-*	E	1769	VC	M		☞7,8	04/73 ▸ 1981	8AK115171	**820191**	88	Y
1800 *LA/2VS-/2W-*	E	1769	VC	A		☞7,8	04/73 ▸ 12/78	8AK115171	**820191**	88	Y
2000 *LA/2MS/4MS/4MS-/4MV*	E	1970	MA	M		☞7,8	07/78 ▸ 1981	8AK115171	**820191**	88	Y
2000 *LA/4MS-/4MV-*	E	1970	MA	A		☞7,8	07/78 ▸ 1981	8AK115171	**820191**	88	Y
2600 *LA42S-*	E	2616	12A	M		☞4,8	03/79 ▸ 1981	855315171	**820476**	82	Y
2200 D *LA4SS*	D	2184	S2D	M		☞7,8	08/80 ▸ 1981	8AK115171	**820191**	88	Y
929 (HB) (81>86)											
2000 *HV1212, HB/1211/1212/1612*	E	1970	MA	M		☞7,8	10/81 ▸ 08/86	HE4115171	**819942**	82	Y
2000 *HB/1213/1613*	E	1970	MA	A		☞7,8	10/81 ▸ 1984	HE4115171	**819942**	82	Y

• **New** Nouveau **Nuevo** Novo **Nuovo** Nieuw **Neu** Yeni Новый Nou

Type Ctr.		CC		AC		2 3	OE	Valeo	(°)C	
MAZDA (.../...)										
929 (HB) (81>86) (.../...)										
2000,2000 i *HB/1221/1222/1232/1622 1632*	E	1998	FE, FE-EGI	M		☞7,8	10/84 ▸ 08/86	HE4115171	**819942**	82	Y
2000,2000 i *HB/1224/1234/1624*	E	1998	FE, FE-EGI	A		☞7,8	10/84 ▸ 08/86	HE4115171	**819942**	82	Y
2000 *HA/14/15/16/17/18/20/26/40/41/43/45 47/49/50/73/74/75/76/77/78/80/86/87 88/89/96/97/98/99*	E	-		M		☞7,8	11/81 ▸ 08/86	HE4115171	**819942**	82	Y
2000 *HA/19/21/42/44/46/48/51/79/81*	E	-		A		☞7,8	11/81 ▸ 08/86	HE4115171	**819942**	82	Y
929 (HC) (86>91)										
2000 *HC1212*	E	1998	FE	M		☞7,8	10/84 ▸ 1987	8ABB15171	**820963**	88	N
2200,2200 i *HC/1222/1232/12C2*	E	2184	F2, F2-C, F2-EGI	M		☞7,8	09/86 ▸ 1992	8ABB15171	**820963**	88	N
2200,2200 i *HC/1224/1234*	E	2184	F2-EGI, F2	A		☞7,8	09/86 ▸ 1992	8ABB15171	**820963**	88	N
3000 i *HC/1124/1242/12D2*	E	2954	JE-C, JE	M		☞7,8	09/86 ▸ 1992	8AH115171B	**820963**	88	N
3000 i *HC12D5*	E	2954	JE-C	A		☞7,8	09/89 ▸ 1992	8AH115171B	**820963**	88	N
Demio										
1.3 i *DW/1/1922/1932*	E	1324	B3-2ELP, B3-2E, B3-2EL B3-2EN	M		☞7,8	05/98 ▸	8ABB15171A	**820963**	88	N
1.5 i	E	1498	ZL-75	M		☞4,8	04/00 ▸ 03/03	8ABE15171	**820544**	88	Y
1.5 i	E	1498	ZL-75	A		☞4,8	04/00 ▸ 03/03	8ABE15171	**820544**	88	Y
MX3										
1.6 i,1.6 i 16V *EC/13A2/13C2*	E	1598	B6-16V, B6-9J	M		☞7,8	03/91 ▸ 02/98	8AB815171	**820191**	88	Y
1.6 i *EC13C5*	E	1598	B6-9K	A		☞7,8	03/91 ▸ 01/94	8AB815171	**820191**	88	Y
MX5 (NA) (90>98)										
1.6 i *NA/18B2/18C2*	E	1598	B6-ZE, B6-9J	M		☞7,8	04/90 ▸ 02/98	8AB815171	**820191**	88	Y
1.8 i *NA18P2*	E	1840	BP-F1	M		☞7,8	09/93 ▸ 02/98	8AB815171	**820191**	88	Y
MX5 (NB) (98>2000)										
1.6 i 16V *NB1862*	E	1598	B6-4J	M		☞4,8	03/98 ▸ 08/00	8ABE15171	**820544**	88	Y
1.6 i 16V *NB1565*	E	1598	B6-4J	A		☞4,8	03/98 ▸ 08/00	8ABE15171	**820544**	88	Y
1.8 i,1.8 i 16V *NB/18P/18P2/18P6*	E	1840	BP-ZE, BP-ZE-146	M		☞4,8	03/98 ▸ 08/00	8ABE15171	**820544**	88	Y
1.8 i 16V *NB18P5*	E	1840	BP-ZE	A		☞4,8	03/98 ▸ 08/00	8ABE15171	**820544**	88	Y
MX5 (2000>)										
1.6 i 16V *NB1862*	E	1598	B6-4J	M		☞7,8	09/00 ▸ 03/05	BP6F15171A	**820963**	88	N
1.6 i 16V *NB1865*	E	1598	B6-4J	A		☞7,8	09/00 ▸ 03/05	BP6F15171A	**820963**	88	N
1.8 i 16V *NB/18P2/18P6*	E	1840	BP-5C	M		☞7,8	09/00 ▸ 03/05	BP6F15171A	**820963**	88	N
1.8 i 16V *NB18P5*	E	1840	BP-5C	A		☞7,8	09/00 ▸ 03/05	BP6F15171A	**820963**	88	N
RX5										
2.6 i *CD/22C/23C*	E	2616	12A, 13B	M		☞4,8	10/75 ▸ 12/79	855315171	**820476**	82	Y
2.6 i *CD/22C-/23C-*	E	2616	13B, 12A	A		☞4,8	10/75 ▸ 12/79	855315171	**820476**	82	Y
RX7 I (SA) (78>86)										
2.3 *SA22C2*	E	2293	12A	M		☞4,8	03/78 ▸ 1984	855315171	**820476**	82	Y
RX7 II (FC) (85>91)										
2.6 i,2.6 i Turbo *FC1832*	E	2616	13B	M		☞4,8	09/83 ▸ 1991	855315171	**820476**	82	Y
RX7 III (FD) (92>)										
2.6 i Twin Turbo *FD1332*	E	2616	13BREW	M		☞4,8	10/91 ▸	855315171	**820476**	82	Y
Tribute										
2.0 i 16V *CU/06B/07B/08B/0SB*	E	1989	YF	M			01/00 ▸ 12/03	YF0915171	**820547**	92	Y
Xedos 6										
1.6 i 16V *CA/12A/12A2*	E	1598	B6-9N, B6-9-113	M		☞7,8	02/92 ▸ 10/97	8AB815171	**820191**	88	Y
1.6 i 16V *CA12A5*	E	1598	B6-9N	A		☞7,8	02/92 ▸ 10/97	8AB815171	**820191**	88	Y
MAZDA										
B Pick-up (71>89)										
1.6 *BN2V*	E	1586	NA	M		☞7,8	03/71 ▸ 10/89	8AK115171	**820191**	88	Y

• **New** Nouveau **Nuevo** Novo **Nuovo** Nieuw **Neu** Yeni Новый Nou

MAZDA (.../...)

B Pick-up (89>99)

1.6	*UF1Y12*	E	1587	F6-91	M		☞7,8	11/89 ▸ 01/99	8AG415171	**820963**	88	N
2.0	*SR/2, UF/1U22/1Y22*	E	1998	FE-CL, FE-K	M		☞7,8	11/89 ▸ 01/99	8AG415171	**820963**	88	N
2.2 i	*UF/1UF2/1YF2*	E	2184	F2-L8	M		☞7,8	08/91 ▸ 01/99	8AG415171	**820963**	88	N
2.6 i	*UF2U52*	E	2555	G6-12	M		☞7,8	11/89 ▸ 01/90	8AN115171	**820191**	88	Y
2.6 i	*UF2UE2*	E	2606	G6-MPV	M		☞7,8	08/91 ▸ 01/99	8AN115171	**820191**	88	Y
2.2 D	*UF/1Y32/2U32*	D	2184	R2-G3, R2-G4	M			11/89 ▸	8AG115171	**820072**	88	Y
2.5 D	*UF*	D	2499	WL	M		☞7,8	03/98 ▸ 01/99	8AG415171	**820963**	88	N

E Fourgon (81>87)

1.3	*SA/04/06*	E	1272	TC	M		☞7,8	03/81 ▸ 12/83	812415171	**820963**	88	N
1.4	*SA02*	E	1415	UC	M		☞7,8	03/81 ▸ 12/87	812415171	**820963**	88	N
1.6	*BA/2N9, SA/05/07/08/09/10/12/13/14 15/37*	E	1586	NA	M		☞7,8	03/81 ▸ 03/84	812415171	**820963**	88	N
2.2 D	*ST13, SA/16/17/19/20/23*	D	2184	R2	M			03/81 ▸ 12/87	5E0115171	**820072**	88	Y

E Fourgon (87>)

2.0	*SD/1A22/1B22/1C22/1D22, SR/1J22*	E	1998	FE-CK, FE-BN, FE-EP	M		☞7,8	02/88 ▸	8AG415171	**820963**	88	N
715131 ▸ 715131	*1L22/1MZ2*											
2.2 D	*SR8J32*	D	2184	R2-TV	M			07/89 ▸ 04/91	8AG115171	**820072**	88	Y

MERCEDES

190 (201)

2.0	*201./022/.023*	E	1997	102.924, 102.938, 102.921	M		☞8	12/82 ▸ 1993	1102000515	**819873**	87	Y
2.0	*201.023*	E	1997	102.924	A		☞8	12/82 ▸ 1993	1102000515	**819873**	87	Y
2.3 i 16S	*201.034*	E	2299	102.983	M		☞8	08/84 ▸ 1989	1102000515	**819873**	87	Y
2.3 i 16S	*201.034*	E	2299	102.983	A		☞8	08/84 ▸ 1989	1102000515	**819873**	87	Y
2.5 i 16S	*201.036*	E	2463	102.991	A		☞8	07/89 ▸ 1993	1102000515	**819873**	87	Y
2.5 i 16S	*201.035*	E	2498	102.990	A		☞8	09/88 ▸ 1993	1102000515	**819873**	87	Y
2.0 D	*201.122*	D	1997	601.911	M		☞2,5	12/83 ▸ 1993	6012000015	**819970**	85	Y
2.0 D	*201.122*	D	1997	601.911	A		☞2,5	12/83 ▸ 1993	6012000015	**819970**	85	Y
2.5 D Turbo	*201.128*	D	2497	602.961	A		☞2,5	07/86 ▸ 1993	6022000015	**819969**	80	Y
2.5 D Turbo	*201.128*	D	2497	602.961	A		☞2,5	07/86 ▸ 1993	6012000015	**819970**	85	Y
2.5 D Turbo	*201.128*	D	2497	602.961	M		☞2,5	07/86 ▸ 1993	6022000015	**819969**	80	Y

200/300 (123)

200	*123.020*	E	1988	115.938/39	M		☞8	01/76 ▸ 07/80	1102000515	**819873**	87	Y
200,200T	*123/.220/.280*	E	1997	102.920, 102.939	M		☞8	01/76 ▸ 1985	1102000515	**819873**	87	Y
200	*123.220*	E	1997	102.920, 102.939	A		☞8	01/76 ▸ 1985	1102000515	**819873**	87	Y
230CE i,230E i,230TE i	*123/.223/.243/.283*	E	2299	102.980	M		☞8	06/80 ▸ 07/85	1102000515	**819873**	87	Y
230CE i,230E i,230TE i	*123/.223/.243/.283*	E	2299	102.980	A		☞8	06/80 ▸ 07/85	1102000515	**819873**	87	Y
230,230C,230T	*123/.000/.023/.043/.083*	E	2307	115.954	M		☞8	01/76 ▸ 02/81	1102000515	**819873**	87	Y
250,250L,250T	*123/.003/.026/.028/.086*	E	2525	123.920, 123.921	M		☞8	01/76 ▸ 1985	1102000515	**819873**	87	Y
250L	*123.028*	E	2525	123.921, 123.920	A		☞8	01/76 ▸ 1985	1102000515	**819873**	87	Y
280,280C,280CE i,280E 280EL i,280TE i	*123/.007/.030/.050/.053 .093*	E	2746	110.984, 110.923	M		☞8	01/76 ▸ 1985	1102000515	**819873**	87	Y
280,280C,280CE i	*123/.030/.050/.053*	E	2746	110.984, 110.923	A		☞8	01/76 ▸ 07/81	1102000515	**819873**	87	Y
280CE i,280E i	*123/.033/.053*	E	2749	110.988	M		☞8	01/76 ▸ 07/85	1102000515	**819873**	87	Y
280CE i,280E i	*123/.033/.053*	E	2749	110.988	A		☞8	01/76 ▸ 07/85	1102000515	**819873**	87	Y

200/300 (124)

200,200 CE i,200E i,200T 200TE i	*124/.020/.021/.041/.080 .081*	E	1997	102.963, 102.922	M		☞8	12/84 ▸ 09/92	1022001515	**819873**	87	Y
200,200 CE i,200E i,200T 200TE i	*124/.020/.021/.041/.080 .081*	E	1997	102.963, 102.922	A		☞8	12/84 ▸ 09/92	1022001515	**819873**	87	Y
200 CE i,200E i,200TE i	*124/.019/.040/.079*	E	1998	111.940	M		☞1	10/92 ▸ 06/93	1112000915	**820184**	87	Y
200 CE i,200E i,200TE i	*124/.019/.040/.079*	E	1998	111.940	A		☞1	10/92 ▸ 06/93	1112000915	**820184**	87	Y
220 CE i	*124.042*	E	2199	111.960	M		☞1	10/92 ▸ 06/93	1112000915	**820184**	87	Y
220 CE i	*124.042*	E	2199	111.960	A		☞1	10/92 ▸ 06/93	1112000915	**820184**	87	Y
230 CE i,230E i,230TE i	*124/.023/.043/.083*	E	2299	102.982	M		☞8	12/84 ▸ 09/92	1022001515	**819873**	87	Y
230 CE i,230E i,230TE i	*124/.023/.043/.083*	E	2299	102.982	A		☞8	12/84 ▸ 09/92	1022001515	**819873**	87	Y
260E i	*124/.026/.027/.226*	E	2599	103.943, 103.940	M		☞8	01/85 ▸ 09/92	1102000515	**819873**	87	Y
260E i	*124/.026/.027/.226*	E	2599	103.940, 103.943	A		☞8	06/85 ▸ 09/92	1102000515	**819873**	87	Y

• **New** Nouveau **Nuevo** Novo **Nuovo** Nieuw **Neu** Yeni Новый Nou

MERCEDES (.../...)

200/300 (124) (.../...)

280EL i	124.029	E	2799	104.942	M		☞8	10/92 ▸ 06/93	1102000515	**819873**	87	Y
280EL i	124.029	E	2799	104.942	A		☞8	10/92 ▸ 06/93	1102000515	**819873**	87	Y
300 CE i,300E i,300TE i	124/.030/.031/.050/.051 .061/.090/.091/.230/.290	E	2962	103.985, 104.980, 103.983 103.980	M		☞8	03/85 ▸ 06/93	1102000515	**819873**	87	Y
300 CE i,300E i,300TE i	124/.030/.031/.050/.051 .061/.090/.091/.230/.290	E	2962	104.980, 103.983, 103.985	A		☞8	03/85 ▸ 06/93	1102000515	**819873**	87	Y
320 CE i	124.052	E	3199	104.992	M		☞8	10/92 ▸ 06/93	1102000515	**819873**	87	Y
320 CE i	124.052	E	3199	104.992	A		☞8	10/92 ▸ 06/93	1102000515	**819873**	87	Y
400E i	124.034	E	4196	119.975	A		☞2	10/92 ▸	1162000315	**820494**	80	Y
500E i	124.036	E	4973	119.974	A		☞2	06/90 ▸	1162000315	**820494**	80	Y
200D D,200TD D	124/.120/.180	D	1997	601.912	M		☞2,5	12/84 ▸ 06/93	6012000015	**819970**	85	Y
200D D,200TD D	124/.120/.180	D	1997	601.912	A		☞2,5	12/84 ▸ 06/93	6012000015	**819970**	85	Y
250D D,250D TD,250DL D 250TD D,250TD TD	124/.125/.127/.128/.185 .188	D	2497	602.912, 602.962	M		☞2,5	12/84 ▸ 06/93	6012000015	**819970**	85	Y
250D TD,250TD TD	124/.128/.188	D	2497	602.962	M		☞2,5	09/88 ▸ 06/93	6022000015	**819969**	80	Y
250D D,250D TD,250DL D 250TD D,250TD TD	124/.125/.127/.128/.185 .188	D	2497	602.912, 602.962	A		☞2,5	12/84 ▸ 06/93	6012000015	**819970**	85	Y
250D TD,250TD TD	124/.128/.188	D	2497	602.962	A		☞2,5	09/88 ▸ 06/93	6022000015	**819969**	80	Y
300D D,300TD D	124/.130/.190/.330	D	2996	603.912, 603.913	M		☞2,5	12/84 ▸ 06/93	6012000015	**819970**	85	Y
300D D,300TD D,300TD TD	124/.130/.190/.330/.393	D	2996	603.963, 603.913, 603.912	A		☞2,5	12/84 ▸ 06/93	6012000015	**819970**	85	Y
300D TD,300TD TD	124/.133/.193/.333/.393	D	2996	603.960, 603.963	A		☞2,5	03/86 ▸ 06/93	6022000015	**819969**	80	Y

A Class (168) (97>2003)

A140 i	168/.031/.131	E	1397	166.940	M			05/97 ▸	1662030275	**820491**	87	Y
A140 i	168/.031/.131	E	1397	166.940	A			10/97 ▸	1662030275	**820491**	87	Y
A160 i	168/.033/.133	E	1598	166.960	M			05/97 ▸	1662030275	**820491**	87	Y
A160 i	168/.033/.133	E	1598	166.960	A			10/97 ▸	1662030275	**820491**	87	Y
A190 i	168/.032/.132	E	1898	166.990	M			04/99 ▸	1662030275	**820491**	87	Y
A190 i	168/.032/.132	E	1898	166.990	A			04/99 ▸	1662030275	**820491**	87	Y
A210 i	168/.035/.135	E	2084	166.995	M			01/02 ▸	1662030275	**820491**	87	Y
A210 i	168/.035/.135	E	2084	166.995	A			01/02 ▸	1662030275	**820491**	87	Y
A160CDI CDI,A170CDI CDI	168/.006/.007/.008/.009 .109	D	1689	668.940, 668.942, 668.941	M			05/98 ▸	6682030275	**820492**	87	Y
A160CDI CDI,A170CDI CDI	168/.006/.007/.008/.009 .109	D	1689	668.942, 668.941, 668.940	A			05/98 ▸	6682030275	**820492**	87	Y

A Class (169) (2004>)

A150 i	169/.031/.331	E	1498	266.920	M			07/04 ▸	2662030275	**820940**	87	Y
A150 i	169/.031/.331	E	1498	266.920	M			07/04 ▸	2662030275	**820940**	87	Y
A170 i	169/.032/.332	E	1699	266.940	M			07/04 ▸	2662030275	**820940**	87	Y
A170 i	169/.032/.332	E	1699	266.940	M			07/04 ▸	2662030275	**820940**	87	Y
A200 i	169/.033/.333	E	2034	266.960	M			07/04 ▸	2662030275	**820940**	87	Y
A200 i	169/.033/.333	E	2034	266.960	M			07/04 ▸	2662030275	**820940**	87	Y

B Class (2005>)

B150 i	245.231	E	1498	266.920	M			05/05 ▸	2662030275	**820940**	87	Y
B150 i	245.231	E	1498	266.920	M			05/05 ▸	2662030275	**820940**	87	Y
B170 i	245.232	E	1699	266.940	M			05/05 ▸	2662030275	**820940**	87	Y
B170 i	245.232	E	1699	266.940	M			05/05 ▸	2662030275	**820940**	87	Y
B200 i	245/.233/.234	E	2034	266.960, 266.980	M			05/05 ▸	2662030275	**820940**	87	Y
B200 i	245/.233/.234	E	2034	266.980, 266.960	M			05/05 ▸	2662030275	**820940**	87	Y

C Class (202) (93>2001)

1.8 i	202/.018/.078	E	1799	111.921, 111.920	M	+	☞1	03/93 ▸	1112000915	**820184**	87	Y
1.8 i	202/.018/.078	E	1799	111.921, 111.920	M			03/93 ▸	1112000315	**820147**	87	Y
1.8 i	202/.018/.078	E	1799	111.920, 111.921	A	+	☞1	03/93 ▸	1112000915	**820184**	87	Y
1.8 i	202/.018/.078	E	1799	111.920, 111.921	A			03/93 ▸	1112000315	**820147**	87	Y
2.0 i	202/.020/.025/.080/.081/.082/.087	E	1998	111.956, 111.944, 111.952 111.945, 111.941	M	+/-		01/94 ▸	1112000315	**820147**	87	Y
2.0 i	202/.020/.025/.080/.081/.082/.087	E	1998	111.944, 111.945, 111.941 111.952, 111.956	M	+/-	☞1	01/94 ▸	1112000915	**820184**	87	Y
2.0 i	202/.020/.025/.080/.081/.082/.087	E	1998	111.944, 111.956, 111.952 111.941, 111.945	A	+/-		01/94 ▸	1112000315	**820147**	87	Y

• **New** Nouveau **Nuevo** Novo **Nuovo** Nieuw **Neu** Yeni Новый Nou

Type Ctr.		E	CC			AC	☞	2 3	OE	Valeo	(°)C		
MERCEDES (.../...)													
C Class (202) (93>2001) (.../...)													
2.0 i	*202/.020/.025/.080/.081/.082/.087*	E	1998	111.944, 111.941, 111.956 111.945, 111.952	A	+/-	☞1	01/94 ▸	1112000915	**820184**	87	Y
2.2 i	*202.022*	E	2199	111.961	M	+	☞1	03/93 ▸	1112000915	**820184**	87	Y
2.2 i	*202.022*	E	2199	111.961	M			03/93 ▸	1112000315	**820147**	87	Y
2.2 i	*202.022*	E	2199	111.961	A	+	☞1	03/93 ▸	1112000915	**820184**	87	Y
2.2 i	*202.022*	E	2199	111.961	A			03/93 ▸	1112000315	**820147**	87	Y
2.3 i	*202/.023/.024/.083/.085*	E	2295	111.974, 111.975	M	+/-	☞1	08/95 ▸	1112000915	**820184**	87	Y
2.3 i	*202/.023/.024/.083/.085*	E	2295	111.974, 111.975	M	+/-		08/95 ▸	1112000315	**820147**	87	Y
2.3 i	*202/.023/.024/.083/.085*	E	2295	111.975, 111.974	A	+/-		08/95 ▸	1112000315	**820147**	87	Y
2.3 i	*202/.023/.024/.083/.085*	E	2295	111.974, 111.975	A	+/-	☞1	08/95 ▸	1112000915	**820184**	87	Y
2.4 i,2.4 i V6	*202/.026/.086*	E	2398	112.910	M		☞10	06/97 ▸ 02/01	1122030275	**820495**	87	Y
2.4 i,2.4 i V6	*202/.026/.086*	E	2398	112.910	A		☞10	06/97 ▸ 02/01	1122030275	**820495**	87	Y
2.6 i V6	*202.088*	E	2597	112.915	M		☞10	04/00 ▸ 02/01	1122030275	**820495**	87	Y
2.6 i V6	*202.088*	E	2597	112.915	A		☞10	04/00 ▸ 02/01	1122030275	**820495**	87	Y
2.8 i	*202/.028/.029/.089*	E	2799	104.941, 112.920	M		☞8	05/93 ▸	1102000515	**819873**	87	Y
2.8 i	*202/.028/.029/.089*	E	2799	104.941, 112.920	A		☞8	05/93 ▸	1102000515	**819873**	87	Y
2.8 i	*202/.029/.089*	E	2799	112.920	M		☞10	05/93 ▸ 02/01	1122030275	**820495**	87	Y
2.8 i	*202/.029/.089*	E	2799	112.920	A		☞10	05/93 ▸ 02/01	1122030275	**820495**	87	Y
3.6 i	*202.028*	E	3606	C36AMG	M		☞8	09/94 ▸ 02/00	1102000515	**819873**	87	Y
3.6 i	*202.028*	E	3606	C36AMG	M			09/94 ▸ 02/00	6112000015	●**820776**	87	Y
4.3 i,4.3 i V8	*202/.033/.093*	E	4266	113.944	A		☞10	10/97 ▸ 02/01	1122030275	**820495**	87	Y
2.0 D	*202.120*	D	1997	601.913	M		☞2,5	03/93 ▸	6012000015	**819970**	85	Y
2.0 D	*202.120*	D	1997	601.913	A		☞2,5	03/93 ▸	6012000015	**819970**	85	Y
2.0 D	*202/.122/.180*	D	1998	604.915	M		☞2,5	03/93 ▸	6012000015	**819970**	85	Y
2.0 D	*202/.122/.180*	D	1998	604.915	A		☞2,5	03/93 ▸	6012000015	**819970**	85	Y
2.2 CDI	*202/.133/.134/.193/.194*	D	2151	611.960A, 611.960	M		☞2,5	03/98 ▸	6012000015	**819970**	85	Y
2.2 CDI	*202/.133/.134/.193/.194*	D	2151	611.960, 611.960A	A		☞2,5	03/98 ▸	6012000015	**819970**	85	Y
2.2 CDI	*202/.133/.134/.193/.194*	D	2151	611.960,611.960A	M			03/98 ▸ 02/01	6112000015	●**820776**	87	Y
2.2 CDI	*202/.133/.134/.193/.194*	D	2151	611.960,611.960A	A			03/98 ▸ 02/01	6112000015	●**820776**	87	Y
2.2 D	*202/.121/.182*	D	2155	604.910	M		☞2,5	08/93 ▸	6012000015	**819970**	85	Y
2.2 D	*202/.121/.182*	D	2155	604.910	A		☞2,5	08/93 ▸	6012000015	**819970**	85	Y
2.5 D	*202.125*	D	2497	605.910	M		☞2,5	05/93 ▸	6012000015	**819970**	85	Y
2.5 TD	*202/.128/.188*	D	2497	605.960	M		☞2,5	09/95 ▸	6022000015	**819969**	80	Y
2.5 D	*202.125*	D	2497	605.910	A		☞2,5	05/93 ▸	6012000015	**819970**	85	Y
2.5 TD	*202/.128/.188*	D	2497	605.960	A		☞2,5	09/95 ▸	6022000015	**819969**	80	Y
C Class (203) (2000>2003)													
1.8 CGI 16V,1.8 i 16V	*203/.042/.043/.046/.240 .242/.243/.246/.740/.742 .746*	E	1796	271.942, 271.948, 271.940 271.946	M	+		06/02 ▸ 12/03	2712000015	**820941**	90	Y
1.8 CGI 16V,1.8 i 16V	*203/.042/.043/.046/.240 .242/.243/.246/.740/.742 .746*	E	1796	271.946, 271.942, 271.940 271.948	A	+		06/02 ▸ 12/03	2712000015	**820941**	90	Y
2.6 i V6 18V	*203/.061/.261*	E	2597	112.912	M		☞10	04/00 ▸	1122030275	**820495**	87	Y
2.6 i V6 18V	*203/.061/.081/.261/.281*	E	2597	112.916, 112.912	A		☞10	04/00 ▸	1122030275	**820495**	87	Y
3.2 i V6 18V	*203.764*	E	3199	112.946	M		☞10	09/02 ▸	1122030275	**820495**	87	Y
3.2 i V6 18V	*203/.064/.084/.264/.284 .764*	E	3199	112.946, 112.953	A		☞10	04/00 ▸	1122030275	**820495**	87	Y
2.1 CDI 16V	*203/.007/.207/.208*	D	2148	646.963, 646.962	M	+		02/01 ▸ 12/03	6462000015	**820571**	92	Y
2.1 CDI	*203/.004/.006/.204/.206 .706*	D	2148	611.962	M		☞1	04/00 ▸	6112000615	**820598**	92	Y
2.1 CDI 16V	*203/.007/.207/.208*	D	2148	646.963, 646.962	A	+		02/01 ▸ 12/03	6462000015	**820571**	92	Y
2.1 CDI	*203/.004/.006/.204/.206 .706*	D	2148	611.962	A		☞1	04/00 ▸	6112000615	**820598**	92	Y
2.7 CDI	*203/.016/.216*	D	2685	612.962	M		☞1	08/00 ▸	6112000615	**820598**	92	Y
2.7 CDI	*203/.016/.216*	D	2685	612.962	A		☞1	08/00 ▸	6112000615	**820598**	92	Y
C Class (203) (2004>)													
C160 i,C180 i,C200 i C200CGI CGI,C220CGI CGI C230 i	*203/.040/.042/.043/.046 .240/.242/.243/.246/.730 .740/.742/.743/.746*	E	1796	271.921,271.940,271.942 271.946,271.948	M			01/04 ▸	2712000015	**820941**	90	Y
C160 i,C180 i,C200 i C200CGI CGI,C220CGI CGI C230 i	*203/.040/.042/.043/.046 .240/.242/.243/.246/.730 .740/.742/.743/.746*	E	1796	271.921,271.940,271.942 271.946,271.948	A			01/04 ▸	2712000015	**820941**	90	Y

• **New** Nouveau **Nuevo** Novo **Nuovo** Nieuw **Neu** Yeni Новый Nou

Type Ctr.		cc		AC			OE	Valeo	(°)C	
MERCEDES (.../...)										
C Class (203) (2004>) (.../...)										
C240 i	203/.061/.261	E	2597	112.916	M	☞10	01/04 ▸ 08/07	1122030275	**820495**	87	Y
C240 i	203/.061/.081/.261/.281	E	2597	112.916	A	☞10	01/04 ▸ 08/07	1122030275	**820495**	87	Y
C320 i	203.764	E	3199	112.946	M	☞10	01/04 ▸	1122030275	**820495**	87	Y
C320 i	203/.064/.084/.264/.284/.764	E	3199	112.946,112.953	A	☞10	01/04 ▸	1122030275	**820495**	87	Y
C55AMG i	203/.076/.276	E	5439	113.988	A	☞10	01/04 ▸ 08/07	1122030275	**820495**	87	Y
C Class (204) (2007>)										
1.6 BE 16V,1.6 i 16V	204/.044/.045/.245	E	1597	271.910	M		04/08 ▸	2712000015	**820941**	90	Y
1.6 BE 16V,1.6 i 16V	204/.044/.045	E	1597	271.910	A		04/08 ▸	2712000015	**820941**	90	Y
1.8 i 16V	204/.041/.046/.241/.246	E	1796	271.950,271.952	M		01/07 ▸	2712000015	**820941**	90	Y
1.8 i 16V	204/.041/.046/.241/.246	E	1796	271.950,271.952	A		01/07 ▸	2712000015	**820941**	90	Y
CL Class (215) (99>2006)										
CL500 i	215.375	E	4966	113.960	A	☞10	08/99 ▸ 04/06	1122030275	**820495**	87	Y
CL55 i	215.373	E	5439	113.986	A	☞10	09/99 ▸ 04/06	1122030275	**820495**	87	Y
CLC (203) (2008>)										
1.8 i 16V	203/.741/.746	E	1796	271.946,271.957	M		03/08 ▸	2712000015	**820941**	90	Y
1.8 i 16V	203/.741/.746	E	1796	271.946,271.957	A		03/08 ▸	2712000015	**820941**	90	Y
2.1 CDI 16V	203/.707/.708	D	2148	646.962,646.963	M		03/08 ▸	6462000015	**820571**	92	Y
2.1 CDI 16V	203/.707/.708	D	2148	646.962,646.963	A		03/08 ▸	6462000015	**820571**	92	Y
CLK (208)										
CLK200 i	208/.335/.435	E	1998	111.945	M	+/-		06/97 ▸ 01/03	1112000315	**820147**	87	Y
CLK200 i,CLK200K i	208/.335/.344/.345/.435/.444/.445	E	1998	111.944, 111.956, 111.945	M	- +	☞1	06/97 ▸ 01/03	1112000915	**820184**	87	Y
CLK200 i,CLK200K i	208/.335/.344/.345/.435/.444/.445	E	1998	111.945, 111.944, 111.956	A	+/-	☞1	06/97 ▸ 01/03	1112000915	**820184**	87	Y
CLK200 i	208/.335/.435	E	1998	111.945	A	-		06/97 ▸ 01/03	1112000315	**820147**	87	Y
CLK230K i	208/.347/.348/.447/.448	E	2295	111.982, 111.975	M		☞1	06/97 ▸ 01/03	1112000915	**820184**	87	Y
CLK230K i	208/.347/.348/.447/.448	E	2295	111.975, 111.982	A		☞1	06/97 ▸ 01/03	1112000915	**820184**	87	Y
CLK320 i	208/.365/.465	E	3199	112.940	A		☞10	06/97 ▸ 01/03	1122030275	**820495**	87	Y
CLK (208) (97>2003)										
CLK430 i	208/.370/.470	E	4266	113.943	A		☞10	06/98 ▸ 01/03	1122030275	**820495**	87	Y
CLK55 i	208.374	E	5439	113.984	A		☞10	06/99 ▸ 02/02	1122030275	**820495**	87	Y
CLK (209)										
CLK 200,CLK 200 i	209/.342/.343/.442	E	1796	271.942, 271.940	M			03/02 ▸	2712000015	**820941**	90	Y
CLK 200,CLK 200 i	209/.342/.343/.442	E	1796	271.940, 271.942	A			03/02 ▸	2712000015	**820941**	90	Y
CLK 240 i	209/.361/.461	E	2597	112.912	M		☞10	03/02 ▸ 05/05	1122030275	**820495**	87	Y
CLK 240 i	209/.361/.461	E	2597	112.912	A		☞10	03/02 ▸ 05/05	1122030275	**820495**	87	Y
CLK 320 i	209/.365/.465	E	3199	112.955	A		☞10	03/02 ▸ 05/05	1122030275	**820495**	87	Y
CLK 500 i	209/.375/.475	E	4966	113.968	A		☞10	03/02 ▸	1122030275	**820495**	87	Y
CLK 55 AMG i	209/.376/.476	E	5439	113.987	A		☞10	03/02 ▸	1122030275	**820495**	87	Y
CLK 220 CDI	209.309	D	2148	646.966	M			06/05 ▸	6462000015	**820571**	92	Y
CLK 220 CDI	209.309	D	2148	646.966	A			06/05 ▸	6462000015	**820571**	92	Y
CLK 270 CDI	209.316	D	2685	612.967	M		☞1	03/02 ▸ 05/05	6112000615	**820598**	92	Y
CLK 270 CDI	209.316	D	2685	612.967	A		☞1	03/02 ▸ 05/05	6112000615	**820598**	92	Y
CLS (2004>2008)										
CLS500 i	219.375	E	4966	113.967	A		☞10	07/04 ▸ 01/08	1122030275	**820495**	87	Y
E Class (124)										
E200 i,E200T i	124/.019/.040/.060/.079	E	1998	111.940	M		☞1	07/93 ▸	1112000915	**820184**	87	Y
E200 i,E200T i	124/.019/.040/.060/.079	E	1998	111.940	A		☞1	07/93 ▸	1112000915	**820184**	87	Y
E220 i	124/.042/.062	E	2199	111.960	M		☞1	07/93 ▸	1112000915	**820184**	87	Y
E220 i	124/.042/.062	E	2199	111.960	A		☞1	07/93 ▸	1112000915	**820184**	87	Y
E280L i	124.029	E	2799	104.942	M		☞8	07/93 ▸ 09/95	1102000515	**819873**	87	Y
E280L i	124.029	E	2799	104.942	A		☞8	07/93 ▸ 09/95	1102000515	**819873**	87	Y
E300 i,E300T i	124/.230/.290	E	2962	103.985	M		☞8	07/93 ▸ 02/96	1102000515	**819873**	87	Y
E300 i,E300T i	124/.230/.290	E	2962	103.985	A		☞8	07/93 ▸ 02/96	1102000515	**819873**	87	Y
E320 i,E320T i	124/.052/.066/.092	E	3199	104.992	M		☞8	07/93 ▸	1102000515	**819873**	87	Y

• **New** Nouveau **Nuevo** Novo **Nuovo** Nieuw **Neu** Yeni Новый Nou

			CC		AC			OE	Valeo	(°)C		
MERCEDES (.../...)												
E Class (124) (.../...)												
E320 i,E320T i	*124/.052/.066/.092*	E	3199	104.992	A		☞8	07/93 ▸	1102000515	**819873**	87	Y
E36 AMG i,E36 i	*124/.052/.066*	E	3606	C36AMG	M		☞8	05/94 ▸	1102000515	**819873**	87	Y
E420 i	*124.034*	E	4196	119.975	A		☞2	01/93 ▸ 06/93	1162000315	**820494**	80	Y
E420 i	*124.034*	E	4196	119.975	A			07/93 ▸ 09/95	1192000015	**820979**	80	Y
E500 i	*124.036*	E	4973	119.974	A		☞2	01/93 ▸ 06/93	1162000315	**820494**	80	Y
E500 5.0 i V8 32V	*124.036*	E	4973	119.974	A			07/93 ▸ 09/95	1192000015	**820979**	80	Y
E200D D	*124.120*	D	1997	601.912	M		☞2,5	07/93 ▸ 09/95	6012000015	**819970**	85	Y
E200D D	*124.120*	D	1997	601.912	A		☞2,5	07/93 ▸ 09/95	6012000015	**819970**	85	Y
E250D D,E250DL D,E250TD D	*124/.126/.129/.186*	D	2497	605.911	M		☞2,5	07/93 ▸ 02/96	6012000015	**819970**	85	Y
E250TD TD	*124/.128/.188*	D	2497	602.962	M		☞2,5	07/93 ▸ 02/96	6022000015	**819969**	80	Y
E250D D,E250DL D,E250TD D	*124/.126/.129/.186*	D	2497	605.911	A		☞2,5	07/93 ▸ 02/96	6012000015	**819970**	85	Y
E250TD TD	*124/.128/.188*	D	2497	602.962	A		☞2,5	07/93 ▸ 02/96	6022000015	**819969**	80	Y
E300TD D	*124.191*	D	2996	606.910	M		☞2,5	07/93 ▸ 02/96	6012000015	**819970**	85	Y
E300TD D	*124.191*	D	2996	606.910	A		☞2,5	07/93 ▸ 02/96	6012000015	**819970**	85	Y
E300TD TD	*124/.133/.193/.333/.393*	D	2996	603.963, 603.960	A		☞2,5	07/93 ▸ 02/96	6022000015	**819969**	80	Y
E Class (210)												
E200 i,E200L i	*210/.045/.245/.248*	E	1998	111.947, 111.957	M		☞1	04/95 ▸ 03/03	1112000915	**820184**	87	Y
E200 i,E200L i	*210/.045/.245/.248*	E	1998	111.947, 111.957	A		☞1	04/95 ▸ 03/03	1112000915	**820184**	87	Y
E200 i	*210/.035/.235*	E	1998	111.942	M			04/95 ▸	1112000315	**820147**	87	Y
E200 i	*210/.035/.235*	E	1998	111.942	A			04/95 ▸	1112000315	**820147**	87	Y
E200 i	*210.048*	E	1998	111.957	M		☞10	06/99 ▸ 03/02	1122030275	**820495**	87	Y
E200 i	*210.048*	E	1998	111.957	A		☞10	06/99 ▸ 03/02	1122030275	**820495**	87	Y
E230 i	*210/.037/.237*	E	2295	111.970	M	+	☞1	04/95 ▸ 06/99	1112000915	**820184**	87	Y
E230 i	*210/.037/.237*	E	2295	111.970	M			04/95 ▸ 06/99	1112000315	**820147**	87	Y
E230 i	*210/.037/.237*	E	2295	111.970	A	+	☞1	04/95 ▸ 06/99	1112000915	**820184**	87	Y
E230 i	*210/.037/.237*	E	2295	111.970	A			04/95 ▸ 06/99	1112000315	**820147**	87	Y
E240 i	*210/.061/.261*	E	2398	112.911	M		☞10	04/95 ▸ 03/03	1122030275	**820495**	87	Y
E240 i	*210/.061/.261*	E	2398	112.911	A		☞10	04/95 ▸ 06/99	1122030275	**820495**	87	Y
E240 i	*210/.062/.262*	E	2597	112.914	M		☞10	06/99 ▸ 03/03	1122030275	**820495**	87	Y
E240 i	*210/.062/.262*	E	2597	112.914	A		☞10	06/99 ▸ 03/03	1122030275	**820495**	87	Y
E280 i,E280L i	*210/.063/.263/.663*	E	2799	112.921	M		☞10	04/95 ▸ 03/03	1122030275	**820495**	87	Y
E280 i,E280L i	*210/.063/.081/.263/.281 .663*	E	2799	112.921	A		☞10	04/95 ▸ 03/03	1122030275	**820495**	87	Y
E280 i,E280L i	*210/.053/.063/.263/.663*	E	2799	104.945, 112.921	M		☞8	04/95 ▸	1102000515	**819873**	87	Y
E280 i,E280L i	*210/.053/.063/.081/.263 .281/.663*	E	2799	112.921, 104.945	A		☞8	04/95 ▸	1102000515	**819873**	87	Y
E280 i	*210.053*	E	2799	104.945	A			04/95 ▸ 06/99	1112000315	**820147**	87	Y
E320 i	*210/.055/.065/.082/.265 .282*	E	3199	104.995, 112.941	A		☞8	04/95 ▸	1102000515	**819873**	87	Y
E320 i	*210/.065/.082/.265/.282*	E	3199	112.941	A		☞10	04/95 ▸ 03/03	1122030275	**820495**	87	Y
E420 4.2 i		E	4196	119985	A			04/95 ▸ 09/97	1192000015	**820979**	80	Y
E430 i	*210/.070/.083/.270/.283*	E	4266	113.940	A		☞10	03/96 ▸ 03/03	1122030275	**820495**	87	Y
E50 5.0 i V8 32V		E	4973	119.AMG	A			04/95 ▸ 09/97	1192000015	**820979**	80	Y
E55 i	*210/.074/.274*	E	5439	113.980	A		☞10	03/96 ▸ 03/02	1122030275	**820495**	87	Y
E200D D	*210.003*	D	1998	604.917	M		☞2,5	04/95 ▸ 06/99	6012000015	**819970**	85	Y
E200D D	*210.003*	D	1998	604.917	A		☞2,5	04/95 ▸ 06/99	6012000015	**819970**	85	Y
E200 CDI,E220 CDI	*210/.006/.007/.206*	D	2148	611.961	M		☞1	03/96 ▸ 03/03	6112000615	**820598**	92	Y
E200 CDI,E220 CDI	*210/.006/.007/.206*	D	2148	611.961	A		☞1	03/96 ▸ 03/03	6112000615	**820598**	92	Y
E200 CDI,E220 CDI	*210/.006/.007/.206*	D	2148	611.961	M			01/00 ▸ 03/03	6112000515	**●820800**	92	Y
E200 CDI,E220 CDI	*210/.006/.007/.206/.606*	D	2148	611.961	A			01/00 ▸ 03/03	6112000515	**●820800**	92	Y
E220D CDI	*210.007*	D	2151	611.961	M			01/00 ▸ 03/02	6112000515	**●820800**	92	Y
E220D CDI	*210.007*	D	2151	611.961	A			01/00 ▸ 03/02	6112000515	**●820800**	92	Y
E220D D	*210.004*	D	2155	604.912	M		☞2,5	04/95 ▸ 06/99	6012000015	**819970**	85	Y
E220D D	*210.004*	D	2155	604.912	A		☞2,5	04/95 ▸ 06/99	6012000015	**819970**	85	Y
E250TD TD	*210.015*	D	2497	605.962	M		☞2,5	04/95 ▸ 06/99	6022000015	**819969**	80	Y
E250D D,E250DL D E250TD TD	*210/.010/.210/.215/.610*	D	2497	605.912, 605.962	M		☞2,5	04/95 ▸ 06/99	6012000015	**819970**	85	Y
E250D D,E250DL D	*210/.010/.210/.610*	D	2497	605.912	A		☞2,5	04/95 ▸ 06/99	6012000015	**819970**	85	Y
E270 CDI	*210/.016/.216*	D	2685	612.961	M			06/99 ▸ 03/03	6112000515	**●820800**	92	Y
E270 CDI	*210/.216/.616*	D	2685	612.961	A			06/99 ▸ 03/03	6112000515	**●820800**	92	Y
E290TD TD,E290TDL TD	*210/.017/.217/.617*	D	2874	602.982	M		☞2,5	04/95 ▸ 06/99	6012000015	**819970**	85	Y
E290TD TD,E290TDL TD	*210/.017/.217/.617*	D	2874	602.982	A		☞2,5	04/95 ▸ 06/99	6012000015	**819970**	85	Y
E300D D	*210.020*	D	2996	606.912	M		☞2,5	04/95 ▸ 06/99	6012000015	**819970**	85	Y

• **New** Nouveau **Nuevo** Novo **Nuovo** Nieuw **Neu** Yeni Новый Nou

MERCEDES (.../...)

E Class (210) (.../...)

E300TD TD	*210/.025/225*	D	2996	606.962	A		☞2,5	04/95 ▸ 06/99	6022000015	**819969**	80	Y
E300D D,E300TD TD	*210/.020/225*	D	2996	606.912, 606.962	A		☞2,5	04/95 ▸ 06/99	6012000015	**819970**	85	Y

E Class (211) (2002>2006)

E 200 i	*211/.042/242*	E	1796	271.941	M			09/02 ▸	2712000015	**820941**	90	Y
E 200 i	*211/.042/242*	E	1796	271.941	A			09/02 ▸	2712000015	**820941**	90	Y
E 240 i	*211/.061/261*	E	2597	112.913	M		☞10	03/02 ▸ 05/05	1122030275	**820495**	87	Y
E 240 i	*211/.061/.080/.261/.280*	E	2597	112.913,112.917	A		☞10	03/02 ▸ 06/05	1122030275	**820495**	87	Y
E 320 i	*211/.065/.082/.265/.282*	E	3199	112.949,112.954	A		☞10	03/02 ▸ 03/06	1122030275	**820495**	87	Y
E 500 i	*211/.070/.083/.270/.283*	E	4966	113.967,113.969	A		☞10	03/02 ▸ 03/06	1122030275	**820495**	87	Y
E 200 CDI,E 220 CDI	*211/.004/.006/.206*	D	2148	646.951, 646.961	M			03/02 ▸	6462000015	**820571**	92	Y
E 200 CDI,E 220 CDI	*211/.004/.006/.206*	D	2148	646.961, 646.951	A			03/02 ▸	6462000015	**820571**	92	Y
E 270 CDI	*211/.016/216*	D	2685	647.961	M			03/02 ▸ 05/05	6462000015	**820571**	92	Y
E 270 CDI	*211/.016/216*	D	2685	647.961	A			03/02 ▸ 05/05	6462000015	**820571**	92	Y
E 320 CDI	*211/.026/226*	D	3222	648.961	A			03/02 ▸ 05/05	6462000015	**820571**	92	Y

E Class (211) (2006>2009)

1.8 i 16V	*211/.041/241*	E	1796	271.956	M			04/06 ▸	2712000015	**820941**	90	Y
1.8 i 16V	*211/.041/241*	E	1796	271.941	A			04/06 ▸	2712000015	**820941**	90	Y
2.1 CDI 16V	*211/.007/.008/.208*	D	2148	646.820, 646.821	M			04/06 ▸	6462000015	**820571**	92	Y
2.1 CDI 16V	*211/.007/.008/.208/.608*	D	2148	646.821, 646.820	A			04/06 ▸	6462000015	**820571**	92	Y

G Class (460)

2.0 i	*460/.216/.236/.237*	E	1997	102.964	M		☞8	05/86 ▸ 1989	1102000515	**819873**	87	Y
2.3 i	*460/.218/.227/.228/.229/.238/.239/.249*	E	2299	102.998, 102.987	M		☞8	06/82 ▸ 1989	1102000515	**819873**	87	Y
2.3 i	*460.229*	E	2299	102.998	A		☞8	11/79 ▸ 1989	1102000515	**819873**	87	Y
2.3	*460/.210/.220/.221/.230/.231/.241*	E	2307	115.973	M		☞8	03/79 ▸ 08/85	1102000515	**819873**	87	Y
2.7 i	*460/.212/.222/.223/.224/.232/.233/.243*	E	2746	110.994	M		☞8	11/79 ▸ 08/89	1102000515	**819873**	87	Y
2.7 i	*460.222*	E	2746	110.994	A		☞8	08/84 ▸ 08/89	1102000515	**819873**	87	Y
2.5 D	*460/.317/.328/.329/.337/.338*	D	2497	602.930	M		☞2,5	08/87 ▸ 1989	6012000015	**819970**	85	Y
2.5 D	*460/.317/.328/.337/.338*	D	2497	602.930	A		☞2,5	08/87 ▸ 1989	6012000015	**819970**	85	Y

G Class (463)

3.0 i	*463/.207/.227/.228*	E	2962	103.987	M		☞8	09/89 ▸	1102000515	**819873**	87	Y
3.0 i	*463/.207/.227/.228*	E	2962	103.987	A		☞8	09/89 ▸	1102000515	**819873**	87	Y
3.2 i	*463/.208/.230/.231*	E	3199	104.996	A		☞8	10/93 ▸	1102000515	**819873**	87	Y
3.2 i V6 18V	*463/.232/.233/.244/.245/.250*	E	3199	112.945	A		☞10	07/97 ▸	1122030275	**820495**	87	Y
5.0 i V8 24V	*463/.206/.240/.241/.247/.248/.254*	E	4966	113.962	A		☞10	04/98 ▸	1122030275	**820495**	87	Y
5.0 i	*463.228*	E	4973	117.965	A		☞2	01/92 ▸ 07/93	1162000315	**820494**	80	Y
5.4 i V8 24V	*463.243*	E	5439	113.982	A		☞10	04/99 ▸	1122030275	**820495**	87	Y
2.5 D	*463/.304/.324/.325*	D	2497	602.931	M		☞2,5	09/89 ▸	6012000015	**819970**	85	Y
2.9 D	*461/.323/.328/.329/.337/.338/.341/.367/.368*	D	2874	602.942	M		☞2,5	01/92 ▸	6012000015	**819970**	85	Y
3.0 TD	*463/.307/.327/.328*	D	2996	603.931	M		☞2,5	09/89 ▸	6012000015	**819970**	85	Y
3.0 TD	*463/.307/.327/.328*	D	2996	603.931	A		☞2,5	09/89 ▸	6012000015	**819970**	85	Y
3.0 TD	*463/.308/.330/.331*	D	2996	606.964	A		☞2,5	09/96 ▸	6022000015	**819969**	80	Y
3.5 TD	*463/.300/.320/.321*	D	3449	603.972	M		☞2,5	09/91 ▸ 08/96	6022000015	**819969**	80	Y

M Class (163)

ML230 i	*163.136*	E	2295	111.977	M		☞1	10/97 ▸	1112000915	**820184**	87	Y
ML320 i	*163.154*	E	3199	112.942	A		☞10	05/97 ▸	1122030275	**820495**	87	Y
ML350 i	*163.157*	E	3724	112.970	A		☞10	09/00 ▸ 03/05	1122030275	**820495**	87	Y
ML430 i	*163.172*	E	4266	113.942	A		☞10	03/98 ▸	1122030275	**820495**	87	Y
ML500 i	*163.175*	E	4966	113.965	A		☞10	09/00 ▸ 08/04	1122030275	**820495**	87	Y
ML55 i	*163.174*	E	5439	113.981	A		☞10	09/99 ▸ 08/04	1122030275	**820495**	87	Y
ML270CDi CDi	*163.113*	D	2668	612.963	M			07/99 ▸ 03/05	6122000015	●**820835**	87	Y
ML270CDi CDi	*163.113*	D	2668	612.963	A			07/99 ▸ 03/05	6122000015	●**820835**	87	Y

M Class (164)

5.0 i V8 24V	*164.175*	E	4966	113.964	A		☞10	05/05 ▸ 04/08	1122030275	**820495**	87	Y

• **New** Nouveau **Nuevo** Novo **Nuovo** Nieuw **Neu** Yeni Новый Nou

Type Ctr.			CC			AC		2 3	OE	Valeo	(°)C		
MERCEDES (.../...)													
R Class (129)													
500 5.0 i		E	4973	119972, 119982	A			08/93 ▸ 07/01	1192000015	**820979**	80	Y
R Class (W251)													
5.0 i V8 24V	*251/.075/.175*	E	4966	113.971	A		☞10	10/05 ▸ 04/08	1122030275	**820495**	87	Y
S Class (116)													
280	*116/.020/.024/.025*	E	2746	110.985/993, 110.922/932, 110.985	M		☞8	08/72 ▸ 07/80	1102000515	**819873**	87	Y
350 i	*116/.028/.029*	E	3499	116.985	M		☞9	09/72 ▸ 03/80	1162000015	**819870**	75	Y
450	*116/.032/.033*	E	4520	117.983	A		☞9	11/72 ▸ 09/80	1162000015	**819870**	75	Y
S Class (126)													
260 SE i	*126.020*	E	2599	103.941	M		☞8	09/85 ▸ 06/91	1102000515	**819873**	87	Y
260 SE i	*126.020*	E	2599	103.941	A		☞8	09/85 ▸ 06/91	1102000515	**819873**	87	Y
280 S,280 SE i,280 SEL i	*126/.021/.022/.023*	E	2746	110.987, 110.924	M		☞8	09/79 ▸ 09/85	1102000515	**819873**	87	Y
280 SE i	*126.022*	E	2746	110.987	A		☞8	09/79 ▸ 09/85	1102000515	**819873**	87	Y
300 SE i,300 SEL i	*126/.024/.025*	E	2962	103.981	M		☞8	09/85 ▸ 07/91	1102000515	**819873**	87	Y
300 SE i,300 SEL i	*126/.024/.025*	E	2962	103.981	A		☞8	09/85 ▸ 07/91	1102000515	**819873**	87	Y
380 SE i,380 SEL i	*126/.032/.033*	E	3818	116.961	A		☞9	01/80 ▸ 09/85	1162000015	**819870**	75	Y
420 SE i,420 SEC i 420 SEL i	*126/.034/.035/.046*	E	4196	116.965	A		☞2	09/85 ▸ 12/91	1162000315	**820494**	80	Y
500 SE i,500 SEC i 500 SEL i	*126/.036/.037/.044*	E	4973	117.961, 117.963	A		☞2	09/81 ▸ 06/91	1162000315	**820494**	80	Y
500 SE i,500 SEL i	*126/.036/.037*	E	4973	117.961	A		☞9	09/85 ▸ 06/91	1162000015	**819870**	75	Y
560 SE i,560 SEC i 560 SEL i	*126/.038/.039/.045*	E	5547	117.968	A		☞2	09/85 ▸ 12/91	1162000315	**820494**	80	Y
S Class (140)													
300	*140.028*	E	2799	104.944	M		☞8	10/92 ▸ 06/93	1102000515	**819873**	87	Y
2.8 i	*140.028*	E	2799	104.944	M		☞8	07/93 ▸ 08/98	1102000515	**819873**	87	Y
300	*140.028*	E	2799	104.944	A		☞8	10/92 ▸ 06/93	1102000515	**819873**	87	Y
2.8 i	*140.028*	E	2799	104.944	A		☞8	07/93 ▸ 08/98	1102000515	**819873**	87	Y
300	*140/.032/.033*	E	3199	104.990	M		☞8	03/91 ▸ 06/93	1102000515	**819873**	87	Y
300	*140/.032/.033*	E	3199	104.990	A		☞8	03/91 ▸ 06/93	1102000515	**819873**	87	Y
3.2 i	*140/.032/.033*	E	3199	104.994	A		☞8	07/93 ▸ 08/98	1102000515	**819873**	87	Y
400	*140/.042/.043*	E	4196	119.971	A		☞2	03/91 ▸	1162000315	**820494**	80	Y
4.2 i	*140/.042/.043/.063*	E	4196	119.971	A		☞2	07/93 ▸	1162000315	**820494**	80	Y
500 i	*140/.050/.051/.070*	E	4973	119.970	A		☞2	03/91 ▸	1162000315	**820494**	80	Y
5.0 i V8 32V	*140/.050/.051*	E	4973	119.970	A		☞2	07/93 ▸	1162000315	**820494**	80	Y
3.0 TD	*140.135*	D	2996	606.961	A		☞2,5	08/96 ▸ 08/98	6022000015	**819969**	80	Y
300 TD	*140.134*	D	3449	603.971	A		☞2,5	03/92 ▸ 06/93	6022000015	**819969**	80	Y
3.5 TD	*140.134*	D	3449	603.971	A		☞2,5	07/93 ▸ 08/98	6022000015	**819969**	80	Y
S Class (220)													
S280 i,S280L i	*220/.063/.163*	E	2799	112.922	A	+	☞10	03/99 ▸ 09/04	1122030275	**820495**	87	Y
S320 i,S320L i	*220/.065/.165*	E	3199	112.944	A	+	☞10	09/98 ▸ 09/04	1122030275	**820495**	87	Y
S350 i,S350L i	*220/.067/.087/.167/.187*	E	3724	112.972, 112.975	A	+	☞10	09/02 ▸ 09/04	1122030275	**820495**	87	Y
S430 i,S430L i	*220/.070/.083/.170/.183*	E	4266	113.948, 113.941	A	+	☞10	09/98 ▸ 09/04	1122030275	**820495**	87	Y
S500 i,S500L i	*220/.075/.084/.175/.184 .875*	E	4966	113.966, 113.960	A	+	☞10	09/98 ▸ 09/04	1122030275	**820495**	87	Y
S55 i	*220/.073/.173*	E	5439	113.986	A	+	☞10	01/00 ▸ 09/04	1122030275	**820495**	87	Y
S320CDI CDI,S320CDIL CDI	*220/.025/.125*	D	3222	648.960	A	+		09/02 ▸ 09/04	6462000015	**820571**	92	Y
S320CDI CDI,S320CDIL CDI	*220/.026/.126*	D	3224	613.960	A			01/00 ▸ 09/02	6112000515	●**820800**	92	Y
SL (C107 Coupé) (71>81)													
2.7	*107.022*	E	2746	110.982/986	M		☞8	07/74 ▸ 08/81	1102000515	**819873**	87	Y
3.5,3.5 i	*107.023*	E	3499	116.984, 116.982	M		☞9	10/71 ▸ 02/80	1162000015	**819870**	75	Y
3.8	*107.025*	E	3818	116.960	A		☞9	03/81 ▸ 08/81	1162000015	**819870**	75	Y
5.0	*107.026*	E	4973	117.960	A		☞9	05/78 ▸ 07/81	1162000015	**819870**	75	Y
5.0	*107.026*	E	4973	117.960	A		☞9	04/78 ▸ 02/80	1162000015	**819870**	75	Y
SL (R107 ROADSTER) (71>89)													
2.7	*107.042*	E	2746	110.992, 110.982/986	M		☞8	07/74 ▸ 07/85	1102000515	**819873**	87	Y
3.0 i	*107.041*	E	2962	103.982	M		☞8	09/85 ▸ 08/89	1102000515	**819873**	87	Y
3.0 i	*107.041*	E	2962	103.982	A		☞8	09/85 ▸ 08/89	1102000515	**819873**	87	Y

• **New** Nouveau **Nuevo** Novo **Nuovo** Nieuw **Neu** Yeni Новый Nou

Type Ctr.		cc		AC		2 3	OE	Valeo	(°)C	
MERCEDES (.../...)										
SL (R107 ROADSTER) (71>89) (.../...)										
3.5,3.5 i *107.043*	E	3499	116.984, 116.982	M		☞9	04/71 ▸ 02/80	1162000015	**819870**	75	Y
3.8 *107.045*	E	3818	116.960	A		☞9	03/80 ▸ 08/85	1162000015	**819870**	75	Y
4.2 i *107.047*	E	4196	116.964	A		☞2	09/85 ▸ 08/89	1162000315	**820494**	80	Y
5.0 *107.046*	E	4973	117.960	A		☞9	04/80 ▸ 08/81	1162000015	**819870**	75	Y
5.0 i *107.046*	E	4973	117.964	A		☞2	09/85 ▸ 08/89	1162000315	**820494**	80	Y
SL (129)										
SL280 i *129.058*	E	2799	104.943	M		☞8	08/93 ▸	1102000515	**819873**	87	Y
SL280 i *129.058*	E	2799	104.943	A		☞8	08/93 ▸	1102000515	**819873**	87	Y
300 i *129.061*	E	2960	104.981	M		☞8	03/89 ▸ 07/93	1102000515	**819873**	87	Y
300 i *129.061*	E	2960	104.981	A		☞8	03/89 ▸ 07/93	1102000515	**819873**	87	Y
300 i *129.060*	E	2962	103.984	M		☞8	03/89 ▸ 07/93	1102000515	**819873**	87	Y
300 i *129.060*	E	2962	103.984	A		☞8	03/89 ▸ 07/93	1102000515	**819873**	87	Y
SL320 i *129.063*	E	3199	104.991	A		☞8	08/93 ▸	1102000515	**819873**	87	Y
500 i *129/066/067*	E	4973	119.972, 119.960	A		☞2	03/89 ▸	1162000315	**820494**	80	Y
SL (230) (2001>2008)										
SL350 i *230.467*	E	3724	112.973	M		☞10	03/03 ▸ 10/05	1122030275	**820495**	87	Y
SL350 i *230.467*	E	3724	112.973	A		☞10	03/03 ▸ 10/05	1122030275	**820495**	87	Y
SL500 i *230.475*	E	4966	113.963	A		☞10	08/01 ▸ 10/05	1122030275	**820495**	87	Y
SL55 AMG i *230.474*	E	5439	113.992	A		☞10	08/01 ▸ 10/05	1122030275	**820495**	87	Y
SLK (96>2003)										
SLK200 i,SLK200K i *170/.435/.444/.445*	E	1998	111.958, 111.943, 111.946	M		☞1	08/96 ▸	1112000915	**820184**	87	Y
SLK200 i,SLK200K i *170/.435/.444*	E	1998	111.946, 111.958	A		☞1	08/96 ▸	1112000915	**820184**	87	Y
SLK230K i *170/.447/.449*	E	2295	111.973, 111.983	M		☞1	08/96 ▸	1112000915	**820184**	87	Y
SLK230K i *170/.447/.449*	E	2295	111.973, 111.983	A		☞1	08/96 ▸	1112000915	**820184**	87	Y
SLK (2004>2007)										
SLK i *171442*	E	1796	271.944	M			03/04 ▸	2712000015	**820941**	90	Y
SLK i *171442*	E	1796	271.944	A			01/04 ▸	2712000015	**820941**	90	Y
SLK (171) (2008>)										
1.8 i 16V *171.445*	E	1796	271.954	M			01/08 ▸	2712000015	**820941**	90	Y
1.8 i 16V *171.445*	E	1796	271.954	A			01/08 ▸	2712000015	**820941**	90	Y
V Class (638/2)										
V200 *638/214/294*	E	1998	111.950, 111.948	M			10/96 ▸	1112000815	**820184**	87	N
V200 *638/214/294*	E	1998	111.948, 111.950	A			10/96 ▸ 12/02	1112000815	**820184**	87	N
V230 *638/234/294*	E	2295	111.978, 111.980	M			10/96 ▸	1112000815	**820184**	87	N
V230 *638/234/294*	E	2295	111.978, 111.980	A			10/96 ▸ 12/02	1112000815	**820184**	87	N
V200 CDI,V220 CDI *638.294*	D	2151	611.980	M		☞1	01/99 ▸ 12/02	6112000715	**820589**	87	N
V200 CDI,V220 CDI *638.294*	D	2151	611.980	A		☞1	01/99 ▸ 12/02	6112000715	**820589**	87	N
Vaneo (414)										
1.6 i *414.700*	E	1598	166.961, 166.960	M			10/01 ▸	1662030275	**820491**	87	Y
1.6 i *414.700*	E	1598	166.961	A			10/01 ▸	1662030275	**820491**	87	Y
1.9 i *414.700*	E	1898	166.991	M			10/01 ▸	1662030275	**820491**	87	Y
1.9 i *414.700*	E	1898	166.991	A			10/01 ▸	1662030275	**820491**	87	Y
1.7 CDI *414.700*	D	1689	668.914	M			10/01 ▸	1662030275	**820491**	87	Y
1.7 CDI *414.700*	D	1689	668.914	M			10/01 ▸	6682030275	**820492**	87	Y
1.7 CDI *414.700*	D	1689	668.914	A			10/01 ▸	6682030275	**820492**	87	Y
1.7 CDI *414.700*	D	1689	668.914	A			10/01 ▸	1662030275	**820491**	87	Y
MERCEDES										
MB100										
2.4 D *631/333/334*	D	2399	616.963	M		☞2,5	09/89 ▸ 01/96	6012000115	**819969**	80	Y
Sprinter (95>)										
2.3 i *901/.061/.062, 902/.011/.012/.061 .062/.071/.072, 903/.011/.012/.013 .022/.061/.062/.063/.071/.072/.073 904/.012/.013/.062/.063*	E	2295	111.979	M		☞1	02/95 ▸	1112000915	**820184**	87	Y

• **New** Nouveau **Nuevo** Novo **Nuovo** Nieuw **Neu** Yeni Новый Nou

Type Ctr.		CC			AC				OE	Valeo	(°)C	
MERCEDES (.../...)												
Sprinter (95>) (.../...)												
2.3 D	901/.311/.312/.321/.361/.362/.371 902/.311/.312/.321/.322/.361/.362 .371/.372, 903/.311/.312/.313/.321 .322/.323/.361/.362/.363/.371/.372 .373, 904/.312/.313/.322/.323/.362 .363	D	2299	601.943	M		☞2,5	02/95 ▸	6012000015	**819970**	85	Y
2.9 D	901/.421/.461/.462, 902/.411/.412 .421/.422/.461/.462/.471/.472, 903 .411/.412/.413/.421/.422/.423/.461 .462/.463/.471/.472/.473, 904/.412 .413/.422/.423/.462/.463	D	2874	602.980	M		☞2,5	02/95 ▸	6012000015	**819970**	85	Y
Sprinter II (2006>)												
2.2 D	906/.111/.113/.131/.133/.135/.153 .155/.211/.213/.231/.233/.235/.253 .255/.611/.613/.631/.633/.635/.637 .653/.655/.657/.711/.713/.731/.733 .735	D	2148	646.DE22LA, 646.984, 646	M		☞1	02/06 ▸	6112000715	**820589**	87	N
2.2 D	906/.111/.113/.131/.133/.135/.153 .155/.211/.213/.231/.233/.235/.253 .255/.611/.613/.631/.633/.635/.637 .653/.655/.657/.711/.713/.731/.733 .735	D	2148	646.DE22LA, 646.984, 646	A		☞1	02/06 ▸	6112000715	**820589**	87	N
Transporter 207-410												
2.3	601/.011/.012/.016/.018/.021/.022 .061/.062/.066/.067/.071/.076/.077 602/.011/.013/.016/.021/.023/.026 .028/.061/.062/.066/.067/.071/.072 .076/.077/.082/.116/.117/.166/.167 .176/.177, 611/.017/.018/.067/.068	E	2299	102.945	M		☞8	03/82 ▸ 01/90	1102000515	**819873**	87	Y
2.3	601/.011/.012/.016/.018/.021/.022 .026/.028/.061/.062/.066/.067/.071 .072/.076/.077, 602/.011/.013/.016 .018/.021/.023/.026/.028/.061/.062 .066/.067/.071/.072/.076/.077/.082	E	2307	115.955,115.972	M			04/77 ▸ 02/82	1152000615	●**820768**	83	Y
2.3 D	601/.311/.312/.316/.318/.321/.322 .326/.328/.361/.362/.368/.371/.376 .377, 602/.311/.313/.316/.318/.321 .323/.326/.328/.361/.362/.366/.367 .371/.372/.376/.377, 611/.317/.318 .367/.368	D	2299	601.940	M		☞2,5	09/88 ▸	6012000015	**819970**	85	Y
2.9 D	601/.411/.412/.416/.418/.421/.422 .426/.428/.461/.462/.466/.467/.476 .477, 602/.411/.412/.416/.418/.421 .422/.426/.428/.461/.462/.466/.467 .471/.472/.476/.477/.478/.487, 611 .417/.418/.467/.468	D	2874	602.940	M		☞2,5	09/88 ▸	6012000015	**819970**	85	Y
Viano												
3.0 i,3.2 i	639/7111/7131/8111/8131 8151	E	3199	112.951	A		☞10	01/03 ▸	1122030275	**820495**	87	Y
3.7 i	639.811	E	3724	112.976	A		☞10	06/04 ▸	1122030275	**820495**	87	Y
2.0 Cdi,2.2 Cdi	639/7111/7131/8111/8131 8151	D	2148	646.982	M		☞1	01/03 ▸	6112000715	**820589**	87	N
2.0 Cdi,2.2 Cdi	639/7111/7131/8111/8131 8151	D	2148	646.982	A		☞1	01/03 ▸	6112000715	**820589**	87	N
Vito (96>2003)												
2.0 i	638/.014/.094/.114/.194	E	1998	111.950, 111.948	M			01/96 ▸	1112000815	**820184**	87	N
2.0 i	638/.014/.094/.114/.194	E	1998	111.950, 111.948	A			01/96 ▸	1112000815	**820184**	87	N
2.3 i	638/.034/.094/.134/.194	E	2295	111.980, 111.978	M			12/96 ▸	1112000815	**820184**	87	N
2.3 i	638/.034/.094/.134/.194	E	2295	111.978, 111.980	A			12/96 ▸	1112000815	**820184**	87	N

• **New** Nouveau **Nuevo** Novo **Nuovo** Nieuw **Neu** Yeni Новый Nou

Type Ctr.		cc		AC			OE	Valeo	(°)C	
MERCEDES (.../...)										
Vito (96>2003) (.../...)										
2.3 D,2.3 TD *638/.064/.068/.074/.078 .164/.174*	D	2299	601.970, 601.942	M		☞2,5	01/96 ▸	6022000015	**819969**	80	Y
Vito (2003>)										
3.2 i *639/6011/6031/6051/7011/7031/7051*	E	3199	112.951	A		☞10	01/03 ▸	1122030275	**820495**	87	Y
3.7 i V6 24V *639/.701/.703/.705*	E	3724	112.976	M		☞10	06/04 ▸ 02/09	1122030275	**820495**	87	Y
3.7 i V6 24V *639/.701/.703/.705*	E	3724	112.976	A		☞10	06/04 ▸ 02/09	1122030275	**820495**	87	Y
2.2 CDI *639/6011/6031/6051/7011 7031/7051*	D	2148	646.982, 646.983	M		☞1	01/03 ▸	6112000715	**820589**	87	N
MG										
MG F										
1.6 i 16V *RDWB*	E	1589	16K4F4	M			02/00 ▸ 03/02	PEL10016	**820056**	88	Y
1.8 i VVC 16V *RDWB*	E	1795	18K4K	M			10/01 ▸ 03/02	PEL10016	**820056**	88	Y
1.8 i 16V,1.8 i VVC 16V *RDWB*	E	1796	18K4F,18K4K	M			03/95 ▸ 03/02	PEL10016	**820056**	88	Y
MG TF										
1.6 i 16V	E	1589	16K4F4	M			03/02 ▸ 04/05	PEL10016	**820056**	88	Y
1.8 i VVC 16V	E	1795	18K4K	M			03/02 ▸ 04/05	PEL10016	**820056**	88	Y
1.8 i 16V	E	1796	18K4F	A			03/02 ▸ 04/05	PEL10016	**820056**	88	Y
1.8 i 16V	E	1796	18K4F	M			03/02 ▸ 04/05	PEL10016	**820056**	88	Y
MG ZR										
1.4 i 16V	E	1396	14K4F4	M			06/01 ▸ 04/05	PEL10016	**820056**	88	Y
1.8 i VVC 16V	E	1795	18K4K	M			06/01 ▸ 04/05	PEL10016	**820056**	88	Y
1.8 i 16V	E	1796	18K4F	A			06/01 ▸ 04/05	PEL10016	**820056**	88	Y
1.8 i 16V	E	1796	18K4F	M			06/01 ▸ 04/05	PEL10016	**820056**	88	Y
MG ZS										
1.6 i 16V	E	1588	16K4F4	M			07/01 ▸ 04/05	PEL10016	**820056**	88	Y
1.8 i 16V	E	1796	18K4F	A			07/01 ▸ 04/05	PEL10016	**820056**	88	Y
1.8 i 16V	E	1796	18K4F	M			07/01 ▸ 04/05	PEL10016	**820056**	88	Y
MG ZT										
1.8 i 16V	E	1796	18K4F	M			06/01 ▸ 04/05	PEL10016	**820056**	88	Y
MINI										
MINI (2001>)										
1.6 i 16V *RC41, RH41, RF32, RE41 RA41, RA31, RA30, RC31*	E	1598	W10B16A-115,W10B16A-90 W11B16A-170	A			09/01 ▸	11531485847	●**820568**	91	Y
1.6 i 16V *RE91, RA31, RH31, RC31 RD31, RA30, RF31, RE31*	E	1598	W10B16A-115,W10B16A-90 W11B16A-163,W11B16A-170 W11B16A-210	M			09/01 ▸	11531485847	●**820568**	91	Y
1.4 d *RB10, RB11*	D	1364	1ND	M		☞4,9	05/03 ▸	11537791072	**820516**	82	Y
MITSUBISHI										
Carisma (95>99)										
1.6 i *DA1/ALND/ALNJ/ALNM/ASND/ASNJ/ASNM*	E	1597	4G92-21, 4G92-21S, 4G92-21L	M		☞4,9	05/95 ▸ 07/98	MD310106	**820136**	82	Y
1.6 i *DA1/ALND/ALNJ/ALNM/ASND/ASNJ/ASNM*	E	1597	4G92-21S, 4G92-21, 4G92-21L	M			05/95 ▸ 02/99	MD332446	**820519**	88	Y
1.6 i *DA1/ALRD/ALRJ/ASRD/ASRJ*	E	1597	4G92-21S, 4G92-21L, 4G92-23	A			05/95 ▸ 02/99	MD332446	**820519**	88	Y
1.6 i *DA1/ALRD/ALRJ/ASRD/ASRJ*	E	1597	4G92-23, 4G92-21S, 4G92-21L	A		☞4,9	05/95 ▸ 07/98	MD310106	**820136**	82	Y
1.6 i *DA1ASRJ, DA1ALRD, DA1ASRD, DA1ALRJ*	E	1597	4G92-21L,4G92-21S,4G92-23	A			08/98 ▸ 02/99	MD315301	**820512**	82	Y
1.6 i *DA1ALND, DA1ASNJ, DA1ALNJ, DA1ASND*	E	1597	4G92-21,4G92-21L,4G92-21S	M			08/98 ▸ 02/99	MD315301	**820512**	82	Y
1.8 i 16V *DA2/ALNG/ALNJ/ALNP/ASNG ASNJ/ASNP*	E	1834	4G93-21, 4G93-41	M			05/95 ▸ 02/99	MD332446	**820519**	88	Y
1.8 i 16V *DA2/ALNG/ALNJ/ALNP/ASNG ASNJ/ASNP*	E	1834	4G93-41, 4G93-21	M		☞4,9	05/95 ▸ 07/98	MD310106	**820136**	82	Y

• **New** Nouveau **Nuevo** Novo **Nuovo** Nieuw **Neu** Yeni Новый Nou

		E	CC			AC		2 3	OE	Valeo	(°)C	
MITSUBISHI (.../...)												
Carisma (95>99) (.../...)												
1.8 GDI 16V	*DA2/ALND/ALNJ/ALNP/ASND ASNJ/ASNP*	E	1834	4G93-G10	M			05/97 ▸ 02/99	MD338234	**820552**	85	Y
1.8 i 16V	*DA2/ALRJ/ALRP/ASRJ/ASRP*	E	1834	4G93-23	A			05/95 ▸ 02/99	MD332446	**820519**	88	Y
1.8 i 16V	*DA2/ALRJ/ALRP/ASRJ/ASRP*	E	1834	4G93-23	A		☞4,9	05/95 ▸ 07/98	MD310106	**820136**	82	Y
1.8 GDI 16V	*DA2/ALRD/ALRJ/ALRP/ASRD ASRJ/ASRP*	E	1834	4G93-G30	A			05/97 ▸ 02/99	MD338234	**820552**	85	Y
1.8 i 16V	*DA2ALRJ, DA2ASRJ, DA2ALRP DA2ASRP*	E	1834	4G93-23	A			08/98 ▸ 02/99	MD315301	**820512**	82	Y
1.8 i 16V	*DA2ASNJ, DA2ALNJ, DA2ALNP DA2ASNP*	E	1834	4G93-21	M			08/98 ▸ 02/99	MD315301	**820512**	82	Y
Carisma (99>)												
1.6 i,1.6 i 16V	*DA1/ALNG/ALNS/ALNU/ASNG ASNS/ASNU*	E	1597	4G92-28Q, 4G92-28R, 4G92-103	M			03/99 ▸	MD328070	**820519**	88	Y
1.6 i	*DA1/ALRG/ALRU/ASRG/ASRU*	E	1597	4G92-2ML	A			03/99 ▸	MD328070	**820519**	88	Y
1.6 i	*DA1ASRG, DA1ASRU*	E	1597	4G92-2ML	A			03/99 ▸ 06/00	MD315301	**820512**	82	Y
1.8 i 16V	*DA2/ALNG/ALNS/ALNU/ALNX ASNG/ASNS/ASNU/ASNX*	E	1834	4G93-G82	M			03/99 ▸	MD338234	**820552**	85	Y
1.8 i 16V	*DA2/ALRG/ALRU/ALRX/ASRG ASRU*	E	1834	4G93-G36	A			03/99 ▸	MD338234	**820552**	85	Y
1.8 GDI 16V	*DA2ALRG*	E	1834	4G93-GDI	A			07/00 ▸ 12/03	MD315301	**820512**	82	Y
1.8 GDI 16V,1.8 i 16V	*DA2ASNU, DA2ASNX, DA2ALNS DA2ALNG, DA2ASNS DA2ALNX, DA2ALNU DA2ASNG*	E	1834	4G93-G83,4G93-H	M			03/99 ▸ 12/03	MD315301	**820512**	82	Y
Challenger												
2.5 TD	*K94/WGNH/WNUF/WNUP*	D	2477	4D56T-4P	M		☞4,9	10/98 ▸	MD335170	**820136**	82	Y
Colt II (84>87)												
1200	*C15/ALFD/ALND/AMFD/AMFM/AMND*	E	1198	4G16	M		☞7,8	01/84 ▸ 06/88	MD972903	**820963**	88	N
1300	*C11/ALND/AMNM*	E	1299	G13B	M		☞7,8	06/86 ▸ 06/88	MD972903	**820963**	88	N
1500	*C12/ALNJ/AMND/AMNJ*	E	1468	4G15, G15B	M		☞7,8	01/84 ▸ 02/89	MD972903	**820963**	88	N
1500	*C12/ALKJ/AMKJ*	E	1468	G15B, 4G15	A		☞7,8	01/84 ▸ 02/89	MD972903	**820963**	88	N
1600 Turbo	*C13AMNJ*	E	1597	4G32T	M		☞7,8	01/84 ▸ 06/88	MD972903	**820963**	88	N
1800 D	*C14/ALND/ALNM/AMND/AMNM*	D	1795	4D65	M		☞4,7,8	01/84 ▸ 06/88	MD972909	**820496**	82	Y
Colt III (87>91)												
1300	*C51/AMFM/AMND/AMNM/VMFM/VMNM*	E	1299	4G13, 4G13-ESI	M		☞7,8	04/88 ▸ 05/92	MD972903	**820963**	88	N
1300	*C51/AMND/AMNM/VMNM*	E	1299	4G13	M		☞7,8	08/90 ▸ 05/92	MD972908	**819942**	82	Y
1500	*C52/AMND/AMNJ*	E	1468	4G15-MPIC, 4G15, 4G15-MPI	M		☞7,8	04/88 ▸ 05/92	MD972903	**820963**	88	N
1500	*C52/AMND/AMNJ*	E	1468	4G15, 4G15-MPIC, 4G15-MPI	M		☞7,8	05/89 ▸ 05/92	MD972908	**819942**	82	Y
1500	*C52/AMKJ/AMRD/AMRJ*	E	1468	4G15-MPIC, 4G15	A		☞7,8	04/88 ▸ 05/92	MD972903	**820963**	88	N
1500	*C52/AMKJ/AMRD/AMRJ*	E	1468	4G15-MPIC, 4G15	A		☞7,8	05/89 ▸ 05/92	MD972908	**819942**	82	Y
1600 16V	*C53AMNG*	E	1596	4G61-MPI, 4G61-MPIC	M		☞7,8	04/88 ▸ 05/90	MD997607	**819942**	82	Y
1600 16V	*C53AMNG*	E	1596	4G61-MPI, 4G61-MPIC	M		☞7,8	04/88 ▸ 05/90	MD997608	**820963**	88	N
1800 16V	*C58AMNG*	E	1836	4G67, 4G67-C	M		☞7,8	11/89 ▸ 05/92	MD997608	**820963**	88	N
1800 16V	*C58AMNG*	E	1836	4G67-C, 4G67	M		☞7,8	11/89 ▸ 05/92	MD997607	**819942**	82	Y
1800 D	*C54/AMND/AMNM*	D	1795	4D65, 4D65-C	M		☞7,8	04/88 ▸ 05/92	MD972908	**819942**	82	Y
Colt IV (91>96)												
1.3	*CA1AMND*	E	1299	4G13-2J	M		☞7,8	12/91 ▸ 12/96	MD972905	**819942**	82	Y
1.3	*CA1/AMND/AMNJ/AMNM*	E	1299	4G13-2J	M		☞7,8	12/91 ▸ 12/96	MD972903	**820963**	88	N
1.6	*CC4AMNJ, CA4/AMND/AMNJ*	E	1597	4G92	M		☞4,9	12/91 ▸ 06/92	MD317015	**820194**	76	N
1.6	*CA4/AMRD/AMRJ*	E	1597	4G92	A		☞4,9	12/91 ▸ 06/92	MD317015	**820194**	76	N
1.6	*CA4AMRJ, CA4AMRD*	E	1597	4G92	A			07/92 ▸ 12/96	MD315301	**820512**	82	Y
1.6	*CA4AMNJ, CA4AMND, CC4AMNJ*	E	1597	4G92	M			07/92 ▸ 12/96	MD315301	**820512**	82	Y
1.8 16V	*CA5AMNG*	E	1834	4G93-1	M			07/92 ▸ 12/96	MD337408	**820512**	82	Y
1.8 16V	*CA5AMNG*	E	1834	4G93-1	M		☞4,9	12/91 ▸ 06/92	MD170031	**820135**	76	Y
Colt V (96>2003)												
1.3 i	*CJ1/AMND/AMNJ*	E	1299	4G13-38	M		☞4,9	06/00 ▸ 06/03	MD346547	**820533**	88	Y
1.3 i 12V	*CJ1AMND*	E	1299	4G13-38	M		☞4,9	11/95 ▸	MD170031	**820135**	76	Y
1.5	*CJ2AMNJ*	E	1468	4G15	M		☞4,9	11/95 ▸	MD170031	**820135**	76	Y

• **New** Nouveau **Nuevo** Novo **Nuovo** Nieuw **Neu** Yeni Новый Nou

			Type Ctr.		CC			AC			OE	Valeo	(°)C
MITSUBISHI (.../...)													
Colt V (96>2003) (.../...)													
1.3 i 12V	*CJ1AMRJ*	E		1299	4G13-38	A			11/95 ▸ 05/00	MD337408	**820512**	82	Y
1.3 i	*CJ1AMND, CJ1AMNJ*	E		1299	4G13-38,4G13-380	M			11/95 ▸	MD337408	**820512**	82	Y
1.6 i	*CJ4AMRU, CJ4AMRJ*	E		1597	4G92-103,4G92-31,4G92-38	A			11/95 ▸ 06/03	MD315301	**820512**	82	Y
1.6 i	*CJ4AMNU, CJ4AMNJ, CJ4AMND*	E		1597	4G92-103,4G92-31,4G92-38	M			11/95 ▸ 06/03	MD315301	**820512**	82	Y
Colt (Z30)													
1.5 i Turbo	*Z37AMNM, Z37ABNH*	E		1468	4G15MIVEC	M			06/05 ▸ 09/08	MD337408	**820512**	82	Y
Eclipse													
1.8 i	*D21/AMNH/AMNJ*	E		1755	4G37-7J	M		☞7,8	12/89 ▸ 03/94	MD972903	**820963**	88	N
2.0 i 16V,2.0 i Turbo 16V	*D27AMNG, D22/AMNH/AMNP*	E		1997	4G63-5L, 4G63-5B, 4G63-5D 4G63-78	M		☞7,8	12/89 ▸	MD997607	**819942**	82	Y
2.0 i 16V	*D22AMRH*	E		1997	4G63-5D	A		☞7,8	12/89 ▸ 03/94	MD997607	**819942**	82	Y
2.0 i Turbo 16V	*D32AMNH*	E		1997	4G63-7L	M			08/95 ▸ 04/99	MD315301	**820512**	82	Y
Galant II (84>87)													
1.6	*E11/ASND/ASNJ/ASNU*	E		1597	4G32	M		☞7,8	05/84 ▸ 11/87	MD972903	**820963**	88	N
2.0,2.0 Turbo	*E15/ASNG/ASNH/ASNJ*	E		1997	4G63T, G63B, 4G63-C	M		☞7,8	05/84 ▸ 11/87	MD972903	**820963**	88	N
2.0	*E15ASRH*	E		1997	4G63-C	A		☞7,8	05/84 ▸ 11/87	MD972903	**820963**	88	N
2.4	*E16ASNH*	E		2351	G64B	M		☞7,8	06/86 ▸ 11/87	MD972903	**820963**	88	N
2.4	*E16ASRH*	E		2351	G64B	A		☞7,8	07/85 ▸ 11/87	MD972903	**820963**	88	N
1.8 TD	*E14/ASNJ/ASNU*	D		1795	4D65T	M		☞4,7,8	05/84 ▸ 11/87	MD972909	**820496**	82	Y
1.8 TD	*E14ASRU*	D		1795	4D65T	A		☞4,7,8	07/85 ▸ 11/87	MD972909	**820496**	82	Y
Galant III (87>92)													
1.6	*E31ASNJ*	E		1597	4G32	M		☞7,8	11/87 ▸ 10/92	MD972905	**819942**	82	Y
1.6	*E31/ASND/ASNJ*	E		1597	4G32	M		☞7,8	11/87 ▸ 10/92	MD997604	**820963**	88	N
1.6	*E31ASRH*	E		1597	4G32	A		☞7,8	11/87 ▸ 10/92	MD972905	**819942**	82	Y
1.6	*E31ASRH*	E		1597	4G32	A		☞7,8	11/87 ▸ 10/92	MD997604	**820963**	88	N
1.8	*E32/ALNH/ALNJ/ASNH/ASNJ/ASNU*	E		1755	4G37, 4G37-7F, 4G37-7J	M		☞7,8	11/87 ▸ 10/92	MD997604	**820963**	88	N
1.8	*E32/ALRH/ASRH*	E		1755	4G37-7F, 4G37-7J, 4G37	A		☞7,8	11/87 ▸ 10/92	MD997604	**820963**	88	N
1.8	*E32ASRH*	E		1755	4G37	A		☞7,8	11/87 ▸ 10/92	MD972905	**819942**	82	Y
2.0,2.0 16V	*E33/ALNG/ALNH/ALNJ/ALNU ASNG/ASNH/ASNJ, E38/ALNH ASNH, E39/ALNG/ALNH/ASNG ASNH*	E		1997	4G63-3P, 4G63, 4G63-3L 4G63-5B, 4G63-5F, 4G63-5	M		☞7,8	11/87 ▸ 10/92	MD997608	**820963**	88	N
2.0 16V	*E33/ALNG/ASNG, E39/ALNG ASNG*	E		1997	4G63-5B, 4G63-5, 4G63-5F	M		☞7,8	11/87 ▸ 10/92	MD997607	**819942**	82	Y
2.0	*E33/ALRH/ALRU/ASRH/ASRU*	E		1997	4G63-3L, 4G63	A		☞7,8	11/87 ▸ 10/92	MD997604	**820963**	88	N
2.0	*E33ASRH*	E		1997	4G63	A		☞7,8	06/90 ▸ 10/92	MD972905	**819942**	82	Y
1.8 TD	*E34/ALNH/ALNJ/ASNH/ASNJ*	D		1795	4D65-1D, 4D65-1T	M		☞4,7,8	11/87 ▸ 05/90	MD972909	**820496**	82	Y
1.8 TD	*E34/ALNH/ALNJ/ASNH/ASNJ*	D		1795	4D65-1D, 4D65-1T	M		☞7,8	06/90 ▸ 10/92	MD972908	**819942**	82	Y
1.8 TD	*E34/ALRH/ASRH*	D		1795	4D65-1D	A		☞4,7,8	11/87 ▸ 05/90	MD972909	**820496**	82	Y
1.8 TD	*E34/ALRH/ASRH*	D		1795	4D65-1D, 4D65-1T	A		☞7,8	11/89 ▸ 10/92	MD972908	**819942**	82	Y
Galant IV (92>96)													
1.8	*E52/ASNH/ASNJ*	E		1834	4G93-OM3	M		☞4,9	11/92 ▸ 05/96	MD170031	**820135**	76	Y
1.8	*E52ASRH, E52ALRH*	E		1834	4G93-0,4G93-OM3	A			11/92 ▸ 05/96	MD337408	**820512**	82	Y
1.8	*E52ALNH, E52ASNH, E52ALNJ, E52ASNJ*	E		1834	4G93-0,4G93-OM3	M			11/92 ▸ 05/96	MD337408	**820512**	82	Y
2.0 16V	*E55ASNH*	E		1997	4G63-6B	M		☞4,9	12/92 ▸ 11/94	MD317015	**820194**	76	N
2.0 16V	*E55ASRH*	E		1997	4G63-6M	A		☞4,9	11/92 ▸ 09/96	MD317015	**820194**	76	N
2.0 16V	*E55ASRH, E55ALRH*	E		1997	4G63-6M	A			11/92 ▸ 05/96	MD315301	**820512**	82	Y
2.0 16V	*E75ASNH, E55ASNJ, E55ASNH E55ALNH, E75ALNH E55ALNJ*	E		1997	4G63-6B	M			11/92 ▸ 05/96	MD315301	**820512**	82	Y
2.5 V6 24V	*E88/ALNG/ASNG*	E		2497	6G73	M		☞4,9	11/92 ▸ 05/96	MD174233	**820513**	82	Y
2.0 TD	*E57/ALNH/ALNJ/ASNH/ASNJ*	D		1998	4D68T-1	M		☞4,9	11/92 ▸ 09/96	MD317015	**820194**	76	N
2.0 TD	*E57ASNH, E57ASNJ*	D		1998	4D68T-1	M			11/92 ▸ 09/96	MD315301	**820512**	82	Y
Galant V (96>2003)													
2.0 i 16V	*EA2WLRJ, EA2ASRH, EA2WLRH EA2ASRJ*	E		1997	4G63-6,4G63-6G,4G63-6GR 4G63-6M,4G63-6T	A			10/96 ▸ 05/03	MD315301	**820512**	82	Y
2.0 i 16V	*EA2ASNJ, EA2WLNJ, EA2ASNH EA2WLNH*	E		1997	4G63-6,4G63-6G,4G63-6GR 4G63-6T	M			10/96 ▸ 05/03	MD315301	**820512**	82	Y

• **New** Nouveau **Nuevo** Novo **Nuovo** Nieuw **Neu** Yeni Новый Nou

			Type Ctr.		CC			AC		2 3	OE	Valeo	(°)C	
MITSUBISHI (.../...)														
Galant V (96>2003) (.../...)														
2.4 GDI,2.4 i	*EA3/ASNH/ASNJ/WLNH/WLNJ*	E		2351	4G64-43, 4G64-418, 4G64-41R 4G64-41	M			12/98 ▸	MD338234	**820552**	85	Y
2.4 GDI,2.4 i	*EA3/ASRH/ASRJ/WLRH/WLRJ*	E		2351	4G64-41R, 4G64-43, 4G64-418 4G64-41	A			12/98 ▸	MD338234	**820552**	85	Y
2.5 i V6 24V	*EA5ASRG, EA5WLRG*	E		2497	6A13-41,6A13-48,6A13-4E	A			10/96 ▸ 05/03	MD315301	**820512**	82	Y
2.5 i V6 24V	*EA5WLNG, EA5ASNG*	E		2497	6A13-41,6A13-48,6A13-4F	M			10/96 ▸ 05/03	MD315301	**820512**	82	Y
2.0 TD	*EA6WLNH, EA6ASNH*	D		1998	4D68-4E,4D68-4E0	M			10/96 ▸ 02/00	MD315301	**820512**	82	Y
Grandis														
2.4 i	*NA4WLRU, NA4WLRH*	E		2378	4G69	A			01/04 ▸	MD315301	**820512**	82	Y
2.4 i	*NA4WLNU, NA4WLNH*	E		2378	4G69	M			01/04 ▸	MD315301	**820512**	82	Y
2.0 DI-D	*NA8/WLJH/WLJU*	D		1968	BSY	M			06/05 ▸	MN980137	**820171**	87	Y
Lancer (CB/CD4) (92>96)														
1.6 i	*CD4WLNJ, CB4/WLND/WLNJ*	E		1597	4G92-0H, 4G92-01	M		☞4,9	06/92 ▸ 06/92	MD317015	**820194**	76	N
1.6 i	*CB4WLRJ*	E		1597	4G92-0H, 4G92-01	A		☞4,9	06/92 ▸ 06/92	MD317015	**820194**	76	N
2.0 D	*CB8/WLND/WLNJ*	D		1998	4D68-0A, 4D68-0E	M		☞4,9	06/92 ▸ 04/94	MD317015	**820194**	76	N
Lancer (CK1/CP) (96>)														
1.3 i	*CK1/ASND/ASNJ*	E		1299	4G13-38	M		☞4,9	11/95 ▸	MD170031	**820135**	76	Y
1.3 i	*CK1ASRJ*	E		1299	4G13-38	A			11/95 ▸ 2000	MD337408	**820512**	82	Y
1.3 i	*CK1ASND, CK1ASNJ*	E		1299	4G13-38	M			11/95 ▸ 2000	MD337408	**820512**	82	Y
1.5 i	*CK2ASNJ*	E		1468	4G15-5	M		☞4,9	11/95 ▸	MD170031	**820135**	76	Y
1.5 i	*CK2ASRJ*	E		1468	4G15-5	A		☞4,9	11/95 ▸	MD170031	**820135**	76	Y
1.6 i	*CK4ASNJ*	E		1597	4G92-38	M			12/97 ▸ 2001	MD315301	**820512**	82	Y
Lancer F (C1) (84>88)														
1200	*C15/ASFD/ASFM/ASND*	E		1198	4G16	M		☞7,8	01/84 ▸ 06/88	MD972903	**820963**	88	N
1500	*C12ASNJ*	E		1468	4G15, G15B	M		☞7,8	01/84 ▸ 06/88	MD972903	**820963**	88	N
1500	*C12ASKJ*	E		1468	4G15, G15B	A		☞7,8	01/84 ▸ 06/88	MD972903	**820963**	88	N
1800 D	*C14/ASND/ASNM*	D		1795	4D65	M		☞4,7,8	01/84 ▸ 06/88	MD972909	**820496**	82	Y
Lancer F (C6/7) (88>95)														
1200	*C65ASND*	E		1198	4G16	M		☞7,8	04/88 ▸ 05/92	MD972903	**820963**	88	N
1300	*C61/ALND/ASFM/ASND/ASNJ/ASNM*	E		1299	4G13-ESI, 4G13, 4G13-MPI	M		☞7,8	04/88 ▸ 07/95	MD972903	**820963**	88	N
1300	*C61/ASND/ASNJ/ASNM*	E		1299	4G13	M		☞7,8	04/88 ▸	MD972908	**819942**	82	Y
1300	*C61/ASKD/ASKJ*	E		1299	4G13	A		☞7,8	10/87 ▸ 07/90	MD972903	**820963**	88	N
1300	*C61/ASKD/ASKJ*	E		1299	4G13	A		☞7,8	08/90 ▸ 05/92	MD972908	**819942**	82	Y
1500	*C62/ALND/ALNJ/ASND/ASNJ*	E		1468	4G15, 4G15-MPI	M		☞7,8	04/88 ▸ 07/95	MD972908	**819942**	82	Y
1500	*C62/ALND/ALNJ/ASND/ASNJ/ASNM*	E		1468	4G15-MPI, 4G15, 4G15-ECI	M		☞7,8	04/88 ▸ 05/92	MD972903	**820963**	88	N
1500	*C62/ALKJ/ALRJ/ASKJ/ASRJ/ASRM*	E		1468	4G15, 4G15-ECI, 4G15-MPI	A		☞7,8	04/88 ▸ 05/92	MD972903	**820963**	88	N
1500	*C62/ALKJ/ALRJ/ASKJ/ASRJ*	E		1468	4G15, 4G15-MPI	A		☞7,8	04/88 ▸ 05/93	MD972908	**819942**	82	Y
1600 16V	*C63/ALNG/ASNG*	E		1596	4G61-MPIC, 4G61-MPI	M		☞7,8	04/88 ▸ 05/90	MD997607	**819942**	82	Y
1600	*C66ALNJ, C76LNJE*	E		1597	4G92	M		☞4,9	06/92 ▸ 06/92	MD317015	**820194**	76	N
1600	*C66ALRJ*	E		1597	4G92	A		☞4,9	06/92 ▸ 06/92	MD317015	**820194**	76	N
1600	*C66ALRJ*	E		1597	4G92	A			07/92 ▸ 07/95	MD315301	**820512**	82	Y
1600	*C66ALNJ, C66ALND, C76LNJE*	E		1597	4G92	M			07/92 ▸ 07/95	MD315301	**820512**	82	Y
1800	*C77LNJE*	E		1755	4G37-7G	M		☞7,8	05/89 ▸ 05/92	MD972903	**820963**	88	N
1800 16V	*C69ALNG*	E		1834	4G93-1	M		☞4,9	06/92 ▸ 06/92	MD170031	**820135**	76	Y
1800 16V	*C68/ALNG/ASNG*	E		1836	4G67, 4G67-C	M		☞7,8	11/89 ▸ 05/92	MD997607	**819942**	82	Y
1800 16V	*C68/ALNG/ASNG*	E		1836	4G67, 4G67-C	M		☞7,8	11/89 ▸ 05/92	MD997608	**820963**	88	N
1800 D	*C64/ALND/ALNJ/ASND/ASNJ ASNM/ASNU*	D		1795	4D65, 4D65-C	M		☞7,8	04/88 ▸ 05/92	MD972908	**819942**	82	Y
2000 D	*C67/ALND/ALNJ*	D		1998	4D68-0F, 4D68	M		☞4,9	06/92 ▸ 07/95	MD317015	**820194**	76	N
1800 16V	*C69ALNG*	E		1834	4G93-1	M			07/92 ▸ 07/95	MD337408	**820512**	82	Y
Lancer F (CB/CD) (92>96)														
1.3	*CB1ASND*	E		1299	4G13-2J	M		☞7,8	12/91 ▸ 10/96	MD972905	**819942**	82	Y
1.3	*CB1/ASND/ASNJ/ASNM*	E		1299	4G13-2J	M		☞7,8	05/92 ▸ 12/96	MD972903	**820963**	88	N
1.5	*CB2ASNJ*	E		1468	4G15-5	M		☞7,8	12/91 ▸ 10/96	MD972905	**819942**	82	Y
1.5	*CB2ASKJ*	E		1468	4G15-5	A		☞7,8	12/91 ▸ 10/96	MD972905	**819942**	82	Y
1.6	*CD4ASNJ, CB4/ASND/ASNJ*	E		1597	4G92	M		☞4,9	05/92 ▸ 06/92	MD317015	**820194**	76	N
1.6	*CB4/ASRD/ASRJ*	E		1597	4G92	A		☞4,9	05/92 ▸ 06/92	MD317015	**820194**	76	N
1.6 i	*CB4WLRJ*	E		1597	4G92-01,4G92-0H	A			07/92 ▸ 2000	MD315301	**820512**	82	Y

• **New** Nouveau **Nuevo** Novo **Nuovo** Nieuw **Neu** Yeni Новый Nou

			cc			AC			OE	Valeo	(°)C	
MITSUBISHI (.../...)												
Lancer F (CB/CD) (92>96) (.../...)												
1.6 i	CD4WLNJ, CD4WLND, CB4WLNJ, CB4WLND	E	1597	4G92-01,4G92-0G,4G92-0H	M			06/92 ▸ 2000	MD315301	**820512**	82	Y
1.8 16V	CB5ASNG	E	1834	4G93-1	M		☞4,9	05/92 ▸ 06/92	MD170031	**820135**	76	Y
1.8 16V	CB5ASNG	E	1834	4G93-1	M			07/92 ▸ 12/96	MD337408	**820512**	82	Y
2.0 D	CB8/ASND/ASNJ/ASNM	D	1998	4D68-0E, 4D68-0A	M		☞4,9	05/92 ▸ 04/94	MD317015	**820194**	76	N
2.0 D	CB8WLNJ, CB8WLND	D	1998	4D68-0A,4D68-0E	M			05/94 ▸ 05/96	MD337408	**820512**	82	Y
Lancer F (CV)												
1500	C12/VLND/VLNJ	E	1468	4G15, 4G15-MPI, G15B	M		☞7,8	07/85 ▸ 03/92	MD972903	**820963**	88	N
1500	C12/VLND/VLNJ	E	1468	4G15	M		☞7,8	07/85 ▸ 03/92	MD972908	**819942**	82	Y
1500	C12VLKJ	E	1468	4G15, G15B, 4G15-MPI	A		☞7,8	07/87 ▸ 03/92	MD972903	**820963**	88	N
1500	C12VLKJ	E	1468	4G15	A		☞7,8	07/87 ▸ 03/92	MD972908	**819942**	82	Y
1800	C37/VLND/VLNJ	E	1755	4G37, G37B, 4G37-MPI	M		☞7,8	11/86 ▸ 03/92	MD972903	**820963**	88	N
1800 D	C14VLND	D	1795	4D65	M		☞4,7,8	07/85 ▸ 03/92	MD972909	**820496**	82	Y
Lancer (CS) (2003>)												
1.3 16V	CS1ASNJ	E	1299	4G13-6	M		☞4,9	06/03 ▸	MD346547	**820533**	88	Y
1.6 i 16V	CS3/ASNJ/WLNH/WLNJ	E	1584	4G18-6	M		☞4,9	06/03 ▸	MD346547	**820533**	88	Y
1.6 i 16V	CS3/ASRJ/WLRJ	E	1584	4G18-6	A		☞4,9	06/03 ▸	MD346547	**820533**	88	Y
2.0 i 16V	CS9WLNH, CS9WLNJ, CS9ASNH	E	1997	4G63-7	M			06/03 ▸	MD315301	**820512**	82	Y
Lancer Evolution												
2.0 i Turbo	CP9/ASND/ASNG	E	1997	4G63-7TC	M		☞4,9	01/98 ▸ 01/99	MD345617	**820135**	76	Y
Montero Sport												
2.5 TD	K94/WGNH/WNUF/WNUP	D	2477	4D56T-4P	M		☞4,9	08/98 ▸	MD335170	**820136**	82	Y
Outlander (2003>)												
2.0 i 16V,2.0 i Turbo 16V	CU2WXNM, CU2WXNH, CU2WXNX	E	1997	4G63-7T3,4G63-7TU	M			06/03 ▸ 12/08	MD315301	**820512**	82	Y
2.4 i 16V	CU5WXRM, CU5WXRH	E	2378	4G69-2	A			09/03 ▸ 12/08	MD315301	**820512**	82	Y
2.4 i 16V	CU5WXNM, CU5WXNH	E	2378	4G69-2	M			09/03 ▸ 12/08	MD315301	**820512**	82	Y
Outlander (2006>)												
3.0 V6	CW6W-XL	E	2998	6B31	A			11/06 ▸ 05/09	MD194988	●**820553**	82	Y
2.0 DI-D	CW8W-XJ	D	1968	BSY	M			11/06 ▸	MN980137	**820171**	87	Y
Pajero I (82>91)												
2.6,2.6 i	L04/2GNJ/2GVN/7GWM/7GWN	E	2555	4G54-1G, G54B	M		☞7,8	01/83 ▸ 06/91	MD972903	**820963**	88	N
3.0 i V6	L14/1GVN/6GWM	E	2972	6G72	M		☞7,8	11/88 ▸ 06/91	MD972903	**820963**	88	N
3.0 i V6	L146GWM	E	2972	6G72	A		☞7,8	11/88 ▸ 06/91	MD972903	**820963**	88	N
2.3 TD	L04/3GNT/3GVN/8GWN	D	2346	4D55T	M			01/83 ▸ 04/86	MD997605	**820942**	92	Y
2.5 TD	L04/4GNF/4GNT/4GVN/9GVM 9GWM/9GWN, L14/4GNF/4GVN 9GWM/9GWN	D	2477	4D56T	M			05/86 ▸ 06/91	MD997605	**820942**	92	Y
2.5 TD	L04/4GVR/9GWM/9GWR, L14 4GVR/9GWM	D	2477	4D56T	A			05/86 ▸ 06/91	MD997605	**820942**	92	Y
Pajero II (91>99)												
2.4 i	V41WNHE, V21/CNSE/WNHE	E	2351	4G64	M		☞7,8	12/90 ▸ 05/94	MD972903	**820963**	88	N
2.6 i	V12VNDL, V32WNHL	E	2555	4G54-1HL	M		☞7,8	04/91 ▸ 05/95	MD972903	**820963**	88	N
3.0 i V6	V43WGNX	E	2972	6G72-1	M		☞7,8	12/90 ▸ 05/92	MD972905	**819942**	82	Y
3.0 i V6	V23/CGNH/WGNX, V43/WGNX WNDE	E	2972	6G72-1	M		☞7,8	12/90 ▸ 05/94	MD972903	**820963**	88	N
3.0 i V6	V23/CGNH/WGNX/WNHV, V43 WGNX/WNHV	E	2972	6G72-8H	M		☞4,9	06/94 ▸ 05/97	MD174233	**820513**	82	Y
3.0 i V6	V43WGRX, V23/CGRH/WGRX	E	2972	6G72-1	A		☞7,8	12/90 ▸ 05/94	MD972903	**820963**	88	N
3.0 i V6	V23/CGRH/WGRX, V43/WGRX WRHV	E	2972	6G72-8H	A		☞4,9	06/94 ▸ 05/97	MD174233	**820513**	82	Y
3.5 i V6 24V	V25WGNX, V45WGNX	E	3497	6G74-B	M		☞4,9	11/93 ▸ 05/97	MD174233	**820513**	82	Y
3.5 i V6 24V	V25WGRX, V45WGRX	E	3497	6G74-B	A		☞4,9	11/93 ▸ 05/97	MD174233	**820513**	82	Y
2.5 D	V34VHND, V14/CNSR/VNDR	D	2477	4D56	M			04/91 ▸ 05/99	MD997606	**819884**	81	Y
2.5 D	V14VNDT, V34VHND	D	2477	4D56	M			04/91 ▸ 07/93	MD997605	**820942**	92	Y

• **New** Nouveau **Nuevo** Novo **Nuovo** Nieuw **Neu** Yeni Новый Nou

Valeo

MITSUBISHI (.../...)

Pajero II (91>99) (.../...)

2.5 TD	*V24/CNSF/CNSG/WGNC/WGND WGNH/WGNX/WNAF/WNBF/WNDF WNDG/WNHF/WNHG, V44/WGND WGNX/WNDF/WNDG/WNHF/WNHG*	D	2477	4D56T-1, 4D56T-2D, 4D56T-4P 4D56T-5, 4D56T-4	M		☞4,9	12/95 ▸	MD335170	**820136**	82	Y
2.5 TD	*V44WRHF*	D	2477	4D56T-1	A		☞4,9	12/95 ▸	MD335170	**820136**	82	Y
2.5 TD	*V44WRHF*	D	2477	4D56T-1	A			12/90 ▸ 11/95	MD315301	**820512**	82	Y
2.5 TD	*V44WGNX, V24WNAF, V44WNDF V24CNSF, V24WNBF V44WNHF, V24WGNX V24WNHF, V24WGNC V24WNDF*	D	2477	4D56T-1,4D56T-2D	M			08/95 ▸ 11/95	MD315301	**820512**	82	Y
2.5 TD		D	2477	4D56 T	M			04/91 ▸	MD997224	●**820771**	83	Y
2.8 D,2.8 TD	*V36VHND, V26/WGNC/WGNH WGNX/WNHF/WNHG, V46/WGNC WGNX/WNAF/WNBF/WNDF/WNDG WNHF/WNHG*	D	2835	4M40-0A, 4M40-2A, 4M40-0AZ	M		☞4,9	11/93 ▸	ME191593	**820194**	76	N
2.8 TD	*V46/WGRC/WGRX/WRBF/WRHF WRHG*	D	2835	4M40-0A, 4M40-2A	A		☞4,9	11/93 ▸	ME191593	**820194**	76	N

Pajero III (2000>)

3.5 GDI V6 24V	*V65/WMNH/WMNX, V75/WLNH WLNX*	E	3497	6G74-B	M		☞4,9	02/00 ▸	MD174233	**820513**	82	Y
3.5 GDI V6 24V	*V65/WMYH/WMYX, V75/WLYH WLYX*	E	3497	6G74-B	A		☞4,9	02/00 ▸	MD174233	**820513**	82	Y
2.5 TD	*V64/WMND/WMNH/WMNX, V74 WLND/WLNH/WLNX*	D	2477	4D56T	M		☞4,9	02/00 ▸	MD335170	**820136**	82	Y
3.2 DI-D	*V68/WMNC/WMND/WMNH/WMNX V78/WLNB/WLNC/WLND/WLNH WLNX*	D	3200	4M410A, 4M41	M		☞4,9	02/00 ▸	ME191593	**820194**	76	N
3.2 DI-D	*V68/WMYC/WMYH/WMYX, V78 WLYB/WLYC/WLYH/WLYX*	D	3200	4M41, 4M410A	A		☞4,9	02/00 ▸	ME191593	**820194**	76	N

Pajero Pinin (99>)

1.8 GDI 16V,1.8 i 16V	*H76WLRD, H66WMRD, H66WMRJ*	E	1834	4G93-D,4G93-H	A			08/99 ▸ 02/05	MD337408	**820512**	82	Y
1.8 GDI 16V,1.8 i 16V	*H76WLND, H66WMND, H66WMNJ*	E	1834	4G93-D,4G93-H	M			08/99 ▸ 02/05	MD337408	**820512**	82	Y
2.0 GDI 16V	*H77WLRJ, H67WMRJ*	E	1999	4G94-H	A			07/00 ▸ 02/05	MD337408	**820512**	82	Y
2.0 GDI 16V	*H77WLNJ, H67WMNJ*	E	1999	4G94-H	M			07/00 ▸ 02/05	MD337408	**820512**	82	Y

Pajero Sport (98>)

2.5 TD	*K94/WGNH/WNUF/WNUP*	D	2477	4D56T-4P-115, 4D56T-4P	M		☞4,9	08/98 ▸	MD335170	**820136**	82	Y

Shogun 1 (L0/1)

2.6	*L04/2GNJ/2GVN/7GWM/7GWN*	E	2555	4G54-1G	M		☞7,8	01/83 ▸ 06/91	MD972903	**820963**	88	N
3.0 i V6	*L146GWM*	E	2972	6G72-1F	M		☞7,8	11/88 ▸ 06/91	MD972903	**820963**	88	N
3.0 i V6	*L146GWM*	E	2972	6G72-1F	A		☞7,8	11/88 ▸ 06/91	MD972903	**820963**	88	N
2.3 TD	*L04/3GNT/3GVN/8GWN*	D	2346	4D55T	M			01/83 ▸ 04/86	MD997605	**820942**	92	Y
2.5 TD	*L04/4GVN/9GWM/9GWN, L14 4GVN/9GWM/9GWN*	D	2477	4D56-14, 4D56-05, 4D56-09	M			05/86 ▸ 06/91	MD997605	**820942**	92	Y
2.5 TD	*L149GWM, L04/9GWM/9GWR*	D	2477	4D56-05, 4D56-14, 4D56-09	A			05/86 ▸ 06/91	MD997605	**820942**	92	Y

Shogun 2 (V2/4)

3.0 i V6	*V23WGNX, V43WGNX*	E	2972	6G72-1	M		☞7,8	12/90 ▸ 05/94	MD972903	**820963**	88	N
3.0 i V6	*V23/CGNH/WGNX, V43/WGNX WNHV*	E	2972	6G72-8H	M		☞4,9	06/94 ▸ 05/97	MD174233	**820513**	82	Y
3.0 i V6	*V23WGRX, V43WGRX*	E	2972	6G72-1	A		☞7,8	12/90 ▸ 05/94	MD972903	**820963**	88	N
3.0 i V6	*V23/CGRH/WGRX, V43/WGRX WRHV*	E	2972	6G72-8H	A		☞4,9	06/94 ▸ 05/97	MD174233	**820513**	82	Y
3.5 i V6	*V25WGNX, V45WGNX*	E	3497	6G74	M		☞4,9	11/93 ▸ 05/97	MD174233	**820513**	82	Y
3.5 i V6	*V25WGRX, V45WGRX*	E	3497	6G74	A		☞4,9	11/93 ▸ 05/97	MD174233	**820513**	82	Y
2.5 D	*V34VHND, V14/CNSR/VNDR*	D	2477	4D56	M			04/91 ▸ 05/99	MD997606	**819884**	81	Y
2.5 TD	*V44WRHF*	D	2477	4D56T-1	A			12/90 ▸ 11/95	MD315301	**820512**	82	Y
2.5 TD	*V24WGNX, V44WGNX, V24WNHF*	D	2477	4D56T-1	M			08/95 ▸ 11/95	MD315301	**820512**	82	Y
2.5 TD	*V44WGNX, V24/WGNX/WNHF WNHG*	D	2477	4D56T-4P, 4D56T-1	M		☞4,9	12/95 ▸	MD335170	**820136**	82	Y

• **New** Nouveau **Nuevo** Novo **Nuovo** Nieuw **Neu** Yeni Новый Nou

Type Ctr.		cc		AC			OE	Valeo	(°)C	
MITSUBISHI (.../...)										
Shogun 2 (V2/4) (.../...)										
2.5 TD *V44WRHF*	D	2477	4D56T-1	A		☞4,9	12/95 ▸	MD335170	**820136**	82	Y
2.8 D,2.8 TD *V36VHND, V26/WGNX, V46 WGNX/WNHF/WNHG*	D	2835	4M40-2A, 4M40-0A, 4M40-0AZ	M		☞4,9	11/93 ▸	ME191593	**820194**	76	N
2.8 TD *V46/WGRX/WRHF/WRHG*	D	2835	4M40-2A, 4M40-0A	A		☞4,9	11/93 ▸	ME191593	**820194**	76	N
Shogun 3 (V6/7)										
3.5 GDI V6 24V *V65/WMNH/WMNX, V75/WLNH WLNX*	E	3497	6G74-B	M		☞4,9	02/00 ▸	MD174233	**820513**	82	Y
3.5 GDI V6 24V *V65/WMYH/WMYX, V75/WLYH WLYX*	E	3497	6G74-B	A		☞4,9	02/00 ▸	MD174233	**820513**	82	Y
2.5 TD *V64/WMNH/WMNX*	D	2477	4D56T	M		☞4,9	02/00 ▸	MD335170	**820136**	82	Y
3.2 DI-D *V68/WMNC/WMNH/WMNX, V78 WLNB/WLNC/WLNH/WLNX*	D	3200	4M410A	M		☞4,9	02/00 ▸	ME191593	**820194**	76	N
3.2 DI-D *V68/WMYC/WMYH/WMYX, V78 WLYB/WLYC/WLYH/WLYX*	D	3200	4M410A	A		☞4,9	02/00 ▸	ME191593	**820194**	76	N
Shogun Pinin										
1.8 GDI 16V,1.8 i 16V *H66WMRD, H76WLRD, H66WMRJ*	E	1834	4G93-D,4G93-H	A			08/99 ▸ 2005	MD337408	**820512**	82	Y
1.8 GDI 16V,1.8 i 16V *H66WMND, H76WLND, H66WMNJ*	E	1834	4G93-D,4G93-H	M			08/99 ▸ 2005	MD337408	**820512**	82	Y
2.0 GDI 16V *H67WMRJ, H77WLRJ*	E	1999	4G94-H	A			07/00 ▸ 2005	MD337408	**820512**	82	Y
2.0 GDI 16V *H77WLNJ, H67WMNJ*	E	1999	4G94-H	M			07/00 ▸ 2005	MD337408	**820512**	82	Y
Sigma										
3.0 i V6 24V *F16ASNU*	E	2972	6G724	M		☞4,9	10/90 ▸	MD174233	**820513**	82	Y
3.0 i V6 12V *F07WLNU, F16ASNH*	E	2972	6G721	M		☞7,8	12/90 ▸	MD997604	**820963**	88	N
3.0 i V6 12V *F07WLRU, F16ASRH*	E	2972	6G721	A		☞7,8	12/90 ▸	MD997604	**820963**	88	N
3.0 i V6 24V *F16/ASNX/ASRP/ASRX*	E	2972	6G724	A		☞4,9	12/90 ▸	MD174233	**820513**	82	Y
Space Gear										
2.0 i 16V *PA3WNLE*	E	1997	4G63-6M	A			12/94 ▸ 02/98	MD337408	**820512**	82	Y
2.0 i 16V *PA3WNLN, PA3WNLZ*	E	1997	4G63-6F	M			12/94 ▸ 02/98	MD337408	**820512**	82	Y
2.4 i 16V *PA4WHSE, PA4WNSE*	E	2351	4G64-2	A			12/94 ▸ 11/98	MD337408	**820512**	82	Y
2.4 i 16V *PA4WHSN, PD4WNLN, PA4WNSN PA4WNLN*	E	2351	4G64-2	M			12/94 ▸ 11/98	MD337408	**820512**	82	Y
2.5 TD *PC5WHSZ*	D	2477	4D56T-2E	M			12/94 ▸ 05/95	MD997605	**820942**	92	Y
2.5 TD *PD5WNLN, PA5/WNLN/WNLZ*	D	2477	4D56T-2E, 4D56T-4	M		☞4,9	12/95 ▸	MD335170	**820136**	82	Y
2.5 TD *PA5WNLZ, PD5WNLN*	D	2477	4D56T-2E,4D56T-4	M			12/94 ▸ 11/95	MD315301	**820512**	82	Y
Space Runner										
1.8 i *N21WSNU, N11/WSNJ/WSNU*	E	1834	4G93, 4G93-0M3	M		☞4,9	06/91 ▸	MD170031	**820135**	76	Y
1.8 i *N11WSRU*	E	1834	4G93, 4G93-0M3	A		☞4,9	06/91 ▸	MD170031	**820135**	76	Y
1.8 i *N11WSRU*	E	1834	4G93	A			02/92 ▸ 2002	MD337408	**820512**	82	Y
1.8 i *N11WSNU, N11WSNJ, N21WSNU*	E	1834	4G93	M			02/92 ▸ 2002	MD337408	**820512**	82	Y
2.0 i *N63WSRU, N63WSRF, N63WSRD*	E	1997	4G63-MPI	A			05/99 ▸ 2002	MD315301	**820512**	82	Y
2.0 i *N63WSNU, N63WSND, N63WSNF*	E	1997	4G63-MPI	M			05/99 ▸ 2002	MD315301	**820512**	82	Y
2.4 GDi *N64WSRH, N64WSRJ, N64WSRG*	E	2351	4G64-414	A			05/99 ▸ 2002	MD315301	**820512**	82	Y
2.4 GDi *N64WSNH, N64WSNJ, N64WSNG*	E	2351	4G64-414	M			05/99 ▸ 2002	MD315301	**820512**	82	Y
2.0 TD *N18/WSNJ/WSNU*	D	1998	4D68T	M		☞4,9	06/92 ▸	MD317015	**820194**	76	N
Space Star										
1.3 i 16V *DG1/ALND/ALNJ/ALNP*	E	1299	4G13-16	M		☞4,9	06/98 ▸	MD346547	**820533**	88	Y
1.6 i 16V *DG3/ALND/ALNJ/ALNM/ALNP*	E	1597	4G18	M		☞4,9	04/01 ▸	MD346547	**820533**	88	Y
1.6 i 16V *DG3/ALRD/ALRJ*	E	1597	4G18	A		☞4,9	04/01 ▸	MD346547	**820533**	88	Y
1.8 GDi 16V *DG5/ALND/ALNJ*	E	1834	4G93-H	M			10/98 ▸	MD338234	**820552**	85	Y
1.8 GDi,1.8 GDi 16V *DG5ALRJ, DG5ALRP, DG5ALRM*	E	1834	4G93,4G93-H	A			06/00 ▸ 2004	MD315301	**820512**	82	Y
1.8 GDi,1.8 GDi 16V *DG5ALNP, DG5ALNM, DG5ALNJ DG5ALND*	E	1834	4G93,4G93-H	M			06/00 ▸ 2004	MD315301	**820512**	82	Y
Space Wagon (86>91)										
1.8 *D05/VLNU/WLNU*	E	1755	4G37	M		☞7,8	10/83 ▸ 04/91	MD972903	**820963**	88	N
1.8 *D05WLKU*	E	1755	4G37	A		☞7,8	10/83 ▸ 04/91	MD972903	**820963**	88	N
2.0 *D04/WLNU, D08/WLGU/WLNU*	E	1997	4G63-3J, 4G63-34, G63B0	M		☞7,8	02/85 ▸ 04/91	MD972903	**820963**	88	N
2.0 *D04WLKU*	E	1997	G63B0, 4G63-34	A		☞7,8	06/86 ▸ 04/91	MD972903	**820963**	88	N

• **New** Nouveau **Nuevo** Novo **Nuovo** Nieuw **Neu** Yeni Новый Nou

Type Ctr.		cc		AC		2 3	OE	Valeo	(°)C	
MITSUBISHI (.../...)										
L200 (K6/7) (.../...)										
2.5 D,2.5 TD *K64/TCEN/TEND/TENS/TJEN TYND/TZND, K74/TENS/TJEN*	D	2477	4D56, 4D56T-4P-115	M		01/96 ▸	MD997606	**819884**	81	Y
2.5 TD *K64/TCEN/TEND/TJEN, K74 TCEN/TEND/TGCE/TGJE/TJEN TYND/TZND*	D	2477	4D56T+, 4D56T, 4D56T-5	M	☞4,9	01/96 ▸	MD335170	**820136**	82	Y
2.5 TD *K64/TJER, K74/TGJE/TJER*	D	2477	4D56T-5, 4D56T	A	☞4,9	02/99 ▸	MD335170	**820136**	82	Y
L300 (P0/1/2/3)										
1.4 *P01WSCR*	E	1410	4G33	M	☞7,8	03/90 ▸ 06/90	MD972905	**819942**	82	Y
1.6 *P12VJLZ, P02/VGLZ/VLZL*	E	1597	4G32	M	☞7,8	11/86 ▸ 05/94	MD972903	**820963**	88	N
1.6 *P02/VGLZ, P12/VJLZ/WHCL*	E	1597	4G32	M	☞7,8	03/90 ▸ 05/94	MD972905	**819942**	82	Y
2.0 *P03/VGLZ/VLZA/WHSN/WLNX/WLZU/WLZX WSNP, P13/VHLZ/VJLZ, P23/VLNL/WLNX*	E	1997	4G63, G63B	M	☞7,8	11/86 ▸ 06/95	MD972903	**820963**	88	N
2.0 *P03/WLZX, P23WSNU, P13/VHLZ/VJLZ*	E	1997	G63B, 4G63	M	☞7,8	11/86 ▸ 06/95	MD972905	**819942**	82	Y
2.0 *P13VHLZ*	E	1997	4G63	M	☞4,9	06/94 ▸ 06/95	MD170031	**820135**	76	Y
2.0 *P03WLRX*	E	1997	4G63	A	☞7,8	11/91 ▸ 06/95	MD972905	**819942**	82	Y
2.0 *P03WLRX*	E	1997	4G63	A	☞7,8	11/91 ▸ 06/95	MD972903	**820963**	88	N
2.0,2.0 i *P13VJLN, P13VJLZ, P03WLZX P03VGLZ, P03VLNE P03VLZE, P03VGLN P03VLZA, P13VHLZ*	E	1997	4G63	M		06/94 ▸ 05/04	MD337408	**820512**	82	Y
2.4 i *P14VJLZ, P04/VGLZ/WHSN/WLNX/WLZX P24/VLNA/WLNX*	E	2351	G64B18, 4G64	M	☞7,8	11/86 ▸ 05/96	MD972903	**820963**	88	N
2.5 D,2.5 TD *P05/VGLN/VGLZ/VLZA/VLZL VLZR/WLZX, P15/VHLN/VHLZ VJLN/VJLZ/WHLN/WHLZ P45VJLN, P25/VGLN/WLNX*	D	2477	4D56, 4D56T	M		11/86 ▸	MD997606	**819884**	81	Y
2.5 TD	D	2477	4D56 T	M		11/86 ▸	MD997224	●**820771**	83	Y
2.5 TD *P45VJLN, P25/VGLN/WLNX*	D	2477	4D56T	M		12/87 ▸ 07/95	MD997605	**820942**	92	Y
L 300 (Truck) (94>2000)										
2.5 D *P15/TYNR/TYZA/TYZL/TYZR*	D	2477	4D56-4, 4D56-2	M		06/94 ▸ 07/95	MD997605	**820942**	92	Y
2.5 D *P15/TYNL/TYNR/TYZA/TYZL/TYZR*	D	2477	4D56-4, 4D56-2	M		08/95 ▸ 04/00	MD997606	**819884**	81	Y
L400 (PA/PB/PD)										
2.0 i 16V *PA3VNLZ, PA3VNLN, PA3VGLZ PB3VHLZ, PB3VJLZ*	E	1997	4G63-6F,4G63-AF	M		12/94 ▸ 2001	MD337408	**820512**	82	Y
2.4 i 16V *PD4VNLN*	E	2351	4G64-2	M		12/94 ▸ 2001	MD337408	**820512**	82	Y
2.5 TD *PA5/VGLZ/VNLZ, PD5VGLN PB5/VHLZ/VJLZ*	D	2477	4D56T-2D	M		12/94 ▸ 07/95	MD997605	**820942**	92	Y
2.5 TD *PA5/VGLZ/VNLZ, PD5VGLN PB5/VHLZ/VJLZ*	D	2477	4D56T-2D	M		08/95 ▸	MD997606	**819884**	81	Y
NISSAN										
100 NX Coupé (90>95)										
1.6 *GAYALUA, HAYALUA*	E	1597	GA16DS	A		10/90 ▸ 10/92	2120077A00	**820178**	88	Y
1.6 *GAYALUF, HAYALUF*	E	1597	GA16DS	M		10/90 ▸ 10/92	2120077A00	**820178**	88	Y
1.6 *GAYALUF, HAYALUF*	E	1597	GA16DS	M		10/90 ▸ 10/92	2120077A60	●**820524**	76	Y
1.6 i 16V *GAYALUF, HAYALUF*	E	1597	GA16DE	M	☞8	10/92 ▸ 10/94	2120077A65	**819911**	82	Y
1.6 i 16V *GAYALUF, HAYALUF*	E	1597	GA16DE	M		10/92 ▸ 10/94	2120077A05	**820510**	82	Y
1.6 *GAYALUA, HAYALUA*	E	1597	GA16DS	A		10/90 ▸ 10/92	2120077A60	●**820524**	76	Y
1.6 i 16V *GAYALUA, HAYALUA*	E	1597	GA16DE	A	☞8	10/92 ▸ 10/94	2120077A65	**819911**	82	Y
1.6 i 16V *GAYALUA, HAYALUA*	E	1597	GA16DE	A		10/92 ▸ 10/94	2120077A05	**820510**	82	Y
2.0 i 16V *GBYALWF, HBYALWF*	E	1998	SR20DEB	M	☞4,9	10/90 ▸ 10/92	2120053J00	**820181**	76	N
2.0 i 16V *GBYALWF, HBYALWF*	E	1998	SR20DEB	M	☞4,9	10/92 ▸ 10/94	2120060J11	**820176**	82	N
200 SX (S13) (88>94)										
1.8 Turbo 16V *RLS13FT*	E	1809	CA18DT, CA18DTAP	M	☞7,8	09/88 ▸ 06/94	21200V0201	**819966**	82	Y
1.8 Turbo 16V *RLS13AT*	E	1809	CA18DT, CA18DTAP	A	☞7,8	09/88 ▸ 06/94	21200V0201	**819966**	82	Y
200 SX (S14) (94>)										
2.0 Turbo 16V *GBYALRA*	E	1998	SR20DET	A	☞4,9	04/94 ▸	212000C811	**820181**	76	N

• **New** Nouveau **Nuevo** Novo **Nuovo** Nieuw **Neu** Yeni Новый Nou

Type Ctr.		cc		AC		2 3	OE	Valeo	(°)C	
NISSAN (.../...)										
Almera Tino (2003>) (.../...)										
1.8 i 16V *FV10EG*	E	1769	QG18DE	A		02/03 ▸	212009F600	**819945**	82	Y
2.2 DCi 16V *FV10TG, YV10TG*	D	2184	YD22DDTI-114, YD22DDTI	M	☞4,9	02/03 ▸	21200BN301	**820513**	82	Y
Bluebird (910) (80>84)										
1.6 *TL910Q*	E	1595	L16	M	☞7,8	04/80 ▸ 03/84	21200P7906	**819967**	88	Y
1.8 *910/, WMLJ910, ML910/FQ/Q*	E	1770	L18S	M	☞7,8	04/80 ▸ 03/84	21200P7906	**819967**	88	Y
1.8 *ML910AQ*	E	1770	L18S	A	☞7,8	04/80 ▸ 03/84	21200P7906	**819967**	88	Y
2.0 D *ELJ910D, WELJ910*	D	1952	LD20	M	☞8	04/80 ▸ 03/84	21200W3300	**819864**	82	Y
Bluebird (T72) (88>90)										
1.6 *LT72DFQ, LT72FQ, LT72SFQ, FLT72/DF FQ*	E	1598	CA16S	M	☞7,8	09/88 ▸	21200Q9000	**819967**	88	Y
1.8 Turbo,1.8 i Turbo *FPLT72D, PLT72DF*	E	1809	CA18ET, CA18T	M	☞7,8	09/88 ▸	21200Q9000	**819967**	88	Y
2.0,2.0 i *FHLT7/2D/2F/2X, HLT72/DF FE/FQ/XF*	E	1973	CA20S, CA20E	M	☞7,8	12/85 ▸	21200Q9000	**819967**	88	Y
2.0,2.0 i *FHLT7/2A/2X, HLT72/AE/AQ XA*	E	1973	CA20E, CA20S	A	☞7,8	09/88 ▸	21200Q9000	**819967**	88	Y
Bluebird (U11) (84>86)										
1.8 *MU11HAU*	E	1809	CA18N	A	☞7,8	06/86 ▸ 1988	21200V0201	**819966**	82	Y
2.0 *WYLU1/1D/1G/1H*	E	1973	CA20E	M	☞7,8	04/86 ▸ 1987	21200P7906	**819967**	88	Y
2.0 *WYLU1/1G/1H*	E	1973	CA20E	A	☞7,8	04/86 ▸ 1987	21200P7906	**819967**	88	Y
2.0 D *WELJU11, WELU11H, ELU11/DF/HF*	D	1952	LD20	M	☞8	10/83 ▸ 10/85	21200W3300	**819864**	82	Y
Cedric (330)										
2.0 *330QTU*	E	1998	L20	M	☞7,8	09/74 ▸ 05/79	21200A3005	**819967**	88	Y
2.6 *H330Q/U, KH330HT, WH330VT, H330V/TU U*	E	2565	L26	M	☞7,8	09/74 ▸ 06/77	21200A3005	**819967**	88	Y
2.6 *H330VAT, KH330HA, WH330VA, H330Q/AU*	E	2565	L26	A	☞7,8	09/74 ▸ 06/77	21200A3005	**819967**	88	Y
2.8 *P330QU, KP330/HT, VP330VT, WP330VT P330V/TQ/TR/TU/U*	E	2753	L28	M	☞7,8	06/77 ▸ 05/79	21200A3005	**819967**	88	Y
2.8 *P330QAU, KP330/HA, VP330VA, WP330VA P330V/AT/AU*	E	2753	L28	A	☞7,8	06/77 ▸ 05/79	21200A3005	**819967**	88	Y
2.2 D *Q330SU*	D	2164	SD22	M	☞7,8	09/74 ▸ 05/79	21200A3005	**819967**	88	Y
Cedric (430)										
2.8 *PL430VF, WPL430V*	E	2753	L28	M	☞7,8	05/79 ▸ 09/83	21200P7906	**819967**	88	Y
2.8 *PL430VA*	E	2753	L28	A	☞7,8	05/79 ▸ 09/83	21200P7906	**819967**	88	Y
Cedric (Y30)										
3.0 *KPLY3/0X, PLY30/F/FR/JF/XF, WPLY3 0F/0J*	E	2960	VG30E, VG30S	M	☞8	02/87 ▸ 06/88	2120042L01	**819864**	82	Y
3.0 *KPLY3/0X, WPLY30J, PLY30/JA/JF*	E	2960	VG30S, VG30E	A	☞8	02/87 ▸ 06/88	2120042L01	**819864**	82	Y
2.3 D *RLY30/F/SC/SF*	D	2289	SD23	M		10/83 ▸ 06/88	2120058G04	**820942**	92	Y
2.8 D *HLY30JF*	D	2793	LD28	M	☞8	02/84 ▸ 06/88	21200W3300	**819864**	82	Y
2.8 D *HLY30JA*	D	2793	LD28	A	☞8	02/84 ▸ 06/88	21200W3300	**819864**	82	Y
Cherry (E10) (71>76)										
1.0 *LE10TDL*	E	988	A10	M	☞7,8	04/71 ▸ 04/76	21200A3005	**819967**	88	Y
1.0 *LE10RTD, KLE10/TD, LE10TDL, LE10S RT/TD, WLE10/RT/SR*	E	988	A10	M	☞7,8	04/71 ▸ 04/76	2120078500	**819966**	82	Y
1.2 *KPLE1/0T, PLE10/RT/TD*	E	1171	A12	M	☞7,8	10/72 ▸ 04/76	2120078500	**819966**	82	Y
1.2 *PLE10TD*	E	1171	A12	M	☞7,8	01/74 ▸ 04/76	21200A3005	**819967**	88	Y
Cherry (F10) (75>79)										
1.0 *BF10R/Y, BF10S/RU/RY/U, WBF10/SU/Y*	E	988	A10	M	☞7,8	02/75 ▸ 1979	21200H7800	**819966**	82	Y
1.0 *WBF10Y*	E	988	A10	M	☞7,8	02/75 ▸ 1979	21200A3005	**819967**	88	Y
1.2 *F10U, F10Y, KF10U, F10RY*	E	1171	A12	M	☞7,8	02/75 ▸ 1979	21200H7800	**819966**	82	Y
1.2 *F10RY*	E	1171	A12	M	☞7,8	02/75 ▸ 1979	21200A3005	**819967**	88	Y
1.2 *F10A, F10ARY*	E	1171	A12	A	☞7,8	02/75 ▸ 1979	21200H7800	**819966**	82	Y
Cherry (N10) (79>83)										
1.0 *KNLN10Q, TBLN10R, VBLN10Q, BLN10 LQ/Q/RQ/RS*	E	988	A10	M	☞7,8	10/78 ▸ 07/83	21200H7800	**819966**	82	Y

• **New** Nouveau **Nuevo** Novo **Nuovo** Nieuw **Neu** Yeni Новый Nou

Valeo

Type Ctr.		CC		AC		2 3	OE	Valeo	(°)C	
NISSAN (.../...)										
Cherry (N10) (79>83) (.../...)										
1.0 *KNLN10Q, TBLN10R, VBLN10Q, BLN10 LQ/Q/RQ/RS*	E	988	A10	M		☞7,8	10/78 ▸ 07/83	21200V0105	**819967**	88	Y
1.2 *LN10HQ, KLN10/HF, LN10Q, LN10L/FQ HF/HQ/Q, LN10R/HQ/Q*	E	1171	A12	M		☞7,8	10/78 ▸ 07/83	21200V0105	**819967**	88	Y
1.2 *LN10, LN10HQ, KLN10/F/HF, LN10Q LN10L//FQ/HF/HQ/Q, TLN10RS, LN10R HQ/Q*	E	1171	A12	M		☞7,8	10/78 ▸ 07/83	21200H7800	**819966**	82	Y
1.2 *LN10A, KLN10/A/HA, LN10L/A/AQ/HA*	E	1171	A12	A		☞7,8	10/78 ▸ 07/83	21200H7800	**819966**	82	Y
1.2 *KLN10/HA, LN10L/AQ/HA*	E	1171	A12	A		☞7,8	10/78 ▸ 07/83	21200V0105	**819967**	88	Y
1.4 *KHLN10H, HLN10/LH/RH*	E	1397	A14	M		☞7,8	08/80 ▸ 07/83	21200V0205	**819967**	88	Y
1.4 *HLN10LH*	E	1397	A14	A		☞7,8	08/80 ▸ 07/83	21200V0205	**819967**	88	Y
Cherry (N12) (82>86)										
1.0 *RBLN12L*	E	988	E10	M		☞8	04/82 ▸ 12/86	21200V0206	**819846**	88	Y
1.0 *RBN12, RBLN1/2L/2S/2Y*	E	988	E10	M		☞7,8	04/82 ▸ 12/86	21200V0201	**819966**	82	Y
1.3 *RPLN12L*	E	1270	E13	M		☞8	04/82 ▸ 12/86	21200V0206	**819846**	88	Y
1.3 *RPN12, RPLN1/2H/2L/2Y*	E	1270	E13	M		☞7,8	04/82 ▸ 12/86	21200V0201	**819966**	82	Y
1.3 *RPLN1/2H/2L/2Y*	E	1270	E13	A		☞7,8	04/82 ▸ 12/86	21200V0201	**819966**	82	Y
1.5 *RHLN12L*	E	1488	E15	M		☞8	04/82 ▸ 12/86	21200V0206	**819846**	88	Y
1.5,1.5 Turbo *ORHN1/2, RHLN1/2H/2L RHN12//L*	E	1488	E15T, E15	M		☞7,8	04/82 ▸ 12/86	21200V0201	**819966**	82	Y
1.5 *RHLN1/2H/2L*	E	1488	E15	A		☞7,8	04/82 ▸ 12/86	21200V0201	**819966**	82	Y
1.6 *MLN12/, RMLN1/2H/2L*	E	1597	E16	M		☞8	06/85 ▸ 02/87	21200V0206	**819846**	88	Y
1.7 D *RSN12, RSLN1/2L/2Y*	D	1681	CD17	M		☞4,9	10/82 ▸ 12/86	2120016A05	**820176**	82	N
1.7 D *RSLN12L*	D	1681	CD17	A		☞4,9	10/82 ▸ 05/84	2120016A00	**820176**	82	N
Maxima QX (A32)										
2.0 i V6 24V *CLFUL/TF/VF*	E	1995	VQ20DE	M			10/94 ▸ 12/99	2120031U13	**820596**	82	N
2.0 i V6 24V *CLFULVA*	E	1995	VQ20DE	A			10/94 ▸ 12/99	2120031U13	**820596**	82	N
3.0 i V6 24V *CLHULVF*	E	2988	VQ30DE	M			10/94 ▸ 12/99	2120031U13	**820596**	82	N
3.0 i V6 24V *CLHULVA*	E	2988	VQ30DE	A			10/94 ▸ 12/99	2120031U13	**820596**	82	N
Maxima QX (A33)										
2.0 i V6 24V	E	1995	VQ20DE	M			01/00 ▸	2120031U13	**820596**	82	N
2.0 i V6 24V	E	1995	VQ20DE	A			01/00 ▸	2120031U13	**820596**	82	N
3.0 i V6 24V	E	2988	VQ30DE	M			01/00 ▸	2120031U13	**820596**	82	N
3.0 i V6 24V	E	2988	VQ30DE	A			01/00 ▸	2120031U13	**820596**	82	N
Micra (K10) (82>92)										
1.0 *LK10A, LK10AQ, LK10LAQ, LK10LA*	E	988	MA10,MA10S	A			11/82 ▸ 11/92	2120001B00	**820042**	88	Y
1.0 *LK10SQ, LK10LFQ, LK10LQ, LK10Q LK10LSQ, LK10F, LK10FQ, LK10LS LK10LF, LK10S*	E	988	MA10,MA10S	M			11/82 ▸ 11/92	2120001B00	**820042**	88	Y
1.2 *HLK10GA, HLK10LA, HLK10AQ, HLK10LG HLK10AQ*	E	1235	MA12	A			07/86 ▸ 11/92	2120001B00	**820042**	88	Y
1.2 *HLK10SF, HLK10LG, HLK10GF, HLK10FQ HLK10LF, 51ZHLK1, HLK10LS*	E	1235	MA12	M			07/86 ▸ 11/92	2120001B00	**820042**	88	Y
Micra (K11) (92>2000)										
1.5 D *ECAK11U, FCAK11U*	D	1527	TD15	M			04/98 ▸ 06/00	212006F900	**819897**	89	Y
Micra (K11) (2000>2002)										
1.5 D *K11*	D	1527	TD15	M			07/00 ▸ 12/02	212006F901	**819897**	89	Y
Micra (K12) (2003>)										
1.0 i 16V *EAAK12, FAAK12*	E	998	CG10DE	M		☞8	01/03 ▸ 05/05	21200BX000	**819846**	88	Y
1.2 i 16V *EBAK12, FBAK12*	E	1240	CG12DE	M		☞8	01/03 ▸ 05/05	21200BX000	**819846**	88	Y
1.2 i 16V *EBAK12, FBAK12*	E	1240	CG12DE	A		☞8	01/03 ▸ 05/05	21200BX000	**819846**	88	Y
1.4 i 16V *ECAK12, FCAK12*	E	1386	CGA3DE	M		☞8	01/03 ▸ 05/05	21200BX000	**819846**	88	Y
1.4 i 16V *ECAK12, FCAK12*	E	1386	CGA3DE	A		☞8	01/03 ▸ 05/05	21200BX000	**819846**	88	Y
1.5 dCi *EDAK12, FDAK12*	D	1461	K9K.7	M		☞4	01/03 ▸	11060BN700	**820537**	89	Y
Patrol 160 (80>85)										
2.8 *WMLG160, KML16/0F/0Q*	E	2753	L28	M		☞7,8	07/80 ▸ 1988	21200V0105	**819967**	88	Y

• **New** Nouveau **Nuevo** Novo **Nuovo** Nieuw **Neu** Yeni Новый Nou

Type Ctr.		cc		AC		2 3	OE	Valeo	(°)C	
NISSAN (.../...)										
Patrol 160 (80>85) (.../...)										
3.3 D,3.3 TD	*CRLG1/60, TRL160L URLG160, WRLG160, KRL16 0F/0Q*	D	3246	SD33T, SD33	M		☞8	07/80 ▸ 1988	2120096011	**819865**	88	Y
Patrol 260 (84>)										
2.8	*KML260X*	E	2753	L28	M		☞7,8	11/84 ▸ 02/89	21200P7901	**819966**	82	Y
2.8	*WMLG260, KML26/0F/0Q*	E	2753	L28	M		☞7,8	11/84 ▸ 02/89	21200P7906	**819967**	88	Y
3.0	*KSL260F, WSLG260*	E	2962	RB30S	M		☞8	03/89 ▸	2120042L01	**819864**	82	Y
3.3 D,3.3 TD	*CRLG260, GRL260X, JRL260X KRL260F, PRL260L TRL260L, WRLG260, ARLG2 60*	D	3246	SD33T, SD33	M		☞8	06/85 ▸ 02/89	2120096011	**819865**	88	Y
2.8 D,2.8 TD	*KPL260F, SPL260S, PPL260L JPL260S, APLG260*	D	2820	A428-II,A428T	M			03/89 ▸ 03/96	743000640	**819895**	82	Y
Patrol GR (Y61)										
3.0 TDi	*TWSSLFF, Y61*	D	2953	ZD30DDTI	M			02/00 ▸	212002W201	**820512**	82	Y
Patrol (Y61)										
3.0 TDi		D	2953	ZD30DDTI	A			08/04 ▸	212002W202	**820512**	82	Y
3.0 TDi		D	2953	ZD30DDTI	M			08/04 ▸	212002W202	**820512**	82	Y
Prairie (M10) (82>88)										
1.5	*BLM10HF*	E	1488	E15S	M		☞8	09/82 ▸ 09/88	21200V0206	**819846**	88	Y
1.5	*BLM10/KD/KH/LD*	E	1488	E15S	M		☞7,8	09/82 ▸ 09/88	21200P7901	**819966**	82	Y
1.8	*PLM10/HF/TH*	E	1809	CA18, CA18S	M		☞7,8	09/82 ▸ 09/88	21200V0201	**819966**	82	Y
1.8	*PLM10HF*	E	1809	CA18S, CA18	M		☞8	09/82 ▸ 09/88	21200V0206	**819846**	88	Y
1.8	*PLM10/HA/TH*	E	1809	CA18S, CA18	A		☞7,8	09/82 ▸ 09/88	21200V0201	**819966**	82	Y
2.0,2.0 i	*HLNM10H*	E	1973	CA20E, CA20S	M		☞8	01/86 ▸ 09/88	21200V0206	**819846**	88	Y
2.0,2.0 i	*HLNM10H*	E	1973	CA20S	M		☞7,8	01/86 ▸ 09/88	21200V0201	**819966**	82	Y
Prairie (M11) (88>95)										
2.0,2.0 i	*LM11Q, LM11J/EQ/Q, LM11T JE/JQ/Q, LNM11/JE/JQ/TJ*	E	1973	CA20S, CA20E	M		☞8	10/88 ▸ 03/92	21200V0206	**819846**	88	Y
2.0,2.0 i	*LM11A/Q, LM11J/AE/AQ LM11T/AQ/JA, LNM11/JA/TJ*	E	1973	CA20S, CA20E	A		☞8	10/88 ▸ 03/92	21200V0206	**819846**	88	Y
2.4 i	*HLM11/JE/TJ, HLNM1/1J/1T*	E	2389	KA24E	M		☞4,9	04/92 ▸ 07/94	2120053J00	**820181**	76	N
2.4 i	*HLM11/JE/TJ, HLNM1/1J/1T*	E	2389	KA24E	M		☞4,9	04/92 ▸ 07/94	2120060J00	**820176**	82	N
2.4 i	*HLM11/JE/TJ, HLNM1/1J/1T*	E	2389	KA24E	M		☞8	04/92 ▸ 07/94	2120040F00	**819846**	88	Y
2.4 i	*HLM11/JA/TJ*	E	2389	KA24E	A		☞4,9	04/92 ▸ 07/94	2120047R00	**820181**	76	N
2.4 i	*HLM11/JA/TJ*	E	2389	KA24E	A		☞4,9	04/92 ▸ 07/94	2120060J00	**820176**	82	N
2.4 i	*HLM11/JA/TJ*	E	2389	KA24E	A		☞8	04/92 ▸ 07/94	2120040F00	**819846**	88	Y
Primera (P10) (90>96)										
1.6,1.6 i 16V	*BAAP10, 0AYAL/FF, BAYAL BF/DF/FF, BBYALFF, BAYAR BF/DF, FAYAL/BF/DF/FF FAYAR/BF/DF, TAYAL/DF/FF*	E	1597	GA16DS, GA16DEC, GA16DE	M			02/90 ▸ 05/96	2120090J10	**819945**	82	Y
1.6	*TAYLDFW, TAYAL/DF/FF*	E	1597	GA16DS	M			07/90 ▸ 05/96	2120077A60	●**820524**	76	Y
1.6	*TAYALDF, TAYALFF, TAYLDFW*	E	1597	GA16DS	M			07/90 ▸ 04/93	2120077A00	**820178**	88	Y
1.6	*TAYAL/DF/FF*	E	1597	GA16DEC	M		☞8	04/93 ▸ 05/96	2120077A65	**819911**	82	Y
1.6	*TAYAL/DF/FF*	E	1597	GA16DEC	M			04/93 ▸ 05/96	2120077A05	**820510**	82	Y
2.0,2.0 i	*BBYARDF, BBYAL/DF/GF FBYAL/DF/FF, FBYAR/DF/FF GE, TBYAL/DF/FF/GF*	E	1998	SR20DI	M		☞4,9	02/90 ▸ 05/96	2120093J00	**820181**	76	N
2.0,2.0 16V,2.0 e 16V 2.0 i,2.0 i 16V	*BBYARUF, BBYNLFF, BBYAL VF, FBYARUF, FBYAL/FF/NF TBYAL/DF/FF/GF*	E	1998	SR20DE, SR20DI	M		☞4,9	02/90 ▸ 05/96	2120093J10	**820176**	82	N
2.0,2.0 i	*BBYAL/FA/GA, BBYAR/DA/FA GA, FBYAL/FA/GA, FBYAR/FA GA, TBYAL/DA/DF/FA/FF/GA GF*	E	1998	SR20DI	A		☞4,9	02/90 ▸ 01/98	2120093J00	**820181**	76	N
2.0,2.0 i 16V	*TBYAL/DA/DF/FA/FF/GA/GF*	E	1998	SR20DI, SR20DE	A		☞4,9	07/90 ▸ 05/96	2120093J10	**820176**	82	N
2.0 D	*TVCAL/DF/FF*	D	1974	CD20	M		☞4,9	07/90 ▸ 05/96	2120057J05	**820533**	88	Y

• **New** Nouveau **Nuevo** Novo **Nuovo** Nieuw **Neu** Yeni Новый Nou

Type Ctr.		cc		AC		2 3	OE	Valeo	(°)C	

NISSAN (.../...)

Primera (P10) (90>96) (.../...)

2.0 D		D	1974	CD20	A		☞4,9	09/90 ▸ 05/96	2120057J05	**820533**	88	Y

Primera (P11) (96>2001)

1.6 i 16V	*BAYAL/DF/FF, FAYAL/DF/FF WAYAL/BF/DF/FF/GF/TF WAYAR/DF/TF*	E	1597	GA16DEB, GA16DEF	M			06/96 ▸ 02/02	2120086J01	**819945**	82	Y
1.8 i 16V		E	1769	QG18DE	M			06/99 ▸ 02/02	212009F600	**819945**	82	Y
2.0 i 16V		E	1998	SR20DE	M		☞4,9	06/99 ▸ 06/99	2120093J01	**820181**	76	N
2.0 i 16V		E	1998	SR20DE	M		☞4,9	06/99 ▸ 02/02	212009F500	**820176**	82	N
2.0 i 16V	*BBYAL/DF/FF/GF/TF/UF WBYAEGF, FBYAL/DF/FF/GF TF/UF, WBYAL/DF/FF/FW/GF TF, WBYAR/DF/FF/FW*	E	1998	SR20DE, SR20DEF	M		☞4,9	06/96 ▸ 02/02	212009F500	**820176**	82	N
2.0 i 16V	*BBYAL/DA/GA, FBYAL/DA/GA WBYAL/AW/FA/GA, WBYAR/DA FA*	E	1998	SR20DE, SR20DEF	A		☞4,9	06/96 ▸ 02/02	212009F500	**820176**	82	N
2.0 i 16V	*BBYAL/DA/GA, FBYAL/DA/GA*	E	1998	SR20DE	A		☞4,9	10/97 ▸ 06/99	2120093J01	**820181**	76	N
2.0 TD	*WVCALDF, WVCALGF, FVCALFF WVCARFF, FVCALDF WVCALFF, WVCARDF BVCALFF, BVCALDF*	D	1974	CD20T	M			06/96 ▸ 02/02	2120057J15	**820512**	82	Y

Primera (P12) (2001>)

1.6 i 16V		E	1596	QG16DE	M			03/02 ▸	212009F600	**819945**	82	Y
1.8 i 16V		E	1769	QG18DE	M			03/02 ▸	212009F600	**819945**	82	Y
1.8 i 16V		E	1769	QG18DE	A			03/02 ▸	212009F600	**819945**	82	Y
2.0 i 16V		E	1998	QR20DE	M		☞4,9	02/01 ▸	212006N210	**820176**	82	N
2.0 i 16V	*BDAAR/BZ/SZ, TDAAR/BZ/SZ TDANR/BA/SA*	E	1998	QR20DE	A		☞4,9	02/01 ▸	212006N210	**820176**	82	N
1.9 dCi		D	1870	F9Q	M			01/03 ▸ 2006	11060AW300	**820527**	89	Y
2.2 dCi 16V		D	2184	YD22DDT	M		☞4,9	02/02 ▸	21200BN301	**820513**	82	Y

Pulsar (N12)

1.0	*RBLN12L*	E	988	E10	M		☞7,8	04/82 ▸	21200V0201	**819966**	82	Y
1.3	*PLN12/YF, RPLN1/2L/2Y*	E	1270	E13	M		☞7,8	04/82 ▸	21200V0201	**819966**	82	Y
1.5,1.5 Turbo	*KHLN12H, HLN12/HF, RHLN1 2H/2L*	E	1488	E15, E15T	M		☞7,8	04/82 ▸	21200V0201	**819966**	82	Y
1.5	*RHLN12L*	E	1488	E15	A		☞7,8	04/82 ▸	21200V0201	**819966**	82	Y
1.7 D	*RSLN12L*	D	1681	CD17	M		☞4,9	10/82 ▸	2120016A05	**820176**	82	N

Serena (C23M)

1.6 i	*AAYVL/EF/GF, EAYVL/EF/GF*	E	1597	GA16DEE	M			07/92 ▸	2120086J01	**819945**	82	Y
2.0 i	*EBYALGF, ABYAL/GF/HF*	E	1998	SR20DEA	M		☞4,9	07/92 ▸	212000C811	**820181**	76	N
2.0 D	*AVEVLGF, EVEVLEF, AVEALHF, EVEVLGF AVEVLEF, AVEVLHF*	D	1952	LD20	M			07/92 ▸ 07/94	21200Y9701	**820178**	88	Y
2.3 D	*EVFVLGF, AVFALHF, EVFVLEF, AVFVLEF*	D	2283	LD23	M			09/94 ▸ 11/01	2120005D12	**820178**	88	Y

Silvia (S110)

1.8 i	*HLS110J, KHLS110*	E	1770	L18E	M		☞7,8	02/78 ▸ 09/83	21200H7800	**819966**	82	Y
1.8 i	*KHLS110*	E	1770	L18E	M		☞7,8	02/78 ▸ 09/83	21200V0105	**819967**	88	Y
1.8 i	*HLS110J, KHLS110*	E	1770	L18E	A		☞7,8	02/78 ▸ 09/83	21200H7800	**819966**	82	Y
2.0 i	*ULS110J*	E	1990	FJ20E	M		☞7,8	12/81 ▸ 09/83	21200V0201	**819966**	82	Y

Silvia (S12)

1.8 Turbo	*RLS12/AT/SF*	E	1809	CA18ET	M		☞7,8	10/83 ▸ 08/88	21200P7906	**819967**	88	Y
1.8 Turbo	*RLS12AT*	E	1809	CA18ET	A		☞7,8	10/83 ▸ 08/88	21200P7906	**819967**	88	Y
2.0	*PLJS12F, RPJS12F*	E	1973	CA20E	M		☞7,8	10/83 ▸ 08/88	21200P7901	**819966**	82	Y
2.0	*PLJS12A, RPLJS12*	E	1973	CA20E	A		☞7,8	10/83 ▸ 08/88	21200P7901	**819966**	82	Y
2.0	*ULS12FE*	E	1990	FJ20E	M		☞7,8	10/83 ▸ 08/88	21200P7901	**819966**	82	Y
2.0	*RUL12SF, RULS12S*	E	1990	FJ20E	M		☞7,8	10/83 ▸ 08/88	21200P7906	**819967**	88	Y

Stanza (T11)

1.6	*LT11DQ*	E	1598	CA16S	M		☞7,8	08/81 ▸ 12/85	21200V0205	**819967**	88	Y
1.8	*PLT11FQ*	E	1809	CA18S	M		☞7,8	08/81 ▸ 12/85	21200V0205	**819967**	88	Y

• **New** Nouveau **Nuevo** Novo **Nuovo** Nieuw **Neu** Yeni Новый Nou

			cc			AC			OE	Valeo	(°)C	
NISSAN (.../...)												
Stanza (T11) (.../...)												
1.7 D	*SLT11FT*	D	1681	CD17	M		☞4,9	01/84 ▸ 12/85	2120016A05	**820176**	82	N
Sunny (B12) (86>90)												
1.6,1.6 i	*KGLB1/2H/2J, WGLNB12 WGLB1/2F/2H/2J*	E	1597	GA16I, GA16S	M			10/88 ▸ 05/90	2120077A60	●**820524**	76	Y
1.6,1.6 i	*KGLB1/2H/2J, WGLB1/2H/2J*	E	1597	GA16I, GA16S	A			10/88 ▸ 05/90	2120077A60	●**820524**	76	Y
1.7 D	*WSLB1/2F/2H*	D	1681	CD17	M		☞4,9	06/86 ▸ 05/90	2120016A05	**820176**	82	N
Sunny (N13) (86>90)												
1.0	*RMLN13L*	E	988	E10S	M		☞8	06/86 ▸ 10/88	21200V0206	**819846**	88	Y
1.0	*RMLN13L, FMLN1/3D/3L*	E	988	E10S	M		☞7,8	06/86 ▸ 10/88	21200V0201	**819966**	82	Y
1.3	*BLN13/DF/HF/LQ, FBLN1/3D/3H, RBLN1 3D/3F/3H/3L*	E	1270	E13S	M		☞7,8	06/86 ▸ 1990	21200V0201	**819966**	82	Y
1.3	*FBLN13D*	E	1270	E13S	M		☞8	06/86 ▸ 1990	21200V0206	**819846**	88	Y
1.3	*BLN13/DA/HA, FBLN1/3D/3H, RBLN1/3D 3H*	E	1270	E13S	A		☞7,8	06/86 ▸ 1990	21200V0201	**819966**	82	Y
1.4	*FULN1/3D/3H, RULN1/3D/3H/3L, ULN13 DF/HF/LF*	E	1392	GA14S	M			10/88 ▸ 1990	2120077A60	●**820524**	76	Y
1.4	*FULN1/3H, ULN13HA, RULN1/3D/3H*	E	1392	GA14S	A			10/88 ▸ 1990	2120077A60	●**820524**	76	Y
1.5	*HLN13HF, FHLN1/3H, RHLN1/3D/3H*	E	1488	E15S	M		☞7,8	06/86 ▸ 10/88	21200V0201	**819966**	82	Y
1.5	*HLN13HF*	E	1488	E15S	M		☞8	06/86 ▸ 10/88	21200V0206	**819846**	88	Y
1.5	*HLN13HA, RHLN13H, FHLN1/3H*	E	1488	E15S	A		☞7,8	06/86 ▸ 10/88	21200V0201	**819966**	82	Y
1.6,1.6 i	*FGLN1/3D/3H/3W, GLNN13H GLN13/DF/HF/WF, RGLN1/3D 3H*	E	1597	GA16S, GA16I	M			10/88 ▸ 1990	2120077A60	●**820524**	76	Y
1.6,1.6 i	*FGLN1/3H/3W, RGLN13H GLN13/HA/WA*	E	1597	GA16S, GA16I	A			10/88 ▸ 1990	2120077A60	●**820524**	76	Y
1.6,1.6 16V	*ELN13/WF, FPLN1/3D/3H/3W PLNN13H, RELN13S RHLN13H, PLN13/DF/HF/WF*	E	1598	CA16D, E16S	M		☞7,8	06/86 ▸ 10/88	21200V0201	**819966**	82	Y
1.6,1.6 16V	*ELN13WF, PLN13HF*	E	1598	CA16D, E16S	M		☞8	06/86 ▸ 10/88	21200V0206	**819846**	88	Y
1.6	*FPLN1/3H, RPLN13H, PLN13/HA/WA*	E	1598	E16S	A		☞7,8	06/86 ▸ 10/88	21200V0201	**819966**	82	Y
1.8 16V	*RCLN13S*	E	1809	CA18D	M		☞8	10/88 ▸ 1990	21200V0206	**819846**	88	Y
1.8 16V	*FCLN13S, RCLN13S*	E	1809	CA18D	M		☞7,8	10/88 ▸ 1990	21200V0201	**819966**	82	Y
1.7 D	*RSLN13D, FSLN1/3D/3H, SLN13/DF/HF*	D	1681	CD17	M		☞4,9	06/86 ▸ 1990	2120016A05	**820176**	82	N
1.7 D	*SLN13HA*	D	1681	CD17	A		☞4,9	06/86 ▸ 10/88	2120016A05	**820176**	82	N
Sunny (N14) (90>95)												
1.4	*BAVAL/BF/DF/FF, EAVAL/BD/BF/DF/FF VAVALDF, FAVAL/DF/FF*	E	1392	GA14DS	M			10/90 ▸ 10/92	2120077A60	●**820524**	76	Y
1.4,1.4 i 16V	*BAVAL/BF/DF/FF, EAVAL/BD BF/DF/FF, VAVALDF, FAVAL DF/FF*	E	1392	GA14DS, GA14DE	M			10/92 ▸	2120077A05	**820510**	82	Y
1.4,1.4 i 16V	*BAVAL/BF/DF/FF, EAVAL/BD BF/DF/FF, VAVALDF, FAVAL DF/FF*	E	1392	GA14DS, GA14DE	M		☞8	10/92 ▸	2120077A65	**819911**	82	Y
1.4	*EAVALDA, FAVALFA, VAVALDA, BAVAL/FA*	E	1392	GA14DS	A			10/90 ▸ 10/92	2120077A60	●**820524**	76	Y
1.4,1.4 i 16V	*EAVALDA, BAVAL/DA/FA VAVALDA, FAVAL/DA/FA*	E	1392	GA14DE, GA14DS	A			10/92 ▸	2120077A05	**820510**	82	Y
1.4,1.4 i 16V	*EAVALDA, BAVAL/DA/FA VAVALDA, FAVAL/DA/FA*	E	1392	GA14DS, GA14DE	A		☞8	10/92 ▸	2120077A65	**819911**	82	Y
1.4	*BAVALFA, EAVALDA, VAVALDA, FAVALFA*	E	1392	GA14DS	A			10/90 ▸ 10/92	2120077A00	**820178**	88	Y
1.4	*FAVALDF, EAVALDF, EAVALBF, BAVALFF VAVALDF, BAVALDF, BAVALBF, EAVALBD FAVALFF, EAVALFF*	E	1392	GA14DS	M			10/90 ▸ 10/92	2120077A00	**820178**	88	Y
1.6	*BAYNLFF, EAYALFF, FAYALFF, BAYAL/FF*	E	1597	GA16DS	M			10/90 ▸	2120077A60	●**820524**	76	Y
1.6,1.6 i	*BAYNLFF, EAYALFF, FAYALFF BAYAL/DF/FF*	E	1597	GA16DS, GA16DEE	M			10/92 ▸	2120077A05	**820510**	82	Y
1.6,1.6 i	*BAYNLFF, EAYALFF, FAYALFF BAYAL/DF/FF*	E	1597	GA16DS, GA16DEE	M		☞8	10/92 ▸	2120077A65	**819911**	82	Y
1.6	*EAYALFA, FAYALFA, BAYAL/FA*	E	1597	GA16DS	A			10/90 ▸	2120077A60	●**820524**	76	Y
1.6,1.6 i	*EAYALFA, FAYALFA, BAYAL FA*	E	1597	GA16DS, GA16DEE	A		☞8	10/92 ▸	2120077A65	**819911**	82	Y

• **New** Nouveau **Nuevo** Novo **Nuovo** Nieuw **Neu** Yeni Новый Nou

											(°)C	
NISSAN (.../...)												
Sunny (N14) (90>95) (.../...)												
1.6,1.6 i	*EAYALFA, FAYALFA, BAYALFA*	E	1597	GA16DS, GA16DEE	A			10/92 ▸	2120077A05	**820510**	82	Y
1.6	*EAYALFA, FAYALFA, BAYALFA*	E	1597	GA16DS	A			10/90 ▸ 05/95	2120077A00	**820178**	88	Y
1.6	*BAYALFF, EAYALFF, BAYNLFF, FAYALFF*	E	1597	GA16DS	M			10/90 ▸ 05/95	2120077A00	**820178**	88	Y
2.0 16V	*EBYNLRF, EBYAL/UF, FBYALUF/UN*	E	1998	SR20DEB, SR20DET	M		☞4,9	10/90 ▸	2120053J00	**820181**	76	N
2.0 16V	*EBYAL/UF, FBYAL/UF/UN*	E	1998	SR20DEB	M		☞4,9	10/92 ▸	2120060J11	**820176**	82	N
2.0 D	*BVCAL/DF/FF, EVCAL/DF/FF, FVCAL/DFFF*	D	1974	CD20	M		☞4,9	10/90 ▸	2120057J05	**820533**	88	Y
2.0 D	*EVCALFF, BVCAL/DF/FF, FVCAL/DF/FF*	D	1974	CD20	M		☞4,9	10/90 ▸ 10/92	2120057J10	**820194**	76	N
Sunny (Y10) (90>96)												
1.6	*TAYNLFF, WAYALBF, TAYAL/DF/FF*	E	1597	GA16DS	M			10/90 ▸ 12/96	2120077A60	●**820524**	76	Y
1.6,1.6 i 16V	*TAYNLFF, WAYALBF, TAYALDF/FF*	E	1597	GA16DE, GA16DS	M			10/90 ▸ 12/96	2120077A05	**820510**	82	Y
1.6,1.6 i 16V	*TAYNLFF, WAYALBF, TAYALDF/FF*	E	1597	GA16DS, GA16DE	M		☞8	10/90 ▸ 12/96	2120077A65	**819911**	82	Y
1.6	*WAYALBF, TAYALFF, TAYNLFF, TAYALDF*	E	1597	GA16DS	M			11/90 ▸ 07/95	2120077A00	**820178**	88	Y
1.7 D	*WVAALBF*	D	1681	CD17	M		☞4,9	05/92 ▸ 07/95	2120016A05	**820176**	82	N
1.7 D	*WVAALBF*	D	1681	CD17	M		☞4,9	07/95 ▸ 04/96	2120057J05	**820533**	88	Y
2.0 D	*TVCALFF, TVCALDF*	D	1974	CD20	M			11/90 ▸ 12/96	2120057J15	**820512**	82	Y
Terrano (WD21) (87>93)												
3.0 V6	*WHYD2/1/1D*	E	2960	VG30	M		☞8	01/90 ▸ 07/92	2120042L01	**819864**	82	Y
3.0 V6	*WHYD21A*	E	2960	VG30	A		☞8	01/90 ▸ 07/92	2120042L01	**819864**	82	Y
2.7 TD	*WBLYF, WBLYJFT, WBYD21D WBLYD/21*	D	2663	TD27	M		☞8	08/87 ▸ 07/92	2120096011	**819865**	88	Y
2.7 TD	*WBLYF, WBLYJFT, WBYD21D WBLYD/21*	D	2663	TD27	M		☞1	07/92 ▸ 02/93	2120005D00	**820177**	92	Y
Terrano II (R20) (93>2004)												
2.4 i	*KBFNL/QF/UF/VF, TBFUL/QF/UF/VF*	E	2389	KA24E-1, KA24E-116, KA24E-118	M		☞4,9	03/93 ▸	2120053J00	**820181**	76	N
2.4 i	*KBFNL/QF/UF/VF, TBFUL/QF/UF/VF*	E	2389	KA24E-1	M		☞8	03/93 ▸ 05/96	2120040F00	**819846**	88	Y
2.4 i	*KBFNL/QF/UF/VF, TBFUL/QF/UF/VF*	E	2389	KA24E-116, KA24E-1, KA24E-118	M		☞4,9	03/93 ▸	2120060J00	**820176**	82	N
2.7 TD	*JVPNL/QF, KVPNL/QF/UF/VF TVPUL/QF/UF/VF*	D	2663	TD27T	M		☞1	03/93 ▸ 01/98	2120005D00	**820177**	92	Y
2.7 TD	*TVPULQF, KVPNLQF, KVPNLUF TVPULUF, KVPNLVF TVPULVF*	D	2663	TD27T	M			03/93 ▸ 04/94	21200G2401	**820178**	88	Y
2.7 TDi		D	2664	TD27TI	A			07/98 ▸ 02/04	2120005D12	**820178**	88	Y
2.7 TDi		D	2664	TD27TI	M			05/96 ▸ 02/04	2120005D12	**820178**	88	Y
3.0 Di		D	2953	ZD30	A			02/02 ▸ 02/04	212002W202	**820512**	82	Y
3.0 Di		D	2953	ZD30	M			02/02 ▸ 02/04	212002W202	**820512**	82	Y
Terrano II FL (R20) (2004>2006)												
2.7 Di		D	2664	TD27TI	A			02/04 ▸ 12/06	2120005D12	**820178**	88	Y
2.7 Di		D	2664	TD27TI	M			05/00 ▸	21200G2401	**820178**	88	Y
3.0 Di		D	2953	ZD30TI	A			02/04 ▸ 12/06	212002W202	**820512**	82	Y
3.0 Di		D	2953	ZD30TI	M			02/04 ▸ 12/06	212002W202	**820512**	82	Y
Trade												
2.8 D	*KF1107, KE1111, BF15373, BS15373 BS16373, BF16373, BS25373*	D	2820	A428-II	M			12/86 ▸ 06/94	743000640	**819895**	82	Y
3.0 D	*VD33275, VC12375, VD23275, VC32373 VC22375, VC12373, VD22373, VC22373 VC32375, VD33273*	D	2953	BD30	M			04/93 ▸ 2002	743000640	**819895**	82	Y
X-Trail (2001>2003)												
2.0 i 16V	*TDAAL, TDAAR*	E	1998	QR20DE	M		☞4,9	06/01 ▸ 09/03	212006N210	**820176**	82	N
2.0 i 16V		E	1998	QR20DE	A		☞4,9	06/01 ▸ 09/03	212006N210	**820176**	82	N
2.2 Di		D	2184	YD22ETI-114	M			06/01 ▸ 09/03	21200AD201	●**820553**	82	Y
X-Trail (2004>2007)												
2.0 16V		E	1998	QR20DE	M		☞4,9	09/03 ▸ 03/07	212006N210	**820176**	82	N

• **New** Nouveau **Nuevo** Novo **Nuovo** Nieuw **Neu** Yeni Новый Nou

Type Ctr.		cc		AC			OE	Valeo	(°)C	
NISSAN (.../...)										
X-Trail (2004>2007) (.../...)										
2.5 i 16V	E	2488	QR25DE	M		☞4,9	09/03 ▸ 03/07	212006N210	**820176**	82	N
2.5 i 16V	E	2488	QR25DE	A		☞4,9	09/03 ▸ 03/07	212006N210	**820176**	82	N
2.2 dCi 16V	D	2184	YD22DDTI	M			09/03 ▸ 03/07	21200AD201	●**820553**	82	Y
X-Trail (2007>)										
2.5 16V	E	2488	QR25DE	M		☞4,9	03/07 ▸	212006N210	**820176**	82	N
2.5 16V	E	2488	QR25DE	M		☞4,9	03/07 ▸	212006N210	**820176**	82	N
NISSAN										
Cabstar (78>99)										
2.0	E	1952	Z20	M		☞8	07/82 ▸ 05/94	21200V0206	**819846**	88	Y
2.3 D	D	2289	TD23	M		☞8	05/87 ▸ 05/94	2120096011	**819865**	88	Y
2.5 D	D	2488	SD25	M		☞8	07/85 ▸ 10/86	2120096011	**819865**	88	Y
2.5 D	D	2488	SD25	M			07/85 ▸ 10/86	2120058G04	**820942**	92	Y
D21 Pick-up										
2.0 *FLGD21S, KFLGD21, PLGD21H, UFLGD21 FLD21/SR/XR*	E	1952	Z20	M		☞8	09/85 ▸ 05/94	21200V0206	**819846**	88	Y
2.4,2.4 i *KNLMD21, NLD21R, NLG21R NLMD21S, NLYD21S UNLGD21, UNLMD21, KLNGD 21*	E	2389	Z24, Z24E	M		☞8	09/85 ▸ 04/92	21200V0206	**819846**	88	Y
2.4 i *KSLMD21, SLMD21S, USLMD21, KSLGD/21*	E	2389	KA24E	M		☞4,9	04/92 ▸ 02/98	2120053J00	**820181**	76	N
2.4 *KNLGD21, NLD21KR*	E	2389	Z24	A		☞8	09/85 ▸ 04/92	21200V0206	**819846**	88	Y
2.3 D *ALGD21S, UALGD21, KALGD21, ALGD21H ALD21S*	D	2289	SD23	M			09/85 ▸ 10/87	2120005D12	**820178**	88	Y
2.5 D *JLGD21H, JLGD21S, KJLMD21, UJLGD21 UJLMD21, JLMD21S*	D	2488	SD25	M			09/85 ▸ 10/87	2120005D12	**820178**	88	Y
2.5 D *KRLGD21, RLGD, RLG, KRL, RLMD21S RLMD, RLGD21S, URLMD21, KRLMD21*	D	2494	TD25-75,TD25-80,TD25-83	M			10/87 ▸ 02/98	2120005D12	**820178**	88	Y
Interstar (X70)										
1.9 dCi	D	1870	F9Q.7.72	M			09/02 ▸ 09/06	1106100QAB	**820556**	83	N
King Cab (D22)										
2.4 i *D22*	E	2389	KA24E-1, KA24DE	M		☞4,9	02/98 ▸	2120053J00	**820181**	76	N
2.5 TDi *D22*	D	2488	TD25TI	M		☞8	02/98 ▸	2120005D02	**819864**	82	Y
2.5 TDi *D22*	D	2488	TD25TI, YD25DDTI	M			02/98 ▸	2120058G04	**820942**	92	Y
2.5 TD *D22*	D	2494	TD25-83	M		☞8	02/98 ▸	2120005D02	**819864**	82	Y
2.5 TD *D22*	D	2494	TD25-83	M			02/98 ▸	2120058G04	**820942**	92	Y
Kubistar										
1.2 E 16V	E	1149	D4F.712	M			09/03 ▸	1106100QAE	**820138**	89	Y
1.4 E	E	1390	K7J.7.00	M		☞4	09/03 ▸ 01/04	2120000QAA	**820025**	89	Y
1.4 E	E	1390	K7J.7.01	A		☞4	09/03 ▸ 01/04	2120000QAA	**820025**	89	Y
1.6 E 16V	E	1598	K4M.7.52	M		☞4	01/04 ▸	2120000QAA	**820025**	89	Y
1.6 E 16V	E	1598	K4M.7.52	A		☞4	01/04 ▸	2120000QAA	**820025**	89	Y
1.5 dCi	D	1461	K9K.7, K9K.7.02	M		☞4	09/03 ▸ 04/06	1106100QAG	**820537**	89	Y
Pick-up (720)										
1.6 *L720T, L720/, LG720//HT/T/TR, UL720 T*	E	1567	J16	M		☞7,8	09/79 ▸ 08/85	21200H7800	**819966**	82	Y
1.8 *KPLY720, KPL72/0/0T, PL720/T/TR PLGY720, PLY720T, PLG72/0H/0T UPL72/0/0T*	E	1770	L18	M		☞7,8	09/79 ▸ 08/85	21200H7800	**819966**	82	Y
1.8 *KPL720T*	E	1770	L18	M		☞7,8	07/80 ▸ 08/85	21200P7906	**819967**	88	Y
2.2 D *KSLY720, KSL72/0T, SL720//T SLGY720, SLY720T, SLG72/0/0H/0T USLY720, USL72/0/0T*	D	2164	SD22	M		☞8	09/79 ▸ 03/83	2120076204	**819864**	82	Y
2.2 D *SLG720T*	D	2164	SD22	M			09/79 ▸ 12/82	2120005D12	**820178**	88	Y
2.3 D *KAL720T, UAL720T, ALG72/0H/0T*	D	2289	SD23	M		☞8	02/83 ▸ 08/85	2120076204	**819864**	82	Y
2.3 D *KAL720T, ALG720T*	D	2289	SD23	M			02/83 ▸ 08/85	2120005D12	**820178**	88	Y

• **New** Nouveau **Nuevo** Novo **Nuovo** Nieuw **Neu** Yeni Новый Nou

Type Ctr.		cc		AC		2 3	OE	Valeo	(°)C	
NISSAN (.../...)										
Pick-up (720) (.../...)										
2.5 D *JLY720T, KJLY720, UJLY720, JLGY7/20*	D	2488	SD25	M		☞8	04/83 ▸ 08/85	2120076204	**819864**	82	Y
2.5 D *KJLY720*	D	2488	SD25	M			04/83 ▸ 08/85	2120005D12	**820178**	88	Y
Primastar (X83)										
1.9 dCi	D	1870	F9Q.7.60	M			09/02 ▸ 09/06	1106100QAD	**820527**	89	Y
1.9 dCi	D	1870	F9Q.7.60	M			09/02 ▸ 09/06	1106100QAB	**820556**	83	N
2.5 dCi	D	2464	G9U.7.30	M			09/02 ▸ 09/06	1106100QAD	**820527**	89	Y
2.5 dCi	D	2464	G9U.7.30	M			09/02 ▸ 09/06	1106100QAB	**820556**	83	N
Trade										
3.0 D *VC22373, VC32273, VD22373, VD33273 VF15373, VF16373, VF25373, VM25373 VS15373, VS16373, VS25373, VC123 73*	D	2953	BD30-II	M		☞1	06/94 ▸ 12/94	2120005D00	**820177**	92	Y
3.0 D *VC22373, VC32273, VC32373, VD22373 VD23373, VD33273, VD33373, VF15373 VF16373, VF25373, VM25373, VS15373 VS16373, VS25373, VC123/73*	D	2953	BD30-II, BD30-TI	M			01/95 ▸	2120069T06	**819945**	82	Y
Urvan (E24) (87>)										
2.3 D *VYLGE24, VYLE2/4D/4K*	D	2289	TD23	M		☞8	02/87 ▸ 12/88	2120096011	**819865**	88	Y
2.3 D *VYLE24D*	D	2289	TD23	A		☞8	02/87 ▸ 12/88	2120096011	**819865**	88	Y
2.5 D *CJLGE/24, VJLGE24, VJLE2/4D/4K*	D	2494	TD25-80	M		☞8	12/88 ▸	2120096011	**819865**	88	Y
2.5 D *VJLE24D*	D	2494	TD25-80	A		☞8	12/88 ▸ 10/93	2120096011	**819865**	88	Y
2.5 D *VJLGE24*	D	2494	TD25-80	M			12/88 ▸ 05/97	2120005D12	**820178**	88	Y
Vanette (C120 Jap) (81>86)										
1.5 *VHLC120*	E	1487	A15	M		☞7,8	06/81 ▸ 03/82	21200P7906	**819967**	88	Y
1.5 *VHLC120*	E	1487	A15	M		☞7,8	03/82 ▸ 09/86	21200H7800	**819966**	82	Y
2.0 D *VELC120*	D	1952	LD20	M		☞8	11/82 ▸ 09/86	21200W3300	**819864**	82	Y
Vanette (C120 Sp) (86>)										
1.5 *BHLC120, BHLGC12, APLC2/2K, EPLC22K BPLC2/2B/2K*	E	1487	A15, A15S	M		☞7,8	09/86 ▸	21200P7906	**819967**	88	Y
Vanette (C220 Sp) (86>94)										
1.5 *BHLC220, BHLGC22*	E	1487	A15	M		☞7,8	04/87 ▸ 06/94	21200P7906	**819967**	88	Y
Vanette Cargo (C23M) (95>)										
2.0 D *MVEVLDF*	D	1952	LD20	M			07/92 ▸ 07/94	21200Y9701	**820178**	88	Y
2.3 D *MAVFLDF, MVFVLDF*	D	2283	LD23	M			09/94 ▸ 11/01	2120005D10	**820178**	88	Y
1.6 i *MAYVLDF*	E	1597	GA16DEE	M			07/92 ▸	2120086J01	**819945**	82	Y
Vanette (GC22 Jap) (86>93)										
1.5 *APLC2/2K, EPLC22K, BPLC2/2B/2K*	E	1487	A15S	M		☞7,8	09/86 ▸ 03/93	21200V0201	**819966**	82	Y
2.0 *WRLC22B*	E	1952	Z20S	M		☞8	09/86 ▸ 03/93	21200V0206	**819846**	88	Y
2.0 D *AULC2/2K, EULC22K, WULC22B, BULC2 2B/2K*	D	1952	LD20	M		☞8	09/86 ▸ 03/93	21200W3305	**819864**	82	Y
OPEL										
Agila										
1.0 i 12V	E	973	Z10XE	M			03/00 ▸	1338004	**820972**	92	Y
1.0 i Twinport 12V *HF68CG*	E	998	Z10XEP	M			08/03 ▸	1338004	**820972**	92	Y
1.2 i 16V *HL68EG*	E	1199	Z12XE	M			03/00 ▸	1338004	**820972**	92	Y
1.2 i Twinport 16V	E	1229	Z12XEP	M			09/04 ▸	1338004	**820972**	92	Y
1.3 CDTi 16V *HF68FA*	D	1248	Z13DT	M			08/03 ▸	6338022	**820563**	88	Y
Ascona B (75>81)										
1.6,1.6 S ▸ 687305	E	1584	16S-CVH, 16N	M		☞10	08/75 ▸	1338018	**819851**	88	Y
1.6,1.6 S ▸ 687305	E	1584	16S-CVH, 16N	A		☞10	08/75 ▸	1338018	**819851**	88	Y

• **New** Nouveau **Nuevo** Novo **Nuovo** Nieuw **Neu** Yeni Новый Nou

		E	1897	19N	M		☞10	08/75 ▸	1338018	**819851**	88	Y
OPEL (.../...)												
Ascona B (75>81) (.../...)												
1.9 ▸517783		E	1897	19N	M		☞10	08/75 ▸	1338018	**819851**	88	Y
2.0 E		E	1979	20E	M			01/80 ▸ 07/81	1338033	**820148**	87	Y
2.0 ▸602835		E	1979	20S	M		☞10	08/78 ▸	1338018	**819851**	88	Y
2.0 D		D	1998	20D	M			08/78 ▸ 07/81	1338038	**819869**	92	Y
Ascona C (81>88)												
1300,1300 S	*J94/11/68/69, J98/11/68 69, JC9/481/484/486/487 488/489/588/881/884/886 887/889/8A8*	E	1297	13S, 13N	M			08/81 ▸ 08/88	1338052	**819935**	92	Y
1300,1300 S	*J95/11/68/69, JC9/581/584 586/587/589*	E	1297	13N, 13S	A			08/81 ▸ 08/88	1338052	**819935**	92	Y
1600	*JC*	E	1584	16N	M		☞4	08/81 ▸ 08/83	1338063	**819968**	92	Y
1600	*JC*	E	1584	16N	M			08/81 ▸	1338046	**819848**	92	Y
1600,1600 S	*JC4/381/384/386/481/484 486/487/488/4A8/4AR/8A8 JCU467, JCC/438/488, JU4 11/68/69/GT1/GT8/GT9, JU8 11/68/69*	E	1598	16SH	M		☞4	08/81 ▸ 08/88	1338063	**819968**	92	Y
1600,1600 S	*JC4/381/384/386/481/484 486/487/488/4A8/4AR/8A8 JCU467, JCC/438/488, JU4 11/68/69/GT1/GT8/GT9, JU8 11/68/69*	E	1598	16SH	M			08/81 ▸	1338046	**819848**	92	Y
1.6 S,1600,1600 i	*JC*	E	1598	C16NZ, 16SV, E16NZ	M			08/86 ▸ 08/88	1338052	**819935**	92	Y
1600,1600 S	*JCC458, JCU567, JC4/581 584/586/587/588/589/5R8 JU5/11/68/69/GT1/GT8/GT9*	E	1598	16SH	A		☞4	08/81 ▸ 08/88	1338063	**819968**	92	Y
1600,1600 S	*JCC458, JCU567, JC4/581 584/586/587/588/589/5R8 JU5/11/68/69/GT1/GT8/GT9*	E	1598	16SH	A			08/81 ▸	1338046	**819848**	92	Y
1600 i	*JC*	E	1598	E16NZ	A			09/87 ▸ 08/88	1338052	**819935**	92	Y
1800 E,1800 i	*JCC/W38, JCW/381/384/386 4A8/4AC/4C8*	E	1796	18E	M		☞4	08/82 ▸ 08/87	1338049	**820071**	92	Y
1800 E,1800 i	*JCC/W38, JCW/381/384/386 4A8/4AC/4C8*	E	1796	18E	M			08/82 ▸	1338046	**819848**	92	Y
1800 E,1800 i	*JC, JCW3*	E	1796	S18NV, C18NE, E18NV	M			08/85 ▸ 08/88	1338052	**819935**	92	Y
1800 i		E	1796	E18NV	M		☞4	09/87 ▸ 08/88	1338063	**819968**	92	Y
1800 E,1800 i	*JCW/581/587/588/589/5C8 5R8*	E	1796	18E	A		☞4	08/82 ▸ 08/86	1338049	**820071**	92	Y
1800 E,1800 i	*JCW/581/587/588/589/5C8 5R8*	E	1796	18E	A			08/81 ▸	1338046	**819848**	92	Y
2.0 i,2000 i	*JB3/GT1/GT8/GT9, JB56 JCB367, JCK367, JB4/6/68 69, JK3/GT1/GT8/GT9*	E	1998	20SEH, 20NE, C20NE, C20NEF	M		☞4	08/85 ▸ 08/88	1338049	**820071**	92	Y
2.0 i,2000 i	*JB4/6, JCB567, JB5/6/68 69/GT1/GT8/GT9*	E	1998	20SEH, 20NE, C20NEF, C20NE	A		☞4	08/85 ▸ 08/88	1338049	**820071**	92	Y
1600 D	*JCT/484/486/489/4A8/881 884/886/887/889, JT4/11 68/69, JT8/11/68/69*	D	1598	1600D	M			08/81 ▸ 08/88	1338046	**819848**	92	Y
1600 D	*JCT/581/584/586/587/588 589, JT5/11/68/69*	D	1598	1600D	A			08/81 ▸ 08/88	1338046	**819848**	92	Y
Astra F (91>98)												
1.4,1.4 i	*TA4/306/308/319/368/408 419/435/468, TAK436, TAC 408/419/468*	E	1389	14NV, 14SE, C14NZ, C14SE X14NZ	M	+/-		09/91 ▸ 01/98	1338052	**819935**	92	Y
1.4 i 16V	*TAK136, TA1/308/319/368*	E	1389	X14XE	M			07/95 ▸ 02/01	1338073	**820139**	92	Y
1.4 i	*TA6/308/319/368*	E	1389	14SE, C14SE	A			03/91 ▸ 03/96	1338052	**819935**	92	Y
1.4 i 16V		E	1389	X14XE	A			07/95 ▸ 02/01	1338073	**820139**	92	Y
1.6 i	*TAN/408/419/468*	E	1598	C16SE, C16NZ, X16SZR, X16SZ	M	+/-		09/91 ▸ 01/98	1338052	**819935**	92	Y
1.6 i ▸V2000000		E	1598	16LZ2	M	-		1997 ▸ 01/98	1338060	**820185**	92	Y

• **New** Nouveau **Nuevo** Novo **Nuovo** Nieuw **Neu** Yeni Новый Nou

			CC		AC			OE	Valeo	(°)C		
OPEL (.../...)												
Astra F (91>98) (.../...)												
1.6 i		E	1598	C16NZ	M			09/91 ▸ 02/01	1338069	**820500**	82	N
1.6 i 16V	*TAM/301/306/308/319/368*	E	1598	X16XEL	M			06/94 ▸ 02/01	1338073	**820139**	92	Y
1.6 i		E	1598	C16NZ	A			09/91 ▸ 02/01	1338069	**820500**	82	N
1.6 i	*TAN/608/619/668*	E	1598	X16SZR, X16SZ, C16NZ, C16SE	A			09/91 ▸ 01/98	1338052	**819935**	92	Y
1.6 i 16V	*TAM/608/619/668*	E	1598	X16XEL	A			06/94 ▸ 01/98	1338073	**820139**	92	Y
1.6 i V2000000 ▸		E	1598	16LZ2	M	+		09/91 ▸ 01/98	1338094	**820501**	92	Y
1.8 i		E	1796	C18NZ	M			09/91 ▸ 01/98	1338060	**820185**	92	Y
1.8 i		E	1796	C18NZ	A			09/91 ▸ 01/98	1338060	**820185**	92	Y
1.8 i 16V 114058052 ▸	*TAKU46*	E	1799	X18XE, C18XEL, C18XE	M			▸ 01/98	1338079	**820141**	92	Y
1.8 i 16V 14058052 ▸		E	1799	X18XE	A	+/-		▸ 01/98	1338079	**820141**	92	Y
1.8 i 16V ▸ 14058051		E	1799	X18XE	A	+/-		07/95 ▸	1338068	**820140**	92	Y
1.8 i 16V ▸ 14058051		E	1799	C18XE,C18XEL,X18XE	M	+/-		07/93 ▸	1338068	**820140**	92	Y
2.0 i	*TAD3G0, TAKD46*	E	1998	C20NE	M	+/-		09/91 ▸ 02/01	1338060	**820185**	92	Y
2.0 i 16V	*TAW/300/401/406*	E	1998	X20XEV	M	+/-		07/94 ▸ 01/98	1338079	**820141**	92	Y
2.0 i 16V	*TAJ/3G0/3G1/3G6*	E	1998	C20XE	M	+	☞4	07/94 ▸ 01/98	1338063	**819968**	92	Y
2.0 i 16V	*TAJ/3G0/3G1/3G6*	E	1998	C20XE	M	-	☞4	07/94 ▸ 01/98	1338070	**820050**	82	Y
2.0 i		E	1998	C20NE	A	+		09/91 ▸ 02/01	1338069	**820500**	82	N
2.0 i		E	1998	C20NE	A			09/91 ▸ 02/01	1338060	**820185**	92	Y
2.0 i 16V	*TAW/600/601/606*	E	1998	X20XEV	A			07/94 ▸ 01/98	1338079	**820141**	92	Y
2.0 i ▸ S6999999	*TAD3G0, TAKD46*	E	1998	C20NE	M	+ -		09/91 ▸ 01/98	1338069	**820500**	82	N
2.0 i		E	1998	C20NE	A			09/91 ▸ 02/01	1338094	**820501**	92	Y
2.0 i		E	1998	C20NE	M			09/91 ▸ 02/01	1338094	**820501**	92	Y
1.7 TD Turbo 731419 ▸	*TA9/419/468/4E0/4E1/4E6*	D	1686	17TD	M	+/-	☞4,8	▸ 01/98	1338075	**820152**	85	Y
1.7 TD Turbo	*TA9/419/468/4E0/4E1/4E6*	D	1686	17TD	M			09/91 ▸	1338056	**820072**	88	Y
1.7 D,1.7 TD 1.7 TD Ecoturbo	*TAA/408/419/468, TAF/408 419/435/468*	D	1699	17D, X17DTL, 17DR	M	+/-		09/91 ▸ 01/98	1338046	**819848**	92	Y
1.7 D,1.7 TD 1.7 TD Ecoturbo	*TAA/408/419/468, TAF/408 419/435/468*	D	1699	17DR, 17D, X17DTL	M	+/-		09/91 ▸ 01/98	1338024	**819867**	80	Y
Astra G (98>)												
1.2 i 16V		E	1199	X12XE, Z12XE	M			02/98 ▸	6338028	**820151**	92	N
1.4 i 16V		E	1389	X14XE	M		☞8	02/98 ▸	1338331	**820504**	92	Y
1.4 i		E	1389	X14NZ	M			09/98 ▸ 12/02	1338052	**819935**	92	Y
1.4 i 16V		E	1389	X14XE	A		☞8	02/98 ▸	1338331	**820504**	92	Y
1.4 i 16V		E	1389	Z14XE	A			02/98 ▸ 02/04	1338003	**820593**	92	N
1.4 i 16V		E	1389	Z14XE	M			02/98 ▸ 02/04	1338003	**820593**	92	N
1.6 i		E	1598	Z16SE/E4, X16SZR, Z16SE/E2	M			02/98 ▸	1338052	**819935**	92	Y
1.6 i,1.6 i 16V		E	1598	X16XEL, C16SEL	M		☞8	02/98 ▸	1338331	**820504**	92	Y
1.6 i 16V		E	1598	X16XEL	M			09/98 ▸	1338073	**820139**	92	Y
1.6 i,1.6 i 16V		E	1598	X16XEL, C16SEL	A		☞8	02/98 ▸	1338331	**820504**	92	Y
1.6 i		E	1598	X16SZR, Z16SE/E4	A			02/98 ▸	1338052	**819935**	92	Y
1.6 i 16V		E	1598	Z16XE	A			02/98 ▸ 02/04	1338003	**820593**	92	N
1.6 i 16V		E	1598	Z16XE	M			02/98 ▸ 12/05	1338003	**820593**	92	N
1.6 i GNV		F	1598	Z16YNG	M			03/03 ▸ 02/04	1338003	**820593**	92	N
1.8 i 16V 32000001 ▸ 22999999	*0BP07K*	E	1796	Z18XE, X18XE1, Z18XEL	M			02/98 ▸	6338017	**820502**	92	Y
1.8 i 16V 32000001 ▸ 22999999		E	1796	Z18XE, X18XE1	A			02/98 ▸	6338017	**820502**	92	Y
2.0 i 16V,2.0 i Turbo 16V	*0BP07M*	E	1998	X20XEV, Z20LET, X20XER	M			02/98 ▸	1338079	**820141**	92	Y
2.0 i 16V		E	1998	X20XEV	A			02/98 ▸ 12/99	1338079	**820141**	92	Y
1.7 CDTI	*TU35JF*	D	1686	Z17DTL	M			04/03 ▸ 02/04	1338046	**819848**	92	Y
1.7 TD,1.7 TD Ecoturbo		D	1699	X17DTL	M			02/98 ▸	1338046	**819848**	92	Y
Astra G (98>2005)												
2.0 DTi 16V,2.0 Di 16V 320000001 ▸		D	1995	X20DTL, Y20DTH	M			01/03 ▸ 02/05	1338017	**820590**	92	Y

• **New** Nouveau **Nuevo** Novo **Nuovo** Nieuw **Neu** Yeni Новый Nou

Type Ctr.		cc		AC			OE	Valeo	(°)C	
OPEL (.../...)										
Astra G (98>2005) (.../...)										
2.0 DTi 16V,2.0 Di 16V ▸ 320000001	D	1995	Y20DTH, X20DTL	A			01/03 ▸ 02/05	1338017	**820590**	92	Y
Astra G (98>)										
2.0 DTi 16V,2.0 Di 16V ▸ 17B49754	D	1995	X20DTL, Y20DTH, Y20DTL	M			02/98 ▸	1338100	**820503**	92	Y
2.0 DTi 16V,2.0 Di 16V ▸ 17B49754	D	1995	Y20DTH, X20DTL, Y20DTL	A			02/98 ▸	1338100	**820503**	92	Y
2.0 DTi 16V,2.0 Di 16V 17B49755 ▸ 22999999	D	1995	X20DTL, Y20DTH	M				6338004	**820591**	92	Y
2.0 DTi 16V,2.0 Di 16V 17B49755 ▸ 22999999	D	1995	Y20DTH, X20DTL	A				6338004	**820591**	92	Y
2.0 DTi 16V	D	1995	Y20DTH	M			08/99 ▸ 02/04	1338003	**820593**	92	N
2.2 DTI 16V *BF67PG*	D	2171	Y22DTR	M			03/01 ▸	1338017	**820590**	92	Y
Astra H (2004>)										
1.2 i Twinport 16V	E	1229	Z12XEP	M			03/04 ▸	6338028	**820151**	92	N
1.4 i Twinport 16V	E	1364	Z14XEP, Z14XEL	M			03/04 ▸	6338028	**820151**	92	N
1.8 i 16V	E	1796	Z18XE	M			03/04 ▸	6338005	**820502**	92	Y
1.8 i 16V	E	1796	Z18XE	A			03/04 ▸	6338005	**820502**	92	Y
2.0 i Turbo 16V	E	1998	Z20LEL, Z20LER, Z20LEH	M			03/04 ▸	1338079	**820141**	92	Y
1.9 CDTI,1.9 CDTI 16V	D	1910	Z19DTJ, Z19DTH, Z19DTL, Z19DT	M			07/04 ▸	1338275	**820965**	88	Y
1.9 CDTI,1.9 CDTI 16V	D	1910	Z19DT, Z19DTJ	A			09/05 ▸	1338275	**820965**	88	Y
Calibra										
2.0 i *JM0/7DA/7DC*	E	1998	C20NE	M	+/-	☞4	09/89 ▸	1338049	**820071**	92	Y
2.0 i 16V,2.0 i Turbo 16S *JM0/71A/71C/72L*	E	1998	C20XE, C20LET	M	+/-	☞4	09/89 ▸	1338070	**820050**	82	Y
2.0 i *JM0/7DA/7DC*	E	1998	C20NE	M	+	☞4	09/89 ▸	1338062	**820070**	82	Y
2.0 i 16V,2.0 i Turbo 16S *JM0/71A/71C/72L*	E	1998	C20XE, C20LET	M	+	☞4	09/89 ▸	1338063	**819968**	92	Y
2.0 i 16V *JM0/7*/7IC*	E	1998	X20XEV	M			06/94 ▸	1338079	**820141**	92	Y
2.0 i *JM07DB*	E	1998	C20NE	A	+/-	☞4	09/89 ▸	1338049	**820071**	92	Y
2.0 i *JM07DB*	E	1998	C20NE	A	+	☞4	09/89 ▸	1338062	**820070**	82	Y
2.0 i 16V *JM07**	E	1998	X20XEV	A			06/94 ▸	1338079	**820141**	92	Y
2.5 i V6 24V *JM07**	E	2498	C25XE, X25XE-170	M	+/-		05/93 ▸	1338084	**820149**	92	Y
2.5 i V6 24V *JM07**	E	2498	C25XE, X25XE-170	A	+/-		05/93 ▸	1338084	**820149**	92	Y
Corsa A (82>93)										
1.0 *S24/08, S28/08/68, SC2/491/492/493 494/4B9/891/892/893/894/8B9, SC4 249/24B/289/28B, SC5/249/289*	E	993	10S	M			10/82 ▸ 1993	1338052	**819935**	92	Y
1.2,1.2 i *S7408, S64/GV/GV0/GV6/NC NC0/NC6*	E	1195	C12NZ, E12GV, 12NC	M			01/85 ▸ 1993	1338052	**819935**	92	Y
1.2 *S64/08/19/68/NV0/NV1/NV6, S68/08/68 SC4/649/64B/689/68B, SC5/649/689 SM808, SC6/491/492/493/494/4B9/893 8A9/8AB*	E	1196	12ST, 12NV, 12S	M			10/82 ▸ 1993	1338052	**819935**	92	Y
1.3,1.3 i *SA4/08/19/68/GT8, SC5A49 SC4/A49/A4B, SCA/491/492 493/494/4B9/4R9*	E	1297	13SB, 13NB, C13N	M			10/82 ▸ 09/90	1338052	**819935**	92	Y
1.4,1.4 i *S4308, S34/08/11/19/68 GT8/SP0, SC4/08/19/68*	E	1389	C14NZ, 14NV, C14SE	M			09/89 ▸ 1993	1338052	**819935**	92	Y
1.6 i *S, SP308*	E	1598	C16SEI, E16SE, C16SE, C16NZ	M			03/88 ▸ 03/93	1338052	**819935**	92	Y
1.5 D *SF4/08/19/68*	D	1488	4EC1	M		☞8	09/87 ▸ 1993	1338055	**819846**	88	Y
1.5 TD *SB4/08/19/68, SG4/08/19 68*	D	1488	T4EC1	M			03/88 ▸ 1993	1338056	**820072**	88	Y
Corsa B (93>2000)										
1.0 i 12V *S93/CN1/DN1*	E	973	X10XE	M			03/97 ▸ 08/00	6338028	**820151**	92	N
1.2,1.2 i *S93/CB1/DB1*	E	1195	12NZ, C12NZ, X12SZ	M			03/93 ▸ 08/00	1338052	**819935**	92	Y
1.2 i 16V	E	1199	X12XE	M			03/98 ▸ 08/00	1338052	**819935**	92	Y
1.2 i 16V	E	1199	X12XE	A			03/98 ▸ 08/00	6338028	**820151**	92	N
1.4 i *S93/CM1/DM1*	E	1389	C14SE, X14SZ, C14NZ	M			03/93 ▸ 08/00	1338052	**819935**	92	Y
1.4 i 16V *S93/CJ1/DJ1*	E	1389	X14XE	M			07/95 ▸ 08/00	1338073	**820139**	92	Y
1.4 i *S93/CM1/DM1*	E	1389	C14NZ, X14SZ	A			09/93 ▸ 08/00	1338052	**819935**	92	Y

• **New** Nouveau **Nuevo** Novo **Nuovo** Nieuw **Neu** Yeni Новый Nou

			CC			AC			OE	Valeo	(°)C	
OPEL (.../...)												
Kadett D (79>84) (.../...)												
1.6 D *T442T8, T462T8, T43/2T8*	D	1598	D16	A			04/82 ▸ 08/84	1338046	**819848**	92	Y
Kadett E (84>91)												
1.2 S *E83/543/544/583/584/58B, E84/543 544/54B/583/584/58B, T54/08/19/35 48, T58/08/19/35/48*	E	1196	12ST, 12S	M			08/84 ▸	1338052	**819935**	92	Y
1.3,1.3 N,1.3 S,1.3 i *E83/943/944/94B/983/984 98B, T9, E84/943/944/94B 94R/983/984/98B, T94/08 19/35/48/GT, TN448, T98 08/19/35/48*	E	1297	C13N, 13S, 13NB, 13N	M			08/84 ▸	1338052	**819935**	92	Y
1.3 N,1.3 S,1.3 i *E83/953/954/95B, E84/953 954/95B, T95/08/19/35/48*	E	1297	13S, 13N, 13NB	A			08/84 ▸	1338052	**819935**	92	Y
1.4 S,1.4 i *T34/08/19/35/48/67, TC4 19/48*	E	1389	14NV, C14NZ	M			09/89 ▸	1338052	**819935**	92	Y
1.6 S,1.6 i *E83/443/444/44B/483/484 48B, TR467, E84/433/443 444/44B/483/484/48B/4CR*	E	1598	16S-OHC, E16NZ	M			08/84 ▸	1338046	**819848**	92	Y
1.6 S,1.6 i *TR4/67, TU4/08/19/35/48 67/GT, TU8/08/19/35/48*	E	1598	E16NZ, 16SV, C16LZ, 16S-OHC C16NZ	M			08/85 ▸	1338052	**819935**	92	Y
1.6 S *E83/453/454/45B/954, E84/453/454 45B*	E	1598	16S-OHC	A			08/84 ▸	1338046	**819848**	92	Y
1.6,1.6 S,1.6 i *TU3/19, TU5/08/19/35/48 GT*	E	1598	C16NZ, E16NZ, 16SV, C16LZ	A			09/86 ▸	1338052	**819935**	92	Y
1.6 *TU3/08/48*	E	1598	16SV	A			01/89 ▸ 1991	1338052	**819935**	92	Y
1.8,1.8 E,1.8 i *E82/W34, TW3/08/19/48/T08 T19/T35/T48*	E	1796	18E, S18NV, 18SE	M		☞4	08/84 ▸ 1991	1338063	**819968**	92	Y
1.8 i *TW3/08/19/48/T08/T19/T35/T48*	E	1796	C18NE, 18SE	M			09/86 ▸	1338046	**819848**	92	Y
1.8 i	E	1796	C18NZ	M		☞4	09/86 ▸ 1991	1338049	**820071**	92	Y
1.8,1.8 i	E	1796	18E, S18NV, 18SE	A		☞4	08/84 ▸ 1991	1338063	**819968**	92	Y
1.8 i	E	1796	18SE, C18NE	A			09/86 ▸	1338046	**819848**	92	Y
2.0 i,2.0 i 16V *TB3/67, TH3/08/48, TK3/08 48*	E	1998	20SEH, 20NE, C20NE, C20XE 20XE	M		☞4	09/86 ▸	1338063	**819968**	92	Y
1.5 D *TG4/08/19/35/48*	D	1488	TC4EC1	M			1988 ▸	1338056	**820072**	88	Y
1.6 D *E83/T43/T44/T83/T84/TT4, E84/T43 T44/T4B/T83/T84/T8B, TT4/08/19/35 48, TT8/08/19/35/48*	D	1598	16D	M			08/84 ▸ 1989	1338046	**819848**	92	Y
1.6 D *E83/T53/T54, E84/T53/T54/T5B, TT5 08/19/35/48*	D	1598	16D	A			08/84 ▸ 1989	1338046	**819848**	92	Y
1.7 D *TF*	D	1699	17DV	M			01/89 ▸ 1991	1338046	**819848**	92	Y
1.7 D *TF4/08/19/35*	D	1699	17DV	M			01/89 ▸	1338046	**819848**	92	Y
Manta B (75>88)												
1600 N,1600 S ▸ 622327	E	1584	16N, 16S-CVH	M		☞10	08/75 ▸	1338018	**819851**	88	Y
1800 S *MV5/53/58*	E	1796	18S	A			08/84 ▸ 07/86	1338046	**819848**	92	Y
1800 S *582/V44, 532/V44, MV4/53 58, MV8/53/58*	E	1796	18S	M			03/82 ▸ 07/86	1338046	**819848**	92	Y
1900 N,1900 S	E	1897	19S, 19N	M		☞10	08/75 ▸	1338018	**819851**	88	Y
2000 E *MC5/53/58*	E	1979	20E	A			08/84 ▸ 08/88	1338033	**820148**	87	Y
2000 E *532/C4W, MC4/53/58*	E	1979	20E	M			12/77 ▸ 08/88	1338033	**820148**	87	Y
2.0 S *MB553* ▸ 602835	E	1979	20S	A		☞10	12/77 ▸	1338018	**819851**	88	Y
2.0 S *MB453, MB853* ▸ 602835	E	1979	20S	A		☞10	12/77 ▸	1338018	**819851**	88	Y
Meriva												
1.4 i Twinport 16V	E	1364	Z14XEP	M			09/04 ▸	6338028	**820151**	92	N
1.6 i	E	1598	Z16SE/E4	M			05/03 ▸	1338052	**819935**	92	Y
1.6 i 16V	E	1598	Z16XE	M			05/03 ▸ 07/04	1338003	**820593**	92	N
1.8 i 16V	E	1796	Z18XE	M			05/03 ▸	6338005	**820502**	92	Y
1.3 CDTi,1.3 CDTi 16V	D	1248	Y13DT,Z13DT,Z13DTJ	M			08/03 ▸ 07/10	6338022	**820563**	88	Y

• **New** Nouveau **Nuevo** Novo **Nuovo** Nieuw **Neu** Yeni Новый Nou

			CC		AC				OE	Valeo	(°)C	
OPEL (.../...)												
Monterey (91>98)												
3.1 TD *UBS69G, UBS69D*	D	3059	C4JG	M			09/91 ▸ 03/93	1338074	**820506**	82	Y
Monza												
2.0 i *AVC422*	E	1979	20E	M			12/82 ▸ 07/84	1338033	**820148**	87	Y
2.2 i *AVH/602/622*	E	2197	22E	A			08/84 ▸ 08/86	1338038	**819869**	92	Y
2.2 i *AVH/402/422*	E	2197	22E	M			08/84 ▸ 08/86	1338038	**819869**	92	Y
2.5 i *AVJ622*	E	2490	25E	A			06/81 ▸ 08/86	1338038	**819869**	92	Y
2.5 i *AVJ/402/422*	E	2490	25E	M			06/81 ▸ 08/86	1338038	**819869**	92	Y
2.8	E	2784	28H	M	+		06/78 ▸ 05/81	1338033	**820148**	87	Y
2.8	E	2784	28H	M		☞10	06/78 ▸ 05/81	1338018	**819851**	88	Y
3.0 i	E	2968	C30NE	M			08/85 ▸ 08/86	1338038	**819869**	92	Y
3.0 *AVN622*	E	2968	30E	A			06/81 ▸ 08/86	1338038	**819869**	92	Y
3.0 *AVN/402/422*	E	2968	30E	M			06/81 ▸ 08/86	1338038	**819869**	92	Y
Omega A (86>94)												
1.8,1.8 i *VV4/19/35, VW4/19/35*	E	1796	E18NVR, S18NV, 18SV, 18SEH 18NV	M		☞4	10/86 ▸ 02/94	1348049	**820071**	92	Y
1.8,1.8 i *VV6/19/35, VW6/19/35*	E	1796	E18NVR, S18NV, 18SEH, 18SV	A		☞4	10/86 ▸ 02/94	1348049	**820071**	92	Y
2.0 i *VC4/19/35, VC0/419/435, VD4/19/35*	E	1998	C20NEF, C20NEJ, 20SE, C20NE	M		☞4	10/86 ▸ 02/94	1348049	**820071**	92	Y
2.0 i *VC6/19/35, VC0/619/635, VD6/19/35*	E	1998	C20NEF, C20NEJ, 20SE, C20NE	A		☞4	10/86 ▸ 02/94	1348049	**820071**	92	Y
2.4 i *VM419, VM0635*	E	2410	C24NE	M			10/88 ▸ 07/91	1338038	**819869**	92	Y
2.4 i *VM619, VM0619*	E	2410	C24NE	A			10/88 ▸ 07/91	1338038	**819869**	92	Y
2.6 i *VL0/435, VL0419, VL4/19/35*	E	2594	C26NE	M			08/90 ▸ 02/94	1338038	**819869**	92	Y
2.6 i *VL0/619/635, VL6/19/35*	E	2594	C26NE	A			08/90 ▸ 02/94	1338038	**819869**	92	Y
3.0 i,3000 i,3000 i 24V *VN4S19, JK3/G19, VQL619 VQ4/19/35, VR0/419/435 VR4/19/35*	E	2968	C30SE, 30NE, C30LE, C30NE	M			02/87 ▸ 02/94	1338038	**819869**	92	Y
3.0 i,3000 i,3000 i 24V *VQ619, VN6/S19, VR0/435 619, VSQ619, VR6/19/35*	E	2968	30NE, C30SE, C30LE, C30NE	A			02/87 ▸ 02/94	1338038	**819869**	92	Y
3.0 i 24V	E	2969	C30SEJ	M			09/89 ▸ 02/94	1338038	**819869**	92	Y
3.0 i 24V	E	2969	C30SEJ	A			09/89 ▸ 02/94	1338038	**819869**	92	Y
2.3 D,2.3 TD *VE4/19/35, VE0/419/435 VF0419, VF4/19/35, VG0 419/435, VG4/19/35*	D	2260	23DTR, 23YD, 23YDT	M			10/86 ▸ 02/94	1338038	**819869**	92	Y
2.3 D,2.3 TD *VE0619, VE6/19/35, VF0619 VF6/19/35, VG619, VG0 619/635*	D	2260	23YD, 23YDT, 23DTR	A			10/86 ▸ 02/94	1338038	**819869**	92	Y
Omega B (94>)												
2.0 i *M35, VBP406*	E	1998	X20SE, 20SE	M		☞4	02/94 ▸	1338049	**820071**	92	Y
2.0 i 16V *M35, F35/, VBW/406/469*	E	1998	X20XEV	M			02/94 ▸	1338079	**820141**	92	Y
2.0 i 16V *M35/, VBW/606/669*	E	1998	X20XEV	A			02/94 ▸ 08/99	1338079	**820141**	92	Y
2.0 i *M35, VBP606*	E	1998	X20SE, 20SE	A		☞4	02/94 ▸	1338049	**820071**	92	Y
2.2 i 16V	E	2198	Z22XE	M			08/99 ▸	1338079	**820141**	92	Y
2.2 i 16V	E	2198	Z22XE	A			08/99 ▸	1338079	**820141**	92	Y
2.5 i V6 24V *M35, VBY406*	E	2498	X25XE-170	M			02/94 ▸	1338084	**820149**	92	Y
2.5 i V6 24V *M35, VBY606*	E	2498	X25XE-170	A			02/94 ▸	1338084	**820149**	92	Y
2.6 i V6 24V	E	2597	Y26SE	M			09/00 ▸	1338084	**820149**	92	Y
2.6 i V6 24V	E	2597	Y26SE	A			09/00 ▸	1338084	**820149**	92	Y
3.0 i V6 24V *M35, VBZ406*	E	2962	X30XE	M			02/94 ▸	1338084	**820149**	92	Y
3.0 i V6 24V *M35/, VBZ/606/6E0*	E	2962	X30XE	A			02/94 ▸	1338084	**820149**	92	Y
3.2 i V6 24V	E	3175	Y32SE	A			09/00 ▸	1338084	**820149**	92	Y
2.0 DTi 16V	D	1995	X20DTH	M			09/97 ▸ 09/00	1338087	**820507**	92	Y
2.5 TD *M35/, VB9/406/469*	D	2497	X25TD, U25TD	M			02/94 ▸	1338091	**820064**	80	Y
2.5 TD *M35/, VB9/406/606/669*	D	2497	X25TD, U25TD	A			02/94 ▸	1338091	**820064**	80	Y
Rekord D (72>77)												
1700	E	1698	17S, 17L, 17N	M		☞10	01/72 ▸ 08/77	1338018	**819851**	88	Y
1900	E	1897	19SH, 19N, 19S	M		☞10	01/72 ▸ 08/77	1338018	**819851**	88	Y
2000	E	1979	20S	M		☞10	09/75 ▸ 08/77	1338018	**819851**	88	Y
2000 D	D	1998	20D	M			08/74 ▸ 08/77	1338038	**819869**	92	Y
2100 D	D	2068	21D	M			08/74 ▸ 08/77	1338038	**819869**	92	Y
C61121082 ▸												

• **New** Nouveau **Nuevo** Novo **Nuovo** Nieuw **Neu** Yeni Новый Nou

Type Ctr.		cc		AC		2 3	OE	Valeo	(°)C	
OPEL (.../...)										
Rekord D (72>77) (.../...)										
2100 D ▸ C61121081	D	2068	21D	M		09/72 ▸	1338024	**819867**	80	Y
Rekord E (77>86)										
1800 *EV517*	E	1796	18S	A	+	08/84 ▸ 09/86	1338046	**819848**	92	Y
1800 *662V44, 162/V84, EV516, EV816, EV4 16/17/66/67*	E	1796	18S, C18NV, 18N	M	+	10/82 ▸ 09/86	1338046	**819848**	92	Y
1900	E	1897	19N	M	+	08/77 ▸ 09/82	1338033	**820148**	87	Y
2000 E *EC5/17/67*	E	1979	20E	A	+	08/84 ▸ 09/86	1338038	**819869**	92	Y
2000 *EB5/016/017/16/17/66/67*	E	1979	20S	A	+	08/84 ▸ 09/86	1338033	**820148**	87	Y
2.2 i *EH5/016/017/067/16/17/67*	E	2197	22E	A	+	08/84 ▸ 09/86	1338038	**819869**	92	Y
2.2 i *EH817, EH4/016/16/17/66/67*	E	2197	22E	M	+	08/84 ▸ 09/86	1338038	**819869**	92	Y
2100 D	D	2068	21D	M	+	08/77 ▸ 07/78	1338038	**819869**	92	Y
2300 D *EF4/67, EF5/16/17*	D	2260	23D	A	+	08/84 ▸ 09/86	1338038	**819869**	92	Y
2300 D,2300 TD *672F4, 172/F4, EE4/16/17 66/67, EF4/16/17/66/67 EF8/16/17*	D	2260	23TD, 23D	M	+	08/78 ▸ 09/86	1338038	**819869**	92	Y
Senator A (78>87)										
2.0 i *AVCA29*	E	1979	20E	M		12/82 ▸ 07/84	1338033	**820148**	87	Y
2.0 i *AVC502*	E	1979	20E	A		12/82 ▸ 07/84	1338033	**820148**	87	Y
2.2 i *AVH/402/429/802/829*	E	2197	22E	M		08/84 ▸ 02/87	1338038	**819869**	92	Y
2.2 i *AVH/602/629*	E	2197	22E	A		08/84 ▸ 02/87	1338038	**819869**	92	Y
2.5 i *AVJ429*	E	2490	25E	M		06/81 ▸ 02/87	1338038	**819869**	92	Y
2.5 i *AVJ629*	E	2490	25E	A		06/81 ▸ 02/87	1338038	**819869**	92	Y
2.8	E	2784	28H	A	+	06/78 ▸ 1981	1338033	**820148**	87	Y
2.8	E	2784	28H	A		☞10	06/78 ▸ 1981	1338018	**819851**	88	Y
2.8	E	2784	28H	M	+	06/78 ▸ 1981	1338033	**820148**	87	Y
2.8	E	2784	28H	M		☞10	06/78 ▸ 1981	1338018	**819851**	88	Y
3.0,3.0 i *AVN/402/429*	E	2968	30E, C30NE	M		06/78 ▸ 02/87	1338038	**819869**	92	Y
3.0 *AVN/529/602/629*	E	2968	30E	A		06/78 ▸ 02/87	1338038	**819869**	92	Y
2.3 TD *AVE429*	D	2260	23TD	M		08/84 ▸ 02/87	1338038	**819869**	92	Y
2.3 TD *AVE629*	D	2260	23TD	A		08/84 ▸ 02/87	1338038	**819869**	92	Y
Senator B (87>93)										
2.5 i *VJ419*	E	2490	25NE	M		02/87 ▸ 08/90	1338038	**819869**	92	Y
2.5 i *VJ6/19, VJA/601/619*	E	2490	25NE	A		02/87 ▸ 08/90	1338038	**819869**	92	Y
2.6 i *VP19L*	E	2594	C26NE	M		08/90 ▸ 06/93	1338038	**819869**	92	Y
2.6 i *VP19LA*	E	2594	C26NE	A		08/90 ▸ 06/93	1338038	**819869**	92	Y
3.0 i,3.0 i 24V *VNA419, VQ419, VSR419 VN4/19*	E	2968	30NE, C30NE, C30SE, C30LE	M		02/87 ▸ 06/93	1338038	**819869**	92	Y
3.0 i,3.0 i 24V *VNA619, VQ619, VN6/19 VSR/061/619*	E	2968	C30LE, C30SE, 30NE, C30NE	A		02/87 ▸ 08/93	1338038	**819869**	92	Y
Signum										
1.8 i 16V *ONK48, ONU48*	E	1796	Z18XE	M		06/03 ▸	6338005	**820502**	92	Y
3.2 i V6 24V *ONP48, ONS48, ONU48, ONK 48*	E	3175	Z32SE	M		06/03 ▸	1338014	**820149**	92	Y
3.2 i V6 24V *ONP48, ONS48, ONU48, ONK 48*	E	3175	Z32SE	A		06/03 ▸	1338014	**820149**	92	Y
1.9 CDTI,1.9 CDTI 16V	D	1910	Z19DTH, Z19DT	M		04/04 ▸	1338154	**820965**	88	Y
2.0 DTi 16V *ONK48, ONU48*	D	1995	Y20DTH	M		06/03 ▸	1338015	**820594**	92	Y
2.2 DTI 16V *ONP48, ONS48, ONU48, ONK 48*	D	2171	Y22DTR	M		06/03 ▸	1338015	**820594**	92	Y
2.2 DTI 16V *ONP48, ONS48, ONU48, ONK 48*	D	2171	Y22DTR	A		06/03 ▸	1338015	**820594**	92	Y
3.0 CDTi V6 24V *ONU48, ONP48, ONS48 ONK48*	D	2958	Y30DT	A		06/03 ▸ 09/05	6338014	●**820553**	82	Y
3.0 CDTi V6 24V *ONS48, ONU48, ONK48 ONP48*	D	2958	Y30DT	A		06/03 ▸ 09/05	6338029	●**820553**	82	Y
3.0 CDTi V6 24V *ONP48, ONK48, ONS48 ONU48*	D	2958	Y30DT	M		06/03 ▸ 09/05	6338029	●**820553**	82	Y

• **New** Nouveau **Nuevo** Novo **Nuovo** Nieuw **Neu** Yeni Новый Nou

Type Ctr.		CC		AC			OE	Valeo	(°)C	
OPEL (.../...)										
Signum (.../...)										
3.0 CDTi V6 24V *ONS48, ONP48, ONU48 ONK48*	D	2958	Y30DT	M			06/03 ▸ 09/05	6338014	●**820553**	82	Y
Signum B (2005>)										
1.8 i 16V	E	1796	Z18XE	M			10/05 ▸	6338005	**820502**	92	Y
1.9 CDTI,1.9 CDTI 16V	D	1910	Z19DTL, Z19DT, Z19DTH	M			10/05 ▸	1338275	**820965**	88	Y
1.9 CDTI 16V	D	1910	Z19DTH	A			10/05 ▸	1338275	**820965**	88	Y
3.0 CDTi V6 24V	D	2958	Z30DT	A			10/05 ▸ 11/08	6338029	●**820553**	82	Y
3.0 CDTi V6 24V	D	2958	Z30DT	M			10/05 ▸ 11/08	6338029	●**820553**	82	Y
Sintra										
2.2 i 16V *U06A*	E	2198	X22XE	M			03/96 ▸ 12/99	1338079	**820141**	92	Y
3.0 i V6 24V *U06/8*	E	2962	X30XE	A			03/96 ▸ 12/99	1338084	**820149**	92	Y
Speedster										
2.0 i Turbo 16V	E	1998	Z20LET	M			03/03 ▸	1338079	**820141**	92	Y
Tigra (94>2003)										
1.4 i 16V *F07*	E	1389	X14XE	M			10/94 ▸	1338073	**820139**	92	Y
1.4 i *F07*	E	1389	C14SE	M			08/97 ▸ 01/01	1338052	**819935**	92	Y
1.4 i 16V *F07*	E	1389	X14XE	A			10/94 ▸	1338073	**820139**	92	Y
1.6 i 16V *F07*	E	1598	X16XE	M			10/94 ▸	1338073	**820139**	92	Y
Tigra TwinTop (2004>)										
1.4 i Twinport 16V	E	1364	Z14XEP	M			07/04 ▸	6338028	**820151**	92	N
1.8 i 16V	E	1796	Z18XE	M			07/04 ▸	6338005	**820502**	92	Y
1.3 CDTi 16V	D	1248	Z13DT	M			07/04 ▸ 07/08	6338022	**820563**	88	Y
Vectra A (88>95)										
1.4 *JV3/419/468*	E	1389	14NV	M	+/-		09/88 ▸ 07/92	1338052	**819935**	92	Y
1.6 S,1.6 i *JVQ/419/468, JVR/419/468 JVU/419/468*	E	1598	16SV, E16NZ, C16NZ, X16SZ	M	+/-		09/88 ▸ 09/95	1338052	**819935**	92	Y
1.6 S,1.6 i	E	1598	C16NZ2, 16LZ2	M		☞4	09/88 ▸ 09/95	1338062	**820070**	82	Y
1.6 S,1.6 i *JVR619, JV/, JVU/619/668*	E	1598	X16SZ, 16SV, C16NZ	A			09/88 ▸ 09/95	1338052	**819935**	92	Y
1.6 i	E	1598	C16NZ2	A		☞4	09/88 ▸ 09/95	1338062	**820070**	82	Y
1.8,1.8 i *JVT/419/468*	E	1796	E18NVR, 18SV, C18NZ	M		☞4	09/88 ▸ 09/95	1338049	**820071**	92	Y
1.8,1.8 i *JVT619*	E	1796	C18NZ, 18SV, E18NVR	A	+/-	☞4	09/88 ▸ 09/95	1338049	**820071**	92	Y
2.0 i,2.0 i 16V *JVG/X21, JVK319, JVT319* 2000 Turbo 16S,2000 i 16V *JVJ//031/319, JXK319 JXJ/031/319*	E	1998	C20XE, 20XE, 20SEH, C20LET	M	+/-	☞4	09/88 ▸ 09/95	1338063	**819968**	92	Y
2.0 i *JVB/041/046/419/468, JVD/041/419 468/E04/E41*	E	1998	C20NEF, C20NE, 20NE	M	+/-	☞4	09/88 ▸ 09/95	1338062	**820070**	82	Y
2.0 i 16V *JV/, JVW/031/036/041/319 368/468*	E	1998	X20XEV	M	+/-		03/90 ▸ 09/95	1338080	**820258**	82	Y
2.0 i,2000 i *JVB/041/046/419/468 JVH319, JVD/041/319/419 468/668/E04/E41, JXK319 JVK/319/368*	E	1998	20NE, C20NE, C20NEF, 20SEH	M	+ +/-	☞4	09/88 ▸ 09/95	1338049	**820071**	92	Y
2.0 i 16V,2000 Turbo 16S 2000 i 16V *JVG/X21, JVT319, JVJ//031 319, JXK319, JXJ/031/319*	E	1998	C20LET, C20XE, 20XE	M	-	☞4	09/88 ▸ 09/95	1338070	**820050**	82	Y
2.0 i 16V *JV/, JVW/031/036/041/319 368/468*	E	1998	X20XEV	M			03/90 ▸ 09/95	1338079	**820141**	92	Y
2.0 i *JVB/061/066/619/668, JVD/061/066 619/668/E06/E61*	E	1998	20SEH, C20NEF, 20NE, C20NE	A	+/-	☞4	09/88 ▸ 09/95	1338049	**820071**	92	Y
2.0 i 16V *JVW/061/066*	E	1998	X20XEV	A	+/-		09/93 ▸ 09/95	1338080	**820258**	82	Y
2.0 i 16V *JVW/061/066*	E	1998	X20XEV	A	+/-		09/93 ▸ 09/95	1338079	**820141**	92	Y
2.0 i *JVB/061/066/619/668, JVD/061/066 619/668/E06/E61*	E	1998	C20NEF, C20NE, 20NE	A	- +/-	☞4	09/88 ▸ 09/95	1338062	**820070**	82	Y
2.5 i V6 24V *JVX/301/306/319*	E	2498	C25XE	M	+/-		05/93 ▸ 09/95	1338084	**820149**	92	Y
2.5 i V6 24V *JVX/601/606*	E	2498	C25XE	A	+/-		05/93 ▸ 09/95	1338084	**820149**	92	Y
1.7 TD *JV9/401/406/419/468* 731419 ▸	D	1686	17TD	M	+/-	☞4,8	▸ 09/95	1338075	**820152**	85	Y
1.7 TD *JV9/401/406/419/468*	D	1686	17TD	M	+/-		07/91 ▸	1338056	**820072**	88	Y

• **New** Nouveau **Nuevo** Novo **Nuovo** Nieuw **Neu** Yeni Новый Nou

Type Ctr.		cc		AC			OE	Valeo	(°)C	
OPEL (.../...)										
Vectra A (88>95) (.../...)										
1.7 D *JV8/419/468, JVF/419/468*	D	1699	17D, 17DR	M	+/-		09/88 ▸ 09/95	1338046	**819848**	92	Y
Vectra B (95>99)										
1.6 i 16V	E	1598	X16XEL	M			10/95 ▸ 01/99	1338073	**820139**	92	Y
1.6 i *F19, F68*	E	1598	X16SZR	M			10/95 ▸ 01/99	1338052	**819935**	92	Y
1.6 i *F19, F68*	E	1598	16LZ2	M		☞4	10/95 ▸ 01/99	1338062	**820070**	82	Y
1.6 i 16V	E	1598	X16XEL	A			10/95 ▸ 01/99	1338073	**820139**	92	Y
1.8 i 16V *F19, F68*	E	1799	X18XE	M			10/95 ▸ 01/99	1338079	**820141**	92	Y
1.8 i 16V	E	1799	X18XE	A			10/96 ▸ 01/99	1338079	**820141**	92	Y
2.0 i 16V	E	1998	X20XEV	M			10/95 ▸ 01/99	1338079	**820141**	92	Y
2.0 i 16V	E	1998	X20XEV	A			10/95 ▸ 01/99	1338079	**820141**	92	Y
2.0 i *F19, F68* W5000001 ▸ V7999999	E	1998	20NEJ	M		☞4	10/95 ▸ 01/99	1338049	**820071**	92	Y
2.0 i *F19, F68* W1000001 ▸ V7999999	E	1998	20NEJ	A		☞4	10/95 ▸ 01/99	1338049	**820071**	92	Y
2.5 i V6 24V *F68* 2.5 i500 V6 24V	E	2498	X25XE-170, X25XE-195	M			10/95 ▸ 01/99	1338084	**820149**	92	Y
2.5 i V6 24V	E	2498	X25XE-170	A			10/95 ▸ 01/99	1338084	**820149**	92	Y
1.7 TD	D	1686	X17DT	M		☞4,8	10/95 ▸ 01/99	1338075	**820152**	85	Y
2.0 Di 16V	D	1995	X20DTL	M			10/96 ▸ 01/99	1338087	**820507**	92	Y
2.0 TDi 16V	D	1995	X20DTH	M			09/97 ▸ 01/99	1338097	**820592**	92	Y
Vectra B (99>2002)										
1.6 i 16V *0JU68I, 0JU19I, 0JU35I*	E	1598	Z16XE	A			02/99 ▸ 06/03	1338003	**820593**	92	N
1.6 i 16V *0JU35I, 0JU68I, 0JK68I 0JU19I*	E	1598	Z16XE	M			02/99 ▸ 06/03	1338003	**820593**	92	N
1.8 i 16V *0JU/19K/68K, 0JX/19K/35K 68K*	E	1796	Z18XE	M			02/99 ▸	1338001	**820502**	92	Y
1.8 i 16V *0JU/19K/35K/68K, 0JX/19K 35K/68K*	E	1796	Z18XE	M			02/99 ▸	1338079	**820141**	92	Y
1.8 i 16V *0JU/19K/35K/68K, 0JX/19K 35K/68K*	E	1796	Z18XE	A			02/99 ▸	1338079	**820141**	92	Y
1.8 i 16V *0JU/19K/68K, 0JX/19K/35K 68K*	E	1796	Z18XE	A			02/99 ▸	1338001	**820502**	92	Y
2.6 i V6 24V *0JU/19T/35T/68T, 0JX/19T 35T/68T*	E	2597	Y26SE	M			09/00 ▸ 06/03	1338084	**820149**	92	Y
2.6 i V6 24V *0JU/19T/35T/68T, 0JX/19T 35T/68T*	E	2597	Y26SE	A			09/00 ▸ 06/03	1338084	**820149**	92	Y
2.0 DTi 16V *0JU/19M/35M/68M, 0JX/19M 35M/68M*	D	1995	Y20DTH	M			02/99 ▸	1338009	**820592**	92	Y
2.2 DTI 16V *0JU/19P/35P/68P, 0JX/19P 35P/68P*	D	2171	Y22DTR	M			09/00 ▸	1338097	**820592**	92	Y
Vectra C (2002>2005)										
1.6 i 16V	E	1598	Z16XE	M			04/04 ▸ 09/05	1338003	**820593**	92	N
1.8 GPL 16V,1.8 i 16V	G	1796	Z18GPL	M			04/02 ▸ 09/05	6338005	**820502**	92	Y
1.8 i 16V *JK35*	E	1796	Z18XE	M			07/03 ▸	6338005	**820502**	92	Y
1.8 i 16V *JV68KE, JW68KE, 0JK69K 0JU69K, 0JV68, JK3/5KE*	E	1796	Z18XE, Z18XEL	M			04/02 ▸	6338005	**820502**	92	Y
3.2 i V6 24V *0JV/35Z/68Z*	E	3175	Z32SE	M			06/02 ▸	1338014	**820149**	92	Y
3.2 i V6 24V *0JV/35Z/68Z*	E	3175	Z32SE	A			06/02 ▸	1338014	**820149**	92	Y
1.9 CDTI,1.9 CDTI 16V	D	1910	Z19DTH, Z19DT	M			04/04 ▸	1338154	**820965**	88	Y
1.9 CDTI 16V	D	1910	Z19DTH	A			04/04 ▸ 09/05	1338154	**820965**	88	Y
2.0 DTi 16V *JK35MV, JV68, 0J, 0JK69M 0JU69M, JK*	D	1995	Y20DTH	M			04/02 ▸	1338015	**820594**	92	Y
2.2 DTI 16V *JS35PP, JU35PP, JV68PP JW68PP, 0JK69P, 0JU69P 0JV68, JK3/5PP*	D	2171	Y22DTR	M			04/02 ▸	1338015	**820594**	92	Y
2.2 DTI 16V *JS35PP, JU35PP, JV68PP JW68PP, 0JK69P, 0JU69P JK3/5PP*	D	2171	Y22DTR	A			04/02 ▸	1338015	**820594**	92	Y
3.0 CDTI V6 24V *JS35XH, JU69XH, JW68XH JU35XH*	D	2958	Y30DT	A			06/03 ▸ 09/05	6338014	●**820553**	82	Y

• **New** Nouveau **Nuevo** Novo **Nuovo** Nieuw **Neu** Yeni Новый Nou

											(°)C	
OPEL (.../...)												
Vectra C (2002>2005) (.../...)												
3.0 CDTI V6 24V *JS35XG, JW68XH, JU35XG JU69XG*	D	2958	Y30DT	M			06/03 ▸ 09/05	6338014	●**820553**	82	Y
Vectra C (2005>)												
1.6 i 16V	E	1598	Z16XE	M			10/05 ▸ 02/09	1338003	**820593**	92	N
1.9 CDTI,1.9 CDTI 16V	D	1910	Z19DTL, Z19DTH, Z19DT	M			10/05 ▸	1338275	**820965**	88	Y
1.9 CDTI 16V	D	1910	Z19DTH	A			10/05 ▸	1338275	**820965**	88	Y
3.0 CDTI V6 24V	D	2958	Z30DT	A			10/05 ▸ 02/09	6338029	●**820553**	82	Y
3.0 CDTI V6 24V	D	2958	Z30DT	M			10/05 ▸ 02/09	6338029	●**820553**	82	Y
Zafira (98>2003)												
1.6 i 16V *WOL0TG*	E	1598	X16XEL	M		☞8	01/99 ▸	1338331	**820504**	92	Y
1.6 i 16V *WOL0TG*	E	1598	X16XEL	A		☞8	01/99 ▸	1338331	**820504**	92	Y
1.6 i 16V *WOL0TG*	E	1598	Z16XE	A			01/99 ▸ 06/03	1338003	**820593**	92	N
1.6 i 16V *WOL0TG*	E	1598	Z16XE	M			01/99 ▸ 06/03	1338003	**820593**	92	N
1.8 i 16V *WOL0TG* 3H000001 ▸ 28999999	E	1796	X18XE1, Z18XE	M			01/99 ▸	6338017	**820502**	92	Y
1.8 i 16V *WOL0TG* 38000001 ▸ 2B999999	E	1796	X18XE1, Z18XE	A			01/99 ▸	6338017	**820502**	92	Y
2.0 i Turbo 16V *WOL0TG*	E	1998	Z20LET	M			09/01 ▸ 06/03	1338079	**820141**	92	Y
2.0 DTi 16V *WOL0TG* 17B49755 ▸	D	1995	Y20DTH	M			▸ 12/02	6338004	**820591**	92	Y
2.0 DTi 16V *WOL0TG*	D	1995	Y20DTH	M			01/03 ▸ 06/03	1338017	**820590**	92	Y
2.0 DT 16V,2.0 DTI 16V *WOL0TG*	D	1995	X20DTL, Y20DTL	A			01/99 ▸	1338100	**820503**	92	Y
2.0 DT 16V,2.0 DTi 16V *WOL0TG* ▸ 17B49754	D	1995	Y20DTH, X20DTL	M			01/99 ▸	1338100	**820503**	92	Y
Zafira (2003>2005)												
1.6 i GNV 16V *QG75IB, QM75IB*	F	1598	Z16YNG	M			07/03 ▸ 06/05	1338003	**820593**	92	N
1.6 i 16V *QG75IX, QM75IX*	E	1598	Z16XE	M			07/03 ▸ 06/05	1338003	**820593**	92	N
1.8 i 16V *QD75KH, QX75KH* 32000001 ▸	E	1796	Z18XE	M			07/03 ▸ 06/05	6338005	**820502**	92	Y
1.8 i 16V *QX75KH* 32000001 ▸	E	1796	Z18XE	A			07/03 ▸ 06/05	6338005	**820502**	92	Y
2.0 i Turbo 16V *QD75MY*	E	1998	Z20LET	M			07/03 ▸	1338079	**820141**	92	Y
2.0 DTI 16V *QG75MR, QM75MR, QX75MR* 32000001 ▸ *QD7/5MR*	D	1995	Y20DTH	M			07/03 ▸ 06/05	1338017	**820590**	92	Y
2.0 DTI 16V *QM75MI, QX75MI, QG7/5MI* 2.0 DTI 16V 16V 32000001 ▸	D	1995	Y20DTH	A			07/03 ▸ 06/05	1338017	**820590**	92	Y
2.0 DTI 16V *QG75MR, QM75MR, QX75MR* ▸ 17B49754 *QD7/5MR*	D	1995	Y20DTH	M			07/03 ▸	1338100	**820503**	92	Y
2.0 DTI 16V *QM75MI, QX75MI, QG7/5MI* 2.0 DTI 16V 16V ▸ 17B49754	D	1995	Y20DTH	A			07/03 ▸	1338100	**820503**	92	Y
2.0 DTI 16V *QG75MR, QM75MR, QX75MR* 17B49755 ▸ 22999999 *QD7/5MR*	D	1995	Y20DTH	M				6338004	**820591**	92	Y
2.0 DTI 16V *QM75MI, QX75MI, QG7/5MI* 2.0 DTI 16V 16V 17B49755 ▸ 22999999	D	1995	Y20DTH	A				6338004	**820591**	92	Y
2.2 DTI 16V 16V *QD7/5PR/5PW, QX7/5PR/5PW*	D	2171	Y22DTR	M			07/03 ▸	1338017	**820590**	92	Y
Zafira II (2005>)												
1.6 i GNV 16V	F	1598	Z16YNG	M			01/06 ▸ 07/10	1338003	**820593**	92	N
2.0 i Turbo 16V	E	1998	Z20LEH, Z20LER	M			07/05 ▸	1338079	**820141**	92	Y
1.9 CDTI,1.9 CDTI 16V	D	1910	Z19DTH, Z19DTL, Z19DT	M			07/05 ▸	1338275	**820965**	88	Y
1.9 CDTI,1.9 CDTI 16V	D	1910	Z19DTH, Z19DT	A			07/05 ▸	1338275	**820965**	88	Y
OPEL												
Arena												
1.9 D *TF1/L, THB/J/L*	D	1870	F8Q.6.00, F8Q.6.06	M			01/98 ▸ 08/01	4402719	**820008**	89	Y

• **New** Nouveau **Nuevo** Novo **Nuovo** Nieuw **Neu** Yeni Новый Nou

Type Ctr.		cc		AC		2 3	OE	Valeo	(°)C	
OPEL (.../...)										
Arena (.../...)										
2.5 D *TF1//G/M, THB//G/M*	D	2445	S8U.7.80, S8U.7.58, S8U.7.82	M			01/98 ▸ 08/01	4400106	**820023**	76	Y
Campo (88>96)										
2.3 *TFR16, TFS16*	E	2254	4ZDI	M		☞7,8	10/88 ▸ 06/96	4304369	**819966**	82	Y
2.2 D *TFS52, TFR52*	D	2238	C23	M			10/88 ▸ 06/96	4294280	**820506**	82	Y
3.1 TD *TFR69, TFS69*	D	3059	C4JG	M			10/88 ▸ 03/93	1338074	**820506**	82	Y
Campo (96>)										
2.5 DTI,2.5 TD *TFR, TFS, TFS54H, TFR54H*	D	2499	4JA-101,4JA1	M			07/96 ▸	1338074	**820506**	82	Y
3.1 TDS *TFS69H, TFR69H*	D	3059	4JG2	M			07/96 ▸ 09/02	1338074	**820506**	82	Y
Combo (85>93)										
1.3,1.3 i *PBV/783/983*	E	1297	C13N, 13S, 13N	M			07/85 ▸ 03/93	1338052	**819935**	92	Y
1.3	E	1297	13S	A			07/85 ▸ 06/90	1338052	**819935**	92	Y
1.4,1.4 i *PBV382*	E	1389	14NV, C14NZ	M			09/89 ▸ 03/93	1338052	**819935**	92	Y
1.6,1.6 i	E	1598	E16NZ, C16LZ	M			08/86 ▸ 03/93	1338073	**820139**	92	Y
1.6	E	1598	C16LZ	A			08/86 ▸ 03/93	1338073	**820139**	92	Y
1.6 D	D	1598	16D	M			07/85 ▸ 06/90	1338056	**820072**	88	Y
1.7 D *PBV438, T3448*	D	1699	17D	M		☞4,8	08/90 ▸ 03/93	1338075	**820152**	85	Y
Combo (93>2001)										
1.2,1.2 i	E	1195	C12NZ, X12SZ, 12NZ	M			03/93 ▸ 09/01	1338052	**819935**	92	Y
1.4 i	E	1389	X14SZ, C14SE, C14NZ	M			03/93 ▸ 09/01	1338052	**819935**	92	Y
1.7 D 334923 ▸	D	1686	X17D	M			▸ 09/01	1338093	**820975**	85	Y
1.7 D	D	1686	X17D	M		☞4,8	07/95 ▸	1338075	**820152**	85	Y
1.7 D 334923 ▸	D	1699	17D	M			▸ 09/01	1338093	**820975**	85	Y
1.7 D	D	1699	17D	M		☞4,8	03/93 ▸	1338075	**820152**	85	Y
Combo (2001>)										
1.4 i Twinport 16V *DF25G0*	E	1364	Z14XEP	M			07/04 ▸	6338028	**820151**	92	N
1.6 i *DC25I1, DF25I1*	E	1598	Z16SE/E4	M			10/01 ▸	1338052	**819935**	92	Y
Combo FL (2004>)										
1.3 CDTI 16V	D	1248	Z13DT,Z13DTJ	M			07/04 ▸	6338022	**820563**	88	Y
1.4 i Twinport 16V *DF25G0*	E	1364	Z14XEP	M			07/04 ▸	1338003	**820593**	92	N
1.6 i GNV	F	1598	Z16YNG	M			04/05 ▸	1338003	**820593**	92	N
Combo Tour (2002>)										
1.4 i Twinport 16V *DF06G0*	E	1364	Z14XEP	M			07/04 ▸	6338028	**820151**	92	N
1.6 i *DF06I1, DG06I1*	E	1598	Z16SE/E4	M			04/02 ▸	1338052	**819935**	92	Y
Combo Tour FL (2004>)										
1.6 i GNV	F	1598	Z16YNG	M			04/05 ▸	1338003	**820593**	92	N
1.3 CDTI 16V *DF06FB*	D	1248	Y13DT,Z13DT,Z13DTJ	M			07/04 ▸	6338022	**820563**	88	Y
Movano										
1.9 Dti *FD, JD* C000140 ▸	D	1870	F9Q.7.70	M			08/00 ▸ 07/02	4402719	**820008**	89	Y
1.9 Dti *FD, JD*	D	1870	F9Q.7.72	M			08/00 ▸ 07/02	4408928	**820527**	89	Y
2.5 D *FD, JD, UD, ED*	D	2499	S8U.7.72	M			10/98 ▸ 10/01	4500823	**820432**	82	Y
2.8 Dti *FD0C, JD0F, UD0C, ED0/C*	D	2800	S9W.7.00,S9W.7.02	M			10/98 ▸ 10/01	4500823	**820432**	82	Y
Vivaro (2001>2006)										
2.0 i 16V *1F0/5MD, 1G0/3MD/5MD*	E	1998	F4R.7.20	M		☞4	05/01 ▸	4408334	**820025**	89	Y
1.9 DI,1.9 DTI *1F05LE, 1G05LD, 1G05LE 1F05LD, 1G03LE, 1G03LD*	D	1870	F9Q.7.60,F9Q.7.62	M			05/01 ▸ 07/06	4404305	**820527**	89	Y
Vivaro (2006>)										
2.0 i 16V	E	1998	F4R-820	M		☞4	07/06 ▸	4408334	**820025**	89	Y
PEUGEOT										
104										
1.0 *104/A01/A21/A41/C01/C07/S01*	E	954	XV3, XV5, XV8	M		☞4	07/72 ▸ 06/87	133837	**819946**	83	Y

• **New** Nouveau **Nuevo** Novo **Nuovo** Nieuw **Neu** Yeni Новый Nou

Valeo

			CC			AC				Valeo	(°)C	
PEUGEOT (.../...)												
104 (.../...)												
1.0	*104A01, 104C01, 104C07, 104S01 104A41, 104A21*	E	954	XV3,XV5,XV8	M			07/72 ▸ 06/87	133735	**819866**	82	Y
1.1	*104/A11/A12/A17/C11/C12/C17/S01/S11*	E	1124	XW3S, XW7, XW3	M		☞4	07/75 ▸ 05/88	133837	**819946**	83	Y
1.1	*104C11, 104S01, 104C12, 104A11 104A17, 104A12, 104C17, 104S11*	E	1124	XW3,XW3S,XW7	M			07/75 ▸ 05/88	133735	**819866**	82	Y
1.2	*104/A21/A27*	E	1219	XZ5	M		☞4	07/79 ▸ 06/84	133837	**819946**	83	Y
1.2	*104A21, 104A27*	E	1219	XZ5	M			07/79 ▸ 06/84	133735	**819866**	82	Y
1.4	*104/A31/A37/C31/C37/C91*	E	1360	XYR, XY6B, XY8	M		☞4	08/78 ▸ 07/85	133837	**819946**	83	Y
1.4	*104A31, 104C31, 104A37, 104C91 104C37*	E	1360	XY6B,XY8,XYR	M			08/78 ▸ 07/85	133735	**819866**	82	Y
106 (91>96)												
1.4 D	*1AK/9B1/9B2/9B9/9Y2, 1CK/9B1/9B2 9Y2, 1SK/9B1/9B2/9B9/9Y2*	D	1360	TUD3	M			06/92 ▸ 03/96	1338C8	**819897**	89	Y
1.5 D	*1AV/JY2/JZ2, 1SV/JY2, 1CV/JY2/JZ2*	D	1527	TUD5	M			07/94 ▸ 03/96	1338C8	**819897**	89	Y
106 (96>2003)												
1.1 i	*1CHFXF, 1SHFXF, 1AH/FXF*	E	1124	TU1JP	M			09/00 ▸	1336Q2	**820430**	89	Y
1.4 i	*1AK/FWF/FXE/FXS/FXT/FXU, 1CK/FWF FWU/FXD/FXE/FXS/FXT/FXU*	E	1360	TU3JP	M			11/98 ▸	1336Q2	**820430**	89	Y
8211 ▸												
1.4 i	*1AKFXL, 1CKFXL*	E	1360	TU3JP	A			05/99 ▸	1336Q2	**820430**	89	Y
8211 ▸												
1.5 D	*1AV/JUF/JXF/JYE/JYF/JZD/JZE/JZF 1CV/JUF/JXF/JYE/JYF/JZD/JZE/JZF 1SV/JXF/JYE/JZD/JZE*	D	1527	TUD5, TUD5B	M			03/96 ▸	1338C8	**819897**	89	Y
204												
1.1	*620.12, 521/.02/.12, 623/.02/.12*	E	1127	XK5	M		☞10	09/75 ▸ 06/77	133720	**819859**	75	Y
1.1	*240/0/1, 241/0/1, 2711, 2791, 259/0 1*	E	1130	XK4	M		☞10	10/70 ▸ 06/77	133720	**819859**	75	Y
1.2 D	*2515*	D	1225	XLD	M		☞10	09/67 ▸ 06/77	133720	**819859**	75	Y
7911181 ▸												
1.4 D	*521.52, 2595, 2795*	D	1357	XLD4	M			03/73 ▸ 06/77	133748	**819895**	82	Y
205												
1.0	*20A/N11/N12, 20C/L11/N11/N12, 741 A01/A07/C01/C07*	E	954	XV8	M		☞4	02/83 ▸ 07/88	133837	**819946**	83	Y
1.1	*20SE12, 20SE11*	E	1118	E1	M			08/87 ▸ 07/88	133753	**819863**	83	Y
1.1	*20A/L11/L12, 20C/L11/L12, 741/A11 A17/B17/C11/C17/S11/S17*	E	1124	XW7	M		☞4	02/83 ▸ 07/88	133837	**819946**	83	Y
1.1	*20AF12*	E	1124	F1	M			07/89 ▸ 06/93	133753	**819863**	83	Y
1.3	*20CG12, 20SG12, 20AG12*	E	1294	G1,G1A	M			08/87 ▸ 06/93	133753	**819863**	83	Y
1.4	*20D/T12, 20S/L11/L12, 741/A37/A41 A47/A57/B57/C37/C47/C57/S41/S47*	E	1360	XY7, XY6B, XY8, XY7CP	M		☞4	02/83 ▸	133837	**819946**	83	Y
1.6,1.6 i	*20A/BD2/C27, 20C/B62/BD2 20D/B62/BA2/BD2, 741/A27 B66/C27/C66*	E	1580	XU5J, XU5CP, XU5M, XU51C XU5JA	M		☞4	02/83 ▸	133837	**819946**	83	Y
1.6,1.6 i	*20A/B14/BD4, 20C/B14/BD4 741/A28/C28*	E	1580	XU5M, XU51C, XU5CP, XU52C	A		☞4	02/83 ▸	133837	**819946**	83	Y
1.6	*20CJ22*	E	1592	J2	M			07/89 ▸ 06/93	133753	**819863**	83	Y
1.9 i	*20C/B62/D62, 20D/DF2/HF2, 741/B86 C86*	E	1905	XU9JA, XU9J1	M		☞4	02/83 ▸	133837	**819946**	83	Y
1.9 i	*20A/DF4, 20C/DF4/DK4, 20D/DF4/DK4*	E	1905	XU9JAZ, XU9JA	A		☞4	06/90 ▸	133837	**819946**	83	Y
1.7 D	*20A/A91/A92, 20C/A91/A92, 20S/A91 A92, 741/A90/A98/C90/C98/S90/S98*	D	1769	XUD7	M			08/83 ▸ 07/90	133820	**819937**	81	Y
1.7 D	*20C/A92, 20S/A91/A92, 741/A90/A98 C90/C98/S90/S98*	D	1769	XUD7	M		☞4	08/83 ▸	133804	**819936**	89	Y
1.7 D,1.7 TD	*20A/A82/A92, 20C/A82/A91 A92, 20S/A82/A91/A92*	D	1769	XUD7, XUD7T	M		☞4	07/90 ▸	133825	**819952**	83	Y
1.7 D	*20A/A92, 20C/A91/A92, 20TA92, 20S A91/A92*	D	1769	XUD7	M		☞4	05/92 ▸	133823	**819950**	83	Y
1.9 D	*20CDJ2, 20SDJ2, 20A/DJ2*	D	1905	XUD9	M		☞4	08/89 ▸ 05/92	133825	**819952**	83	Y

• **New** Nouveau **Nuevo** Novo **Nuovo** Nieuw **Neu** Yeni Новый Nou

Type Ctr.	cc		AC		2 3	OE	Valeo	(°)C	
PEUGEOT (.../...)									
205 (.../...)									
1.9 D *20CDJ2, 20SDJ2, 20A/DJ2*	D	1905	XUD9	M		☞4	05/92 ▸	133823	**819950**	83	Y
206									
1.1 i *2AH/FXF/FYE/FZ2/FZE/FZW, 2EHFXF* 08030 ▸ *2CH/FXF/FYE/FZ2/FZE/FZW, 2SH/FXU FZW*	E	1124	TU1JP	M			09/98 ▸	1336Q1	**820434**	89	Y
1.4 i *2AK/FWR/FX4/FXP, 2CK/FWR/FXP* ▸ 08029	E	1360	TU3JP	A			03/99 ▸	1336Q1	**820434**	89	Y
1.4 i *2AK/6C2/6C8/FWF/FXE/FXW, 2CK/6C2* ▸ 8029 *FWF/FXE/FXW, 2EK/FWA/FWF*	E	1360	TU3JP	M			09/98 ▸	1336Q1	**820434**	89	Y
1.6 i,1.6 i 16V *2AN/FUR/FZP, 2DNFUR* ▸ 08029 *2KNFUR, 2CN/FUR/FZP*	E	1587	TU5JP, TU5JP4	A			03/99 ▸	1336Q1	**820434**	89	Y
1.6 i,1.6 i 16V *2AN/FUF/FUU/FZE/FZW* ▸ 8029 *2DNFUF, 2KNFUF, 2CN/FUF FUU/FZE/FZW*	E	1587	TU5JP, TU5JP4	M			09/98 ▸	1336Q1	**820434**	89	Y
2.0 i 16V *2DRFNF, 2ERFNF, 2CR/FKA FNF/FRE*	E	1997	EW10J4, EW10J4S	M			04/99 ▸	1338A0	**820431**	89	Y
1.6 HDi,1.6 HDi 16V *2H9HYA, 2D9HZA, 2J9HZA 2K9HZA, 2J9HYA, 2K9HYA 2H9HZA*	D	1560	DV6TED4	M			04/04 ▸ 02/09	1336X2	●**820951**	83	Y
1.9 D *2AW/JYF/JZT/JZW, 2CW/JYF/JZT/JZW 2SW/JYU/JZW, 2TW/JYU/JZW*	D	1868	DW8, DW8B	M		☞4	09/98 ▸	133823	**819950**	83	Y
2.0 HDi *2AR/HYE/HYF/HYU, 2ERHYF* ▸ 08575 *2KRHYF, 2SRHYE, 2CR/HYE HYF/HYU/HYX*	D	1997	DW10TD	M		☞4	09/99 ▸	133823	**819950**	83	Y
207									
1.4 e *WAKFVC, WCKFVC*	E	1360	TU3A	M			03/06 ▸	1336Z2	**820977**	103	Y
1.6 HDi 16V *WC9HXC, WA9HXC, WA9HZC WE9HYC, WE9HZC, WA9HYC WC9HYC, WE9HXC, WB9HZC WC9HZC*	D	1560	DV6ATED4,DV6TED4	M			03/06 ▸	1336X2	●**820951**	83	Y
1.6 HDi 16V *WA9HZC, WC9HZC, WC9HYC* ▸ 11045 *WC9HXC, WB9HZC, WA9HYC WE9HYC, WA9HXC*	D	1560	DV6ATED4,DV6TED4	M	+/-		03/06 ▸ 02/07	1336X2	●**820951**	83	Y
304									
1.1 *304/D11/T11*	E	1127	XK5	M		☞10	09/76 ▸ 09/79	133720	**819859**	75	Y
1.3 *304/A01/B01/B02/C01/C02/D91/M01/M02*	E	1288	XL3, XL3S	M		☞10	03/70 ▸ 08/75	133720	**819859**	75	Y
1.3 *304T01* 4181230 ▸	E	1290	XL5	M		☞5,8	1979 ▸ 03/80	133747	**819900**	82	Y
1.3 *304/D01/M01/M02/T01* ▸ 4181229	E	1290	XL5, XL5S	M		☞10	09/70 ▸ 09/79	133720	**819859**	75	Y
1.4 D *304T20, 304D20, 304M20*	D	1357	XL4D	M			09/76 ▸ 09/79	133748	**819895**	82	Y
1.6 D *304T30*	D	1548	XIDL	M			09/79 ▸ 03/80	133754	**820021**	82	Y
305									
1.1 *581/AA1/DA1/EA1/MA1*	E	1127	XK5	M		☞5,8	11/77 ▸ 02/88	133747	**819900**	82	Y
1.3 *581/A01/D01/E01/M01/T01/U10*	E	1290	XL5	M		☞5,8	11/77 ▸ 06/90	133747	**819900**	82	Y
1.5 *581/A11/A12/A21/AC1/D11/E11/E14/M11 U11*	E	1472	XR5, XR5A, XR5S	M		☞5,8	11/77 ▸ 06/90	133747	**819900**	82	Y
1.6 *581/E27/E56/M27/M56/U27*	E	1580	XU5S, XU51C, XU5CP	M		☞4	08/82 ▸ 06/90	133837	**819946**	83	Y
1.6 *581/E54/M54*	E	1580	XU5S	A		☞4	08/82 ▸ 06/90	133837	**819946**	83	Y
1.9,1.9 i *581/E76/E86/M76/M86*	E	1905	XU92C, XU9J1, XU9S	M		☞4	08/82 ▸ 06/90	133837	**819946**	83	Y
1.9,1.9 i *581/E74/E84/M74/M84*	E	1905	XU9J1, XU92C, XU9S	A		☞4	08/82 ▸ 06/90	133837	**819946**	83	Y
1.5 D *581/A30/AB0/D30/D80/T30*	D	1548	X1D	M			11/77 ▸ 07/82	133754	**820021**	82	Y
1.7 D *581/E68/M68/U60/U68*	D	1769	XUD7	M			08/82 ▸ 06/90	133820	**819937**	81	Y
1.7 D *581/E68/M68/U60/U68*	D	1769	XUD7	M		☞4	08/82 ▸ 06/90	133804	**819936**	89	Y
1.9 D *581/E40/E48/M40/M48/U40/U48*	D	1905	XUD9	M		☞4	08/82 ▸ 06/90	133804	**819936**	89	Y
1.9 D *581/E40/E48/M40/M48/U40/U48*	D	1905	XUD9	M			08/82 ▸ 06/90	133820	**819937**	81	Y
306 (93>97)									
1.8 i *7AL/6A2/6A9/FZ2/FZ8/FZ9, 7BL/6A2 6A9/FZ2/FZ8/FZ9, 7CL/FZ2/FZ8/FZ9 7DL/6A2/FZ2/FZ8*	E	1761	XU7JP	M		☞4	10/93 ▸ 02/97	133837	**819946**	83	Y

• **New** Nouveau **Nuevo** Novo **Nuovo** Nieuw **Neu** Yeni Новый Nou

Type Ctr.		CC		AC		2 3	OE	Valeo	(°)C	
PEUGEOT (.../...)										
306 (93>97) (.../...)										
1.8 i *7AL/6A4/FZ4, 7CLFZ4, 7BL/6A4/FZ4 7DL/6A4/FZ4*	E	1761	XU7JP	A		☞4	06/93 ▸ 02/97	133837	**819946**	83	Y
2.0 i,2.0 i 16V *7AR/FT2/FV2/FY2, 7CR/FT2 FV2/FY2*	E	1998	XU10J4, XU10J4R	M		☞4	09/93 ▸ 02/97	133826	**819934**	89	Y
2.0 i 16V *7CRFS2*	E	1998	XU10J4RS	M			03/96 ▸ 02/97	133839	**820471**	83	Y
2.0 i *7AR/6D2/FX2/FX8, 7BR/FX2/FX8, 7CR 6D2/FX2/FX8, 7DR/6D2/FX2*	E	1998	XU10J2C, XU10J2	M		☞4	07/96 ▸ 02/97	133837	**819946**	83	Y
2.0 i *7BRFX4, 7CRFX4, 7DRFX4, 7AR/FX4*	E	1998	XU10J2, XU10J2C	A		☞4	09/93 ▸ 02/97	133837	**819946**	83	Y
1.8 D *7CA9A2, 7SA9A2, 7AA/9A2*	D	1769	XUD7	M		☞4	06/93 ▸ 02/97	133823	**819950**	83	Y
1.9 D,1.9 TD *7AD/8A2/9B2/HY2/JY2/JZ2 7BD/8A2/9B2/HY2/JY2, 7CD 8A2/9B2/HY2/JY2/JZ2, 7SD 9B2/JY2/JZ2*	D	1905	XUD9, XUD9A, XUD9TE	M		☞4	06/93 ▸ 02/97	133823	**819950**	83	Y
306 (97>)										
1.4 i,1.4 i GPL 8211 ▸ *7AK/FWF/FXE/FXT/FXW, 7BK FWF/FXE/FXT/FXW, 7CK/FWF FXE/FXW, 7SKFXE, 7EK/FWF FXE/FXT/FXW*	E	1360	TU3JP	M			05/99 ▸ 03/02	1336Q2	**820430**	89	Y
1.6 i *7BNFTF, 7DNFTF, 7ENFTF, 7AN/FTF*	E	1587	TU5JP	M			09/00 ▸ 09/02	1336Q1	**820434**	89	Y
1.6 i *7BNFTR, 7DNFTR, 7ENFTR, 7AN/FTR*	E	1587	TU5JP	A			09/00 ▸ 09/02	1336Q2	**820430**	89	Y
1.6 i 8211 ▸ 8210 *7AN/FZE/FZW, 7CNFZE, 7DNFZE, 7BN FZB/FZE/FZW, 7EN/FZE/FZW*	E	1587	TU5JP, TU5JP+	M			05/99 ▸ 09/02	1336Q2	**820430**	89	Y
1.8 i 16V *7AL/FYE/FYT/FYW, 7CLFYE 7BL/FYE/FYT/FYW, 7DL/FYE FYT, 7EL/FYE/FYT/FYW*	E	1761	XU7JP4	M			03/97 ▸ 09/02	133839	**820471**	83	Y
1.8 i,1.8 i 16V 1.8 i GPL 16V *7AL/6A2/FYE/FYF/FYT/FYW 7BL/6A2/FYE/FYF/FYT/FYW FZW, 7CL/6A2/FYE/FYF, 7DL 6A2/FYE/FYT, 7EL/6A2/FYE FYF/FYT/FYW*	E	1761	XU7JP4, XU7JP	M		☞4	03/97 ▸ 09/02	133837	**819946**	83	Y
1.8 i *7AL/6A4/FZP, 7CLFZP, 7DLFZP, 7BL 6A4/FZ4/FZP, 7EL/6A4/FZP*	E	1761	XU7JP	A		☞4	03/97 ▸ 09/02	133837	**819946**	83	Y
2.0 i 16V *7BRFVE, 7AR/FVE, 7CR/6E2 FSH/FVE, 7ERFVE, 7DR/6E2 FVE*	E	1998	XU10J4R, XU10J4RS	M			03/97 ▸ 09/02	133839	**820471**	83	Y
2.0 i 16V *7AR/FVP, 7CRFVP, 7BR/FVP FVW, 7DR/FVP/FVW, 7ER/FVP FVW*	E	1998	XU10J4R	A			03/97 ▸ 09/02	133839	**820471**	83	Y
1.8 D *7CA9AT, 7SA9AE, 7AA/9AT*	D	1769	XUD7	M		☞4	03/97 ▸ 02/02	133823	**819950**	83	Y
1.9 D *7AW/JYF/JZT, 7BW/JYF/JZT, 7CW/JYF JZT, 7SWJYF, 7EW/JYF/JZT*	D	1868	DW8B, DW8	M		☞4	11/98 ▸ 03/02	133823	**819950**	83	Y
1.9 TD *7AD/8AD/HYE, 7CDHYE 7EDHYE, 7BD/8AD/HYE*	D	1905	XUD9TE	M			03/97 ▸ 03/02	133839	**820471**	83	Y
1.9 D,1.9 SD,1.9 TD *7AD/8AD/9BD/HVE/HYE/JYE JYT, 7BD/8AD/9BD/HVE/HYE JYE/JYT, 7CD/HVE/HYE/JYE 7ED/9BD/HVE/JYE/JYT, 7SD JYE/JYT*	D	1905	XUD9A, XUD9TE, XUD9BSD	M		☞4	03/97 ▸ 03/02	133823	**819950**	83	Y
2.0 HDi *7AR/HYE/HYF, 7CRHYE, 7BR HYE/HYF, 7HRHYF, 7ER/HYE HYF*	D	1997	DW10TD	M		☞4	03/99 ▸ 03/02	133823	**819950**	83	Y
307(2001>2005)										
1.4 i,1.4 i 16V *3AK/6DY/FUB/FWB, 3CK/FUB FWB, 3EK/FUB/FWB*	E	1360	TU3JP, ET3J4	M			09/01 ▸	1336Q1	**820434**	89	Y
1.6 i,1.6 i 16V *3AN/6A5/FUB, 3CN/6A5/FUB 3EN/FUB/FUC, 3HN/FUB/FUC*	E	1587	TU5JP4	M			03/01 ▸	1336Q1	**820434**	89	Y
1.6 i 16V *3CNFUE, 3ENFUE, 3AN/FUE 3HN/FUE/FUN*	E	1587	TU5JP4	A			03/01 ▸	1336Q1	**820434**	89	Y
2.0 i 16V *3AR/FNB/FNB, 3BR/FKC/FNC 3CR/FNB/FNB, 3ER/FNB/FNC 3HR/FNB/FNC*	E	1997	EW10J4, EW10J4S	M			03/01 ▸	1338A0	**820431**	89	Y

• **New** Nouveau **Nuevo** Novo **Nuovo** Nieuw **Neu** Yeni Новый Nou

Type Ctr.		cc		AC		2 3	OE	Valeo	(°)C	
PEUGEOT (.../...)										
307(2001>2005) (.../...)										
2.0 i 16V *3BRFNF, 3CRFNE, 3AR/FNE 3ER/FNE/FNF, 3HR/FNE/FNF*	E	1997	EW10J4	A		03/01 ▸	1338A0	**820431**	89	Y
1.4 HDi *3A8/HZB, 3C8/HZB/HZM*	D	1399	DV4TD	M	☞4	02/02 ▸	133823	**819950**	83	Y
1.6 HDi,1.6 HDi 16V *3A9HZB, 3H9HZB, 3A9HYB 3C9HZB, 3E9HZB, 3C9HYB 3E9HYB, 3H9HYB, 3A9HXC*	D	1560	DV6ATED4,DV6TED4	M		07/04 ▸ 06/05	1336X2	●**820951**	83	Y
2.0 HDi *3AR/HSB/HYB/HYM, 3CR/HSB HYB/HYM, 3ER/HSB/HYB, 3HR HSB/HYB*	D	1997	DW10TD, DW10ATED	M	☞4	03/01 ▸	133823	**819950**	83	Y
309 (85>89)										
1.1 *10A/E11/E12, 10C/E11/E12/G10*	E	1118	E1	M		09/85 ▸ 06/89	133797	**819889**	89	Y
1.3 *10A/G12/G22, 10C/D22/G12/G27, 10S E11/E12/G11/G12*	E	1294	G1A, G2, G1B, G2S	M		09/85 ▸ 07/89	133797	**819889**	89	Y
1.3 *10AG22, 10AG12, 10CD22, 10CG27*	E	1294	G1A,G2	M		08/86 ▸ 07/89	133753	**819863**	83	Y
1.5 *10AY22*	E	1442	Y2	M		08/86 ▸ 06/89	133797	**819889**	89	Y
309 (89>94)										
1.5 *3AY2A2*	E	1442	Y2	M		08/90 ▸ 07/92	133753	**819863**	83	Y
309 (85>89)										
1.6 *10AJ22*	E	1592	J2	M		08/86 ▸ 06/89	133797	**819889**	89	Y
309 (89>94)										
1.6 *3AJ2A2*	E	1592	J2	M		08/90 ▸ 07/92	133753	**819863**	83	Y
309 (85>89)										
1.7 D *10CA92, 10SA92, 10A/A92*	D	1769	XUD7	M	☞4	08/86 ▸ 06/89	133825	**819952**	83	Y
1.9 D *10A/D92/DJ2, 10SD92, 10C/D92/DJ2*	D	1905	XUD9	M	☞4	08/86 ▸ 07/89	133825	**819952**	83	Y
309 (89>94)										
1.1 *3CB2A2, 3CE1A2, 3SE1A2, 3AE/1A2*	E	1118	E1	M		07/89 ▸ 07/92	133797	**819889**	89	Y
1.3 *3CG1A2, 3SG1A2, 3AG/1A2*	E	1294	G1A	M		08/89 ▸ 07/92	133797	**819889**	89	Y
1.5 *3AY2A2*	E	1442	Y2	M		08/89 ▸ 07/90	133797	**819889**	89	Y
1.6 *3AJ2A2*	E	1592	J2	M		08/89 ▸ 07/90	133797	**819889**	89	Y
1.9 i 16V *3CD/6C2/FW2*	E	1905	XU9J4	M		08/89 ▸ 08/93	133803	**819896**	88	Y
1.7 TD *3AA8B2, 3CA8B2*	D	1769	XUD7T	M	☞4	08/89 ▸ 08/93	133824	**819951**	83	Y
1.7 TD *3AA8B2, 3CA8B2*	D	1769	XUD7T	M	☞4	08/89 ▸ 08/93	133816	**820043**	89	Y
1.7 D *3AA/9A2/9A9, 3SA9A2, 3CA/9A2/9A9*	D	1769	XUD7	M	☞4	08/89 ▸ 05/92	133825	**819952**	83	Y
1.7 D *3CA9A9, 3SA9A2, 3AA/9A2/9A9*	D	1769	XUD7	M	☞4	05/92 ▸ 08/94	133823	**819950**	83	Y
1.9 D *3AD/9A2/JZ2, 3SD9A2, 3CD/9A2/JZ2*	D	1905	XUD9	M	☞4	08/89 ▸ 05/92	133825	**819952**	83	Y
1.9 D *3AD/9A2/JZ2, 3SD9A2, 3CD/9A2/JZ2*	D	1905	XUD9	M	☞4	05/92 ▸ 08/93	133823	**819950**	83	Y
404										
1.5 *U6, U8*	E	1468	XB2, XB5	M	☞10	06/62 ▸ 07/70	133726	**819856**	75	N
1.6,1.6 i *U6A*	E	1618	XC5, KF2	M	☞10	09/62 ▸ 05/70	133726	**819856**	75	N
1.6	E	1618	XC5, XC6-C, XC7	A	☞10	09/60 ▸ 03/75	133726	**819856**	75	N
1.6,1.6 i *U6E, U7, U8A, U10*	E	1618	XC6-C, XC7, XC5, XC, XC6-I	A	☞10	04/60 ▸ 05/79	133726	**819856**	75	N
1.8 *U6S*	E	1796	XMU6S	M	☞10	01/70 ▸ 10/70	133726	**819856**	75	N
1.8 D *U6D*	D	1816	XD85	M	☞6	06/62 ▸ 06/63	133725	**819855**	72	N
1.9 D *U6D, U7D, U8D, U10*	D	1948	XD88	M	☞6	07/63 ▸ 1977	133725	**819855**	72	N
2.0 D *UXD*	D	1984	XDP88	M	☞6	09/72 ▸ 05/79	133725	**819855**	72	N
405 (87>92)										
1.6,1.6 i *15B/8A2/B12/B22/B32/B52 BD2, 15SB22, 15E/B12/B22 B32/B52/BD2*	E	1580	XU51C, XU5M, XU52C, XU5CP	M	☞4	06/87 ▸ 06/92	133837	**819946**	83	Y
1.6,1.6 i *15B/B24/BD4, 15E/B24/BD4*	E	1580	XU52C, XU5M	A	☞4	06/88 ▸ 06/92	133837	**819946**	83	Y
1.9,1.9 i *15B/D22/D27/D52/D62/DD2 DD7/DF2/DK2, 15E/D22/D27 D52/D62/DD2/DD7/DF2/DK2*	E	1905	XU92C, XU9M, XU9J2, XU9J1 XU9JAZ	M	☞4	06/87 ▸ 06/92	133837	**819946**	83	Y
1.9 i 16V *15B/D62/D67/DF2/DF7, 15E D27/D62/DF7*	E	1905	XU9J4	M		06/87 ▸ 06/92	133803	**819896**	88	Y

• **New** Nouveau **Nuevo** Novo **Nuovo** Nieuw **Neu** Yeni Новый Nou

			CC			AC				OE	Valeo	(°)C	
PEUGEOT (.../...)													
405 (87>92) (.../...)													
1.9,1.9 i	*15B/D24/D54/D64/DF4/DK4 15E/D24/D54/D64/DD2/DF4 DK4*	E	1905	XU9J2, XU9JAZ, XU9J1A, XU92C XU9J1, XU9M	A		☞4	06/87 ▸ 06/92	133837	**819946**	83	Y
1.7 D,1.7 TD 70514985 ▸	*15B/A82/A92/AJ2, 15SA92 15E/A82/A92/AJ2*	D	1769	XUD7TE, XUD7	M		☞4	06/87 ▸ 05/92	133825	**819952**	83	Y
1.7 TD	*15EA82*	D	1769	XUD7TE	M		☞6	06/88 ▸ 05/89	133725	**819855**	72	N
1.7 D,1.7 TD 70612268 ▸	*15B/A82/A92/AJ2, 15SA92 15E/A82/AJ2*	D	1769	XUD7TE, XUD7	M		☞4	06/92 ▸ 06/92	133823	**819950**	83	Y
1.9 D	*15B/D92/DJ2, 15SD92, 15E/D92/DJ2*	D	1905	XUD9A	M		☞4	06/87 ▸ 05/92	133825	**819952**	83	Y
1.9 D 70612268 ▸	*15B/D92, 15SD92, 15E/D92/DJ2*	D	1905	XUD9A	M		☞4	06/92 ▸ 06/92	133823	**819950**	83	Y
405 (92>96)													
1.6 i	*4BBFZ2*	E	1580	XU5JP	M		☞4	07/96 ▸ 10/95	133837	**819946**	83	Y
1.6,1.6 i	*4BB/2A4/DY4/FZ4, 4EB/2A4 DY4/FZ4*	E	1580	XU5M, XU52C, XU5JP	A		☞4	07/92 ▸ 10/96	133837	**819946**	83	Y
1.8 i 7196 ▸	*4BL/FZ2, 4EL/6A2/FZ2*	E	1761	XU7JP, XU7JPPR	M		☞4	07/96 ▸ 10/96	133837	**819946**	83	Y
1.8 i	*4BLFZ4, 4ELFZ4*	E	1761	XU7JP	A		☞4	07/92 ▸ 10/96	133837	**819946**	83	Y
1.9,1.9 i	*4ED2H4, 4BD/2H4/5A4/6D4*	E	1905	XU92C, XU9J2	A		☞4	07/92 ▸ 10/96	133837	**819946**	83	Y
2.0 i 7196 ▸	*4ER6D2, 4BR/FX2/FX7*	E	1998	XU10J2, XU10J2C	M		☞4	07/92 ▸ 10/96	133837	**819946**	83	Y
2.0 i,2.0 i Turbo 16S	*4BR/FY2/GZ7*	E	1998	XU10J4, XU10J4TE	M		☞4	07/92 ▸ 10/95	133826	**819934**	89	Y
2.0 i	*4BR/FX4, 4ER/6D4/FX4*	E	1998	XU10J2, XU10J2C	A		☞4	07/92 ▸ 10/96	133837	**819946**	83	Y
1.7 TD	*15BA82*	D	1769	XUD7TE	M		☞4	1994 ▸ 10/95	133823	**819950**	83	Y
1.7 TD	*15BA82*	D	1769	XUD7TE	M			07/93 ▸ 10/95	1336X2	●**820951**	83	Y
1.9 D,1.9 TD	*4BD/8A2/9B2/HY2/JZ2 4SD9B2, 4ED/8A2/9B2/HY2 JY2/JZ2*	D	1905	XUD9A, XUD9TE	M		☞4	07/92 ▸ 10/96	133823	**819950**	83	Y
406 (95>99)													
1.6 i 7196 ▸	*8BB/FZ2/FZD/FZE*	E	1580	XU5JP	M		☞4	07/96 ▸ 03/99	133837	**819946**	83	Y
1.8 i 16V,1.8 i GPL 16V	*8CLFYE, 8BL/FY2/FY8/FYD FYE/FYS/FYT/FYW, 8EL/FYE FYT/FYW, 8FL/FYE/FYT*	E	1761	XU7JP4	M			10/95 ▸ 04/99	133839	**820471**	83	Y
1.8 i	*8BL/6A2/FXE, 8FLFXE, 8EL/6A2/FXE*	E	1761	XU7JP, XU7JB	M		☞4	10/95 ▸ 03/99	133837	**819946**	83	Y
1.8 i 16V	*8ELFYP, 8FLFYP, 8BL/FYP*	E	1761	XU7JP4	A			07/96 ▸ 03/99	133839	**820471**	83	Y
2.0 i 16V	*8CR/FNA/FRE/FRF*	E	1997	EW10J4	M			05/99 ▸	1338A0	**820431**	89	Y
2.0 i 16V	*8CR/FNR/FR6/FRR*	E	1997	EW10J4	A			05/99 ▸	1338A0	**820431**	89	Y
2.0 i 16V	*8BR/6E2/FV2/FVD/FVE/FVW 8CR/FV2/FVE, 8FRFVE, 8ER 6E2/FVE/FVW*	E	1998	XU10J4R	M			10/95 ▸ 04/99	133839	**820471**	83	Y
2.0 i Turbo	*8ERGXE, 8BR/GX2/GXE*	E	1998	XU10J2TE	M		☞4	07/96 ▸ 03/99	133837	**819946**	83	Y
2.0 i 16V	*8BR/6E4/FV4/FVN/FVP, 8CR FV8/FVP/FVT, 8FRFVP, 8ER 6E2/FVP*	E	1998	XU10J4R	A			10/95 ▸ 04/99	133839	**820471**	83	Y
2.2 i 16V	*8C3FZA*	E	2230	EW12J4	M			03/02 ▸	1338A0	**820431**	89	Y
3.0 i V6 24V	*8BX/FZ2/FZE, 8EXFZE, 8CX FX9/FXA/FXF/FZE*	E	2946	ES9J4S, ES9J4	M			10/96 ▸	133873	**820131**	82	N
3.0 i V6 24V	*8BX/FZ4/FZP, 8EXFZP, 8CX FX3/FX6/FXB/FXR/FZ4/FZP*	E	2946	ES9J4S, ES9J4	A			10/96 ▸	133873	**820131**	82	N
1.9 TD	*8BD/8B2/8BD/HVF/HWE/HX2 HXE, 8ED/8BD/HWE/HX2/HXE 8FD/HWE/HXE*	D	1905	XUD9BTF, XUD9TE, XUD9SD XUD9BSD	M		☞4	11/95 ▸ 03/99	133823	**819950**	83	Y
1.9 TD	*8EDHXP, 8FDHXP, 8BD/HXP*	D	1905	XUD9BTF	A		☞4	03/97 ▸ 03/99	133823	**819950**	83	Y
2.0 HDi	*8ERHZE, 8FRHZE, 8BR/HZE*	D	1997	DW10ATED	M		☞4	10/98 ▸ 03/99	133823	**819950**	83	Y
2.2 HDi 16V	*8C4HXF*	D	2179	DW12TED4	M		☞4	01/01 ▸	133823	**819950**	83	Y
406 (99>)													
1.6 i	*8BBFZE*	E	1580	XU5JP	M		☞4	04/99 ▸ 03/04	133837	**819946**	83	Y
1.8 i 16V,1.8 i GPL 16V	*8EGFZF, 8F6FZF, 8B6/FZF*	E	1749	EW7J4	M			10/00 ▸ 04/04	1338A0	**820431**	89	Y
1.8 i 16V	*8B6/FZR, 8F6FZR, 8E6/FZF FZR*	E	1749	EW7J4	A			10/00 ▸ 04/04	1338A0	**820431**	89	Y

• **New** Nouveau **Nuevo** Novo **Nuovo** Nieuw **Neu** Yeni Новый Nou

Type Ctr.		CC		AC		2 3	OE	Valeo	(°)C	
PEUGEOT (.../...)										
406 (99>) (.../...)										
1.8 i 16V,1.8 i GPL 16V	*8BL/FYE/FYF/FYT/FYW 8FLFYE, 8EL/FYE/FYT*	E	1761	XU7JP4	M			04/99 ▸	133839	**820471**	83	Y
1.8 i	*8ELFXE, 8FLFXE, 8BL/6A2/FXE*	E	1761	XU7JP, XU7JB	M		☞4	04/99 ▸ 04/04	133837	**819946**	83	Y
1.8 i 16V	*8BL/FYP, 8FLFYP, 8EL/FYP FYR*	E	1761	XU7JP4	A			04/99 ▸	133839	**820471**	83	Y
2.0 HPi 16V,2.0 i 16V	*8BR/FNA/FRE/LZF, 8ER/FNA FRE/LZF, 8FR/FNA/FRE*	E	1997	EW10J4, EW10D	M			04/99 ▸ 04/04	1338A0	**820431**	89	Y
2.0 16V,2.0 i 16V	*8CRFNR, 8ERFNR, 8FRFNR 8BR/FNR/FRR*	E	1997	EW10J4	A			06/99 ▸ 10/04	1338A0	**820431**	89	Y
2.0 i 16V	*8ERFV2, 8BR/FV2/FVW*	E	1998	XU10J4R	M			04/99 ▸	133839	**820471**	83	Y
2.0 i 16V	*8ERFV4, 8BR/FV4/FVT*	E	1998	XU10J4R	A			04/99 ▸	133839	**820471**	83	Y
2.2 i 16V	*8C3FZA, 8B3/FZE/FZF, 8E3 FZE/FZF*	E	2230	EW12J4	M			05/00 ▸ 10/04	1338A0	**820431**	89	Y
3.0 24V,3.0 i V6 24V	*8CXFXA, 8BX/FXA/FXF/FZE 8EX/FXA/FXF/FZE*	E	2946	ES9J4S, ES9J4	M			04/99 ▸ 10/04	133873	**820131**	82	N
3.0 24V,3.0 i V6 24V	*8CXFXB, 8BX/FXB/FXR/FZP 8EX/FXB/FXR/FZP*	E	2946	ES9J4S, ES9J4	A			04/99 ▸ 10/04	133873	**820131**	82	N
2.0 HDi	*8BR/HSF/HYE/HYF/HZE/HZF 8ER/HSF/HYE/HYF/HZE/HZF 8FR/HSF/HYF/HZF*	D	1997	DW10ATED, DW10TD	M		☞4	04/99 ▸ 04/04	133823	**819950**	83	Y
2.0 HDi	*8BRHZR, 8ERHZR*	D	1997	DW10ATED	A		☞4	01/01 ▸ 04/04	133823	**819950**	83	Y
2.2 HDI 16V	*8C4HXF, 8E4HXF, 8B4/HXF*	D	2179	DW12TED4	M		☞4	10/00 ▸ 10/04	133823	**819950**	83	Y
407												
1.8 i 16V 10820 ▸	*6D6/FYC/FZB, 6E6/FYC/FZB*	E	1749	EW7A, EW7J4	M			04/04 ▸	1338A0	**820431**	89	Y
2.0 i 16V	*6DR/FJC/FNB, 6ER/FJC/FNB*	E	1997	EW10A, EW10J4	M			04/04 ▸	1338A0	**820431**	89	Y
2.0 i 16V	*6DR/FJF/FNE, 6ER/FJF/FNE*	E	1997	EW10A, EW10J4	A			04/04 ▸	1338A0	**820431**	89	Y
2.2 i 16V	*6D3/FYH/FZH, 6J3FYH, 6E3 FYH/FZH*	E	2230	EW12J4	M			04/04 ▸	1338A0	**820431**	89	Y
2.2 i 16V	*6D3/FYF/FZF, 6E3/FYF/FZF*	E	2230	EW12J4	A			04/04 ▸	1338A0	**820431**	89	Y
3.0 i V6 24V	*6JXFVH*	E	2946	ES9A	M			10/05 ▸	133873	**820131**	82	N
3.0 i V6 24V	*6EXFVJ, 6JXFVJ, 6DX/FVJ*	E	2946	ES9A	A			04/04 ▸	133873	**820131**	82	N
1.6 HDi 16V	*6D9HYB, 6E9HYB, 6E9HZC 6D9HZC, 6E9HYC, 6D9HYC*	D	1560	DV6TED4	M	+		04/04 ▸ 07/07	1336X2	●**820951**	83	Y
2.0 HDi 16V 10310 ▸	*6DRHRH, 6ERHRH*	D	1997	DW10BTED4	M			04/04 ▸ 01/05	1336X1	**820976**	84	N
2.0 HDi 16V 10310 ▸	*6DRHRE, 6ERHRE*	D	1997	DW10BTED4	A			04/04 ▸ 01/05	1336X1	**820976**	84	N
504												
1.6	*504/M71/U01/V01*	E	1618	XC7	M		☞10	08/79 ▸ 07/85	133726	**819856**	75	N
1.6	*504/M71/U01/V01*	E	1618	XC7	M		☞5,8	08/79 ▸ 07/85	133749	**819899**	75	Y
1.8,1.8 i	*504/A01/A02/B02/C02/E01 EA1/F01/F81/M01/M51/V51 V57*	E	1796	XM7, KF5, XM	M		☞10	06/68 ▸ 09/93	133726	**819856**	75	N
1.8	*504/E01/EA1/F01/F81/M01/M51/N51/V57*	E	1796	XM7	M		☞5,8	08/70 ▸ 09/93	133749	**819899**	75	Y
1.8	*504/A03/E03/M03/M53*	E	1796	XM7, XM	A		☞10	12/68 ▸ 07/85	133726	**819856**	75	N
1.8	*504/E03/M03/M53*	E	1796	XM7	A		☞5,8	08/70 ▸ 07/85	133749	**819899**	75	Y
2.0,2.0 i	*504/A11/A12/B12/C12/D11 F11/H11/MA1/MY1/R17/V11*	E	1971	XN1, XN2, XNA	M		☞10	09/69 ▸	133726	**819856**	75	N
2.0,2.0 i	*504/A11/A12/B12/C12/D11 F11/H11/MA1/MY1/R17/V11*	E	1971	XN1, XN2, XNA	M		☞5,8	09/69 ▸	133749	**819899**	75	Y
2.0,2.0 i	*504/A13/A14/B14/C14/D13 F13/H13/MA3/MY3*	E	1971	XN1, XN2, XNA	A		☞5,8	09/69 ▸ 07/85	133749	**819899**	75	Y
2.0,2.0 i	*504/A13/A14/B14/C14/D13 F13/H13/MA3/MY3*	E	1971	XN1, XNA, XN2	A		☞10	09/69 ▸ 07/85	133726	**819856**	75	N
2.7 V6,2.7 i V6 Injection	*504/B31/C31/C32*	E	2664	ZM112, ZMJ	M		☞8	09/74 ▸ 07/84	133734	**819839**	83	Y
2.7 V6	*504C33*	E	2664	ZM112	A		☞8	09/74 ▸ 07/77	133734	**819839**	83	Y
1.9 D	*504/E20/F80/K40/M20/U20/V20*	D	1948	XD88	M			08/70 ▸ 07/83	133766	**819877**	78	N
1.9 D	*504/K40/V20*	D	1948	XD88	M			08/83 ▸ 07/85	133740	**819876**	72	N
2.1 D	*504/A20/D20/D80/E20/F20/F80/H20/M20 V60/VZ0*	D	2112	XD90, XD4	M			09/69 ▸ 07/85	133766	**819877**	78	N
2.1 D	*504/D20/E20/F80/M20/V60*	D	2112	XD90, XD4	M			08/83 ▸ 07/85	133740	**819876**	72	N

• **New** Nouveau **Nuevo** Novo **Nuovo** Nieuw **Neu** Yeni Новый Nou

			CC			AC				OE	Valeo	(°)C	
PEUGEOT (.../...)													
504 (.../...)													
2.3 D	*504/A40/D40/F20/F40/H40/M40/V40*	D	2304	XD2	M			08/71 ▸ 07/83		133766	**819877**	78	N
2.3 D	*504/D40/F20/F40/H40/M40/R48/V40/V48*	D	2304	XD2	M			08/83 ▸		133740	**819876**	72	N
2.3 D	*504/A45/F45/M45*	D	2304	XD2	A			07/75 ▸ 07/83		133766	**819877**	78	N
2.5 D	*504V58*	D	2498	XD3	M			08/85 ▸ 09/93		133740	**819876**	72	N
505													
1.6	*551AT1*	E	1618	XC7	M		☞5,8	08/83 ▸ 07/84		133749	**819899**	75	Y
1.8	*551/A01/A71/A77/D01/D71/D77/F01/F71 F77/FC2*	E	1796	XM7, XM7A	M		☞5,8	08/80 ▸		133747	**819900**	82	Y
1.8	*551/A03/A73/F73*	E	1796	XM7A, XM7	A		☞5,8	05/79 ▸		133747	**819900**	82	Y
2.0	*551/A11/A17/D11/D17/DG1/F11/F17/FB1 G11/G17/H11/H17/S11/S17*	E	1971	XN1A, XN1	M		☞5,8	05/79 ▸		133747	**819900**	82	Y
2.0 i	*551AF6*	E	1971	XN6	M		☞5,8	08/83 ▸ 07/85		133749	**819899**	75	Y
2.0	*551/A13/A18/D13/D18/F13/F18*	E	1971	XN1, XN1A	A		☞5,8	05/79 ▸		133747	**819900**	82	Y
2.0 i	*551/AF4/FF4*	E	1971	XN6	A		☞5,8	08/82 ▸ 07/88		133749	**819899**	75	Y
2.0 i	*551/A12/A16/D16/F16/FD1*	E	1995	ZEJK, ZEJ	M		☞8	05/79 ▸		133734	**819839**	83	Y
2.0 i	*551/A14/A19*	E	1995	ZEJ, ZEJK	A		☞8	05/79 ▸ 1989		133734	**819839**	83	Y
2.2 Turbo 2.2 Turbo injection	*551A99, C225, BD71G BF71G, CE328, BA71F*	E	2155	N9TE	A			07/88 ▸ 1990		133753	**819863**	83	Y
2.2 T,2.2 Turbo 2.2 Turbo injection	*551A96, BA716, 551A66*	E	2155	N9T,N9TE	M			08/82 ▸ 1990		133753	**819863**	83	Y
2.2 i	*551/A36/A86/D86/F86, BD815, BF327 BF816, BA8/15/16*	E	2165	ZDJL, ZDJK	M		☞8	08/81 ▸		133734	**819839**	83	Y
2.2 i	*551/A34/A84/A89/D89/F89, BD81E BF81F, CF221, CF327, BA8/1E/2F/2R*	E	2165	ZDJL, ZDJK	A		☞8	08/81 ▸		133734	**819839**	83	Y
2.8 V6	*551/A76, BA9/16/17/19*	E	2849	ZNJK-170, ZNJK-146	M		☞8	08/85 ▸ 1990		133734	**819839**	83	Y
2.8 V6	*551/A79, BA9/1F/1J/1R*	E	2849	ZNJK-170, ZNJK-146	A		☞8	08/86 ▸ 1990		133734	**819839**	83	Y
2.3 TD 1633872 ▸	*551A46*	D	2304	XD2S	M			08/80 ▸ 07/85		133820	**819937**	81	Y
2.3 D	*551/A40/A48*	D	2304	XD2	M			08/79 ▸ 07/81		133740	**819876**	72	N
2.3 D	*551/A40/A48/D40/D48/F40/S40/S48*	D	2304	XD2	M			07/81 ▸ 07/85		133766	**819877**	78	N
2.3 TD 1662005 ▸	*551A44*	D	2304	XD2S	A			08/80 ▸ 07/85		133820	**819937**	81	Y
2.3 D	*551A45*	D	2304	XD2	A			08/79 ▸ 07/81		133740	**819876**	72	N
2.3 D	*551A45*	D	2304	XD2	A			08/81 ▸ 07/84		133766	**819877**	78	N
2.3 TD ▸ 1662004	*551A44*	D	2304	XD2S	A			08/80 ▸		133759	**819878**	80	N
2.3 TD ▸ 1633871	*551A46*	D	2304	XD2S	M			08/80 ▸		133759	**819878**	80	N
2.5 D,2.5 TD	*551/A50/A53/A56/A58/D50 D57/D58/DH8/F50/F58/G58 H58/S50/S58*	D	2498	XD3, XD3TE, XD3T	M			08/79 ▸		133820	**819937**	81	Y
2.5 D,2.5 TD	*551/A54/A55/A57/A59/D53 D55/D59/F55/F57/F59*	D	2498	XD3, XD3T, XD3TE	A			08/81 ▸		133820	**819937**	81	Y
604													
2.0 i	*604A18*	E	1971	XN6	M		☞5,8	07/82 ▸ 1984		133747	**819900**	82	Y
2.7 V6,2.7 i V6	*604/A31/A32/A37*	E	2664	ZMJ, ZM	M		☞8	10/77 ▸ 1985		133734	**819839**	83	Y
2.7 V6,2.7 i V6	*604/A33/A34*	E	2664	ZM, ZMJ	A		☞8	03/76 ▸ 1985		133734	**819839**	83	Y
2.8 i V6	*604A66*	E	2849	ZNJ	M		☞8	09/83 ▸ 12/86		133734	**819839**	83	Y
2.8 i V6	*604A64*	E	2849	ZNJ	A		☞8	1984 ▸ 1985		133734	**819839**	83	Y
2.3 TD	*604A45*	D	2304	XD2S,XD2SC	A			02/79 ▸ 1985		133759	**819878**	80	N
2.3 TD	*604A46, 604A40*	D	2304	XD2S	M			02/79 ▸ 1985		133759	**819878**	80	N
2.5 TD	*604A56*	D	2498	XD3T	M			09/83 ▸ 12/86		133820	**819937**	81	Y
2.5 TD	*604A55*	D	2498	XD3T	A			09/83 ▸ 12/86		133820	**819937**	81	Y
605 (89>94)													
2.0 i,2.0 i Turbo	*6BR/6A4/FZ4/GY4*	E	1998	XU10J2TE, XU10J2	A		☞4	01/93 ▸ 06/94		133837	**819946**	83	Y
3.0 i V6,3.0 i V6 24V	*6BU/FZ2/KZ2*	E	2963	ZPJ, ZPJ4	M		☞1,4	09/93 ▸ 06/94		133818	**819930**	78	Y
3.0 i V6	*6BUFZ4*	E	2963	ZPJ	A		☞1,4	09/93 ▸ 06/94		133818	**819930**	78	Y
3.0 i V6,3.0 i V6 24V	*6BS/6A2/FZ2/KZ2*	E	2975	ZPJ4, ZPJ	M		☞1,4	10/89 ▸ 06/94		133818	**819930**	78	Y
3.0 i V6	*6BS/6A4/FZ4*	E	2975	ZPJ	A		☞1,4	04/90 ▸ 06/94		133818	**819930**	78	Y

• **New** Nouveau **Nuevo** Novo **Nuovo** Nieuw **Neu** Yeni Новый Nou

Type Ctr.	cc		AC		2 3	OE	Valeo	(°)C	
PEUGEOT (.../...)									
605 (89>94) (.../...)									
2.1 D *6BP9A2*	D	2138	XUD11A	M		☞4	09/90 ▸ 12/90	133812	**819929**	85	Y
605 (94>99)									
2.0 i 16V *6BR/6E2/FV2/FV9/FVE*	E	1998	XU10J4R	M			07/94 ▸ 05/99	133839	**820471**	83	Y
2.0 i Turbo *6BR/GX2/GXE*	E	1998	XU10J2CTEL3, XU10J2CTE	M		☞4	07/94 ▸ 05/99	133837	**819946**	83	Y
2.0 i 16V *6BR/6E4/FV4/FVP*	E	1998	XU10J4R	A			07/94 ▸ 05/99	133839	**820471**	83	Y
2.0 i,2.0 i Turbo *6BR/6A4/GX4/GXP*	E	1998	XU10J2CTEL3, XU10J2CTE XU10J2	A		☞4	07/94 ▸ 05/99	133837	**819946**	83	Y
3.0 i V6 24V *6BX/FZ2/FZE*	E	2946	ES9J4	M		☞1,4	06/97 ▸ 05/99	133818	**819930**	78	Y
3.0 i V6 24V *6BX/FZ2/FZE*	E	2946	ES9J4	M			06/97 ▸ 05/99	133873	**820131**	82	N
3.0 i V6 24V *6BX/FZ4/FZP*	E	2946	ES9J4	A		☞1,4	06/97 ▸ 05/99	133818	**819930**	78	Y
3.0 i V6 24V *6BX/FZ4/FZP*	E	2946	ES9J4	A			06/97 ▸ 05/99	133873	**820131**	82	N
3.0 i V6,3.0 i V6 24V *6BU/FZ2/KZ2*	E	2963	ZPJ4, ZPJ	M		☞1,4	07/94 ▸ 06/97	133818	**819930**	78	Y
3.0 i V6 *6BUFZ4*	E	2963	ZPJ	A		☞1,4	07/94 ▸ 06/97	133818	**819930**	78	Y
2.5 TD *6BT/HY2/HYE*	D	2446	DK5ATE	M		☞4	07/94 ▸ 05/99	1336F9	**819954**	85	Y
2.5 TD *6BTHY2, 6BTHYE*	D	2446	DK5ATE	M			07/94 ▸ 05/99	133846	**819956**	84	Y
607 (2000>2004)									
2.0 i 16V *9DR/FN5/FNB/FNC*	E	1997	EW10J4	M			05/00 ▸	1338A0	**820431**	89	Y
2.2 i 16V *9D3/FZB/FZC*	E	2230	EW12J4	M			05/00 ▸	1338A0	**820431**	89	Y
2.2 i 16V *9D3/FZ2/FZ6/FZE*	E	2230	EW12J4	A			05/00 ▸	1338A0	**820431**	89	Y
3.0 i V6 24V *9DX/FX5/FXC*	E	2946	ES9J4S	M			05/00 ▸	133873	**820131**	82	N
3.0 i V6 24V *9DX/FX2/FX6/FXE*	E	2946	ES9J4S	A			05/00 ▸	133873	**820131**	82	N
2.0 HDi *9DR/HSB/HZB*	D	1997	DW10ATED	M		☞4	05/00 ▸	133823	**819950**	83	Y
2.2 HDi 16V *9D4/HXB/HXG*	D	2179	DW12TED4	M		☞4	05/00 ▸	133823	**819950**	83	Y
2.2 HDi 16V *9D4HXE*	D	2179	DW12TED4	A		☞4	09/00 ▸	133823	**819950**	83	Y
607 (2004>)									
2.2 i 16V *9U3/FYH/FZC*	E	2230	EW12J4	M			10/04 ▸	1338A0	**820431**	89	Y
2.2 i 16V *9U3FZF*	E	2230	EW12J4	A			10/04 ▸	1338A0	**820431**	89	Y
3.0 i V6 24V *9UXFVJ*	E	2946	ES9A	A			10/04 ▸	133873	**820131**	82	N
2.0 HDi *9URHSB*	D	1997	DW10ATED	M		☞4	10/04 ▸	133823	**819950**	83	Y
2.2 HDi 16V *9U4HXG*	D	2179	DW12TED4	M		☞4	10/04 ▸	133823	**819950**	83	Y
2.2 HDi 16V *9U4HXE*	D	2179	DW12TED4	A		☞4	10/04 ▸	133823	**819950**	83	Y
806 (94>98)									
1.8 i *221LA2* 7196 ▸	E	1761	XU7JP	M		☞4	07/96 ▸ 09/98	133837	**819946**	83	Y
2.0 i,2.0 i Turbo *221/RA2/RB2/RB9* 7196 ▸	E	1998	XU10J2CTEL3, XU10J2CTE XU10J2C	M		☞4	07/94 ▸ 09/98	133837	**819946**	83	Y
1.9 TD *221/DA2/DC2/DH2*	D	1905	XUD9TE, XUD9TEF, XUD9BTF	M		☞4	08/94 ▸ 09/98	133823	**819950**	83	Y
2.1 TD *221PA2*	D	2088	XUD11BTE	M		☞4	06/96 ▸ 09/98	133823	**819950**	83	Y
806 (98>2002)									
1.8 i *221LA2*	E	1761	XU7JP	M		☞4	10/98 ▸ 05/02	133837	**819946**	83	Y
2.0 i 16V *AFRFNC*	E	1997	EW10J4	M			07/00 ▸ 05/02	1336Q1	**820434**	89	Y
2.0 i 16V *AFRFNF*	E	1997	EW10J4	A			07/00 ▸ 05/02	1336Q1	**820434**	89	Y
2.0 i 16V *AFRFVB*	E	1998	XU10J4R	M			10/98 ▸ 05/02	133839	**820471**	83	Y
2.0 i,2.0 i Turbo CT *221/RA2/RB2*	E	1998	XU10J2C, XU10J2CTEL3	M		☞4	10/98 ▸ 05/02	133837	**819946**	83	Y
2.0 i,2.0 i Turbo CT *221/RA2/RB2*	E	1998	XU10J2C, XU10J2CTEL3	M		☞4	10/98 ▸ 05/02	133838	**819953**	84	Y
1.9 TD *221DH2*	D	1905	XUD9BTF	M		☞4	10/98 ▸ 05/02	133823	**819950**	83	Y
2.0 HDi,2.0 HDi 16V *AFR/HWB/HZA*	D	1997	DW10ATED, DW10ATED4	M		☞4	08/99 ▸ 05/02	133823	**819950**	83	Y
2.1 TD *221PA2*	D	2088	XUD11BTE	M		☞4	10/98 ▸ 05/02	133823	**819950**	83	Y
807									
2.0 i 16V *EAR/FNC, EBR/FJC/FNC*	E	1997	EW10J4, EW10A	M			06/02 ▸	1338A0	**820431**	89	Y
2.0 i 16V *EBR/FJF/FNF*	E	1997	EW10J4, EW10A	A			06/02 ▸	1338A0	**820431**	89	Y
2.2 i 16V *EA3FZC, EB3FZC*	E	2230	EW12J4	M			06/02 ▸ 09/05	1338A0	**820431**	89	Y
3.0 i V6 24V *EAXFWF, EBXFWF*	E	2946	ES9J4S	A			06/02 ▸ 09/05	133873	**820131**	82	N
2.0 HDi 16V *EARHTB, EBRHTB*	D	1997	DW10ATED4	M		☞4	06/02 ▸ 05/06	133823	**819950**	83	Y
2.0 HDi 16V *EAR/HME, EBR/HME/HWB*	D	1997	DW10ATED4	A		☞4	03/03 ▸	133823	**819950**	83	Y
2.2 HDi 16V *EA4/HWB/HWG, EB4/HWB/HWG*	D	2179	DW12TED4	M		☞4	06/02 ▸ 06/06	133823	**819950**	83	Y
1007									
1.4 i *KMKFVB*	E	1360	TU3JP, TU3A	M			04/05 ▸	1336Q2	**820430**	89	Y

• **New** Nouveau **Nuevo** Novo **Nuovo** Nieuw **Neu** Yeni Новый Nou

PEUGEOT (.../...)												
Expert (95>2003) (.../...)												
1.9 D	*BBWJZA, BAW/JZA, BEWJZA, BDW/JYB JZA, BTW/JYB/JZA, BZW/JYB/JZA*	D	1868	DW8, DW8B	M		☞4	05/98 ▸	133823	**819950**	83	Y
1.9 D,1.9 TD	*222/DA2/DB2, 223/DA2/DB2 DH2, 225DA2, 226DA2, 224 DA2/DB2/DH2*	D	1905	XUD9TEF, XUD9A, XUD9BTF	M		☞4	09/95 ▸	133823	**819950**	83	Y
2.0 HDi,2.0 HDi 16V	*BCRHZB, BAR/HWB/HZB BERHZB, BHRHZB, BDR/HXA HXB/HZA/HZB, BTRHWB BURHZB, BWRHZB, BSR/HXA HXB/HZB, BYR/HXA/HXB/HZB BZR/HWB/HXA/HXB*	D	1997	DW10BTED, DW10ATED4, DW10CTED DW10ATED	M		☞4	09/00 ▸	133823	**819950**	83	Y
Expert II (2004>2006)												
2.0 i 16V	*BERFNC, BXRFNC, BZRFNC BBR/FNC*	E	1997	EW10J4	M			01/04 ▸	1336Q1	**820434**	89	Y
2.0 i 16V	*BBRFNF, BERFNF*	E	1997	EW10J4	A			01/04 ▸	1336Q1	**820434**	89	Y
1.9 D	*BVWJYB, BXWJYB, BZWJYB, BTW/JYB*	D	1868	DW8B	M		☞4	01/04 ▸	133823	**819950**	83	Y
2.0 HDi,2.0 HDi 16V	*BBR/HXB/HZB, BER/HXB/HZB BTRHWB, BURHZB, BVRHWB BSR/HXB/HZB, BXRHWB, BWR HXB/HZB, BYR/HXB/HZB, BZR HWB/HXB*	D	1997	DW10BTED+L4, DW10ATED4 DW10BTED	M		☞4	01/04 ▸	133823	**819950**	83	Y
Expert II (2007>)												
2.0 i 16V	*XERFJC*	E	1997	EW10A	M			03/07 ▸	1338A0	**820431**	89	Y
1.6 HDi 16V ▸11166	*XC9HUC, XT9HUC, XU9HUC XS9HUC, XW9HUC, XB9HUC XA9HUC*	D	1560	DV6UTED4	M			01/07 ▸ 06/07	1336X2	●**820951**	83	Y
J5												
1.8 GPL	*280A11*	G	1796	XM7T-G	M		☞5,8	11/81 ▸ 08/90	133749	**819899**	75	Y
1.8 GPL	*280A11*	G	1796	XM7T-G	M		☞5,8	11/81 ▸ 08/90	133747	**819900**	82	Y
2.0	*28G224, 280/B22/G22*	G	1971	XN1T-G	M		☞5,8	11/81 ▸ 08/90	133749	**819899**	75	Y
2.0	*28G224, 280/B22/G22*	G	1971	XN1T-G	M		☞5,8	11/81 ▸ 08/90	133747	**819900**	82	Y
1.8	*280/A11/C11, 290/A11/C11*	E	1796	XM7T, XM7T3	M		☞5,8	11/81 ▸ 02/94	133747	**819900**	82	Y
1.8	*280/A11/C11*	E	1796	XM7T3, XM7T	M		☞5,8	11/81 ▸ 08/90	133749	**819899**	75	Y
2.0	*280/B22/C22/D22/G22/H22/J32/K32*	E	1971	XN1T, XN1TA	M		☞5,8	11/81 ▸ 08/90	133749	**819899**	75	Y
2.0	*280/B22/C22/D22/G22/H22, 290/A42 B22/B42/B44/C22/C42/C44/D42/G22/G42 G44/J32/K32/K42*	E	1971	XN1T, XN1TA	M		☞5,8	11/81 ▸ 02/94	133747	**819900**	82	Y
1.9 D	*280/B62/C82, 290/A62/B62/C02/G62 M62/R62*	D	1905	XUD9A	M		☞4	07/87 ▸ 02/94	133808	**819936**	89	Y
2.5 D,2.5 TD	*280/A51/B52/B92/C51/C52 C92/C94/D52/G52/G92/H52 H92/J52/J92/K92/L92/X54 28B/52D/92D, 2G921D, 290 B52/B54/B92/B94/C52/C54 C92/C94/G52/G54/G92/G94 J52/J92/K52/K92*	D	2500	CRD93LS, CRD93L, CRD93(651) CRD93(661)	M			11/81 ▸ 02/94	133765	**819838**	86	Y
J7												
1.5	*J7B*	E	1468	XB5P	M		☞10	06/65 ▸ 07/70	133726	**819856**	75	N
1.6	*J7PZ10, J7C//P/S/T*	E	1618	XC5P, XC7P	M		☞10	09/65 ▸ 08/79	133726	**819856**	75	N
1.8	*J7E/, J7F//P/S/T, J7P/W20/W25/X20 X23/X24/Y20/Y26/Y27/Y28/Z20/Z21/Z22*	E	1796	XM7P	M		☞10	07/70 ▸ 01/80	133726	**819856**	75	N
1.8 D	*J7AD*	D	1816	XDP85	M		☞6	06/65 ▸ 09/67	133725	**819855**	72	N
2.0 D	*J7GD, J7PZ30, J7B/D/D8/DP/DS/DT*	D	1984	XDP88	M		☞6	09/65 ▸ 07/78	133725	**819855**	72	N
2.1 D	*J7B/D/D8/DP/DS/DT, J7H/D/DP/DS/DT J7P/W40/W45/X40/X43/X44/Y40/Y46 Y47/Y48/Z40/Z41/Z42/Z50*	D	2112	XDP90	M		☞6	09/67 ▸ 01/80	133725	**819855**	72	N
2.3 D	*J7P/W60/W65/X60/X63/X64/Y60/Y66/Y67 Y68/Z60/Z61/Z62*	D	2304	XD2P94	M		☞6	07/77 ▸ 01/80	133725	**819855**	72	N
J9												
1.6	*888A10*	E	1618	XC7P	M		☞10	01/80 ▸ 1991	133726	**819856**	75	N

• **New** Nouveau **Nuevo** Novo **Nuovo** Nieuw **Neu** Yeni Новый Nou

Type Ctr.		CC		AC			OE	Valeo	(°)C	
PEUGEOT (.../...)										
J9 (.../...)										
2.0 *888/A30/A31/A33/A35/A39/B31/C30/C33 C39/D33/D35/D39*	E	1971	XN1P	M		☞10	01/80 ▸ 1991	133726	**819856**	75	N
2.1 D *888A60*	D	2112	XDP90	M		☞6	01/80 ▸ 07/90	133725	**819855**	72	N
2.3 D *888/A70/A71/A73/A75/A79/B71/C70/C73 C76/C79/D73/D75/D79*	D	2304	XD2P	M		☞6	01/80 ▸ 07/82	133725	**819855**	72	N
2.5 D *888/A70/A71/A73/A75/A79/B71/C70/C73 C76/C79/D73/D75/D79*	D	2498	XD3P	M		☞6	08/82 ▸ 1991	133768	**819905**	81	Y
P4										
- *VP4A11*	E	-	XN8	M		☞5,8	1986 ▸	133747	**819900**	82	Y
2.5 D,2.5 TD *VP4A50, CP4/A50/C50*	D	2498	XD3, XD3TE	M			1986 ▸	133820	**819937**	81	Y
Partner (96>2002)										
1.1 i *5AHFXF, 5BHFXF*	E	1124	TU1JP	M			01/01 ▸ 11/02	1336Q2	**820430**	89	Y
1.4 i,1.4 i GPL *5BK/6C2/FXD/FXE, 5CK/FXD FXE, 5FK/6C2/FWF/FXD/FXE FXF*	E	1360	TU3JP	M			11/98 ▸ 11/02	1336Q2	**820430**	89	Y
1.6 i 16V *5FN/FUF/FUU*	E	1587	TU5JP4	M			09/00 ▸ 11/02	1336Q2	**820430**	89	Y
1.8 i *5FLFXE*	E	1761	XU7JB	M		☞4	05/97 ▸ 11/02	133837	**819946**	83	Y
1.8 D *5CA9AD, 5FA9AD, 5BA/9A2/9AD/9AG*	D	1769	XUD7	M		☞4	06/96 ▸ 11/02	133823	**819950**	83	Y
1.9 D *5BW/JYF/JZE/JZT, 5CW/JYF/JZE, 5FW JYF/JZE*	D	1868	DW8, DW8B	M		☞4	10/98 ▸ 11/02	133823	**819950**	83	Y
1.9 D *5CD9BD, 5DD9BD, 5BD/9BD/JYE, 5FD 9BD/JYE*	D	1905	XUD9A	M		☞4	06/96 ▸ 11/02	133823	**819950**	83	Y
2.0 HDi *5BR/HYE/HYF, 5CR/HYE/HYF 5FR/HYE/HYF/HYU*	D	1997	DW10TD	M		☞4	05/00 ▸ 11/02	133823	**819950**	83	Y
Partner (2002>)										
1.4 GNV,1.4 GPL *GCKFWB, GJKFWB, GBK/FWB FWC*	G	1360	TU3JP	M			04/03 ▸	1336Q1	**820434**	89	Y
1.1 i *GBHFXB*	E	1124	TU1JP	M			11/02 ▸	1336Q1	**820434**	89	Y
1.4 i *GBK/FVC/FWB, GJK/FVC/FWB*	E	1360	TU3A, TU3JP	M			11/02 ▸	1336Q1	**820434**	89	Y
1.6 i 16V *GCNFUB, GJNFUB, GBN/FUB* ▸10527	E	1587	TU5JP4	M			11/02 ▸ 09/05	1336Q1	**820434**	89	Y
1.6 HDi 16V *GC9HXC, GJ9HWC, GC9HWC GE9HXC, GB9HWC, GJ9HXC GB9HXC*	D	1560	DV6ATED4,DV6BTED4	M			01/06 ▸ 06/07	1336X2	●**820951**	83	Y
1.9 D *GCW.JYB, GEW.JYB, GJW.JYB, GBW/JYB*	D	1868	DW8B	M		☞4	11/02 ▸	133823	**819950**	83	Y
2.0 HDi *GCRHYB, GERHYB, GBR/HYB GJR/HY/HYK*	D	1997	DW10TD	M		☞4	11/02 ▸	133823	**819950**	83	Y
Ranch (96>2002)										
1.4 i *5BKFXD*	E	1360	TU3JP	M			11/98 ▸	1336Q2	**820430**	89	Y
1.8 i *5FLFXE*	E	1761	XU7JB	M		☞4	07/97 ▸	133837	**819946**	83	Y
1.8 D *5BA9AD*	D	1769	XUD7	M		☞4	06/96 ▸	133823	**819950**	83	Y
1.9 D *5CW.JZE, 5FW.JZE, 5BW/JZE*	D	1868	DW8	M		☞4	11/98 ▸	133823	**819950**	83	Y
1.9 D *5CD9BD, 5FDJYE, 5BD/9BD*	D	1905	XUD9A	M		☞4	06/96 ▸	133823	**819950**	83	Y
Ranch (2002>)										
1.4 i *GBKFWB*	E	1360	TU3JP	M			11/02 ▸	1336Q1	**820434**	89	Y
1.9 D *GBW.JYB, GCW.JYB*	D	1868	DW8B	M		☞4	11/02 ▸	133823	**819950**	83	Y
2.0 HDi *GBRHYB, GCRHYB*	D	1997	DW10TD	M		☞4	11/02 ▸	133823	**819950**	83	Y
Ranch (2006>)										
1.6 HDi 16V *GJ9HXC, GB9HW, GC9HXC GB9HXC*	D	1560	DV6ATED4,DV6BTED4	M			01/06 ▸ 05/08	1336X2	●**820951**	83	Y
PIAGGIO										
Porter										
1.0,1.0 i *S85L*	E	993	CB41,CB42	M			12/92 ▸ 05/98	1634187795000	**820042**	88	Y
PORSCHE										
924										
2.0 *92410*	E	1984	047.8	M		☞8	01/76 ▸ 08/79	059121113B	**819852**	83	Y

• **New** Nouveau **Nuevo** Novo **Nuovo** Nieuw **Neu** Yeni Новый Nou

		Type Ctr.		cc			AC			OE	Valeo	(°)C	
PORSCHE (.../...)													
924 (.../...)													
2.5	*92N4*	E	2479	M44.07	M		☞8	07/85 ▸ 07/87	059121113B	**819852**	83	Y
2.5	*92N4*	E	2479	M44.08	A		☞8	07/85 ▸ 07/87	059121113B	**819852**	83	Y
2.5	*92N4*	E	2479	M44.07	M			07/85 ▸ 07/87	94410612905	**819867**	80	Y
2.5	*92N4*	E	2479	M44.08	A			07/85 ▸ 07/87	94410612905	**819867**	80	Y
944 (81>)													
2.5	*945013*	E	2479	M44.01	M			06/81 ▸ 12/84	94410612905	**819867**	80	Y
2.5	*945012*	E	2479	M44.01	A			06/81 ▸ 12/84	94410612905	**819867**	80	Y
944-2 (85>91)													
2.7	*945027*	E	2681	M44.11	M			09/88 ▸ 08/89	94410612905	**819867**	80	Y
3.0	*945542*	E	2990	M44.41	M			12/88 ▸ 07/91	94410612905	**819867**	80	Y
PROTON													
300													
1.3 i	*C96MNJ*	E	1299	4G13	M		☞7,8	08/96 ▸	MD997604	**820963**	88	N
1.5 i	*C97MNJ*	E	1468	4G15	M		☞7,8	08/96 ▸	MD997604	**820963**	88	N
1.5 i	*C97MKJ*	E	1468	4G15	A		☞7,8	08/96 ▸	MD997604	**820963**	88	N
1.6 i	*C98MRH*	E	1597	4G92	A			08/96 ▸	MD315301	**820512**	82	Y
1.6 i	*C98MNH*	E	1597	4G92	M			08/96 ▸	MD315301	**820512**	82	Y
400													
1.3 i	*C96LNJ, C96SNJ*	E	1299	4G13	M		☞7,8	12/95 ▸	MD972903	**820963**	88	N
1.5 i	*C97LNJ, C97SNJ*	E	1468	4G15P	M		☞7,8	11/93 ▸	MD972903	**820963**	88	N
1.5 i	*C97LKJ, C97SKJ*	E	1468	4G15P	A		☞7,8	11/93 ▸	MD972903	**820963**	88	N
1.6 i	*C98SRH, C98LRH*	E	1597	4G92P	A			11/93 ▸ 2006	MD315301	**820512**	82	Y
1.6 i	*C98LNH, C98SNH, C98LNJ, C98SNJ*	E	1597	4G92P	M			11/93 ▸ 2006	MD315301	**820512**	82	Y
1.8 i,1.8 i 16V	*C99LRH, C99SRH*	E	1834	4G93,4G93-S	A			05/96 ▸ 2006	MD315301	**820512**	82	Y
1.8 i,1.8 i 16V	*C99SNH, C99LNH*	E	1834	4G93,4G93-S	M			05/96 ▸ 2006	MD315301	**820512**	82	Y
2.0 TD	*C95SNJ, C95SNH, C95LNH C95LNJ*	D	1998	4D68-3A0	M		☞4,9	02/97 ▸	MD317015	**820194**	76	N
2.0 D	*C95LNH, C95LNJ, C95SNH, C95SNJ*	D	1998	4D68-0E6	M			12/95 ▸ 2006	MD337408	**820512**	82	Y
RENAULT													
R4													
1.1 GPL	*R112, R237, 210/B*	G	1108	688	M		☞10	09/75 ▸	7701348374	**819923**	86	N
1.1 GPL	*R210*	G	1108	688	M		☞10	09/82 ▸ 1992	7701348374	**819923**	86	N
0.7	*R112*	E	747	680	M		☞10	07/61 ▸ 06/71	7701348376	**819922**	83	N
0.7	*R112*	E	747	680	M		☞10	07/61 ▸ 06/63	7701348374	**819923**	86	N
0.8	*R210, R239, R11/2*	E	782	839	M		☞10	07/71 ▸ 06/82	7701348376	**819922**	83	N
0.8	*R210, R239, R11/2*	E	845	B1B, 800	M		☞10	09/62 ▸ 06/86	7701348376	**819922**	83	N
0.8	*R210*	E	845	800	M		☞10	07/62 ▸ 06/66	7701348376	**819922**	83	N
1.0	*R112*	E	956	C1C	M		☞10	07/86 ▸ 1990	7701348374	**819923**	86	N
1.0	*R112*	E	956	C1C	M		☞10	07/86 ▸	7701348374	**819923**	86	N
1.1	*R112, R210, 3C2/3, R243, R23/7/9*	E	1108	C1E, 688	M		☞10	07/75 ▸	7701348374	**819923**	86	N
1.1	*R112, R237*	E	1108	688, C1E	M		☞10	09/75 ▸	7701348068	**819924**	89	N
1.1	*R210*	E	1108	C1E	M		☞10	09/82 ▸	7701348374	**819923**	86	N
R5													
0.8	*R122*	E	782	839	M		☞10	01/72 ▸ 06/81	7701348376	**819922**	83	N
0.8	*R122*	E	782	839	M		☞10	01/72 ▸ 06/81	7701348375	**819921**	75	N
0.9	*R122, R238, 139/1*	E	845	800	M		☞10	07/72 ▸ 06/85	7701348376	**819922**	83	N
0.9	*R122, R238, 139/1*	E	845	800	M		☞10	07/72 ▸ 06/85	7701348375	**819921**	75	N
1.0	*R122, R238, 139/2*	E	956	689	M		☞10	01/72 ▸ 06/85	7701348375	**819921**	75	N
1.0	*R122, R238, 139/2*	E	956	689	M		☞10	01/72 ▸ 06/85	7701348068	**819924**	89	N
1.1	*1397, 2387, 122/7*	E	1108	688	M		☞10	07/79 ▸ 06/85	7701348068	**819924**	89	N
1.1	*1397, 2387, 122/7*	E	1108	688, C1E	M		☞10	07/79 ▸ 06/85	7701348375	**819921**	75	N
1.3	*1395, R122*	E	1289	810	M		☞10	07/73 ▸ 06/85	7701348068	**819924**	89	N
1.3	*R122, 139/4/5/6*	E	1289	810	M		☞10	07/73 ▸ 06/85	7701348375	**819921**	75	N
1.3	*R122*	E	1289	810	M		☞10	07/75 ▸ 06/84	7701348376	**819922**	83	N

• **New** Nouveau **Nuevo** Novo **Nuovo** Nieuw **Neu** Yeni Новый Nou

			Type Ctr.		CC		AC		2 3	OE	Valeo	(°)C	
RENAULT (.../...)													
R5 (.../...)													
1.3	*1399, R122, 122/9*	E		1289	810	M		☞10	08/75 ▸ 06/85	7701348374	**819923**	86	N
1.3	*1395, R122*	E		1289	810	A		☞10	07/75 ▸ 06/85	7701348375	**819921**	75	N
1.3	*1395, R122*	E		1289	810	A		☞10	07/75 ▸ 06/85	7701348068	**819924**	89	N
1.4	*1399, R122, 122/9*	E		1397	C2J, 840	M		☞10	07/75 ▸ 06/85	7701348375	**819921**	75	N
1.4	*1399, R122, 122/9*	E		1397	840, C2J	M		☞10	07/75 ▸ 06/85	7701348068	**819924**	89	N
1.4	*1229, 8220*	E		1397	C7K, 847	M		☞10	08/79 ▸ 06/85	7701348374	**819923**	86	N
1.4	*1229, 1399*	E		1397	847	A		☞10	07/80 ▸ 06/85	7701348068	**819924**	89	N
1.4	*1229, 1399*	E		1397	847	A		☞10	07/80 ▸ 06/85	7701348375	**819921**	75	N
Super 5													
0.9	*C400, S400, B40/0*	E		956	C1C	M		☞10	06/84 ▸ 12/92	7701348376	**819922**	83	N
1.1	*B40/1/H, S401, C40/1/H*	E		1108	C1E	M		☞10	06/84 ▸	7701348376	**819922**	83	N
1.2	*C40F, S40F, B40/F*	E		1237	C1G	M		☞10	06/86 ▸ 08/90	7701348376	**819922**	83	N
1.4,1.4 Turbo,1.4 i	*B40/2/3/7/J/M, S407, C40 2/3/5/7/J/M*	E		1397	C3J, C1J, C2J	M		☞10	07/84 ▸	7701348376	**819922**	83	N
1.4	*B40/3/J, C40/3/J*	E		1397	C2J	A		☞10	07/84 ▸ 08/90	7701348376	**819922**	83	N
1.7	*B40/8/G/K, C40/8/9/G/K*	E		1721	F3N, F2N	M			06/86 ▸ 08/90	7700872314	**820008**	89	Y
1.7	*B408, C408*	E		1721	F3N	A			06/86 ▸ 08/90	7700872314	**820008**	89	Y
1.6 D	*C404, S404, B40/4*	D		1595	F8M	M			06/85 ▸	7700872314	**820008**	89	Y
R6													
0.8	*R118*	E		845	800	M		☞10	10/68 ▸ 1980	7701348376	**819922**	83	N
1.1	*R118*	E		1108	688	M		☞10	10/69 ▸ 1980	7701348376	**819922**	83	N
1.3	*R118*	E		1289	810	M		☞10	1976 ▸ 1980	7701348375	**819921**	75	N
R9													
1.4 Turbo	*L425*	E		1397	C1J	M		☞10	09/84 ▸ 09/88	7701348376	**819922**	83	N
1.7	*L42/6/D/E/F/L/N*	E		1721	F2N, F3N	M			09/83 ▸ 1988	7700872314	**820008**	89	Y
1.7	*L426*	E		1721	F2N	A			09/87 ▸ 1988	7700872314	**820008**	89	Y
1.6 D	*L424*	D		1595	F8M	M			10/82 ▸ 1988	7700872314	**820008**	89	Y
R11													
1.7 GPL	*B376*	G		1721	F2N	M			07/83 ▸ 07/89	7700872314	**820008**	89	Y
1.4 Turbo	*B375, C375*	E		1397	C1J	M		☞10	09/83 ▸ 07/89	7701348376	**819922**	83	N
1.7,1.7 i	*B37/6/D/E/F/L/N, C37/6/D E/F/L/N*	E		1721	F2N, F3N	M			07/83 ▸ 07/89	7700872314	**820008**	89	Y
1.7	*B376*	E		1721	F2N	A			06/87 ▸ 07/89	7700872314	**820008**	89	Y
1.6 D	*C374, S374, B37/4*	D		1595	F8M	M			07/83 ▸ 07/89	7700872314	**820008**	89	Y
R12													
1300	*R133, R236, R11/7*	E		1289	810	M		☞10	09/69 ▸ 1980	7701348068	**819924**	89	N
1300	*R117, R133*	E		1289	810	A		☞10	09/72 ▸ 1980	7701348068	**819924**	89	N
1400	*R117, R133*	E		1397	847	M		☞10	1976 ▸ 1980	7701348068	**819924**	89	N
1600	*R117, R133*	E		1565	807, 821	M		☞10	10/70 ▸ 1974	7701348068	**819924**	89	N
1650	*R117, R133*	E		1647	841, 843	M		☞10	1972 ▸ 1977	7701348068	**819924**	89	N
R14													
1.2	*121/0/1*	E		1218	145, 129	M			04/76 ▸ 1984	7700872314	**820008**	89	Y
1.2,1.4	*121/2/3*	E		1360	X5J, 150	M			09/80 ▸ 1984	7701348373	**819862**	89	Y
R15													
1300	*R130*	E		1289	810	M		☞10	09/71 ▸ 1980	7701348375	**819921**	75	N
1300	*R130*	E		1289	810	M		☞10	09/71 ▸ 1980	7701348376	**819922**	83	N
1300	*R130*	E		1289	810	A		☞10	09/71 ▸ 1980	7701348375	**819921**	75	N
1300	*R130*	E		1289	810	A		☞10	09/71 ▸ 1980	7701348376	**819922**	83	N
1650	*R130*	E		1647	841, 843	M		☞10	09/72 ▸ 1978	7701348374	**819923**	86	N
R16													
1600	*R115*	E		1565	807	M		☞10	03/68 ▸ 1976	7701348375	**819921**	75	N
1600	*R115*	E		1565	807, 821	M		☞10	03/68 ▸ 1979	7701348374	**819923**	86	N
1600	*R115*	E		1565	807, 821	A		☞10	03/68 ▸ 1976	7701348374	**819923**	86	N
1650	*R115*	E		1647	843	M		☞10	10/73 ▸ 1980	7701348375	**819921**	75	N
1650	*R115*	E		1647	843	M		☞10	10/73 ▸ 1980	7701348374	**819923**	86	N
1650	*R115*	E		1647	841, 843	A		☞10	10/73 ▸ 1980	7701348374	**819923**	86	N

• **New** Nouveau **Nuevo** Novo **Nuovo** Nieuw **Neu** Yeni Новый Nou

			Type Ctr.		CC			AC			OE	Valeo	(°)C	
RENAULT (.../...)														
R16 (.../...)														
1650	*R115*	E		1647	843	A		☞10	10/73 ▸ 1980	7701348375		**819921**	75	N
R17														
1600	*R13/1/2*	E		1565	807	M		☞10	07/71 ▸ 1978	7701348374		**819923**	86	N
1600	*R13/1/2*	E		1565	807	A		☞10	07/71 ▸ 1976	7701348374		**819923**	86	N
1600	*R13/1/2*	E		1605	844	M		☞10	10/76 ▸ 1978	7701348374		**819923**	86	N
1650	*R13/1/2*	E		1647	843, 841	M		☞10	07/71 ▸ 1980	7701348374		**819923**	86	N
1650	*R13/1/2*	E		1647	841, 843	A		☞10	07/71 ▸ 1980	7701348374		**819923**	86	N
R18														
1.4	*134/0/9, 2350, 135/0/9*	E		1397	847	M		☞10	09/77 ▸ 1986	7701348374		**819923**	86	N
1.4	*1350*	E		1397	847	M		☞10	02/79 ▸ 1986	7701348375		**819921**	75	N
1.4	*1340*	E		1397	847	A		☞10	03/79 ▸ 1986	7701348374		**819923**	86	N
1.6 Turbo	*1345, 1355*	E		1565	A5L	M		☞10	09/80 ▸ 09/85	7701348374		**819923**	86	N
1.6,1.6 i	*134/1/2, 135/1/2/8*	E		1647	A2M, 841, 843, A6M	M		☞10	04/78 ▸ 1986	7701348374		**819923**	86	N
1.6,1.6 i	*134/1/2, 135/1/8*	E		1647	843, A2M, A6M	M		☞10	07/79 ▸ 1986	7701348375		**819921**	75	N
1.6,1.6 i	*134/1/2, 135/1/2/8*	E		1647	841, A6M, 843	A		☞10	07/79 ▸ 1986	7701348374		**819923**	86	N
1.6,1.6 i	*1342, 1358*	E		1647	843, A6M	A		☞10	07/79 ▸ 1984	7701348375		**819921**	75	N
2.0	*1343, 1353*	E		1995	J6R	M		☞10	09/81 ▸ 1986	7701349415		**819891**	88	Y
2.0	*1343, 1353*	E		1995	J6R	A		☞10	09/81 ▸ 10/86	7701349415		**819891**	88	Y
2.2 Turbo	*135B*	E		2165	J7T	M		☞10	07/83 ▸ 06/86	7701349415		**819891**	88	Y
2.2 Turbo	*135B*	E		2165	J7T	A		☞10	07/83 ▸ 1986	7701349415		**819891**	88	Y
2.1 D,2.1 TD Turbo	*134/4/6, 2354, 135/4/6*	D		2068	852, J8S	M			09/80 ▸ 1986	7700665226		**819937**	81	Y
2.1 D	*1344, 1354*	D		2068	J8S	A			09/80 ▸ 1986	7700665226		**819937**	81	Y
2.1 D	*1344*	D		2068	J8S	A			09/80 ▸ 1986	7700697157		**819898**	88	Y
R19														
1.2 e	*C53W, L53W, B53/W*	E		1171	E7F	M			05/92 ▸ 10/95	7700858802		**820009**	91	Y
1.2	*C530, L530, S530, B53/0*	E		1237	C1G	M		☞10	07/88 ▸ 10/95	7701348376		**819922**	83	N
1.4,1.4 GPL,1.4 e,1.4 i	*B53/5/7/A/G, C53/5/7/A S537, L53/5/7/A/G*	E		1390	E6J, E7J	M			07/88 ▸ 11/95	7700858802		**820009**	91	Y
1.4,1.4 e,1.4 i	*B53/7/A, C53/7/A, L53/7/A*	E		1390	E6J, E7J	A			07/88 ▸ 11/95	7700858802		**820009**	91	Y
1.4,1.4 e,1.4 i	*B53/1/2/H/P, C53/1/2/P S532, L53/1/2/H/P*	E		1397	C3J, C2J, C1J	M		☞10	07/88 ▸ 10/95	7701348376		**819922**	83	N
1.7,1.7 i	*B53/3/6/B/C/E/F/M, D53C C53/3/B/C/E/F/M, L53/3/6 B/C/F*	E		1721	F2N, F3N	M			07/88 ▸ 11/95	7700872314		**820008**	89	Y
1.7	*L536*	E		1721	F2N	M		☞1	06/89 ▸ 08/90	7700735456		**819916**	78	Y
1.7,1.7 i	*B53/3/B/C, D53C, C53/3/B C, L53/3/B/C*	E		1721	F3N, F2N	A			07/88 ▸ 11/95	7700872314		**820008**	89	Y
1.8 16V,1.8 i 16V	*B53/9/D, D53D, C53/9/D L53/9/D*	E		1763	F7P	M			07/88 ▸ 10/95	7700872314		**820008**	89	Y
1.8 i	*353/A/C/D, 453/A/C/D/H, 553/A/C/D/H 853/A/C, B53/8/Y, D53Y, C53/8/Y L53/8/Y*	E		1794	F3P	M			05/92 ▸ 11/95	7700872314		**820008**	89	Y
1.8 i	*353/F, 453/F/H, 853F, B53Y, 553/F/H C53/N/Y, D53/N/Y, L53/N/Y*	E		1794	F3P	A			05/92 ▸ 11/95	7700872314		**820008**	89	Y
1.9 D,1.9 TD	*B53/4/J, C53/4/J/Z L53/4/J/Z, S53/4/J*	D		1870	F8Q	M			07/88 ▸ 10/95	7700872314		**820008**	89	Y
1.9 TD	*B53/K/T, C53/K/T, S53K L53/K/T*	D		1870	F8Q	M		☞4	09/90 ▸ 10/95	7700862200		**820010**	83	Y
R20														
1.6		E		1647	843	A			12/75 ▸ 12/81	7701348139		**819879**	84	N
1.6		E		1647	843	M			12/75 ▸ 12/81	7701348139		**819879**	84	N
2.0	*R127*	E		1995	829	M		☞10	07/77 ▸ 1984	7701349415		**819891**	88	Y
2.0	*R127*	E		1995	829	A		☞10	07/77 ▸ 1984	7701349415		**819891**	88	Y
2.2	*R127*	E		2165	851	M		☞10	07/80 ▸ 1984	7701349415		**819891**	88	Y
2.2	*R127*	E		2165	851	A		☞10	07/80 ▸ 1984	7701349415		**819891**	88	Y
2.1,2.1 TD Turbo D	*R127*	D		2068	852, J8S	M			10/79 ▸ 1984	7700665226		**819937**	81	Y
R21														
1.4	*K48U, B48/D, L48/D/U*	E		1397	C2J, C2L	M		☞10	06/88 ▸ 1994	7701348376		**819922**	83	N
1.4	*K48U*	E		1397	C2L	M		☞10	06/88 ▸ 11/92	7701348375		**819921**	75	N

• **New** Nouveau **Nuevo** Novo **Nuovo** Nieuw **Neu** Yeni Новый Nou

Valeo

Type Ctr.		CC		AC		2 3	OE	Valeo	(°)C	
RENAULT (.../...)										
R21 (.../...)										
1.4 *B48U, L48U*	E	1397	C2L	A		☞10	06/88 ▸ 03/92	7701348376	**819922**	83	N
1.7,1.7 i *B48/1/2/4/E/F, K48/1/2/4 E/F/M/N, L48/1/2/4/E/F/M N, S48/1/2*	E	1721	F2N, F3N	M			03/86 ▸	7700872314	**820008**	89	Y
1.7,1.7 i *B48/2/E, L48/2/E*	E	1721	F2N, F3N	A			06/88 ▸ 04/93	7700872314	**820008**	89	Y
2.0 *K48J, L48J, B48J/J*	E	1965	F2R	M			06/86 ▸ 03/93	7700872314	**820008**	89	Y
2.0 *B48J, L48J*	E	1965	F2R	M		☞1	09/86 ▸ 03/92	7700735456	**819916**	78	Y
1.9 D *K48H, B48/H, S48H, L48/H/I*	D	1870	F8Q	M			05/89 ▸ 1994	7700872314	**820008**	89	Y
2.1 D,2.1 TD *B48/0/6/7/8/P/V/W, K48/0 6/7/8/P/V/W, L48/0/6/7/8 A/O/P/V/W, S48/0/6/V*	D	2068	J8S	M			06/86 ▸	7700665226	**819937**	81	Y
R25										
2.0 ▸308131 *B29/7/H*	E	1995	J6R, J7R	M		☞10	09/83 ▸	7701349415	**819891**	88	Y
2.0 ▸308131 *B29/7/H*	E	1995	J7R, J6R	A		☞10	09/83 ▸	7701349415	**819891**	88	Y
2.2 *B29/B/E*	E	2165	J7T	M		☞10	09/83 ▸ 1992	7701349415	**819891**	88	Y
2.2 *B29/B/E*	E	2165	J7T	A		☞10	09/83 ▸ 1992	7701349415	**819891**	88	Y
2.5 V6 Turbo *B29/5/G*	E	2458	Z7U	M		☞8	09/85 ▸ 1992	7700703136	**819840**	86	Y
2.6 V6 Injection *B298*	E	2664	Z7V	M		☞8	09/83 ▸ 05/88	7700703136	**819840**	86	Y
2.6 V6 Injection *B298*	E	2664	Z7V	A		☞8	09/83 ▸ 05/89	7700703136	**819840**	86	Y
2.8 V6,2.8 V6 Injection *B29/3/A/F*	E	2849	Z7W	M		☞8	09/85 ▸ 1992	7700703136	**819840**	86	Y
2.8 V6 *B29/3/F*	E	2849	Z7W	A		☞8	09/85 ▸ 1992	7700703136	**819840**	86	Y
2.1 D,2.1 TD *B29/0/6/W*	D	2068	J8S	M			09/83 ▸ 1992	7700665226	**819937**	81	Y
R30										
2.7 *R127*	E	2664	140, 112, 144	M		☞10	03/75 ▸ 1984	7701349415	**819891**	88	Y
2.7 *R127*	E	2664	140, 112, 144	A		☞10	03/75 ▸ 1984	7701349415	**819891**	88	Y
2.1 TD Turbo D *1270*	D	2068	J8S	M			10/81 ▸ 1984	7700665226	**819937**	81	Y
Alpine A310										
2.7 *2700*	E	2664	112	M		☞10	07/76 ▸ 1984	7701349415	**819891**	88	Y
Avantime										
2.0 i Turbo 16V *DE0/U/V*	E	1998	F4R	M		☞4	11/01 ▸ 03/03	7700872554	**820025**	89	Y
2.0 i Turbo 16V *DE0/U/V*	E	1998	F4R	A		☞4	11/01 ▸ 03/03	7700872554	**820025**	89	Y
3.0 i V6 24V *DE0T*	E	2946	L7X	M			09/01 ▸ 03/03	9617028380	**820131**	82	N
3.0 i V6 24V *DE0/4/T*	E	2946	L7X	A			09/01 ▸ 03/03	9617028380	**820131**	82	N
Cherokee										
2.1 TD *JJ8B, BL7/7/8/9*	D	2068	J8S	M			09/84 ▸ 12/92	7700697157	**819898**	88	Y
Clio (90>98)										
1.0 *B570, C570*	E	956	C1C	M		☞10	06/90 ▸ 12/93	7701348376	**819922**	83	N
1.1 *C571, S571, B57/1*	E	1108	C1E	M		☞10	06/90 ▸ 02/96	7701348376	**819922**	83	N
1.2 i *357/K/Y, 657K, 557/K/Y*	E	1149	D7F	M			03/96 ▸ 02/98	7700868980	**820048**	89	N
1.2,1.2 i *357/F/G/J/L, 557/F/G/J/L R, B57/2/A/N/R/S, C57/2/A R/S, S57/2/A/R*	E	1171	E7F, E5F	M			06/90 ▸ 02/98	7700858802	**820009**	91	Y
1.4,1.4 i *557/B, B57/3/B/J/P/T/Y C57/3/B/J/T/Y*	E	1390	E7J, E6J	M			06/90 ▸ 02/98	7700858802	**820009**	91	Y
1.4,1.4 i *B57/3/B/J/T, C57/3/B/J/T*	E	1390	E7J, E6J	A			06/90 ▸ 02/98	7700858802	**820009**	91	Y
1.7 *B574, C574*	E	1721	F2N	M			06/90 ▸ 02/96	7700872314	**820008**	89	Y
1.8 i 16S *C57/5/D*	E	1763	F7P	M			03/91 ▸ 02/96	7700872314	**820008**	89	Y
1.8 i *557U, 357/E/U/V, B57/C/U, C57/9/C/H U*	E	1794	F3P	M			09/90 ▸ 02/98	7700872314	**820008**	89	Y
1.8 i *357/A/D/U, B578, C578, 557/D/U*	E	1794	F3P	A			01/94 ▸ 02/98	7700872314	**820008**	89	Y
2.0 i *C57M*	E	1998	F7R	M			05/93 ▸ 02/96	7700872314	**820008**	89	Y
1.9 D *557N, 357/N, 657/H/M/N, B57/6/V/L C57/6/V/L, S57/6/V/L*	D	1870	F8Q	M			06/90 ▸ 02/98	7700872314	**820008**	89	Y
Clio II (98>2001)										
1.2 i,1.2 i GPL *BB0/A/B/F, SB0A, CB0/A/B F*	E	1149	D7F	M			03/98 ▸ 03/01	7700868980	**820048**	89	N

• **New** Nouveau **Nuevo** Novo **Nuovo** Nieuw **Neu** Yeni Новый Nou

Type Ctr.	cc		AC		2 3	OE	Valeo	(°)C	
RENAULT (.../...)									
Clio II (98>2001) (.../...)									
1.4 i *LB03*	E	1390	K7J	M			05/00 ▸ 03/01	7700872314	**820008**	89	Y
1.4 i,1.4 i 16V *BB0/C/L/S, LB03, CB0/C/L/S*	E	1390	E7J, K4J, K7J	M		☞4	03/98 ▸ 03/01	7700872554	**820025**	89	Y
1.4 i,1.4 i 16V *BB0/L/S, CB0/L/S*	E	1390	K4J, E7J	A		☞4	10/98 ▸ 03/01	7700872554	**820025**	89	Y
1.6 i,1.6 i 16V *BB0/0/D, LB00, CB0/D/H/T*	E	1598	K7M, K4M	M		☞4	03/98 ▸ 03/01	7700872554	**820025**	89	Y
1.6 i *BB0D, CB0D*	E	1598	K7M	A		☞4	03/98 ▸ 03/01	7700872554	**820025**	89	Y
2.0 i 16V *CB0M*	E	1998	F4R	M		☞4	01/00 ▸ 03/01	7700872554	**820025**	89	Y
3.0 i V6 24V *CB1A*	E	2946	L7X	M			01/00 ▸ 03/01	9617028380	**820131**	82	N
1.9 D *CB0E, LB02, BB0/2/E, SB0/E/R*	D	1870	F8Q	M			03/98 ▸ 03/01	7700109641	**820179**	89	Y
1.9 D,1.9 dTi *BB0/2/E/J/U, CB0/E/J/U SB0/E/J/R*	D	1870	F8Q, F9Q	M			03/98 ▸ 03/01	7700872314	**820008**	89	Y
Clio II (2001>)									
1.2 i *CB0A, SB0A, BB0/A*	G	1149	D7F	M			04/01 ▸	7700110716	**820138**	89	Y
1.0 i *BB0Y*	E	999	D7D	M			04/01 ▸	7700110716	**820138**	89	Y
1.2 i,1.2 i 16V *BB0/5/A/F/W, BB1/0/1/K CB0/5/A/F/W, CB1/0/1/K SB10, SB0/A/F*	E	1149	D7F, D4F	M			04/01 ▸	7700110716	**820138**	89	Y
1.4 i,1.4 i 16V *BB0/B/C/L/P/S, BB1/3/7/L CB0/B/C/L/P/S, CB1/3/7/L*	E	1390	K4J, E7J, K7J	M		☞4	04/01 ▸	7700872554	**820025**	89	Y
1.4 i,1.4 i 16V *BB0/L/P/S, BB1/3/L, CB0/L P/S, CB1/3/L*	E	1390	E7J, K4J	A		☞4	04/01 ▸	7700872554	**820025**	89	Y
1.6 i,1.6 i 16V *BB0/0/1/D/H/T, BB1/4/D/J CB0/D/H/T, CB1/4/D*	E	1598	K7M, K4M	M		☞4	04/01 ▸	7700872554	**820025**	89	Y
1.6 i,1.6 i 16V *BB0/D, CB0D, CB14, BB1/4 R*	E	1598	K7M, K4M	A		☞4	04/01 ▸	7700872554	**820025**	89	Y
2.0 i 16V *CB0/M, CB1/5/C/N/S*	E	1998	F4R	M		☞4	04/01 ▸	7700872554	**820025**	89	Y
1.5 dCi *BB0/7/8, CB0/7/8, SB0/7/9*	D	1461	K9K	M		☞4	04/01 ▸	8200039885	**820537**	89	Y
1.9 D,1.9 dTi *BB0/2/E/U, CB2C, CB0/E/J U/V, SB0/E/J/R/U*	D	1870	F9Q, F8Q	M			04/01 ▸	7700872314	**820008**	89	Y
1.9 D,1.9 dTi *BB0V, BB0J, BB2C, SB0J CB0V, BB0U, CB0J, CB2C*	D	1870	F8Q,F9Q	M			04/01 ▸	8200074346	**820527**	89	Y
Clio III (2005>)									
1.2 i 16V *BR0/2/J/Q/R, BR1/D/L CR1L, SR0J, CR0/2/J/Q/R*	E	1149	D4F	M			09/05 ▸	7700110716	**820138**	89	Y
2.0 i 16V *CR0N*	E	1998	F4R	M			06/06 ▸	8200525397	●**820786**	75	Y
1.5 dCi *BR0/V/W, BR1/A/B/F/G CR1G, CR0/V/W*	D	1461	K9K	M		☞4	09/05 ▸	8200248531	**820537**	89	Y
Clio III FL (2009>)									
1.2 i 75 16V *CR1U, KR1U, SR1U, BR1/U*	F	1149	D4F	M			04/09 ▸	8200660882	**820138**	89	Y
1.2 TCe 100 16V 1.2 i 65 16V,1.2 i 75 16V *BR0/2/J/P/R, BR1/1/D/L CR11, CR0/2/J/P/R, SR0P KR0/2/J/P*	E	1149	D4F	M			04/09 ▸	8200660882	**820138**	89	Y
Espace (84>91)									
2.0 *S112, J11/2/6*	E	1995	J6R, J7R	M		☞10	09/84 ▸ 1991	7701349415	**819891**	88	Y
2.2 *J117*	E	2165	J7T	M		☞10	09/86 ▸ 1991	7701349415	**819891**	88	Y
2.1 TD *S115, J11/4/5*	D	2068	J8S	M			09/84 ▸ 1991	7700697157	**819898**	88	Y
Espace II (91>96)									
2.8 V6 *J638*	E	2849	Z7W	M		☞8	04/91 ▸ 08/96	7700703136	**819840**	86	Y
2.8 V6 *J63/8/J*	E	2849	Z7W	A		☞8	04/91 ▸ 08/96	7700703136	**819840**	86	Y
2.1 dT *J63/3/4/5/D/E, S63/5/D*	D	2068	J8S	M			01/91 ▸ 08/96	7700665226	**819937**	81	Y
Espace III (96>2000)									
2.0 i *JE0A*	E	1998	F3R	M			10/96 ▸ 06/00	7700872314	**820008**	89	Y
2.0 i 16V *JE0N*	E	1998	F4R	M		☞4	12/98 ▸ 06/00	7700872554	**820025**	89	Y
2.0 i *JE0A*	E	1998	F3R	A			10/96 ▸ 06/00	7700872314	**820008**	89	Y
3.0 i V6 *JE0G*	E	2946	L7X	A			07/98 ▸ 06/00	9617028380	**820131**	82	N
1.9 dTi *JE0M*	D	1870	F9Q	M			1999 ▸ 06/00	7700109641	**820179**	89	Y

• **New** Nouveau **Nuevo** Novo **Nuovo** Nieuw **Neu** Yeni Новый Nou

			cc			AC				OE	Valeo	(°)C	
RENAULT (.../...)													
Espace III (96>2000) (.../...)													
2.2 dT	JE0/E/H/P	D	2188	G8T		M		☞4	10/96 ▸ 06/00	7700868274	**820047**	83	Y
Espace III (2000>2002)													
2.0 i 16V	JE0L	E	1998	F4R		M		☞4	07/00 ▸ 10/02	7700872554	**820025**	89	Y
2.0 i 16V	JE0L	E	1998	F4R		A		☞4	07/00 ▸ 10/02	7700872554	**820025**	89	Y
3.0 i V6	JE0G	E	2946	L7X		A			07/00 ▸ 10/02	9617028380	**820131**	82	N
1.9 dTi	JE0M	D	1870	F9Q		M			07/00 ▸ 10/02	7701474248	**820179**	89	Y
1.9 dTi	JE0M	D	1870	F9Q		M			07/00 ▸ 10/02	7700872314	**820008**	89	Y
Espace IV (2002>2006)													
2.0 i 16V,2.0 i Turbo 16V	JK1D, JK0/8/A/B/D/K/L/N	E	1998	F4R		M		☞4	09/02 ▸ 02/06	7700872554	**820025**	89	Y
2.0 i 16V,2.0 i Turbo 16V	JK1D, JK0/8/A/B/D/K/N	E	1998	F4R		A		☞4	09/02 ▸ 02/06	7700872554	**820025**	89	Y
1.9 dCi	JK0G, JK0U	D	1870	F9Q		M			09/02 ▸ 02/06	8200074346	**820527**	89	Y
3.0 dCi 24V	JK0J	D	2958	P9X		A			09/02 ▸	7701474510	**820596**	82	N
Espace IV FL (2006>)													
2.0 i 16V	JK09	E	1998	F4R		M		☞4	03/06 ▸	7700872554	**820025**	89	Y
3.5 i V6 24V	JK00	E	3498	V4Y		A			03/06 ▸	7701474510	**820596**	82	N
3.0 dCi 24V	JK0/E/Y	D	2958	P9X		A		☞4,9	03/06 ▸	7701057805	**820513**	82	Y
Fuego													
1.4	R136	E	1397	847		M		☞10	09/79 ▸ 1985	7701348375	**819921**	75	N
1.4	R136	E	1397	847		M		☞10	09/79 ▸ 1985	7701348374	**819923**	86	N
1.6	R136	E	1647	A6M		M		☞10	09/79 ▸ 1985	7701348375	**819921**	75	N
1.6	R136	E	1647	A6M		A		☞10	09/79 ▸ 1985	7701348375	**819921**	75	N
2.0	R136	E	1995	829		M		☞10	09/80 ▸ 1985	7701349415	**819891**	88	Y
2.0	R136	E	1995	J6R		A		☞10	09/80 ▸ 1985	7701349415	**819891**	88	Y
2.2,2.2 Turbo	136B, R136	E	2165	J7T		M		☞10	07/83 ▸ 06/85	7701349415	**819891**	88	Y
2.2	136B, R136	E	2165	J7T		A		☞10	07/83 ▸ 06/85	7701349415	**819891**	88	Y
2.1 TD	1366	D	2068	J8S		M			09/82 ▸ 1984	7700697157	**819898**	88	Y
Jeep													
2.0	RF87	E	1995	J5R		M		☞10	05/82 ▸ 1986	7701349415	**819891**	88	Y
2.1 TD	PF87	D	2068	J8S		M			05/82 ▸ 1986	7700665226	**819937**	81	Y
Laguna (94>98)													
1.8 i	B56/0/A/B/S/T/Z	E	1794	F3P		M			01/94 ▸ 04/98	7700872314	**820008**	89	Y
2.0 i 16V	B56/D/M	E	1948	N7Q		M		☞8	05/95 ▸ 04/98	7439180811	**820040**	90	Y
2.0 i	B56/C/H/L/N	E	1998	F3R		M			01/94 ▸ 04/98	7700872314	**820008**	89	Y
2.0 i	B56/C/H/L/N	E	1998	F3R		A			01/94 ▸ 04/98	7700872314	**820008**	89	Y
3.0 i V6	B56V	E	2946	L7X		M			05/97 ▸ 04/98	9617028380	**820131**	82	N
3.0 i V6	B56V	E	2946	L7X		A			07/97 ▸ 04/98	9617028380	**820131**	82	N
2.2 D	B56/2/F	D	2188	G8T		M		☞4	03/94 ▸ 11/95	7701038494	**819955**	83	Y
2.2 D,2.2 Dt	B56/2/6/9/F/P	D	2188	G8T		M		☞4	11/95 ▸ 04/98	7700868274	**820047**	83	Y
Laguna (98>2000)													
1.8 i GPL	B560	G	1794	F3P		M			05/98 ▸ 12/00	7700872314	**820008**	89	Y
1.6 i 16V	B56/1/8	E	1598	K4M		M		☞4	05/98 ▸ 12/00	7700872554	**820025**	89	Y
1.8 i 16V	B56/3/4/Y	E	1783	F4P		M		☞4	09/98 ▸ 12/00	7700872554	**820025**	89	Y
1.8 i	B560	E	1794	F3P		M			09/99 ▸ 12/00	7700872314	**820008**	89	Y
2.0 i 16V	B56M	E	1948	N7Q		M		☞8	05/98 ▸ 12/00	7439180811	**820040**	90	Y
2.0 i	B56L	E	1998	F3R		M			05/98 ▸ 12/00	7700872314	**820008**	89	Y
2.0 i 16V	556A	E	1998	F4R		M		☞4	10/99 ▸ 12/00	7700872554	**820025**	89	Y
2.0 i	B56/L/U	E	1998	F3R		A			05/98 ▸ 12/00	7700872314	**820008**	89	Y
3.0 i V6	B56V	E	2946	L7X		M		☞8	05/98 ▸ 12/00	7439180811	**820040**	90	Y
3.0 i V6	B56V	E	2946	L7X		M			05/98 ▸ 12/00	9617028380	**820131**	82	N
3.0 i V6	B56V	E	2946	L7X		A		☞8	05/98 ▸ 12/00	7439180811	**820040**	90	Y
3.0 i V6	B56V	E	2946	L7X		A			05/98 ▸ 12/00	9617028380	**820131**	82	N
1.9 dCi,1.9 dTi	B56/J/W	D	1870	F9Q		M			05/98 ▸ 12/00	7700872314	**820008**	89	Y
1.9 dTi	B56J	D	1870	F9Q		M			05/98 ▸ 12/00	7700109641	**820179**	89	Y
1.9 dTi	B56J	D	1870	F9Q		A			07/99 ▸ 12/00	7700872314	**820008**	89	Y
2.2 dT	B569	D	2188	G8T		M		☞4	05/98 ▸ 12/00	7700868274	**820047**	83	Y
Laguna Nevada (95>98)													
1.8 i	K56/0/S/T/Z	E	1794	F3P		M			07/95 ▸ 04/98	7700872314	**820008**	89	Y

• **New** Nouveau **Nuevo** Novo **Nuovo** Nieuw **Neu** Yeni Новый Nou

			CC			AC			OE	Valeo	(°)C		
RENAULT (.../...)													
Laguna Nevada (95>98) (.../...)													
2.0 i 16V	*K56/D/M*	E	1948	N7Q	M		☞8	07/95 ▸ 04/98	7439180811	**820040**	90	Y
2.0 i	*K56/C/H/L/N*	E	1998	F3R	M			07/95 ▸ 04/98	7700872314	**820008**	89	Y
2.0 i	*K56/C/H/L/N*	E	1998	F3R	A			07/95 ▸ 04/98	7700872314	**820008**	89	Y
3.0 i V6	*K56V*	E	2946	L7X	M			05/97 ▸ 04/98	9617028380	**820131**	82	N
3.0 i V6	*K56V*	E	2946	L7X	A			07/97 ▸ 04/98	9617028380	**820131**	82	N
2.2 D	*S56F, K56/2/F*	D	2188	G8T	M		☞4	07/95 ▸ 11/95	7701038494	**819955**	83	Y
2.2 D,2.2 dT	*K56/2/6/9/F, S56/6/F*	D	2188	G8T	M		☞4	07/95 ▸ 04/98	7700868274	**820047**	83	Y
Laguna Nevada (98>2000)													
1.8 i GPL	*K560*	G	1794	F3P	M			05/98 ▸ 12/00	7700872314	**820008**	89	Y
1.6 i 16V	*K56/1/8*	E	1598	K4M	M		☞4	05/98 ▸ 12/00	7700872554	**820025**	89	Y
1.8 i 16V	*K56/3/4/Y*	E	1783	F4P	M		☞4	05/98 ▸ 12/00	7700872554	**820025**	89	Y
1.8 i	*K560*	E	1794	F3P	M			05/99 ▸ 12/00	7700872314	**820008**	89	Y
2.0 i 16V	*K56M*	E	1948	N7Q	M		☞8	05/98 ▸ 12/00	7439180811	**820040**	90	Y
2.0 i	*K56L*	E	1998	F3R	M			05/98 ▸ 12/00	7700872314	**820008**	89	Y
2.0 i	*K56L*	E	1998	F3R	A			05/98 ▸ 12/00	7700872314	**820008**	89	Y
3.0 i V6	*K56V*	E	2946	L7X	M			05/98 ▸ 12/00	9617028380	**820131**	82	N
3.0 i V6	*K56V*	E	2946	L7X	M		☞8	05/98 ▸	7439180811	**820040**	90	Y
3.0 i V6	*K56V*	E	2946	L7X	A			05/98 ▸ 12/00	9617028380	**820131**	82	N
3.0 i V6	*K56V*	E	2946	L7X	A		☞8	05/98 ▸ 12/00	7439180811	**820040**	90	Y
1.9 dCi,1.9 dTi	*S56J, K56/J/W*	D	1870	F9Q	M			05/98 ▸ 12/00	7700872314	**820008**	89	Y
1.9 dCi,1.9 dTi	*S56J, K56/J/W*	D	1870	F9Q	M			05/98 ▸ 12/00	7700109641	**820179**	89	Y
1.9 dCi	*K56W*	D	1870	F9Q	M			09/99 ▸ 12/00	7701474248	**820179**	89	Y
1.9 dTi	*K56J*	D	1870	F9Q	A			09/99 ▸ 12/00	7700872314	**820008**	89	Y
2.2 dT	*K569*	D	2188	G8T	M		☞4	05/98 ▸ 12/00	7700868274	**820047**	83	Y
Laguna II (2001>)													
1.6 i GPL 16V	*BG0L, KG0L*	G	1598	K4M	M		☞4	01/01 ▸	7700872554	**820025**	89	Y
1.6 i 16V	*BG0/A/L/U, KG0/A/L/U*	E	1598	K4M	M		☞4	01/01 ▸	7700872554	**820025**	89	Y
1.6 i 16V	*BG0/A/U, KG0/A/U*	E	1598	K4M	A		☞4	01/01 ▸	7700872554	**820025**	89	Y
1.8 i 16V	*BG0/B/C/J/M/V, KG0/B/C/J M/V*	E	1783	F4P	M		☞4	01/01 ▸	7700872554	**820025**	89	Y
1.8 i 16V	*KG0J, BG0/6/J*	E	1783	F4P	A		☞4	01/01 ▸	7700872554	**820025**	89	Y
2.0 i 16V,2.0 ide 16V	*BG0/0/N/W, KG0/0/N/W*	E	1998	F4R, F5R	M		☞4	01/01 ▸	7700872554	**820025**	89	Y
2.0 i 16V,2.0 ide 16V	*BG0/N/W, KG0/N/W*	E	1998	F5R, F4R	A		☞4	01/01 ▸	7700872554	**820025**	89	Y
3.0 i V6 24V	*BG0/1/D/Y, KG0/1/D/Y*	E	2946	L7X	A			01/01 ▸	9617028380	**820131**	82	N
1.9 dCi	*BG0/G/R, KG0/G/R*	D	1870	F9Q	M			01/01 ▸ 06/01	7700872314	**820008**	89	Y
1.9 dCi ▸ 010608	*BG0G, KG0G*	D	1870	F9Q	M			01/01 ▸ 06/01	7701474248	**820179**	89	Y
1.9 dCi	*BG0E, KG0E*	D	1870	F9Q	A			01/01 ▸	8200074346	**820527**	89	Y
Laguna II (2005>)													
1.6 i 16V	*BG0L, KG0L*	E	1598	K4M	M		☞4	03/05 ▸	7700872554	**820025**	89	Y
1.8 i 16V	*BG0/4/B/C/J/M/V, KG0/4/B C/J/M/V*	E	1783	F4P	M		☞4	03/05 ▸	7700872554	**820025**	89	Y
1.8 i 16V	*BG0/6/J/M, KG0/6/J/M*	E	1783	F4P	A		☞4	03/05 ▸	8200479402	**820025**	89	Y
2.0 i 16V,2.0 i Turbo 16V	*BG0/0/3/K/N/P/S/T/W/Z BG1/L/M/Y, KG0/0/3/K/N/P S/T/W/Z, KG1/L/Y*	E	1998	F4R, F5R	M		☞4	03/05 ▸	7700872554	**820025**	89	Y
2.0 i 16V,2.0 i Turbo 16V	*BG0/0/3/K/N/P/S/W/Z, BG1 L/M/Y, KG1Y, KG0/0/3/K/N P/S/W/Z*	E	1998	F4R, F5R	A		☞4	03/05 ▸	8200479402	**820025**	89	Y
3.0 i V6 24V	*BG1K, BG0/1/2/D/Y, KG1K KG0/1/2/D/Y*	E	2946	L7X	A			03/05 ▸	9617028380	**820131**	82	N
Lutecia (Jap)													
1.4 i	*B57B, C57B*	E	1390	E7J	M			03/96 ▸ 02/98	7700858802	**820009**	91	Y
1.8 i	*357A, 557A*	E	1794	F3P	A			10/94 ▸ 02/98	7700872314	**820008**	89	Y
Mégane (95>99)													
1.4 i	*BA0/E/T*	E	1390	E7J	M		☞4	11/95 ▸ 02/99	7700872554	**820025**	89	Y
1.4 i 16V	*DA0W*	E	1390	K4J	M			09/98 ▸ 02/99	7700109641	**820179**	89	Y
1.4 i 16V	*DA0W*	E	1390	K4J	M			09/98 ▸ 02/99	7700872314	**820008**	89	Y
1.6 i	*DA0F, EA0F, BA0/F/L/S*	E	1598	K7M	M		☞4	11/95 ▸ 02/99	7700872554	**820025**	89	Y

• **New** Nouveau **Nuevo** Novo **Nuovo** Nieuw **Neu** Yeni Новый Nou

Valeo

RENAULT (.../...)

Mégane (95>99) (.../...)

1.6 i	BA0/F/L/S	E	1598	K7M	M			11/95 ▸ 02/99	7700872314	**820008**	89	Y
1.6 i	BA0F, DA0F	E	1598	K7M	A		☞4	11/95 ▸ 02/99	7700872554	**820025**	89	Y
1.6 i	BA0F	E	1598	K7M	A			11/95 ▸ 02/99	7700872314	**820008**	89	Y
2.0 i	DA0G, EA0G, BA0/G	E	1998	F3R	M			11/95 ▸ 02/99	7700109641	**820179**	89	Y
2.0 i	DA0G	E	1998	F3R	M		☞4	11/95 ▸ 06/97	7700872554	**820025**	89	Y
2.0 i,2.0 i 16V	BA0/7/G/H, DA0/G/H, EA0/G/H	E	1998	F3R, F7R	M			11/95 ▸ 02/99	7700872314	**820008**	89	Y
2.0 i	DA0G, EA0G, BA0/7/G	E	1998	F3R	A			11/95 ▸ 02/99	7700872314	**820008**	89	Y
2.0 i	DA0G, EA0G, BA0/G	E	1998	F3R	A			11/95 ▸ 02/99	7700109641	**820179**	89	Y
1.9 dTi	DA0N	D	1870	F9Q	M		☞4	11/95 ▸ 06/97	7700872554	**820025**	89	Y
1.9 D,1.9 dT,1.9 dTi	DA0N, BA0/A/N/U/Y, SA0/AY	D	1870	F8Q, F9Q	M			11/95 ▸ 02/99	7700109641	**820179**	89	Y
1.9 D,1.9 dT,1.9 dTi	DA0N, BA0/8/9/A/K/N/U/Y SA0/9/A/U/Y	D	1870	F8Q, F9Q	M			11/95 ▸ 02/99	7700872314	**820008**	89	Y
1.9 dTi	DA0N	D	1870	F9Q	A		☞4	11/95 ▸ 06/97	7700872554	**820025**	89	Y

Mégane (98>)

1.4 i,1.4 i 16V	DA0W, BA0/V/W, EA1H, EA0D/W, KA0/D/V/W, KA1/0/H	E	1390	K4J, E7J	M		☞4	02/99 ▸	7700872554	**820025**	89	Y
1.6 i,1.6 i 16V	DA04, BA0/4/F, EA1J, EA04/B, KA0/4/B/F, KA1/1/J	E	1598	K4M, K7M	M		☞4	10/98 ▸	7700872554	**820025**	89	Y
1.6 i,1.6 i 16V	DA04, EA0B, BA0/4/F, KA11 KA0/4/B	E	1598	K4M, K7M	A		☞4	02/99 ▸	7700872554	**820025**	89	Y
1.9 dCi	KA05	D	1870	F9Q	A			06/00 ▸	8200074346	**820527**	89	Y
1.9 dTi	KA1U	D	1870	F9Q	M			02/01 ▸	8200074346	**820527**	89	Y
1.8 i 16V	BA1/2/A/M/R, KA1/2/A/R	E	1783	F4P	M		☞4	10/99 ▸	7700872554	**820025**	89	Y
2.0 i 16V,2.0 ide 16V	BA1/D, DA0/3/C/P, DA1/3/S EA0/3/C/P, EA1/3/S	E	1998	F5R, F4R	M		☞4	02/99 ▸	7700872554	**820025**	89	Y
2.0 i 16V	DA0H	E	1998	F7R	M			02/99 ▸ 09/02	7700872314	**820008**	89	Y
1.9 d,1.9 dCi,1.9 dTi	BA0/5/N/R, DA0/5/N, KA0/5 J/N, SA0/5/N/R	D	1870	F9Q, F8Q	M			02/99 ▸	7700872314	**820008**	89	Y
1.9 d,1.9 dCi,1.9 dTi	KA0/5/J/N	D	1870	F8Q, F9Q	M			02/99 ▸	7700109641	**820179**	89	Y
1.9 dTi	DA0N, KA0N, BA0/N	D	1870	F9Q	A			02/99 ▸	7700872314	**820008**	89	Y
1.9 dTi	KA0N	D	1870	F9Q	A			02/99 ▸	7700109641	**820179**	89	Y

Mégane Classic (96>99)

1.4 i	LA0/E/V	E	1390	E7J	M		☞4	09/96 ▸ 02/99	7700872554	**820025**	89	Y
1.6 e	LA1C, LA0/F/L/S	E	1598	K7M	M		☞4	09/96 ▸ 02/99	7700872554	**820025**	89	Y
1.6 e	LA0F	E	1598	K7M	A		☞4	09/96 ▸ 02/99	7700872554	**820025**	89	Y
2.0 i	LA0/7/G	E	1998	F3R	M			09/96 ▸ 02/99	7701474249	**820179**	89	Y
2.0 i	LA0/7/G	E	1998	F3R	A			09/96 ▸ 02/99	7701474249	**820179**	89	Y
2.0 i ▸ 980202	LA0/7/G	E	1998	F3R	M			09/96 ▸ 02/98	7700872314	**820008**	89	Y
2.0 i ▸ 980202	LA0/7/G	E	1998	F3R	A			09/96 ▸ 02/98	7700872314	**820008**	89	Y
1.9 D,1.9 dT,1.9 dTi 980202 ▸	LA1U, LA0/8/A/K/N/R/U/Y	D	1870	F9Q, F8Q	M			02/98 ▸ 02/99	7701474249	**820179**	89	Y
1.9 dTi	LA0N	D	1870	F9Q	A			02/98 ▸ 02/99	7701474249	**820179**	89	Y
1.9 D,1.9 dT,1.9 dTi ▸ 980202	LA1U, LA0/8/A/K/N/R/U/Y	D	1870	F8Q, F9Q	M			09/96 ▸ 02/98	7700872314	**820008**	89	Y
1.9 dTi ▸ 980202	LA0N	D	1870	F9Q	A			04/97 ▸ 02/98	7700872314	**820008**	89	Y

Mégane Classic (99>2002)

1.4 i 16V	LA10, LA0/D/W	E	1390	K4J	M		☞4	03/99 ▸ 08/02	7700872554	**820025**	89	Y
1.6 i 16V	LA0/0/4/B, LA1/1/J/K	E	1598	K4M	M		☞4	03/99 ▸ 08/02	7700872554	**820025**	89	Y
1.6 i 16V	LA0/4/B, LA1/1/J	E	1598	K4M	A		☞4	03/99 ▸ 08/02	7700872554	**820025**	89	Y
1.8 i 16V	LA1/2/A/M/R	E	1783	F4P	M		☞4	03/01 ▸ 08/02	7700872554	**820025**	89	Y
1.9 dCi,1.9 dTi	LA1U, LA0/1/5	D	1870	F9Q	M			03/01 ▸ 08/02	7701474249	**820179**	89	Y
1.9 dCi	LA05	D	1870	F9Q	A			03/01 ▸ 08/02	7701474249	**820179**	89	Y

Mégane II

1.6 i 16V	KM0Y, LM0Y, BM0/Y	F	1598	K4M	M		☞4	09/02 ▸	7700872554	**820025**	89	Y

• **New** Nouveau **Nuevo** Novo **Nuovo** Nieuw **Neu** Yeni Новый Nou

			cc			AC			OE	Valeo	(°)C	
RENAULT (.../...)												
Mégane II (.../...)												
1.4 i 16V	BM1A, BM0/8/B/H, CM0/8/B H, KM0/B/H, LM1A, LM0/8/B H	E	1390	K4J	M		☞4	09/02 ▸	7700872554	**820025**	89	Y
1.6 i 16V	BM1B, BM0/C/J, CM1B, CM0 C/J, EM1B, EM0/C/J, KM1B KM0/C/J, LM1B, LM0/C/J	E	1598	K4M	M		☞4	09/02 ▸	7700872554	**820025**	89	Y
1.6 i 16V ▸050117	BM1B, BM0/C/J, EM1B, EM0 C/J, KM1B, KM0/C/J, LM1B LM0/C/J	E	1598	K4M	A		☞4	09/02 ▸ 01/05	7700872554	**820025**	89	Y
2.0 i 16V,2.0 i Turbo 16V	BM0/5/M/U/W, BM1/1/M/N/T U/V, CM0/5/M/U/W, CM1/M/N U, EM0/5/U/W, EM1/N/T/U KM0/5/U, KM1/M/N/U, LM0 5/U, LM1/M/N/U	E	1998	F4R	M		☞4	09/02 ▸	7700872554	**820025**	89	Y
1.5 dCi	CM0F, GM0F, BM0/F/T, KM0 F/T, SM0F, LM0/F/T	D	1461	K9K	M		☞4	09/02 ▸	8200248531	**820537**	89	Y
1.9 dCi	CM0G, EM0G, KM0G, BM0/G LM1G, LM0/0/G	D	1870	F9Q	M		☞4	09/02 ▸	8200112054	**820536**	89	Y
Mégane Scénic (96>99)												
1.4 i,1.4 i 16V	JA0/E/W	E	1390	E7J, K4J	M		☞4	10/96 ▸ 09/99	7700872554	**820025**	89	Y
1.6 i	JA0/F/L	E	1598	K7M	M		☞4	10/96 ▸ 09/99	7700872554	**820025**	89	Y
1.6 i	JA0F	E	1598	K7M	A		☞4	10/96 ▸ 09/99	7700872554	**820025**	89	Y
2.0 i	JA0G	E	1998	F3R	M			10/96 ▸ 09/99	7700109641	**820179**	89	Y
2.0 i	JA0G	E	1998	F3R	M			10/96 ▸ 09/99	7700872314	**820008**	89	Y
2.0 i	JA0G	E	1998	F3R	A			10/96 ▸ 09/99	7700872314	**820008**	89	Y
2.0 i	JA0G	E	1998	F3R	A			10/96 ▸ 09/99	7700109641	**820179**	89	Y
1.9 D,1.9 dT,1.9 dTi	FA0/J/Y, JA0/J/N	D	1870	F8Q, F9Q	M			10/96 ▸ 09/99	7700109641	**820179**	89	Y
1.9 D,1.9 dT,1.9 dTi	FA0/J/Y, JA0/J/K/N/Y	D	1870	F8Q, F9Q	M			10/96 ▸ 09/99	7700872314	**820008**	89	Y
Mégane Scénic (99>2003)												
1.4 i 16V	JA0/D, JA1/0/H	E	1390	K4J	M		☞4	09/99 ▸	7700872554	**820025**	89	Y
1.6 i 16V	JA0/B, JA1/1/J	E	1598	K4M	M		☞4	09/99 ▸	7700872554	**820025**	89	Y
1.6 i 16V	JA0/B, JA1/1/J	E	1598	K4M	A		☞4	09/99 ▸	7700872554	**820025**	89	Y
1.8 i 16V	JA1/2/A/M/R	E	1783	F4P	M		☞4	09/99 ▸	7700872554	**820025**	89	Y
2.0 i 16V	JA0/C, JA1/3/B/L/S	E	1998	F4R	M		☞4	09/99 ▸	7700872554	**820025**	89	Y
2.0 i 16V	JA0/C, JA1/3/L/S	E	1998	F4R	A		☞4	09/99 ▸	7700872554	**820025**	89	Y
2.0 i 16V ▸000529	JA1D	E	1998	F4R	M			01/00 ▸ 05/00	7701474248	**820179**	89	Y
2.0 i 16V 000529 ▸001211	JA1D	E	1998	F4R	M			05/00 ▸ 12/00	7700872314	**820008**	89	Y
1.9 dCi,1.9 dTi ▸000529	JA0/1/5/N, JA1/F/U	D	1870	F9Q	M			09/99 ▸ 05/00	7701474248	**820179**	89	Y
1.9 dTi ▸000529	JA0N	D	1870	F9Q	A			09/99 ▸ 05/00	7701474248	**820179**	89	Y
1.9 dCi,1.9 dTi 000529 ▸001211	JA0/1/5/N, JA1/F/U	D	1870	F9Q	M			05/00 ▸ 12/00	7700872314	**820008**	89	Y
1.9 dCi,1.9 dTi 000529 ▸001211	JA0/5/N	D	1870	F9Q	A			05/00 ▸ 12/00	7700872314	**820008**	89	Y
Modus (2004>2007)												
1.2 i 16V	FP0/K, JP0/C/K	E	1149	D4F	M			09/04 ▸	7700110716	**820138**	89	Y
1.5 dCi	FP0/D/E, JP0/D/E/F/G	D	1461	K9K	M		☞4	09/04 ▸	8200248531	**820537**	89	Y
Rodeo												
0.8	ACL1	E	845	800	M		☞10	1970 ▸ 1981	7701348376	**819922**	83	N
Safrane												
2.0 i 16V	B54L	E	1948	N7Q	M		☞8	09/96 ▸ 11/00	7439180811	**820040**	90	Y
2.0 i 16V	B54L	E	1948	N7Q	A		☞8	09/96 ▸ 04/00	7439180811	**820040**	90	Y
2.5 i 20V	B54F	E	2435	N7U	M		☞8	09/96 ▸ 11/00	7439180811	**820040**	90	Y
2.5 i 20V	B54F	E	2435	N7U	A		☞8	09/96 ▸ 07/99	7439180811	**820040**	90	Y
3.0 i	B54N	E	2946	L7X	A			12/98 ▸ 11/00	9617028380	**820131**	82	N

• **New** Nouveau **Nuevo** Novo **Nuovo** Nieuw **Neu** Yeni Новый Nou

Type Ctr.		cc		AC			OE	Valeo	(°)C	
RENAULT (.../...)										
Safrane (.../...)										
2.2 TD *B54G*	D	2188	G8T	M		☞4	09/96 ▸ 11/00	7700868274	**820047**	83	Y
Scénic										
1.9 dCi,1.9 dTi *JA05, JA0N* 001211 ▸	D	1870	F9Q	A			12/00 ▸	8200074346	**820527**	89	Y
1.9 dCi,1.9 dTi *JA0N, JA05, JA1U, JA1F* 001211 ▸ *JA01*	D	1870	F9Q	M			12/00 ▸	8200074346	**820527**	89	Y
2.0 i 16V *JA1D* 001211 ▸	E	1998	F4R	M			12/00 ▸	8200074346	**820527**	89	Y
Scénic II										
1.6 i GPL 16V *JM0Y* ▸050117	F	1598	K4M	M		☞4	05/03 ▸ 01/05	7700872554	**820025**	89	Y
1.4 i 16V *JM1A, JM0/B/H* ▸050117	E	1390	K4J	M		☞4	05/03 ▸ 01/05	7700872554	**820025**	89	Y
1.6 i 16V *JM0/B/C/J, JM1/B/C* ▸050117	E	1598	K4M	M		☞4	05/03 ▸ 01/05	7700872554	**820025**	89	Y
1.6 i 16V *JM1B, JM0/C/J* ▸050117	E	1598	K4M	A		☞4	05/03 ▸ 01/05	7700872554	**820025**	89	Y
2.0 i 16V,2.0 i Turbo 16V *JM0/5/U/W, JM1/N/T/U*	E	1998	F4R	M		☞4	05/03 ▸	7700872554	**820025**	89	Y
1.5 dCi *JM0/F/T*	D	1461	K9K	M		☞4	05/03 ▸	8200248531	**820537**	89	Y
1.9 dCi *JM0/G/L, JM1/2/4/5/7/D/G*	D	1870	F9Q	M		☞4	05/03 ▸	8200112054	**820536**	89	Y
Spider										
2.0 i 16V *EF0H*	E	1998	F7R	M			01/96 ▸	7700872314	**820008**	89	Y
Thalia										
1.4 i,1.4 i 16V *LB0/B/P*	E	1390	K7J, K4J	M		☞4	01/01 ▸	7700872554	**820025**	89	Y
1.6 i 16V *LB1V*	E	1598	K4M	M		☞4	01/01 ▸	7700872554	**820025**	89	Y
1.5 dCi *LB07*	D	1461	K9K	M		☞4	01/01 ▸	8200374994	**820537**	89	Y
Twingo I (93>98)										
1.2 i *S066, C06/6/7*	E	1149	D7F	M			07/96 ▸ 08/98	7700868980	**820048**	89	N
1.2 i *S066, C06/6/7*	E	1149	D7F	A			07/96 ▸ 08/98	7700868980	**820048**	89	N
Twingo II (98>2007)										
1.2 i GPL *C066, S066*	G	1149	D7F	M			10/98 ▸	7700110716	**820138**	89	Y
1.2 i,1.2 i 16V *C06/6/8/C/D/G/K, S06/6/8 C/K*	E	1149	D4F, D7F	M			09/98 ▸	7700110716	**820138**	89	Y
1.2 i *C066*	E	1149	D7F	A			09/98 ▸	7700110716	**820138**	89	Y
Vel Satis (2002>2005)										
2.0 i Turbo 16V *BJ0/K/P*	E	1998	F4R	M		☞4	01/02 ▸	7700872554	**820025**	89	Y
2.0 i Turbo 16V *BJ0/K/P*	E	1998	F4R	A		☞4	01/02 ▸	7700872554	**820025**	89	Y
3.5 i V6 24V *BJ0/U/V*	E	3498	V4Y	A			01/02 ▸	7701474510	**820596**	82	N
3.0 dCi V6 24V *BJ0J* 030303 ▸	D	2958	P9X	A		☞4,9	03/03 ▸ 01/05	7701057805	**820513**	82	Y
Vel Satis (2005>)										
2.0 i Turbo 16V *BJ0W*	E	1998	F4R	M		☞4	02/05 ▸	7700872554	**820025**	89	Y
2.0 i Turbo 16V *BJ0W*	E	1998	F4R	A		☞4	02/05 ▸	7700872554	**820025**	89	Y
3.5 i V6 24V *BJ0V*	E	3498	V4Y	A			02/05 ▸	7701474510	**820596**	82	N
3.0 dCi V6 24V *BJ0J*	D	2958	P9X	A		☞4,9	02/05 ▸	7701057805	**820513**	82	Y
RENAULT										
Estafette										
1.3 *R213*	E	1289	810	M		☞10	09/68 ▸ 1980	7701348376	**819922**	83	N
1.3 *R213*	E	1289	810	M		☞10	09/68 ▸ 1980	7701348374	**819923**	86	N
Express (85>91)										
1.0 *F400*	E	956	C1C	M		☞10	09/85 ▸ 08/91	7701348376	**819922**	83	N
1.1 *F40/1/H*	E	1108	C1E	M		☞10	09/85 ▸ 08/91	7701348376	**819922**	83	N

• **New** Nouveau **Nuevo** Novo **Nuovo** Nieuw **Neu** Yeni Новый Nou

			Type Ctr.		CC			AC			OE	Valeo	(°)C	
RENAULT (.../...)														
Express (85>91) (.../...)														
1.4	*F40/2/M*	E		1397	C1J, C2J	M		☞10	09/85 ▸ 08/91	7701348376	**819922**	83	N
1.6 D	*F404*	D		1595	F8M	M			09/85 ▸ 08/91	7700872314	**820008**	89	Y
Express (91>)														
1.1	*F40/1/T*	E		1108	C1E	M		☞10	09/91 ▸ 08/97	7701348376	**819922**	83	N
1.2	*F40F*	E		1237	C1G	M		☞10	09/91 ▸ 08/94	7701348376	**819922**	83	N
1.2 i	*F406*	E		1239	C3G	M		☞10	07/93 ▸ 08/97	7701348376	**819922**	83	N
1.4,1.4 i	*F40/A/D/S/U/V/Y*	E		1390	E7J, E6J	M			09/91 ▸ 08/97	7700858802	**820009**	91	Y
1.4 i	*F40/S/U*	E		1390	E7J	A			09/91 ▸ 08/97	7700858802	**820009**	91	Y
1.6 D	*F404*	D		1595	F8M	M			09/91 ▸ 08/94	7700872314	**820008**	89	Y
1.9 D	*F40/E/N/P/R*	D		1870	F8Q	M			09/91 ▸ 08/97	7700872314	**820008**	89	Y
Extra (85>91)														
1.6 D	*F404*	D		1595	F8M	M			09/85 ▸ 08/91	7700872314	**820008**	89	Y
Extra (91>97)														
1.2	*F40F*	E		1237	C1G	M		☞10	09/91 ▸ 08/94	7701348376	**819922**	83	N
1.4,1.4 i	*F40/A/U*	E		1390	E6J, E7J	M			09/91 ▸ 08/97	7700858802	**820009**	91	Y
1.6 D	*F404*	D		1595	F8M	M			09/91 ▸ 08/94	7700872314	**820008**	89	Y
1.9 D	*F40/E/N/R*	D		1870	F8Q	M			09/91 ▸ 08/97	7700872314	**820008**	89	Y
Kangoo Extra (98>2003)														
1.2 i	*FC0A*	E		1149	D7F	M			01/98 ▸	7700868980	**820048**	89	N
1.4 i	*FC0C*	E		1390	E7J	M		☞4	01/98 ▸	7700872554	**820025**	89	Y
1.9 D	*FC0E*	D		1870	F8Q	M			01/98 ▸	7700872314	**820008**	89	Y
Kangoo (97>2003)														
1.2 i ▸ 980630	*FC0A, KC0A*	E		1149	D7F	M			09/97 ▸	7700868980	**820048**	89	N
1.4 i	*FC0/C/H, KC0/C/H*	E		1390	E7J	M		☞4	09/97 ▸	7700872554	**820025**	89	Y
1.4 i	*KC0H*	E		1390	E7J	A		☞4	10/99 ▸	7700872554	**820025**	89	Y
1.6 i,1.6 i 16V	*FC0/D/P/S, KC0/D/P/S*	E		1598	K4M, K7M	M		☞4	12/99 ▸	7700872554	**820025**	89	Y
1.9 D 980202 ▸ 000529	*FC0/D/E, KC0/D/E*	D		1870	F8Q	M			02/98 ▸	7701474249	**820179**	89	Y
1.9 DTi,1.9 dCi ▸ 000529	*FC0/U, KC0/U/V*	D		1870	F9Q	M			12/99 ▸	7701474248	**820179**	89	Y
1.9 D,1.9 DTi 000529 ▸ 980202	*FC0/D/E/U, KC0/D/E/U*	D		1870	F8Q, F9Q	M			09/97 ▸	7700872314	**820008**	89	Y
1.9 dTi	*FC0V*	D		1870	F9Q	M			01/02 ▸	8200074346	**820527**	89	Y
Kangoo (2003>)														
1.2 i,1.2 i GPL	*FC0A, KC0A*	G		1149	D7F	M			03/03 ▸	7700110716	**820138**	89	Y
1.2 i	*FC0A, KC0A*	E		1149	D7F	M			03/03 ▸	7700868980	**820048**	89	N
1.2 i,1.2 i 16V	*FC0/1/5/A/F/T/W, KC0/1/5 A/F/K/T/W*	E		1149	D7F, D4F	M			03/03 ▸	7700110716	**820138**	89	Y
1.4 i	*FC0/B/M, KC0/B/M*	E		1390	K7J	M		☞4	03/03 ▸	7700872554	**820025**	89	Y
1.4 i	*FC0/B/M, KC0/B/M*	E		1390	K7J	A		☞4	03/03 ▸	7700872554	**820025**	89	Y
1.6 i 16V	*FC1N, FC0/L/P/S, KC1N KC0/L/P/S*	E		1598	K4M	M		☞4	03/03 ▸	7700872554	**820025**	89	Y
1.6 i 16V	*FC1N, FC0/L/S, KC1N, KC0 L/S*	E		1598	K4M	A		☞4	03/03 ▸	7700872554	**820025**	89	Y
1.5 dCi	*FC0/7/8/9, FC1/R/S, KC0/7 8/9, KC1/R/S*	D		1461	K9K	M		☞4	03/03 ▸	8200374994	**820537**	89	Y
1.9 D,1.9 dCi,1.9 dTi	*KC0V, FC0J, KC0N, FC0V FC0N, KC0J*	D		1870	F8Q,F9Q	M			03/03 ▸	8200074346	**820527**	89	Y
Master (80>89)														
2.0	*FB30, FC30*	E		1995	J5R	M		☞10	08/80 ▸ 02/89	7701349415	**819891**	88	Y
2.1 D	*FB30*	D		2068	J8S	M			08/80 ▸ 02/89	7700665226	**819937**	81	Y
Master (89>94)														
2.0	*QH92, QJ72, QJ92, R8D2, RC92, RF12 RH12, RH52, RH92, RJ12, RJ22, RJ52 RJ92, RL92, QH7/2*	E		1995	J5R	M		☞10	03/89 ▸ 09/94	7701349415	**819891**	88	Y

• **New** Nouveau **Nuevo** Novo **Nuovo** Nieuw **Neu** Yeni Новый Nou

		Type Ctr.		cc		AC				OE	Valeo	(°)C	
RENAULT (.../...)													
Master (89>94) (.../...)													
2.1 D	*RF13*	D	2068	J8S	M			03/89 ▸ 09/94	7700665226	**819937**	81	Y
2.5 D,2.5 TD	*R8D/5/6, RH1/5/6, RH5/5/6 RH9/5/6, RJ1/5/6, RJ2/5 6, RJ5/5/6, RJ9/5/6*	D	2499	S8U, S9U	M			03/89 ▸ 09/94	5000816924	**820023**	76	Y
Master (94>97)													
2.2 i	*RC7E, RC9E, RD9E, RF1E, RH1E, RH2E RH5E, RH9E, RJ1E, RJ2E, RJ5E, RJ9E RL7E, RL9E, R8D/E*	E	2165	J7T	M		☞10	10/94 ▸ 09/97	7701349415	**819891**	88	Y
2.5 D,2.5 TD	*R8D/G, RC7/G/H, RC9/G/H/J RD8/H/J, RF1G, RD9/G/H RH1/G/H/J, RH2/G/H, RH5 G/H, RH9/G/H/J, RJ1/G/H/J RJ2/G/H/J, RJ5/G/H/J RJ9/G/H/J, RL7/H/J, RL9 G/H/J*	D	2499	S9U, S8U	M			10/94 ▸ 09/97	5000816924	**820023**	76	Y
Master (97>2003)													
1.9 dTi	*JD0L, JD1L, FD0/L*	D	1870	F9Q	M			02/01 ▸	7701474248	**820179**	89	Y
1.9 dCi	*FD0P*	D	1870	F9Q	M			02/01 ▸	8200074346	**820527**	89	Y
Master (2003>)													
1.9 dCi	*JD0P, FD0P*	D	1870	F9Q	M			10/03 ▸	8200074349	**820556**	83	N
Rapid (85>91)													
1.0	*F400*	E	956	C1C	M		☞10	09/85 ▸ 08/91	7701348376	**819922**	83	N
1.1	*F40/1/H*	E	1108	C1E	M		☞10	09/85 ▸ 08/91	7701348376	**819922**	83	N
1.4	*F402*	E	1397	C1J	M		☞10	09/85 ▸ 08/91	7701348376	**819922**	83	N
1.6 D	*F404*	D	1595	F8M	M			09/85 ▸ 08/91	7700872314	**820008**	89	Y
Trafic (80>89)													
1.4 GPL	*T1X0*	G	1397	847	M		☞10	07/80 ▸ 02/89	7701348374	**819923**	86	N
1.4 GPL	*T1X0*	G	1397	847	M		☞10	07/80 ▸ 02/89	7701348375	**819921**	75	N
1.4	*T1X0, T5X0, P3X/0*	E	1397	847	M		☞10	07/80 ▸ 02/89	7701348375	**819921**	75	N
1.4	*T1X0, T5X0*	E	1397	847	M		☞10	07/80 ▸ 02/89	7701348374	**819923**	86	N
1.6,1.6 GPL	*PAY1, T3V1, T3X1, T4V1 T4X1, T5W1, T5X1, T6W1 T9X1, TAX1, TAZ1, V5W1 V9X1, P3X/1*	E	1647	A1M, 841	M		☞10	07/80 ▸ 02/89	7701348375	**819921**	75	N
1.6	*T3X1, T5X1, T9X1, TAX1, TAZ1, T3V/1*	E	1647	A1M	A		☞10	07/80 ▸ 1986	7701348375	**819921**	75	N
1.7	*T2W8, T3X8, T4V8, T4X8, T5W8, T5X8 TBZ8, P3X/8*	E	1721	F1N	M			07/80 ▸ 02/89	7700872314	**820008**	89	Y
2.0	*PCX2, PCY2, T3V3, T5X2, T7W2, TBX2 TBZ2, TE12, TE22, TE92, V2W2, V4X2 V9X2, PAY/2*	E	1995	J5R	M		☞10	07/80 ▸ 02/89	7701349415	**819891**	88	Y
2.0	*T5X2, TBX2*	E	1995	J5R	A		☞10	07/80 ▸ 02/89	7701349415	**819891**	88	Y
2.1 D	*PAY3, PCY3, T2W3, T3X3, T4V3, T4X3 T5W3, T5X3, T6W3, T7W3, T9X3, TAX3 TAZ3, TBX3, TBZ3, V2W3, V4X3, V5W3 V9X3, P3X/3*	D	2068	852	M			07/80 ▸ 02/89	7700697157	**819898**	88	Y
2.1 D	*PAY3, PCY3, T2W3, T3X3, T4V3, T4X3 T5W3, T5X3, T6W3, T7W3, T9X3, TAX3 TAZ3, TBX3, TBZ3, V2W3, V4X3, V5W3 V9X3, P3X/3*	D	2068	852	M			07/80 ▸ 02/89	7700665226	**819937**	81	Y
Trafic (89>94)													
1.4	*T110, T120*	E	1397	C1J	M		☞10	03/89 ▸ 06/91	7701348374	**819923**	86	N
1.4	*T110, T120*	E	1397	C1J	M		☞10	03/89 ▸ 06/91	7701348375	**819921**	75	N
1.7	*P358, T118, T128, T2B8, T318, T328 T358, T418, T428, T558, T5B8, P31 8*	E	1721	F1N	M			03/89 ▸ 09/94	7700872314	**820008**	89	Y

• **New** Nouveau **Nuevo** Novo **Nuovo** Nieuw **Neu** Yeni Новый Nou

		E	1995	J5R	M		☞10	03/89 ▸ 09/94	7701349415	**819891**	88	Y
2.0	*PC92, PCG2, T2B2, T552, T7B2, TB12 TB22, TB42, TB52, TB62, TB92, TE92 V312, V412, V422, V492, V5B2, PC8 2*											
2.2	*T35A, T5BA, T7BA, T7CA, TB1A, TB2A TB6A, TB9A, TC9A, TE1A, TE2A, TE9A V31A, V41A, V42A, V49A, V5BA, T31 A*	E	2165	J7T	M		☞10	03/89 ▸ 09/94	7701349415	**819891**	88	Y
2.1 D	*P353, PC83, PC93, PCG3, T113, T123 T2B3, T313, T323, T333, T353, T413 T423, T433, T553, T5B3, T7B3, TB13 TB23, TB33, TB43, TB53, TB63, TB93 V313, V423, V5B3, P31/3*	D	2068	J8S, 852	M			03/89 ▸ 09/94	7700665226	**819937**	81	Y
2.1 D	*P353, PC83, PC93, PCG3, T113, T123 T2B3, T313, T323, T333, T353, T413 T423, T433, T553, T5B3, T7B3, TB13 TB23, TB33, TB43, TB53, TB63, TB93 V313, V423, V5B3, P31/3*	D	2068	J8S, 852	M			03/89 ▸ 09/94	7700697157	**819898**	88	Y
Trafic (95>97)												
2.2 i	*T12E, T2BE, T31E, T32E, T35E, T41E T42E, T55E, T5BE, T7CE, TB1E, TB2E TB4E, TB5E, TB6E, TB9E, TC9E, TMBE V31E, V42E, V49E, V5BE, T11/E*	E	2165	J7T	M		☞10	10/94 ▸ 08/97	7701349415	**819891**	88	Y
2.1 D	*PC9F, PCGF, T11F, T12F, T2BF, T31F T32F, T33F, T35F, T41F, T42F, T43F T55F, T5BF, TMBF, PC8/F*	D	2068	J8S	M			10/94 ▸ 08/97	7700665226	**819937**	81	Y
2.5 D	*TB1G, TB2G, TB3G, TB4G, TB5G, TB6G TB9G, TC7G, TC9G, TG1G, TH1G, TJ1G V31G, V42G, V49G, V5BG, T55/G*	D	2499	S8U	M			10/94 ▸ 08/97	5000816924	**820023**	76	Y
Trafic (97>2001)												
1.9 D	*TF1J, TF2J, TF3J, THBJ, T55/J* ▸ 980202	D	1870	F8Q	M			02/98 ▸ 08/98	7700109641	**820179**	89	Y
1.9 D	*T55/J/L, TF1/J/L, TF2/J/L, TF3/J/L* ▸ 980202 *THB/J/L*	D	1870	F8Q	M			09/97 ▸ 03/01	7700872314	**820008**	89	Y
2.5 D	*T7BG, TB2G, TB9G, TC9M, T55/G/M TCJ/G/M, TF1/G/M, TF2/G/M, TF3/G/M V31/G/M, V5B/G/M*	D	2499	S8U	M			09/97 ▸ 03/01	5000816924	**820023**	76	Y
Trafic (2001>)												
2.0 i 16V	*FL0A, JL0A, EL0/A*	E	1998	F4R	M		☞4	04/01 ▸	7700872554	**820025**	89	Y
1.9 dCi	*FL0C, JL0B, JL0C, FL0B EL0C*	D	1870	F9Q	M			04/01 ▸	8200074346	**820527**	89	Y
ROVER												
25 (99>2003)												
1.1 i 16V		E	1119	11K4F4	M			03/01 ▸ 07/04	PEL10016	**820056**	88	Y
1.4 i 16V		E	1396	14K4F4	M			12/99 ▸	GTS301	**820056**	88	Y
1.6 i 16V		E	1588	16K4F4	A			12/99 ▸	GTS301	**820056**	88	Y
1.6 i 16V		E	1588	16K4F4	M			12/99 ▸ 07/04	PEL10016	**820056**	88	Y
1.8 i 16V		E	1796	18K16,18K4	A			12/99 ▸	GTS301	**820056**	88	Y
1.8 i 16V		E	1796	18K16	M			12/99 ▸	GTS301	**820056**	88	Y
2.0 D		D	1996	20T2N	M			12/99 ▸ 07/04	PEM101020	●**820955**	92	N
25 (2004>)												
1.1 i 16V		E	1119	11K4F4	M			08/04 ▸ 04/05	PEL10016	**820056**	88	Y
1.4 i 16V		E	1396	14K4F4	M			08/04 ▸ 04/05	PEL10016	**820056**	88	Y
1.6 i 16V		E	1588	16K4F4	A			08/04 ▸ 04/05	PEL10016	**820056**	88	Y
1.6 i 16V		E	1588	16K4F4	M			08/04 ▸ 04/05	PEL10016	**820056**	88	Y
1.8 i 16V		E	1796	18K4	A			08/04 ▸ 04/05	PEL10016	**820056**	88	Y

• **New** Nouveau **Nuevo** Novo **Nuovo** Nieuw **Neu** Yeni Новый Nou

		Type Ctr.		CC		AC		2 3	OE	Valeo	(°)C	
ROVER (.../...)												
25 (2004>) (.../...)												
2.0 Di		D	1994	20T2N	M			08/04 ▸ 04/05	PEM101020	●820955	92	N
45 (2000>2004)												
1.4 i 16V	RTZL, RTCW, RTSW, RTCL RTMW, RTZW, RTSL, RTML	E	1396	14K4F4	M			01/00 ▸ 04/04	PEL10016	820056	88	Y
1.6 i 16V	RTZL, RTCL, RTZW, RTCW RTSL, RTSW	E	1589	16K4F4	M			01/00 ▸ 04/04	PEL10016	820056	88	Y
1.8 i 16V	RTSW, RTSL, RTCL, RTZW RTZL, RTCW	E	1796	18K4F	A			01/00 ▸	GTS301	820056	88	Y
1.8 i 16V	RTSL, RTZW, RTCW, RTCL RTSW, RTZL	E	1796	18K4F	M			01/00 ▸	GTS301	820056	88	Y
2.0 Di,2.0 iDT	RT/, RTC/L/W, RTM/L/W RTS/L/W, RTZ/L/W	D	1994	20T2N	M			01/00 ▸ 05/04	PEM101020	●820955	92	N
45 (2004>)												
1.4 i 16V	RTZW, RTCL, RTCW, RTMW RTZL, RTSW	E	1396	14K4F4	M			06/04 ▸ 04/05	PEL10016	820056	88	Y
1.6 i 16V	RTCW, RTSW, RTZW, RTZL RTCL, RTSL	E	1589	16K4F4	M			06/04 ▸ 04/05	PEL10016	820056	88	Y
1.8 i 16V	RTCW, RTCL, RTZL, RTSL RTSW, RTZW	E	1796	18K4F	A			06/04 ▸ 04/05	PEL10016	820056	88	Y
1.8 i 16V	RTSL, RTZL, RTCL, RTCW RTSW, RTZW	E	1796	18K4F	M			06/04 ▸ 04/05	PEL10016	820056	88	Y
2.0 Di	RTMW, RTSW, RTC/L	D	1994	20T2N	M			06/04 ▸ 04/05	PEM101020	●820955	92	N
2.0 D	RTC/L/W, RTM/L/W, RTS/L/W, RTZ/L/W	D	1996	20T2N	M			06/04 ▸ 04/05	PEM101020	●820955	92	N
75												
1.8 i 16V		E	1796	18K4F	A			02/99 ▸	GTS301	820056	88	Y
1.8 i 16V		E	1796	18K4F	M			02/99 ▸	GTS301	820056	88	Y
2.0 i V6 24V	R40	E	1997	20K6F	M			02/99 ▸	GTS301	820056	88	Y
100												
1.1,1.1 i	XPD/N, XPF/N/W, XPMN, XPH N/W, XPY/N/W	E	1129	11K2A, 11K2B, 11K2D	M			09/90 ▸	GTS298	820058	88	Y
1.1,1.1 i	XPHN, XPYW, XPFW, XPYN XPHW, XPDN, XPMN, XPFN	E	1129	11K2A,11K2B,11K2D	M			09/90 ▸	GTS301	820056	88	Y
1.1 ▸ 687992	XPD/N, XPF/N/W, XPMN, XPH/N/W, XPY N/W	E	1129	11K2A, 11K2B	M			09/90 ▸	GTS282	820057	82	Y
1.4,1.4 i,1.4 i 16V 687993 ▸	XPM/N, XPWN, XPYW, XPZW XPS/N/W	E	1396	14K2A, 14K2D, 14K4C, 14K4F4 14K4D	M			09/90 ▸	GTS298	820058	88	Y
1.4 i	XPYW, XPZW	E	1396	14K2D	A			02/92 ▸	GTS298	820058	88	Y
1.4 ▸ 687992	XPM/N, XPYW, XPZW, XPS/N/W	E	1396	14K2A	M			09/90 ▸	GTS282	820057	82	Y
1.4 i	XPZW, XPYW	E	1396	14K2D	A			02/92 ▸	GTS301	820056	88	Y
1.4,1.4 i,1.4 i 16V	XPSN, XPWN, XPMN, XPSW XPYW, XPZW	E	1396	14K2A,14K2D,14K4C,14K4D 14K4F4	M			12/90 ▸ 12/92	GTS301	820056	88	Y
1.4 D	XPMW, XPYW, XPZW, XPF/N/W	D	1360	10FTO FO	M			05/92 ▸	GTS299	819897	89	Y
1.5 D	XPF/N/W, XPH/N/W, XPZ/N/W	D	1527	VJZ	M			01/95 ▸	GTS299	819897	89	Y
200 (84>90)												
213	XHSL, XHYL, XHM/L	E	1342	EV	M		☞10	06/84 ▸ 09/90	GTS275	820054	82	Y
213	XHYL	E	1342	EV	A		☞10	06/84 ▸ 09/90	GTS275	820054	82	Y
216	XHWL, XHYL, XHZL, XHS/L	E	1598	H16A, H16B, H16B-EFI	M		☞8	03/85 ▸ 09/90	GTS1106	820049	88	Y
200 (89>95)												
214 378087 ▸	XWH/N, XWSN, XWYW, XWM/B/N/W	E	1396	14K4D, 14K4F4, 14K2A, 14K4C 14K2D	M			10/89 ▸ 03/96	GTS298	820058	88	Y
214	XWMW, XWHN, XWMB, XWSN, XWSW, XWYW XWMN, XWWN, XWHW	E	1396	14K2D,14K4C,14K4D,14K4F4	M			03/92 ▸ 03/96	PEL10016	820056	88	Y
214 ▸ 378086	XWSN, XWYW, XWM/N/W	E	1396	14K4D, 14K4C, 14K2A	M			10/89 ▸	GTS282	820057	82	Y
216	XWW/B/C/N/W, XWYW, XWX/N/W	E	1590	D16A8, D16Z2, D16A7, D16A9	M		☞4,7,9	10/89 ▸ 03/96	GTS283	820076	78	Y

• **New** Nouveau **Nuevo** Novo **Nuovo** Nieuw **Neu** Yeni Новый Nou

Type Ctr.		CC		AC		2 3	OE	Valeo	(°)C	
ROVER (.../...)										
200 (89>95) (.../...)										
216 *XWYW*	E	1590	D16Z2, D16A7	A		☞4,7,9	10/89 ▸ 03/96	GTS283	**820076**	78	Y
200 (95>99)										
211 *RFHN, RFHW*	E	1113	11K2F	M			01/98 ▸ 11/99	PEL10016	**820056**	88	Y
216 *RFYW*	E	1589	16K4F4	A			10/96 ▸ 11/99	PEL10016	**820056**	88	Y
216 *RFYW, RFMW*	E	1589	16K4F4	M			11/95 ▸	GTS301	**820056**	88	Y
220 *RFWN*	E	1796	18K16	M			10/96 ▸ 11/99	GTS301	**820056**	88	Y
220 *RFH/W, RFM/M/W/Y*	D	1994	20T2R, 20T2N	M		☞8	11/95 ▸	GTS1106	**820049**	88	Y
200 Coupé/Cabriolet										
200 *XWWC, XWMB*	E	1589	16K4F4	A			03/96 ▸ 1999	PEL10016	**820056**	88	Y
200 *XWWC, XWMB*	E	1589	16K4F4	M			03/96 ▸ 1999	PEL10016	**820056**	88	Y
200 *199X, XWWC*	E	1796	18K4K	M			03/96 ▸	GTS301	**820056**	88	Y
400 (90>95)										
414 *XWSL, XWYL, XWM/L* ▸ 378086	E	1396	14K4C, 14K4D	M			03/90 ▸ 03/91	GTS282	**820057**	82	Y
414 *XWSL, XWYL, XWM/L* 378087 ▸ 455693	E	1396	14K4D, 14K4C	M			03/91 ▸ 09/91	GTS298	**820058**	88	Y
414 *XWML, XWSL, XWYL*	E	1396	14K4C,14K4D,14K4F4	M			09/91 ▸	GTS301	**820056**	88	Y
416 *XWSL, XWM/L, XWY/L/T, XWZ/L/T*	E	1590	D16Z2, D16A9, D16A7, D16A8	M		☞4,7,9	03/90 ▸	GTS300	**820076**	78	Y
416 *XWSL, XWYL, XWZL, XWM/L*	E	1590	D16Z2, D16A7, D16A9, D16A8	A		☞4,7,9	03/90 ▸	GTS300	**820076**	78	Y
420 *XWS/L, XWYL, XWX/L/T*	E	1994	20T4G, 20T4H, 20M4F	M		☞8	11/91 ▸	GTS1106	**820049**	88	Y
420 *XWYL, XWSL, XWXL, XWXT*	E	1994	20T4G,20T4H	M	+		10/92 ▸ 04/95	GTS302	**820077**	88	Y
418 *XWSL, XWM/L, XWZL, XWY/L/T*	D	1769	IOCV2L, ICV2L	M		☞4	11/93 ▸	GTS303	**819952**	83	Y
418 *XWML, XWSL*	D	1905	IOCU4N	M		☞4	11/93 ▸	GTS303	**819952**	83	Y
400 (95>)										
414 *RTMW, RTML, RTHW*	E	1396	14K4F4	M			05/95 ▸ 03/00	PEL10016	**820056**	88	Y
416 *RTSL, RTCW, RTMW*	E	1589	16K4F4	M	+/-		05/95 ▸	GTS301	**820056**	88	Y
416 *RTCW, RTLL*	E	1590	D16Y3E	A	+/-		05/95 ▸	GTS319	**820165**	78	Y
418 *RTC*	E	1796	18K4K	M	-		03/96 ▸ 10/97	PEL10016	**820056**	88	Y
420 *RTMW, RTCW, RTCL, RTZW, RTSW*	E	1994	20T4H	M	+		11/95 ▸ 03/00	GTS302	**820077**	88	Y
420 *RTMW, RTSW, RTZW, RTC/L/W*	E	1994	20T4H	M	-	☞8	11/95 ▸	GTS1106	**820049**	88	Y
420 *RTMW, RTSW, RTZW, RTC/W*	D	1994	20T2R, 20T2N	M	+/-	☞8	11/95 ▸	GTS1106	**820049**	88	Y
600										
618 *RHSL, RHYL, RHM/L*	E	1850	F18A3	M		☞4,7,9	03/96 ▸	GTS300	**820076**	78	Y
618 *RHSL, RHYL*	E	1850	F18A3	A		☞4,7,9	03/96 ▸	GTS300	**820076**	78	Y
620 *RHWL*	E	1994	20T4G	M	-	☞8	07/94 ▸ 06/00	GTS1106	**820049**	88	Y
620 *RHWL*	E	1994	20T4G	M	+		07/94 ▸ 06/00	GTS302	**820077**	88	Y
620 *RHSL, RHYL, RHZL, RHM/L*	E	1997	F20Z1, F20Z2	M		☞4,7,9	04/93 ▸	GTS300	**820076**	78	Y
620 *RHYL, RHZL*	E	1997	F20Z1	A		☞4,7,9	04/93 ▸	GTS300	**820076**	78	Y
623 *RHWL*	E	2259	HZ3A3	M		☞4,7,9	10/93 ▸	GTS300	**820076**	78	Y
623 *RHWL*	E	2259	HZ3A3	A		☞4,7,9	10/93 ▸	GTS300	**820076**	78	Y
620 *RHSL, RHYL, RHZL, RHM/L*	D	1994	20T2N	M			12/94 ▸ 06/00	PEM101020	●**820955**	92	N
800 (86>91)										
820 *XSH/L/W, XSS/L/W, XSY/L/W*	E	1994	M16E, M16I, 20HD01, 20M4G	M		☞8	09/86 ▸ 09/91	GTS1106	**820049**	88	Y
820 *XSH/W, XSS/L/W*	E	1994	M16I, M16E, 20HD02	A		☞8	09/86 ▸ 09/91	GTS1106	**820049**	88	Y
827 *XSWW, XSZL, XSC/W*	E	2675	C27A1, C27A2	M		☞10	09/87 ▸ 09/91	GTS285	**820053**	78	Y
827 *XSWW, XSZL, XSC/W*	E	2675	C27A2, C27A1	A		☞10	09/87 ▸ 09/91	GTS285	**820053**	78	Y
825 *XSH/L/W, XSS/L/W*	D	2498	97A	M		☞1	07/89 ▸ 09/91	GTS287	**820059**	80	Y
800 (91>98)										
820 *RSH/L/W, RSWL, RSS/L/W*	E	1994	20T4GG, 20T4H	M		☞8	10/91 ▸ 09/98	GTS1106	**820049**	88	Y
820 *RSH/L/W, RSS/L/W*	E	1994	20T4H	A		☞8	10/91 ▸ 09/98	GTS1106	**820049**	88	Y
827 *RSC/C/L, RSS/L/W*	E	2675	C27A1, C27A2	M		☞10	10/91 ▸ 12/95	GTS285	**820053**	78	Y
827 *RSC/C/L/W, RSS/L/W*	E	2675	C27A2, C27A1	A		☞10	10/91 ▸ 12/95	GTS285	**820053**	78	Y
825 *RSH/L/W, RSS/L/W*	D	2498	97A	M		☞1	10/91 ▸ 09/98	GTS287	**820059**	80	Y
Allegro										
1100 *AC2S*	E	1098	10H	M		☞10	05/73 ▸ 12/80	GTS102	**819850**	83	Y
1300 *AE4S*	E	1275	12H	M		☞10	05/73 ▸ 07/83	GTS102	**819850**	83	Y

• **New** Nouveau **Nuevo** Novo **Nuovo** Nieuw **Neu** Yeni Новый Nou

											(°)C	
ROVER (.../...)												
Allegro (.../...)												
1500,1750 *AF4S, MAFL*	E	-			M		☞8	05/73 ▸ 07/83	GTS280	**819864**	82	Y
Maestro												
1.3 *XCHW, XCMW, XCSW, XCD/W*	E	1275	12HC34, 12HA04, 12HC32 12H959, 12HA20		M		☞8	03/83 ▸ 1990	GTS1106	**820049**	88	Y
1.6 *XCSW, XCTW, XCVW, XCP/W*	E	1598	ROVE10, 16HC37, 16HB77 16HA03, 16H956, 16H		M		☞8	03/83 ▸ 04/92	GTS1106	**820049**	88	Y
1.6	E	1598	16HA01, 16HA36, 16HC38		A		☞8	10/83 ▸ 1990	GTS1106	**820049**	88	Y
2.0,2.0 i,2.0 i Turbo *XCTW*	E	1994	20HC78, 20HA50, 20HA51 20HB63		M		☞8	03/83 ▸ 09/91	GTS1106	**820049**	88	Y
2.0 D *XCGH*	D	1994	BA		M		☞8	1987 ▸ 01/95	GTS101	**819864**	82	Y
Metro												
1000 *XBFN, XBHN, XBLN, XBPN, XBA/N, XFD N/W, XFH/N/W, XFYW, XFM/N/W*	E	998	99H, 99H962P, 99H929P 99H907P		M		☞8	10/80 ▸ 09/90	GTS1106	**820049**	88	Y
1.1,1.1 i *XPDW, XPHW, XPDN, XPMN XPHN, XPMW*	E	1129	11K2A,11K2B,11K2D		M			05/90 ▸ 01/95	GTS301	**820056**	88	Y
1300,1300 Turbo *XBHN, XBRN, XBZN, XBG/N XFH/N/W, XFWN, XFXD XFYW, XFZW, XFM/N/W*	E	1275	12H907AA, 12H996AA, 12H 12H959AA, 12HD26, 12HC15 12HC14		M		☞8	02/81 ▸ 09/90	GTS1106	**820049**	88	Y
1300 *XFMN, XFSN*	E	1275	12H907AA		A		☞8	07/86 ▸ 09/90	GTS1106	**820049**	88	Y
1.4 i *XPMW, XPSW, XPMN, XPHW, XPYW, XPZW XPSN, XPHN*	E	1396	14K2D		A			02/92 ▸ 01/95	GTS301	**820056**	88	Y
1.4,1.4 i,1.4 i 16V *XPSW, XPSN, XPYW, XPMW XPZW, XPYN, XPMN, XPWN*	E	1396	14K2A,14K2B,14K2D,14K4F4		M			05/90 ▸ 01/95	PEL10016	**820056**	88	Y
Mini												
850 *XK2S*	E	848	85H, 8AH, ROVE12		M		☞8	1959 ▸ 09/82	GTS1106	**820049**	88	Y
850	E	848	8AH		A		☞8	11/67 ▸ 08/69	GTS1106	**820049**	88	Y
970	E	970	9FC		M		☞8	1963 ▸ 1965	GTS1106	**820049**	88	Y
1000 *XFNN, XL2S*	E	998	99HG31, 99H, 9F, 9FA		M		☞8	1961 ▸ 08/90	GTS1106	**820049**	88	Y
1000 *XL2S*	E	998	ROVE13, 99H, 9AG		A		☞8	11/67 ▸ 08/90	GTS1106	**820049**	88	Y
1070	E	1071	ROVE14		M		☞8	1963 ▸ 1965	GTS1106	**820049**	88	Y
1100 *XC2S*	E	1098	10H		M		☞8	10/80 ▸ 09/82	GTS1106	**820049**	88	Y
1.3,1.3 i,1275 *XNW/A, XNN/A/B, XNY/A/B*	E	1275	12A2A, 12A2D, 12A2L, 12FA 12A2E, 12H, 12A2B		M		☞8	1963 ▸	GTS1106	**820049**	88	Y
1.3 *XNW/A*	E	1275	12A2B		A		☞8	06/92 ▸	GTS1106	**820049**	88	Y
Montego												
1300 *XEM/L, XES/L, XEH/L*	E	1275	12HA37		M		☞8	05/84 ▸	GTS1106	**820049**	88	Y
1600 *XEM/L/M, XEW/L, XES/L/M*	E	1598	16HA35, 16HA35S		M		☞8	05/84 ▸	GTS1106	**820049**	88	Y
2000,2000 Turbo,2000 i *XEB/L, XEM/L/M, XES/L/M XEYL, XEW/L/M, XEZ/L/M*	E	1994	20HB69/B78, 20HA30/B43, 20HA30, 20HA 20HB43, 20HA32, 20HB63 20HD55, 20HB59		M		☞8	05/84 ▸	GTS1106	**820049**	88	Y
2000,2000 i *XEYL, XEZL*	E	1994	20HB60, 20HA30, 20HB55		A		☞8	05/84 ▸	GTS1106	**820049**	88	Y
2000 TD *XEZM, XES/L/M*	D	1994	BB		M		☞8	10/88 ▸ 12/94	GTS280	**819864**	82	Y
SD1												
2.0 *RRAW*	E	1994	20V973		M		☞8	09/86 ▸ 10/86	GTS1106	**820049**	88	Y
2.3 *RRHW*	E	2350	PE146-10C		M		☞8	07/86 ▸ 12/81	GTS1106	**820049**	88	Y
2.6 *RRFW*	E	2597	PE166-12C		M		☞8	1987 ▸ 05/84	GTS1106	**820049**	88	Y
2.6 *RRMW*	E	2597	PE166-13C		A		☞8	1987 ▸ 1987	GTS1106	**820049**	88	Y
Streetwise												
1.4 i 16V	E	1396	14K4F4		M			08/03 ▸ 04/05	PEL10016	**820056**	88	Y
1.6 i 16V	E	1588	16K4F4		M			08/04 ▸ 04/05	PEL10016	**820056**	88	Y
1.8 i 16V	E	1796	18K4		A			08/04 ▸ 04/05	PEL10016	**820056**	88	Y
2.0 D	D	1996	20T2N		M			09/03 ▸ 04/05	PEM101020	●**820955**	92	N
SAAB												
9-3 (98>2003)												
2.0 i 16V,2.0 i Turbo 16V	E	1985	B204I, B204L		M		☞1	04/98 ▸	8822025	**820074**	89	Y

• **New** Nouveau **Nuevo** Novo **Nuovo** Nieuw **Neu** Yeni Новый Nou

Type Ctr.		cc		AC		2 3	OE	Valeo	(°)C	
SAAB (.../...)										
9-3 (98>2003) (.../...)										
2.0 i 16V,2.0 i Turbo 16V	E	1985	B204I, B204L	A		☞1	04/98 ▸	8822025	**820074**	89	Y
2.3 i 16V	E	2290	B234I	M		☞1	04/98 ▸	8822025	**820074**	89	Y
2.3 i 16V	E	2290	B234I	A		☞1	04/98 ▸	8822025	**820074**	89	Y
2.2 TiD	D	2172	X22DTH	M		☞1	05/98 ▸	8822025	**820074**	89	Y
9-3 (2002>)										
1.9 TiD 16V	D	1910	Z19DTH	M			01/06 ▸	55202510	**820965**	88	Y
1.9 TiD 16V	D	1910	Z19DTH	A			01/06 ▸	55202510	**820965**	88	Y
2.2 TiD 16V *YS/3FB/3FD*	D	2171	D223L-125	M			09/02 ▸	24420728	**820594**	92	Y
9-5 (97>2001)										
2.0 i Turbo 16V *640*	E	1985	B205R, B205E	M		☞1	09/97 ▸	9194242	**820074**	89	Y
2.0 i Turbo 16V *640*	E	1985	B205R, B205E	A		☞1	09/97 ▸	9194242	**820074**	89	Y
2.3 i Turbo 16V *640, EH45G*	E	2290	B235E, B235R	M		☞1	09/97 ▸	9194242	**820074**	89	Y
2.3 i Turbo 16V *640*	E	2290	B235R, B235E	A		☞1	09/97 ▸	9194242	**820074**	89	Y
3.0 i V6 Turbo 24V *640*	E	2962	B308E	A		☞1	01/98 ▸	8822025	**820074**	89	Y
3.0 i V6 Turbo 24V *640*	E	2962	B308E	A			01/98 ▸ 08/01	4623815	**820149**	92	Y
9-5 (2001>2004)										
2.0 i Turbo 16V	E	1985	B205E-E2, B205E-D4	M		☞1	09/01 ▸	9194242	**820074**	89	Y
2.0 i Turbo 16V	E	1985	B205E-D4, B205E-E2	A		☞1	09/01 ▸	9194242	**820074**	89	Y
2.3 T Turbo 16V,2.3 i Turbo 16V	E	2290	B235E, B235R-D4, B235L-E2 B235R-E2, B235L-D4	M		☞1	09/01 ▸	9194242	**820074**	89	Y
2.3 T Turbo 16V,2.3 i Turbo 16V	E	2290	B235E, B235L-E2, B235R-D4 B235L-D4, B235R-E2	A		☞1	09/01 ▸	9194242	**820074**	89	Y
2.2 TiD	D	2171	D223L	M			02/02 ▸	5342258	**820594**	92	Y
2.2 TiD	D	2171	D223L	A			02/02 ▸	5342258	**820594**	92	Y
3.0 TiD V6	D	2962	D308L	M		☞4,9	09/01 ▸	5952148	**820513**	82	Y
900 (79>93)										
2.0 T Turbo 2.0 T Turbo 16V,2.0 i 16V *AC/35D/45D/55D/75D, AD 35S/55S/75L/75S, AT/35L 45L/55L/75L*	E	1985	B202I, B202L, B202S	M		☞1	09/83 ▸ 06/93	8822025	**820074**	89	Y
2.0 T Turbo 2.0 T Turbo 16V,2.0 i 16V *AC/35D/45D/55D/75D, AD 35S/55S/75L/75S, AT/35L 45L/55L/75L*	E	1985	B202L, B202S, B202I	M		☞8	09/83 ▸ 06/93	8817538	**820073**	82	Y
2.0 T Turbo 2.0 T Turbo 16V,2.0 i 16V *AC/36D/46D/56D/76D, AD 36S/56S/76L*	E	1985	B202I, B202S, B202L	A		☞8	08/85 ▸ 06/93	8817538	**820073**	82	Y
2.0,2.0 i *AM36J, AM56J, AM46J AL56C, AH26J*	E	1985	B201C,B201I	A			09/83 ▸ 1989	8389512	**819883**	88	Y
2.0,2.0 i *AM35J, AL45C, AM55J AM45J, AH35J, AM25J AL35C, AL44C, AM55T AH25J*	E	1985	B201C,B201I,B201T	M			09/83 ▸ 1989	8389512	**819883**	88	Y
2.0 T Turbo 2.0 T Turbo 16V,2.0 i 16V *AC/36D/46D/56D/76D, AD 36S/56S/76L*	E	1985	B202I, B202S, B202L	A		☞1	08/85 ▸ 06/93	8822025	**820074**	89	Y
900 (93>)										
2.0 16V,2.0 Turbo 16V *DC/35A/55A, DD/35N/55N DX/35J/35N/55J/55N/75N*	E	1985	B206I, B204I, B204L	M		☞1	07/93 ▸ 02/98	8822025	**820074**	89	Y
2.0 16V *DC/38A/58A, DX/38J/58J*	E	1985	B204I, B206I	A		☞1	07/93 ▸ 02/98	8822025	**820074**	89	Y
2.3 16V *DC/35B/55B, DX/35B/55B 75B*	E	2290	B234I	M		☞1	07/93 ▸ 02/98	8822025	**820074**	89	Y
2.3 16V *DC/38B/58B, DX/38B/58B*	E	2290	B234I	A		☞1	07/93 ▸ 02/98	8822025	**820074**	89	Y
2.5 V6 *DC55V*	E	2498	B258I	M			07/93 ▸	4623815	**820149**	92	Y
2.5 V6 *DC/58V, DX/55V/58V*	E	2498	B258I	A			07/93 ▸	4623815	**820149**	92	Y
9000										
2.0 Turbo 16V,2.0 i 16V *CC/45D/55D/65D/65J, CT55L CD/45L/55D/55L/55T/65D 65L, CX/45J/65J*	E	1985	B202I, B202L, B204I	M		☞8	06/84 ▸ 07/98	8817538	**820073**	82	Y
2.0 Turbo 16V,2.0 i 16V *CC/45D/55D/65D/65J, CT55L CD/45L/55D/55L/55T/65D 65L, CX/45J/65J*	E	1985	B202I, B202L, B204I	M		☞1	06/84 ▸ 07/98	8822025	**820074**	89	Y

• **New** Nouveau **Nuevo** Novo **Nuovo** Nieuw **Neu** Yeni Новый Nou

		E	CC			AC			OE	Valeo	(°)C	
SAAB (.../...)												
9000 (.../...)												
2.0 Turbo 16V,2.0 i 16V	*CC/48D/58D/68D, CT58L, CD 48L/58L/68D*	E	1985	B202I, B202L	A		☞8	06/84 ▸ 07/94	8817538	**820073**	82	Y
2.0 Turbo 16V,2.0 i 16V	*CC/48D/58D/68D, CT58L, CD 48L/58L/68D*	E	1985	B202L, B202I	A		☞1	06/84 ▸ 07/94	8822025	**820074**	89	Y
2.3 T Turbo 16V,2.3 i 16V	*CC/45B/55B/65B, CD/45M 45U/55M/56M/65M/65R/65U CX/45B/45M/45U/65B/65M 65R/65U*	E	2290	B235R, B234L, B234I, B234E	M		☞8	01/90 ▸ 07/98	8817538	**820073**	82	Y
2.3 T Turbo 16V,2.3 i 16V	*CC/45B/55B/65B, CD/45M 45U/55M/56M/65M/65R/65U CX/45B/45M/45U/65B/65M 65R/65U*	E	2290	B234E, B234L, B234I, B235R	M		☞1	01/90 ▸ 07/98	8822025	**820074**	89	Y
2.3 T Turbo 16V,2.3 i 16V	*CC/48B/58B/68B, CD/48M 58M/68M/68U, CX/48M/68B 68M/68U*	E	2290	B234L, B234I, B234E	A		☞1	01/90 ▸ 07/98	8822025	**820074**	89	Y
2.3 T Turbo 16V,2.3 i 16V	*CC/48B/58B/68B, CD/48M 58M/68M/68U, CX/48M/68B 68M/68U*	E	2290	B234L, B234E, B234I	A		☞8	01/90 ▸ 07/98	8817538	**820073**	82	Y
3.0 i V6	*CX/45W/65W*	E	2962	B308I	M			07/94 ▸ 1995	4623815	**820149**	92	Y
3.0 i V6	*CX/48W/68W*	E	2962	B308I	A			07/94 ▸ 1995	4623815	**820149**	92	Y
SEAT												
Alhambra												
1.8 i 20V,1.8 i Turbo 20V	*7V8/3J5/9J5, 7V9/3B3/5B3 9B3*	E	1781	AJH, AWC	M			10/98 ▸	050121113C	**820171**	87	Y
1.8 i 20V,1.8 i Turbo 20V	*7V8/3J5/3J8, 7V9/3B9/5B9 9B9*	E	1781	AWC, AJH	A			05/98 ▸	050121113C	**820171**	87	Y
2.0 i	*7V9/2A3/3A3/5A3*	E	1984	ATM	M			06/00 ▸	050121113C	**820171**	87	Y
2.0 i	*7V8/355/3S5/9S5*	E	1984	ADY	M			03/96 ▸ 05/00	056121113D	**819868**	87	Y
2.0 i	*7V9/2A8/3A8*	E	1984	ATM	A			06/00 ▸	050121113C	**820171**	87	Y
2.0 i	*7V89S8*	E	1984	ADY	A			06/96 ▸ 05/00	056121113D	**819868**	87	Y
2.8 i VR6 24V ▸3-505 000	*7V93D9, 7V95D9, 7V99D9 7V95D7, 7V93D7, 7V99D7*	E	2792	AUE,AYL	A			06/00 ▸ 06/02	075121113D	**820065**	87	Y
2.8 i VR6 24V	*7V93D7, 7V95D7, 7V95D3 7V99D7, 7V93D3, 7V99D3*	E	2792	AUE,AYL	M			06/00 ▸ 05/03	075121113D	**820065**	87	Y
2.8 i VR6 24V 7M-3-505 000 ▸	*7V9/3D3/3D7/5D3/5D7/9D3*	E	2792	AYL	M			06/02 ▸	022121113	**820958**	80	Y
2.8 i VR6 24V 7M-3-505 000 ▸	*7V9/3D9/5D9/9D9*	E	2792	AYL	A			06/02 ▸	022121113	**820958**	80	Y
1.9 TDi	*7V8/385/3X5/985/9X5, 7V9 2U3/3C3/3T3/3T7/3U3/5C3 5T3/5T7/9C3/9T3/9T7/9U3*	D	1896	AUY, ASZ, ANU, 1Z, AFN, AHU	M		☞4	03/96 ▸	044121113	**820168**	87	Y
1.9 TDi	*7V8/3X5/9X5*	D	1896	1Z	M			03/96 ▸ 06/96	056121113D	**819868**	87	Y
1.9 TDi	*7V8/388/988, 7V9/3T7/3T9 5T9/9T7/9T9*	D	1896	AUY, AFN	A		☞4	09/97 ▸	044121113	**820168**	87	Y
Alhambra II (2003>)												
1.8 i Turbo 20V	*7V9/3B3/5B3/9B3*	E	1781	AWC	M			06/03 ▸	050121113C	**820171**	87	Y
1.8 i Turbo 20V	*7V9/3B9/5B9/9B9*	E	1781	AWC	A			06/03 ▸	050121113C	**820171**	87	Y
2.0 i	*7V9/3A3/5A3*	E	1984	ATM	M			06/03 ▸	050121113C	**820171**	87	Y
2.0 i	*7V9/2A8/3A8*	E	1984	ATM	A			06/03 ▸	050121113C	**820171**	87	Y
2.8 i VR6 24V	*7V9/3D3/3D7/5D3/5D7/9D3 9D7*	E	2792	AYL	M			06/03 ▸	022121113	**820958**	80	Y
2.8 i VR6 24V	*7V9/3D9/5D9/9D9*	E	2792	AYL	A			06/03 ▸	022121113	**820958**	80	Y
1.9 TDi	*7V9/363/3C3/3C7/3T3/3T7 3U3/563/5C3/5C7/5T3/5T7 963/9C3/9C7/9T3/9T7/9U3*	D	1896	ASZ, AUY, ANU, BTB	M		☞4	06/03 ▸	044121113	**820168**	87	Y
1.9 TDi	*7V9/3T9/5T9/9T9*	D	1896	AUY	A		☞4	06/03 ▸	044121113	**820168**	87	Y
2.0 TDi 16V	*7V9/353/383/553/583/953 983*	D	1968	BRT	M		☞4	06/05 ▸	044121113	**820168**	87	Y
Altea												
1.4 i 16V	*5P11H2, 5P51E2*	E	1390	BXW	M			05/06 ▸	032121110B	**820962**	87	Y

• **New** Nouveau **Nuevo** Novo **Nuovo** Nieuw **Neu** Yeni Новый Nou

Type Ctr.		CC		AC		2 3	OE	Valeo	(°)C	
SEAT (.../...)										
Altea (.../...)										
1.6 i *5P1/1D2/2D2, 5P5/1D2/2D2/2J1*	E	1595	BSF, BSE, BGU	M			03/04 ▸	050121113C	**820171**	87	Y
2.0 FSi 150 16V *5P11M3, 5P12M3*	E	1984	BLR,BLY	A			06/04 ▸ 11/05	06F121111	**820576**	105	Y
2.0 FSi 150 16V *5P12M1, 5P11M1*	E	1984	BLR,BLY	M			05/04 ▸ 11/05	06F121111	**820576**	105	Y
1.9 TDi *5P1/112/121/122/212/222 5P5/112/122/212/222*	D	1896	BKC, BXE, BJB, BLS	M		☞4	04/04 ▸	044121113	**820168**	87	Y
2.0 TDi,2.0 TDi 16V *5P1/131/231/241/261/561* 2.0 TDi PD 16V *5P5/231/241/864*	D	1968	AZV, BMN, BKD	M			03/04 ▸	03G121113	**820058**	88	Y
2.0 TDi *5P1/171/271, 5P5/171/261 271/871*	D	1968	BMM	M		☞4	01/06 ▸	03G121113A	**820168**	87	Y
2.0 TDi 16V *5P1/133/233/243, 5P5/233 243*	D	1968	AZV, BKD	A			06/04 ▸	03G121113	**820058**	88	Y
2.0 TDi *5P5273, 5P1/173/273*	D	1968	BMM	A		☞4	11/05 ▸	03G121113A	**820168**	87	Y
Arosa										
1.0 i *6H1/0A4/0B4/0C4/0H4/0H5/0L4/0W4/1B4*	E	999	ANV, AUC, AER, ALD, ALL, AHT	M			02/97 ▸	032121110B	**820962**	87	Y
1.4 i,1.4 i 16V *6H1/0D4/0E4/0F4/0N4/0R4 0S4/0X4/1N4/2N4/3E4*	E	1390	ANW, AKK, AUD, AKV, APQ, AEX AUB, AFK, AQQ	M			02/97 ▸	032121110B	**820962**	87	Y
1.4 i *6H1/0D3/0F3/0S3/0X3/1N3/2N3*	E	1390	APQ, AUD, AEX, AKK, AKV, ANW	A			02/97 ▸	032121110B	**820962**	87	Y
1.4 TDi *6H1/094/194/294*	D	1422	AMF	M		☞4	10/99 ▸	044121113	**820168**	87	Y
1.7 SDi *6H1/074/0M4/174*	D	1716	AKU	M		☞4	08/97 ▸	044121113	**820168**	87	Y
Cordoba (93>96)										
1.4 i *6K2/2U2/2U3/2V2/3U2/3U3/3V2*	E	1390	AEX	M			09/95 ▸ 06/96	032121110B	**820962**	87	Y
1.4 i *6K2/2J1/2J2/2P1/2P2/2R1/2R2/3J1/3J2 3P1/3P2/3R1/3R2*	E	1391	ABD	M		☞4	11/93 ▸ 11/95	030121113	**820132**	84	Y
1.6 i *6K2/2A1/2D1/2S1/3A1/3D1*	E	1595	1F	M			11/93 ▸ 06/96	056121113D	**819868**	87	Y
1.6 i *6K2/2E1/2E2/3E1/3E2*	E	1598	ABU	M		☞4	11/93 ▸ 07/94	030121113	**820132**	84	Y
1.6 i *6K2/2W1/2W2/3W1/3W2/8W1/8W2*	E	1598	AFT	M			09/95 ▸ 06/96	056121113D	**819868**	87	Y
1.8 i,1.8 i 16V *6K2/2D1/2F1/2M1/2T1/3C1 3F1/3M1/6G1/8C1/8G1*	E	1781	ACC, ADL, ABS, ADZ	M			11/93 ▸ 06/96	056121113D	**819868**	87	Y
1.8 i *6K2/2C2/2F2/2M2/3C2/3F2/3M2*	E	1781	ADZ, ABS	A			01/94 ▸ 06/96	056121113D	**819868**	87	Y
2.0 i *6K2/3H1/5H1/8H1/8L1*	E	1984	2E, AGG	M			11/93 ▸ 06/96	056121113D	**819868**	87	Y
1.9 D,1.9 SDi,1.9 TD *6K2/2N1/2X1/2X2/2Z2/3Z2 3E1/3K1/3Q1/3X1/3Y2/3Z2 5E1/5K1/5Q1*	D	1896	1Y, AAZ, AEY	M		☞4	11/93 ▸ 06/96	044121113	**820168**	87	Y
Cordoba (96>99)										
1.0 i *6K2/261/361*	E	999	AER	M			06/97 ▸ 04/99	032121110B	**820962**	87	Y
1.4 i,1.4 i 16V *6K2/271/2A3/2U2/2U3/2V2 371/3A3/3U2/3U3/3V2, 6K5 2A3/2U2/2U3/2V2/3A3/3U2 3U3/3V2*	E	1390	APQ, AEX, AKV, AFH, ANX	M			07/96 ▸ 05/99	032121110B	**820962**	87	Y
1.6 i *6K2/2D1/2S1/3D1/8D1*	E	1595	1F	M			07/96 ▸ 04/99	056121113D	**819868**	87	Y
1.6 i *6K2/2D4/3D4, 6K5/2D4/3D4*	E	1595	1F	A			05/97 ▸ 05/99	056121113D	**819868**	87	Y
1.6 i *6K2/2W1/2W2/3W1/3W2/5W1/5W2/8W1/8W2 6K5/2W1/3W1/3W2*	E	1598	AFT	M			07/96 ▸ 05/99	056121113D	**819868**	87	Y
1.6 i *6K2/251/2F1/351/3F1/851/8F1, 6K5 251/2F1/351/3F1*	E	1598	ALM, AEE	M			05/97 ▸ 05/99	032121110B	**820962**	87	Y
1.8 i *6K52T1, 6K2/2M1/2T1/3M1*	E	1781	ACC, ADZ	M			07/96 ▸ 05/99	056121113D	**819868**	87	Y
1.8 i *6K2/2C2/2M2/3C2/3M2*	E	1781	ADZ	A			07/96 ▸ 04/99	056121113D	**819868**	87	Y
2.0 i *6K2/2L1/5L1/8L1*	E	1984	AGG	M			07/96 ▸ 04/99	056121113D	**819868**	87	Y
2.0 i 16V *6K2/611/811*	E	1984	ABF	M		☞4	07/96 ▸ 04/99	037121113	**820245**	82	Y
1.9 D,1.9 SDi,1.9 TD 1.9 TDi *6K2/2N2/2Y2/2Z2/3E1/3N2 3Y2/3Z2/581/5E1/5N2/881 8N2, 6K5/2N2/2Z2/3N2/3Z2 581*	D	1896	AEY, 1Y, AHU, ARN, AAZ	M		☞4	07/96 ▸ 05/99	044121113	**820168**	87	Y
Cordoba (99>2002)										
1.0 i,1.0 i 16V *6K2/2A6/2B6/2Q6/2V6/2Y6 3A6/3B6/3V6/3Y6*	E	999	AST, ANV, ALD, AVZ, AUC	M			08/99 ▸ 08/02	032121110B	**820962**	87	Y
1.4 i 16V *6K52R6*	E	1390	AUB	M		☞4	07/00 ▸ 08/02	044121113	**820168**	87	Y

• **New** Nouveau **Nuevo** Novo **Nuovo** Nieuw **Neu** Yeni Новый Nou

Type Ctr.		cc		AC			OE	Valeo	(°)C	
SEAT (.../...)										
Ibiza (93>99) (.../...)										
1.9 D,1.9 SDi,1.9 TD 1.9 TDi	*KK13K1, 6K1/1N1/1X1/1Y2 1Z2/2N1/2N2/2X1/2Y2/2Z2 3E1/3K1/3N2/3Q1/3X1/3Y2 3Z2/581/5E1/5K1/5N2/5Q1 7E1*	D	1896	1Y, 1Z, AEY, AAZ, AHU, AFN	M		☞4	02/93 ▸ 1999	044121113	**820168**	87	Y
Ibiza (99>2001)										
1.0 i,1.0 i 16V	*6K1/1A6/1B6/1V6/2A6/2B6 2Q6/2V6/2Y6/3A6/3B6/3V6 3Y6*	E	999	ANV, AVZ, ALD, AUC, AST	M			08/99 ▸	032121110B	**820962**	87	Y
1.4 i,1.4 i 16V	*6K1/1C6/1D6/1U6/2C6/2D6 2E6/2R6/2U6/3C6/3D6/3E6 3R6/3U6/5R6*	E	1390	AQQ, AKK, AUB, AUD, AUA, ANW APE	M			08/99 ▸	032121110B	**820962**	87	Y
1.6 i	*6K1/2H6/2S6/2T6/3H6/3T6/5H6/5T6*	E	1595	AKL, AUR, APF	M			06/99 ▸	050121113C	**820171**	87	Y
1.6 i	*6K1/2G8/2S7/3G8*	E	1595	AEH, AKL	A			01/00 ▸	050121113C	**820171**	87	Y
1.6 i	*6K1/2F1/3F1*	E	1598	ALM	M			08/99 ▸	032121110B	**820962**	87	Y
1.8 i Turbo 20V	*6K1/5J6/6J6*	E	1781	AQX, AYP	M			12/99 ▸	050121113C	**820171**	87	Y
1.9 SDi,1.9 TDi	*6K1/1K6/1M6/2K6/2L6/2M6 2N6/3K6/3L6/3M6/3N6/3X6 5L6/5N6/5X6*	D	1896	AGP, AGR, ALH, ASV, AQM	M		☞4	04/99 ▸	044121113	**820168**	87	Y
Ibiza (2001>)										
1.4 i 16V 6L-2-000 001 ▸	*6L1/2E4/2G4/2H4/3E4/3G4 3H4/5E4/5G4/5H4*	E	1390	BBY, AUB, BKY, BXW, BBZ	M			04/02 ▸	032121110B	**820962**	87	Y
1.4 i 16V	*6L1/2E4/2G4/2H4/3E4/3G4 3H4/5E4/5G4/5H4*	E	1390	BKY, BXW, BBZ	M			04/02 ▸	032121110F	**820057**	82	Y
1.4 i 16V	*6L1/2G3/3G3*	E	1390	BBY, BKY	A			06/02 ▸	032121110B	**820962**	87	Y
1.4 i 16V	*6L1/2G3/3G3*	E	1390	BKY	A			05/04 ▸	032121110F	**820057**	82	Y
1.8 i Turbo 20V	*6L1/6P4/7J4*	E	1781	BKV, BJX, BBU	M			12/03 ▸	050121113C	**820171**	87	Y
2.0 i 6L-2-000 001 ▸	*6L1/214/2L4/2T4/314/3L4/3T4/5L4/5T4*	E	1984	BBX, AZL	M			▸ 03/12	050121113C	**820171**	87	Y
1.4 TDi	*6L1/204/254/264/274/304 354/364/374/504/554/564 574*	D	1422	AMF, BNV, BMS, BNM	M		☞4	05/02 ▸	044121113	**820168**	87	Y
1.9 SDi,1.9 TDi 6L-2-000 001 ▸	*6L1/114/214/224/284/314 324/336/384/524/536/584 646/736*	D	1896	AXR, ASZ, BPX, ASY, ATD, BLT BUK, BMT	M		☞4	09/06 ▸	044121113	**820168**	87	Y
Leon										
1.4 i 16V	*1M1/2C4/2D4/3C4/3D4/5C4 5D4/8C4/8D4*	E	1390	APE, AHW, BCA, AXP	M			11/99 ▸	032121110B	**820962**	87	Y
1.6 i 16V	*1M1/3KC/5KC/8KC*	E	1595	BCB, AZD, AUS	M			06/00 ▸	032121110B	**820962**	87	Y
1.6 i	*1M1/3J4/5J4/8J4*	E	1595	AKL	M			11/99 ▸	050121113C	**820171**	87	Y
1.6 i	*1M1/3H3/5H3/8H3*	E	1595	AEH	A			08/99 ▸	050121113C	**820171**	87	Y
1.8 i 20V,1.8 i Turbo 20V	*1M1/3Q4/516/536/559/586 599/5P4/5Q4/636/736/759 8P4/8Q4*	E	1781	APG, BAM, AGN, AUQ, APP, AJQ ARY, AMK	M			11/99 ▸	050121113C	**820171**	87	Y
1.8 i 20V	*1M1/3Q3/5Q3/8Q3*	E	1781	APG	A			09/00 ▸	050121113C	**820171**	87	Y
2.8 i V6 24V	*1M16W7, 1M17W7*	E	2792	AUE,BDE	M			10/00 ▸ 04/04	075121113D	**820065**	87	Y
1.9 SDi,1.9 TDi	*1M1/204/304/324/344/346 374/3B4/524/546/566/567 574/666/667/766/767/824 844/846/874/8B4*	D	1896	ASV, AQM, AGR, ASZ, AHF, ARL ALH	M		☞4	11/99 ▸	044121113	**820168**	87	Y
Leon II										
1.6 i	*1P1/1D2/2D2*	E	1595	BSF, BSE	M			07/05 ▸	050121113C	**820171**	87	Y
2.0 FSi 150 16V	*1P11M3, 1P12M3*	E	1984	BLR,BLY	A			07/05 ▸ 11/05	06F121111	**820576**	105	Y
2.0 FSi 150 16V	*1P12M1, 1P11M1*	E	1984	BLR,BLY	M			07/05 ▸ 11/05	06F121111	**820576**	105	Y
1.9 TDi	*1P1/112/122/212/222*	D	1896	BKC, BXE, BLS	M		☞4	07/05 ▸	044121113	**820168**	87	Y
2.0 TDi 16V	*1P1/131/231/241/561*	D	1968	BKD, AZV, BMN	M			07/05 ▸	03G121113	**820058**	88	Y
2.0 TDi	*1P1/171/271*	D	1968	BMM	M		☞4	10/05 ▸	03G121113A	**820168**	87	Y
2.0 TDi 16V	*1P1/133/233/243*	D	1968	BKD, AZV	A			07/05 ▸	03G121113	**820058**	88	Y

• **New** Nouveau **Nuevo** Novo **Nuovo** Nieuw **Neu** Yeni Новый Nou

Valeo

											(°)C	
SEAT (.../...)												
Leon II (.../...)												
2.0 TDi *1P1/173/273*	D	1968	BMM	A		☞4	11/05 ▸	03G121113A	**820168**	87	Y
Malaga												
1200	E	1193	021A-1000	M			05/85 ▸	SE021032221B	**819868**	87	Y
1500	E	1461	021A-2000	M			05/85 ▸	SE021032221B	**819868**	87	Y
Ronda												
1200 *TC10, TC20, TC60, TC70, TP05, TP18 TP21, TC0/0*	E	1193	SEAT4, 021A-1000	M			10/84 ▸ 06/87	SE021032221B	**819868**	87	Y
1500 *TP76, TP90*	E	1461	021C-2000, 021A-2000	M			10/84 ▸ 06/87	SE021032221B	**819868**	87	Y
1700 D *TD69, TD77*	D	1714	SEAT10	M			10/84 ▸ 06/85	SE021032221B	**819868**	87	Y
Toledo (91>98)												
1.6,1.6 i *1L2/2A1/2B1/2Q1/2X1/3A1 3B1/3Q1/3X1/5X1/8A1/8B1 8Q1/8X1*	E	1595	ABN, 1F, EZ	M			02/91 ▸ 10/98	056121113D	**819868**	87	Y
1.6 i *1L2/2W1/311/3W1/511/5W1/8W1*	E	1598	AFT, AKS	M			09/96 ▸ 10/98	056121113D	**819868**	87	Y
1.8 i,1.8 i 16V *1L2/2C1/2C2/2J1/2P1/3C1 3C2/3J1/3P1/3P2/5E1/5F1 8C1/8C2/8J1/8P1/8P2*	E	1781	ADZ, RP, ABS, PL, KR	M			02/91 ▸ 10/98	056121113D	**819868**	87	Y
2.0 i *1L2/2K1/3D1/3K1/3T1/5D1/5K1/5T1/8D1 8K1/8T1*	E	1984	2E, AGG	M			02/91 ▸ 10/98	056121113D	**819868**	87	Y
2.0 i 16V *1L2/5M1/5M2/6M1/6M2*	E	1984	ABF	M		☞4	03/94 ▸ 10/98	037121113	**820245**	82	Y
2.0 i *1L2/3D2/3T2/5D2/5K2/5T2/8D2/8T2*	E	1984	AGG, 2E	A			02/91 ▸ 10/98	056121113D	**819868**	87	Y
1.9 D,1.9 TD,1.9 TDi *1L2/2H1/2L1/2S1/3G1/3G2 3H1/3L1/3N1/3R1/3S1/3Z1 5R1/5Z1/8G1/8G2/8H1/8L1 8N1/8R1/8S1/8Z1*	D	1896	1Z, 1Y, AAZ, AHU, AFN	M		☞4	02/91 ▸ 10/98	044121113	**820168**	87	Y
Toledo (98>2004)												
1.4 i 16V *1M2/2C4/2D4/3C4/3D4*	E	1390	AXP, AHW	M			01/00 ▸ 05/02	032121110B	**820962**	87	Y
1.6 i 16V *1M2/2KC/3KC/5KC/8KC*	E	1595	AUS, BCB, AZD	M			06/00 ▸	032121110B	**820962**	87	Y
1.6 i *1M2/2J4/3J4/5J4/8J4*	E	1595	AKL	M			10/98 ▸	050121113C	**820171**	87	Y
1.6 i *1M2/3H3/5H3/8H3*	E	1595	AEH	A			11/98 ▸	050121113C	**820171**	87	Y
1.8 i 20V *1M2/3P4/3Q4/536/5P4/5Q4 836/8P4/8Q4*	E	1781	AGN, APG, AUQ	M			10/98 ▸	050121113C	**820171**	87	Y
1.8 i 20V *1M2/3N3/3Q3/5N3/5Q3/8N3 8Q3*	E	1781	APG, AGN	A			11/98 ▸	050121113C	**820171**	87	Y
2.3 i VR5 20V *1M26T4*	E	2324	AGZ	M		☞4	10/98 ▸ 04/99	044121113	**820168**	87	Y
2.3 i VR5 20V *1M28U4, 1M26T4, 1M26U4 1M25U4, 1M25T4*	E	2324	AGZ,AQN	M			10/98 ▸ 11/03	075121113D	**820065**	87	Y
1.9 TDi *1M2/224/244/274/2B4/324 344/374/3B4/524/566/574 666/824/844/846/866/874 8B4*	D	1896	ASV, AGR, AHF, ALH, ARL, ASZ	M		☞4	10/98 ▸	044121113	**820168**	87	Y
Toledo (2004>)												
1.4 iSRE *5P2/0E2/1E2*	E	1390	BXW	M			05/06 ▸ 06/07	032121110B	**820962**	87	Y
1.6 i *5P2/1D2/2D2*	E	1595	BSF, BSE, BGU	M			09/04 ▸	050121113C	**820171**	87	Y
2.0 FSi 16V,2.0 TFSi 16V *5P22M3, 5P21M3, 5P22P3*	E	1984	BLR,BLY,BVY,BVZ,BWA	A			09/04 ▸ 05/09	06F121111	**820576**	105	Y
2.0 FSi 16V,2.0 TFSi 16V *5P21M1, 5P22M1, 5P22P1*	E	1984	BLR,BLY,BVY,BVZ,BWA	M			09/04 ▸ 05/09	06F121111	**820576**	105	Y
1.9 DTi,1.9 TDi *5P2/012/022/112/122/212 222*	D	1896	BLS, BXE, BKC, BJB	M		☞4	09/04 ▸	044121113	**820168**	87	Y
1.9 TDi *5P2/023/123/223*	D	1896	BLS	A		☞4	06/07 ▸	03G121113A	**820168**	87	Y
2.0 TDi 16V 2.0 TDi PD 16V *5P2/031/131/141/231/241 261/271*	D	1968	BKD, AZV, BMN	M			09/04 ▸	03G121113	**820058**	88	Y
2.0 TDi *5P2/071/171/271*	D	1968	BMM	M		☞4	01/06 ▸	03G121113A	**820168**	87	Y
2.0 TDi 16V 2.0 TDi PD 16V *5P2/033/073/133/143/173 233/243/273*	D	1968	BMN, AZV, BKD	A			09/04 ▸	03G121113	**820058**	88	Y
2.0 TDi *5P2/173/273*	D	1968	BMM	A		☞4	01/06 ▸ 05/06	03G121113A	**820168**	87	Y
SEAT												
Inca												
1.4 i,1.4 i 16V *6K9/1A1/1D6/1E6/1U1/1V1 2A1/2D6/2E6/2U1/2U4/2V1 3A1/3D6/3E6/3U1/3U4/3V1 4A1/4D6/4E6/4U1/4V1*	E	1390	AKV, AEX, APQ, AUA, AUD	M			11/95 ▸	032121110B	**820962**	87	Y

• **New** Nouveau **Nuevo** Novo **Nuovo** Nieuw **Neu** Yeni Новый Nou

		E	1595	1F	M			11/95 ▸ 05/97	056121113D	**819868**	87	Y
		E	1598	AEE	M			06/97 ▸	032121110B	**820962**	87	Y
		D	1714	AHB	M		☞4	09/96 ▸	044121113	**820168**	87	Y
		D	1896	1Y, AEY, AYQ	M		☞4	11/95 ▸	044121113	**820168**	87	Y

SKODA

100-135

		E	1046	742.10	M		☞8	09/76 ▸ 07/86	113095090	**820541**	80	Y
		E	1107	SKOD01	M		☞8	04/70 ▸ 10/77	113095090	**820541**	80	Y
		E	1174	742.12	M		☞8	08/77 ▸ 09/89	113095090	**820541**	80	Y
		E	1289	743.13, SKOD10, 742., 742.13	M		☞8	09/81 ▸	113095090	**820541**	80	Y

Fabia (99>2004)

		E	1390	BBZ, AUA, BKY, BBY	M			10/99 ▸	032121110F	**820057**	82	Y
		E	1390	AUA, AUB, BKY, BBZ, BBY	M			10/99 ▸	032121110B	**820962**	87	Y
		E	1390	BKY, AUA, BBY	A			05/00 ▸	032121110B	**820962**	87	Y
		E	1390	AUA, BBY, BKY	A			05/00 ▸	032121110F	**820057**	82	Y
		E	1397	AME	M		☞4	08/99 ▸	044121113	**820168**	87	Y
		E	1984	AZL	M			12/99 ▸ 07/04	050121113C	**820171**	87	Y
		D	1422	AMF	M		☞4	09/00 ▸	044121113	**820168**	87	Y
		D	1896	ATD	M			03/01 ▸ 11/02	032121110B	**820962**	87	Y
		D	1896	ASY, ATD, ASZ	M		☞4	10/99 ▸	044121113	**820168**	87	Y

Fabia (FL) (2004>2007)

		E	1390	BBZ-E4, BKY	M			08/04 ▸	032121110B	**820962**	87	Y
		E	1390	BBZ-E4, BKY	M			08/04 ▸	032121110F	**820057**	82	Y
		E	1390	BKY	A			08/04 ▸	032121110F	**820057**	82	Y
		E	1390	BKY	A			08/04 ▸	032121110B	**820962**	87	Y
		E	1984	AZL-E4	M			08/04 ▸	050121113C	**820171**	87	Y
		D	1422	BNM, BNV, AMF	M		☞4	08/04 ▸	044121113	**820168**	87	Y

• **New** Nouveau **Nuevo** Novo **Nuovo** Nieuw **Neu** Yeni Новый Nou

			CC		AC			OE	Valeo	(°)C		
SKODA (.../...)												
Fabia (FL) (2004>2007) (.../...)												
1.9 SDi,1.9 TDi	*6Y2/124/164/224/264/324 364/585, 6Y3/124/164/224 264/324/364, 6Y5/124/164 224/264/324/364/P24*	D	1896	ATD, AXR, ASY, ASZ, BLT	M		☞4	08/04 ▸	044121113	**820168**	87	Y
Fabia II (2007>)												
1.4 i,1.4 i 16V	*542/1D4/1G4/2G4/3G4/4G4 545/1G4/2G4/3G4/4G4*	E	1390	BXW-E2, BXW-E4	M			01/07 ▸	032121110F	**820057**	82	Y
1.4 TDI	*542/114/134/144/214/234 244/314/334/344/414/434 444, 545/114/134/144/214 234/244/314/334/344/414 434/444*	D	1422	BNV, BNM, BMS/F	M		☞4	01/07 ▸	044121113	**820168**	87	Y
1.9 TDI	*542/164/174/264/274/364 374/464/474, 545/164/264 274/364/464/474*	D	1896	BLS/F, BSW	M		☞4	04/07 ▸	044121113	**820168**	87	Y
Favorit												
1.1		E	1137	SKOD04	M		☞8	01/89 ▸ 07/95	113095090	**820541**	80	Y
1.1		E	1137	SKOD04	M		☞8	01/89 ▸ 07/95	114095090	**819927**	88	Y
1.3	*AEA200, CEA300, CEE300, ADA/200/300*	E	1289	136, 781135B	M		☞8	03/88 ▸ 07/95	113095090	**820541**	80	Y
1.3	*AEA200, CEA300, CEE300, ADA/200/300*	E	1289	136, 781135B	M		☞8	03/88 ▸ 07/95	114095090	**819927**	88	Y
Felicia (94>2001)												
1.3,1.3 i	*6U1/334/335/372/374/384 435/444/474/484, 6U5/334 335/344/374/384/414/434 435/444/474/484, 6U6/114 134/144/174/184, 6U7/114 144/174/184, EEA/613/614 673, EEG614, EEF/613/614 679, EFF/613/614/679*	E	1289	135, 135I, 136I, 135CP 13MPI68, AMG, 13MPI54, AMH AMJ	M			10/94 ▸	047121111A	**820595**	88	Y
1.3,1.3 i	*6U1/314/334/344/372/414 434/444, EEF614, EEA/413 414/613/614, EFF413, EEG 413/614*	E	1289	135, 136I, 135CP, AMG, 135I	M		☞8	10/94 ▸ 01/96	114095090	**819927**	88	Y
1.3,1.3 i	*6U1/314/334/344/372/414 434/444, EEF614, EEA/413 414/613/614, EFF413, EEG 413/614*	E	1289	136I, 135I, 135, 135CP, AMG	M		☞8	10/94 ▸ 07/95	113095090	**820541**	80	Y
1.3 i	*6U1/384/484*	E	1289	AMH	M			08/96 ▸ 12/97	032121110B	**820962**	87	Y
1.6 i	*6U1/3G4/4G4, 6U61G4, 6U71G4, 6UFFG4 EGF615, 6U5/3G4/4G4*	E	1598	AEE, 16MPI	M			05/95 ▸ 12/97	032121110B	**820962**	87	Y
1.9 D	*6U1/3H4/4H4, 6U61H4, 6U71H4, 6U5 3H4/4H4, EHH/613/614/673/679*	D	1896	AEF	M		☞4	10/95 ▸ 12/97	044121113	**820168**	87	Y
Felicia (Facelift) (98>2001)												
1.3,1.3 i	*6U1/371/375/385/475/485 6U5/375/385/475/485, 6U6 135/175/185, 6UFF85, 6U7 135/175/185*	E	1289	AMH, AMG, AMJ	M	-		01/98 ▸	047121111A	**820595**	88	Y
1.6 i	*6U1/3C5/3G5/4C5/4G5, 6U5/3C5/3G5 4C5/4G5, 6U6/1C5/1G5, 6UFFG5, 6U7 1C5/1G5*	E	1598	AEE	M			07/95 ▸	032121110B	**820962**	87	Y
1.9 D	*6U1/3H5/4H5, 6U61H5, 6U71H5, 6UFFH5 6U5/3H5/4H5*	D	1896	AEF	M		☞4	01/98 ▸	044121113	**820168**	87	Y
Forman												
1.3		E	1289	135, 781135B	M		☞8	11/90 ▸	114095090	**819927**	88	Y
1.3		E	1289	135, 781135B	M		☞8	11/90 ▸	113095090	**820541**	80	Y
Octavia (96>2000)												
1.4 i	*1U21A4*	E	1390	AMD	M			02/99 ▸ 07/00	032121110B	**820962**	87	Y

• **New** Nouveau **Nuevo** Novo **Nuovo** Nieuw **Neu** Yeni Новый Nou

		E	1595	AEH	M			04/97 ▸	050121113C	**820171**	87	Y
1.6 i	*1U2/2E4/2L4/3L4, 1U5/1E4/1F4/2E4 2F4/3E4/3F4*											
1.6 i	*1U2/2L3/3L3, 1U5/2E3/2F3/2L3/3E3 3F3/3L3*	E	1595	AEH, AKL	A			06/97 ▸	050121113C	**820171**	87	Y
1.6 i	*1U51D4, 1U2/1D4/2D4*	E	1598	AEE	M			10/96 ▸	032121110B	**820962**	87	Y
1.8 i 20V,1.8 i Turbo 20V	*1U2/3P4/4Q4/4S4, 1U5/2R4 3Q4/3R4/4Q4/4S4*	E	1781	ARZ, AGU, AGN	M			10/96 ▸	050121113C	**820171**	87	Y
1.8 i 20V,1.8 i Turbo 20V	*1U2/3P3, 1U5/2P3/3P3/3Q3 4Q3*	E	1781	AGN, AGU	A			06/97 ▸	050121113C	**820171**	87	Y
2.0 i	*1U2/3N4, 1U5/2TX/3TX*	E	1984	AZH, ATF, AQY	M			05/99 ▸	050121113C	**820171**	87	Y
2.0 i	*1U23N3*	E	1984	AQY, APK	A			05/99 ▸	050121113C	**820171**	87	Y
1.9 SDi,1.9 TDi	*1U2/164/264/274/374/384 394/484/494, 1U5/164/274 27X/374/37X/384/484/494 774*	D	1896	AHF, AGP, AGR, ASV	M		☞4	10/96 ▸	044121113	**820168**	87	Y
1.9 TDi	*1U2383*	D	1896	AHF	A		☞4	08/97 ▸	044121113	**820168**	87	Y
1.4 i	*1U22A4, 1U21A4*	E	1390	AMD	M			08/00 ▸ 03/01	047121111P	●**820795**	88	Y
1.4 i 16V	*1U2/1B4/2B4, 1U5/1B4/2B4*	E	1390	BCA, AXP	M			08/00 ▸	032121110B	**820962**	87	Y
1.6 i	*1U2/1E3/1E4/1G4/2E4/3E4, 1U5/1E4 2E4/3E4*	E	1595	AKL, AEH, BFQ	M			08/00 ▸	050121113C	**820171**	87	Y
1.6 i	*1U21G4*	E	1595	BFQ	M			08/00 ▸	06A121111A	**820959**	100	Y
1.6 i	*1U2/1E3/2E3/2G3/3E3/3G3, 1U5/1E3 2E3/2G3/3E3/3G3*	E	1595	AKL, AEH, AVU	A			08/00 ▸	050121113C	**820171**	87	Y
1.6 i	*1U2/1G3/2G3/3G3, 1U5/1G3/2G3/3G3*	E	1595	BFQ	A			01/03 ▸	06A121111A	**820959**	100	Y
1.6 i	*1U2/1D4/2D4, 1U5/1D4/2D4*	E	1598	AEE	M			08/00 ▸ 09/04	050121113C	**820171**	87	Y
1.6 i	*1U2/1D4/2D4, 1U5/1D4/2D4*	E	1598	AEE	M			08/00 ▸ 09/04	032121110B	**820962**	87	Y
1.8 20V,1.8 i Turbo 20V	*1U2/1Q4/1QX/2Q4/2QX/3Q4 3QX/4Q4/4QX/5Q4/5R4/PQ4 1U5/1Q4/1QX/2Q4/2QX/3Q4 3QX/4Q4/4QX/5R4*	E	1781	AGU, ARZ, AUM, AUQ, ARX	M			08/00 ▸	050121113C	**820171**	87	Y
1.8 i Turbo 20V	*1U2/1Q3/2Q3/3Q3/4Q3, 1U5 1Q3/2Q3/3Q3/4Q3*	E	1781	AUM, AGU, ARX	A			08/00 ▸	050121113C	**820171**	87	Y
2.0 i	*1U2/1N4/1T4/2M4/2N4/2T4/3M4/3N4/3T4 1U5/1N4/1T4/1TX/2N4/2T4/2TX/3N4 3T4/3TX*	E	1984	AZJ, AEG, AQY, APK, AZH	M			08/00 ▸	050121113C	**820171**	87	Y
2.0 i	*1U2/1N3/1T3/2N3/2T3/3N3/3T3, 1U5 1N3/1T3/2N3/2T3/3N3/3T3*	E	1984	AEG, AZJ, APK, AQY	A			08/00 ▸	050121113C	**820171**	87	Y
1.9 D,1.9 TDi	*1U2/154/164/174/184/264 274/284/295/374/384/395 474/484/495/P84, 1U5/154 15Y/164/174/184/25Y/264 274/27X/284/295/35Y/374 37X/384/394/395/484/495*	D	1896	ASZ, AGR, AXR, ASV, ALH, AHF ATD, AQM	M		☞4	08/00 ▸	044121113	**820168**	87	Y
1.9 TDi	*1U2/173/273/373/473, 1U5 173/273/373*	D	1896	ALH	A		☞4	08/00 ▸	044121113	**820168**	87	Y
1.4 i 16V	*1Z3/1B4/1C4/2B4/2C4, 1Z5 1B4/1C4/2B4/2C4*	E	1390	BUD, BCA	M			05/04 ▸	032121110B	**820962**	87	Y
1.6 i	*1Z3/1G4/2G4/3G4, 1Z5/1G4/2G4/3G4*	E	1595	BSF, BGU, BSE	M			05/04 ▸	050121113C	**820171**	87	Y
1.6 i	*1Z3/1GC/2GC/3GC, 1Z5/1GC/2GC/3GC*	E	1595	BSE, BSF, BGU	A			08/04 ▸	050121113C	**820171**	87	Y
2.0 FSi 16V	*1Z32NC, 1Z52NC, 1Z33NC 1Z53NC*	E	1984	BLR,BLY	A			11/04 ▸ 11/05	06F121111	**820576**	105	Y
2.0 FSi 16V,2.0 TFSi 16V	*1Z32N5, 1Z33N5, 1Z53N5 1Z5ANY, 1Z35R5, 1Z52N5*	E	1984	BLR,BLX,BLY,BWA	M			11/04 ▸	06F121111	**820576**	105	Y
1.9 TDi	*1Z3/154/164/254/264/354 364, 1Z5/154/164/254/264 354/364/A5Y/A6Y/B5Y/B6Y*	D	1896	BLS/F, BXE, BJB, BKC	M		☞4	05/04 ▸	044121113	**820168**	87	Y
1.9 TDi	*1Z3/15C/16C/25C/26C/35C 36C, 1Z5/15C/16C/25C/26C 35C/36C*	D	1896	BLS/F, BXE, BKC	A		☞4	08/04 ▸	044121113	**820168**	87	Y

SKODA (.../...)

Octavia (96>2000) (.../...)

Octavia (2000>2004)

Octavia (2004>)

• **New** Nouveau **Nuevo** Novo **Nuovo** Nieuw **Neu** Yeni Новый Nou

Type Ctr.		cc		AC		2 3	OE	Valeo	(°)C	
SSANGYONG (.../...)										
Korando (.../...)										
2.9 TD	D	2874	OM662D29	A		03/99 ▸	6062030275	**819970**	85	Y
Kyron (2005>2007)										
2.0 XDi 16V	D	1998	XDI200	M		11/05 ▸ 09/07	6062030275	**819970**	85	Y
2.0 XDi 16V	D	1998	XDI200	A		11/05 ▸ 09/07	6062030275	**819970**	85	Y
Musso										
2.3 D	D	2299	OM601D23	M		08/93 ▸ 03/99	6062030275	**819970**	85	Y
2.9 D *EOA14SM*	D	2874	OM602D29	M		☞2,5 08/93 ▸	6062030275	**819970**	85	Y
Rexton										
3.2 i 24V	E	3199	M104.981E32	M		☞8 04/02 ▸ 2004	0022037675	**819873**	87	Y
3.2 i 24V	E	3199	M104.981E32	A		☞8 08/04 ▸ 2004	0022037675	**819873**	87	Y
2.9 TDi,2.9 XDi	D	2874	OM60129TD	M		2003 ▸	6062030275	**819970**	85	Y
2.9 XDi	D	2874	OM60129TD	A		08/04 ▸	6062030275	**819970**	85	Y
Rodius										
2.7 Xdi 20V	D	2696	OM662LA	M		05/05 ▸	6062030275	**819970**	85	Y
2.7 Xdi 20V	D	2696	OM662LA	A		05/05 ▸	6062030275	**819970**	85	Y
SUBARU										
E12 (FA) (93>)										
1.2 i *FA7, FA8*	E	1189	EF12EN,EF12ER	M		05/93 ▸ 09/94	417535700	**819842**	80	Y
1.2 i *FA8, FA7*	E	1189	EF12EF, EF12ER, EF12EN EF12EX	M		☞7,8 10/94 ▸	21200KA152	**820509**	85	Y
Justy										
1.0 *KA5, KA6, KD6, KD5*	E	997	EF10NF1	M		06/86 ▸ 05/95	21200KA050	**820438**	82	Y
1.0 *KD5, KA5*	E	997	EF10NF1	A		10/87 ▸ 04/95	21200KA050	**820438**	82	Y
1.2 *KD7, KA7, KD8, KA8, KG7, KG8, KD5*	E	1189	EF12,EF12AT,EF12AW	M		06/86 ▸ 06/95	21200KA050	**820438**	82	Y
1.2 *KD7, KA7, KD8, KA8, KD5, KG7*	E	1189	EF12,EF12AT,EF12AW	A		08/88 ▸ 06/95	21200KA050	**820438**	82	Y
1.3 i *MAF, MAG*	E	1298	G13BA	M		10/95 ▸ 10/03	1760085821	**820042**	88	Y
Leone (79>84)										
1300	E	1298	EA65-61	M		10/79 ▸ 06/84	21200AA010	**819966**	82	Y
1.6 i,1600,1600 i	E	1595	EA71-86	M		06/79 ▸ 11/84	21200AA010	**819966**	82	Y
1.8 i,1800	E	1781	EA81-80,EA81-82	M		06/79 ▸ 11/84	21200AA010	**819966**	82	Y
Leone II (84>91)										
1.3	E	1298	EA65-65	M		07/84 ▸ 08/89	21200AA010	**819966**	82	Y
1.6	E	1595	EA71-74	M		07/84 ▸ 08/89	21200AA010	**819966**	82	Y
1.8,1.8 i,1.8 i Turbo	E	1781	EA81-80,EA82-105,EA82-90 EA82-98,EA82T-120,EA82T-131 EA82T-136	M		07/84 ▸ 08/89	21200AA010	**819966**	82	Y
Vanille										
1.2 i *FA8*	E	1189	EF12ER	M		06/94 ▸ 09/94	417535700	**819842**	80	Y
1.2 i *FA8*	E	1189	EF12ER	M		☞7,8 10/94 ▸	21200KA152	**820509**	85	Y
Vivio										
660 *KK3, KW3*	E	658	EN07AEC,EN07ERC	A		03/92 ▸	417535700	**819842**	80	Y
660 *KK3, KK4, KW4, KW3*	E	658	EN07A2M,EN07AFM,EN07ERM EN07ERW	M		03/92 ▸	417535700	**819842**	80	Y
XT Coupé										
1800 Turbo *AX7, AX4*	E	1781	EA82T-131,EA82T-136	M		09/85 ▸ 1990	21200AA010	**819966**	82	Y
1800 Turbo *AX7, AX4*	E	1781	EA82T-131	A		01/87 ▸ 1990	21200AA010	**819966**	82	Y
SUZUKI										
Alto (SS80)										
0.8 *SS80F*	E	796	F8A	M		☞7,8 10/80 ▸ 09/85	1767085811	**820438**	82	Y

• **New** Nouveau **Nuevo** Novo **Nuovo** Nieuw **Neu** Yeni Новый Nou

SUZUKI (.../...)

Alto (SS80) (.../...)

0.8	*SS80A*	E	796	F8A	A		☞7,8	10/80 ▸ 09/85	1767085811	**820438**	82	Y

Alto (SB30*)

0.8	*ECA91, ECB91*	E	796	F8B	M		☞7,8	10/85 ▸ 02/94	1767082000	**820438**	82	Y
0.8	*ECA91, ECB91*	E	796	F8B	A		☞7,8	10/85 ▸ 02/94	1767082000	**820438**	82	Y

Alto (SH410)

1.0	*HCJ73, HCN73*	E	993	G10B, G10B-58	M		☞7,8	03/94 ▸	17670M85030	**820438**	82	Y

Alto (RB410)

1.1 i		E	1061	F10D	M		☞7,8	06/02 ▸	17670M85030	**820438**	82	Y
1.1 i		E	1061	F10D	A		☞7,8	06/02 ▸	17670M85030	**820438**	82	Y

Baleno

1.3 i 16V	*GC11S, 2GA21, GA11S AEGC1, AEGA1*	E	1298	G13BB	M			04/95 ▸ 2002	1767050G10	**820042**	88	Y
1.5 i 16V	*AEGC2*	E	1493	G15A	M			04/95 ▸ 2002	1767050G10	**820042**	88	Y
1.6 i 16V	*AEGD3, 3GB31, 2GA31 AEGC3, GC31S, AEGA3 GC31W, GA31S, AEGB3*	E	1590	G16B	M			04/95 ▸ 2002	1767050G10	**820042**	88	Y
1.9 TD	*AEGC5*	D	1905	XUD9T	M		☞4	12/99 ▸	1767066G00	**819950**	83	Y

Cappuccino

0.7	*EEA11*	E	657	F6A-T	M		☞7,8	01/91 ▸ 03/98	1760085811	**820438**	82	Y

Grand Vitara (98>2005)

2.0 HDi	*JSAFT*	D	1997	RHZ	M		☞4	01/01 ▸ 02/05	1767066G00	**819950**	83	Y
2.0 HDi	*JSAFT*	D	1997	RHZ	A		☞4	01/01 ▸ 02/05	1767066G00	**819950**	83	Y
2.0 TD	*JSAFT*	D	1998	RFM	M			05/98 ▸	1760078E00	**820072**	88	Y
2.0 TD	*JSAFT*	D	1998	RFM	A			05/98 ▸	1760078E00	**820072**	88	Y

Ignis FL (RM)

1.3 DDiS 16V	*RM413*	D	1248	D13A	M			09/03 ▸	1769084E50	**820563**	88	Y

Jimny

1.3 i	*FJB33, FJA33*	E	1298	G13BB	A			09/98 ▸	1767050G10	**820042**	88	Y
1.3 i	*FJB33, FJA33*	E	1298	G13BB	M			09/98 ▸	1767050G10	**820042**	88	Y

Swift (SA) (83>88)

1.0,1.0 Turbo	*AA43F, AA41F, AB41S AA41S, AA43S*	E	993	G10, G10T	M		☞7,8	10/83 ▸ 02/89	1767082000	**820438**	82	Y
1.0	*AA41F, AA43F*	E	993	G10	A		☞7,8	10/84 ▸ 02/89	1767082000	**820438**	82	Y
1.3 16V	*AA31F, AA31S*	E	1298	G13DOHC	M		☞7,8	08/84 ▸ 01/88	1767082000	**820438**	82	Y
1.3	*AA51S*	E	1324	G13A	M		☞7,8	08/84 ▸ 01/88	1767082000	**820438**	82	Y
1.3	*AA51F*	E	1324	G13A	A		☞7,8	08/84 ▸ 01/88	1767082000	**820438**	82	Y

Swift (SF) (89>)

1.6 i 16V	*SF416*	E	1590	G16B	M		☞7,8	01/90 ▸ 03/92	1767085811	**820438**	82	Y

Swift II RS (HUN)

1.3 DDiS 16V	*HZN4A, HZK4A*	D	1248	D13A	M			04/05 ▸	1769084E50	**820563**	88	Y

Swift SF (HUN)

1.0 i	*MAA44, MAB44*	E	993	G10A	A			01/95 ▸ 08/96	1767050G10	**820042**	88	Y
1.0 i	*MAA44, MAB44*	E	993	G10A	M			01/95 ▸ 08/96	1767050G10	**820042**	88	Y
1.3 i	*MAB35, MAA35*	E	1298	G13BAK	A			01/95 ▸ 08/96	1760085821	**820042**	88	Y
1.3 i	*MAA35, MAH35, MAB35*	E	1298	G13BAK	M			01/95 ▸ 08/96	1760085821	**820042**	88	Y

Swift SF (JPN)

1.0,1.0 i	*EAB44, EAA44*	E	993	G10,G10A	A			03/89 ▸ 08/96	1767050G10	**820042**	88	Y
1.0,1.0 i	*EAB44, EAA44*	E	993	G10,G10A	M			03/89 ▸ 08/96	1767050G10	**820042**	88	Y
1.3,1.3 i	*EAA35, EAB35, EAH35*	E	1298	G13B,G13BA	A			03/89 ▸ 08/96	1767050G10	**820042**	88	Y

• **New** Nouveau **Nuevo** Novo **Nuovo** Nieuw **Neu** Yeni Новый Nou

Type Ctr.		cc		AC			OE	Valeo	(°)C	
SUZUKI (.../...)										
Swift SF (JPN) (.../...)										
1.3,1.3 i *EAH35, EAA35, EAB35 EAF35*	E	1298	G13B,G13BA,G13BAK4WD	M			03/89 ▸ 08/96	1767050G10	**820042**	88	Y
Vitara										
1.9 D *ET*	D	1905	XUD9	M		☞4	01/96 ▸	1757086CA0	**819950**	83	Y
2.0 TD *ETD31*	D	1998	RF	A			01/96 ▸	1760078E00	**820072**	88	Y
Wagon R										
1.0 i 16V *JSAEM* ▸301105	E	997	K10A	M		☞7,8	03/97 ▸	1767076G00	**820438**	82	Y
1.0 i 16V *JSAEM* ▸301105	E	997	K10A	A		☞7,8	03/97 ▸	1767076G00	**820438**	82	Y
1.2 i 16V *JSAEM*	E	1171	K12A	A		☞7,8	09/98 ▸	1767076G00	**820438**	82	Y
1.2 i 16V *JSAEM* ▸200000	E	1171	K12A	M		☞7,8	09/98 ▸	1767076G00	**820438**	82	Y
Wagon R+										
1.3 i 16V *TSMMM*	E	1298	G13BB	A			03/00 ▸ 2008	1767050G10	**820042**	88	Y
1.3 i 16V	E	1298	G13BB	M			03/00 ▸ 2008	1767050G10	**820042**	88	Y
X90										
1.6 16V *LAC66*	E	1590	G16BA	M		☞7,8	11/95 ▸	1760060813	**819942**	82	Y
1.6 16V *LAC69*	E	1590	G16BA	A		☞7,8	11/95 ▸	1760060813	**819942**	82	Y
1.6 16V *LAC69*	E	1590	G16BA	A			11/95 ▸	1760060823	•**820767**	88	Y
1.6 16V *LAC66*	E	1590	G16BA	M			11/95 ▸	1760060823	•**820767**	88	Y
SUZUKI										
Carry										
550 *LJ50*	E	543	F5A	M		☞7,8	09/76 ▸ 12/78	1760085831	**819942**	82	Y
800 *ST80*	E	796	F8A	M		☞7,8	1978 ▸ 1980	1760085831	**819942**	82	Y
Carry (ST90)										
0.8 *ST90*	E	796	F8A	M		☞7,8	11/80 ▸ 10/85	1760085831	**819942**	82	Y
Carry (GA4*)										
1.3 i *JSAFD* ▸116078	E	1298	G13BB-E6	M		☞7,8	07/99 ▸	1767050G00	**820438**	82	Y
LJ80										
0.8 *JA11V, JA11T, JA11C, JA11Q*	E	796	F8A	M		☞7,8	10/78 ▸ 1981	1760085831	**819942**	82	Y
Super Carry (SK4*)										
660 i,660 i Turbo	E	657	F6A, F6A-T	M		☞7,8	1990 ▸	1760085831	**819942**	82	Y
0.8 *SK408*	E	796	F8A	M		☞7,8	04/85 ▸ 01/99	1760085831	**819942**	82	Y
1.0 *DA21T, DA21V*	E	970	F10A, F10AC	M		☞7,8	04/85 ▸ 01/99	1760085831	**819942**	82	Y
TALBOT										
Horizon										
1.1 *21A-0, T2-DF*	E	1118	E1A, E1	M			01/78 ▸ 07/85	133797	**819889**	89	Y
1.1 *21A-0, T2-DF*	E	1118	E1,E1A	M			01/78 ▸ 07/85	133753	**819863**	83	Y
1.3 *21A-1, S2-DG, T2-DG*	E	1294	G1E, G1A, G1D, G2S, G1	M			01/78 ▸ 07/85	133797	**819889**	89	Y
1.3 *21A-1, T2-DG, S2-DG*	E	1294	G1,G1A,G1D,G1E,G2S	M			01/78 ▸ 07/85	133753	**819863**	83	Y
1.4 *21A-2, T2-DH, T2-DJ, S2-DJ, S2-DH*	E	1442	Y2, Y1B, Y1, TALB04, Y2S	M			10/78 ▸ 1986	133797	**819889**	89	Y
1.4 *21A-2, T2-DJ*	E	1442	Y2, Y2S	A			07/79 ▸ 1986	133797	**819889**	89	Y
1.4 *21A-2, S2-DJ, S2-DH, T2-DJ, T2-DH*	E	1442	TALB04,Y1,Y1B,Y2,Y2S	M			10/78 ▸ 1986	133753	**819863**	83	Y
1.6 *21A-6, 21A-3, 21A-4*	E	1592	J2A, J1B, J2S	M			07/82 ▸ 1986	133797	**819889**	89	Y
1.6 *21A-3*	E	1592	J2S, J2A	A			07/83 ▸ 07/84	133797	**819889**	89	Y
1.6 *21A-3*	E	1592	J2A,J2S	A			07/83 ▸ 07/84	133753	**819863**	83	Y
1.6 *21A-3, 21A-4, 21A-6*	E	1592	J1B,J2A,J2S	M			07/82 ▸ 1986	133753	**819863**	83	Y
1.7 D *21A-5*	D	1769	XUD7	M			07/83 ▸ 06/85	133797	**819889**	89	Y

• **New** Nouveau **Nuevo** Novo **Nuovo** Nieuw **Neu** Yeni Новый Nou

		Type Ctr.		cc		AC			OE	Valeo	(°)C	
TALBOT (.../...)												
Horizon (.../...)												
1.7 D	*21A-5*	D	1769	XUD7	M			07/83 ▸ 06/85	133753	**819863**	83	Y
1.9 D	*21A-5*	D	1905	XUD9	M			07/82 ▸ 1986	133797	**819889**	89	Y
1.9 D	*21A-5*	D	1905	XUD9	M			07/82 ▸ 1986	133753	**819863**	83	Y
Samba												
1.0	*51A-5, 51A-6*	E	954	XV8, XV5	M		☞4	01/81 ▸ 1985	133837	**819946**	83	Y
1.1	*51A-6, 51E-6, 51A-5, 51A-7, 51F-6*	E	1124	XW7	M		☞4	01/81 ▸ 1985	133837	**819946**	83	Y
1.2	*51A-6*	E	1219	XZ7R	M		☞4	1983 ▸ 1985	133837	**819946**	83	Y
1.4	*51A-6, 51E-6*	E	1360	XY8, XY6B, XY6, XY7	M		☞4	01/81 ▸ 1985	133837	**819946**	83	Y
TOYOTA												
1000 (Publica)												
1.0	*KP36L, KP36, KP30R, KP30L, KP36V KP36LV*	E	993	2K	M		☞8	04/69 ▸	9091603034	**819875**	87	Y
1.0	*KP36, KP36V, KP30R, KP36LV, KP30L KP36L*	E	993	2K	M		☞4,8	04/69 ▸	9091603083	**820172**	82	Y
1.0	*KP36, KP36L*	E	993	2K	M			11/75 ▸ 02/78	9091603078	**820439**	88	Y
1.2	*KP37RK*	E	1166	3K-H	M		☞8	07/77 ▸ 08/81	9091603034	**819875**	87	Y
1.2	*KP37RK*	E	1166	3K-H	M		☞4,8	07/77 ▸ 08/81	9091603083	**820172**	82	Y
4 Runner (60)												
2.0	*YN60RG, YN60LG*	E	1998	3Y-C, 3Y	M			03/84 ▸ 08/85	9091603090	**820510**	82	Y
2.2 i	*YN63RG*	E	2236	4Y, 4Y-C	M			08/85 ▸ 12/89	9091603090	**820510**	82	Y
2.2 i	*YN63RG*	E	2236	4Y-E	A			08/85 ▸ 12/89	9091603090	**820510**	82	Y
2.4 i	*RN61LG*	E	2366	22R-EC	M			12/87 ▸ 12/89	9091603078	**820439**	88	Y
2.4 D	*LN61RG*	D	2446	2L	M		☞4,8	08/85 ▸ 12/89	9091603099	**820174**	88	Y
4 Runner (130)												
3.0 i	*VZN130*	E	2959	3VZ-E	M		☞4,9	08/89 ▸ 11/95	9091603079	**820545**	82	Y
3.0 i	*VZN130*	E	2959	3VZ-E	A		☞4,9	08/90 ▸ 11/95	9091603079	**820545**	82	Y
3.0 TD	*KZN130*	D	2982	1KZ-T	M			08/93 ▸ 11/95	9091603118	**820511**	82	Y
4 Runner (180)												
2.7 i	*RZN185, RZN180*	E	2694	3RZ-FE	M		☞4,9	11/95 ▸ 08/00	9091603120	**820516**	82	Y
2.7 i	*RZN185, RZN180*	E	2694	3RZ-FE	A		☞4,9	11/95 ▸ 08/00	9091603120	**820516**	82	Y
3.4 i V6	*VZN180, VZN185*	E	3378	5VZ-FE	A			11/95 ▸ 08/02	9091603075	**820512**	82	Y
3.4 i V6	*VZN185*	E	3378	5VZ-FE	M			11/95 ▸ 08/00	9091603075	**820512**	82	Y
Auris												
1.4 VVT-i 16V	*ZZE150*	E	1398	4ZZFE-HTWC	M		☞4,9	10/06 ▸	9091603129	**820136**	82	Y
1.6 VVT-i 16V	*ZRE151*	E	1598	1ZRFE-HTWC	M		☞4,9	02/07 ▸	9091603129	**820136**	82	Y
1.6 VVT-i 124 16V	*ZRE151*	E	1598	1ZRFE-HTWC	M			10/06 ▸ 12/08	9091603125	**820512**	82	Y
1.4 D-4D	*NDE150*	D	1364	1NDTV-DCR	M		☞4,9	10/06 ▸	9091603093	**820173**	82	Y
2.0 D-4D	*ADE150*	D	1998	1ADFTV-DCR,1ADFTV-DCRL/F	M			02/07 ▸ 01/10	9091603125	**820512**	82	Y
2.2 D-4D	*ADE157*	D	2231	2ADFHV-DCRL	M			02/07 ▸ 01/10	9091603125	**820512**	82	Y
2.0 D-4D	*ADE150*	D	1998	1ADFTV-DCR,1ADFTV-DCRL/F	M			10/06 ▸ 01/09	9091603125	**820512**	82	Y
Avensis (97>2000)												
1.6 i 16V	*AT220L*	E	1587	4A-FEC	M			11/97 ▸ 06/00	9091603090	**820510**	82	Y
1.8 i 16V	*AT221L*	E	1762	7A-FE	M			11/97 ▸ 06/00	9091603090	**820510**	82	Y
1.8 i 16V	*AT221L*	E	1762	7A-FE	A			11/97 ▸ 06/00	9091603090	**820510**	82	Y
2.0 i 16V	*ST220L*	E	1998	3S-FE	M			11/97 ▸	9091603090	**820510**	82	Y
2.0 TD	*CT220L*	D	1974	2C-T, 2C-TE	M			11/97 ▸ 06/00	9091603090	**820510**	82	Y
2.0 D-4D 16V	*CDT220*	D	1995	1CDFTV-HDCR	M		☞4,9	08/99 ▸ 06/00	9091603123	**820173**	82	Y
Avensis (2000>2003)												
1.6 VVTi 16V	*ZZT220*	E	1598	3ZZ-FE	M			07/00 ▸ 01/03	9091603125	**820512**	82	Y
1.8 i 16V	*ZZT221*	E	1794	1ZZ-FE	A			07/00 ▸ 01/03	9091603125	**820512**	82	Y
1.8 i 16V	*ZZT221*	E	1794	1ZZ-FE	M			07/00 ▸ 01/03	9091603125	**820512**	82	Y
2.0 D4 16V	*AZT220*	E	1998	1AZ-FSE	A			10/00 ▸ 01/03	9091603084	**820512**	82	Y
2.0 D4 16V	*AZT220*	E	1998	1AZ-FSE	M			07/00 ▸ 01/03	9091603084	**820512**	82	Y
2.0 D4 16V	*AZT220*	E	1998	1AZ-FSE	M		☞4,9	07/00 ▸ 01/03	9091603129	**820136**	82	Y

• **New** Nouveau **Nuevo** Novo **Nuovo** Nieuw **Neu** Yeni Новый Nou

			Type Ctr.		cc			AC		2	OE	Valeo	(°)C
TOYOTA (.../...)													
Avensis (2000>2003) (.../...)													
2.0 D4 16V	*AZT220*	E	1998	1AZ-FSE	A		☞4,9	10/00 ▸ 01/03	9091603129	**820136**	82	Y
2.0 D-4D 16V	*CDT220*	D	1995	1CDFTV-HDCR	M		☞4,9	07/00 ▸ 01/03	9091603123	**820173**	82	Y
Avensis (2003>2008)													
1.6 VVTi 16V	*ZZT250*	E	1598	3ZZ-FE	M			01/03 ▸ 11/08	9091603125	**820512**	82	Y
1.8 VVTi 16V	*ZZT251*	E	1794	1ZZ-FE	A			01/03 ▸ 11/08	9091603125	**820512**	82	Y
1.8 VVTi 16V	*ZZT251*	E	1794	1ZZ-FE	M			01/03 ▸ 11/08	9091603125	**820512**	82	Y
2.0 D-4 16V,2.0 VVTi 16V	*AZT250*	E	1998	1AZ-FE,1AZ-FSE	A			01/03 ▸	9091603084	**820512**	82	Y
2.0 D-4 16V,2.0 VVTi 16V	*AZT250*	E	1998	1AZ-FE,1AZ-FSE	M			01/03 ▸	9091603084	**820512**	82	Y
2.0 D-4 16V,2.0 VVTi 16V	*AZT250*	E	1998	1AZ-FSE, 1AZ-FE	M		☞4,9	01/03 ▸	9091603129	**820136**	82	Y
2.0 D-4 16V,2.0 VVTi 16V	*AZT250*	E	1998	1AZ-FSE, 1AZ-FE	M		☞4,9	01/03 ▸	9091603127	**820533**	88	Y
2.0 D-4 16V,2.0 VVTi 16V	*AZT250*	E	1998	1AZ-FE, 1AZ-FSE	A		☞4,9	01/03 ▸	9091603127	**820533**	88	Y
2.0 D-4 16V,2.0 VVTi 16V	*AZT250*	E	1998	1AZ-FSE, 1AZ-FE	A		☞4,9	01/03 ▸	9091603129	**820136**	82	Y
2.4 VVTi 16V	*AZT251*	E	2362	2AZ-FSE	A		☞4,9	09/03 ▸	9091603129	**820136**	82	Y
2.4 VVTi 16V	*AZT251*	E	2362	2AZ-FSE	A		☞4,9	09/03 ▸	9091603127	**820533**	88	Y
2.4 VVTi 16V	*AZT251*	E	2362	2AZ-FSE	A			09/03 ▸	9091603084	**820512**	82	Y
2.0 D-4D 16V	*CDT250*	D	1995	1CDFTV-DCRL	M		☞4,9	03/03 ▸ 04/06	9091603123	**820173**	82	Y
2.0 D-4D 16V	*ADT250*	D	1998	1ADFTV-DCR	M			05/06 ▸ 11/08	9091603125	**820512**	82	Y
2.2 D-4D 16V	*ADT251*	D	2231	2AD-FTV,2ADFHV-DCRL	M			04/05 ▸ 11/08	9091603125	**820512**	82	Y
Avensis (2008>)													
2.0 D-4D 126 16V	*ADT270*	D	1998	1ADFTV-DCR	M			11/08 ▸ 11/11	9091603125	**820512**	82	Y
2.2 D-4D 177 16V	*ADT271*	D	2231	2ADFHV-DCRL	A			02/09 ▸ 11/11	9091603125	**820512**	82	Y
2.2 D-4D 150 16V 2.2 D-4D 177 16V	*ADT271*	D	2231	2AD-FTV,2ADFHV-DCRL	M			11/08 ▸ 11/11	9091603125	**820512**	82	Y
Avensis Verso (2001>)													
2.0 VVTi 16V	*ACM20L, ACM20R*	E	1998	1AZ-FE	M		☞4,9	05/01 ▸	9091603129	**820136**	82	Y
2.0 VVTi 16V	*ACM20L, ACM20R*	E	1998	1AZ-FE	A		☞4,9	05/01 ▸	9091603129	**820136**	82	Y
2.0 VVTi 16V	*ACM20R, ACM20L*	E	1998	1AZ-FE	A			05/01 ▸	9091603084	**820512**	82	Y
2.0 VVTi 16V	*ACM20L, ACM20R*	E	1998	1AZ-FE	M			05/01 ▸	9091603084	**820512**	82	Y
2.0 D-4D 16V	*CLM20R, CLM20L*	D	1995	1CDFTV-HDCR	M		☞4,9	05/01 ▸	9091603123	**820173**	82	Y
Camry (82>86)													
1.8	*SV10LU, SV10RU*	E	1832	1S-L	M			10/82 ▸ 10/86	9091603090	**820510**	82	Y
1.8	*SV10RU, SV10LU*	E	1832	1S-L	A			10/82 ▸ 10/86	9091603090	**820510**	82	Y
2.0 i	*SV11LU, SV11RU*	E	1995	2S-ELC, 2S-EL	M			03/83 ▸ 10/86	9091603090	**820510**	82	Y
2.0 i	*SV11LU, SV11RU*	E	1995	2S-ELC, 2S-EL	A			03/83 ▸ 10/86	9091603090	**820510**	82	Y
1.8 TD	*CV10LU, CV10RU*	D	1839	1C-TL	M			08/83 ▸ 08/85	9091603090	**820510**	82	Y
1.8 TD	*CV10LU, CV10RU*	D	1839	1C-TL	A			08/83 ▸ 08/85	9091603090	**820510**	82	Y
2.0 TD	*CV11LU, CV11RU*	D	1974	2C-TL	M			08/85 ▸ 10/86	9091603090	**820510**	82	Y
2.0 TD	*CV11LU*	D	1974	2C-TL	A			08/85 ▸ 10/86	9091603090	**820510**	82	Y
Camry (86>91)													
1.8	*SV20LG, SV20LU*	E	1832	1S-L	M			10/86 ▸ 08/88	9091603090	**820510**	82	Y
1.8	*SV20LU*	E	1832	1S-L	A			10/86 ▸ 08/88	9091603090	**820510**	82	Y
2.0 i	*SV21LG, SV21LU, SV25LU*	E	1996	3S-FE	M			10/86 ▸ 06/91	9091603090	**820510**	82	Y
2.0 i	*SV21LG, SV21LU*	E	1996	3S-FE	A			10/86 ▸ 06/91	9091603090	**820510**	82	Y
2.0 i 16V	*SV21LG, SV21RG, SV21RU SV25LU, SV21LU, SV25RU*	E	1998	3S-FE	M			10/86 ▸ 06/91	9091603090	**820510**	82	Y
2.0 i 16V	*SV21RG, SV21LU, SV21LG SV21RU*	E	1998	3S-FE	A			10/86 ▸ 06/91	9091603090	**820510**	82	Y
2.5 i V6	*VZV21L, VZV21R*	E	2507	2VZ-FE	A			02/88 ▸ 06/91	9091603075	**820512**	82	Y
2.5 i V6	*VZV21L*	E	2507	2VZ-FE	M			02/88 ▸ 06/91	9091603075	**820512**	82	Y
2.0 TD	*CV20LU, CV20RG, CV20LG CV20RU*	D	1974	2C-TL	M			10/86 ▸ 06/91	9091603090	**820510**	82	Y
Camry (91>96)													
2.2 i 16V	*SXV10R, SXV10L*	E	2164	5S-FE	M			06/91 ▸ 08/96	9091603090	**820510**	82	Y
2.2 i 16V	*SXV10R, SXV10L*	E	2164	5S-FE	A			06/91 ▸ 08/96	9091603090	**820510**	82	Y
3.0 i V6	*VCV10L, VCV10R*	E	2959	3VZ-FE	A			06/91 ▸ 08/96	9091603075	**820512**	82	Y
3.0 i V6	*VCV10L*	E	2959	3VZ-FE	M			06/91 ▸ 08/96	9091603075	**820512**	82	Y
Camry (96>2001)													
2.2 i 16V	*SXV20R, SXV20L*	E	2164	5S-FE	M			08/96 ▸ 07/01	9091603090	**820510**	82	Y

• **New** Nouveau **Nuevo** Novo **Nuovo** Nieuw **Neu** Yeni Новый Nou

Type Ctr.	E	CC		AC		2-3	OE	Valeo	(°)C	

TOYOTA (.../...)

Camry (96>2001) (.../...)

2.2 i 16V	SXV20R, SXV20L	E	2164	5S-FE	A			08/96 ▸ 07/01	9091603090	**820510**	82	Y
3.0 i V6 24V	MCV20L, MCV20R	E	2995	1MZ-FE	A		☞4,9	08/96 ▸ 07/01	9091603129	**820136**	82	Y
3.0 i V6 24V	MCV20R, MCV20L	E	2995	1MZ-FE	A			08/96 ▸ 07/01	9091603084	**820512**	82	Y

Camry (2001>2006)

2.0 i 16V	ACV31R, ACV31L	E	1998	1AZ-FE	A		☞4,9	08/01 ▸ 01/06	9091603129	**820136**	82	Y
2.0 i 16V	ACV31R, ACV31L	E	1998	1AZ-FE	A			08/01 ▸	9091603084	**820512**	82	Y
2.4 i 16V	ACV30R, ACV30L	E	2362	2AZ-FE	M		☞4,9	08/01 ▸ 01/06	9091603129	**820136**	82	Y
2.4 i 16V	ACV30L, ACV30R	E	2362	2AZ-FE	A		☞4,9	08/01 ▸ 01/06	9091603129	**820136**	82	Y
2.4 i 16V	ACV30L, ACV30R	E	2362	2AZ-FE	A			08/01 ▸	9091603084	**820512**	82	Y
2.4 i 16V	ACV30L, ACV30R	E	2362	2AZ-FE	M			08/01 ▸	9091603084	**820512**	82	Y
3.0 i V6 24V	MCV30R, MCV30L	E	2995	1MZ-FE	A		☞4,9	08/01 ▸ 01/06	9091603129	**820136**	82	Y
3.0 i V6 24V	MCV30R, MCV30L	E	2995	1MZ-FE	A			08/01 ▸	9091603084	**820512**	82	Y

Carina (TA6*) (81>83)

1.8 D	CA60LG, CA60LA, CA60RA	D	1839	1C	M			04/82 ▸ 09/83	9091603090	**820510**	82	Y

Carina II (ST17*) (87>92)

1.6,1.6 i 16V	AT171L, AT171R	E	1587	4A-F, 4A-FEC, 4A-FC	M			12/87 ▸ 11/92	9091603090	**820510**	82	Y
1.6,1.6 i 16V	AT171R, AT171L	E	1587	4A-F, 4A-FC, 4A-FEC	A			12/87 ▸ 03/92	9091603090	**820510**	82	Y
2.0 i 16V	ST171R, ST171L	E	1998	3S-FE, 3S-FEC	M			12/87 ▸ 03/92	9091603090	**820510**	82	Y
2.0 i 16V	ST171R, ST171L	E	1998	3S-FE, 3S-FEC	A			12/87 ▸ 03/92	9091603090	**820510**	82	Y
2.0 D	CT170L, CT170R	D	1974	2C	M			12/87 ▸ 11/92	9091603090	**820510**	82	Y

Carina E (92>97)

1.6 i 16V	AT190R, AT190L	E	1587	4A-FE	M			12/92 ▸ 12/97	9091603090	**820510**	82	Y
1.6 i 16V	AT190R, AT190L	E	1587	4A-FE	A			12/92 ▸ 12/97	9091603090	**820510**	82	Y
1.8 i 16V	AT191L, AT191R	E	1762	7A-FE	M			12/94 ▸ 10/97	9091603090	**820510**	82	Y
1.8 i 16V	AT191R, AT191L	E	1762	7A-FE	A			01/96 ▸ 10/97	9091603090	**820510**	82	Y
2.0 i 16V	ST191L, ST191R	E	1998	3S-FE	M			02/92 ▸ 10/97	9091603090	**820510**	82	Y
2.0 i 16V	ST191L	E	1998	3S-GE	M		☞4,9	02/92 ▸ 01/96	9091603100	**820513**	82	Y
2.0 i 16V	ST191R, ST191L	E	1998	3S-FE	A			02/92 ▸ 10/97	9091603090	**820510**	82	Y
2.0 i 16V	ST191L	E	1998	3S-GE	M			02/92 ▸ 02/94	9091603075	**820512**	82	Y
2.0 D,2.0 TD	CT190R, CT190L	D	1974	2C, 2C-T	M			10/94 ▸ 10/97	9091603090	**820510**	82	Y
2.0 TD	CT190L, CT190R	D	1974	2C-T	M		☞4,9	01/96 ▸ 10/97	9091603100	**820513**	82	Y

Celica (TA/RA4) (77>85)

2.0	RA40RB	E	1968	18R-C	M		☞4,8	08/77 ▸ 07/81	9091603083	**820172**	82	Y
2.0	RA40RB	E	1968	18R-C	A		☞4,8	08/77 ▸ 07/81	9091603083	**820172**	82	Y

Celica (TA/AA6) (77>85)

1.6 16V	AA63RB, AA63LB	E	1587	4A-GE	M			08/83 ▸ 07/85	9091603090	**820510**	82	Y
2.0	SA63RB	E	1995	2S-C	M			08/83 ▸ 08/84	9091603090	**820510**	82	Y
2.0	SA63RB	E	1995	2S-C	A			08/83 ▸ 08/84	9091603090	**820510**	82	Y

Celica (ST16) (85>89)

1.6 i 16V	AT160L	E	1587	4A-GELC, 4A-GEL	M			08/85 ▸ 08/89	9091603090	**820510**	82	Y

Celica (ST18) (89>93)

1.6 16V	AT180L, AT180R	E	1587	4A-FE	M			10/89 ▸ 10/93	9091603090	**820510**	82	Y
2.0 16V,2.0 Turbo	ST182R, ST185L, ST182L ST185R	E	1998	3S-GE, 3S-GTE	M			10/89 ▸ 10/93	9091603090	**820510**	82	Y
2.0 16V,2.0 Turbo	ST185R, ST182L, ST182R ST185L	E	1998	3S-GTE, 3S-GE	A			10/89 ▸ 10/93	9091603090	**820510**	82	Y

Celica (ST200) (93>99)

1.8 i 16V	AT200R, AT200L	E	1762	7A-FE	M			11/93 ▸ 07/99	9091603115	**820510**	82	Y
2.0 i,2.0 i Turbo	ST205L, ST202L, ST202R ST205R	E	1998	3S-GTE, 3S-GE1	M		☞4,9	11/93 ▸ 07/99	9091603100	**820513**	82	Y

Celica (ZT230) (99>)

1.8 VVT-i 16V	ZZT230	E	1794	1ZZ-FE	M		☞4,9	08/99 ▸ 07/00	9091603129	**820136**	82	Y
1.8 VVT-i 16V	ZZT230	E	1794	1ZZ-FE	M			07/00 ▸ 09/05	9091603125	**820512**	82	Y
1.8 i 16V	ZZT231	E	1796	2ZZ-GE	M			08/00 ▸ 09/05	9091603084	**820512**	82	Y

• **New** Nouveau **Nuevo** Novo **Nuovo** Nieuw **Neu** Yeni Новый Nou

			CC			AC			OE	Valeo	(°)C		
TOYOTA (.../...)													
Celica (ZT230) (99>) (.../...)													
1.8 i 16V	*ZZT231*	E	1796	2ZZ-GE	M		☞4,9	08/00 ▸ 09/05	9091603129	**820136**	82	Y	
Corolla (50) (79>83)													
1.3	*KE70RE, KE70LE, KE70LG, KE70RG*	E	1290	4K, 4K-C	M		☞8	08/79 ▸ 12/82	9091603034	**819875**	87	Y	
1.3	*KE70LG, KE70LE, KE70RG, KE70RE*	E	1290	4K, 4K-C	M		☞4,8	08/79 ▸ 12/82	9091603083	**820172**	82	Y	
1.3	*KE70LG, KE70LE, KE70RE*	E	1290	4K, 4K-C	A		☞4,8	08/79 ▸ 12/82	9091603083	**820172**	82	Y	
1.3	*KE70LE, KE70LG, KE70RE*	E	1290	4K, 4K-C	A		☞8	08/79 ▸ 12/82	9091603034	**819875**	87	Y	
1.6	*AE71RE, AE71RG*	E	1587	4A-C	M			05/83 ▸ 06/84	9091603090	**820510**	82	Y	
1.6	*AE71RE*	E	1587	4A-C	A			05/83 ▸ 06/84	9091603090	**820510**	82	Y	
1.6	*TE71LE*	E	1588	2T-G	M		☞8	08/79 ▸ 11/80	9091603034	**819875**	87	Y	
1.6	*TE71LE*	E	1588	2T-G	M		☞4,8	08/79 ▸ 11/80	9091603083	**820172**	82	Y	
Corolla (80) (83>87)													
1.3	*EE80LE, AE80LE, EE80RE, AE80RE*	E	1295	2E-LC, 2A-L, 2E-L, 2A-LC	M			05/83 ▸ 09/87	9091603090	**820510**	82	Y	
1.3	*EE80LE, EE80RE, AE80LE, AE80RE*	E	1295	2E-L, 2A-L, 2A-LC	A			05/83 ▸ 09/87	9091603090	**820510**	82	Y	
1.6,1.6 i 16V	*AE82LE, AE82RE, AE86LE AE82RC, AE86RE*	E	1587	4A-LC, 4A-L, 4A-GEC, 4A-GELC 4A-GEL, 4A-C, 4A, 4A-GE	M			05/83 ▸ 09/87	9091603090	**820510**	82	Y	
1.6	*AE82RE, AE82LE, AE86LE*	E	1587	4A-LC, 4A-L, 4A	A			05/83 ▸ 09/87	9091603090	**820510**	82	Y	
1.8 D	*CE80LE, CE80RE*	D	1839	1C-L	M			05/83 ▸ 09/87	9091603090	**820510**	82	Y	
Corolla (90) (87>92)													
1.3	*EE90RA, EE90LA*	E	1295	2E, 2E-E	M			05/87 ▸ 05/92	9091603090	**820510**	82	Y	
1.3	*EE90LA, EE90RA*	E	1295	2E, 2E-E	A			05/87 ▸ 05/92	9091603090	**820510**	82	Y	
1.6,1.6 16V	*AE92LA, AE95RA, AE95LC AE95LA, AE95RC, AE92RA*	E	1587	4A-F, 4A-FE, 4A-GE	M			05/87 ▸ 05/92	9091603090	**820510**	82	Y	
1.6,1.6 16V	*AE92LA, AE92RA*	E	1587	4A-FE, 4A-F	A			05/87 ▸ 05/92	9091603090	**820510**	82	Y	
1.8 D	*CE90RA, CE90LA*	D	1839	1C	M			05/87 ▸ 05/92	9091603090	**820510**	82	Y	
Corolla (100) (92>97)													
1.3	*EE100L*	E	1295	2E	M			05/92 ▸ 04/97	9091603090	**820510**	82	Y	
1.3 16V	*EE101L, EE101R*	E	1332	4E-FE	M			05/92 ▸ 04/97	9091603090	**820510**	82	Y	
1.3 16V	*EE101L, EE101R*	E	1332	4E-FE	A			05/92 ▸ 04/97	9091603115	**820510**	82	Y	
1.6 16V	*AE101L, AE101R*	E	1587	4A-FE	M			05/92 ▸ 04/97	9091603115	**820510**	82	Y	
1.6 16V	*AE101L, AE101R*	E	1587	4A-FE	A			05/92 ▸ 04/97	9091603115	**820510**	82	Y	
1.8 16V	*AE102R, AE102L, AE103L*	E	1762	7A-FE	M			11/92 ▸ 04/97	9091603115	**820510**	82	Y	
2.0 D	*CE100L, CE100R*	D	1974	2C	M			05/92 ▸ 04/97	9091603090	**820510**	82	Y	
Corolla (110) (97>99)													
1.3 i 16V	*EE111L, EE111R*	E	1332	4E-FE	M			04/97 ▸ 09/99	9091603090	**820510**	82	Y	
1.3 i 16V	*EE111R, EE111L*	E	1332	4E-FE	A			04/97 ▸ 09/99	9091603090	**820510**	82	Y	
1.6 i 16V	*AE111R, AE111L*	E	1587	4A-FE	M			04/97 ▸ 09/99	9091603115	**820510**	82	Y	
1.6 i 16V	*AE111R, AE111L*	E	1587	4A-FE	A			04/97 ▸ 09/99	9091603115	**820510**	82	Y	
1.8 i 16V	*AE115L*	E	1762	7A-FE	M			04/97 ▸ 09/99	9091603115	**820510**	82	Y	
2.0 D	*CE110R, CE110L*	D	1974	2C-E	M			04/97 ▸ 09/99	9091603090	**820510**	82	Y	
Corolla (110) (99>2001)													
1.4 i 16V	*ZZE111*	E	1398	4ZZ-FE	M		☞4,9	10/99 ▸ 07/00	9091603129	**820136**	82	Y	
1.4 i 16V	*ZZE111*	E	1398	4ZZ-FE	M			10/99 ▸ 10/01	9091603125	**820512**	82	Y	
1.6 VVTi 16V	*ZZE112*	E	1598	3ZZ-FE	M		☞4,9	10/99 ▸ 07/00	9091603129	**820136**	82	Y	
1.6 VVTi 16V	*ZZE112*	E	1598	3ZZ-FE	A		☞4,9	10/99 ▸ 07/00	9091603129	**820136**	82	Y	
1.6 VVTi 16V	*ZZE112*	E	1598	3ZZ-FE	A			07/00 ▸ 10/01	9091603125	**820512**	82	Y	
1.6 VVTi 16V	*ZZE112*	E	1598	3ZZ-FE	M			07/00 ▸ 10/01	9091603125	**820512**	82	Y	
1.8 i 16V	*AE115L*	E	1762	7A-FE	M			10/99 ▸ 10/01	9091603115	**820510**	82	Y	
1.9 D	*WZE110*	D	1868	1WZ	M		☞4	12/99 ▸ 10/01	SU00100223	**819950**	83	Y	
2.0 D-4D 16V	*CDE110*	D	1995	1CDFTV-DCR	M		☞4,9	08/00 ▸ 10/01	9091603123	**820173**	82	Y	
Corolla (120) (2001>)													
1.4 i 16V	*ZZE120*	E	1398	4ZZ-FE	M			10/01 ▸ 02/07	9091603125	**820512**	82	Y	
1.6 VVT-i 16V	*ZZE121*	E	1598	3ZZ-FE	A			10/01 ▸ 02/07	9091603125	**820512**	82	Y	
1.6 VVT-i 16V	*ZZE121*	E	1598	3ZZ-FE	M			10/01 ▸ 02/07	9091603125	**820512**	82	Y	
1.8 i 16V	*ZZE123*	E	1796	2ZZ-GE	M			11/01 ▸	9091603084	**820512**	82	Y	
1.8 i 16V	*ZZE123*	E	1796	2ZZ-GE	M		☞4,9	11/01 ▸	9091603129	**820136**	82	Y	
1.4 D4-D	*NDE120*	D	1364	1ND-TV	M		☞4,9	08/04 ▸	9091603093	**820173**	82	Y	

• **New** Nouveau **Nuevo** Novo **Nuovo** Nieuw **Neu** Yeni Новый Nou

												(°)C	
TOYOTA (.../...)													
Corolla (120) (2001>) (.../...)													
2.0 D4-D 16V	*CDE120*	D	1995	1CDFTV-DCRL, 1CDFTV-DCR 1CDFTV-HDCR	M		☞4,9	10/01 ▸	9091603123	**820173**	82	Y
2.0 D4-D 16V	*CDE120*	D	1995	1CDFTV-DCR	M		☞4,9	09/02 ▸ 05/04	9091603129	**820136**	82	Y
2.0 D4-D 16V	*CDE120*	D	1995	1CDFTV-DCR	M			09/02 ▸ 05/04	9091603084	**820512**	82	Y
Corolla (150)													
2.0 D-4D 16V	*ADE150*	D	1998	1ADFTV-DCR,1ADFTV-DCRL/F	M			11/06 ▸ 01/09	9091603125	**820512**	82	Y
Corolla Verso (2001>2003)													
1.6 VVTi 16V	*ZZE121*	E	1598	3ZZ-FE	M			10/01 ▸ 12/03	9091603125	**820512**	82	Y
1.8 VVTi 16V	*ZZE122*	E	1794	1ZZ-FE	A			09/01 ▸ 12/03	9091603125	**820512**	82	Y
1.8 VVTi 16V	*ZZE122*	E	1794	1ZZ-FE	M			09/01 ▸ 12/03	9091603125	**820512**	82	Y
2.0 D4-D 16V	*CDE120*	D	1995	1CDFTV-HDCR, 1CDFTV-DCR	M		☞4,9	10/01 ▸ 12/03	9091603123	**820173**	82	Y
Corolla Verso (2004>)													
2.0 D4-D 16V	*CUR10R, CUR10L*	D	1995	1CDFTV-DCRL	M		☞4,9	02/04 ▸ 08/05	9091603123	**820173**	82	Y
Corona (RT1) (70>81)													
1.6	*RT100*	E	1587	12R	M		☞4,8	08/73 ▸ 08/78	9091603083	**820172**	82	Y
1.6,1.8,2.0	*RT118, RT132, TT132 TT130, RT117*	E	-		M		☞4,8	09/70 ▸ 12/81	9091603083	**820172**	82	Y
Cressida II (80>85)													
2.0	*G2-RX6*	E	1972	21R-C, 21R	M		☞8	09/80 ▸ 07/84	9091603034	**819875**	87	Y
2.0	*G2-RX6*	E	1972	21R, 21R-C	M		☞4,8	09/80 ▸ 07/84	9091603083	**820172**	82	Y
2.0	*G2-RX6*	E	1972	21R-C, 21R	A		☞4,8	09/80 ▸ 07/84	9091603083	**820172**	82	Y
2.0	*G2-RX6*	E	1972	21R, 21R-C	A		☞8	09/80 ▸ 07/84	9091603034	**819875**	87	Y
2.2 D	*G2-LX6*	D	2188	L	M			09/80 ▸ 07/84	9091603061	●**820773**	82	Y
2.2 D	*G2-LX6*	D	2188	L	A			09/80 ▸ 07/84	9091603061	●**820773**	82	Y
Land Cruiser (BJ40)													
3.0 D	*BJ43RK, BJ40LV, BJ40RV, BJ43LK BJ40LK, BJ40RK*	D	2977	B	M		☞4,8	08/80 ▸ 10/84	9091603077	**820442**	82	Y
3.4 D	*BJ42RV, BJ42LV, BJ45LP, BJ45LV BJ46LM, BJ46LK, BJ42LK, BJ46RK BJ42LM, BJ45RP, BJ45RV, BJ42RK*	D	3431	3B	M		☞4,8	08/80 ▸ 10/84	9091603077	**820442**	82	Y
3.4 D	*BJ46LK, BJ46LM, BJ45LV, BJ42LK BJ45LP, BJ42LM, BJ42LV*	D	3431	3B	M		☞4,8	08/80 ▸ 10/84	9091603103	**820443**	88	Y
4.0 D	*HJ47RP, HJ47RV, HJ47LV, HJ47LP*	D	3980	2H	M		☞4,8	08/80 ▸ 10/84	9091603026	**820442**	82	Y
Land Cruiser (BJ60)													
3.4 D	*BJ60RV, BJ60LV*	D	3431	3B	M		☞4,8	08/80 ▸ 07/87	9091603077	**820442**	82	Y
4.0 D,4.0 TD	*HJ60LG, HJ61RG, HJ60RV HJ60RG, HJ60LV*	D	3980	2H, 12H-T	M		☞4,8	08/80 ▸ 01/90	9091603050	**820442**	82	Y
4.0 D,4.0 TD	*HJ60LG, HJ60LV, HJ61LV HJ61LG, HJ60RG*	D	3980	2H, 12H-T	M		☞4,8	11/84 ▸ 01/90	9091603103	**820443**	88	Y
4.0 D	*HJ60LG, HJ60LV, HJ60RG*	D	3980	2H	A		☞4,8	11/84 ▸ 01/90	9091603103	**820443**	88	Y
4.0 D,4.0 TD	*HJ60RV, HJ61RG, HJ60RG*	D	3980	2H, 12H-T	A		☞4,8	11/84 ▸ 07/87	9091603026	**820442**	82	Y
Land Cruiser (BJ70)													
2.5 TD	*BJ73LV*	D	2494	3B-VM66A	M		☞4,8	10/85 ▸ 02/94	9091603103	**820443**	88	Y
3.0 TD	*KZJ70L, KZJ73L, KZJ70R KZJ77L*	D	2982	1KZ-T	M			05/93 ▸ 04/96	9091603118	**820511**	82	Y
3.4 D	*BJ70LV, BJ71LV, BJ70RV, BJ73LV BJ75LP, BJ75LV*	D	3431	3B, 13B-T	M		☞4,8	11/84 ▸ 01/90	9091603103	**820443**	88	Y
3.4 TD	*PZJ75L, PZJ70L, PZJ73L*	D	3470	1PZ	M		☞4,9	01/90 ▸ 08/92	9091603089	**820514**	76	Y
4.2 D	*HZJ71L, HZJ75L, HZJ79L, HZJ78L HZJ74L, HZJ70L, HZJ73L*	D	4164	1HZ	M		☞4,9	01/90 ▸ 08/01	9091603089	**820514**	76	Y
Land Cruiser (BJ80)													
4.5 i	*FZJ80L*	E	4477	1FZ-FE	M		☞4,9	01/95 ▸ 01/98	9091603117	**820514**	76	Y
4.5 i	*FZJ80L, FZJ80R*	E	4477	1FZ-FE	A		☞4,9	08/92 ▸ 01/98	9091603117	**820514**	76	Y
4.2 D,4.2 TD	*HDJ80R, HDJ80L, HZJ80L*	D	4164	1HD-T, 1HD-FT, 1HZ	M		☞4,9	01/90 ▸ 01/98	9091603089	**820514**	76	Y

• **New** Nouveau **Nuevo** Novo **Nuovo** Nieuw **Neu** Yeni Новый Nou

			CC			AC			OE	Valeo	(°)C	
TOYOTA (.../...)												
Land Cruiser (BJ80) (.../...)												
4.2 D,4.2 TD	*HZJ80L, HDJ80L, HDJ80R*	D	4164	1HZ, 1HD-T	A		☞4,9	01/90 ▸ 01/95	9091603089	**820514**	76	Y
Land Cruiser (HD/UZ 10)												
4.7 i	*UZJ100*	E	4664	2UZ-FE	A		☞4,9	01/98 ▸	9091603100	**820513**	82	Y
4.2 TD	*HDJ100*	D	4164	1HD-FTE	M		☞4,9	08/00 ▸ 08/02	9091603089	**820514**	76	Y
4.2 TD	*HDJ100*	D	4164	1HD-FTE	A		☞4,9	01/98 ▸	9091603089	**820514**	76	Y
Land Cruiser (KZ/VZ9)												
3.4 i V6	*VZJ95L, VZJ90L, VZJ95R*	E	3378	5VZ-FE	A			04/96 ▸ 09/02	9091603075	**820512**	82	Y
3.4 i V6	*VZJ95L, VZJ90L*	E	3378	5VZ-FE	M			04/96 ▸ 09/02	9091603075	**820512**	82	Y
3.0 TD	*KZJ90L, KZJ95R, KZJ95L KDJ90L, KDJ95L, KDJ95R*	D	2982	1KD-FTV,1KZ-TE	A			04/96 ▸ 09/02	9091603118	**820511**	82	Y
3.0 TD	*KZJ90L, KDJ90L, KDJ95L KZJ90R, KDJ90R, KZJ95L KZJ95R, KDJ95R*	D	2982	1KD-FTV,1KZ-TE	M			04/96 ▸ 09/02	9091603118	**820511**	82	Y
Land Cruiser 120 (KD/GR)												
3.0 D-4D 16V	*KDJ120, KDJ125*	D	2982	1KD-FTV	A			09/02 ▸ 08/06	9091603118	**820511**	82	Y
3.0 D-4D 16V	*KDJ120, KDJ125*	D	2982	1KD-FTV	M			09/02 ▸ 08/06	9091603118	**820511**	82	Y
4.0 i VVT-i 24V	*GRJ120, GRJ125*	E	3956	1GR-FE	A			01/03 ▸ 08/09	9091603118	**820511**	82	Y
Model F												
1.8	*YR20LG, YR20RG*	E	1812	2Y, 2Y-C	M			11/82 ▸ 08/84	9091603090	**820510**	82	Y
1.8	*YR20RG, YR20LG*	E	1812	2Y-C, 2Y	A			11/82 ▸ 08/84	9091603090	**820510**	82	Y
2.0	*YR21RG, YR21LG*	E	1998	3Y, 3Y-C	M			01/84 ▸ 01/90	9091603090	**820510**	82	Y
2.0	*YR21RG, YR21LG*	E	1998	3Y-C, 3Y	A			01/84 ▸ 01/90	9091603090	**820510**	82	Y
2.2 i	*YR31RG, YR22RG, YR22LG, YR31LG*	E	2236	4Y-EC	M			08/85 ▸ 01/90	9091603090	**820510**	82	Y
2.2 i	*YR22LG, YR31RG, YR22RG*	E	2236	4Y-EC	A			08/85 ▸ 01/90	9091603090	**820510**	82	Y
2.0 D	*CR21LG, CR21RG*	D	1974	2C	M			05/83 ▸ 08/88	9091603090	**820510**	82	Y
MR 2 (AW20)												
2.0 i 16V	*SW20RA*	E	1996	3S-FE	A			12/89 ▸ 12/91	9091603075	**820512**	82	Y
2.0 i 16V	*SW20KA*	E	1996	3S-FE	M			12/89 ▸ 08/92	9091603075	**820512**	82	Y
2.0 i 16V	*SW20RA, SW20LA*	E	1998	3S-GE,3S-GEC,3S-GEW	M			10/89 ▸ 11/93	9091603075	**820512**	82	Y
2.0 i 16V	*SW20LA, SW20RA*	E	1998	3S-GEC, 3S-GE	M		☞4,9	11/93 ▸ 11/99	9091603100	**820513**	82	Y
2.2 i 16V	*SW21LA*	E	2164	5S-FE	M			12/89 ▸ 06/95	9091603075	**820512**	82	Y
MR 2 (AW30)												
1.8 VVT-i 16V	*ZZW30R, ZZW30L*	E	1794	1ZZ-FE	M		☞4,9	12/99 ▸ 07/00	9091603129	**820136**	82	Y
1.8 VVT-i 16V	*ZZW30L, ZZW30R*	E	1794	1ZZ-FE	M			07/00 ▸ 09/05	9091603125	**820512**	82	Y
1.8 VVT-i 16V	*ZZW30L, ZZW30R*	E	1794	1ZZ-FE	M			12/99 ▸ 07/00	9091603084	**820512**	82	Y
Paseo (95>99)												
1.5 i 16V	*EL54RD, EL54LD*	E	1496	5E-FE	M			08/95 ▸ 07/99	9091603090	**820510**	82	Y
1.5 i 16V	*EL54LD, EL54RD*	E	1496	5E-FE	M		☞4,9	12/95 ▸ 07/99	9091603112	**820515**	76	Y
1.5 i 16V	*EL54RD, EL54LD*	E	1496	5E-FE	A			08/95 ▸ 07/99	9091603090	**820510**	82	Y
Picnic (96>2001)												
2.0 i 16V	*SXM10R, SXM10L*	E	1998	3S-FEC	M			09/96 ▸ 05/01	9091603090	**820510**	82	Y
2.0 i 16V	*SXM10R, SXM10L*	E	1998	3S-FEC	A			09/96 ▸ 05/01	9091603090	**820510**	82	Y
2.2 TD	*CXM10R, CXM10L*	D	2184	3C-TE	M			09/97 ▸ 05/01	9091603090	**820510**	82	Y
Picnic (2001>)												
2.0 VVTi 16V	*ACM20R, ACM20L*	E	1998	1AZ-FE	M		☞4,9	05/01 ▸	9091603129	**820136**	82	Y
2.0 VVTi 16V	*ACM20R, ACM20L*	E	1998	1AZ-FE	A		☞4,9	05/01 ▸	9091603129	**820136**	82	Y
2.0 VVTi 16V	*ACM20R, ACM20L*	E	1998	1AZ-FE	A			05/01 ▸	9091603084	**820512**	82	Y
2.0 VVTi 16V	*ACM20R, ACM20L*	E	1998	1AZ-FE	M			05/01 ▸	9091603084	**820512**	82	Y
2.0 D-4D 16V	*CLM20R, CLM20L*	D	1995	1CDFTV-HDCR	M		☞4,9	05/01 ▸	9091603123	**820173**	82	Y
Previa (TCR) (90>2000)												
2.4	*TCR10R, TCR11R, TCR20R, TCR10L TCR11L, TCR21R, TCR20L, TCR21L*	E	2438	2TZ-FE	M		☞4,9	05/90 ▸	9091603120	**820516**	82	Y

• **New** Nouveau **Nuevo** Novo **Nuovo** Nieuw **Neu** Yeni Новый Nou

			Type Ctr.		CC			AC			OE	Valeo	(°)C
TOYOTA (.../...)													
Previa (TCR) (90>2000) (.../...)													
2.4	*TCR10R, TCR11R, TCR10L, TCR11L TCR21R, TCR20R*	E	2438	2TZ-FE	A		☞4,9	05/90 ▸	9091603120	**820516**	82	Y
Previa (R30) (2000>)													
2.4 VVTi 16V	*ACR30L, ACR30R*	E	2362	2AZ-FE	M		☞4,9	02/00 ▸	9091603129	**820136**	82	Y
2.4 VVTi 16V	*ACR30L, ACR30R*	E	2362	2AZ-FE	A		☞4,9	02/00 ▸	9091603129	**820136**	82	Y
2.4 VVTi 16V	*ACR30R, ACR30L*	E	2362	2AZ-FE	A			02/00 ▸	9091603084	**820512**	82	Y
2.4 VVTi 16V	*ACR30L, ACR30R*	E	2362	2AZ-FE	M			02/00 ▸	9091603084	**820512**	82	Y
Prius (2000>2003)													
1.5 i 16V	*NHW11L, NHW11R*	E	1497	1NZ-FXE	A		☞4,9	05/00 ▸ 07/03	9091603093	**820173**	82	Y
Prius (2003>)													
1.5 i 16V	*NHW20L, NHW20R*	E	1497	1NZ-FXE	A		☞4,9	08/03 ▸	9091603093	**820173**	82	Y
RAV4 (94>2000)													
2.0 i 16V	*SXA11R, SXA10L, SXA10R SXA11L*	E	1998	3S-FE, 3S-FEC	M			04/94 ▸	9091603090	**820510**	82	Y
2.0 i 16V	*SXA11R, SXA10L, SXA11L SXA10R*	E	1998	3S-FEC, 3S-FE	A			04/94 ▸	9091603090	**820510**	82	Y
RAV4 (2000>2005)													
1.8 i 16V	*ZCA25R, ZCA25L, ZCA26L ZCA26R*	E	1794	1ZZ-FE	M			05/00 ▸ 11/05	9091603125	**820512**	82	Y
2.0 VVT-i 16V,2.0 i 16V	*ACA21L, ACA20L, ACA21R ACA20R*	E	1998	1AZ-FE	A			05/00 ▸	9091603084	**820512**	82	Y
2.0 VVT-i 16V,2.0 i 16V	*ACA21L, ACA21R, ACA20L ACA20R*	E	1998	1AZ-FE	M			05/00 ▸	9091603084	**820512**	82	Y
2.0 VVT-i 16V,2.0 i 16V	*ACA21L, ACA20R, ACA21R ACA20L*	E	1998	1AZ-FE	M		☞4,9	05/00 ▸ 11/05	9091603129	**820136**	82	Y
2.0 VVT-i 16V,2.0 i 16V	*ACA21R, ACA21L, ACA20L ACA20R*	E	1998	1AZ-FE	A		☞4,9	05/00 ▸ 11/05	9091603129	**820136**	82	Y
2.0 D-4D 16V	*CLA20L, CLA20R, CLA21R CLA21L*	D	1995	1CDFTV-DCRL	M		☞4,9	05/01 ▸ 11/05	9091603123	**820173**	82	Y
RAV4 (2005>)													
2.4 VVTi 16V	*ACA31L, ACA33L*	E	2362	2AZ-FE	A			12/08 ▸	9091603125	**820512**	82	Y
2.2 D-4D 150 16V	*ALA30R, ALA30L*	D	2231	2ADFHV-DCRL	A			03/09 ▸ 02/10	9091603125	**820512**	82	Y
2.2 D-4D 150 16V 2.2 D-4D 16V	*ALA35L, ALA30R, ALA30L ALA35R*	D	2231	2AD-FTV,2ADFHV-DCRL 2ADFTV-DCRE	M			11/05 ▸	9091603125	**820512**	82	Y
Starlet (KP6) (78>84)													
1.0	*KP60LP, KP60LV, KP60RP, KP60RV*	E	993	2K	M		☞4,8	02/78 ▸ 10/84	9091603083	**820172**	82	Y
1.2	*KP62LP, KP62RP, KP62RV, KP62LV*	E	1166	3K-H, 3K-C	M		☞4,8	07/78 ▸ 09/84	9091603083	**820172**	82	Y
1.3	*KP61LV, KP61LP*	E	1290	4K	M		☞4,8	08/82 ▸ 09/84	9091603083	**820172**	82	Y
1.3	*KP61LP*	E	1290	4K	A		☞4,8	08/82 ▸ 09/84	9091603083	**820172**	82	Y
Starlet (EP7) (84>89)													
1.0	*EP70LP*	E	999	1E-L	M			10/84 ▸ 12/89	9091603090	**820510**	82	Y
1.3	*EP71LP*	E	1295	2E-L	M			10/84 ▸ 12/89	9091603090	**820510**	82	Y
1.5 D	*NP70LP*	D	1453	1N	M			12/86 ▸ 12/89	9091603090	**820510**	82	Y
Starlet (EP/NP8) (89>95)													
1.0	*EP80RA, EP80LA*	E	999	1E	M			12/89 ▸ 12/92	9091603090	**820510**	82	Y
1.3,1.3 i	*EP81LA, EP81RA*	E	1295	2E-E, 2E	M			12/89 ▸ 12/95	9091603090	**820510**	82	Y
1.3,1.3 i	*EP81LA*	E	1295	2E-E, 2E	A			12/89 ▸ 12/95	9091603090	**820510**	82	Y
1.5 D	*NP80LA*	D	1453	1N	M			12/89 ▸ 12/95	9091603090	**820510**	82	Y
Starlet (EP91) (96>)													
1.3 i 16V	*EP91LA, EP91RA*	E	1332	4E-FE	M			01/96 ▸ 07/99	9091603090	**820510**	82	Y
1.3 i 16V	*EP91RA, EP91LA*	E	1332	4E-FE	A			01/96 ▸ 07/99	9091603090	**820510**	82	Y
Supra (JZA80) (93>)													
3.0 i,3.0 i Turbo	*JZA80R, JZA80L*	E	2997	2JZ-GTE, 2JZ-GE	M		☞4,9	05/93 ▸ 05/96	9091603093	**820173**	82	Y

• **New** Nouveau **Nuevo** Novo **Nuovo** Nieuw **Neu** Yeni Новый Nou

Type Ctr.		cc		AC		2 3	OE	Valeo	(°)C	
TOYOTA (.../...)										
Supra (JZA80) (93>) (.../...)										
3.0 i,3.0 i Turbo *JZA80R, JZA80L*	E	2997	2JZ-GTE, 2JZ-GE	A		☞4,9	05/93 ▸ 05/96	9091603093	**820173**	82	Y
Tercel (AL1)										
1.3 *AL11*	E	-		M			1978 ▸ 05/82	9091603090	**820510**	82	Y
Tercel (AL2)										
1.3 *AL20LZ, AL20RZ*	E	1295	2A	M			05/82 ▸ 08/84	9091603090	**820510**	82	Y
1.3 *AL20RZ, AL20LZ*	E	1295	2A	A			05/82 ▸ 08/84	9091603090	**820510**	82	Y
1.5 *AL25RG, AL25LG, AL21LZ*	E	1452	3A-C, 3A	M			08/82 ▸ 01/88	9091603090	**820510**	82	Y
1.5 *AL21LZ*	E	1452	3A-C	A			09/82 ▸ 08/84	9091603090	**820510**	82	Y
Yaris										
1.4 D-4D *NLP10R, NLP10L*	D	1364	1ND-TV	M		☞4,9	02/03 ▸ 11/05	9091603093	**820173**	82	Y
Yaris (NCP/SCP) JPP										
1.0 i 16V *SCP10L, SCP10R*	E	998	1SZ-FE	M			01/99 ▸ 12/02	9091603122	**820597**	80	Y
1.3 i 16V *NCP10L, NCP10R*	E	1299	2NZ-FE	M		☞4,9	06/99 ▸	9091603093	**820173**	82	Y
1.3 i 16V *NCP10R, NCP10L*	E	1299	2NZ-FE	A		☞4,9	06/99 ▸ 12/02	9091603093	**820173**	82	Y
1.5 VVTi 16V *NCP13R*	E	1497	1NZ-FE	M		☞4,9	01/01 ▸ 08/05	9091603093	**820173**	82	Y
1.4 D-4D *NLP10R, NLP10L*	D	1364	1ND-TV	M		☞4,9	10/01 ▸ 08/05	9091603093	**820173**	82	Y
Yaris (KSP) JPP (2005>)										
1.8 VVTi 16V *ZSP90R, ZSP90L*	E	1798	2ZRFE	M		☞4,9	11/06 ▸	9091603129	**820136**	82	Y
Yaris (KS/NL/SCP90) (2005>)										
1.4 D4-D *NLP90L, NLP90R*	D	1364	1ND-TV	M		☞4,9	01/06 ▸	9091603093	**820173**	82	Y
Yaris (SCP1/NLP10) (FRA)										
1.0 i 16V *SCP10L, SCP10R*	E	998	1SZ-FE	M			01/01 ▸ 11/05	9091603122	**820597**	80	Y
1.3 VVTi 16V *SCP12R, SCP12L*	E	1298	2SZ-FE	A			05/02 ▸ 11/05	9091603122	**820597**	80	Y
1.3 VVTi 16V *SCP12R, SCP12L*	E	1298	2SZ-FE	M			05/02 ▸ 11/05	9091603122	**820597**	80	Y
Yaris 2 (KSP90/NLP90/SCP90)										
1.3 VVTi 16V *SCP90L, SCP90R*	E	1298	2SZ-FE	M			11/05 ▸ 11/08	9091603122	**820597**	80	Y
Yaris Verso										
1.4 D-4D *NLP22R, NLP20L, NLP22L NLP20R*	D	1364	1ND-TV	M		☞4,9	10/01 ▸	9091603093	**820173**	82	Y
TOYOTA										
Dyna										
2.4,3.4 *BU75, BU85*	D	-		M		☞4,8	09/84 ▸ 08/87	9091603077	**820442**	82	Y
Dyna 100										
2.4 D *LH80LM*	D	2446	2L	M		☞4,8	08/87 ▸ 04/95	1634054010	**820174**	88	Y
Dyna 150										
2.8 *LY211*	D	-		M		☞4,8	05/95 ▸ 08/98	1634054010	**820174**	88	Y
Dyna 200										
3.4,3.7 *BU84, BU89*	D	-		M		☞4,8	08/88 ▸ 05/95	9091603102	**820442**	82	Y
3.4,3.7 *BU79, BU76*	D	-		M		☞4,8	08/88 ▸ 05/95	9091603103	**820443**	88	Y
Hi-Ace (RH/LH11)										
1.6 *RH11RJ, RH20LV, RH11LJ, RH30LV RH11LP, RH30RV, RH20LB, RH20RV RH11RP, RH20RB, RH30RB, RH30LB RH20LG*	E	1587	12R, 12R-M	M		☞8	02/77 ▸ 03/83	9091603034	**819875**	87	Y
1.6 *RH20RV, RH11RJ, RH11LP, RH30LV RH30RV, RH11RP, RH11LJ, RH20LG RH20LV, RH30RB, RH20LB, RH30LB RH20RB*	E	1587	12R, 12R-M	M		☞4,8	02/77 ▸ 03/83	9091603083	**820172**	82	Y

• **New** Nouveau **Nuevo** Novo **Nuovo** Nieuw **Neu** Yeni Новый Nou

Valeo

		Type Ctr.		cc			AC		2-3	OE	Valeo	(°)C	
TOYOTA (.../...)													
Hi-Ace (RH/LH11) (.../...)													
2.2 D	*LH20LV, LH20LB, LH30LV, LH30LB LH11LJ*	D	2188	L	M			09/79 ▸ 03/83	9091603061	●**820773**	82	Y
Hi-Ace (YH/LH 50-60)													
1.8	*YH50RV, YH50LV*	E	1812	2Y, 2Y-C	M			12/82 ▸ 08/86	9091603090	**820510**	82	Y
1.8	*YH50RV*	E	1812	2Y-C	A			12/82 ▸ 01/84	9091603090	**820510**	82	Y
2.0	*YH51LV, YH61LV, YH51RV, YH61LB YH61RV*	E	1998	3Y	M			06/83 ▸ 08/89	9091603090	**820510**	82	Y
2.0	*YH61LV, YH51LV, YH51RV*	E	1998	3Y	A			01/84 ▸ 08/89	9091603090	**820510**	82	Y
2.2 i	*YH56LV, YH66LV, YH53RV*	E	2236	4Y	M			08/86 ▸ 08/89	9091603090	**820510**	82	Y
2.2 i	*YH53RV*	E	2236	4Y	A			08/86 ▸ 07/88	9091603090	**820510**	82	Y
Hi-Ace (LH/RZH 100)													
2.0	*RZH112, RZH102*	E	1998	1RZ	M		☞4,9	08/89 ▸	9091603101	**820173**	82	Y
2.0	*RZH112*	E	1998	1RZ	A		☞4,9	08/89 ▸ 08/91	9091603101	**820173**	82	Y
2.4 i	*RZH115, RZH103, RZH113, RZH119 RZH109*	E	2438	2RZ-E	M		☞4,9	08/89 ▸	9091603101	**820173**	82	Y
2.4 i	*RZH113*	E	2438	2RZ-E	A		☞4,9	08/89 ▸	9091603101	**820173**	82	Y
2.4 D	*LH112L, LH102L, LH102R, LH118L LH108L, LH112R*	D	2446	2L	M		☞4,8	08/89 ▸	9091603099	**820174**	88	Y
2.4 D	*LH112L*	D	2446	2L	A		☞4,8	08/89 ▸	9091603099	**820174**	88	Y
Hiace (RCH/LXH 10-20)													
2.4 i	*RCH28L, RCH12L, RCH22R, RCH22L RCH18L, RCH12R*	E	2438	2RZ-E	M		☞4,9	08/95 ▸ 11/03	9091603120	**820516**	82	Y
2.4 i	*RCH12L*	E	2438	2RZ-E	A		☞4,9	08/95 ▸ 04/98	9091603120	**820516**	82	Y
2.7 i	*RCH23L, RCH19L, RCH13L, RCH29L RCH13R*	E	2694	3RZ-FE	M		☞4,9	04/98 ▸	9091603120	**820516**	82	Y
2.7 i	*RCH13L*	E	2694	3RZ-FE	A		☞4,9	04/98 ▸ 08/01	9091603120	**820516**	82	Y
2.4 D,2.4 TD	*LXH12L, LXH22L, LXH12R LXH22R, LXH18L, LHX12R LXH28L*	D	2446	2L-T, 2L	M		☞4,8	08/95 ▸ 08/01	1634054010	**820174**	88	Y
2.5 D-4D	*KLH22L, KLH12L*	D	2494	2KD-FTV	A			08/01 ▸ 08/06	9091603118	**820511**	82	Y
2.5 D-4D	*KLH12L, KLH22R, KLH28L KLH12R, KLH22L, KLH18L*	D	2494	2KD-FTV	M			08/01 ▸ 08/06	9091603118	**820511**	82	Y
Hi-Lux													
1.6	*RN25LK, RN20LK, RN20KR, RN25KR RN25JR, RN20JR*	E	1587	12R, 12R-M	M		☞4,8	05/72 ▸ 07/78	9091603083	**820172**	82	Y
2.0	*RN22JD, RN22KD, RN22LM*	E	1968	18R	M		☞4,8	04/74 ▸ 09/77	9091603083	**820172**	82	Y
2.0	*RN22HD*	E	1968	18R	A		☞4,8	04/74 ▸ 09/77	9091603083	**820172**	82	Y
Hi-Lux (RN/LN 3-4)													
1.6	*RN40LK, RN40RJ, RN30RJ, RN40RK RN30LK, RN30RK*	E	1587	12R, 12R-M	M		☞4,8	08/78 ▸ 03/84	9091603083	**820172**	82	Y
2.0	*RN36RK, RN46RK, RN41RM, RN41RJ*	E	1968	18R, 18R-C	M		☞4,8	08/78 ▸ 07/83	9091603083	**820172**	82	Y
Hi-Lux (RN/YN/LN 5-6)													
1.6	*YN55LK, YN50LK, YN50RK, YN50RJ YN55RK, YN55RJ*	E	1626	1Y, 1Y-C	M			08/83 ▸	9091603090	**820510**	82	Y
1.8	*YN56RM, YN51RM, YN56RJ, YN51RJ YN56LM*	E	1812	2Y, 2Y-C	M			08/83 ▸	9091603090	**820510**	82	Y
2.0	*YN57RK, YN57RM, YN57LK, YN65LK YN65RM, YN52LK, YN57LM, YN60LK YN65LM, YN65RK, YN60LM, YN52LM*	E	1998	3Y, 3Y-C	M			08/83 ▸	9091603090	**820510**	82	Y
2.0	*YN57RP*	E	1998	3Y-C, 3Y	A			08/83 ▸ 08/88	9091603090	**820510**	82	Y
2.2 i	*YN67RM, YN67LM, YN58RK, YN58RM YN62LM*	E	2236	4Y-C, 4Y	M			08/85 ▸	9091603090	**820510**	82	Y
2.2 i	*YN58RP*	E	2236	4Y-C	A			08/87 ▸ 08/88	9091603090	**820510**	82	Y
Hi-Lux (8-9-10)													
1.8	*YN85LT, YN85RT, YN90LC*	E	1812	2Y	M			08/88 ▸	9091603090	**820510**	82	Y

• **New** Nouveau **Nuevo** Novo **Nuovo** Nieuw **Neu** Yeni Новый Nou

Type Ctr.		cc		AC		2 3	OE	Valeo	(°)C	
TOYOTA (.../...)										
Hi-Lux (8-9-10) (.../...)										
2.2 i *YN110L, YN106R*	E	2236	4Y	M		08/88 ▸	9091603090	**820510**	82	Y
Hi-Lux (LN KD RZ)										
2.4 i *RZN173, RZN168*	E	2438	2RZ-FE	M		☞4,9	08/97 ▸ 08/01	9091603120	**820516**	82	Y
2.4 D,2.4 TD *LN145L, LN165R, LN170L LN165L, LN150L, LN145R*	D	2446	2L, 2L-T	M		☞4,8	08/97 ▸ 08/01	1634054010	**820174**	88	Y
2.4 TD *LN190L*	D	2446	2L-T	A		☞4,8	08/99 ▸ 08/01	1634054010	**820174**	88	Y
Hilux										
2.5 D-4D *KDN190*	D	2494	2KD-FTV	A			08/01 ▸	9091603118	**820511**	82	Y
2.5 D-4D,2.5 D-4D 4WD *KDN165, KDN170, KDN150 KDN145*	D	2494	2KD-FTV	M			08/01 ▸	9091603118	**820511**	82	Y
3.0 D-4D 171 *KUN26L, KUN26R*	D	2982	1KDFTV	A			07/11 ▸	9091603118	**820511**	82	Y
3.0 D-4D 171 *KUN26L, KUN26R*	D	2982	1KDFTV	M			07/11 ▸	9091603118	**820511**	82	Y
Lite-Ace										
1.3 *KM20RV, KM20LV, KM20RJ, KM20RG*	E	1290	4K, 4K-C	M		☞8	10/79 ▸ 07/88	9091603034	**819875**	87	Y
1.3 *KM20LV, KM20RV, KM20RJ, KM20RG*	E	1290	4K, 4K-C	M		☞4,8	10/79 ▸ 07/88	9091603083	**820172**	82	Y
1.5 *KR27LV, KR21LG, KR27RV*	E	1486	5K	M		☞4,8	01/92 ▸	9091603083	**820172**	82	Y
1.5 *KR21LG, KR27LV, KR27RV*	E	1486	5K	M			01/92 ▸	9091603078	**820439**	88	Y
2.2 *YR29LV, YR22LG*	E	2236	4Y-EC	M			01/92 ▸	9091603090	**820510**	82	Y
1.8 D *CM35RV, CM35LV*	D	1839	1C	M			10/85 ▸ 08/88	9091603090	**820510**	82	Y
2.0 D *CR27RV, CM36LV, CR27LV, CE27LV CM30LG, CR21LG, CM36RV*	D	1974	2C	M			08/88 ▸	9091603090	**820510**	82	Y
VAUXHALL										
Agila										
1.0 i 12V	E	973	Z10XE	M			06/00 ▸	9158251	**820972**	92	Y
1.2 i 16V	E	1199	Z12XE	M			07/00 ▸	9158251	**820972**	92	Y
Astra II (84>91)										
1.2	E	1196	12ST	M			10/84 ▸ 09/91	90200836	**819935**	92	Y
1.3	E	1297	13S	M			10/84 ▸ 10/89	90200836	**819935**	92	Y
1.4 i *TC15J, TC35J, TC08J/J/X, TD08J TD35J, TD48J, TC48/J/X*	E	1389	14NV, C14NZ	M			01/89 ▸ 09/91	90200836	**819935**	92	Y
1.6 i *TC48B, TD08R, TD35B, TD48B, TC08/B*	E	1598	C16NZ, 16SV	M			08/86 ▸ 09/91	90200836	**819935**	92	Y
1.6 i *TC48B, TD35B, TD48B, TC08/B*	E	1598	C16NZ	A			08/86 ▸ 09/91	90200836	**819935**	92	Y
Astra III (91>98)										
1.4,1.4 i	E	1389	C14NV, C14NZ, C14SE, 14NV X14NZ	M	+/-		09/91 ▸ 03/98	90200836	**819935**	92	Y
1.4 i 16V	E	1389	X14XE	M			09/94 ▸ 03/01	90412901	**820139**	92	Y
1.6 i V8000000 ▸	E	1598	16LZ2	M	-		1997 ▸ 03/98	90352677	**820185**	92	Y
1.6 i	E	1598	X16SZ, X16SZR, C16SE, C16NZ	M			09/91 ▸ 03/98	90200836	**819935**	92	Y
1.6 i 16V	E	1598	X16XEL	M			08/94 ▸ 09/98	90412901	**820139**	92	Y
1.6 i	E	1598	16LZ2	M	+/-		10/91 ▸ 03/98	90322033	**820501**	92	Y
1.8 i	E	1796	C18NZ	M	+/-		10/91 ▸ 07/94	90352677	**820185**	92	Y
1.8 i 16V	E	1799	C18XE, C18XEL	M	+/-	☞4	08/94 ▸ 03/98	90501081	**820071**	92	Y
1.8 i 16V ▸ 14058051	E	1799	C18XE,C18XEL	M	+/-		06/93 ▸ 03/98	90411948	**820140**	92	Y
1.8 i 16V ▸ 14058051	E	1799	X18XE	M			01/96 ▸ 03/01	90411948	**820140**	92	Y
2.0 i	E	1998	C20NE	M	+/-		01/91 ▸ 03/98	90486128	**820500**	82	N
2.0 i 16V	E	1998	X20XEV	M	+/-	☞4	04/95 ▸ 03/98	90501081	**820071**	92	Y
2.0 i 16V	E	1998	C20XE	M	+	☞4	10/91 ▸ 03/98	90443472	**819968**	92	Y
2.0 i 16V	E	1998	C20XE	M	-	☞4	10/91 ▸ 03/98	90486126	**820050**	82	Y
2.0 i	E	1998	C20NE	M			01/91 ▸ 03/98	90352677	**820185**	92	Y
2.0 i	E	1998	C20NE	M	-		1996 ▸ 03/98	90322033	**820501**	92	Y
1.7 TD Turbo 731419 ▸	D	1686	17TD	M	+/-	☞4,8	▸ 03/98	97087130	**820152**	85	Y

• **New** Nouveau **Nuevo** Novo **Nuovo** Nieuw **Neu** Yeni Новый Nou

		CC			AC			OE	Valeo	(°)C	
VAUXHALL (.../...)											
Astra III (91>98) (.../...)											
1.7 TD Turbo	D	1686	17TD	M	+/-		09/91 ▸	94372762	**820072**	88	Y
Astra IV (98>)											
1.2 i 16V	E	1199	Z12XE, X12XE	M			04/98 ▸	12992692	**820151**	92	N
1.4 i 16V	E	1389	X14XE	M		☞8	04/98 ▸	90573326	**820504**	92	Y
1.6 i GNV 16V	G	1598	Z16YNG	M			03/03 ▸ 12/05	9129907	**820593**	92	N
1.6 i 16V	E	1598	X16XEL	M		☞8	04/98 ▸	90573326	**820504**	92	Y
1.6 i	E	1598	X16SZR, Z16SE/E2	M			04/98 ▸	90200836	**819935**	92	Y
1.8 i 16V 32000001 ▸	E	1796	Z18XE	M			▸ 08/00	24456401	**820502**	92	Y
1.8 i 16V	E	1799	X18XE1, X18XE	M			04/98 ▸	90536262	**820502**	92	Y
2.0 SRi Turbo 16V,2.0 i 16V	E	1998	X20XEV, Z20LET	M		☞4	04/98 ▸	90501081	**820071**	92	Y
1.7 D Turbo	D	1699	X17DTL	M			04/98 ▸	90009956	**819848**	92	Y
2.0 Di 16V 17B49755 ▸	D	1995	X20DTL, Y20DTL	M			▸ 12/02	24414452	**820591**	92	Y
2.0 Di 16V	D	1995	X20DTL, Y20DTL	M			01/03 ▸	24447862	**820590**	92	Y
2.0 Di 16V ▸ 17B49754	D	1995	X20DTL, Y20DTL	M			04/98 ▸	90572899	**820503**	92	Y
Astra (2004>)											
1.4 Twinport 16V	E	1364	Z14XEP	M			03/04 ▸	12992692	**820151**	92	N
1.8 i 16V	E	1796	Z18XE	M			03/04 ▸	24456401	**820502**	92	Y
2.0 T 16V,2.0 i Turbo 16V	E	1998	Z20LEL, Z20LER, Z20LEH	M		☞4	03/04 ▸	90501081	**820071**	92	Y
1.9 CDTI,1.9 CDTi 16V	D	1910	Z19DTH, Z19DTL	M			03/05 ▸	55202510	**820965**	88	Y
Calibra											
2.0 i 16V,2.0 i Turbo *JM07//1*	E	1998	C20XE, C20LET	M	+/-	☞4	06/90 ▸	90443472	**819968**	92	Y
2.0 i,2.0 i 16V *JM07//D*	E	1998	X20XEV, C20NE	M		☞4	06/90 ▸ 06/97	90501081	**820071**	92	Y
2.0 i,2.0 i 16V *JM07//D*	E	1998	X20XEV, C20NE	A		☞4	06/90 ▸ 06/97	90501081	**820071**	92	Y
2.5 i V6,2.5 i V6 24V *JM07*	E	2498	C25XE, X25XE-170	M	+		08/93 ▸ 06/96	90502201	**820149**	92	Y
2.5 i V6,2.5 i V6 24V *JM07*	E	2498	C25XE, X25XE-170	A	+		08/93 ▸ 06/96	90502201	**820149**	92	Y
Carlton											
1.8,1.8 i *VF19/E/R, VF35/E/R, VM19 E/R, VM35/E/R*	E	1796	18SV, 18SEH	M		☞4	11/86 ▸ 08/92	90232012	**820071**	92	Y
1.8,1.8 i *VF19/E/R, VF35/E/R, VM19 E/R, VM35/E/R*	E	1796	18SV, 18SEH	A		☞4	11/86 ▸ 08/92	90232012	**820071**	92	Y
2.0 i *VF35D, VF19/D, VM19/I/T, VM35/I/T*	E	1998	C20NE, 20SE	M		☞4	11/86 ▸ 05/94	90232012	**820071**	92	Y
2.0 i *VF35D, VF19/D, VM19/I/T, VM35/I/T*	E	1998	C20NE, 20SE	A		☞4	11/86 ▸ 05/94	90232012	**820071**	92	Y
2.6 i *VM19L, VM35L*	E	2594	C26NE	M			09/90 ▸ 05/94	90067918	**819869**	92	Y
2.6 i *VM19L, VM35L*	E	2594	C26NE	A			09/90 ▸ 05/94	90067918	**819869**	92	Y
3.0 i	E	2968	30NE	M			10/89 ▸ 09/90	90067918	**819869**	92	Y
2.3 D,2.3 TD Turbo	D	2260	23YD, 23DTR	M			11/86 ▸ 05/94	90067918	**819869**	92	Y
Cavalier II (81>88)											
1.3 *9JF6/8/9, 9JM6/8/9*	E	1297	13S	M			08/81 ▸ 08/88	90200836	**819935**	92	Y
1.8 i *OFJ6/8/9, OJM6/8/9*	E	1796	18SE, 18E	M		☞4	10/82 ▸ 08/88	90232012	**820071**	92	Y
2.0 i	E	1998	20SEH, 20NE	M		☞4	09/86 ▸ 08/88	90232012	**820071**	92	Y
2.0 i	E	1998	20NE	M			03/87 ▸	90200836	**819935**	92	Y
Cavalier III (88>95)											
1.4 *JF19J, JF68J*	E	1389	14NV	M	+/-		11/88 ▸ 08/92	90200836	**819935**	92	Y
1.6,1.6 i *JF19/B/Z, JF68/B/Z, JM19 B/Z, JM68/B/Z*	E	1598	16SV, C16NZ	M	+/-		10/88 ▸ 10/95	90200836	**819935**	92	Y
1.6 *JM19B, JM68B*	E	1598	16SV	A	+/-		10/88 ▸ 08/92	90200836	**819935**	92	Y
1.8,1.8 i *JM19/R/T, JM68/R/T*	E	1796	18SV, C18NZ	M	+/-	☞4	10/89 ▸ 10/95	90232012	**820071**	92	Y
1.8,1.8 i *JM19/R/T, JM68/R/T*	E	1796	18SV, C18NZ	A	+/-	☞4	10/89 ▸ 10/95	90232012	**820071**	92	Y
2.0 i 16V,2.0 i Turbo *JM19I*	E	1998	20XEJ, C20LET	M	+/-	☞4	10/89 ▸	90443472	**819968**	92	Y
2.0 i,2.0 i 16V *JM19//F/H, JM68//F/H*	E	1998	X20XEV, 20NE, C20NE, 20SEH	M		☞4	10/88 ▸	90501081	**820071**	92	Y
2.0 i *JM19H, JM68H*	E	1998	C20NE, 20NE	A	+	☞4	10/88 ▸	90232012	**820071**	92	Y
2.5 i V6	E	2498	C25XE	M	+/-		03/93 ▸ 07/94	90502201	**820149**	92	Y
1.7 D Turbo 731418 ▸	D	1686	17TD	M	+/-	☞4,8	▸ 10/95	97087130	**820152**	85	Y

• **New** Nouveau **Nuevo** Novo **Nuovo** Nieuw **Neu** Yeni Новый Nou

VAUXHALL (.../...)

Cavalier III (88>95) (.../...)

		CC			AC			OE	Valeo	(°)C	
1.7 D Turbo	D	1686	17TD	M	+/-		09/91 ▸	94372762	**820072**	88	Y

Corsa I (93>2000)

1.0 i 12V	E	973	X10XE	M			04/97 ▸	90570620	**820151**	92	N
1.2 i	E	1196	C12NZ	M			04/93 ▸ 08/98	90200836	**819935**	92	Y
1.2 i 16V	E	1199	X12XE	M			04/97 ▸	90570620	**820151**	92	N
1.4 i	E	1389	C14SE, C14NZ	M			04/93 ▸ 08/98	90200836	**819935**	92	Y
1.4 i 16V	E	1389	X14XE	M			08/94 ▸	90412901	**820139**	92	Y
1.6 i 16V	E	1598	X16XE, C16XE	M			08/93 ▸	90412901	**820139**	92	Y
1.5 D,1.5 D Turbo	D	1488	X15DT, 15D, 15TD	M		☞4,8	04/93 ▸ 08/00	97087130	**820152**	85	Y
1.5 D,1.5 D Turbo	D	1488	X15DT, 15D, 15TD	M			04/93 ▸	94372762	**820072**	88	Y
1.7 D	D	1699	17D	M			02/96 ▸ 08/00	97142431	**820975**	85	Y
1.7 D	D	1699	17D	M		☞4,8	02/96 ▸	97087130	**820152**	85	Y

Corsa II (2000>2003)

1.0 i 12V	E	973	Z10XE	M			09/00 ▸ 08/03	12992692	**820151**	92	N
1.2 i 16V	E	1199	Z12XE	M			09/00 ▸ 08/03	12992692	**820151**	92	N
1.4 i 16V	E	1389	Z14XE	A			09/00 ▸ 08/03	9129907	**820593**	92	N
1.4 i 16V	E	1389	Z14XE	M			09/00 ▸ 08/03	9129907	**820593**	92	N
1.8 i 16V	E	1796	Z18XE	M			09/00 ▸ 08/03	90536262	**820502**	92	Y

Corsa II (2003>)

1.0 i 12V *AB68C, AC08C, AC68C* 1.0 i Twinport 12V *AE08C, AE68C, AB08/C*	E	998	Z10XEP	M			09/03 ▸	90570620	**820151**	92	N
1.2 i 16V *A.68E, AB08E, AB68E* 1.2 i Dualfuel 16V *AC08E, AC68E, AE08E AE68E, A.08/E*	E	1199	Z12-LPG, Z12XE	M			09/03 ▸	90570620	**820151**	92	N
1.4 i Twinport 16V *AE68G, AS08G, AS68G, AE08 G*	E	1364	Z14XEP	M			09/03 ▸	90570620	**820151**	92	N
1.4 i Twinport 16V	E	1364	Z14XEP	A			09/03 ▸	90570620	**820151**	92	N
1.8 i 16V *AS08K, AS68K*	E	1796	Z18XE	M			09/03 ▸	90536262	**820502**	92	Y
1.3 CDTI 16V *AB68F, A.08F, AE08F AS68F, AC68F, AB08F AE68F, AS08F, AC08F*	D	1248	Z13DT	M			09/03 ▸ 10/06	93177343	**820563**	88	Y

Corsa IV (2006>)

1.0 i 12V	E	998	Z10XEP	M			07/06 ▸	12992692	**820151**	92	N
1.2 i 16V	E	1229	Z12XEP	M			07/06 ▸	12992692	**820151**	92	N
1.4 i 16V	E	1364	Z14XEP	M			07/06 ▸	12992692	**820151**	92	N
1.4 i 16V	E	1364	Z14XEP	A			07/06 ▸	12992692	**820151**	92	N

Frontera (91>98)

2.0 i *52SUD, 55SUD*	E	1998	C20NE, X20SE	M		☞4	10/91 ▸ 09/98	90232012	**820071**	92	Y
2.2 i *54MWL*	E	2198	X22XE	M		☞4	04/95 ▸ 09/98	90501081	**820071**	92	Y
2.2 i *54MWL* ▸ TV817865	E	2198	X22XE	M			04/95 ▸ 09/98	90411948	**820140**	92	Y
2.4 i *53MWL*	E	2410	C24NE	M			10/91 ▸ 04/95	90067918	**819869**	92	Y
2.3 TD *5JMWL*	D	2260	23DTR	M			10/91 ▸ 04/95	90067918	**819869**	92	Y

Frontera (98>2005)

2.2 i 16V	E	2198	X22SE,Y22SE	M			10/98 ▸ 07/05	92063300	**820140**	92	Y

Meriva

1.6 i	E	1598	Z16SE/E4	M			05/03 ▸	90200836	**819935**	92	Y
1.6 i 16V	E	1598	Z16XE	M			05/03 ▸ 07/04	9129907	**820593**	92	N
1.8 i 16V	E	1796	Z18XE	M			05/03 ▸	24456401	**820502**	92	Y
1.3 CDTi 16V	D	1248	Y13DT,Z13DT,Z13DTJ	M			08/03 ▸ 07/10	93177343	**820563**	88	Y

Nova

1.0 *SF11M, SF19M, SF68M, SF08/M*	E	993	10S	M			04/83 ▸ 03/92	90200836	**819935**	92	Y
1.2,1.2 i *SF11N, SF19N, SF68N, SF08 N*	E	1196	12NV, C12NZ, 12ST	M			04/83 ▸ 03/93	90200836	**819935**	92	Y
1.3	E	1297	13SB	M			07/83 ▸ 09/89	90200836	**819935**	92	Y
1.4,1.4 i *SF19X, SF68X, SF08/J/X*	E	1389	C14NZ, 14NV	M			10/89 ▸ 03/93	90200836	**819935**	92	Y

• **New** Nouveau **Nuevo** Novo **Nuovo** Nieuw **Neu** Yeni Новый Nou

VAUXHALL (.../...)

Type Ctr.		CC		AC		2 3	OE	Valeo	(°)C	
Nova (.../...)										
1.6 i	E	1598	C16SE, E16SE	M		05/88 ▸ 03/93	90200836	**819935**	92	Y
1.5 D,1.5 TD *SF08/D, SF68/B/F*	D	1488	T4EC1, 4EC1	M		09/89 ▸ 03/93	94372762	**820072**	88	Y
Omega										
2.0 i,2.0 i 16V *F69, M35*	E	1998	X20XEV, X20SE	M		☞4 04/94 ▸	90501081	**820071**	92	Y
2.0 i,2.0 i 16V *F69, M35*	E	1998	X20XEV, X20SE	A		☞4 04/94 ▸	90501081	**820071**	92	Y
2.2 i 16V	E	2198	Z22XE	M		☞4 08/99 ▸	90501081	**820071**	92	Y
2.2 i 16V	E	2198	Z22XE	A		☞4 08/99 ▸	90501081	**820071**	92	Y
2.5 i V6 24V *F69, M35*	E	2498	X25XE-170	M		04/94 ▸	90502201	**820149**	92	Y
2.5 i V6 24V *F69, M35*	E	2498	X25XE-170	A		04/94 ▸	90502201	**820149**	92	Y
2.6 i V6 24V 21000001 ▸	E	2597	Y26SE	M		09/00 ▸	24420652	**820149**	92	Y
2.6 i V6 24V 21000001 ▸	E	2597	Y26SE	A		09/00 ▸	24420652	**820149**	92	Y
3.0 i,3.0 i V6 *F69, M35*	E	2962	X30XE	M		06/94 ▸	90502201	**820149**	92	Y
3.0 i,3.0 i V6 *F69, M35*	E	2962	X30XE	A		06/94 ▸	90502201	**820149**	92	Y
3.2 i V6 24V *F69, M35*	E	3175	Y32SE	A		09/00 ▸	24420652	**820149**	92	Y
2.0 Di 16V *F69*	D	1995	X20DTH	M		01/98 ▸	90529846	**820507**	92	Y
2.0 Di 16V *F69*	D	1995	X20DTH	A		01/98 ▸	90529846	**820507**	92	Y
2.5 TD *F69, M35*	D	2497	U25TD,X25TD	M		04/94 ▸	90509110	**820064**	80	Y
2.5 TD *F69, M35*	D	2497	U25TD,X25TD	A		04/94 ▸	90509110	**820064**	80	Y
Senator (87>93)										
2.5 i *P19*	E	2490	25NE	M		09/87 ▸ 09/90	90067918	**819869**	92	Y
2.6 i *VP19L*	E	2594	C26NE	M		09/90 ▸ 08/93	90067918	**819869**	92	Y
2.6 i *VP19L*	E	2594	C26NE	A		09/90 ▸ 08/93	90067918	**819869**	92	Y
3.0 i,3.0 i 24V *P19, VP19Q*	E	2968	C30NE, 30NE, C30SE	M		09/87 ▸ 08/93	90067918	**819869**	92	Y
3.0 i,3.0 i 24V *P19, VP19Q*	E	2968	30NE, C30SE, C30NE	A		09/87 ▸ 08/93	90067918	**819869**	92	Y
Signum (2003>2005)										
1.8 i 16V	E	1796	Z18XE	M		06/03 ▸ 09/05	24456401	**820502**	92	Y
3.2 i V6 24V	E	3175	Z32SE	M		06/03 ▸	24420652	**820149**	92	Y
3.2 i V6 24V	E	3175	Z32SE	A		06/03 ▸	24420652	**820149**	92	Y
1.9 CDTi 16V	D	1910	Z19DTH	M		04/04 ▸ 09/05	55202510	**820965**	88	Y
1.9 CDTi 16V	D	1910	Z19DTH	A		04/04 ▸ 09/05	55202510	**820965**	88	Y
2.0 DTi 16V	D	1995	Y20DTH	M		06/03 ▸	24420728	**820594**	92	Y
2.2 DTi 16V	D	2171	Y22DTR	M		06/03 ▸	24420728	**820594**	92	Y
2.2 DTi 16V	D	2171	Y22DTR	A		06/03 ▸	24420728	**820594**	92	Y
3.0 CDTi V6 24V	D	2958	Y30DT	A		06/03 ▸ 09/05	97361771	●**820553**	82	Y
3.0 CDTi V6 24V	D	2958	Y30DT	M		06/03 ▸ 09/05	97361771	●**820553**	82	Y
Signum B (2005>)										
1.8 i 16V	E	1796	Z18XE	M		10/05 ▸	24456401	**820502**	92	Y
1.9 CDTI,1.9 CDTI 16V	D	1910	Z19DT, Z19DTH	M		10/05 ▸	55202510	**820965**	88	Y
1.9 CDTI 16V	D	1910	Z19DTH	A		10/05 ▸	55202510	**820965**	88	Y
3.0 CDTI V6 24V	D	2958	Z30DT	A		10/05 ▸ 11/08	97361771	●**820553**	82	Y
3.0 CDTI V6 24V	D	2958	Z30DT	M		10/05 ▸ 11/08	97361771	●**820553**	82	Y
Sintra										
2.2 i *U06A*	E	2198	X22XE	M		☞4 03/96 ▸ 12/99	90501081	**820071**	92	Y
3.0 i V6 *U06B*	E	2962	X30XE	A		03/96 ▸ 12/99	90502201	**820149**	92	Y
Tigra										
1.4 i 16V *F07*	E	1389	X14XE	M		11/94 ▸	90412901	**820139**	92	Y
1.4 i 16V *F07*	E	1389	X14XE	A		02/95 ▸	90412901	**820139**	92	Y
1.6 i 16V *F07*	E	1598	X16XE	M		11/94 ▸	90412901	**820139**	92	Y
Tigra Twintop										
1.4 i Twinport 16V	E	1364	Z14XEP	M		07/04 ▸	12992692	**820151**	92	N
1.8 i 16V	E	1796	Z18XE	M		07/04 ▸	24456401	**820502**	92	Y
Vectra (95>2002)										
1.6 i 16V *JF19, JF68*	E	1598	X16XEL	M		10/95 ▸	90412901	**820139**	92	Y
1.6 i *JF19, JF68*	E	1598	X16SZR	M		10/95 ▸	90200836	**819935**	92	Y

• **New** Nouveau **Nuevo** Novo **Nuovo** Nieuw **Neu** Yeni Новый Nou

Type Ctr.		cc		AC		2 3	OE	Valeo	(°)C	
VAUXHALL (.../...)										
Vectra (95>2002) (.../...)										
1.6 i 16V *JF19, JF68*	E	1598	X16XEL	A		10/95 ▸	90412901	**820139**	92	Y
1.8 i 16V *JF35, JF68, JF19*	E	1799	X18XE	M	☞4	10/95 ▸	90501081	**820071**	92	Y
1.8 i 16V *JF35, JF68, JF19*	E	1799	X18XE	A	☞4	10/95 ▸	90501081	**820071**	92	Y
2.0 i 16V *JF35, JF68, JF19*	E	1998	X20XEV	M	☞4	10/95 ▸	90501081	**820071**	92	Y
2.0 i 16V *JF35, JF68, JF19*	E	1998	X20XEV	A	☞4	10/95 ▸	90501081	**820071**	92	Y
2.5 i V6 24V *JF35, JF68, JF19*	E	2498	X25XE-170, X25XE-195	M		10/95 ▸	90502201	**820149**	92	Y
2.5 i V6 24V *JF35, JF68, JF19*	E	2498	X25XE-170	A		10/95 ▸	90502201	**820149**	92	Y
2.6 i V6 24V *JF35*	E	2597	Y26SE	M		09/00 ▸	90502201	**820149**	92	Y
17080725 ▸ 11162841										
2.6 i V6 24V *JF35*	E	2597	Y26SE	A		09/00 ▸	90502201	**820149**	92	Y
17080725 ▸ 17080724										
1.7 TD *JF19, JF68*	D	1686	X17DT	M	☞4,8	10/95 ▸ 07/96	97087130	**820152**	85	Y
2.0 Di 16V *JF35, JF68, JF19*	D	1995	X20DTL	M		08/96 ▸	90529846	**820507**	92	Y
2.2 DTI 16V	D	2171	Y22DTR	M		09/00 ▸ 03/02	24435781	**820592**	92	Y
Vectra (2002>2005)										
1.8 i LPG 16V	G	1796	Z18XE-GPL	M		04/02 ▸	24456401	**820502**	92	Y
1.8 i 16V	E	1796	Z18XE, Z18XEL	M		04/02 ▸	24456401	**820502**	92	Y
3.2 i V6 24V	E	3175	Z32SE	M		04/02 ▸	24420652	**820149**	92	Y
3.2 i V6 24V	E	3175	Z32SE	A		04/02 ▸	24420652	**820149**	92	Y
1.9 CDTI,1.9 CDTI 16V	D	1910	Z19DT, Z19DTH	M		04/04 ▸ 09/05	55202510	**820965**	88	Y
1.9 CDTI 16V	D	1910	Z19DTH	A		04/04 ▸ 09/05	55202510	**820965**	88	Y
2.0 DTI 16V	D	1995	Y20DTH	M		04/02 ▸	24420728	**820594**	92	Y
2.2 DTI 16V	D	2171	Y22DTR	M		04/02 ▸	24420728	**820594**	92	Y
2.2 DTI 16V	D	2171	Y22DTR	A		04/02 ▸	24420728	**820594**	92	Y
3.0 CDTi V6 24V	D	2958	Y30DT	A		07/03 ▸ 09/05	97361771	●**820553**	82	Y
3.0 CDTi V6 24V	D	2958	Y30DT	M		07/03 ▸ 09/05	97361771	●**820553**	82	Y
Vectra (2005>)										
1.8 i 16V	E	1796	Z18XE	M		10/05 ▸	24456401	**820502**	92	Y
1.9 CDTI,1.9 CDTI 16V	D	1910	Z19DTH, Z19DT, Z19DTL	M		10/05 ▸	55202510	**820965**	88	Y
1.9 CDTI 16V	D	1910	Z19DTH	A		10/05 ▸	55202510	**820965**	88	Y
3.0 CDTI V6 24V	D	2958	Z30DT	A		10/05 ▸ 02/09	97361771	●**820553**	82	Y
3.0 CDTI V6 24V	D	2958	Z30DT	M		10/05 ▸ 02/09	97361771	●**820553**	82	Y
VX 220										
2.0 i Turbo 16V	E	1998	Z20LER, Z20LET	M	☞4	12/02 ▸	90501081	**820071**	92	Y
Zafira (99>2003)										
1.6 i 16V *WOL0T*	E	1598	X16XEL	M	☞8	05/99 ▸	90573326	**820504**	92	Y
1.6 i 16V *F75 L*	E	1598	X16XEL	M		05/99 ▸ 06/03	9129907	**820593**	92	N
1.8 i 16V *WOL0T*	E	1799	X18XE1	M		05/99 ▸	90536262	**820502**	92	Y
1.8 i 16V *WOL0T*	E	1799	X18XE1	A		05/99 ▸	90536262	**820502**	92	Y
2.0 i Turbo 16V *WOL0T*	E	1998	Z20LET	M	☞4	10/01 ▸ 06/03	90501081	**820071**	92	Y
2.0 Di 16V *WOL0T*	D	1995	X20DTL	M		05/99 ▸	90572899	**820503**	92	Y
Zafira (2003>)										
1.6 i GNV 16V *QM75I, QG75I*	G	1598	Z16YNG	M		07/03 ▸ 06/05	9129907	**820593**	92	N
1.6 i 16V *QG75I, QM75I*	E	1598	Z16XE	M		07/03 ▸ 06/05	9129907	**820593**	92	N
1.8 i 16V *QD75K, QX75K*	E	1796	Z18XE	M		07/03 ▸ 06/05	24456401	**820502**	92	Y
32000001 ▸										
1.8 i 16V *QX75K*	E	1796	Z18XE	A		07/03 ▸ 06/05	24456401	**820502**	92	Y
32000001 ▸										
2.2 DTI 16V *QD75P, QX75P*	D	2171	Y22DTR	M		07/03 ▸	24447862	**820590**	92	Y
Zafira II (2005>)										
2.0 i Turbo 16V	E	1998	Z20LER	M	☞4	07/05 ▸	90501081	**820071**	92	Y
1.9 CDTI,1.9 CDTI 16V	D	1910	Z19DTH, Z19DTL, Z19DT	M		07/05 ▸	55202510	**820965**	88	Y
1.9 CDTI,1.9 CDTI 16V	D	1910	Z19DTH, Z19DT	A		07/05 ▸	55202510	**820965**	88	Y
VAUXHALL										
Arena										
1.9 D *TF1J*	D	1870	F8Q.6.06	M		01/98 ▸	9110719	**820008**	89	Y

• **New** Nouveau **Nuevo** Novo **Nuovo** Nieuw **Neu** Yeni Новый Nou

Type Ctr.		CC		AC		2 3	OE	Valeo	(°)C	
VAUXHALL (.../...)										
Arena (.../...)										
2.5 D *TB1G, THBG*	D	2445	S8U.7.82, S8U.7.58	M		03/97 ▸	9110719	**820008**	89	Y
Astramax										
1.4,1.4 i	E	1389	14NV, X14NZ, C14NZ, C14SE	M		10/91 ▸ 03/98	90200836	**819935**	92	Y
1.6 i	E	1598	X16SZ, C16NZ	M		10/91 ▸ 03/98	90200836	**819935**	92	Y
1.6 i	E	1598	16LZ2	M		1997 ▸ 03/98	90322033	**820501**	92	Y
1.8 i 16V 14058052 ▸	E	1799	C18XEL	M	☞4	08/94 ▸ 03/98	90501081	**820071**	92	Y
1.8 i 16V ▸ 14058051	E	1799	C18XEL	M		08/94 ▸ 03/98	90411948	**820140**	92	Y
1.7 D,1.7 D Turbo	D	1699	17DR, X17DTL	M		10/91 ▸ 03/98	90009956	**819848**	92	Y
Brava										
2.3 *TFR16, TFS16*	E	2254	4ZDI	M	☞7,8	10/88 ▸ 06/96	94336069	**819966**	82	Y
2.2 D *TFR52, TFS52*	D	2238	C233	M		10/88 ▸ 06/96	97089891	**820506**	82	Y
2.5 TD *TFS54, TFR54*	D	2499	4JA1	M		07/96 ▸ 09/02	97089891	**820506**	82	Y
Combo										
1.4 i	E	1389	C14NZ	M		10/93 ▸ 09/01	90200836	**819935**	92	Y
1.7 D	D	1686	X17D	M	☞4,8	10/93 ▸ 09/01	97087130	**820152**	85	Y
Combo (2002>)										
1.4 i Twinport GPL 16V	G	1364	Z14XEP	M		07/04 ▸	12992692	**820151**	92	N
1.6 i CNG	G	1598	Z16YNG	M		04/05 ▸	9129907	**820593**	92	N
1.6 i GPL	G	1598	Z16SE	M		10/01 ▸	90200836	**819935**	92	Y
1.4 i Twinport 16V	E	1364	Z14XEP	M		07/04 ▸	12992692	**820151**	92	N
1.6 i	E	1598	Z16SE/E4	M		10/01 ▸ 06/04	90200836	**819935**	92	Y
1.3 CDTi 16V	D	1248	Y13DT,Z13DT,Z13DTJ	M		07/04 ▸	93177343	**820563**	88	Y
Midi										
2.0 *98370, M8170, M8370, M8537, 9817/0*	E	1994	4ZC1	M	☞7,8	06/90 ▸ 08/97	94336069	**819966**	82	Y
2.0 TD *98670*	D	1995	4FC1T	M		06/90 ▸ 12/90	97089891	**820506**	82	Y
2.2 D *M8570, M8770, 98570, 98770*	D	2189	4FD1	M		06/90 ▸ 10/94	94214962	**820506**	82	Y
2.4 TD	D	2380	4FG1-T	M		10/94 ▸ 08/97	97089891	**820506**	82	Y
Movano										
1.9 Dti *FD, JD* C000140 ▸	D	1870	F9Q.7.70	M		08/00 ▸ 07/02	9110719	**820008**	89	Y
1.9 Dti *FD, JD*	D	1870	F9Q.7.72	M		08/00 ▸ 07/02	9112305	**820527**	89	Y
2.5 D *FD, JD, UD, ED*	D	2445	S8U.7.72	M	☞4,8	10/98 ▸ 10/01	9161123	**820432**	82	Y
2.8 Dti *FD, JD, UD, ED*	D	2800	S9W.7.02, S9W.7.00	M	☞4,8	10/98 ▸ 10/01	9161123	**820432**	82	Y
Vivaro (2001>2006)										
2.0 i 16V *1F05M, 1G05M*	E	1998	F4R.7.20	M	☞4	08/01 ▸	91159950	**820025**	89	Y
1.9 DI,1.9 DTI *1F05L, 1G05L*	D	1870	F9Q.7.60,F9Q.7.62	M		08/01 ▸ 06/06	9112305	**820527**	89	Y
VOLKSWAGEN										
Bora										
1.4 i 16V *1J2/0/1/2, 1J6/0/1/2*	E	1390	AHW, AKQ, AXP, BCA, APE	M		09/98 ▸	032121110B	**820962**	87	Y
1.6 i,1.6 i 16V 16V *1J2/0/1/2/3/5, 1J6/0/1/2/3/5*	E	1595	AKL, AEH, ATN	M		09/98 ▸ 05/05	050121113C	**820171**	87	Y
1.6 i 16V,1.6 i 16V 16V *1J2/0/1/2/3/5, 1J6/0/1/2/3/5*	E	1595	AUS, BCB, AZD, ATN	M		08/99 ▸	032121110B	**820962**	87	Y
1.6 i *1J2/0/1/2/3, 1J6/0/1/2/3*	E	1595	AVU	A		09/00 ▸ 04/02	032121110B	**820962**	87	Y
1.6 i *1J2/0/1/2/3/5, 1J6/0/1/2/3/5*	E	1595	AEH, AKL, AVU	A		09/98 ▸ 05/05	050121113C	**820171**	87	Y
1.6 i *1J2/0/1/2/3/5, 1J6/0/1/2/3/5*	E	1595	BFQ, APF	A		05/99 ▸	06A121111A	**820959**	100	Y
1.8 i 20V,1.8 i Turbo 20V *1J2/0/1/2/3/5, 1J6/0/1/2/3/5*	E	1781	AUM, AGN, AUQ, AGU	M		02/99 ▸ 05/05	050121113C	**820171**	87	Y
1.8 i 20V,1.8 i Turbo 20V *1J2/0/1/2/3/5, 1J6/0/1/2/3/5*	E	1781	AGN, ARX, AUM, AGU	A		02/99 ▸ 05/05	050121113C	**820171**	87	Y
2.0 i *1J2/0/1/2/3/5, 1J6/0/1/2/3/5*	E	1984	AQY, APK, AZJ, AZH	M		09/98 ▸ 05/05	050121113C	**820171**	87	Y
2.0 i *1J2/0/1/2/3/5, 1J6/0/1/2/3/5*	E	1984	AZJ, AQY, APK, AZH	A		09/98 ▸ 05/05	050121113C	**820171**	87	Y

• **New** Nouveau **Nuevo** Novo **Nuovo** Nieuw **Neu** Yeni Новый Nou

Type Ctr.	cc		AC		2 3	OE	Valeo	(°)C	
VOLKSWAGEN (.../...)									
Bora (.../...)									
2.3 i V5 20V *1J2/0/1/2/3, 1J6/0/1/2/3*	E	2324	AQN	M			01/03 ▸	022121113	**820958**	80	Y
2.3 i V5 20V *1J2/0/1/2/3, 1J6/0/1/2/3*	E	2324	AQN	A			05/02 ▸	022121113	**820958**	80	Y
2.3 i V5 20V *1J2/0/1/2/3/5, 1J6/0/1/2 3/5* ▸ 1J-X800 000	E	2324	AGZ	M		☞4	09/98 ▸ 02/01	044121113	**820168**	87	Y
2.3 i V5 20V *1J2/0/1/2/3/5, 1J6/0/1/2 3/5* ▸ 1J-X800 000	E	2324	AGZ	A		☞4	09/98 ▸ 02/01	044121113	**820168**	87	Y
2.3 i V5 20V *1J23, 1J62, 1J65, 1J60 1J22, 1J25, 1J20, 1J61 1J21, 1J63*	E	2324	AGZ,AQN	A			09/98 ▸ 05/05	075121113D	**820065**	87	Y
2.3 i V5 20V *1J63, 1J65, 1J22, 1J25 1J23, 1J20, 1J62, 1J21 1J61, 1J60*	E	2324	AGZ,AQN	M			01/99 ▸ 05/05	075121113D	**820065**	87	Y
2.8 i VR6 24V *1J2/3/6, 1J6/3/6*	E	2792	BDE	M			01/03 ▸	022121113	**820958**	80	Y
2.8 i VR6 24V *1J2/3/6, 1J6/3/6*	E	2792	BDE	A			05/01 ▸ 05/03	022121113	**820958**	80	Y
2.8 i VR6 24V *1J65, 1J63, 1J25, 1J23 1J26*	E	2792	AQP,AUE	A			05/99 ▸ 04/01	075121113D	**820065**	87	Y
2.8 i VR6 24V *1J26, 1J66, 1J25, 1J63 1J23, 1J65*	E	2792	AQP,AUE,BDE	M			05/99 ▸ 05/03	075121113D	**820065**	87	Y
1.9 SDi,1.9 TDi *1J2/0/1/2/3/5, 1J6/0/1/2 3/5*	D	1896	AJM, AHF, AGR, AUY, ASV, ALH ATD, AGP, AXR, ASZ, AQM, ARL	M		☞4	09/98 ▸ 05/05	044121113	**820168**	87	Y
1.9 TDi *1J2/0/1/2/3/5, 1J6/0/1/2 3/5*	D	1896	AHF, ATD, AJM, ASZ, AUY, ALH AGR, ARL	A		☞4	09/98 ▸ 05/05	044121113	**820168**	87	Y
1.9 TDi *1J60, 1J23, 1J62, 1J20 1J63, 1J21, 1J22, 1J61*	D	1896	ARL,ASZ,ATD	A			05/00 ▸ 05/03	075121113D	**820065**	87	Y
1.9 TDi *1J63, 1J62*	D	1896	ARL	M			05/01 ▸ 05/05	075121113D	**820065**	87	Y
Corrado									
1.8 i 16V,1.8 i G60 *5090*	E	1781	PG, KR	M		☞4	09/88 ▸ 07/93	044121113	**820168**	87	Y
1.8 i 16V,1.8 i G60 *5090*	E	1781	KR, PG	M			09/88 ▸ 07/93	056121113D	**819868**	87	Y
1.8 i 16V,1.8 i G60 *5090*	E	1781	PG, KR	A			04/89 ▸ 07/92	056121113D	**819868**	87	Y
1.8 i 16V,1.8 i G60 *5090*	E	1781	PG, KR	A		☞4	04/89 ▸ 07/92	044121113	**820168**	87	Y
2.0 i,2.0 i 16V *5090*	E	1984	9A, ADY, 2E	M			08/91 ▸ 07/95	056121113D	**819868**	87	Y
2.0 i,2.0 i 16V *5090*	E	1984	2E, 9A, ADY	M		☞4	08/91 ▸ 07/95	044121113	**820168**	87	Y
2.0 i,2.0 i 16V *5090*	E	1984	9A, 2E, ADY	A		☞4	08/91 ▸ 07/95	044121113	**820168**	87	Y
2.0 i,2.0 i 16V *5090*	E	1984	9A, 2E, ADY	A			08/91 ▸ 07/95	056121113D	**819868**	87	Y
2.9 E VR6 *5090*	E	2861	ABV	A			08/91 ▸ 07/95	075121113D	**820065**	87	Y
2.9 E VR6 *5090*	E	2861	ABV	M			08/91 ▸ 07/95	075121113D	**820065**	87	Y
Derby (77>81)									
0.9 *865/0/1/2, 866/0/1/2* ▸ 8692500001 ▸	E	895	HA	M		☞10	01/77 ▸ 09/81	036121113B	**819854**	92	Y
0.9 *865/0/1/2, 866/0/1/2* ▸ 8682600000	E	895	HA	M		☞10	01/77 ▸	036121113	**819853**	87	Y
1.1 *865/0/1/2, 866/0/1/2* ▸ 8692500001 ▸	E	1093	HB	M		☞10	01/77 ▸ 09/81	036121113B	**819854**	92	Y
1.1 *865* ▸ 8692500001 ▸	E	1093	HD	M		☞10	01/77 ▸ 07/78	036121113B	**819854**	92	Y
1.1 *865/0/1/2, 866/0/1/2* ▸ 8682600000	E	1093	HB	M		☞10	01/77 ▸	036121113	**819853**	87	Y
1.1 *865* ▸ 8682600000	E	1093	HD	M		☞10	01/77 ▸	036121113	**819853**	87	Y
1.3 *865/0/1/2, 866/1/2* ▸ 8692500001 ▸	E	1272	HJ, HH	M		☞10	01/77 ▸ 09/81	036121113B	**819854**	92	Y
1.3 *865/0/1/2, 866/1/2* ▸ 8682600000	E	1272	HJ, HH	M		☞10	01/77 ▸	036121113	**819853**	87	Y
Derby (81>84)									
1.05 *873/0/1/2*	E	1043	GL	M		☞10	10/81 ▸ 10/84	036121113B	**819854**	92	Y
1.1 *873/0/1/2/A/B/C*	E	1093	HB	M		☞10	10/81 ▸ 07/83	036121113B	**819854**	92	Y
1.3 *873/0/1/2*	E	1272	HK, HH, GK	M		☞10	10/81 ▸ 10/84	036121113B	**819854**	92	Y
Eos									
3.2 i V6 24V *1F73*	E	3189	BUB	A			05/06 ▸	022121113	**820958**	80	Y
2.0 TDi *1F73*	D	1968	BMM	M		☞4	05/06 ▸	03G121113A	**820168**	87	Y

• **New** Nouveau **Nuevo** Novo **Nuovo** Nieuw **Neu** Yeni Новый Nou

VOLKSWAGEN (.../...)

Eos (.../...)

2.0 TDi	*1F73*	D	1968	BMM	A		☞4	05/06 ▸	03G121113A	**820168**	87	Y

Fox

1.4 i	*5Z1/1/4*	E	1390	BKR	M			11/04 ▸	032121110B	**820962**	87	Y

Golf I (74>83)

1.1	*171/0/1/2, 172/0/1/2, 173/0/1/2 174/0/1/2*	E	1093	FA, FJ	M		☞4	04/74 ▸ 07/79	044121113	**820168**	87	Y
1.1	*171/0/1/2, 172/0/1/2, 173/0/1/2 174/0/1/2*	E	1093	FA, FJ	M		☞10	04/74 ▸ 07/78	036121113	**819853**	87	Y
1.1	*171/0/1/2, 172/0/1/2, 173/0/1/2 174/0/1/2*	E	1093	FA, FJ	M			04/74 ▸ 07/79	056121113A	**819867**	80	Y
1.1	*171/0/1/2, 172/0/1/2, 173/0/1/2 174/0/1/2*	E	1093	GG	M		☞10	08/79 ▸ 12/83	036121113B	**819854**	92	Y
1.3	*171/0/1/2, 172/0/1/2, 173/0/1/2 174/0/1/2*	E	1272	GF, GS	M		☞10	08/79 ▸ 12/83	036121113B	**819854**	92	Y
1.5	*171/0/1/2, 172/0/1/2, 173/0/1/2 174/0/1/2*	E	1457	JB, EH, GH	M		☞4	08/77 ▸ 12/83	044121113	**820168**	87	Y
1.5	*171/0/1*	E	1457	JB	M			08/77 ▸ 07/78	056121113A	**819867**	80	Y
1.5	*171/0/1/2, 172/0/1/2, 173/0/1/2 174/0/1/2*	E	1457	GH, EH, JB	A		☞4	08/77 ▸ 12/83	044121113	**820168**	87	Y
1.5	*1711*	E	1457	JB	A		☞10	08/78 ▸ 07/83	036121113B	**819854**	92	Y
1.5	*171/0/1, 172/0/1, 173/0/1, 174/0/1*	E	1471	FH, FK	M			02/74 ▸ 12/75	056121113A	**819867**	80	Y
1.5	*171/0/1, 172/0/1, 173/0/1, 174/0/1*	E	1471	FK, FH	M		☞4	02/74 ▸ 12/75	044121113	**820168**	87	Y
1.5	*171/0/1, 172/0/1, 173/0/1, 174/0/1*	E	1471	FH, FK	A			08/74 ▸ 12/75	056121113A	**819867**	80	Y
1.5	*171/0/1, 172/0/1, 173/0/1, 174/0/1*	E	1471	FK, FH	A		☞4	08/74 ▸ 12/75	044121113	**820168**	87	Y
1.5	*1710*	E	1471	FH	A			09/74 ▸ 12/75	050121113C	**820171**	87	Y
1.6	*171/0/1/2/3, 172/0/1/2/3, 173/0/1/2 174/0/1/2*	E	1588	FV, FN, EG, FP, FT	M			08/75 ▸ 07/82	056121113A	**819867**	80	Y
1.6	*171/0/1/2/3, 172/0/1/2/3, 173/0/1/2 174/0/1/2*	E	1588	EM, FP, FV, FN, FT, EJ, EG	M		☞4	08/75 ▸ 12/83	044121113	**820168**	87	Y
1.6	*171/0/1/2, 172/0/1/2, 173/0/1/2 174/0/1/2*	E	1588	FP, FV, FT, FN	A			08/75 ▸ 07/79	056121113A	**819867**	80	Y
1.6	*171/0/1/2, 172/0/1/2, 173/0/1/2 174/0/1/2*	E	1588	FP, FV, EM, FN, FT, EJ	A		☞4	08/75 ▸ 12/83	044121113	**820168**	87	Y
1.7 i	*172/0/1/2, 174/0/1/2*	E	1716	EN	M		☞4	08/80 ▸ 07/83	044121113	**820168**	87	Y
1.7 i	*172/0/1/2, 174/0/1/2*	E	1716	EN	A		☞4	08/80 ▸ 12/83	044121113	**820168**	87	Y
1.8	*1723, 1733, 171/3*	E	1781	DX, JJ	M		☞4	08/82 ▸ 12/83	044121113	**820168**	87	Y
1.5 D	*171/0/1/2, 172/0/1/2, 173/0/1/2 174/0/1/2*	D	1471	CK	M			08/76 ▸ 07/80	056121113A	**819867**	80	Y
1.5 D	*171/0/1/2, 172/0/1/2, 173/0/1/2 174/0/1/2*	D	1471	CK	A			08/77 ▸ 07/78	056121113A	**819867**	80	Y
1.6 D,1.6 TD	*171/0/1/2/T, 172/0/1/2 173/0/1/2/T, 174/0/1/2/A*	D	1588	JK, CR, CY	M		☞4	08/80 ▸ 12/84	044121113	**820168**	87	Y
1.6 D	*171/0/1/2, 172/0/1/2, 173/0/1/2 174/0/1/2/A*	D	1588	CR, JK	A		☞4	08/81 ▸ 12/83	044121113	**820168**	87	Y

Golf I Cabriolet (79>93)

1.1	*1542, 1552*	E	1093	FA	M			01/79 ▸ 07/79	056121113A	**819867**	80	Y
1.1	*1542, 1552*	E	1093	FA	M		☞4	01/79 ▸ 07/79	044121113	**820168**	87	Y
1.1	*1542, 1552*	E	1093	GG	M		☞10	08/79 ▸ 07/83	036121113B	**819854**	92	Y
1.3 i	*1552*	E	1272	HK	M			08/86 ▸ 08/93	056121113D	**819868**	87	Y
1.3 i	*1552*	E	1272	HK	M		☞4	08/86 ▸ 08/93	044121113	**820168**	87	Y
1.5	*1542, 1552*	E	1457	JB, EH, GH	M		☞4	01/79 ▸ 08/83	044121113	**820168**	87	Y
1.5	*1542, 1552*	E	1457	GH, JB, EH	A		☞4	01/79 ▸ 07/90	044121113	**820168**	87	Y
1.5	*1552*	E	1457	EH	A			08/86 ▸ 07/90	056121113D	**819868**	87	Y
1.6,1.6 i	*1542, 1552*	E	1588	EM, FV, EG, EJ, FN	M		☞4	01/79 ▸ 07/83	044121113	**820168**	87	Y
1.6,1.6 i	*1542, 1552*	E	1588	EG, FN, FV	M			01/79 ▸ 07/82	056121113A	**819867**	80	Y
1.6	*1552*	E	1588	FV	M			08/83 ▸ 07/90	056121113D	**819868**	87	Y
1.6,1.6 i	*1542, 1552*	E	1588	EM, FV, FN, EJ	A		☞4	01/79 ▸ 07/90	044121113	**820168**	87	Y
1.6	*1542, 1552*	E	1588	FV, FN	A			01/79 ▸ 07/79	056121113A	**819867**	80	Y
1.6	*1552*	E	1588	EJ, FN	A			08/83 ▸ 12/92	056121113D	**819868**	87	Y
1.6	*154/2/4, 155/2/4*	E	1595	EW, HN	M			08/83 ▸	056121113D	**819868**	87	Y
1.6	*154/2/4, 155/2/4*	E	1595	EW, HN	M		☞4	08/83 ▸	044121113	**820168**	87	Y

• **New** Nouveau **Nuevo** Novo **Nuovo** Nieuw **Neu** Yeni Новый Nou

			Type Ctr.		cc			AC		2 3	OE	Valeo	(°)C	
VOLKSWAGEN (.../...)														
Golf I Cabriolet (79>93) (.../...)														
1.6	*155/2/4*	E		1595	EW, HN	A			08/83 ▸	056121113D	**819868**	87	Y
1.6	*154/2/4, 155/2/4*	E		1595	HN, EW	A		☞4	08/83 ▸	044121113	**820168**	87	Y
1.7 i	*1552*	E		1716	EN	M		☞4	08/80 ▸ 07/81	044121113	**820168**	87	Y
1.7 i	*1552*	E		1716	EN	A			08/83 ▸ 12/92	056121113D	**819868**	87	Y
1.7 i	*1552*	E		1716	EN	A		☞4	08/83 ▸ 12/92	044121113	**820168**	87	Y
1.8,1.8 i	*154/2/4/A, 155/2/4/A/J/K*	E		1781	EX, JJ, KT, DX, 2H, JH	M		☞4	08/82 ▸ 08/93	044121113	**820168**	87	Y
1.8,1.8 i	*154/2/4/A, 155/2/4/A/J/K*	E		1781	KT, JH, EX, DX, 2H	M			08/83 ▸ 08/93	056121113D	**819868**	87	Y
1.8 i	*1554*	E		1781	KT	M		☞4	08/86 ▸ 12/87	030121113	**820132**	84	Y
1.8,1.8 i	*154/2, 155/2/4/J/K*	E		1781	EX, JH, 2H	A			08/83 ▸ 08/93	056121113D	**819868**	87	Y
1.8,1.8 i	*154/2/4, 155/2/4/J/K*	E		1781	EX, JH, 2H	A		☞4	08/83 ▸ 08/93	044121113	**820168**	87	Y
Golf II (83>91)														
1.05	*1920, 191/0/1/2, 1940, 193/0/1/2*	E		1043	GN, HZ	M		☞10	08/83 ▸ 07/86	036121113B	**819854**	92	Y
1.05	*1920, 191/0/1/2, 1940, 193/0/1/2 1G1/1/2/3*	E		1043	HZ	M		☞4	05/85 ▸ 10/91	030121113	**820132**	84	Y
1.3	*1920, 191/0/1/2, 193/0/1/2, 194/0/1*	E		1272	GT, HK	M		☞10	08/83 ▸ 07/86	036121113B	**819854**	92	Y
1.3	*191/0, 1G12, 193/0/1*	E		1272	MH, 2G	M			08/85 ▸ 10/91	056121113D	**819868**	87	Y
1.3	*1920, 191/0/1/2/H/J, 193/0/1/2/G/H/J, 194/0/1, 1G1/0/1/2/3*	E		1272	2G, NZ, MH, NU	M		☞4	08/85 ▸ 07/92	030121113	**820132**	84	Y
1.6	*1920, 191/0/1/2/H/J, 193/0/1/2/G/H/J, 194/1/2, 1G1/1/2/3*	E		1595	RF, HM, EZA, EZ, PN, ABN, ABX	M		☞4	08/83 ▸ 07/92	044121113	**820168**	87	Y
1.6	*1920, 191/0/1/2, 193/0/1/2, 194/0/1 2, 1G1/1/2/3*	E		1595	RF, EZ, HM, EZA, PN	A		☞4	08/83 ▸ 07/92	044121113	**820168**	87	Y
1.8 G60	*1G47*	E		1763	1H	M			08/88 ▸ 07/89	056121113D	**819868**	87	Y
1.8 G60	*1G17, 1G47*	E		1763	1H	M		☞4	08/88 ▸ 12/89	044121113	**820168**	87	Y
1.8,1.8 G60,1.8 i 1.8 i 16V	*168Z, 167/5, 191/0/1/2/3 G/H/J/N/S/T/U/V/W/Z, 192 0/1/2/3/T/U/V/Z, 193/0/1 2/3/7/G/H/J/K/N/P/S/T/U/V W/Z, 194/0/1/2/3/7/T/V/Z 1G47, 1G1/1/2/3/5/7/J*	E		1781	HV, GU, RH, PF, GX, RV, EV 1P, PB, PG, RP, PL, GZ, KR RD, HT	M		☞4	08/83 ▸ 10/91	044121113	**820168**	87	Y
1.8,1.8 G60,1.8 i	*168Z, 191/J/V/W/Z, 192/V Z, 1G15, 1G47, 193/2/U/V*	E		1781	GX, GU, RH, PG	M			08/85 ▸ 07/91	056121113D	**819868**	87	Y
1.8,1.8 i	*191/0/1/2/G/H/J, 192/0/1 2, 193/0/1/2/7/G/H/J/K/T 194/0/1/2/7/G, 1G1/1/2/3 5*	E		1781	GU, GX, HV, RP, RV, RH	A		☞4	08/83 ▸ 10/91	044121113	**820168**	87	Y
1.8	*1932*	E		1781	GU	A			08/85 ▸ 07/86	056121113D	**819868**	87	Y
1.6 D,1.6 TD	*191/0/1/2/T/V, 192/0/1/2 193/0/1/2/7/T, 194/0/1/2 1G1/1/2/3/5*	D		1588	JP, JR, 1V, MF, RA, ME, SB	M		☞4	08/83 ▸ 07/92	044121113	**820168**	87	Y
1.6 D	*1920, 191/0/1/2, 193/0/1/2, 194/0/2 1G1/1/2/3*	D		1588	JP	A		☞4	08/86 ▸ 10/91	044121113	**820168**	87	Y
Golf II Cabriolet (93>98)														
1.6 i	*1E7/3/5*	E		1598	AEK	M			07/94 ▸ 12/95	056121113D	**819868**	87	Y
1.6 i	*1E7/3/5/E*	E		1598	AKS, AEK, AFT	M		☞4	07/94 ▸ 02/98	044121113	**820168**	87	Y
1.6 i	*1E7/3/5*	E		1598	AEK	A			07/94 ▸ 12/95	056121113D	**819868**	87	Y
1.6 i	*1E7/3/5/E*	E		1598	AFT, AEK	A		☞4	07/94 ▸ 02/98	044121113	**820168**	87	Y
1.8 i	*1E7/3/5*	E		1781	AAM, ANP, ABS, ADZ, ANN	M		☞4	09/93 ▸ 02/98	044121113	**820168**	87	Y
1.8 i	*1E7/3/5*	E		1781	ABS, AAM, ANP	M			09/93 ▸ 12/97	056121113D	**819868**	87	Y
1.8 i	*1E7/3/5*	E		1781	ABS, ADZ, ANP	A		☞4	09/93 ▸ 02/98	044121113	**820168**	87	Y
1.8 i	*1E7/3/5*	E		1781	ABS, ANP	A			09/93 ▸ 02/98	056121113D	**819868**	87	Y
2.0 i	*1E7/3/5*	E		1984	ADY, AKR, AGG, 2E	M		☞4	09/93 ▸ 02/98	044121113	**820168**	87	Y
2.0 i	*1E7/3/5*	E		1984	AGG, 2E	M			09/93 ▸ 12/97	056121113D	**819868**	87	Y
2.0 i	*1E7/3/5*	E		1984	AGG, 2E	A			09/93 ▸ 12/97	056121113D	**819868**	87	Y
2.0 i	*1E7/3/5*	E		1984	AGG, ADY, 2E	A		☞4	09/93 ▸ 12/97	044121113	**820168**	87	Y
1.9 TDi	*1E7/3/5*	D		1896	1Z, AHU, ALE, AFN	M		☞4	08/95 ▸ 02/98	044121113	**820168**	87	Y
1.9 TDi	*1E7/3/5*	D		1896	1Z, AHU	A		☞4	08/95 ▸ 12/97	044121113	**820168**	87	Y
Golf III (91>97)														
1.4,1.4 i	*1H1/0/2/3/B, 1H5/0/2/B*	E		1390	AEX, APQ	M			07/95 ▸ 05/98	032121110B	**820962**	87	Y
1.4 i	*1H5/0/2/B*	E		1390	AEX	M			05/96 ▸ 11/97	056121113D	**819868**	87	Y
1.4 i	*1H5/0/2/B*	E		1390	AEX	M		☞4	05/96 ▸ 11/97	044121113	**820168**	87	Y

• **New** Nouveau **Nuevo** Novo **Nuovo** Nieuw **Neu** Yeni Новый Nou

			CC			AC				OE	Valeo	(°)C	
VOLKSWAGEN (.../...)													
Golf III (91>97) (.../...)													
1.4,1.4 i	*1H52, 1H1/2/3*	E	1391	ABD	M		☞4	11/91 ▸ 06/95	030121113	**820132**	84	Y
1.6,1.6 i	*1H1/0/2/3/5/B/E, 1H5/0/2 3/5/B*	E	1598	AFT, AEK, AKS	M			11/91 ▸ 02/99	056121113D	**819868**	87	Y
1.6,1.6 i	*1H1/0/2/3/5/B/E, 1H5/0/2 3/5/B*	E	1598	AEK, AFT, AEA, AKS	M		☞4	11/91 ▸ 02/99	044121113	**820168**	87	Y
1.6	*1H1/2/3*	E	1598	ABU	M		☞4	09/92 ▸ 09/94	030121113	**820132**	84	Y
1.6	*1H1/0/2/3*	E	1598	AEE	M			07/95 ▸ 12/97	032121110B	**820962**	87	Y
1.6 i	*1H1/0/2/3/B, 1H5/0/2/3/B*	E	1598	AFT, AEK	A			10/94 ▸ 02/99	056121113D	**819868**	87	Y
1.6 i	*1H1/0/2/3/B, 1H5/0/2/3/B*	E	1598	AFT, AEK	A		☞4	10/94 ▸ 02/99	044121113	**820168**	87	Y
1.8,1.8 i	*1H1/0/2/3/5, 1H5/0/2/3/5*	E	1781	AAM, ADZ, ABS, ACC	M			11/91 ▸ 04/99	056121113D	**819868**	87	Y
1.8,1.8 i	*1H1/0/2/3/5, 1H5/0/2/3/5*	E	1781	ADZ, ABS, AAM, ANN, ACC, ANP	M		☞4	11/91 ▸ 04/99	044121113	**820168**	87	Y
1.8,1.8 i	*1H1/0/2/3, 1H5/0/2/3*	E	1781	AAM, ABS, ADZ, ANN, ANP	A		☞4	11/91 ▸ 02/99	044121113	**820168**	87	Y
1.8,1.8 i	*1H1/0/2/3, 1H5/0/2/3*	E	1781	AAM, ADZ, ABS	A			11/91 ▸ 02/99	056121113D	**819868**	87	Y
2.0 E,2.0 i	*1H33, 1H1/0/2/3/5/6, 1H5 0/2/3/5*	E	1984	AKR, AGG, 2E, ADY, AEP	M			11/91 ▸ 04/99	056121113D	**819868**	87	Y
2.0 E,2.0 i	*1H33, 1H1/0/2/3/5/6, 1H5 0/2/3/5*	E	1984	ADY, 2E, AGG, AKR, AEP	M		☞4	11/91 ▸ 04/99	044121113	**820168**	87	Y
2.0 16V	*1H16*	E	1984	ABF	M		☞4	03/92 ▸ 12/97	037121113	**820245**	82	Y
2.0 E,2.0 i	*1H1/0/2/3, 1H5/0/2/3*	E	1984	AGG, 2E, ADY, AEP	A			11/91 ▸ 02/99	056121113D	**819868**	87	Y
2.0 E,2.0 i	*1H1/0/2/3, 1H5/0/2/3*	E	1984	ADY, 2E, AGG, AEP	A		☞4	11/91 ▸ 02/99	044121113	**820168**	87	Y
2.8 VR6	*1H16*	E	2792	AAA	A			07/92 ▸ 12/97	075121113D	**820065**	87	Y
2.8 VR6	*1H16*	E	2792	AAA	M			01/92 ▸ 12/97	075121113D	**820065**	87	Y
2.9 i VR6	*1H56, 1H13, 1H16*	E	2861	ABV	M			01/94 ▸ 04/99	075121113D	**820065**	87	Y
1.9 D,1.9 D Ecomatic 1.9 SDi,1.9 SDi Ecomatic 1.9 TD,1.9 TDi	*1H1/0/2/3/5, 1H5/0/2/3/5*	D	1896	1Y, AFN, AEY, AAZ, 1Z, ALE AHU	M		☞4	11/91 ▸ 02/99	044121113	**820168**	87	Y
1.9 TD,1.9 TDi	*1H1/2/3, 1H5/0/2/3/B*	D	1896	1Z, AFN, AHU, AAZ	A		☞4	11/91 ▸ 02/99	044121113	**820168**	87	Y
Golf III Cabriolet (98>2002)													
1.6 i	*1E7/4/6/F*	E	1598	AFT, AKS	M			03/98 ▸	056121113D	**819868**	87	Y
1.6 i	*1E7/1/2/3/4/6/F*	E	1598	AKS, AFT	M		☞4	03/98 ▸	044121113	**820168**	87	Y
1.6 i	*1E7/4/6/F*	E	1598	AFT	A			03/98 ▸	056121113D	**819868**	87	Y
1.6 i	*1E7/1/2/3/4/6/F*	E	1598	AFT	A		☞4	03/98 ▸	044121113	**820168**	87	Y
1.8 i	*1E7/4/6*	E	1781	AAM, ADZ, ANN, ANP	M			03/98 ▸	056121113D	**819868**	87	Y
1.8 i	*1E7/1/2/3/4/6*	E	1781	ANN, AAM, ADZ, ANP	M		☞4	03/98 ▸	044121113	**820168**	87	Y
1.8 i	*1E7/1/2/3/4/6*	E	1781	ANP, ADZ	A		☞4	03/98 ▸	044121113	**820168**	87	Y
1.8 i	*1E7/4/6*	E	1781	ANP, ADZ	A			03/98 ▸	056121113D	**819868**	87	Y
2.0 i	*1E7/4/6*	E	1984	AGG, AKR	M			03/98 ▸	056121113D	**819868**	87	Y
2.0 i	*1V73, 1E7/1/2/3/4/6*	E	1984	AGG, ATU, AWG, AKR	M		☞4	03/98 ▸	044121113	**820168**	87	Y
2.0 i	*1E7/4/6*	E	1984	AGG	A			03/98 ▸	056121113D	**819868**	87	Y
2.0 i	*1V73, 1E7/1/2/3/4/6*	E	1984	AWF, ATU, AGG, AWG	A		☞4	03/98 ▸	044121113	**820168**	87	Y
1.9 TDi	*1E7/1/2/3/4/6*	D	1896	AFN, AHU, ALE, AVG	M		☞4	03/98 ▸	044121113	**820168**	87	Y
Golf IV (97>2003)													
2.0 i	*1J1/0/1/2/3, 1J5/0/1/2/3*	F	1984	BEH	M			05/02 ▸	050121113C	**820171**	87	Y
1.4 i 16V	*1J1/0/1/2*	E	1390	AXP	M		☞4	05/00 ▸ 10/01	044121113	**820168**	87	Y
1.4 i 16V	*1J52*	E	1390	AHW	M			05/00 ▸	050121113C	**820171**	87	Y
1.4 i 16V	*1J1/0/1/2, 1J5/0/1/2/3*	E	1390	APE, AKQ, AHW, BCA, AXP	M			10/97 ▸	032121110B	**820962**	87	Y
1.4 i 16V	*1J12*	E	1390	AHW	A			10/97 ▸	032121110B	**820962**	87	Y
1.6 i	*1J12*	E	1595	AEH	M		☞4	05/00 ▸ 06/02	044121113	**820168**	87	Y
1.6 i	*1J1/0/1/2/3/5, 1J5/0/1/2/3/5*	E	1595	APF, AKL, AEH, BFQ, AVU	M			10/97 ▸	050121113C	**820171**	87	Y
1.6 i 16V	*1J1/0/1/2/3/5, 1J5/0/1/2 3/5*	E	1595	AZD, AUS, ATN, BCB	M			11/99 ▸	032121110B	**820962**	87	Y
1.6 i	*1J1/0/1/2/3/5, 1J5/0/1/2/3/5*	E	1595	AVU, AEH, AKL, APF, BFQ	A			10/97 ▸	050121113C	**820171**	87	Y
1.8 i,1.8 i 20V 1.8 i Turbo 1.8 i Turbo 20V	*1J1/0/1/2/3/5/6, 1J5/0/1 2/3/5*	E	1781	AGU, ARZ, AGN, AUM, AUQ	M			10/97 ▸	050121113C	**820171**	87	Y
1.8 i 20V,1.8 i Turbo 20V	*1J1/2/3/5/6, 1J5/2/3*	E	1781	AGN, AGU, AUM	A			10/97 ▸	050121113C	**820171**	87	Y
2.0 i	*1J1/0/1/2/3/5/6, 1J5/0/1/2/3/5*	E	1984	AQY, AZJ, APK, AZG, AZH	M			08/98 ▸	050121113C	**820171**	87	Y
2.0 i	*1J25, 1J1/0/1/2/3/5, 1J5/0/1/2/3/5*	E	1984	AQY, APK, AZJ	A			08/98 ▸	050121113C	**820171**	87	Y
2.3 i VR5 20V	*1J53, 1J1/3/6*	E	2324	AQN	M			01/03 ▸	022121113	**820958**	80	Y
2.3 i VR5 20V	*1J13, 1J53*	E	2324	AQN	A			01/03 ▸	022121113	**820958**	80	Y
2.3 i VR5 20V ▸ 1J-X-800 000	*1J1/0/1/2/3/5/6, 1J5/3/5*	E	2324	AGZ	M		☞4	10/97 ▸	044121113	**820168**	87	Y

• **New** Nouveau **Nuevo** Novo **Nuovo** Nieuw **Neu** Yeni Новый Nou

Type Ctr.		cc		AC		2 3	OE	Valeo	(°)C	
VOLKSWAGEN (.../...)										
Golf IV (97>2003) (.../...)										
2.3 i VR5 20V ▸ 1J-X-800 000	*1J1/0/1/2/3/5, 1J5/3/5*	E	2324	AGZ	A	☞4	10/97 ▸	044121113	**820168**	87	Y
2.3 i VR5 20V	*1J53, 1J13, 1J11, 1J12 1J55, 1J10, 1J15*	E	2324	AGZ,AQN	A		09/00 ▸ 05/06	075121113D	**820065**	87	Y
2.3 i VR5 20V 1J-Y-000 001 ▸	*1J16, 1J13, 1J53, 1J15 1J10, 1J12, 1J55, 1J11*	E	2324	AGZ,AQN	M		11/00 ▸ 06/05	075121113D	**820065**	87	Y
2.8 i V6 24V 2.8 i VR6 24V	*1J55, 1J15, 1J56, 1J16 1J13, 1J53*	E	2792	AQP,AUE,BDE	M		05/99 ▸ 12/02	075121113D	**820065**	87	Y
2.8 i V6 24V	*1J53*	E	2792	BDE	M		01/03 ▸	022121113	**820958**	80	Y
3.2 i V6	*1J1R*	E	3189	BFH	M		06/02 ▸	022121113	**820958**	80	Y
3.2 i V6	*1J1R*	E	3189	BFH	A		06/02 ▸	022121113	**820958**	80	Y
3.2 i V6	*1J1R*	E	3189	BFH	A		06/02 ▸ 05/04	075121113A	**820065**	87	Y
3.2 i V6	*1J1R*	E	3189	BFH	M		06/02 ▸ 05/04	075121113A	**820065**	87	Y
1.9 SDi,1.9 TDi	*1J1/0/1/2/3/5/6, 1J5/0/1 2/3/5*	D	1896	ATD, AGP, AHF, ALH, ARL, AUY AGR, ASV, ASZ, AJM, AQM, AXR	M	☞4	10/97 ▸	044121113	**820168**	87	Y
1.9 TDi	*1J1/0/1/2/3/5, 1J5/0/1/2 3/5*	D	1896	ASZ, AHF, AGR, AUY, ALH, ATD	A	☞4	10/97 ▸	044121113	**820168**	87	Y
Golf V (2003>)										
1.4 i 16V	*1K1/0/1/2*	E	1390	BUD, BCA	M		10/03 ▸	032121110B	**820962**	87	Y
1.6 i	*1K1/0/1/2/B, 1K5/0/1*	E	1595	BSF, BSE, BGU	M		01/04 ▸	050121113C	**820171**	87	Y
1.6 i	*1K1/0/1/2/B, 1K5/0/1*	E	1595	BSF, BSE, BGU	A		01/04 ▸	050121113C	**820171**	87	Y
2.0 FSi 16V	*1K11, 1K1B, 1K12*	E	1984	AXW,BLR,BLX,BLY	A		10/03 ▸ 11/05	06F121111	**820576**	105	Y
2.0 FSi 16V	*1K12, 1K11, 1K1B*	E	1984	AXW,BLR,BLX,BLY	M		10/03 ▸ 11/05	06F121111	**820576**	105	Y
3.2 i VR6 24V	*1K14*	E	3189	BUB	M		11/05 ▸	022121113	**820958**	80	Y
3.2 i VR6 24V	*1K14*	E	3189	BUB	A		08/05 ▸	022121113	**820958**	80	Y
1.9 TDi	*1K1/0/1/2/B, 1K5/0/1/2*	D	1896	BXE, BKC, BXF, BRU, BJB, BLS	M	☞4	10/03 ▸	044121113	**820168**	87	Y
1.9 TDi	*1K1/0/1/2/B, 1K5/0/1/2*	D	1896	BKC, BXE, BLS	A	☞4	10/03 ▸	044121113	**820168**	87	Y
2.0 TDi 16V	*1K1/0/1/2/3/B, 1K5/1/2*	D	1968	BKD, BMN, AZV	M		10/03 ▸	03G121113	**820058**	88	Y
2.0 SDi,2.0 TDi 2.0 TDi 16V	*1K1/0/1/2/B, 1K5/1/2*	D	1968	BDK, BMM, BVB	M	☞4	01/04 ▸	044121113	**820168**	87	Y
2.0 TDi 16V	*1K1/0/1/2/3/B*	D	1968	BMN, BKD, AZV	A		10/03 ▸	03G121113	**820058**	88	Y
2.0 TDi	*1K1/B, 1K5/1/2*	D	1968	BMM	A	☞4	05/06 ▸	03G121113A	**820168**	87	Y
Golf V Plus (2005>)										
1.4 i 16V	*5M1/0/1*	E	1390	BCA, BUD	M		01/05 ▸	032121110B	**820962**	87	Y
1.6 i	*5M1/0/1/2/C*	E	1595	BSE, BSF	M		05/05 ▸	050121113C	**820171**	87	Y
1.6 i	*5M1/0/1/2*	E	1595	BSE, BSF	A		05/05 ▸	050121113C	**820171**	87	Y
2.0 FSi 16V	*5M11, 5M12*	E	1984	BLR,BLY	A		01/05 ▸ 11/05	06F121111	**820576**	105	Y
2.0 FSi 16V	*5M12, 5M11*	E	1984	BLR,BLY	M		01/05 ▸ 11/05	06F121111	**820576**	105	Y
1.9 TDi	*5M1/0/1/2/C*	D	1896	BLS, BKC, BRU, BXF, BXE	M	☞4	01/05 ▸	044121113	**820168**	87	Y
1.9 TDi	*5M1/0/1/2/C*	D	1896	BLS, BKC, BXE	A	☞4	01/05 ▸	044121113	**820168**	87	Y
2.0 TDi 16V	*5M1/0/1/2*	D	1968	BKD, AZV, BEE	M		01/05 ▸	03G121113	**820058**	88	Y
2.0 TDi,2.0 TDi 16V	*5M1/0/1/2/C*	D	1968	BVB, BMM	M	☞4	12/05 ▸	03G121113A	**820168**	87	Y
2.0 TDi 16V	*5M1/0/1/2*	D	1968	AZV, BKD	A		01/05 ▸	03G121113	**820058**	88	Y
2.0 TDi	*5M1/0/1/2/C*	D	1968	BMM	A	☞4	02/06 ▸	03G121113A	**820168**	87	Y
Golf VI (2008>)										
1.6 i	*5K13, 5K14, 5K12*	F	1595	CHGA	M		03/09 ▸	050121113C	**820171**	87	Y
1.4 i 16V	*AJ52, 5K14, 5K13, 5K12*	E	1390	BUD,CGGA	M		10/08 ▸	032121110B	**820962**	87	Y
1.6 i	*5K12, 5K14, 5K13*	E	1595	BSE,BSF	A		10/08 ▸	050121113C	**820171**	87	Y
1.6 i,1.6 i 16V	*5K14, 5K12, AJ53, 5K13 AJ52, AJ54*	E	1595	BSE,BSF,CCSA	M		10/08 ▸	050121113C	**820171**	87	Y
2.0 TDI 16V	*5K14, 5K13, AJ53, AJ54 5K12, 5K18, AJ52*	D	1968	CBAB/F,CBBB/F,CBDB/F,CBDC/F	A		10/08 ▸	03G121113	**820058**	88	Y
2.0 TDI 16V **820058**	*5K14, 5K12, 5K13, 5K18* 88 *AJ52, AJ53, AJ54*	D Y	1968	CBAA/F,CBAB/F,CBBB/F,CBDA/F,CBDB/F,CBDC/F	M		10/08	▸	03G121113		
Golf VI Plus (2009>)										
1.6 i	*5214, 5212, 5213*	F	1595	CHGA	M		05/09 ▸	050121113C	**820171**	87	Y
1.4 i 16V	*5213, 5212*	E	1390	CGGA	M		01/09 ▸	032121110B	**820962**	87	Y
1.6 i	*5212, 5214, 5213*	E	1595	BSE,BSF	A		01/09 ▸	050121113C	**820171**	87	Y
1.6 i	*5212, 5213, 5214*	E	1595	BSE,BSF,CCSA	M		01/09 ▸	050121113C	**820171**	87	Y
2.0 TDI 16V	*5214, 5213, 5212*	D	1968	CBDB/F,CBDC/F	A		01/09 ▸	03G121113	**820058**	88	Y

• **New** Nouveau **Nuevo** Novo **Nuovo** Nieuw **Neu** Yeni Новый Nou

VOLKSWAGEN (.../...)

Golf VI Plus (2009>) (.../...)

2.0 TDI 16V	*5214, 5212, 5213*	D	1968	CBDB/F,CBDC/F	M			01/09 ▸	03G121113	**820058**	88	Y

Iltis

1.7		E	1679	WL, YX	M		☞4	01/79 ▸ 07/88	044121113	**820168**	87	Y
1.7		E	1679	YX, WL	M			01/79 ▸ 07/88	056121113D	**819868**	87	Y

Jetta I (78>83)

1.1	*161/0/2, 162/1/2*	E	1093	GG	M		☞10	08/80 ▸ 02/84	036121113B	**819854**	92	Y
1.1	*1622*	E	1093	GG	M		☞4	08/83 ▸ 07/84	044121113	**820168**	87	Y
1.1	*1622*	E	1093	GG	M			08/83 ▸ 07/84	056121113D	**819868**	87	Y
1.3	*1630, 161/0/2*	E	1272	GF, GS	M		☞10	08/79 ▸ 02/84	036121113B	**819854**	92	Y
1.3	*1610*	E	1272	GF	M		☞4	08/83 ▸ 07/84	044121113	**820168**	87	Y
1.3	*1610*	E	1272	GF	M			08/83 ▸ 07/84	056121113D	**819868**	87	Y
1.5	*1632, 161/0/1/2*	E	1457	JB, GH	M		☞4	08/78 ▸ 07/84	044121113	**820168**	87	Y
1.5	*1611*	E	1457	JB	M			08/83 ▸ 07/84	056121113D	**819868**	87	Y
1.5	*1632, 161/0/1/2*	E	1457	GH, JB	A		☞4	08/78 ▸ 07/83	044121113	**820168**	87	Y
1.6	*1620, 1641, 161/0/1/2*	E	1588	EG, FR, EM, EJ	M		☞4	08/78 ▸ 07/84	044121113	**820168**	87	Y
1.6	*1611*	E	1588	EG	M			08/78 ▸ 07/80	056121113A	**819867**	80	Y
1.6	*1612*	E	1588	FR	M			08/83 ▸ 07/84	056121113D	**819868**	87	Y
1.6	*1620, 1641, 161/0*	E	1588	EM, FR	A		☞4	08/79 ▸ 07/83	044121113	**820168**	87	Y
1.7	*1610*	E	1716	EN	M		☞4	08/80 ▸ 07/84	044121113	**820168**	87	Y
1.7	*1610*	E	1716	EN	A		☞4	08/80 ▸ 07/81	044121113	**820168**	87	Y
1.8	*1612, 1632*	E	1781	JJ, DX	M		☞4	08/82 ▸ 02/84	044121113	**820168**	87	Y
1.6 D	*1611*	D	1588	CR	M			08/80 ▸ 07/82	056121113A	**819867**	80	Y
1.6 D,1.6 TD	*1620, 161/0/1*	D	1588	JK, CY, CR	M		☞4	08/80 ▸ 07/84	044121113	**820168**	87	Y
1.6 D	*161/0/1*	D	1588	JK, CR	A		☞4	08/81 ▸ 07/83	044121113	**820168**	87	Y
1.6 D	*1611*	D	1588	CR	A			08/81 ▸ 07/82	056121113A	**819867**	80	Y

Jetta II (83>92)

1.05	*1G22, 167/0/1*	E	1043	HZ	M		☞4	08/86 ▸ 10/91	030121113	**820132**	84	Y
1.3	*165/0/1/2, 167/0/1/2/3, 168/0/1*	E	1272	MH, HK, GT	M		☞10	08/83 ▸ 07/87	036121113B	**819854**	92	Y
1.3	*1670, 1G23*	E	1272	MH	M		☞4	08/85 ▸ 07/90	044121113	**820168**	87	Y
1.3	*1670, 1G23*	E	1272	MH	M			08/85 ▸ 07/90	056121113D	**819868**	87	Y
1.3,1.3 i	*165/0/1/2/G/H/J, 1681 167/0/1/2/G/H/J, 1G2/2/3*	E	1272	MH, NZ, NU, 2C	M		☞4	08/86 ▸ 07/92	030121113	**820132**	84	Y
1.6	*165/0/1/2/G/H/J, 167/0/1/2/G/H/J 168/0/1/2, 1G2/2/3*	E	1595	PN, HM, RF, EZ	M		☞4	08/83 ▸ 11/92	044121113	**820168**	87	Y
1.6	*167/0/1*	E	1595	EZ	M			08/83 ▸ 07/88	056121113D	**819868**	87	Y
1.6	*165/0/1/2, 167/0/1/2, 168/0/1/2 1G2/2/3*	E	1595	HM, EZ, RF, PN	A		☞4	08/83 ▸ 11/92	044121113	**820168**	87	Y
1.6	*167/0/1*	E	1595	EZ	A			08/85 ▸ 07/88	056121113D	**819868**	87	Y
1.8,1.8 i,1.8 i 16V	*165/0/1/2/3/G/H/J/N/S/T 167/0/1/2/3/7/G/H/J/K/N S/T/U/V/Z, 168/0/2/3/7/U V/Z, 1G2/1/2/3/5*	E	1781	RV, GU, RP, EV, PF, HV, GZ PB, PL, GX, RD, RH, GU-K, KR 1P	M		☞4	01/84 ▸ 10/91	044121113	**820168**	87	Y
1.8,1.8 i	*167/0/T/U/V/Z, 168/U/V/Z 1G2/2/5*	E	1781	GX, GU, GU-K, PB, 1P, PF	M			01/87 ▸ 10/91	056121113D	**819868**	87	Y
1.8,1.8 i	*165/0/1/2/G/H/J, 167/0/1 2/7/G/H/J/K, 168/0/2/7 1G2/1/2/3*	E	1781	GX, GU, RV, HV, RP, RH, PF	A		☞4	01/84 ▸ 10/91	044121113	**820168**	87	Y
1.6 D,1.6 TD	*1G2/2/3/5*	D	1588	SB, 1V	M		☞4	08/89 ▸ 11/92	044121113	**820168**	87	Y

Jetta (2005>)

1.6 i	*1K2/0/1/2*	E	1595	BSF, BSE	M			08/05 ▸	050121113C	**820171**	87	Y
1.6 i	*1K2/0/1/2*	E	1595	BSE, BSF	A			10/05 ▸	050121113C	**820171**	87	Y
2.0 FSi 16V	*1K22, 1K21*	E	1984	BLR,BLY	A			10/05 ▸ 11/05	06F121111	**820576**	105	Y
2.0 FSi 16V	*1K21, 1K22*	E	1984	BLR,BLY	M			08/05 ▸ 11/05	06F121111	**820576**	105	Y
1.9 TDI	*1K2/0/1/2*	D	1896	BLS, BKC	M		☞4	08/05 ▸	044121113	**820168**	87	Y
1.9 TDI	*1K2/0/1/2*	D	1896	BLS, BKC	A		☞4	09/05 ▸	044121113	**820168**	87	Y
2.0 TDi 16V	*1K2/0/1/2*	D	1968	BKD, AZV	M			08/05 ▸	03G121113	**820058**	88	Y
2.0 TDi	*1K2/0/1/2*	D	1968	BMM	M		☞4	10/05 ▸	03G121113A	**820168**	87	Y
2.0 TDi 16V	*1K2/0/1/2*	D	1968	AZV, BKD	A			09/05 ▸	03G121113	**820058**	88	Y

• **New** Nouveau **Nuevo** Novo **Nuovo** Nieuw **Neu** Yeni Новый Nou

Type Ctr.		cc		AC		2 3	OE	Valeo	(°)C	
VOLKSWAGEN (.../...)										
Jetta (2005>) (.../...)										
2.0 TDi *1K2/0/1/2*	D	1968	BMM	A	☞4	10/05 ▸	03G121113A	**820168**	87	Y
K70										
1.6 *4810, 4820*	E	1600	DA, DB	M		08/70 ▸ 02/75	056121113A	**819867**	80	Y
1.8 *4810, 4820*	E	1800	DC	M		06/73 ▸ 02/75	056121113A	**819867**	80	Y
Lupo										
1.0 i *6X10*	E	999	ANV, ALL, ALD, AUC, AHT, AER	M		10/98 ▸	032121110B	**820962**	87	Y
1.4 i,1.4 i 16V *6X10*	E	1390	AHW, AFK, AUD, AQQ, BBY, AUA APE, AUB, AKQ	M		10/98 ▸	032121110B	**820962**	87	Y
1.4 i 16V *6X10*	E	1390	AHW, APE, BBY, AUA, AKQ	A		10/98 ▸	032121110B	**820962**	87	Y
1.2 TDi *6E10*	D	1191	AYZ, ANY	M	☞4	05/99 ▸ 05/03	044121113	**820168**	87	Y
1.4 TDi *6X10*	D	1422	AMF	M	☞4	05/99 ▸	044121113	**820168**	87	Y
1.7 SDi *6X10*	D	1716	AKU	M	☞4	10/98 ▸	044121113	**820168**	87	Y
New Beetle (98>2001)										
1.6 i *9C13*	E	1595	AWH, AYD	M		11/99 ▸	050121113C	**820171**	87	Y
1.6 i *9C13*	E	1595	AYD	A		06/00 ▸ 05/01	050121113C	**820171**	87	Y
1.8 i Turbo 20V *9C13, 1C1/5/7/8*	E	1781	AWU, AVC, APH, AWV	M		07/99 ▸	050121113C	**820171**	87	Y
1.8 i Turbo 20V *1C1/5/7/8*	E	1781	AWV, APH	A		01/99 ▸	050121113C	**820171**	87	Y
2.0 i *9C13, 1C1/3/8*	E	1984	AQY, AEG	M		01/98 ▸	050121113C	**820171**	87	Y
2.0 i *9C13, 1C1/3/5/8*	E	1984	AQY, APK, AEG	A		01/98 ▸	050121113C	**820171**	87	Y
2.3 i V5 20V *9C13*	E	2324	AQN	M		10/00 ▸ 05/01	075121113D	**820065**	87	Y
1.9 TDi *9C13, 1C1/3/5/8*	D	1896	ATD, ALH	M	☞4	11/98 ▸	044121113	**820168**	87	Y
1.9 TDi *9C13, 1C1/3/5/8*	D	1896	ALH	A	☞4	11/98 ▸	044121113	**820168**	87	Y
New Beetle (2001>2005)										
1.4 i 16V *1C13, 1Y73*	E	1390	BCA	M		08/01 ▸	032121110B	**820962**	87	Y
1.6 i *1Y73, 9C13, 1C1/3*	E	1595	BFS, AYD	M		06/01 ▸	050121113C	**820171**	87	Y
1.6 i *1C13, 9C13*	E	1595	BFS, AYD	A		06/01 ▸	050121113C	**820171**	87	Y
1.8 i Turbo 20V *1Y73, 9C13, 1C1/3/6/7/8/S*	E	1781	AWV, AWU, AWP	M		06/01 ▸	050121113C	**820171**	87	Y
1.8 i Turbo 20V *9C13, 1C1/3/5/8/S*	E	1781	AWU, BKF, AWV	A		06/01 ▸	050121113C	**820171**	87	Y
2.0 i *1C1/3/5/8, 9C13, 1Y7/3/5*	E	1984	AQY, BEJ, APK, AZJ, BEV, BER AEG	M		06/01 ▸	050121113C	**820171**	87	Y
2.0 i *1C1/3/5/8, 9C13, 1Y7/3/5*	E	1984	AEG, BEV, BEJ, AZJ, BER, AQY APK	A		06/01 ▸	050121113C	**820171**	87	Y
1.9 TDi *1Y73, 9C13, 1C1/3*	D	1896	ALH, AXR, ATD	M	☞4	06/01 ▸	044121113	**820168**	87	Y
1.9 TDi *1C13, 9C13*	D	1896	ALH	A	☞4	06/01 ▸	044121113	**820168**	87	Y
New Beetle (2005>)										
1.4 i 16V *1C13, 1Y73*	E	1390	BCA	M		07/05 ▸	032121110B	**820962**	87	Y
1.6 i *1C13, 1Y73*	E	1595	BFS	M		07/05 ▸	050121113C	**820171**	87	Y
1.6 i *1C13*	E	1595	BFS	A		07/05 ▸	050121113C	**820171**	87	Y
1.8 i Turbo 20V *1C13, 1Y73*	E	1781	AWU	M		07/05 ▸	050121113C	**820171**	87	Y
1.8 i Turbo 20V *1C13*	E	1781	AWU	A		07/05 ▸	050121113C	**820171**	87	Y
2.0 i *1Y73, 1C1/3/5*	E	1984	BER, BHP, AZJ	M		07/05 ▸	050121113C	**820171**	87	Y
2.0 i *1Y73, 1C1/3/5*	E	1984	AZJ, BER, BHP	A		07/05 ▸	050121113C	**820171**	87	Y
1.9 TDi *1Y73, 1C1/3/4/5*	D	1896	BSW	M	☞4	07/05 ▸	044121113	**820168**	87	Y
1.9 TDi *1C1/4/5*	D	1896	BEW	A	☞4	07/05 ▸	044121113	**820168**	87	Y
Passat (73>82)										
1.3 *321/2, 3320, 331/0/1/2*	E	1272	FZ, FY	M	☞10	01/78 ▸ 07/81	036121113B	**819854**	92	Y
1.3 *321/2, 3320, 331/0/1/2* 3282300001 ▸	E	1272	FY, FZ	M	☞4	08/78 ▸ 07/81	044121113	**820168**	87	Y
1.3 *3220, 321/0/1/2, 3240, 323/0/1* ▸3282300000 *3320, 331/0/1/2*	E	1272	ZF, ZA, FZ, FY	M		05/73 ▸ 07/78	056121113A	**819867**	80	Y
1.5 *321/0/1/2* ▸3282300000	E	1471	ZB, YJ, ZC	M		05/73 ▸ 12/75	056121113A	**819867**	80	Y
1.5 *321/0/1* ▸3282300000	E	1471	YJ, ZC, ZB	A		05/73 ▸ 12/75	056121113A	**819867**	80	Y
1.6 *321/0/1/2/5, 322/0/1/5, 323/0/1/2/5* 3282300001 ▸ *7, 324/0/1/2/5, 331/0/1/2/5, 332/0 5*	E	1588	YN, FS, WY, YP, WP, YY, WZ YS, YG	M	☞4	08/78 ▸ 07/82	044121113	**820168**	87	Y
1.6 *3215*	E	1588	WY, WP	M		08/81 ▸ 07/82	056121113D	**819868**	87	Y

• **New** Nouveau **Nuevo** Novo **Nuovo** Nieuw **Neu** Yeni Новый Nou

VOLKSWAGEN (.../...)

Passat (73>82) (.../...)

1.6 ▸ 3282300001	*3221, 321/5, 323/0/7*	E	1588	YG, YH, YN, YP, WY	A		☞4	08/78 ▸ 07/81	044121113	**820168**	87	Y
1.6 ▸ 3282300000	*321/0/1, 322/0/1, 323/0/1, 324/0/1 2, 331/0/1/2*	E	1588	YP, YG, FS, YN, YH	M			09/75 ▸ 07/78	056121113A	**819867**	80	Y
1.6 ▸ 3282300000	*3221, 321/0/1/5, 3241, 3311, 3321 323/0/1*	E	1588	YG, YP, FS, YN, YH	A			09/75 ▸ 07/78	056121113A	**819867**	80	Y
1.9 ▸ 3282300001	*3236*	E	1921	WN	M		☞4	01/81 ▸ 07/81	044121113	**820168**	87	Y
1.9	*3236*	E	1921	WN	M		☞4	01/81 ▸ 07/81	069121113	**820063**	87	Y
1.9	*3236*	E	1921	WN	A		☞4	01/81 ▸ 07/81	069121113	**820063**	87	Y
1.9 ▸ 3282300001	*3236*	E	1921	WN	A		☞4	01/81 ▸ 07/81	044121113	**820168**	87	Y
2.2	*3216*	E	2144	WE	M		☞4	01/81 ▸ 07/81	069121113	**820063**	87	Y
2.2 ▸ 3282300001	*321/5/6*	E	2144	WE	M		☞4	01/81 ▸ 07/81	044121113	**820168**	87	Y
2.2 ▸ 3282300001	*3216*	E	2144	WE	A		☞4	01/81 ▸ 07/81	044121113	**820168**	87	Y
2.2	*3216*	E	2144	WE	A		☞4	01/81 ▸ 07/81	069121113	**820063**	87	Y
1.5 D ▸ 3282300001	*3311*	D	1471	CK	M		☞4	08/78 ▸ 07/80	044121113	**820168**	87	Y
1.5 D ▸ 3282300000	*3311*	D	1471	CK	M			08/77 ▸ 07/78	056121113A	**819867**	80	Y
1.6 D ▸ 3282300001	*3216*	D	1588	CR	M		☞4	08/80 ▸ 07/81	044121113	**820168**	87	Y

Passat (82>88)

1.3	*321/5/6/7, 322/5/7, 323/5/6/7, 324 5/6/7, 331/5/6/7, 332/5/6/7*	E	1272	FY, FZ	M		☞10	08/81 ▸ 07/83	036121113B	**819854**	92	Y
1.3	*321/0/1/5/6, 323/0/1/2/5/6/7/R/S 327/R/S, 331/0/1/5/6/7/R/S*	E	1297	EP, EU	M			08/83 ▸ 04/88	056121113D	**819868**	87	Y
1.3	*321/0/1/5/6, 323/0/1/2/5/6/7/R/S 327/R/S, 331/0/1/5/6/7/R/S*	E	1297	EP, EU	M		☞4	08/83 ▸ 04/88	044121113	**820168**	87	Y
1.3,1.3 i	*323/6, 331/6/7*	E	1297	EU	A		☞4	08/83 ▸ 07/84	044121113	**820168**	87	Y
1.3,1.3 i	*323/6, 331/6/7*	E	1297	EU	A			08/83 ▸ 07/84	056121113D	**819868**	87	Y
1.6	*321/5/6/7/A/B/C, 322/5/6/7, 323/5/6 7/A/B/C, 324/5/6, 331/5/6/7/A/B/C 332/5/6/7/A/B/C*	E	1588	YP, WV, WY	M			08/81 ▸ 04/88	056121113D	**819868**	87	Y
1.6	*321/5/6/7/A/B/C, 322/5/6/7, 323/5/6 7/A/B/C, 324/5/6/7/A/B/C, 331/5/6/7 A/B/C, 332/5/6/7/A/B/C*	E	1588	WV, YP, WY	M		☞4	08/81 ▸ 04/88	044121113	**820168**	87	Y
1.6	*321/5/6/7, 322/5/6/7, 3246, 323/5/6 7, 331/5/6/7, 332/5/6/7*	E	1588	WV, YP, WY	A			08/81 ▸ 07/84	056121113D	**819868**	87	Y
1.6	*321/5/6/7, 322/5/6/7, 323/5/6/7 324/5/6/7, 331/5/6/7, 332/5/6/7*	E	1588	YP, WV, WY	A		☞4	08/81 ▸ 07/84	044121113	**820168**	87	Y
1.6	*321/0/1/2, 323/0/1/2/D/J/K/L/R/S/T 324/0/R, 328R, 327/R/S/T, 331/0/1 6/7/C/D/K/L/R/S/T, 332/0/5*	E	1595	DT, JU, PP, DTA	M		☞4	08/84 ▸ 04/88	044121113	**820168**	87	Y
1.6	*321/0/1/2, 323/0/1/2/D/J/K/L/R/S/T 324/0/R, 328R, 327/R/S/T, 331/0/1 6/7/C/D/K/L/R/S/T, 332/0/5*	E	1595	DT, PP, JU, DTA	M			08/84 ▸ 04/88	056121113D	**819868**	87	Y
1.6	*321/0/1/2, 323/0/1/2/D/R/S/T, 327/R S/T, 331/0/1/D/R/S/T*	E	1595	DT	A			08/84 ▸ 04/88	056121113D	**819868**	87	Y
1.6	*321/0/1/2, 323/0/1/2/D/R/S/T, 327/R S/T, 331/0/1/D/R/S/T*	E	1595	DT	A		☞4	08/84 ▸ 04/88	044121113	**820168**	87	Y
1.8,1.8 i	*321/0/1/2/6, 323/0/1/2/D E/G/H/J/K/L/R/S/T, 324/D S, 327/7/J/K/L/R/S/T, 328 S/T, 331/0/1/D/E/G/H/J/K L/R/S/T/U/Y, 332/1/S*	E	1781	JV, JN, DS, RM	M			08/83 ▸ 07/88	056121113D	**819868**	87	Y
1.8,1.8 i	*321/0/1/2/6, 323/0/1/2/D E/G/H/J/K/L/R/S/T, 324/D S, 327/7/J/K/L/R/S/T, 328 S/T, 331/0/1/D/E/G/H/J/K L/R/S/T/U/Y, 332/1/S*	E	1781	JV, DS, RM, JN	M		☞4	08/83 ▸ 07/88	044121113	**820168**	87	Y

• **New** Nouveau **Nuevo** Novo **Nuovo** Nieuw **Neu** Yeni Новый Nou

VOLKSWAGEN (.../...)

Passat (82>88) (.../...)

1.8,1.8 i	*321/0/1/2, 324S, 323/0/1 2/D/E/G/H/J/K/L/R/S/T 327/7/J/K/L/R/S/T, 328/S T, 331/0/1/D/E/G/H/J/K/L R/S/T, 332/1/S*	E	1781	DS, JV, RM, JN	A		☞4	08/83 ▸ 04/88	044121113	**820168**	87	Y
1.8,1.8 i	*321/0/1/2, 324S, 323/0/1 2/D/E/G/H/J/K/L/R/S/T 327/7/J/K/L/R/S/T, 328/S T, 331/0/1/D/E/G/H/J/K/L R/S/T, 332/1/S*	E	1781	JV, JN, DS, RM	A			08/83 ▸ 04/88	056121113D	**819868**	87	Y
1.9	*321/5/6/7, 323/5/6/7, 324/5/6/7 331/5/6/7, 332/5/6/7*	E	1921	WN	M		☞4	08/81 ▸ 07/83	069121113	**820063**	87	Y
1.9	*321/5/6/7, 323/5/6/7, 324/5/6/7 331/5/6/7, 332/5/6/7*	E	1921	WN	A		☞4	08/81 ▸ 07/84	069121113	**820063**	87	Y
2.0 i	*323/1/2/6/7/A/D/R/T, 324/1/2/A/D/R T, 327/C/R/T, 328/C/R/T, 331/1/6/7 8/D/P/R/T/N/W, 332/A/D/R/T*	E	1994	JS, HP	M		☞4	08/83 ▸ 04/88	069121113	**820063**	87	Y
2.0 i	*323/1/2/6/7/A/D/R/T, 324/1/2/A/D/R T, 327/C/R/T, 328/C/R/T, 331/1/6/7 A/D/R/T, 332/A/D/R/T*	E	1994	JS, HP	A		☞4	08/83 ▸ 04/88	069121113	**820063**	87	Y
2.2,2.2 i	*321/5/6/7, 323/5/6/7, 331 5/6/7*	E	2144	WE	M		☞4	08/81 ▸ 07/83	069121113	**820063**	87	Y
2.2,2.2 i	*321/5/6/7, 323/5/6/7, 331 5/6/7*	E	2144	WE	A		☞4	08/81 ▸ 07/83	069121113	**820063**	87	Y
2.3,2.3 i	*324K, 323/D/E/J/K, 328K 327/F/J/K, 332K, 331/8/D E/J/K/Q/W/Z*	E	2226	HY, KX, JT, KV	M		☞4	08/84 ▸ 07/88	069121113	**820063**	87	Y
2.3 i	*324K, 323/E/J/K, 328K, 327/F/J/K 332K, 331/E/J/K*	E	2226	KX	A		☞4	08/85 ▸ 04/88	069121113	**820063**	87	Y

Passat (88>93)

1.6,1.6 i	*312/1/2/3, 315/1/2/3*	E	1595	1F, EZ, RF, ABN	M			04/88 ▸ 07/92	056121113D	**819868**	87	Y
1.6,1.6 i	*312/1/2/3, 315/1/2/3*	E	1595	EZ, RF, 1F, ABN	M		☞4	04/88 ▸ 07/92	044121113	**820168**	87	Y
1.6,1.6 i	*312/2/3, 315/2/3*	E	1595	RF, EZ, 1F	A		☞4	08/88 ▸ 07/90	044121113	**820168**	87	Y
1.6,1.6 i	*312/2/3, 315/2/3*	E	1595	EZ, 1F, RF	A			08/88 ▸ 07/90	056121113D	**819868**	87	Y
1.8,1.8 i,1.8 i 16V	*312/1/2/3/5, 315/1/2/3/5*	E	1781	ABS, AAM, PF, RP, PB, PG, KR	M			04/88 ▸ 10/93	056121113D	**819868**	87	Y
1.8,1.8 i,1.8 i 16V	*312/1/2/3/5, 315/1/2/3/5*	E	1781	KR, PG, ABS, RP, PB, PF, AAM	M		☞4	04/88 ▸ 10/93	044121113	**820168**	87	Y
1.8,1.8 i,1.8 i 16V	*312/1/2/3/5, 315/1/2/3/5*	E	1781	ABS, RP, PF, PB, KR	A		☞4	08/88 ▸ 10/93	044121113	**820168**	87	Y
1.8,1.8 i,1.8 i 16V	*312/1/2/3/5, 315/1/2/3/5*	E	1781	RP, ABS, KR, PB, PF	A			08/88 ▸ 10/93	056121113D	**819868**	87	Y
2.0,2.0 i,2.0 i 16V	*312/1/2/3/5/8, 315/1/2/3 5/8*	E	1984	2E, 9A, ACX	M		☞4	04/88 ▸ 10/93	044121113	**820168**	87	Y
2.0,2.0 i,2.0 i 16V	*312/1/2/3/5/8, 315/1/2/3 5/8*	E	1984	2E, 9A, ACX	M			04/88 ▸ 10/93	056121113D	**819868**	87	Y
2.0,2.0 i,2.0 i 16V	*312/1/2/3/5/8, 315/1/2/3 5/8*	E	1984	9A, 2E	A		☞4	08/88 ▸ 10/93	044121113	**820168**	87	Y
2.0,2.0 i,2.0 i 16V	*312/1/2/3/5/8, 315/1/2/3 5/8*	E	1984	2E, 9A	A			08/88 ▸ 10/93	056121113D	**819868**	87	Y
2.0,2.0 i	*3121, 3153*	E	1984	2E	M			10/91 ▸ 10/93	075121113D	**820065**	87	Y
2.8 i,2.8 i V6,2.8 i VR6	*3123, 3155, 3158, 3125 3153, 3128*	E	2792	AAA	A			06/91 ▸ 10/93	075121113D	**820065**	87	Y
2.8 i,2.8 i V6	*3125, 3128, 3158, 3153 3123, 3155*	E	2792	AAA	M			06/91 ▸ 10/93	075121113D	**820065**	87	Y
1.6 TD	*312/1/2/3/5, 315/1/2/3/5*	D	1588	SB	M		☞4	08/91 ▸ 10/93	044121113	**820168**	87	Y
1.9 D,1.9 TD	*312/1/2/3/8, 315/1/2/3*	D	1896	AAZ, 1Y	M		☞4	07/91 ▸ 10/93	044121113	**820168**	87	Y
1.9 TD	*312/1/2/3, 315/1/2/3*	D	1896	AAZ	A		☞4	03/91 ▸ 10/93	044121113	**820168**	87	Y

Passat (93>97)

1.6 i	*3A2/2/3/5/A, 3A5/2/3/5/C*	E	1598	AEK, AFT	M			10/94 ▸ 12/96	056121113D	**819868**	87	Y
1.6 i	*3A2/2/3/5/A, 3A5/2/3/5/C*	E	1598	AFT, AEK	M		☞4	10/94 ▸ 12/96	044121113	**820168**	87	Y
1.6 i	*3A2/2/3/5, 3A5/2/3/5*	E	1598	AEK, AFT	A		☞4	10/94 ▸ 12/96	044121113	**820168**	87	Y
1.6 i	*3A2/2/3/5, 3A5/2/3/5*	E	1598	AFT, AEK	A			10/94 ▸ 12/96	056121113D	**819868**	87	Y
1.8 i	*3A2/2/3/5, 3A5/2/3/5*	E	1781	ABS, ADZ, AAM	M			10/93 ▸ 12/96	056121113D	**819868**	87	Y
1.8 i	*3A2/2/3/5, 3A5/2/3/5*	E	1781	ADZ, ABS, AAM	M		☞4	10/93 ▸ 12/96	044121113	**820168**	87	Y
1.8 i	*3A2/2/3/5, 3A5/2/3/5*	E	1781	ABS, ADZ	A		☞4	10/93 ▸ 12/96	044121113	**820168**	87	Y

• **New** Nouveau **Nuevo** Novo **Nuovo** Nieuw **Neu** Yeni Новый Nou

Type Ctr.		CC		AC		2 3	OE	Valeo	(°)C	
VOLKSWAGEN (.../...)										
Passat (93>97) (.../...)										
1.8 i *3A2/2/3/5, 3A5/2/3/5*	E	1781	ABS, ADZ	A			10/93 ▸ 12/96	056121113D	**819868**	87	Y
2.0 i,2.0 i 16V *3A2/2/3/5, 3A5/2/3/5*	E	1984	2E, ABF, AGG, ACX, ADY, AEP	M			10/93 ▸ 05/97	056121113D	**819868**	87	Y
2.0 i,2.0 i 16V *3A2/2/3/5, 3A5/2/3/5*	E	1984	AEP, AGG, ABF, 2E, ADY, ACX	M		☞4	10/93 ▸ 05/97	044121113	**820168**	87	Y
2.0 i *3A2/2/3/5, 3A5/2/3/5*	E	1984	2E, AEP, AGG, ACX, ADY	A		☞4	10/93 ▸ 12/96	044121113	**820168**	87	Y
2.0 i *3A2/2/3/5, 3A5/2/3/5*	E	1984	ADY, 2E, AGG, ACX, AEP	A			10/93 ▸ 12/96	056121113D	**819868**	87	Y
2.8 i VR6 *3A26, 3A53, 3A56, 3A23*	E	2792	AAA	A			10/93 ▸ 12/96	075121113D	**820065**	87	Y
2.8 i VR6 *3A56, 3A23, 3A26, 3A53*	E	2792	AAA	M			10/93 ▸ 12/96	075121113D	**820065**	87	Y
2.9 i VR6 *3A56*	E	2861	ABV	M			01/94 ▸ 05/97	075121113D	**820065**	87	Y
Passat (96>2000)										
1.6 i *3B2/3/A, 3B5/3/A*	E	1595	ARM, AHL, ADP, ANA	M			10/96 ▸	050121113C	**820171**	87	Y
1.6 i *3B53, 3B2/3/A*	E	1595	AHL, ARM, ADP, ANA	A			10/96 ▸	050121113C	**820171**	87	Y
1.8 i,1.8 i 20V *3B2/3/A, 3B5/3/A* 1.8 i Turbo 20V	E	1781	ADR, APT, AEB, ARG, APU, ANB AFY	M			10/96 ▸	050121113C	**820171**	87	Y
1.8 i,1.8 i 20V *3B53, 3B2/3/A* 1.8 i Turbo 20V	E	1781	AFY, ADR, APT, APU, AEB, ARG ANB	A			10/96 ▸	050121113C	**820171**	87	Y
2.3 i VR5 20V *3B23, 3B53*	E	2324	AGZ	M		☞4	10/96 ▸	044121113	**820168**	87	Y
2.3 i VR5 20V *3B23*	E	2324	AGZ	M			10/96 ▸ 08/98	050121113C	**820171**	87	Y
2.3 i VR5 20V *3B53*	E	2324	AGZ	M		☞2	05/97 ▸ 04/98	078121113F	**820027**	87	Y
2.3 i VR5 20V *3B23, 3B53*	E	2324	AGZ	A		☞4	10/96 ▸	044121113	**820168**	87	Y
2.3 i VR5 20V *3B53*	E	2324	AGZ	A		☞2	05/97 ▸ 04/98	078121113F	**820027**	87	Y
2.8 i V6 30V *3B26*	E	2771	AQD	M			05/97 ▸	050121113C	**820171**	87	Y
2.8 i V6 30V *3B26*	E	2771	AQD	A			05/97 ▸	050121113C	**820171**	87	Y
2.8 i V6 30V *3B2/6/B, 3B5/6/B* ▸3B-X-500000	E	2771	ATX, ALG, APR, ACK, AGE, AQD	M		☞2	01/97 ▸	078121113F	**820027**	87	Y
2.8 i V6 30V *3B2/6/B, 3B5/6/B* ▸3B-X-500000	E	2771	APR, ALG, ACK, AQD, ATX, AGE	A		☞2	05/97 ▸	078121113F	**820027**	87	Y
2.8 i V6 30V *3B56, 3B26* X-500001 ▸	E	2771	AGE,APR,AQD,ATX	A			03/99 ▸ 08/00	078121113G	**820414**	92	Y
2.8 i V6 30V *3B56, 3B26* X-500001 ▸	E	2771	AGE,APR,AQD,ATX	M			03/99 ▸ 08/00	078121113G	**820414**	92	Y
1.9 TDi *3B2/3/A, 3B5/3/A*	D	1896	AFN, AHU, ATJ, AVG, AJM, AHH AVB	M		☞4	10/96 ▸	044121113	**820168**	87	Y
1.9 TDi *3B23, 3B53*	D	1896	AJM, AHU, AVG, ATJ, AHH, AFN	A		☞4	10/96 ▸	044121113	**820168**	87	Y
2.5 TDi V6 *3B26, 3B56*	D	2496	AKN, AFB	M		☞2	08/99 ▸	078121113F	**820027**	87	Y
2.5 TDi V6 *3B26, 3B56*	D	2496	AKN, AFB	A		☞2	08/98 ▸	078121113F	**820027**	87	Y
Passat (2000>)										
1.6 i *3B3/0/1/2, 3B6/0/1/2*	E	1595	ALZ	M			10/00 ▸	050121113C	**820171**	87	Y
1.8 i Turbo 20V *3B3/0/1/2/3/4, 3B6/0/1/2 3*	E	1781	AWT	M			10/00 ▸	050121113C	**820171**	87	Y
1.8 i Turbo 20V *3B64*	E	1781	AWT	M		☞4	10/00 ▸	044121113	**820168**	87	Y
1.8 i Turbo 20V *3B36, 3B64*	E	1781	AWT, AWM	A		☞2	10/00 ▸	078121113F	**820027**	87	Y
1.8 i Turbo 20V *3B3/0/1/2/3/4, 3B6/0/1/2 3/4*	E	1781	AWT, AWM	A			10/00 ▸	050121113C	**820171**	87	Y
1.8 i Turbo 20V *3B66*	E	1781	AWM	A			05/02 ▸ 05/05	078121113G	**820414**	92	Y
2.0 i,2.0 i 20V *3B63, 3B3/0/2/3*	E	1984	ALT, AZM	M		☞4	10/00 ▸	044121113	**820168**	87	Y
2.0 i,2.0 i 20V *3B3/0/1/2/3, 3B6/0/1/2/3*	E	1984	AZM, ALT	M			10/00 ▸	050121113C	**820171**	87	Y
2.0 i 20V *3B63*	E	1984	ALT	A		☞2	10/00 ▸	078121113F	**820027**	87	Y
2.0 i 20V *3B6/0/2*	E	1984	ALT	A		☞4	10/00 ▸	044121113	**820168**	87	Y
2.0 i,2.0 i 20V *3B3/0/1/2/3, 3B6/0/1/2/3*	E	1984	AZM, ALT	A			10/00 ▸	050121113C	**820171**	87	Y
2.0 i 20V *3B33*	E	1984	ALT	A			11/01 ▸ 04/02	078121113G	**820414**	92	Y
2.3 i V5 *3B3/1/2/3, 3B6/1/2/3*	E	2324	AZX	M			01/01 ▸	050121113C	**820171**	87	Y
2.3 i V5 *3B3/1/2/3, 3B6/1/2/3*	E	2324	AZX	A			01/01 ▸	050121113C	**820171**	87	Y
2.3 i V5 *3B33, 3B61, 3B32, 3B31 3B63, 3B62*	E	2324	AZX	A			01/01 ▸ 05/05	075121113D	**820065**	87	Y
2.3 i V5 *3B32, 3B31, 3B61, 3B62 3B63, 3B33*	E	2324	AZX	M			01/01 ▸ 05/05	075121113D	**820065**	87	Y
2.8 i V6 *3B3/1/3, 3B6/1/2/3*	E	2771	AMX, ATQ	M			10/00 ▸	050121113C	**820171**	87	Y
2.8 i V6 *3B3/2, 3B6/1/2/3*	E	2771	ATQ, BBG, AMX	M		☞2	10/00 ▸	078121113F	**820027**	87	Y
2.8 i V6 *3B3/1/2, 3B6/0/2*	E	2771	ATQ, AMX	M		☞4	10/00 ▸	044121113	**820168**	87	Y
2.8 i V6 *3B3/2/3, 3B6/1/2/3/4/5*	E	2771	ATQ, AMX, BBG	A		☞2	10/00 ▸	078121113F	**820027**	87	Y
2.8 i V6 *3B3/1, 3B6/3/4*	E	2771	AMX, ATQ	A			01/01 ▸	050121113C	**820171**	87	Y
2.8 i V6 *3B31*	E	2771	AMX	A		☞4	05/02 ▸	044121113	**820168**	87	Y

• **New** Nouveau **Nuevo** Novo **Nuovo** Nieuw **Neu** Yeni Новый Nou

Type Ctr.	cc		AC		2 3	OE	Valeo	(°)C	
VOLKSWAGEN (.../...)									
Passat (2000>) (.../...)									
2.8 i V6 *3B61, 3B65, 3B35, 3B34 3B33, 3B63, 3B62, 3B64 3B32, 3B31*	E	2771	AMX,ATQ,BBG	A		10/00 ▸ 05/05	078121113G	**820414**	92	Y
2.8 i V6 *3B62, 3B32, 3B63, 3B31 3B33, 3B60, 3B61*	E	2771	AMX,ATQ,BBG	M		10/00 ▸ 05/05	078121113G	**820414**	92	Y
4.0 i W8 *3B68*	E	3999	BDN	M		01/01 ▸	050121113C	**820171**	87	Y
4.0 i W8 *3B68*	E	3999	BDP	A	☞2	10/00 ▸	078121113F	**820027**	87	Y
4.0 i W8 *3B67*	E	3999	BDN	A		01/01 ▸	050121113C	**820171**	87	Y
4.0 i W8 *3B67*	E	3999	BDP	A		11/01 ▸ 05/05	078121113G	**820414**	92	Y
1.9 TDi *3B62*	D	1896	AWX	M	☞2	10/00 ▸	078121113F	**820027**	87	Y
1.9 TDi *3B3/0/1/2/3, 3B6/0/1/2/3*	D	1896	AWX, AVF, AVB	M	☞4	10/00 ▸	044121113	**820168**	87	Y
1.9 TDi *3B3/0/1/2/3, 3B6/0/1/2/3*	D	1896	AVF, AVB	A	☞4	10/00 ▸	044121113	**820168**	87	Y
2.0 TDi *3B3/0/1/2/3, 3B6/0/1/2/3*	D	1968	BGW	M	☞4	11/03 ▸	044121113	**820168**	87	Y
2.5 TDi,2.5 TDi V6 *3B6/2/3*	D	2496	BDH, AKN	M	☞4	10/00 ▸	044121113	**820168**	87	Y
2.5 TDi,2.5 TDi V6 *3B61, 3B3/1/3*	D	2496	BDH, AKN	M		10/00 ▸	050121113C	**820171**	87	Y
2.5 TDi,2.5 TDi V6 *3B3/1/2/3, 3B6/1/2/3*	D	2496	AKN, BDG, BDH	M	☞2	10/00 ▸	078121113F	**820027**	87	Y
2.5 TDi *3B61*	D	2496	BAU	A		10/00 ▸	050121113C	**820171**	87	Y
2.5 TDi,2.5 TDi V6 *3B3/1/2/3, 3B6/1/2/3*	D	2496	BAU, AKN, BDG	A	☞2	10/00 ▸	078121113F	**820027**	87	Y
2.5 TDi *3B32*	D	2496	BAU	A	☞4	01/03 ▸	044121113	**820168**	87	Y
2.5 TDi,2.5 TDi V6 *3B33, 3B32, 3B31*	D	2496	AKN,BAU	A		10/00 ▸ 05/05	078121113G	**820414**	92	Y
2.5 TDi *3B33, 3B32*	D	2496	BDH	M		01/03 ▸ 05/05	078121113G	**820414**	92	Y
Passat (2005>)									
1.6 i *3C2/0/1/2, 3C5/0/1/2*	E	1595	BSE, BSF	M		03/05 ▸	050121113C	**820171**	87	Y
2.0 FSi 16V *3C22, 3C21, 3C53, 3C52 3C50, 3C51, 3C23, 3C20*	E	1984	BLR,BLY	A		03/05 ▸ 11/05	06F121111	**820576**	105	Y
2.0 FSi 16V *3C22, 3C20, 3C50, 3C23 3C51, 3C53, 3C21, 3C52*	E	1984	BLR,BLX,BLY	M		03/05 ▸ 11/05	06F121111	**820576**	105	Y
1.9 TDi *3C2/0/1/2/3, 3C5/0/1/2/3*	D	1896	BKC, BLS	M	☞4	03/05 ▸	044121113	**820168**	87	Y
2.0 TDi *3C2/0/1/2/3, 3C5/0/1/2/3*	D	1968	BKP, BMA, BUZ, BMR, BVE	M		03/05 ▸	03G121113	**820058**	88	Y
2.0 TDi *3C2/0/1/2/3, 3C5/0/1/2/3*	D	1968	BVD, BMP	M	☞4	03/05 ▸	03G121113A	**820168**	87	Y
2.0 TDi *3C2/0/1/2/3, 3C5/0/1/2/3*	D	1968	BVE, BKP, BMR, BUZ, BMA	A		03/05 ▸	03G121113	**820058**	88	Y
2.0 TDi *3C2/0/1/2/3, 3C5/0/1/2/3*	D	1968	BMP, BVD	A	☞4	03/05 ▸	03G121113A	**820168**	87	Y
Phaeton Phase I (2002>2007)									
3.2 i VR6 24V *3D2/5/6, 3D8/5/6*	E	3189	AYT, BKL	M		05/02 ▸	022121113	**820958**	80	Y
3.2 i VR6 24V *3D2/5/6, 3D8/5/6*	E	3189	AYT, BKL, BRK	A		05/02 ▸	022121113	**820958**	80	Y
4.2 i V8 32V *3D2/5/6, 3D8/5/6*	E	4172	BGJ, BGH	A		05/03 ▸	077121113C	**820557**	82	Y
Phaeton (2007>)									
3.2 i V6 24V *3D3/5/6, 3D7/5/6*	E	3189	BKL, BRK	A		06/07 ▸	022121113	**820958**	80	Y
Polo (74>81)									
0.8 *8610*	E	800	HE	M	☞10	01/76 ▸ 07/78	036121113	**819853**	87	Y
0.9 *8610*	E	895	HA	M	☞10	04/75 ▸ 07/78	036121113	**819853**	87	Y
0.9 *8610*	E	895	HA	M	☞10	08/78 ▸ 09/81	036121113B	**819854**	92	Y
1.1	E	1093	HD, HC, HB	M	☞10	04/75 ▸ 07/78	036121113	**819853**	87	Y
1.1 *8610*	E	1093	HB	M	☞10	08/78 ▸ 07/81	036121113B	**819854**	92	Y
1.3 *8610*	E	1272	HH, HJ	M	☞10	01/77 ▸ 07/78	036121113	**819853**	87	Y
1.3 *8610*	E	1272	HJ, HH	M	☞10	08/78 ▸ 07/81	036121113B	**819854**	92	Y
Polo (81>86)									
1.05 *867/0/1/2/D, 868/0/1/2, 871/0/1 872/0/1, 873/0/1/2, 874/0/1/2*	E	1043	GL, HZ	M	☞10	10/81 ▸ 10/86	036121113B	**819854**	92	Y
1.1 *867/0/1/2/A/B/C, 8711, 8721, 868/0 1/2/A, 873/0/1/2, 874/0/1/2*	E	1093	HB	M	☞10	10/81 ▸ 07/83	036121113B	**819854**	92	Y
1.3 *867/0/1/2, 868/0/1/2, 871/0/1/3/B/D 872/0/1/3*	E	1272	HK, GT, HW, GK, HJ, HH	M	☞10	10/81 ▸ 10/86	036121113B	**819854**	92	Y
Polo (86>90)									
1.05 *801/0/1/2/5/6, 802/1/2, 803/1/2/6*	E	1043	HZ, GL, AAK	M	☞10	08/86 ▸ 10/90	036121113B	**819854**	92	Y
1.3 *801/0/1/2/5/6, 802/1/2, 803/1/2/5/6*	E	1272	NU, MH, NZ, GK, 2G, 3F, GT PY	M	☞10	08/86 ▸ 10/90	036121113B	**819854**	92	Y
1.3	E	1272	NZ	M	☞10	12/86 ▸ 10/90	036121113B	**819854**	92	Y

• **New** Nouveau **Nuevo** Novo **Nuovo** Nieuw **Neu** Yeni Новый Nou

			cc			AC			OE	Valeo	(°)C	
VOLKSWAGEN (.../...)												
Polo (2005>) (.../...)												
1.8 GTI Turbo 20V	*9N36*	E	1781	BJX, BBU	M			08/05 ▸	050121113C	**820171**	87	Y
1.4 TDi	*9N3/0/1/3/5*	D	1422	BWB, BMS, BNM, BNV	M		☞4	04/05 ▸	044121113	**820168**	87	Y
1.9 SDi,1.9 TDi	*9N3/0/1/3/5*	D	1896	BMT, BLT, ATD, AXR, ASY, ASZ	M		☞4	04/05 ▸	044121113	**820168**	87	Y
Santana												
1.3	*327/0/5*	E	1297	EP	M			08/83 ▸ 07/85	056121113D	**819868**	87	Y
1.3	*327/0/5*	E	1297	EP	M		☞4	08/83 ▸ 07/85	044121113	**820168**	87	Y
1.6	*327/6/B*	E	1588	YP, WV	M			08/81 ▸ 07/84	056121113D	**819868**	87	Y
1.6	*327/6/B*	E	1588	YP, WV	M		☞4	08/81 ▸ 07/84	044121113	**820168**	87	Y
1.6	*327/6/7*	E	1588	WV, YP	A			08/81 ▸ 07/84	056121113D	**819868**	87	Y
1.6	*327/6/7*	E	1588	WV, YP	A		☞4	08/81 ▸ 07/84	044121113	**820168**	87	Y
1.6	*327/0/1/2/5/6/7/A*	E	1595	JU, DT	M			08/83 ▸ 03/88	056121113D	**819868**	87	Y
1.6	*327/0/1/2/5/6/7/A*	E	1595	JU, DT	M		☞4	08/83 ▸ 03/88	044121113	**820168**	87	Y
1.6	*327/5/6*	E	1595	DT	A		☞4	08/84 ▸ 03/88	044121113	**820168**	87	Y
1.6	*327/5/6*	E	1595	DT	A			08/84 ▸ 03/88	056121113D	**819868**	87	Y
1.8,1.8 i	*327/5/6/7/B/C/G/H*	E	1781	DS, JN, JV	M			01/82 ▸ 03/88	056121113D	**819868**	87	Y
1.8,1.8 i	*327/5/6/7/B/C/G/H*	E	1781	DS, JV, JN	M		☞4	01/82 ▸ 03/88	044121113	**820168**	87	Y
1.8,1.8 i	*327/0/1/5/G/H*	E	1781	JN, DS	A		☞4	08/83 ▸ 03/88	044121113	**820168**	87	Y
1.8,1.8 i	*327/0/1/5/G/H*	E	1781	DS, JN	A			08/83 ▸ 03/88	056121113D	**819868**	87	Y
1.9	*3276*	E	1921	WN	M		☞4	08/81 ▸ 07/83	069121113	**820063**	87	Y
1.9	*3276*	E	1921	WN	A		☞4	08/81 ▸ 07/83	069121113	**820063**	87	Y
2.0 i	*3286, 327/6/7*	E	1994	JS, HP	M		☞4	08/83 ▸ 03/88	069121113	**820063**	87	Y
2.0 i	*327/1/6/7*	E	1994	JS, HP	A		☞4	08/83 ▸ 03/88	069121113	**820063**	87	Y
2.2 i	*3277*	E	2144	WE	M		☞4	08/81 ▸ 07/82	069121113	**820063**	87	Y
2.2 i	*327/6/7*	E	2144	WE	A		☞4	08/81 ▸ 07/83	069121113	**820063**	87	Y
Scirocco												
1.1	*531//0/2*	E	1093	FA, FJ	M		☞10	04/74 ▸ 07/78	036121113	**819853**	87	Y
1.1	*531//0/2*	E	1093	FJ, FA	M		☞4	04/74 ▸ 07/80	044121113	**820168**	87	Y
1.3	*531, 533*	E	1272	HK, GF	M		☞10	08/79 ▸ 07/84	036121113B	**819854**	92	Y
1.5	*531*	E	1457	FB	M			02/74 ▸ 04/74	056121113A	**819867**	80	Y
1.5	*531, 533*	E	1457	JB, FB, GH	M		☞4	02/74 ▸ 07/83	044121113	**820168**	87	Y
1.5	*531*	E	1457	FD	A			02/74 ▸ 09/75	056121113A	**819867**	80	Y
1.5	*531, 533*	E	1457	JB, GH, FD	A		☞4	02/74 ▸ 07/83	044121113	**820168**	87	Y
1.5	*531*	E	1471	FH, FK	A			02/74 ▸ 12/75	056121113A	**819867**	80	Y
1.5	*531*	E	1471	FK, FH	A		☞4	02/74 ▸ 12/75	044121113	**820168**	87	Y
1.6	*531, 533*	E	1588	FR, FN, EE, EG, FV, FP, EM EF, FT, EJ	M		☞4	08/75 ▸ 07/83	044121113	**820168**	87	Y
1.6	*531, 533*	E	1588	EE, FR, FT, FN, FV, EG, EC FP, EF, EM	M			08/75 ▸ 07/83	056121113A	**819867**	80	Y
1.6	*531, 533*	E	1588	FN, FP, FT, FR, EM, EF, FV	A		☞4	08/75 ▸ 07/83	044121113	**820168**	87	Y
1.6	*531, 533*	E	1588	FR, FV, EF, FN, FT, FP, EM	A			08/75 ▸ 07/83	056121113A	**819867**	80	Y
1.6	*533//1/4*	E	1595	HN, EW, EWA	M		☞4	08/83 ▸ 07/90	044121113	**820168**	87	Y
1.6	*533*	E	1595	HN, EW	A		☞4	08/83 ▸ 07/86	044121113	**820168**	87	Y
1.7	*531, 533*	E	1716	EN	M		☞4	08/80 ▸ 07/83	044121113	**820168**	87	Y
1.7	*531*	E	1716	EN	A		☞4	08/80 ▸ 07/81	044121113	**820168**	87	Y
1.8,1.8 16V	*533//1/2/4*	E	1781	EX, JJ, PL, DX, KT, JH, KR	M		☞4	08/82 ▸ 07/90	044121113	**820168**	87	Y
1.8	*5331*	E	1781	EX	A		☞4	08/83 ▸ 07/90	044121113	**820168**	87	Y
Sharan (95>2000)												
1.8 i Turbo 20V	*7M8/2/3/5/9*	E	1781	AJH	M			11/97 ▸ 02/00	050121113C	**820171**	87	Y
1.8 i Turbo 20V	*7M8/2/3/5/9*	E	1781	AJH	M		☞4	11/97 ▸ 02/00	044121113	**820168**	87	Y
1.8 i Turbo 20V	*7M8/2/3/5/9*	E	1781	AJH	A		☞4	11/97 ▸ 02/00	044121113	**820168**	87	Y
1.8 i Turbo 20V	*7M8/2/3/5/9*	E	1781	AJH	A			11/97 ▸ 02/00	050121113C	**820171**	87	Y
2.0 i	*7M8/2/3/5/9*	E	1984	ADY	M			09/95 ▸ 02/00	056121113D	**819868**	87	Y
2.0 i	*7M8/2/3/5/9*	E	1984	ADY	M		☞4	09/95 ▸ 02/00	044121113	**820168**	87	Y
2.0 i	*7M8/2/3/5/9*	E	1984	ADY	A			09/95 ▸ 02/00	056121113D	**819868**	87	Y
2.0 i	*7M8/2/3/5/9*	E	1984	ADY	A		☞4	09/95 ▸ 02/00	044121113	**820168**	87	Y
2.8 i VR6	*7M85, 7M83, 7M89*	E	2792	AAA,AMY	A			09/95 ▸ 02/00	075121113D	**820065**	87	Y
2.8 i VR6	*7M83, 7M89, 7M85*	E	2792	AAA,AMY	M			09/95 ▸ 02/00	075121113D	**820065**	87	Y
1.9 TDi	*7M8/2/3/5/9*	D	1896	AVG, AHU, 1Z, ANU, AFN	M		☞4	09/95 ▸ 02/00	044121113	**820168**	87	Y
1.9 TDi	*7M8/2/3/5/9*	D	1896	AVG, AFN	A		☞4	12/96 ▸ 02/00	044121113	**820168**	87	Y
Sharan (2000>2003)												
1.8 i Turbo 20V	*7M9/2/3/5/9*	E	1781	AWC	M			04/00 ▸	050121113C	**820171**	87	Y

• **New** Nouveau **Nuevo** Novo **Nuovo** Nieuw **Neu** Yeni Новый Nou

		Type Ctr.		cc			AC			OE	Valeo	(°)C	
VOLKSWAGEN (.../...)													
Sharan (2000>2003) (.../...)													
1.8 i Turbo 20V	*7M9/2/3/5/9*	E	1781	AWC	A			04/00 ▸	050121113C	**820171**	87	Y
2.0 i	*7M9/2/3/5/9*	E	1984	ATM	M			04/00 ▸	050121113C	**820171**	87	Y
2.0 i	*7M9/2/3/5/9*	E	1984	ATM	A			04/00 ▸	050121113C	**820171**	87	Y
2.8 i V6,2.8 i VR6	*7M93, 7M92, 7M99, 7M95*	E	2792	AYL	A			04/00 ▸	075121113D	**820065**	87	Y
2.8 i V6	*7M93, 7M99, 7M92, 7M95*	E	2792	AYL	M			04/00 ▸	075121113D	**820065**	87	Y
1.9 TDi	*7M99*	D	1896	ASZ	M			11/02 ▸ 05/03	075121113D	**820065**	87	Y
1.9 TDi	*7M9/2/3/5/9*	D	1896	ANU, AUY, ASZ	M		☞4	04/00 ▸	044121113	**820168**	87	Y
1.9 TDi	*7M9/2/3/5/9*	D	1896	AUY	A		☞4	10/00 ▸	044121113	**820168**	87	Y
Sharan (2003>)													
1.8 i Turbo 20V	*7M6/0/1/2/3/S/T*	E	1781	AWC	M			06/03 ▸	050121113C	**820171**	87	Y
1.8 i Turbo 20V	*7M6/0/1/2/3/S/T*	E	1781	AWC	A			06/03 ▸	050121113C	**820171**	87	Y
2.0 i	*7M6/0/1/2/3/S/T*	E	1984	ATM	M			06/03 ▸	050121113C	**820171**	87	Y
2.0 i	*7M6/0/1/2/3/S/T*	E	1984	ATM	A			06/03 ▸	050121113C	**820171**	87	Y
2.8 i VR6	*7M6/0/1/2/3/S/T*	E	2792	AYL	M			06/03 ▸	022121113	**820958**	80	Y
2.8 i VR6	*7M6/0/1/2/3/S/T*	E	2792	AYL	A			06/03 ▸	022121113	**820958**	80	Y
1.9 TDi	*7M6/0/1/2/3/S/T*	D	1896	BVK, AUY, ANU, BTB, ASZ	M		☞4	06/03 ▸	044121113	**820168**	87	Y
1.9 TDi	*7M6/0/1/2/3/S/T*	D	1896	AUY, BVK	A		☞4	06/03 ▸	044121113	**820168**	87	Y
2.0 TDi	*7M6/0/1/2/3/S/T*	D	1968	BRT, BVH	M		☞4	11/05 ▸	044121113	**820168**	87	Y
Tiguan													
2.0 TDi 16V	*5N1/0/1/2*	D	1968	CBA/F	M			11/07 ▸	03G121113	**820058**	88	Y
2.0 TDi 16V	*5N1/0/1/2*	D	1968	CBA/F	A			11/07 ▸	03G121113	**820058**	88	Y
Touareg (2002>2006)													
3.2 i V6 24V	*7LAA*	E	3189	BKJ, BMV, AZZ	M			01/03 ▸	022121113	**820958**	80	Y
3.2 i V6 24V	*7LA/A/B*	E	3189	AZZ, BRJ, BMV, BAA, BKJ	A			11/02 ▸	022121113	**820958**	80	Y
4.2 i V8 40V	*7LA/A/B/C/D*	E	4172	AXQ	A			12/02 ▸	077121113C	**820557**	82	Y
2.5 TDi	*7LAA*	D	2460	BAC, BLK	M			01/03 ▸	070121114	**820983**	87	Y
2.5 TDi	*7LAA*	D	2460	BPD, BPE	M			11/05 ▸	022121113	**820958**	80	Y
2.5 TDi	*7LAA*	D	2460	BLK, BAC	A			01/03 ▸	070121114	**820983**	87	Y
2.5 TDi	*7LAA*	D	2460	BPD, BPE	A			11/05 ▸	022121113	**820958**	80	Y
Touareg II (2006>)													
2.5 TDi	*7L60*	D	2460	BPE, BPD	M			12/06 ▸	070121114	**820983**	87	Y
2.5 TDi	*7L60*	D	2460	BPD, BPE	A			12/06 ▸	070121114	**820983**	87	Y
Touran (2003>2006)													
1.6 i	*1T1/B/C/T*	E	1595	BGU	M			07/03 ▸	050121113C	**820171**	87	Y
2.0 FSi 16V ▸6-100 000	*1T1H, 1T1G, 1T1T*	E	1984	AXW,BLR,BLX,BLY	A			10/03 ▸ 10/05	06F121111	**820576**	105	Y
2.0 FSi 16V ▸6-100 000	*1T1G, 1T1T, 1T1H*	E	1984	AXW,BLX,BLY	M			10/03 ▸ 10/05	06F121111	**820576**	105	Y
1.9 TDi	*1T1/B/C/F/H/T*	D	1896	AVQ, BRU, BKC	M		☞4	02/03 ▸	044121113	**820168**	87	Y
1.9 TDi	*1T1/B/C/H/T*	D	1896	BKC	A		☞4	08/03 ▸	044121113	**820168**	87	Y
2.0 TDi 16V	*1T1/F/H/T*	D	1968	AZV, BMN, BKD	M			02/03 ▸	03G121113	**820058**	88	Y
2.0 TDi	*1T1/H/T*	D	1968	BMM	M		☞4	06/05 ▸ 11/06	03G121113A	**820168**	87	Y
2.0 TDi 16V	*1T1/H/T*	D	1968	BKD, BMN	A			08/03 ▸	03G121113	**820058**	88	Y
2.0 TDi	*1T1/H/T*	D	1968	BMM	A		☞4	06/05 ▸ 11/06	03G121113A	**820168**	87	Y
Touran (2006>)													
2.0 i	*1T2/C/H/T*	F	1984	BSX	M			11/06 ▸	050121113C	**820171**	87	Y
1.6 i	*1T2/A/C/T*	E	1595	BSF, BSE	M			11/06 ▸	050121113C	**820171**	87	Y
1.9 TDi	*1T2/A/C/H/T*	D	1896	BXE, BXF, BXJ, BLS	M		☞4	11/06 ▸	044121113	**820168**	87	Y
1.9 TDi	*1T2/A/C/H/T*	D	1896	BLS	A		☞4	11/06 ▸	03G121113A	**820168**	87	Y
2.0 TDi	*1T2/A/H/T*	D	1968	BMM	M		☞4	11/06 ▸	03G121113A	**820168**	87	Y
2.0 TDi	*1T2/A/H/T*	D	1968	BKD, AZV, BMN	M			11/06 ▸	03G121113	**820058**	88	Y
2.0 TDi	*1T2/A/H/T*	D	1968	BKD, BMN	A			11/06 ▸	03G121113	**820058**	88	Y
2.0 TDi	*1T2/A/H/T*	D	1968	BMM	A		☞4	11/06 ▸	03G121113A	**820168**	87	Y
Vento													
1.4 i	*1H2/2/3/B*	E	1390	AEX	M			07/95 ▸ 12/97	032121110B	**820962**	87	Y
1.4 i	*1H2/2/3*	E	1391	ABD	M		☞4	11/91 ▸ 07/95	030121113	**820132**	84	Y
1.6 i	*1H2/2/3*	E	1598	AEA, ABU	M		☞4	07/92 ▸ 07/95	030121113	**820132**	84	Y

• **New** Nouveau **Nuevo** Novo **Nuovo** Nieuw **Neu** Yeni Новый Nou

Type Ctr.		cc		AC		2 3	OE	Valeo	(°)C	
VOLKSWAGEN (.../...)										
Vento (.../...)										
1.6 i	1H2/2/3/4/5/B	E	1598	AKS, AFT, AEK	M		10/94 ▸ 12/97	056121113D	**819868**	87	Y
1.6 i	1H2/2/3/4/5/B	E	1598	AEA, AFT, AEK, AKS	M	☞4	10/94 ▸ 12/97	044121113	**820168**	87	Y
1.6 i	1H2/2/3	E	1598	AEE	M		07/95 ▸ 12/97	032121110B	**820962**	87	Y
1.6 i	1H2/2/3/4/B	E	1598	AFT, AEK	A		10/94 ▸ 12/97	056121113D	**819868**	87	Y
1.6 i	1H2/2/3/4/B	E	1598	AEK, AFT	A	☞4	10/94 ▸ 12/97	044121113	**820168**	87	Y
1.8 i	1H33, 1H2/2/3/4/5	E	1781	ABS, ADZ, AAM	M		11/91 ▸ 12/97	056121113D	**819868**	87	Y
1.8 i	1H33, 1H2/2/3/4/5	E	1781	AAM, ADZ, ABS	M	☞4	11/91 ▸ 12/97	044121113	**820168**	87	Y
1.8 i	1H2/2/3/4	E	1781	AAM, ABS, ADZ	A	☞4	01/92 ▸ 12/97	044121113	**820168**	87	Y
1.8 i	1H2/2/3/4	E	1781	ADZ, AAM, ABS	A		01/92 ▸ 12/97	056121113D	**819868**	87	Y
2.0 E	1H2/2/3/4/5	E	1984	AGG, 2E, ADY, AKR, AEP	M		11/91 ▸ 12/97	056121113D	**819868**	87	Y
2.0 E	1H2/2/3/4/5	E	1984	2E, ADY, AGG, AKR, AEP	M	☞4	11/91 ▸ 12/97	044121113	**820168**	87	Y
2.0 E	1H2/2/3/4	E	1984	AGG, AEP, 2E, ADY	A		11/91 ▸ 12/97	056121113D	**819868**	87	Y
2.0 E	1H2/2/3/4	E	1984	2E, AEP, AGG, ADY	A	☞4	11/91 ▸ 12/97	044121113	**820168**	87	Y
2.8 i,2.8 i VR6	1H25, 1H27	E	2792	AAA	A		07/92 ▸ 12/97	075121113D	**820065**	87	Y
2.8 i VR6	1H25, 1H27	E	2792	AAA	M		01/92 ▸ 12/97	075121113D	**820065**	87	Y
1.9 D,1.9 SDi,1.9 TD 1.9 TDi	1H2/2/3/4/5/B	D	1896	AEY, 1Z, AAZ, 1Y, AFN, ALE AHU	M	☞4	11/91 ▸ 12/97	044121113	**820168**	87	Y
1.9 TD,1.9 TDi	1H2/2/3/4/B	D	1896	AFN, 1Z, AAZ, AHU	A	☞4	01/92 ▸ 12/97	044121113	**820168**	87	Y
VOLKSWAGEN										
Caddy (82>92)										
1.5	147/0/7/8/9, 148/0/7/8/9	E	1457	JB	M		08/82 ▸ 07/83	056121113D	**819868**	87	Y
1.5	147/0/7/8/9, 148/0/7/8/9	E	1457	JB	M	☞4	08/82 ▸ 07/83	044121113	**820168**	87	Y
1.6	147/0/7/8/9	E	1588	EM	M	☞4	08/82 ▸ 07/83	044121113	**820168**	87	Y
1.6	147/0/7/8/9	E	1588	EM	M		08/82 ▸ 07/83	056121113D	**819868**	87	Y
1.6	147/0/7/8/9	E	1588	EM	A	☞4	08/82 ▸ 07/83	044121113	**820168**	87	Y
1.6	147/0/7/8/9	E	1588	EM	A		08/82 ▸ 07/83	056121113D	**819868**	87	Y
1.6	147/0/7/8/9, 1AE1, 148/0/7/8/9	E	1595	HN, EW	M		08/83 ▸ 07/92	056121113D	**819868**	87	Y
1.6	147/0/7/8/9, 1AE1, 148/0/7/8/9	E	1595	EW, HN	M	☞4	08/83 ▸ 07/92	044121113	**820168**	87	Y
1.6	147/0/7/8, 1AE1, 148/0/7/8	E	1595	EW, HN	A		08/83 ▸ 07/92	056121113D	**819868**	87	Y
1.6	147/0/7/8, 1AE1, 148/0/7/8	E	1595	EW, HN	A	☞4	08/83 ▸ 07/92	044121113	**820168**	87	Y
1.8 i	147/0/7/8, 1AE1, 148/0/7/8	E	1781	JH	M		08/85 ▸ 07/92	056121113D	**819868**	87	Y
1.8 i	147/0/7/8, 1AE1, 148/0/7/8	E	1781	JH	M	☞4	08/85 ▸ 07/92	044121113	**820168**	87	Y
1.8 i	147/0/7/8, 1AE1, 148/0/7/8	E	1781	JH	A		08/85 ▸ 07/92	056121113D	**819868**	87	Y
1.8 i	147/0/7/8, 1AE1, 148/0/7/8	E	1781	JH	A	☞4	08/85 ▸ 07/92	044121113	**820168**	87	Y
1.6 D	147/0/7/8/9, 1AE1, 148/0/7/8/9	D	1588	JK, ME	M	☞4	08/82 ▸ 07/92	044121113	**820168**	87	Y
Caddy (95>2004)										
1.4 i,1.4 i 16V	9K9/A/B	E	1390	AEX, APQ, AUA, AUD, AKV	M		11/95 ▸	032121110B	**820962**	87	Y
1.6 i	9K9/A/B	E	1595	1F	M	☞4	11/95 ▸ 05/97	044121113	**820168**	87	Y
1.6 i	9K9/A/B	E	1595	1F	M		11/95 ▸ 05/97	056121113D	**819868**	87	Y
1.6 i	9U71, 9K9/A/B	E	1598	AEE	M		06/96 ▸	032121110B	**820962**	87	Y
1.7 SDi	9K9/A/B	D	1716	AHB	M	☞4	07/96 ▸ 09/00	044121113	**820168**	87	Y
1.9 D,1.9 SDi,1.9 TDi	9U71, 9K9/A/B	D	1896	AHU, AYQ, 1Y, AEY, ALH, ALE 1Z, AEF	M	☞4	11/95 ▸	044121113	**820168**	87	Y
Caddy (2004>)										
2.0 i	2KA/A/B, 2KB/C/D	F	1984	BSX	M		04/06 ▸	050121113C	**820171**	87	Y
1.4 i 16V	2KA/A/B, 2KB/C/D	E	1390	BUD, BCA	M		02/04 ▸	032121110B	**820962**	87	Y
1.6 i	2KA/A/B, 2KB/C/D	E	1595	BSE, BSF, BGU	M		02/04 ▸	050121113C	**820171**	87	Y
1.9 TDi	2KA/A/B, 2KB/C/D	D	1896	BJB, BLS, BSU	M	☞4	02/04 ▸	044121113	**820168**	87	Y
1.9 TDi	2KA/A/B, 2KB/C/D	D	1896	BLS	A	☞4	06/05 ▸	03G121113A	**820168**	87	Y
2.0 SDi	2KA/A, 2KB/C/D	D	1968	BDJ	M		02/04 ▸	032121110B	**820962**	87	Y
2.0 SDi	2KA/A/B, 2KB/C/D	D	1968	BST, BDJ	M	☞4	02/04 ▸	044121113	**820168**	87	Y
Crafter										
2.5 TDi	2EA/0/1, 2EB/0/1, 2ED/0/1 2EH1, 2EK1, 2EX1, 2EY1 2EE/0/1, 2FC/0/1, 2FF/0 1, 2FL1, 2FM1, 2FG/0/1 2FZ/0/1	D	2459	BJK	M	☞4	04/06 ▸	069121113	**820063**	87	Y

• **New** Nouveau **Nuevo** Novo **Nuovo** Nieuw **Neu** Yeni Новый Nou

			Type Ctr.		CC			AC			OE	Valeo	(°)C
VOLKSWAGEN (.../...)													
Crafter (.../...)													
2.5 TDi	*2EA/0/1, 2EB/0/1, 2ED/0/1 2EH1, 2EK1, 2EX1, 2EY1 2EE/0/1, 2FC/0/1, 2FF/0 1, 2FL1, 2FM1, 2FG/0/1 2FZ/0/1*	D	2500	BJL, BJM, BJJ	M		☞4	04/06 ▸	069121113	**820063**	87	Y
LT (75>96)													
2.0	*281/0, 283/5/6, 2954, 291/0/1*	E	1984	CH, CL	M		☞8	04/75 ▸ 11/82	059121113B	**819852**	83	Y
2.4,2.4 i	*2916, 281G, 2968, 281K 293E, 2934, 2951*	E	2383	1E,DL	M			12/82 ▸	075121113D	**820065**	87	Y
2.4 D	*281/0, 2954, 291/1/2*	D	2383	CP	M		☞2	01/79 ▸ 11/82	078121113F	**820027**	87	Y
2.4 D,2.4 TD	*281G, 2915, 21D4, 21F6 293E, 2950, 2916, 2968 2951, 21K7, 21F7, 281K 2934, 21G3, 2810, 21A0 21A1, 21K8, 2815, 295Q 2969, 295Z*	D	2383	1G,1S,ACL,ACT,DV,DW	M			12/82 ▸ 12/95	075121113A	**820065**	87	Y
LT II (96>2003)													
2.3 i	*2DA/1, 2DB/0/1, 2DC/0/1, 2DD/0/2 2DE/0/1, 2DG1, 2DF/0/1/2, 2DK1 2DH/1/2, 2DL/1/2, 2DM/1/2*	E	2295	AGL	M		☞1	05/96 ▸	00A121113	**820184**	87	Y
2.5 SDi,2.5 TDI	*2DA/0/1, 2DB/0/1, 2DC/0/1 2DD/0/1/2, 2DE/0/1, 2DF 0/1/2, 2DG/0/1/2, 2DK1 2DH/1/2, 2DL/1/2, 2DM/1 2*	D	2460	AGX, APA, AHD, ANJ	M		☞4	05/96 ▸	069121113	**820063**	87	Y
2.5 TDI	*2DL1, 2DH1, 2DD0, 2DF0 2DK1, 2DG0, 2DF2, 2DD2 2DC1, 2DM1, 2DH2, 2DB1 2DC0, 2DG1, 2DG2, 2DD1 2DF1, 2DL2, 2DA1, 2DA0 2DE0, 2DE1, 2DM2, 2DB0*	D	2460	AHD	M			05/96 ▸ 05/99	075121113D	**820065**	87	Y
2.5 TDI	*2DA/0/1, 2DB/0/1, 2DC/0/1 2DD/0/1/2, 2DE/0/1, 2DF 0/1/2, 2DG/0/1/2, 2DK1 2DH/1/2, 2DL/1/2, 2DM/1 2*	D	2461	AVR, BBF, BBE	M		☞4	09/00 ▸	069121113	**820063**	87	Y
LT III (2003>)													
2.5 TDi	*2DA/0/1, 2DB/0/1, 2DC/0/1 2DD/0/1/2, 2DE/0/1, 2DF 0/1/2, 2DG/0/1/2, 2DK1 2DH/1/2, 2DL/1/2, 2DM/1 2*	D	2460	ANJ	M		☞4	06/03 ▸	069121113	**820063**	87	Y
2.5 TDi	*2DA/0/1, 2DB/0/1, 2DC/0/1 2DD/0/1/2, 2DE/0/1, 2DF 0/1/2, 2DG/0/1/2, 2DK1 2DH/1/2, 2DL/1/2, 2DM/1 2*	D	2461	AVR, BBE, BBF	M		☞4	06/03 ▸	069121113	**820063**	87	Y
2.8 TDi	*2DM1*	D	2799	AUH	M		☞4	06/03 ▸	069121113	**820063**	87	Y
Taro													
1.8	*7AE/1/2, 7AX/2/3*	E	1812	2Y	M			02/89 ▸ 09/94	J9091603046	**820510**	82	Y
2.2	*7AE/1/2, 7AX/2/3*	E	2236	4Y	M			06/89 ▸ 07/94	J9091603046	**820510**	82	Y
2.4 i	*7AE/1/2, 7AG/1/3, 7AX/2/3*	E	2366	22R-EC	M			06/89 ▸ 03/97	J9091603078	**820439**	88	Y
2.4 D ▸ 7A-S9501924	*7AE/1/2, 7AG/1/2/3, 7AX/2/3*	D	2446	2L	M		☞4,8	02/89 ▸ 04/95	J9091603099	**820174**	88	Y
Transporter (F24) (79>92)													
1.9	*245/0/1/G/H, 246/0/1, 247/0/3/A/G/K 248/0/3, 251/0/G/H, 252/0/D, 253/0 1/2/3/4/5/9/G/H/J/K/L/M/O/S/T, 254 0/2/3/4/5/9/D/F, 255/0/1/2/3/4/5/6 G/H/J/K/L/M/N/S/T, 256/0/1/2/3/4/5 E/F*	E	1915	DF,DG,DH,GW,SP	M			08/82 ▸ 07/92	025121113F	●**820788**	87	N

• **New** Nouveau **Nuevo** Novo **Nuovo** Nieuw **Neu** Yeni Новый Nou

VOLKSWAGEN (.../...)

Transporter (F24) (79>92) (.../...)

1.9	245/0/1/G/H, 246/0/1, 247/0/3/G/K 248/0/3, 251/0/G, 252/0/D, 253/0/1 2/3/4/5/9/G/H/J/K/L/M, 254/0/2/3/5 9/D/F, 255/0/1/2/4/5/6/G/H/J/K/L/M N, 256/0/2/3/4/E/F	E	1915	DG,DH,GW	A			08/82 ▸ 07/92	025121113F	●820788	87	N
2.1	245/0, 246/0/F/G, 247/0/3/A/C/G/K 248/0/A/G/K, 251/0/G, 252/0/G, 253 0/1/2/3/4/5/9/F/G/H/J/K/L/M/P/S/T 254/0/3/5/C/D/F/G/L/M, 255/0/1/2/3 4/5/6/F/G/H/J/K/L/M/N, 256/0/2/3/4 5/E/F/G/K/L	E	2109	DJ,MV	M			08/84 ▸ 07/92	025121113F	●820788	87	N
2.1		E	2109	DJ,MV,SR,SS	A			08/85 ▸ 09/91	025121113F	●820788	87	N
1.6 TD	2510	D	1588	JX	M	+		03/86 ▸ 09/91	056121113A	819867	80	Y
1.6 TD		D	1588	JX	A	+		08/84 ▸ 07/91	056121113A	819867	80	Y

Transporter (F70) (90>96)

1.8	70A/1, 70B/1/C/K/M, 70E1, 70H1, 70C 2/3, 70J/1/C/K/M, 70L1, 70M1, 70K/2 3	E	1781	PD	M		☞4	09/90 ▸ 07/92	044121113	820168	87	Y
2.0	70A/1, 70B/1/C/K/M/T, 70E1, 70H1 70C/2/3, 70J/1/C/K/M/T/W, 70L1 70M1, 70K/2/3	E	1968	AAC	M		☞4	09/90 ▸ 12/95	044121113	820168	87	Y
2.0	70A/1, 70B/1/C/K/M/T, 70E1, 70H1 70C/2/3, 70J/1/C/K/T, 70L1, 70M1 70K/2/3	E	1968	AAC	A		☞4	09/90 ▸ 12/95	044121113	820168	87	Y
2.0	70A1, 70BK	E	1968	AAC	A		☞4	09/90 ▸ 12/95	069121113	820063	87	Y
2.0	70A1	E	1968	AAC	A			09/90 ▸ 07/91	075121113D	820065	87	Y
2.5,2.5 i	70A1, 70JT, 70BK, 70BT 70M1, 70L1	E	2460	AAF,ACU	M			09/90 ▸ 05/96	075121113D	820065	87	Y
2.5	70BC	E	2460	AAF	M		☞4	09/90 ▸ 12/94	044121113	820168	87	Y
2.5,2.5 i	70A/1, 70B/1/C/K/M/T 70E1, 70H1, 70C/2/3, 70J 1/C/K/M/T/W, 70L1, 70M1 70K/2/3/K	E	2460	ACU, AEN, AAF	M		☞4	09/90 ▸	069121113	820063	87	Y
2.5	70BC	E	2460	AAF	A		☞4	09/90 ▸ 12/95	044121113	820168	87	Y
2.5	70A/1, 70B/1/K/M/T, 70E1, 70H1, 70C 2/3, 70J/1/C/K/M/T/W, 70L1, 70M1 70K/2/3	E	2460	ACU, AAF	A		☞4	10/91 ▸ 12/95	069121113	820063	87	Y
1.9 D,1.9 TD	70A/1, 70B/1/K/M/T, 70E1 70H1, 70C/2/3, 70J/1/C/K M/T/W, 70L1, 70M1, 70K/2 3	D	1896	1X, ABL	M		☞4	09/90 ▸ 12/95	044121113	820168	87	Y
1.9 D	70BC	D	1896	1X	M		☞4	09/90 ▸ 12/95	069121113	820063	87	Y
1.9 D	70BC	D	1896	1X	M			09/90 ▸ 07/94	075121113D	820065	87	Y
2.4 D	70A1	D	2370	AAB	A			05/92 ▸ 12/95	075121113D	820065	87	Y
2.4 D	70C3, 70JC, 70B1, 70C2, 70J1, 70BK 70JW, 70JT, 70BM, 70BT, 70K2, 70A1 70L1, 70KK, 70M1, 70H1, 70BC, 70K3 70E1, 70JK	D	2370	AAB	M			09/90 ▸ 05/96	075121113D	820065	87	Y
2.4 D	70A/1, 70B/1/C/K/M/T, 70E1, 70H1 70C/2/3, 70J/1/C/K/T/W, 70L1, 70M1 70K/2/3/K	D	2370	AAB	M		☞4	09/90 ▸	069121113	820063	87	Y
2.4 D	70A/1, 70B/1/K/M/T, 70E1, 70H1, 70C 2/3, 70J/1/C/K/M/T/W, 70L1, 70M1 70K/2/3	D	2370	AAB	A		☞4	09/90 ▸ 12/95	069121113	820063	87	Y
2.5 TDI	70A/1, 70B/1/K/M/T, 70E1 70C/2/3, 70H/1/3, 70K2 70L1, 70M1, 70J/1/K/W	D	2460	ACV	M		☞4	09/95 ▸ 12/95	069121113	820063	87	Y

Transporter (F7D) (96>2003)

2.0 i	7DA/1, 7DB/1/K, 7DE1, 7DH1, 7DC/2/3 A/G/M/T/U, 7DJ/1/K, 7DL1, 7DM1, 7DK 2/3/M/W	E	1968	AAC	M		☞4	01/96 ▸	044121113	820168	87	Y

• **New** Nouveau **Nuevo** Novo **Nuovo** Nieuw **Neu** Yeni Новый Nou

VOLKSWAGEN (.../...)

Transporter (F7D) (96>2003) (.../...)

			CC		AC			OE	Valeo	(°)C	
2.5 i	7DA/1, 7DB/1/K, 7DE1, 7DH1, 7DC/1/2 3/A/G/M/T/U, 7DJ/1/K, 7DL1, 7DM1 7DK/2/3/J/T/W	E	2460	AEU, AET, APL, ACU, AVT	M		☞4	01/96 ▸	069121113	**820063**	87	Y
2.5 i	7DA/1, 7DB/1/K, 7DE1, 7DH1, 7DC/2/3 A/G/M/T/U, 7DJ/1/K, 7DL1, 7DM1, 7DK 2/3/T/W	E	2460	APL, ACU, AEU, AVT, AET	A		☞4	01/96 ▸	069121113	**820063**	87	Y
2.5 i	7DA1, 7DBK, 7DB1, 7DCM, 7DCT, 7DL1 7DM1, 7DC2, 7DKT, 7DE1, 7DJ1, 7DJK 7DH1, 7DK2, 7DC3, 7DCU	E	2460	ACU,AET,AEU,APL,AVT	A			05/96 ▸ 06/03	075121113D	**820065**	87	Y
2.5 i	7DJ1, 7DCM, 7DE1, 7DA1, 7DM1, 7DK2 7DCT, 7DKT, 7DJK, 7DC2, 7DL1, 7DB1 7DCU, 7DH1, 7DBK, 7DC3, 7DC1	E	2460	ACU,AET,AEU,APL,AVT	M			05/96 ▸ 06/03	075121113D	**820065**	87	Y
2.8 i V6 24V 70-2-275 001 ▸	7DE1, 7DH1, 7DC/2/M/T/U 7DL1, 7DK/2/T	E	2792	AMV	A			04/02 ▸ 06/03	022121113	**820958**	80	Y
1.9 TD	7DA/1, 7DB/1/K, 7DE1 7DH1, 7DC/2/3/A/G/M/T/U 7DJ/1/K, 7DL1, 7DM1, 7DK 2/3/M/T/W	D	1896	ABL	M		☞4	01/96 ▸	044121113	**820168**	87	Y
2.4 D	7DA/1, 7DB/1/K, 7DE1, 7DH1, 7DC/2/3 A/G/M/T/U, 7DJ/1/K, 7DL1, 7DM1, 7DK 2/3/T/W	D	2370	AJA, AAB	M		☞4	01/96 ▸	069121113	**820063**	87	Y
2.4 D	7DA/1, 7DB/1/K, 7DE1, 7DH1, 7DC/2/3 A/G/M/T/U, 7DJ/1/K, 7DL1, 7DM1, 7DK 2/3/T/W	D	2370	AAB, AJA	A		☞4	01/96 ▸ 06/03	069121113	**820063**	87	Y
2.4 D	7DA1, 7DKT, 7DB1, 7DCM, 7DCA, 7DE1 7DL1, 7DJ1, 7DKW, 7DJK, 7DBK, 7DCT 7DC3, 7DC2, 7DH1, 7DK2, 7DCG, 7DM1 7DK3	D	2370	AAB,AJA	A			01/96 ▸ 06/03	075121113D	**820065**	87	Y
2.4 D	7DB1, 7DM1, 7DCT, 7DBK, 7DL1, 7DCG 7DK3, 7DCM, 7DC2, 7DE1, 7DCA, 7DKT 7DH1, 7DC3, 7DJK, 7DK2, 7DA1, 7DCU 7DJ1, 7DKW	D	2370	AAB,AJA	M			01/96 ▸ 06/03	075121113D	**820065**	87	Y
2.5 TDi	7DA/1, 7DB/1/K, 7DE1 7DH1, 7DC/1/2/3/A/G/M/T U, 7DJ/1/K, 7DL1, 7DM1 7DK/2/3/T/W	D	2460	ACV, AYC, AHY, AXL	M		☞4	01/96 ▸	069121113	**820063**	87	Y
2.5 DTi,2.5 TDi	7DA/1, 7DB/1/K, 7DE1 7DH1, 7DC/2/M/T/U, 7DJ/1 K, 7DL1, 7DM1, 7DK/2/T	D	2460	ACV, AXL, AUF, AYC	A		☞4	01/96 ▸	069121113	**820063**	87	Y
2.5 DTi,2.5 TDi	7DK2, 7DB1, 7DM1, 7DKT 7DCM, 7DL1, 7DJ1, 7DE1	D	2460	ACV,AXL	A			08/96 ▸ 06/03	075121113D	**820065**	87	Y
2.5 TDi	7DC3, 7DJ1, 7DC1, 7DM1 7DK2, 7DB1, 7DCT, 7DCM 7DA1, 7DJK, 7DKT, 7DH1 7DE1, 7DCG, 7DL1, 7DKW 7DCA, 7DBK, 7DC2, 7DK3 7DCU	D	2460	ACV,AXL	M			01/96 ▸ 06/03	075121113D	**820065**	87	Y
2.5 TDi	7DA/1, 7DB/1/K, 7DE1 7DH1, 7DC/2/M/T/U, 7DJ/1 K, 7DL1, 7DM1, 7DK/2/T	D	2461	AXG, AYY, AJT	M		☞4	05/98 ▸ 06/03	069121113	**820063**	87	Y
2.5 TDi	7DL1	D	2461	AJT	M			05/98 ▸ 10/01	075121113D	**820065**	87	Y
2.8 i V6 24V,2.8 i VR6	7DC3, 7DKT, 7DK2, 7DA1 7DCM, 7DBK, 7DE1, 7DCU 7DKM, 7DL1, 7DB1, 7DCT 7DKW, 7DH1, 7DC2, 7DJK 7DK3, 7DM1, 7DCG, 7DCA 7DJ1	E	2792	AES,AMV	A			01/96 ▸	075121113D	**820065**	87	Y

• **New** Nouveau **Nuevo** Novo **Nuovo** Nieuw **Neu** Yeni Новый Nou

		E	2792	AES	M			01/96 ▸ 06/03	075121113D	**820065**	87	Y
	7DM1, 7DJK, 7DCT, 7DK3 7DBK, 7DJ1, 7DKT, 7DKW 7DC2, 7DCA, 7DB1, 7DH1 7DC3, 7DE1, 7DCM, 7DCG 7DA1, 7DL1, 7DKM, 7DCU 7DK2											
Transporter (7J/7H) (2003>)												
2.0 i	*7HA/1, 7HB/1/S/X, 7HH1, 7HC/T/W 7HJ/1/S, 7JD1, 7JE1, 7JL1, 7HM/B/C H*	E	1984	AXA	M			06/03 ▸	050121113C	**820171**	87	Y
3.2 i V6 24V	*7HA/1, 7HH1, 7HB/1/S, 7HJ 1/S, 7JD1, 7JE1, 7JL1 7HM/B/C/H*	E	3189	BKK, BDL	M			02/04 ▸	022121113	**820958**	80	Y
3.2 i 24V,3.2 i V6 24V	*7HA/1, 7HB/1/S/X, 7HH1 7HC/T/W, 7HJ/1/S, 7JD1 7JE1, 7JL1, 7HM/B/C/H/Y*	E	3189	BDL, BKK	A			05/03 ▸	022121113	**820958**	80	Y
1.9 TDI	*7HA/1, 7HB/1/S/X, 7HC/T/W 7HH1, 7HF/D/E, 7HJ/1/S/X 7JD1, 7JE1, 7JL1, 7JZ1 7HM/B/C/H*	D	1896	AXB, BRR, AXC, BRS	M		☞4	04/03 ▸	044121113	**820168**	87	Y
2.5 TDI	*7HA/1, 7HB/1/M/S/X, 7HC/T W, 7HH1, 7HF/D/E, 7HJ/1/S X, 7JD1, 7JE1, 7JL1, 7JY1 7JZ1, 7HM/B/C/H/Y*	D	2460	BNZ, AXD, AXE, BLJ	M			04/03 ▸	070121114	**820983**	87	Y
2.5 TDI	*7HA/1, 7HB/1/S/X, 7HC/T/W 7HH1, 7HF/D/E, 7HJ/1/S/X 7JD1, 7JE1, 7JL1, 7JY1 7JZ1, 7HM/B/C/H/Y*	D	2460	AXE, AXD, BNZ	A			05/03 ▸	070121114	**820983**	87	Y
VOLVO												
340-360												
1.4	*345521, 345523, 344533, 343521 343531, 343523, 343533, 345531 345533*	E	1397	B14-4S, B14-40, B14-4E	M		☞10	09/82 ▸	32672354	**819924**	89	N
1.4	*343520, 345520, 345530, 343530 344530*	E	1397	B14-40, B14-4E	A		☞10	09/82 ▸	32672354	**819924**	89	N
2.0	*345233, 344213, 345213, 343243 344243, 344283, 345283, 345243 343213, 344233*	E	1986	B200K, B19E, B200E, B19A	M		☞8	09/82 ▸	2734598	**819933**	88	Y
2.0	*344213*	E	1986	B200K	M		☞8	07/84 ▸	2734598	**819933**	88	Y
2.0	*344210*	E	1986	B200K	A		☞8	07/85 ▸	2734598	**819933**	88	Y
1.6 D	*344723*	D	1595	D16	M			07/84 ▸	32879603	**819862**	89	Y
1.6 D	*345723, 343723, 344723*	D	1595	D16	M			08/84 ▸	32879603	**819862**	89	Y
440-460-480												
1.6	*LX173E*	E	1596	B16F	M		☞1	10/91 ▸ 06/97	33446162	**820177**	92	Y
1.6 i	*KX173E*	E	1596	B16F	M		☞1	10/91 ▸ 06/97	33446162	**820177**	92	Y
1.7	*EX083E, EX173E, EX183E, EX143E EX053E*	E	1721	B18EP, B18FP, B18F, B18E B18ED	M		☞1	07/86 ▸	33446162	**820177**	92	Y
1.7 i	*KX183E, KX143E*	E	1721	B18FP, B18EP	M		☞1	07/89 ▸ 1992	33446162	**820177**	92	Y
1.7 i,1.7 i Turbo	*LX063E, LX143E, LX183E*	E	1721	B18FTM, B18EP, B18FP	M		☞1	01/90 ▸ 1992	33446162	**820177**	92	Y
1.7	*EX145E, EX085E*	E	1721	B18E, B18EP	A		☞1	07/86 ▸	33446162	**820177**	92	Y
1.7 i	*KX145E, KX185E*	E	1721	B18EP, B18FP	A		☞1	10/88 ▸ 1992	33446162	**820177**	92	Y
1.7 i	*LX185E, LX145E*	E	1721	B18FP, B18EP	A		☞1	01/90 ▸ 06/95	33446162	**820177**	92	Y
1.7	*KX023E, KX013E*	E	1783	B18KP, B18K	M		☞1	10/88 ▸ 1992	33446162	**820177**	92	Y
1.7	*LX023E*	E	1783	B18KP	M		☞1	01/90 ▸ 1992	33446162	**820177**	92	Y
1.8 i	*LX163E*	E	1794	B18U	M		☞1	10/91 ▸ 06/95	33446162	**820177**	92	Y
1.8 i	*KX163E, KX153E*	E	1794	B18U, B18U-200	M		☞1	10/91 ▸ 06/97	33446162	**820177**	92	Y
1.8 i	*KX156E, KX166E*	E	1794	B18U-200, B18U	A		☞1	08/94 ▸ 06/97	33446162	**820177**	92	Y
2.0	*EX313E*	E	1998	B20F	M		☞1	10/92 ▸	33446162	**820177**	92	Y
2.0 i	*KX313E*	E	1998	B20F	M		☞1	10/92 ▸ 06/97	33446162	**820177**	92	Y

• **New** Nouveau **Nuevo** Novo **Nuovo** Nieuw **Neu** Yeni Новый Nou

VOLVO (.../...)

440-460-480 (.../...)

2.0	*LX313E*	E	1998	B20F	M		☞1	07/93 ▸ 06/97	33446162	**820177**	92	Y
2.0	*EX315E*	E	1998	B20F	A		☞1	10/92 ▸	33446162	**820177**	92	Y
2.0 i	*KX315E*	E	1998	B20F	A		☞1	10/92 ▸ 06/97	33446162	**820177**	92	Y
2.0	*LX315E*	E	1998	B20F	A		☞1	07/93 ▸ 06/97	33446162	**820177**	92	Y
1.9 TD	*LX705E, LX706E*	D	1870	D19TEGR	A		☞4	07/94 ▸ 12/94	3470390	**820010**	83	Y
1.9 TD	*KX706E, KX705E*	D	1870	D19TEGR	A		☞4	07/94 ▸ 12/94	3485203	**820534**	89	Y
1.9 TD	*LX705E, LX706E*	D	1870	D19TEGR	A		☞4	07/94 ▸ 12/94	3485203	**820534**	89	Y
1.9 TD	*KX705E, KX706E*	D	1870	D19TEGR	A		☞4	07/94 ▸ 12/94	3470390	**820010**	83	Y
1.9 TD ▸ 600000	*KX793E, KX703E*	D	1870	D19T, D19TEGR	M		☞4	07/94 ▸	3470390	**820010**	83	Y
1.9 TD ▸ 600000	*LX703E, LX793E*	D	1870	D19TEGR, D19T	M		☞4	07/94 ▸	3470390	**820010**	83	Y
1.9 TD ▸ 600000	*LX703E, LX793E*	D	1870	D19TEGR, D19T	M		☞4	07/94 ▸	3485203	**820534**	89	Y
1.9 TD ▸ 600000	*KX703E, KX793E*	D	1870	D19TEGR, D19T	M		☞4	07/94 ▸	3485203	**820534**	89	Y
1.9 TD 600001 ▸ 617193	*KX793E, KX703E*	D	1870	D19T, D19TEGR	M				3473479	**820008**	89	Y
1.9 TD 600001 ▸ 617193	*LX703E, LX793E*	D	1870	D19TEGR, D19T	M			07/94 ▸	3473479	**820008**	89	Y

740-760-780

2.0,2.0 16V,2.0 Turbo 2.0 Turbo 16V 2.0 Turbo Intercooler	*745203, 745282, 745233* *704262, 744203, 744233* *745273, 745252, 745243* *744243, 744262, 745293* *745262, 744252, 744293* *704243, 744273, 744282*	E	1986	B200G, B204GT, B200K, B200ET B200F, B204FT, B200E, B200FT B204E	M		☞8	07/84 ▸ 08/94	2734598	**819933**	88	Y
2.0,2.0 Turbo 2.0 Turbo Intercooler	*745262, 744273, 744243* *744262, 745203, 745233* *745243, 744203, 704262* *704243, 744233, 745273*	E	1986	B200FT, B200F, B200E, B200ET B200G, B200K	M		☞8	07/84 ▸ 08/94	2733079	**820526**	92	Y
2.0 Turbo,2.0 Turbo 16V	*782282, 782262*	E	1986	B204GT, B200ET	M		☞8	03/85 ▸ 07/90	2734598	**819933**	88	Y
2.0 Turbo,2.0 Turbo 16V	*782282, 782262*	E	1986	B204GT, B200ET	M		☞8	03/85 ▸ 07/90	2733079	**820526**	92	Y
2.0	*704247, 745277, 745237, 744247* *744277, 744237, 745247*	E	1986	B200E, B200F, B200K	A		☞8	07/84 ▸ 07/91	2733079	**820526**	92	Y
2.0	*745247, 704247, 744237, 744277* *745237, 745277, 744247*	E	1986	B200E, B200K, B200F	A		☞8	07/84 ▸ 07/91	2734598	**819933**	88	Y
2.3 Turbo 2.3 Turbo Intercooler	*764872, 704862, 764862*	E	2316	B230FT, B230ET	M		☞8	07/83 ▸ 1990	2734598	**819933**	88	Y
2.3,2.3 16V,2.3 Turbo 2.3 Turbo Intercooler	*745872, 744833, 745813* *745822, 744822, 745853* *744862, 745862, 744842* *744872, 744883, 744802* *744892, 744813, 745842* *745802, 745833, 745883* *745892, 704842, 744853*	E	2316	B230FT, B230K, B230A, B230GT B230FB, B230FTX, B230ET B230E, B230F, B230G, B234F	M		☞8	07/84 ▸ 08/94	2734598	**819933**	88	Y
2.3,2.3 Turbo 2.3 Turbo Intercooler	*744872, 744842, 745822* *745862, 745813, 745872* *745802, 744833, 744802* *745853, 745883, 704842* *745842, 744813, 745833* *744883, 744862, 744853* *744822*	E	2316	B230FTX, B230E, B230GT B230ET, B230A, B230G, B230FT B230K, B230FB, B230F	M		☞8	07/84 ▸ 08/94	2733079	**820526**	92	Y
2.3 Turbo 2.3 Turbo Intercooler	*704865, 764865*	E	2316	B230ET	A		☞8	07/83 ▸ 1988	2734598	**819933**	88	Y
2.3	*745855, 704845, 744845, 744886* *745845, 745886, 744855*	E	2316	B230FB, B230E, B230F	A		☞8	07/84 ▸ 08/94	2734598	**819933**	88	Y
2.3	*745855, 744845, 704845, 745845* *744855, 744886, 745886*	E	2316	B230FB, B230E, B230F	A		☞8	07/84 ▸ 08/94	2733079	**820526**	92	Y
2.8	*764687, 765697, 764697, 704687* *765687*	E	2849	B280E,B280EC,B280F,B280FC B28E	A			02/82 ▸ 1990	2734804	**819841**	87	Y
2.4 TD,2.4 TD Intercooler	*764752, 765752, 764762* *704762*	D	2383	D24TIC, D24T, D24T-109	M			02/82 ▸ 1990	2737286	**820063**	87	Y

• **New** Nouveau **Nuevo** Novo **Nuovo** Nieuw **Neu** Yeni Новый Nou

Type Ctr.		cc		AC		2 3	OE	Valeo	(°)C	
VOLVO (.../...)										
740-760-780 (.../...)										
2.4 D,2.4 TD *745773, 744762, 704773 745752, 745762, 744773 744752*	D	2383	D24, D24T, D24TIC	M			07/84 ▸ 08/94	2737286	**820063**	87	Y
2.4 TD Intercooler *782752*	D	2383	D24TICEGR	M			03/85 ▸ 07/91	2737286	**820063**	87	Y
2.4 TD,2.4 TD Intercooler *704765, 764755, 764765*	D	2383	D24T-109, D24TIC, D24T	A			02/82 ▸ 1990	2737286	**820063**	87	Y
2.4 TD *745755, 745765, 744755 744765*	D	2383	D24TIC, D24T	A			07/85 ▸ 08/94	2737286	**820063**	87	Y
850										
2.0 10V,2.0 20V 2.0 Turbo 20V *LW4502, LS4702, LS4122 LS4502, LW4122, LW4702*	E	1984	B5204FS, B5204T2, B5202FS	M		☞8	06/91 ▸ 12/96	2716645	●**819926**	92	Y
2.0 10V,2.0 20V 2.0 Turbo 20V *LS4126, LW4126, LW4706 LS4506, LW4506, LS4706*	E	1984	B5202FS, B5204T2, B5204FS	A		☞8	06/91 ▸ 12/96	2716645	●**819926**	92	Y
2.3 Turbo,2.3 Turbo 20V *LS5802, LS5702, LW5802 LW5702*	E	2318	B5234T5, B5234T	M		☞8	03/93 ▸ 12/96	2716645	●**819926**	92	Y
2.3 Turbo,2.3 Turbo 20V *LW5706, LS5706, LS5806 LW5806*	E	2318	B5234T, B5234T5	A		☞8	03/93 ▸ 12/96	2716645	●**819926**	92	Y
2.5 10V,2.5 20V 2.5 i Turbo 20V *LW5502, LS5502, LW5602 LS5102, LW5102*	E	2435	B5254FS, B5254T, B5252FS	M		☞8	06/91 ▸ 12/96	2716645	●**819926**	92	Y
2.5 10V,2.5 20V *LS5506, LW5106, LW5506 LS5106*	E	2435	B5254FS, B5252FS	A		☞8	06/91 ▸ 12/96	2716645	●**819926**	92	Y
2.5 TDi 10V *LS7202, LW7202*	D	2461	D5252T	M		☞4	02/96 ▸ 12/96	2722460	**820063**	87	Y
940-960										
2.0 Turbo *945212*	E	1986	B200FT	M		☞8	1994 ▸	2733079	**820526**	92	Y
2.0 Turbo,2.0 Turbo 16V *965212, 964252, 964212*	E	1986	B200FT, B204FT	M		☞8	1994 ▸ 08/96	2733079	**820526**	92	Y
2.0 Turbo,2.0 Turbo 16V *964252, 964212, 965212 965252*	E	1986	B204FT, B200FT	M		☞8	09/90 ▸ 08/94	2734598	**819933**	88	Y
2.0,2.0 16V,2.0 Turbo 2.0 Turbo 16V *945252, 945273, 944203 944252, 945243, 944243 945203, 944272, 945292 944292, 944212, 945212*	E	1986	B204FT, B200F, B200G, B200E B204E, B200FT	M		☞8	09/90 ▸	2734598	**819933**	88	Y
2.0 *944207, 945247, 945207, 944247 944277, 945277*	E	1986	B200G, B200E, B200F	A		☞8	09/90 ▸ 08/94	2734598	**819933**	88	Y
2.3,2.3 16V,2.3 Turbo *945833, 944812, 945892 945853, 944853, 944802 944892, 944872, 945812 944833, 945802, 945872*	E	2316	B230FD, B234G, B234F, B230FB B230G, B230FT	M		☞8	09/90 ▸	2734598	**819933**	88	Y
2.3 Turbo *964822, 965872, 964872*	E	2316	B230GT, B230FT	M		☞8	09/90 ▸ 1994	2734598	**819933**	88	Y
2.3,2.3 Turbo *945843, 945833, 944802 944833, 945853, 945811 944811, 944843, 944853 944813, 944872*	E	2316	B230GK, B230FD, B230G, B230FB B230FK, B230FT	M		☞8	09/94 ▸	2733079	**820526**	92	Y
2.3 Turbo *965822, 964872, 965872 964822, 964843, 965843*	E	2316	B230GT, B230FT, B230GK	M		☞8	09/94 ▸ 08/96	2733079	**820526**	92	Y
2.3 Turbo *965875, 965825, 964875*	E	2316	B230FT, B230GT	A		☞8	1994 ▸ 08/96	2733079	**820526**	92	Y
2.3 Turbo *965825, 964875, 965875 964825*	E	2316	B230GT, B230FT	A		☞8	09/90 ▸ 08/94	2734598	**819933**	88	Y
2.3 *944855, 945855, 944836, 944805 945836, 945805*	E	2316	B230FB, B230FD, B230G	A		☞8	09/90 ▸	2734598	**819933**	88	Y
2.3,2.3 Turbo *944836, 944855, 945855 945816, 944816, 944845 945845, 945836, 944805*	E	2316	B230FD, B230FB, B230FK B230GK, B230G	A		☞8	09/94 ▸	2733079	**820526**	92	Y
2.5 *965931, 965991, 964991, 964931*	E	2473	B6254F, B6254G	M		☞8	09/94 ▸ 08/96	2716645	●**819926**	92	Y
2.5 *965996, 964936, 965936, 964996*	E	2473	B6254G, B6254F	A		☞8	09/94 ▸ 08/96	2716645	●**819926**	92	Y
2.8 i *964696, 964686*	E	2849	B280E,B280F	A			09/90 ▸ 08/91	2734804	**819841**	87	Y
3.0 24V *965956, 964956, 964986 965986*	E	2922	B6304F, B6304G	A		☞8	09/90 ▸ 08/96	2716645	●**819926**	92	Y
2.4 TD *944741, 945752, 944753 944762, 944742, 944752 945742, 944763, 945762 945753, 945741*	D	2383	D24TICEGR, D24TIC, D24T	M			09/90 ▸	2737286	**820063**	87	Y
2.4 TD *965742, 965752, 964742 964752*	D	2383	D24TICEGR, D24TIC	M			09/90 ▸ 08/96	2737286	**820063**	87	Y

• **New** Nouveau **Nuevo** Novo **Nuovo** Nieuw **Neu** Yeni Новый Nou

			Type Ctr.		CC			AC			OE	Valeo	(°)C
VOLVO (.../...)													
940-960 (.../...)													
2.4 TD	*964745, 965745, 965755 964755*	D		2383	D24TICEGR, D24TIC	A			09/90 ▸ 08/96	2737286	**820063**	87	Y
2.4 TD	*945755, 944745, 945763 944765, 945745, 944755*	D		2383	D24TIC, D24TICEGR, D24T	A			09/90 ▸	2737286	**820063**	87	Y
C30													
1.6 D Turbo 16V		D		1560	D4164T	M	+/-		10/06 ▸ 04/10	30711526	●**820951**	83	Y
2.4 TDi 20V		D		2401	D5244T8,D5244T9	A	+/-		10/06 ▸	30777476	●**820836**	90	Y
2.4 TDi 20V		D		2401	D5244T8,D5244T9	A			10/06 ▸	30650469	●**820836**	90	Y
S40 (95>2004)													
1.6 i 16V	*VS, VS1113*	E		1587	B4164S-D3, B4164S2, B4164S	M		☞8	01/97 ▸	2716645	●**819926**	92	Y
1.8 i 16V	*VS1213, VS*	E		1731	B4184S, B4184S-D3	M		☞8	10/95 ▸ 08/99	2716645	●**819926**	92	Y
1.8 i 16V	*VS1216, VS*	E		1731	B4184S, B4184S-D3	A		☞8	10/95 ▸ 08/99	2716645	●**819926**	92	Y
1.8 i 16V	*VS*	E		1783	B4184S2, B4184S3	M		☞8	04/99 ▸	2716645	●**819926**	92	Y
1.8 i 16V	*VS*	E		1783	B4184S2	A		☞8	04/99 ▸	2716645	●**819926**	92	Y
1.8 i 16V	*VS*	E		1834	B4184SM	M		☞8	03/98 ▸	2716645	●**819926**	92	Y
1.8 i 16V	*VS*	E		1834	B4184SM	A		☞8	03/98 ▸	2716645	●**819926**	92	Y
1.9 i Turbo 16V	*VS*	E		1855	B4194T	M		☞8	05/97 ▸	2716645	●**819926**	92	Y
1.9 i Turbo 16V	*VS*	E		1855	B4194T	A		☞8	05/97 ▸	2716645	●**819926**	92	Y
2.0 i 16V,2.0 i Turbo 16V	*VS1613, VS*	E		1948	B4204S, B4204T, B4204S2	M		☞8	10/95 ▸	2716645	●**819926**	92	Y
2.0 i 16V,2.0 i Turbo 16V	*VS1616, VS*	E		1948	B4204S, B4204T, B4204S2	A		☞8	10/95 ▸	2716645	●**819926**	92	Y
S40 (2004>)													
1.6 i 16V	*MS2042*	E		1596	B4164S3	M		☞8	01/05 ▸	271664	●**819926**	92	Y
1.8 i 16V		E		1798	B4184S11	M		☞8	03/04 ▸	271664	●**819926**	92	Y
2.0 D 16V		D		1998	D4204T	M			03/04 ▸	8653805	**820976**	84	N
1.6 D 16V		D		1560	D4164T	M			01/05 ▸ 04/10	30711526	●**820951**	83	Y
2.4 D5 20V		D		2401	D5244T,D5244T2,D5244T4 D5244T5,D5244T7	A			02/06 ▸	30650469	●**820836**	90	Y
V40													
1.6 i 16V	*VW1103, VW1113, VW*	E		1587	B4164S, B4164S-D3, B4164S2	M		☞8	05/97 ▸	2716645	●**819926**	92	Y
1.8 i 16V	*VW, VW1213*	E		1731	B4184S-D3, B4184S	M		☞8	10/95 ▸	2716645	●**819926**	92	Y
1.8 i 16V	*VW1216, VW*	E		1731	B4184S, B4184S-D3	A		☞8	10/95 ▸	2716645	●**819926**	92	Y
1.8 i 16V	*VW*	E		1783	B4184S2, B4184S3	M		☞8	04/99 ▸	2716645	●**819926**	92	Y
1.8 i 16V	*VW*	E		1783	B4184S2	A		☞8	04/99 ▸	2716645	●**819926**	92	Y
1.9 T 16V	*VW*	E		1855	B4194T2	M		☞8	05/97 ▸ 07/00	2716645	●**819926**	92	Y
1.9 T 16V	*VW*	E		1855	B4194T2	A		☞8	05/97 ▸ 07/00	2716645	●**819926**	92	Y
2.0 T Turbo 16V,2.0 i 16V	*VW, VW1613*	E		1948	B4204T, B4204S, B4204S2	M		☞8	10/95 ▸	2716645	●**819926**	92	Y
2.0 T Turbo 16V,2.0 i 16V	*VW, VW1616*	E		1948	B4204T, B4204S, B4204S2	A		☞8	10/95 ▸	2716645	●**819926**	92	Y
V50													
2.0 D 16V	*MW7552, MW7551*	D		1998	D4204T	M			03/04 ▸	30735589	**820976**	84	N
1.6 D 16V	*MW7652*	D		1560	D4164T	M			01/05 ▸ 09/10	30711526	●**820951**	83	Y
2.4 D5 20V	*MW7749*	D		2401	D5244T,D5244T2	A			02/06 ▸	30650469	●**820836**	90	Y
S60													
2.4 i CNG 20V 2.4 i GPL 20V	*HV3249*	G		2435	B5244SG, B5244SG2	M			06/01 ▸	30637217	**820974**	90	Y
2.4 i CNG 20V,2.4 i GPL 20V		G		2435	B5244SG, B5244SG2	A			06/01 ▸	30637217	**820974**	90	Y
2.0 i Turbo 20V		E		1984	B5204T5	M			08/00 ▸	30637217	**820974**	90	Y
2.0 i Turbo 20V		E		1984	B5204T5	A			08/00 ▸	30637217	**820974**	90	Y
2.3 i Turbo 20V	*RS53K2*	E		2318	B5234T3	M			08/00 ▸	30637217	**820974**	90	Y
2.3 i Turbo 20V	*RS53K9*	E		2318	B5234T3	A			08/00 ▸	30637217	**820974**	90	Y
2.3 i Turbo 20V		E		2319	B5234T7-E2	A			08/00 ▸	30637217	**820974**	90	Y
2.4 i 20V	*RS5449*	E		2401	B5244T5	A			02/04 ▸ 03/09	30650469	●**820836**	90	Y
2.4 i 20V	*RS5441*	E		2401	B5254T2,B5254T4	M			02/04 ▸ 03/09	30650469	●**820836**	90	Y
2.4 i 20V,2.4 i Turbo 20V	*RS61P2, RS65P2, RS58K2 RS58K3*	E		2435	B5244S, B5244S2, B5244T3	M			08/00 ▸	30637217	**820974**	90	Y
2.4 i 20V,2.4 i Turbo 20V	*RS65P9, RS58K7, RS58K9 RS61P9*	E		2435	B5244S2, B5244T3, B5244S	A			08/00 ▸	30637217	**820974**	90	Y
2.5 i Turbo 20V	*RS5957, RS5249, RS5247 RS5959*	E		2521	B5254T2,B5254T4	A			02/04 ▸ 03/09	30650469	●**820836**	90	Y

• **New** Nouveau **Nuevo** Novo **Nuovo** Nieuw **Neu** Yeni Новый Nou

Type Ctr.		CC		AC		2 3	OE	Valeo	(°)C	
VOLVO (.../...)										
S60 (.../...)										
2.5 i Turbo 20V *RS5952, RS5444, RS5446 RS59G3, RS5953*	E	2521	D5244T,D5244T2	M			02/04 ▸ 03/09	30650469	●820836	90	Y
2.4 TDi 20V *RS7932, RS7432*	D	2401	D5244T, D5244T2	M			06/01 ▸	30637217	820974	90	Y
2.4 TDi 20V *RS7939*	D	2401	D5244T, D5244T2	A			06/01 ▸	30637217	820974	90	Y
2.4 TDi 20V *RS7999, RS7439, RS7469 RS7939, RS7141, RS8149*	D	2401	B5244T5	A			06/01 ▸ 03/09	30650469	●820836	90	Y
C70										
2.3 i Turbo 20V *LC5302*	E	2316	B5234T3-240	M		☞8	03/97 ▸	2716645	●819926	92	Y
2.4 i Turbo 20V *LC5662*	E	2435	B5254T	M		☞8	03/97 ▸	2716645	●819926	92	Y
C70 CC (2006>)										
2.4 TDi 20V	D	2401	D5244T8	A	+		01/06 ▸	30777476	●820836	90	Y
2.4 TDi 20V	D	2401	D5244T8,D5244T9	A			01/07 ▸	30650469	●820836	90	Y
S70										
2.4 i GPL 20V 2.5 i GPL 10V *LS3402, LS3302*	G	2435	GB5252S2, B5244SG2	M		☞8	06/98 ▸ 11/00	2716645	●819926	92	Y
2.4 i GPL 20V 2.5 i GPL 10V *LS3406, LS3309, LS3106*	G	2435	GB5252S2, B5244SG2, GB5252S	A		☞8	05/97 ▸ 11/00	2716645	●819926	92	Y
2.0 i 10V,2.0 i 20V *LS4703, LS4302, LS4702* 2.0 i Turbo 20V *LS4602, LS4102*	E	1984	B5204T3, B5204T4, B5204T2 B5202FS	M		☞8	12/96 ▸ 11/00	2716645	●819926	92	Y
2.0 i 10V,2.0 i 20V *LS4306, LS4606, LS4706* 2.0 i Turbo 20V *LS4106*	E	1984	B5204T4, B5204T2, B5204T3 B5202FS	A		☞8	12/96 ▸ 11/00	2716645	●819926	92	Y
2.3 i 20V,2.3 i Turbo 20V *LS5002, LS5402, LS5302*	E	2318	B5234T4, B5234FS, B5234T3	M		☞8	12/96 ▸	2716645	●819926	92	Y
2.3 i 20V,2.3 i Turbo 20V *LS5906, LS5406, LS5366 LS5306*	E	2318	B5234T2, B5234FS, B5234T3	A		☞8	12/96 ▸	2716645	●819926	92	Y
2.3 i Turbo 20V *LS5706*	E	2319	B5234T7-E6	A		☞8	05/97 ▸ 11/00	2716645	●819926	92	Y
2.4 i 20V,2.4 i Turbo 20V *LS5663, LS5522, LS5662* 2.5 i 10V,2.5 i 20V *LS5603, LS6102, LS6502* 2.5 i Turbo 20V *LS5602, LS5502, LS5122*	E	2435	B5254T, B5254FS, B5244T B5244S, B5244S2, B5254S B5252FS	M		☞8	12/96 ▸ 11/00	2716645	●819926	92	Y
2.4 i 20V,2.4 i Turbo 20V *LS5666, LS5606, LS5506* 2.5 i 10V,2.5 i 20V *LS6107, LS5126, LS6509* 2.5 i Turbo 20V *LS5608, LS5526, LS6109*	E	2435	B5254T, B5244T, B5254S B5244S, B5252FS, B5244S2 B5254FS	A		☞8	12/96 ▸ 11/00	2716645	●819926	92	Y
2.4 TDi 10V *LS7202*	D	2461	D5252T	M		☞4	12/96 ▸	2722460	820063	87	Y
2.4 TDi 10V *LS7206*	D	2461	D5252T	A		☞4	12/96 ▸	2722460	820063	87	Y
V70 (96>99)										
2.0 i 10V *LW4102*	E	1984	B5202FS	M		☞8	05/97 ▸ 06/98	2716645	●819926	92	Y
2.0 i 10V *LW4106*	E	1984	B5202FS	A		☞8	05/97 ▸ 06/98	2716645	●819926	92	Y
2.3 i Turbo 20V *LW5302, LW5062, LW5002*	E	2318	B5234T3, B5234T4	M		☞8	05/97 ▸ 06/98	2716645	●819926	92	Y
2.3 i Turbo 20V *LW5306, LW5266, LW5366*	E	2318	B5234T3, B5234T6	A		☞8	05/97 ▸ 06/98	2716645	●819926	92	Y
2.5 i 10V,2.5 i 20V *LW5522, LW5122, LW5663* 2.5 i Turbo 20V *LW5662*	E	2435	B5254FS, B5252FS, B5254T	M		☞8	12/96 ▸ 12/99	2716645	●819926	92	Y
2.5 i 10V,2.5 i 20V *LW5666, LW5526, LW5126* 2.5 i Turbo 20V	E	2435	B5254T, B5254FS, B5252FS	A		☞8	12/96 ▸ 12/99	2716645	●819926	92	Y
2.4 TDi 10V *LW7202*	D	2461	D5252T	M		☞4	05/97 ▸ 06/98	2722460	820063	87	Y
2.4 TDi 10V *LW7206*	D	2461	D5252T	A		☞4	05/97 ▸ 06/98	2722460	820063	87	Y
V70 (2000>2007)										
2.0 i Turbo 20V	E	1984	B5204T5	M		☞8	01/00 ▸	271664	●819926	92	Y
2.0 i Turbo 20V	E	1984	B5204T5	A		☞8	01/00 ▸	271664	●819926	92	Y
2.0 i Turbo 20V	E	1984	B5204T5	A			01/00 ▸ 04/07	30650469	●820836	90	Y
2.0 i Turbo 20V	E	1984	B5234T3-E2	M			01/00 ▸ 04/07	30650469	●820836	90	Y
2.3 i 20V	E	2319	B5234T3-E2	A			01/00 ▸ 2004	30650469	●820836	90	Y
2.3 i 20V	E	2319	B5244T5	M			01/00 ▸ 2004	30650469	●820836	90	Y
2.4 i 20V	E	2401	B5244T5	A			04/04 ▸ 04/07	30650469	●820836	90	Y
2.4 i 20V	E	2401	B5244S,B5244S2,B5244T3	M			04/04 ▸ 04/07	30650469	●820836	90	Y
2.4 i 20V	E	2435	B5244S	M			01/01 ▸	30650022	820974	90	Y
2.4 i 20V	E	2435	B5244S	M		☞8	01/01 ▸ 12/02	271664	●819926	92	Y
2.4 i 20V	E	2435	B5244S	A		☞8	01/01 ▸ 12/02	271664	●819926	92	Y
2.4 i 20V	E	2435	B5244S	A			01/01 ▸	30650022	820974	90	Y
2.4 i 20V	G	2435	B5244SG,B5244SG2	A			01/01 ▸ 04/07	30650469	●820836	90	Y
2.4 i 20V	G	2435	D5244T,D5244T4	M			01/01 ▸ 04/07	30650469	●820836	90	Y

• **New** Nouveau **Nuevo** Novo **Nuovo** Nieuw **Neu** Yeni Новый Nou

			CC		AC			OE	Valeo	(°)C		
VOLVO (.../...)												
V70 (2000>2007) (.../...)												
2.4 i 20V		E	2435	B5244S,B5244S2,B5244T3	A			01/00 ▸ 04/07	30650469	●820836	90	Y
2.4 i 20V		E	2435	B5254T2,B5254T4	M			01/00 ▸ 04/07	30650469	●820836	90	Y
2.5 T 20V		E	2521	B5254T2,B5254T4	A			01/02 ▸ 04/07	30650469	●820836	90	Y
2.5 T 20V	*SW5244*	E	2521	B5244SG,B5244SG2	M			01/02 ▸ 04/07	30650469	●820836	90	Y
2.4 TDi 20V		D	2401	D5244T,D5244T2,D5244T3 D5244T5,D5244T6,D5244T7	A			01/00 ▸ 04/07	30650469	●820836	90	Y
2.4 TDi 20V		D	2401	B5204T5	M			01/00 ▸ 04/07	30650469	●820836	90	Y
S80 (98>2006)												
2.0 i 20V,2.0 i Turbo 20V		E	1984	B5204T3, B5204T4	M		☞8	06/98 ▸	2716645	●819926	92	Y
2.0 i 20V,2.0 i Turbo 20V		E	1984	B5204T4, B5204T3	A		☞8	06/98 ▸	2716645	●819926	92	Y
2.0 i 20V,2.0 i Turbo 20V	*TS48C2, TS43C6, TS4949 TS49K9*	E	1984	B5204T3,B5204T4,B5204T5	A			2000 ▸ 02/06	30650469	●820836	90	Y
2.0 i 20V,2.0 i Turbo 20V	*TS48C6, TS4942, TS43C2 TS49K2*	E	1984	B5244S2,B5244T3	M			2000 ▸ 02/06	30650469	●820836	90	Y
2.4 i 20V		E	2435	B5244S, B5244S2	M		☞8	06/98 ▸	2716645	●819926	92	Y
2.4 i 20V		E	2435	B5244S, B5244S2	A		☞8	06/98 ▸	2716645	●819926	92	Y
2.4 i CNG 20V,2.4 i GPL 20V		G	2435	B5244SG,B5244SG2	A			09/01 ▸ 02/06	30650469	●820836	90	Y
2.4 i CNG 20V,2.4 i GPL 20V		G	2435	D5244T8,D5244T9	M			09/01 ▸ 02/06	30650469	●820836	90	Y
2.4 i 20V,2.4 i Turbo 20V	*TS6549, TS58K9*	E	2435	B5244S2,B5244T3	A			08/00 ▸ 02/06	30650469	●820836	90	Y
2.4 i 20V,2.4 i Turbo 20V	*TS6542, TS58K2*	E	2435	B5254T2	M			08/00 ▸ 02/06	30650469	●820836	90	Y
2.5 i Turbo 20V	*TS5957*	E	2521	B5254T2	A			07/03 ▸ 02/06	30650469	●820836	90	Y
2.5 i Turbo 20V	*TS5952*	E	2521	B5244SG,B5244SG2	M			07/03 ▸ 02/06	30650469	●820836	90	Y
2.4 TDi 20V		D	2401	D5244T	M		☞8	07/01 ▸	271664	●819926	92	Y
2.4 TDi 20V		D	2401	D5244T	A		☞8	07/01 ▸	271664	●819926	92	Y
2.4 TDi 20V	*TS7939, TS7439*	D	2401	D5244T,D5244T2	A			07/01 ▸ 02/06	30650469	●820836	90	Y
2.4 TDi 20V	*TS7932, TS7432*	D	2401	B5204T3,B5204T4,B5204T5	M			07/01 ▸ 02/06	30650469	●820836	90	Y
2.4 TDi 10V		D	2461	D5252T	M		☞4	06/98 ▸	272246	820063	87	Y
2.4 TDi 10V		D	2461	D5252T	A		☞4	06/98 ▸	272246	820063	87	Y
S90												
3.0	*964961*	E	2922	B6304S2	M		☞8	09/96 ▸	2716645	●819926	92	Y
3.0	*964956*	E	2922	B6304S1	A		☞8	09/96 ▸	2716645	●819926	92	Y
V90												
3.0	*965961*	E	2922	B6304S2	M		☞8	09/96 ▸	2716645	●819926	92	Y
3.0	*965956, 965966*	E	2922	B6304S1, B6304S2	A		☞8	09/96 ▸	2716645	●819926	92	Y
XC 70 (97>99)												
2.0 i 20V		E	1984	B5204T3	M		☞8	12/97 ▸ 12/99	2716645	●819926	92	Y
2.4 i 20V,2.5 i 20V		E	2435	B5254T, B5244T	M		☞8	12/97 ▸ 12/99	2716645	●819926	92	Y
2.4 i 20V,2.5 i 20V		E	2435	B5244T, B5254T	A		☞8	12/97 ▸ 12/99	2716645	●819926	92	Y
XC 70 (2000>2007)												
2.3 i Turbo 20V		E	2319	B5234T7-E2	A		☞8	01/00 ▸ 12/04	2716645	●819926	92	Y
2.4 i Turbo 20V		E	2435	B5244T3	M		☞8	05/02 ▸ 09/02	2716645	●819926	92	Y
2.4 i Turbo 20V		E	2435	B5244T3	A		☞8	05/02 ▸ 09/02	2716645	●819926	92	Y
2.4 i Turbo 20V		E	2435	B5254T2	A			01/05 ▸ 03/07	30650469	●820836	90	Y
2.5 T 20V 3264758 ▸		E	2521	B5254T2	A			▸ 03/07	30650469	●820836	90	Y
2.5 T 20V 3264758 ▸		E	2521	D5244T,D5244T4,D5244T5	M			▸ 03/07	30650469	●820836	90	Y
2.4 TDi 20V		D	2401	D5244T,D5244T4	A			08/02 ▸ 03/07	30650469	●820836	90	Y
2.4 TDi 20V		D	2401	B5244T4	M			08/02 ▸ 03/07	30650469	●820836	90	Y
XC 90 (2002>)												
2.5 T 20V 3264758 ▸	*CM5857*	E	2521	B5254T2	A			▸ 09/07	30650469	●820836	90	Y
2.5 T 20V 3264758 ▸		E	2521	D5244T8,D5244T9	M			▸ 09/07	30650469	●820836	90	Y
2.4 TDi 20V	*CM7144*	D	2401	D5244T,D5244T4,D5244T5	A			05/02 ▸	30650469	●820836	90	Y

• **New** Nouveau **Nuevo** Novo **Nuovo** Nieuw **Neu** Yeni Новый Nou

Type Ctr.		CC			AC				OE	Valeo	(°)C	
VOLVO (.../...)												
XC 90 (2002>) (.../...)												
2.4 TDi 20V	CM7146	D	2401	B5254T2	M			05/02 ▸	30650469	●820836	90	Y

• **New** Nouveau **Nuevo** Novo **Nuovo** Nieuw **Neu** Yeni Новый Nou

THERMOSWITCH

THERMOCONTACT / TERMOCONTACTO / INTERRUPTORE TERMICO / THERMOSCHALTER

VALEO PRODUCT CHARACTERISTICS

Caractéristiques du produit Valeo / Características del producto Valeo / Caratteristiche del prodotto Valeo / Valeo Produktmerkmale

SCREW FIXATION

Fixation par vis / Fijación con rosca / Montaggio con filettatura / Schraubenfixierung

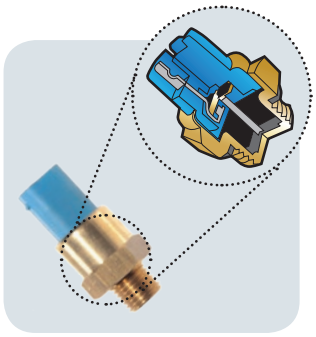

SINGLE PIN

- FR Mono-Broche
- SP Mono-contacto
- IT Mono-contatto
- DE Einzelkontakt

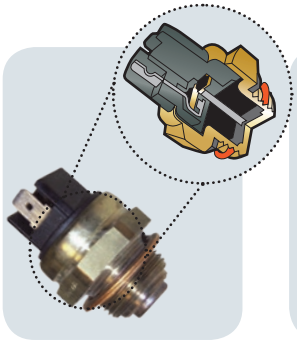

DUAL OR MULTI-PIN

- FR Double ou multi-broches
- SP Doble o multicontacto
- IT Doppio o multi-contatto
- DE Doppel-oder Multikontakt

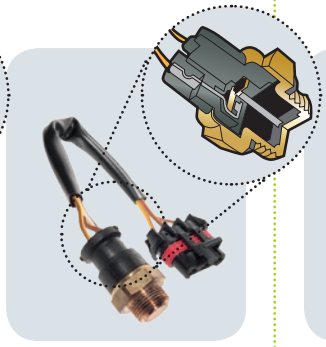

HARNESS INTEGRATED

- FR Faisceau integré
- SP Cable integrado
- IT Cavo integrato
- DE Integrierter Kabelstrang

CLIP FIXATION

Fixation par clip / Fijación con clip
Fissagio con clip / Clip-Halterung

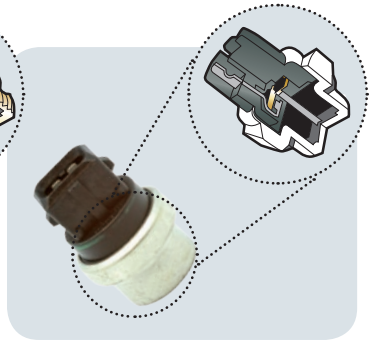

DUAL OR MULTI-PIN

- FR Double ou multi-broches
- SP Doble o multicontacto
- IT Doppio o multi-contatto
- DE Doppel-oder Multikontakt

POSITION IN VEHICLE

Position dans le véhicule / Posición en vehículo / Posizione nel veicolo / Position Im Fahrzeug

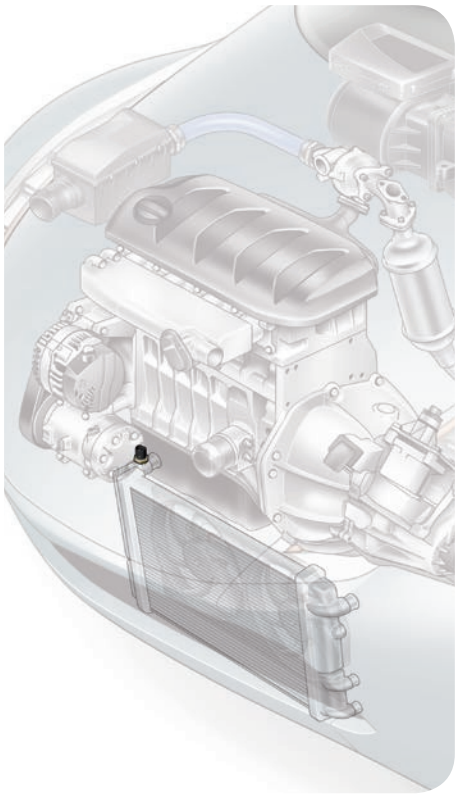

- EN The thermoswitch is mounted at the radiator liquid coolant outlet
- FR Le thermocontact est monté à la sortie du radiateur de liquide de refroidissement
- SP El termocontacto se encuentra en la manguera de salida del radiador de liquido refrigerante
- IT Il interrutore termico è nel tubo di uscita del radiatore refrigerante liquido
- DE Der Thermoschalter ist am Kühlerausgang der Kühlflüssigkeit angebracht

INTERFACE

Interface / Interfaz / Interfaccia / Schnittstelle

CONNECTOR (NUMBER OF PINS)

- FR Connecteur (Nombre de broches)
- SP Conector (Numéro de contactos)
- IT Connettore (Numero di Pin)
- DE Anschluss (Anzahl der Pins)

M-BOLT STANDARD SIZES

- FR Taille standard de vis
- SP Tamaño estándar de tornillo
- IT Dimensioni standardizzate
- DE Standardgrößen

ACCESSORIES

OF PRODUCT FOR MOUNTING*

Accessoires de produit pour le montage* /
Accesorios del producto para el montaje* /
Accessori del prodotto per il montaggio* /
Zubehör für den Einbau des Produkts*

- EN * There are several configurations in the range
- FR * Il existe plusieurs configurations dans l'offre
- SP * Existen varias configuraciones en la gama
- IT * Non tutti i riferimenti possono avere gli accessori, così come indicato nell'immagine
- DE * Mehrere Konfigurationen Werden Angeboten

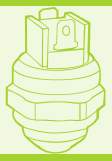

3

		Type Ctr.		cc		AC			OE	Valeo	(°)C T1	T2	T3	T4	COD.	mm
ALFA ROMEO																
33 (83>89)																
1200	905A	E	1189	AR30500	M			08/83 ▸ 07/89	60542409	**819744**	82		92		22X1.5	29
1.3 AS,1.3 DC	905A1	E	1351	AR30502, AS30587, AS30168 AR30512, AS30568, AR30168	M			08/83 ▸ 07/89	60542409	**819744**	82		92		22X1.5	29
1.5,1.5 AS,1.5 DC,1.5 i	905A2	E	1490	AS30508, AR30514, AR30182 AR30146, AR30526, AR30520 AR30504	M			08/83 ▸ 07/89	60542409	**819744**	82		92		22X1.5	29
1.7 i,1.7 ie	905/A3/A4	E	1712	AS30550, AS30558, AR30558 AR30550	M			09/86 ▸ 07/89	0060503687	**819744**	82		92		22X1.5	29
1.8 TD	905A4	D	1779	VM82A	M			09/86 ▸ 07/89	60533503	**819772**	79	83	84	88	22X1.5	29
1.8 TD	905A4	D	1779	VM82A	M			09/86 ▸ 07/89	0060503687	**819744**	82		92		22X1.5	29
33 (89>94)																
1.2	907A4	E	1186	AR30743	M			08/89 ▸ 03/92	60564432	**819759**	87		92		22X1.5	29
1.2	907A4	E	1186	AR30743	M			03/92 ▸ 09/94	0060585603	**819774**	87		92		22X1.5	29
1.2	907A4	E	1186	AR30743	M		+ Cable	03/92 ▸ 09/94	60585603	**820315**	87	92	92	97	22X1.5	29
1.3,1.3 ie,1.4 ie	907/A3/B3	E	1351	AR30732, AR30755	M			08/89 ▸ 03/92	60564432	**819759**	87		92		22X1.5	29
1.3,1.3 ie,1.4 ie	907/A3/B3	E	1351	AR30755, AR30732	M		+ Cable	03/92 ▸ 09/94	60585603	**820315**	87	92	92	97	22X1.5	29
1.3,1.3 ie,1.4 ie	907/A3/B3	E	1351	AR30755, AR30732	M			03/92 ▸ 09/94	0060585603	**819774**	87		92		22X1.5	29
1.5,1.5 ie	907/A2/B2	E	1490	AR30751, AR30750, AR30734	M			08/89 ▸ 03/92	60564432	**819759**	87		92		22X1.5	29
1.5,1.5 ie	907/A2/B2	E	1490	AR30750, AR30751, AR30734	M		+ Cable	03/92 ▸ 09/94	60585603	**820315**	87	92	92	97	22X1.5	29
1.5,1.5 ie	907/A2/B2	E	1490	AR30751, AR30750, AR30734	M			03/92 ▸ 09/94	0060585603	**819774**	87		92		22X1.5	29
1.7 i 16V,1.7 ie	907/A1/AB/B1	E	1712	AR30737, AR30736, AR60746 AR30746, AR30747	M			08/89 ▸ 03/92	60564432	**819759**	87		92		22X1.5	29
1.7 i 16V,1.7 ie	907/A1/AB/B1	E	1712	AR30737, AR30736, AR30746 AR60746, AR30747	M		+ Cable	03/92 ▸ 09/94	60585603	**820315**	87	92	92	97	22X1.5	29
1.7 i 16V,1.7 ie	907/A1/AB/B1	E	1712	AR30747, AR30736, AR60746 AR30746, AR30737	M			03/92 ▸ 09/94	0060585603	**819774**	87		92		22X1.5	29
1.8 TD	907A5	D	1779	VM96A	M			03/92 ▸ 09/94	60533503	**819772**	79	83	84	88	22X1.5	29
75																
1.6,1.6 ie	162B2	E	1570	AR06100, AR61101, AR61102	M			05/85 ▸ 1993	0060506988	**819749**	75		85		22X1.5	29
1.8 Turbo,1.8 Turbo E 1.8 i,1.8 ie	162B1	E	1779	AR06158, AR06202, AR61202 AR06134, AR61201, AR06168 AR61203	M			05/85 ▸ 1993	0060506988	**819749**	75		85		22X1.5	29
2.0,2.0 i Twin Spark	162/B4/BA/BF	E	1962	AR06224, AR06166, AR06212	M			05/85 ▸ 1993	0060506988	**819749**	75		85		22X1.5	29
2.5 i V6	162B3	E	2492	AR01646	M			05/85 ▸ 08/88	0060506988	**819749**	75		85		22X1.5	29
2.5 i V6	162B3	E	2492	AR01646, AR01911	A			09/88 ▸ 1993	0060506988	**819749**	75		85		22X1.5	29
3.0 i V6	162B6	E	2959	AR06120, AR61503	M			06/87 ▸ 1993	0060506988	**819749**	75		85		22X1.5	29
2.0 TD	162/BD/BG	D	1995	VM80A	M			02/86 ▸ 1993	0060506988	**819749**	75		85		22X1.5	29
2.4 TD	162B5	D	2393	VM81A	M			09/88 ▸ 1993	0060506988	**819749**	75		85		22X1.5	29
90																
1.8 i,1800 i	162A1	E	1779	AR06202	M			09/84 ▸ 1988	0060506988	**819749**	75		85		22X1.5	29
2.0 i,2000,2000 i	162A2	E	1962	AR01713, AR06212	M			09/84 ▸ 1988	0060506988	**819749**	75		85		22X1.5	29
2.0 i V6,2000 i V6	162A2	E	1997	AR06210	M			06/86 ▸ 1988	0060506988	**819749**	75		85		22X1.5	29
2.5 i V6,2500 i V6	162/A/A//AA	E	2492	AR01646, AR01911	M			09/84 ▸ 1988	0060506988	**819749**	75		85		22X1.5	29
2.4 TD,2400 TD	162A3	D	2393	VM81A	M			09/84 ▸ 1988	0060506988	**819749**	75		85		22X1.5	29
145																
1.3 i	930A3	E	1351	AR33501	M	+/-	+ Cable	09/94 ▸ 12/96	0060806748	**820315**	87	92	92	97	22X1.5	29
1.3 i	930A3	E	1351	AR33501	M	+		11/95 ▸ 12/96	0060503687	**819744**	82		92		22X1.5	29
1.3 i	930A3	E	1351	AR33501	M	-		09/94 ▸ 12/96	0060585603	**819774**	87		92		22X1.5	29
1.4 i Twin Spark 16V	930A3	E	1370	AR33503	M	+		12/96 ▸ 02/98	0060813343	**820031**	87	92	92	97	22X1.5	29
1.6 i	930A2	E	1596	AR33201	M	+/-	+ Cable	09/94 ▸ 12/96	0060806748	**820315**	87	92	92	97	22X1.5	29
1.6 i	930A2	E	1596	AR33201	M	-		09/94 ▸ 12/96	0060585603	**819774**	87		92		22X1.5	29
1.6 i Twin Spark 16V	930A2	E	1598	AR67601	M	+		12/96 ▸ 06/01	0060813343	**820031**	87	92	92	97	22X1.5	29
1.7 i 16V	930A1	E	1712	AR33401	M	+/-	+ Cable	09/94 ▸ 12/96	0060806748	**820315**	87	92	92	97	22X1.5	29
1.7 i 16V	930A1	E	1712	AR33401	M	-		09/94 ▸ 12/96	0060585603	**819774**	87		92		22X1.5	29
1.8 i Twin Spark 16V	930A1	E	1747	AR67199, AR67106	M	+/-		12/96 ▸ 03/98	0060813343	**820031**	87	92	92	97	22X1.5	29
2.0 i 16V	930A5	E	1970	AR67299, AR67204	M	+/-		11/95 ▸ 03/98	0060813343	**820031**	87	92	92	97	22X1.5	29
1.9 JTD	930A4	D	1910	AR32302	M	+	+ Cable	03/99 ▸ 06/01	0060806748	**820315**	87	92	92	97	22X1.5	29
1.9 TD	930A4	D	1929	AR67501, AR33601	M	+	+ Cable	12/96 ▸ 03/99	0060806748	**820315**	87	92	92	97	22X1.5	29

• **New** Nouveau **Nuevo** Novo **Nuovo** Nieuw **Neu** Yeni Новый Nou

		Type Ctr.		CC			AC			OE	Valeo	(°)C T1	T2	T3	T4	COD.	☼: mm	
ALFA ROMEO (.../...)																		
145 (.../...)																		
1.9 TD	*930A4*	D	1929	AR33601, AR67501		M	-		09/94 ▸ 03/99	46478033	**819827**	83	87	88	92	22X1.5	29	
146																		
1.3 i	*930B3*	E	1351	AR33501		M			12/94 ▸ 12/96	0060585603	**819774**	87		92		22X1.5	29	
1.3 i	*930B3*	E	1351	AR33501		M		+ Cable	12/94 ▸ 12/96	0060806748	**820315**	87	92	92	97	22X1.5	29	
1.4 i Twin Spark 16V	*930B3*	E	1370	AR33503		M	+		12/96 ▸ 02/98	0060813343	**820031**	87	92	92	97	22X1.5	29	
1.6 i	*930B2*	E	1596	AR33201		M			12/94 ▸ 12/96	0060585603	**819774**	87		92		22X1.5	29	
1.6 i	*930B2*	E	1596	AR33201		M		+ Cable	12/94 ▸ 12/96	0060806748	**820315**	87	92	92	97	22X1.5	29	
1.6 i Twin Spark 16V	*930B2*	E	1598	AR67601		M	+		12/96 ▸ 06/01	0060813343	**820031**	87	92	92	97	22X1.5	29	
1.7 i 16V	*930B1*	E	1712	AR33401		M		+ Cable	12/94 ▸ 12/96	0060806748	**820315**	87	92	92	97	22X1.5	29	
1.7 i 16V	*930B1*	E	1712	AR33401		M			12/94 ▸ 12/96	0060585603	**819774**	87		92		22X1.5	29	
1.8 i Twin Spark 16V	*930B1*	E	1747	AR67106		M	+		12/96 ▸ 06/01	0060813343	**820031**	87	92	92	97	22X1.5	29	
2.0 i 16V	*930B5*	E	1970	AR67204		M	+		12/96 ▸ 06/01	0060813343	**820031**	87	92	92	97	22X1.5	29	
1.9 TDs	*930B4*	D	1929	AR33601, AR67501		M	+	+ Cable	12/96 ▸ 06/01	0060806748	**820315**	87	92	92	97	22X1.5	29	
155																		
1.6 i Twin Spark 16V	*167A6*	E	1598	AR67601		M	+		04/96 ▸ 08/97	46477717	**820031**	87	92	92	97	22X1.5	29	
1.7 i Twin Spark 16V	*167A4*	E	1747	AR67106		M	+		04/96 ▸ 08/97	46477717	**820031**	87	92	92	97	22X1.5	29	
1.7 i Twin Spark	*167A4*	E	1749	AR67103, AR67105		M	+/-	+ Cable	11/91 ▸	60585603	**820315**	87	92	92	97	22X1.5	29	
1.7 i Twin Spark 0136807 ▸	*167A4*	E	1749	AR67103		M	+		1996 ▸ 08/97	46477717	**820031**	87	92	92	97	22X1.5	29	
1.7 i Twin Spark	*167A4*	E	1749	AR67105, AR67103		M			11/91 ▸ 08/97	0060585603	**819774**	87		92		22X1.5	29	
1.8 i Twin Spark	*167A4*	E	1773	AR67102, AR67101		M	+/-	+ Cable	11/91 ▸ 03/95	60585603	**820315**	87	92	92	97	22X1.5	29	
1.8 i Twin Spark	*167A4*	E	1773	AR67102, AR67101		M			11/91 ▸ 03/95	0060585603	**819774**	87		92		22X1.5	29	
2.0 i Twin Spark 16V	*167A2*	E	1970	AR67204, AR67299		M	+		03/95 ▸ 08/97	46477717	**820031**	87	92	92	97	22X1.5	29	
2.0 i Turbo 2.0 i Twin Spark	*167A2*	E	1995	AR67203, AR67201, AR67202		M	+/-	+ Cable	11/91 ▸ 08/97	0060593572	**820315**	87	92	92	97	22X1.5	29	
2.0 i Twin Spark	*167A2*	E	1995	AR67202, AR67201		M			11/91 ▸ 03/95	0060585603	**819774**	87		92		22X1.5	29	
2.5 i V6 0136807 ▸	*167A1*	E	2492	AR67303		M	+		1996 ▸ 08/97	46477717	**820031**	87	92	92	97	22X1.5	29	
2.5 i V6	*167A1*	E	2492	AR67302, AR67303, AR67301		M			11/91 ▸ 08/97	0060808223	**819774**	87		92		22X1.5	29	
2.5 i V6 ▸ 0136806	*167A1*	E	2492	AR67303, AR67301, AR67302		M	+	+ Cable	11/91 ▸ 1996	0060543482	**820315**	87	92	92	97	22X1.5	29	
1.9 TD	*167A3*	D	1929	AR67501, AR33601		M	+/-	+ Cable	07/93 ▸ 08/97	0060593573	**820232**	83	87	88	92	22X1.5	29	
1.9 TD	*167A3*	D	1929	AR33601		M			04/96 ▸ 08/97	0060809965	**819827**	83	87	88	92	22X1.5	29	
2.5 TD	*167A1*	D	2500	VM31B, VM07B		M			07/93 ▸ 08/97	46477717	**820031**	87	92	92	97	22X1.5	29	
164 (87>92)																		
2.0 i Twin Spark	*164A2*	E	1962	AR06416		M			10/90 ▸ 09/92	0060503687	**819744**	82		92		22X1.5	29	
2.0 i Twin Spark	*164A2*	E	1962	AR06420, AR06416		M			07/87 ▸	0060506988	**819749**	75		85		22X1.5	29	
2.0 Turbo	*164A2*	E	1995	AR06476		M			07/87 ▸ 09/92	0060506988	**819749**	75		85		22X1.5	29	
2.0 V6 Turbo	*164A2*	E	1997	AR64102, AR64101		M			10/90 ▸ 09/92	0060506988	**819749**	75		85		22X1.5	29	
3.0 i V6	*164/A/AB/AD/AG/AH/AX*	E	2959	AR64301, AR06410, AR06412		M			07/87 ▸ 09/92	0060503687	**819744**	82		92		22X1.5	29	
3.0 i V6	*164/A/AB/AD/AG/AH/AX*	E	2959	AR64301, AR06412, AR06410		M			07/87 ▸	0060506988	**819749**	75		85		22X1.5	29	
3.0 i V6	*164/AB/AM*	E	2959	AR06412		A			07/87 ▸ 09/92	0060503687	**819744**	82		92		22X1.5	29	
3.0 i V6	*164/AB/AM*	E	2959	AR06412		A			07/87 ▸	0060506988	**819749**	75		85		22X1.5	29	
2.5 TD	*164A1*	D	2500	VM84A		M			07/87 ▸ 09/92	0060506988	**819749**	75		85		22X1.5	29	
164 (92>98)																		
2.0 i Twin Spark	*164H3*	E	1962	AR64103		M			09/92 ▸ 09/98	0060503687	**819744**	82		92		22X1.5	29	
2.0 V6 Turbo ▸ 0009746	*164K3*	E	1997	AR64102		M	+/-	+ Cable	09/92 ▸	0060593572	**820315**	87	92	92	97	22X1.5	29	
3.0 i 24V,3.0 i V6 3.0 i V6 24V ▸ 0009746	*164/H1/K1*	E	2959	AR64305, AR64304, AR64307 AR66302, AR64306, AR66303 AR66301		M		+ Cable	09/92 ▸	0060593572	**820315**	87	92	92	97	22X1.5	29	
3.0 i V6,3.0 i V6 24V ▸ 0009746	*164/H1/K1*	E	2959	AR64306, AR66301, AR66303 AR64305, AR66302		A	+/-	+ Cable	09/92 ▸	0060593572	**820315**	87	92	92	97	22X1.5	29	
2.5 TD	*164/H2/K2*	D	2500	VM08B, VM32B		M	-		09/92 ▸ 09/98	0060506988	**819749**	75		85		22X1.5	29	
2.5 TD ▸ 0009746	*164/H2/K2*	D	2500	VM08B, VM32B		M	+	+ Cable	09/92 ▸	0060593573	**820232**	83	87	88	92	22X1.5	29	
Alfa 6																		
2.0 i V6	*119A3*	E	1996	AR01932		M			04/79 ▸ 1984	0060506988	**819749**	75		85		22X1.5	29	
2.5 i V6	*119/A/AA*	E	2492	AR01913, AR01928		M			04/79 ▸ 1987	0060506988	**819749**	75		85		22X1.5	29	

• **New** Nouveau **Nuevo** Novo **Nuovo** Nieuw **Neu** Yeni Новый Nou

			Type Ctr.		cc		AC			OE	Valeo	(°)C T1	T2	T3	T4	COD.	mm	
ALFA ROMEO (.../...)																			
Alfa 6 (.../...)																			
2.5 i V6	*119/07/A1/AB*	E		2492	AR01913, AR01928	A			04/79 ▸ 1987	0060506988	**819749**	75		85		22X1.5	29	
2.5 TD	*119A2*	D		2492	VM5HT/2.5	M			07/85 ▸ 1987	0060506988	**819749**	75		85		22X1.5	29	
Alfasud																			
1.2	*901/D4/D5*	E		1186	AS30104, AS30102	M			01/80 ▸	0060503687	**819744**	82		92		22X1.5	29	
1.2,1200	*901/A/A2/C/C3/D/D1/D2/D3 D4, 904/A/A1/A2/A3*	E		1186	AS30102, AS30100, AS30110 AS30104, AS30111	M			11/71 ▸	0060503687	**819744**	82		92		22X1.5	29	
1.3,1300	*901/F/G1, 904B, 902/A/A2*	E		1286	AS30180, AS30184, AS30190	M			09/76 ▸ 07/79	0060503687	**819744**	82		92		22X1.5	29	
1.35,1.35 i	*901/F3/G4*	E		1351	AS30164, AS30168	M			01/80 ▸	0060503687	**819744**	82		92		22X1.5	29	
1.35,1.35 i,1350	*901/F2/F3/G2/G4, 904B2 902/04/05*	E		1351	AS30164, AS30156, AS30160 AS30168	M			09/78 ▸	0060503687	**819744**	82		92		22X1.5	29	
1.5,1.5 i	*901/F4/G5*	E		1490	AS30124, AS30133, AS30128	M			01/80 ▸	0060503687	**819744**	82		92		22X1.5	29	
1.5,1.5 i,1500	*901/F1/F4/G1/G5, 902/02 03*	E		1490	AS30124, AS30146, AS30128 AS30198, AS30126, AS30133	M			12/78 ▸	0060503687	**819744**	82		92		22X1.5	29	
Alfetta																			
1.6,1600	*116/00/02/04/05/B1*	E		1570	AR01600	M			01/75 ▸ 1985	0060506988	**819749**	75		85		22X1.5	29	
1.8,1800	*116/09/10/11/42/54/B2*	E		1779	AR01608, AR01678	M			05/72 ▸ 1985	0060506988	**819749**	75		85		22X1.5	29	
2.0,2.0 i,2.0 ie,2000 2000 i	*116/15/29/36/37/55/56/58*	E		1962	AR01713, AR01655, AR01629 AR01623, AR01674, AR01615 AR01334	M			05/76 ▸ 1985	0060506988	**819749**	75		85		22X1.5	29	
2.0,2000 i	*116/55/63*	E		1962	AR01615, AR01655, AR01605	A			07/78 ▸ 06/81	0060506988	**819749**	75		85		22X1.5	29	
2.0 TD	*116/B/BA*	D		1995	VM4HT/2	M			04/79 ▸ 1985	0060506988	**819749**	75		85		22X1.5	29	
2.4 TD	*116B3*	D		2393	VM81A	M			07/82 ▸ 1985	0060506988	**819749**	75		85		22X1.5	29	
Arna																			
1.2	*920/A/AA*	E		1186	AR31000	M			09/83 ▸ 12/84	0060503687	**819744**	82		92		22X1.5	29	
1.2	*920/AB/AC*	E		1189	AR30500	M			11/84 ▸ 1987	0060503687	**819744**	82		92		22X1.5	29	
1.3	*920A1*	E		1351	AR30512, AR31006, AR31010	M			09/83 ▸ 1987	0060503687	**819744**	82		92		22X1.5	29	
1.5	*920*	E		-		M			09/83 ▸ 1987	0060503687	**819744**	82		92		22X1.5	29	
Giulietta																			
1.3	*116//44*	E		1357	AR01644	M			1976 ▸ 1986	0060506988	**819749**	75		85		22X1.5	29	
1.6	*11650, 113/48/49*	E		1570	AR01600	M			1976 ▸ 1986	0060506988	**819749**	75		85		22X1.5	29	
1.8,1800	*113/50/51, 116/A/AA/AB*	E		1779	AR01678	M			03/79 ▸ 1986	0060506988	**819749**	75		85		22X1.5	29	
2.0 Turbo,2.0 i,2000 i	*116A1, 113/56/62/63*	E		1962	AR01655, AR01699	M			08/79 ▸ 1986	0060506988	**819749**	75		85		22X1.5	29	
2.0 TD	*11352, 116A2*	D		1995	VM4HT/2	M			1981 ▸ 1986	0060506988	**819749**	75		85		22X1.5	29	
GTV																			
2.0,2.0 i	*113/17/18, 116/36/37/59 60*	E		1962	AR01655, AR06212, AR01623	M			12/80 ▸	0060506988	**819749**	75		85		22X1.5	29	
2.5 i V6	*113/15/16, 116/46/73/CA*	E		2492	AR01646, AR01911	M			12/80 ▸	0060506988	**819749**	75		85		22X1.5	29	
GTV (95>2003)																			
2.0 i Twin Spark 16V	*916C2*	E		1970	AR16201	M			03/95 ▸	46477717	**820031**	87	92	92	97	22X1.5	29	
2.0 V6 Turbo	*916C2*	E		1997	AR16202	M			03/95 ▸	46477717	**820031**	87	92	92	97	22X1.5	29	
3.0 i V6 24V	*916C1*	E		2959	AR16102	M			02/97 ▸	0060813343	**820031**	87	92	92	97	22X1.5	29	
GTV (2003>)																			
3.2 i V6 24V	*916CX*	E		3179	936A.000	M			03/03 ▸	46477717	**820031**	87	92	92	97	22X1.5	29	
RZ																			
3.0 i V6	*162D1*	E		2959	AR61501	M			09/92 ▸	60523385	**819749**	75		85		22X1.5	29	
Spider (71>93)																			
1.6	*115A2*	E		1570	AR01563	M			01/90 ▸ 1993	0060506988	**819749**	75		85		22X1.5	29	
2.0 i	*115A1, 915BS*	E		1962	AR01590, AR01588	M			06/89 ▸ 1993	0060506988	**819749**	75		85		22X1.5	29	
Spider (95>2003)																			
2.0 i Twin Spark 16V	*916S2*	E		1970	AR16201	M			02/95 ▸	46477717	**820031**	87	92	92	97	22X1.5	29	
3.0 i V6	*916S1*	E		2959	AR16199, AR16101	M			02/95 ▸	46477717	**820031**	87	92	92	97	22X1.5	29	
Sprint																			
1.35	*902A4*	E		1351	AS30168	M			01/80 ▸ 1988	0060503687	**819744**	82		92		22X1.5	29	

• **New** Nouveau **Nuevo** Novo **Nuovo** Nieuw **Neu** Yeni Новый Nou

		Type Ctr.		CC			AC			OE	Valeo	T1	T2	T3	T4	COD.	mm
ALFA ROMEO (.../...)																	
Sprint (.../...)																	
1.35	*902A4*	E	1351	AS30168	M			1984 ▸		0060503687	**819744**	82		92		22X1.5	29
1.5	*902A5*	E	1490	AS30133, AS30128	M			01/80 ▸ 1988		0060503687	**819744**	82		92		22X1.5	29
1.5,1500,1500 i	*902A5*	E	1490	AR30182, AR30146, AS30128 AR30520, AR30198, AS30126	M			07/79 ▸		0060503687	**819744**	82		92		22X1.5	29
1.7 i,1.7 ie	*902A6*	E	1712	AR30550, AR30558	M			04/88 ▸		0060503687	**819744**	82		92		22X1.5	29
SZ																	
3.0 i	*162C1*	E	2959	AR61501	M			03/89 ▸ 12/91		0060506988	**819749**	75		85		22X1.5	29
AUDI																	
80 (72>81)																	
1.3		E	1272	ZF, ZA	M			05/72 ▸ 08/76		823959481F	**819759**	87		92		22X1.5	29
1.3		E	1272	FZ, FY, ZA, ZF	M			09/76 ▸ 07/81		893959481	**820304**	90		95		22X1.5	29
1.5		E	1471	YJ, ZB, ZC	M			03/73 ▸ 08/75		823959481F	**819759**	87		92		22X1.5	29
1.6		E	1588	YT, XX, YN, YP, YS, FS	M			09/73 ▸ 08/76		823959481F	**819759**	87		92		22X1.5	29
1.6,1.6 i	*8112, 8122*	E	1588	YG, YP, WP, YZ, WY, YK, YT YH, FS, YY, YN, YS	M			09/76 ▸ 12/82		893959481	**820304**	90		95		22X1.5	29
1.6		E	1588	YT, YP, YN	A			09/75 ▸ 08/76		823959481F	**819759**	87		92		22X1.5	29
1.6,1.6 i		E	1588	YY, WY, YN, YP, WP, YH, YT WZ	A			09/76 ▸ 07/81		893959481	**820304**	90		95		22X1.5	29
1.7 i		E	1715	WT	M			08/80 ▸ 07/81		893959481	**820304**	90		95		22X1.5	29
2.2 i	*8132*	E	2144	WE	M			10/80 ▸ 07/81		893959481	**820304**	90		95		22X1.5	29
2.2 i	*8132*	E	2144	WE	A			10/80 ▸ 07/81		893959481	**820304**	90		95		22X1.5	29
80 (81>86)																	
1.3	*811/0/1, 813/0/1/2*	E	1297	EP	M			08/81 ▸ 03/87		893959481	**820304**	90		95		22X1.5	29
1.3	*811/0/1, 813/0/1*	E	1297	EP	M			08/85 ▸ 03/87		191959481C	**819769**	84	91	95	102	22X1.5	29
1.6	*8122, 811/1/2/B/C, 813/0/1/2/B/C 814/0/1/2/B/C*	E	1588	WV, YP, YZ, WY	M			08/81 ▸ 07/84		893959481	**820304**	90		95		22X1.5	29
1.6	*811/1/2, 813/0/1/2, 814/0/2*	E	1588	YP, WV	A			08/81 ▸ 07/83		893959481	**820304**	90		95		22X1.5	29
1.6,1.6 i	*811/0/1/2/G/H, 813/0/1/2 G/H/J/P, 814/0/1/2*	E	1595	DT, SA, JU, PP	M			08/81 ▸ 03/87		893959481	**820304**	90		95		22X1.5	29
1.6,1.6 i	*811/0/1/G/H, 8141, 813/0 1/2/G/H/J/P*	E	1595	DT, JU, SA, PP	M			06/84 ▸ 03/87		191959481C	**819769**	84	91	95	102	22X1.5	29
1.6,1.6 i	*811/0/1/G/H, 813/0/1/2/G H/J, 814/0/1*	E	1595	SA, JU, DT	A			08/83 ▸ 03/87		191959481C	**819769**	84	91	95	102	22X1.5	29
1.6,1.6 i	*811/0/1/2/G/H, 813/0/1/2 G/H/J, 814/0/1/2*	E	1595	JU, SA, DT	A			08/83 ▸ 03/87		893959481	**820304**	90		95		22X1.5	29
1.7 i	*8142, 813/1/2*	E	1715	WT	M			08/81 ▸ 07/83		893959481	**820304**	90		95		22X1.5	29
1.7 i	*8132, 8142*	E	1715	WT	A			08/82 ▸ 07/83		893959481	**820304**	90		95		22X1.5	29
1.8,1.8 i	*811/0/1/2/5/B/C/G/H/L 813/0/1/2/5/8/B/C/G/H/J L, 814/0/1/2/5/8/B/C*	E	1781	DS, JN, JV, PV, MU, DZ, SF NE	M			01/83 ▸ 03/87		893959481	**820304**	90		95		22X1.5	29
1.8,1.8 i	*811/0/1/5/G/H/L, 813/0/1 2/5/8/G/H/J/L, 814/0/1/5 8*	E	1781	DZ, NE, JV, PV, JN, DS, SF MU	M			08/83 ▸ 03/87		191959481C	**819769**	84	91	95	102	22X1.5	29
1.8,1.8 i	*811/1/2/G/H, 813/0/1/2/8 G/H/J, 814/0/1/2/8*	E	1781	JN, JV, SF, DS	A			08/81 ▸ 03/87		893959481	**820304**	90		95		22X1.5	29
1.8,1.8 i	*811/1/G/H, 813/0/1/2/8/G H/J, 814/0/1/2/8*	E	1781	JV, SF, JN, DS	A			06/84 ▸ 03/87		191959481C	**819769**	84	91	95	102	22X1.5	29
1.9	*8143, 813/2/3*	E	1921	WN	M			08/81 ▸ 07/83		893959481	**820304**	90		95		22X1.5	29
1.9	*8133, 8143*	E	1921	WN	A			08/81 ▸ 07/83		893959481	**820304**	90		95		22X1.5	29
1.9 ▸ 81-D-250 000	*8143, 813/2/3*	E	1921	WN	M			08/81 ▸ 07/83		035919369C	**819743**	84		94		22X1.5	29
1.9 ▸ 81-D-250 000	*8133, 8143*	E	1921	WN	A			08/81 ▸ 07/83		035919369C	**819743**	84		94		22X1.5	29
2.0 i	*8143, 813/1/3*	E	1994	HP, JS	M			08/82 ▸ 07/84		893959481	**820304**	90		95		22X1.5	29
2.0 i	*8130, 8140, 8532, 811/0*	E	1994	JS	M			08/83 ▸ 07/84		191959481B	**819743**	84		94		22X1.5	29
2.0 i	*813/1/2/3, 814/2/3*	E	1994	HP, JL, JS	A			08/82 ▸ 07/84		893959481	**820304**	90		95		22X1.5	29
2.2 i	*8142, 813/2/3*	E	2144	WE	M			08/81 ▸ 07/83		893959481	**820304**	90		95		22X1.5	29
2.2,2.2 i	*853/2/6*	E	2144	KK, KL	M			08/82 ▸ 07/84		191959481B	**819743**	84		94		22X1.5	29
2.2 i	*8142, 813/2/3*	E	2144	WE	A			08/81 ▸ 07/83		893959481	**820304**	90		95		22X1.5	29

• **New** Nouveau **Nuevo** Novo **Nuovo** Nieuw **Neu** Yeni Новый Nou

Valeo

Thermoswitch
Thermocontact
Termocontacto
Termocontato
Termocontatto
Thermokontakt
Thermoschalter

Włącznik wentylatora
Tepelný spínač
Termokapcsoló
Termocontact
Fan müşiri
ТЕРМОДАТЧИК

		Type Ctr.		cc		AC			OE	Valeo	(°)C T1	T2	T3	T4	COD.	mm	
AUDI (.../...)																	
80 (81>86) (.../...)																	
1.6 D,1.6 TD	*811/0/1/2, 813/0/1/2/3 814/0/1/2*	D	1588	CR, JK, CY	M			08/81 ▸ 03/87	893959481	**820304**	90		95		22X1.5	29	
1.6 D,1.6 TD	*811/1, 813/0/1/2, 814/0/1*	D	1588	JK, CY	M			08/85 ▸ 03/87	191959481C	**819769**	84	91	95	102	22X1.5	29	
1.6 D	*811/0/1/2, 813/0/1/2*	D	1588	CR, JK	A			08/81 ▸ 03/87	893959481	**820304**	90		95		22X1.5	29	
1.6 D	*813/0/1/2*	D	1588	JK	A			08/85 ▸ 03/87	191959481C	**819769**	84	91	95	102	22X1.5	29	
80 (86>91)																	
1.4	*8930*	E	1405	SE	M			09/86 ▸ 07/88	893959481	**820304**	90		95		22X1.5	29	
1.6,1.6 i	*8940, 8A20, 893/0*	E	1595	RN, RNA, ABB, PP	M			09/86 ▸ 08/91	893959481	**820304**	90		95		22X1.5	29	
1.6,1.6 i	*8A20*	E	1595	ABB, RN	A			08/89 ▸ 08/91	893959481	**820304**	90		95		22X1.5	29	
1.8,1.8 i	*8940, 8A20, 893/0/0*	E	1781	PM, DZ, JN, NE, RU, SF, JV	M			09/86 ▸ 09/91	893959481	**820304**	90		95		22X1.5	29	
1.8,1.8 i	*8940, 8A20, 893/0*	E	1781	PM, DZ, SF, NE, JN	M			09/86 ▸ 09/91	191959481C	**819769**	84	91	95	102	22X1.5	29	
1.8,1.8 i	*8940, 8A20, 893/0/0*	E	1781	JV, NE, SF, PM, JN, RU	A			09/86 ▸ 08/91	893959481	**820304**	90		95		22X1.5	29	
1.9 i	*8948, 893/0/1*	E	1857	SD	M			08/86 ▸ 07/89	893959481	**820304**	90		95		22X1.5	29	
1.9 i	*8948, 893/0/1*	E	1857	SD	M			09/86 ▸ 07/88	191959481C	**819769**	84	91	95	102	22X1.5	29	
1.9 i	*893/0/1, 894/1/8*	E	1857	SD	A			08/86 ▸ 07/89	893959481	**820304**	90		95		22X1.5	29	
2.0 i,2.0 i 16V	*8948, 8A20, 893/0/1*	E	1984	3A, AAD, 6A	M			08/88 ▸ 09/91	191959481C	**819769**	84	91	95	102	22X1.5	29	
2.0 i,2.0 i 16V	*8948, 8A20, 893/0/1/8*	E	1984	3A, AAD, 6A	M			08/88 ▸ 09/91	893959481	**820304**	90		95		22X1.5	29	
2.0 i	*8A20, 893/0/1/8*	E	1984	AAD, 3A	A			08/88 ▸ 08/91	893959481	**820304**	90		95		22X1.5	29	
1.6 D,1.6 TD	*8940, 8A20, 893/0*	D	1588	RA, JK, SB	M			02/87 ▸ 08/91	893959481	**820304**	90		95		22X1.5	29	
1.9 D	*8A20*	D	1896	1Y	M			08/89 ▸ 08/91	893959481	**820304**	90		95		22X1.5	29	
80 (91>95)																	
1.6 i	*8C20, 8C50*	E	1595	ABM, ABB, ADA	M			01/92 ▸ 07/95	191959481C	**819769**	84	91	95	102	22X1.5	29	
1.6 i	*8C20, 8C50*	E	1595	ADA, ABM, ABB	M			01/92 ▸ 07/95	893959481	**820304**	90		95		22X1.5	29	
2.0 E,2.0 E 16V,2.0 S 2.0 i 16V	*8C20, 8C50*	E	1984	ABT, ABK, ACE, ADW, 6A	M			09/91 ▸ 07/95	893959481	**820304**	90		95		22X1.5	29	
2.0 E,2.0 E 16V,2.0 S 2.0 i 16V	*8C20, 8C50*	E	1984	ACE, 6A, ABK, ADW, ABT	M			09/91 ▸ 07/95	191959481C	**819769**	84	91	95	102	22X1.5	29	
2.0 E,2.0 S	*8C20, 8C50*	E	1984	ABK, ABT, ADW	A			09/91 ▸ 07/95	191959481C	**819769**	84	91	95	102	22X1.5	29	
2.0 E,2.0 S	*8C20, 8C50*	E	1984	ABK, ABT, ADW	A			09/91 ▸ 07/95	893959481	**820304**	90		95		22X1.5	29	
2.2 i Turbo 20V	*8C27, 8C57*	E	2226	ABY	M			02/93 ▸ 06/95	191959481C	**819769**	84	91	95	102	22X1.5	29	
2.2 i Turbo 20V	*8C27, 8C57*	E	2226	ABY	M			02/93 ▸ 06/95	893959481	**820304**	90		95		22X1.5	29	
2.3 E	*8C27, 8C57*	E	2309	NG	M			09/91 ▸ 06/95	893959481	**820304**	90		95		22X1.5	29	
2.3 E	*8C27, 8C57*	E	2309	NG	M			09/91 ▸ 06/95	191959481C	**819769**	84	91	95	102	22X1.5	29	
2.3 E	*8C27*	E	2309	NG	A			09/91 ▸ 06/95	893959481	**820304**	90		95		22X1.5	29	
2.3 E	*8C27*	E	2309	NG	A			09/91 ▸ 06/95	191959481C	**819769**	84	91	95	102	22X1.5	29	
2.6 E V6	*8C27, 8C57*	E	2598	ABC, ACZ	M			07/92 ▸ 07/95	191959481C	**819769**	84	91	95	102	22X1.5	29	
2.6 E V6	*8C27, 8C57*	E	2598	ACZ, ABC	M			07/92 ▸ 07/95	893959481	**820304**	90		95		22X1.5	29	
2.6 E V6	*8C27, 8C57*	E	2598	ABC, ACZ	A			08/92 ▸ 07/95	893959481	**820304**	90		95		22X1.5	29	
2.6 E V6	*8C27, 8C57*	E	2598	ACZ, ABC	A			08/92 ▸ 07/95	191959481C	**819769**	84	91	95	102	22X1.5	29	
2.8 i V6	*8C27, 8C57*	E	2771	AAH	M			09/91 ▸ 07/95	191959481C	**819769**	84	91	95	102	22X1.5	29	
2.8 i V6	*8C27, 8C57*	E	2771	AAH	M			09/91 ▸ 07/95	893959481	**820304**	90		95		22X1.5	29	
2.8 i V6	*8C27, 8C57*	E	2771	AAH	A			09/91 ▸ 07/95	191959481C	**819769**	84	91	95	102	22X1.5	29	
2.8 i V6	*8C27, 8C57*	E	2771	AAH	A			09/91 ▸ 07/95	893959481	**820304**	90		95		22X1.5	29	
1.9 TD,1.9 TDi	*8C20, 8C50*	D	1896	AAZ, 1Z	M			09/91 ▸ 07/95	893959481	**820304**	90		95		22X1.5	29	
1.9 TD,1.9 TDi	*8C20, 8C50*	D	1896	1Z, AAZ	M			09/91 ▸ 07/95	191959481C	**819769**	84	91	95	102	22X1.5	29	
1.9 TD,1.9 TDi	*8C20, 8C50*	D	1896	1Z, AAZ	A			09/91 ▸ 07/95	893959481	**820304**	90		95		22X1.5	29	
1.9 TD,1.9 TDi	*8C20, 8C50*	D	1896	1Z, AAZ	A			09/91 ▸ 07/95	191959481C	**819769**	84	91	95	102	22X1.5	29	
90 (84>87)																	
1.8 i	*8137*	E	1781	JN	A			06/84 ▸ 07/86	191959481C	**819769**	84	91	95	102	22X1.5	29	
1.8 i	*8137*	E	1781	JN	A			06/84 ▸ 07/86	893959481	**820304**	90		95		22X1.5	29	
2.0 i	*8137, 8147*	E	1994	HP, JS	M			10/84 ▸ 07/86	191959481C	**819769**	84	91	95	102	22X1.5	29	
2.0 i	*8137, 8147*	E	1994	HP, JS	M			10/84 ▸ 07/86	893959481	**820304**	90		95		22X1.5	29	
2.0 i	*8137, 8147*	E	1994	JS, JL, HP	A			10/84 ▸ 07/86	191959481C	**819769**	84	91	95	102	22X1.5	29	
2.0 i	*8137, 8147*	E	1994	JS, JL, HP	A			10/84 ▸ 07/86	893959481	**820304**	90		95		22X1.5	29	
2.2 i	*8147, 813/7, 853/2/6/7/K*	E	2226	JT, HY, KV	M			08/84 ▸ 03/87	191959481C	**819769**	84	91	95	102	22X1.5	29	
2.2 i	*8147, 813/7, 853/2/6/7/K*	E	2226	KV, HY, JT	M			08/84 ▸ 03/87	893959481	**820304**	90		95		22X1.5	29	
2.2 i	*8137, 8147*	E	2226	HY, KV	A			06/84 ▸ 07/86	191959481C	**819769**	84	91	95	102	22X1.5	29	
2.2 i	*8137, 8147*	E	2226	HY, KV	A			06/84 ▸ 07/86	893959481	**820304**	90		95		22X1.5	29	
90 (87>91)																	
1.8 i	*8A27*	E	1781	DZ	M			08/89 ▸ 12/91	893959481	**820304**	90		95		22X1.5	29	

• **New** Nouveau **Nuevo** Novo **Nuovo** Nieuw **Neu** Yeni Новый Nou

AUDI (.../...)

90 (87>91) (.../...)

1.8 i	*8A27*	E	1781	DZ	M			08/89 ▸ 12/91	191959481C	**819769**	84	91	95	102	22X1.5	29
2.0 i,2.0 i 20V	*8947, 8A27, 893/2/7*	E	1994	PS, NM	M			04/87 ▸ 12/91	191959481C	**819769**	84	91	95	102	22X1.5	29
2.0 i,2.0 i 20V	*8947, 8A27, 893/2/7*	E	1994	PS, NM	M			04/87 ▸ 12/91	893959481	**820304**	90		95		22X1.5	29
2.0 i	*8937, 8947*	E	1994	PS	A			08/87 ▸ 07/89	191959481C	**819769**	84	91	95	102	22X1.5	29
2.0 i	*8937, 8947*	E	1994	PS	A			08/87 ▸ 07/89	893959481	**820304**	90		95		22X1.5	29
2.2 i	*8947, 8A27, 893/7*	E	2226	KV	M			04/87 ▸ 12/91	191959481C	**819769**	84	91	95	102	22X1.5	29
2.2 i	*8947, 8A27, 893/7*	E	2226	KV	M			04/87 ▸ 12/91	893959481	**820304**	90		95		22X1.5	29
2.3 i,2.3 i 20V	*894A, 8A27, 893/2/7*	E	2309	7A, NG	M			04/87 ▸ 12/91	191959481C	**819769**	84	91	95	102	22X1.5	29
2.3 i,2.3 i 20V	*894A, 8A27, 893/2/7*	E	2309	7A, NG	M			04/87 ▸ 12/91	893959481	**820304**	90		95		22X1.5	29
2.3 i,2.3 i 20V	*893/2/7, 8A27, 894/2/7/A*	E	2309	7A, NG	A			08/87 ▸ 1992	191959481C	**819769**	84	91	95	102	22X1.5	29
2.3 i,2.3 i 20V	*893/2/7, 8A27, 894/2/7/A*	E	2309	NG, 7A	A			08/87 ▸ 1992	893959481	**820304**	90		95		22X1.5	29
1.6 TD	*8937, 8A27*	D	1588	RA, SB	M			04/88 ▸ 12/91	893959481	**820304**	90		95		22X1.5	29
1.6 TD	*8937, 8A27*	D	1588	RA, SB	M			04/88 ▸ 12/91	191959481C	**819769**	84	91	95	102	22X1.5	29

100 (71>82)

1.6 4392000 001 ▸ 4382300000	*431/0/1, 432/0/1, 433/0/1/2/B/C/T 434/0/1/2/B/C, 435/1/2, 8050, 8070,436/1/2*	E	1588	YM, YV	M			08/74 ▸ 07/82	823959481F	**819759**	87		92		22X1.5	29
1.6 4392000 001 ▸ 4382300000	*431/0/1, 432/0/1, 433/0/1/2/T, 434 0/1, 435/1/2, 436/1/2*	E	1588	YV	A			08/76 ▸ 07/82	823959481F	**819759**	87		92		22X1.5	29
1.8 ▸ 4382300000		E	1760	ZZ, ZU	M			08/71 ▸ 05/76	823959481F	**819759**	87		92		22X1.5	29
1.8 ▸ 4382300000		E	1760	ZZ	A			08/74 ▸ 05/76	823959481F	**819759**	87		92		22X1.5	29
1.9 ▸ 4382300000		E	1871	ZJ	M			08/74 ▸ 05/76	823959481F	**819759**	87		92		22X1.5	29
1.9 ▸ 4382300000		E	1871	ZX, ZJ, ZN	A			08/71 ▸ 05/76	823959481F	**819759**	87		92		22X1.5	29
1.9 4392000 001 ▸	*431/0/1, 433/0/1/2/6/T, 434/0/1/2 4362, 4451, 435/1/2*	E	1921	WH	M			08/79 ▸ 07/82	823959481F	**819759**	87		92		22X1.5	29
2.0 ▸ 4382300000	*431/0/1, 432/0/1, 433/0/1/2, 434/0 1/2, 435/1/2, 436/1/2*	E	1984	WA	M			06/76 ▸ 07/78	823959481F	**819759**	87		92		22X1.5	29
2.0 ▸ 4382300000	*431/0/1, 432/0/1, 433/0/1/2, 434/0 1/2, 435/1/2, 436/1/2*	E	1984	WA, WF	A			06/76 ▸ 07/78	823959481F	**819759**	87		92		22X1.5	29
2.1,2.2,2.2 i 4392000 001 ▸ 4382300000	*431/0/1, 432/0/1, 433/0/1 2/6/T, 434/0/1/2/6, 435/1 2/6, 436/1/2/6*	E	2144	WG, WE, WB, WC	M			06/76 ▸ 07/82	823959481F	**819759**	87		92		22X1.5	29
2.1,2.2,2.2 i 4392000 001 ▸ 4382300000	*431/0/1, 432/0/1, 433/0/1 2/6/T, 434/0/1/2/6, 435/1 2/6, 436/1/2/6*	E	2144	WC, WB, WG, WE	A			06/76 ▸ 07/82	823959481F	**819759**	87		92		22X1.5	29
2.0 D,2.0 TD 4392000 001 ▸	*431/1, 433/0/1/2/6/T, 435 1/2/6*	D	1986	DE, CN	A			10/78 ▸ 07/82	823959481F	**819759**	87		92		22X1.5	29
2.0 D,2.0 TD 4392000 001 ▸ 4382300000	*431/0/1, 433/0/1/2/6/T 434/0/1/2/6, 435/1/2/6 436/1/2/6*	D	1986	CN, DE	M			06/76 ▸ 07/82	823959481F	**819759**	87		92		22X1.5	29

100 (82>90)

1.8,1.8 i	*443/0/1/2/3/6/C/G/J/K/P 444/0/1/2/6, 445/0/1/2/6 G/J/K/P, 446/2/6*	E	1781	PH, JW, RS, NP, DS, DR, SH 4B	M			08/82 ▸ 12/90	893959481	**820304**	90		95		22X1.5	29
1.8,1.8 i	*443/0/1/2/3/6/C/G/J/K/P 444/0/1/2/6, 445/0/1/2/6 G/J/K/P, 446/2/6*	E	1781	DS, SH, DR, JW, PH, RS, 4B NP	M			08/82 ▸ 12/90	191959481C	**819769**	84	91	95	102	22X1.5	29
1.8,1.8 i	*443/0/1/2/6/G/J/K/P, 444 0/1/2/6/P, 445/0/1/2/6/G J/K/P, 446/2/6/P*	E	1781	DR, SH, DS, PH, 4B, JW	A			08/82 ▸ 07/90	191959481C	**819769**	84	91	95	102	22X1.5	29
1.8,1.8 i	*443/0/1/2/6/G/J/K/P, 444 0/1/2/6/P, 445/0/1/2/6/G J/K/P, 446/2/6/P*	E	1781	DR, SH, PH, DS, 4B, JW	A			08/82 ▸ 07/90	893959481	**820304**	90		95		22X1.5	29
1.9	*443/0/1/2/6, 444/0/1/6, 4462, 445/0 2*	E	1921	WH	M			08/82 ▸ 07/84	191959481C	**819769**	84	91	95	102	22X1.5	29
1.9	*443/0/1/2/6, 444/0/1/6, 4462, 445/0 2*	E	1921	WH	M			08/82 ▸ 07/84	893959481	**820304**	90		95		22X1.5	29
1.9	*443/0/1/2/6, 4452, 4462, 444/0/1/6*	E	1921	WH	A			08/82 ▸ 07/84	191959481C	**819769**	84	91	95	102	22X1.5	29

• **New** Nouveau **Nuevo** Novo **Nuovo** Nieuw **Neu** Yeni Новый Nou

			Type Ctr.		cc			AC			OE	Valeo	(°)C T1	T2	T3	T4	COD.	mm	
AUDI (.../...)																			
100 (82>90) (.../...)																			
1.9	*443/0/1/2/6, 4452, 4462, 444/0/1/6*	E		1921	WH	A			08/82 ▸ 07/84	893959481	**820304**	90		95		22X1.5	29	
2.0 i	*443/0/2/6/G/J/K/P, 444/2/6/P, 445/0 2/6/G/J/K/P, 446/2/P*	E		1994	KP, RT, SL	M			08/84 ▸ 12/90	191959481C	**819769**	84	91	95	102	22X1.5	29	
2.0 i	*443/0/2/6/G/J/K/P, 444/2/6/P, 445/0 2/6/G/J/K/P, 446/2/P*	E		1994	KP, SL, RT	M			08/84 ▸ 12/90	893959481	**820304**	90		95		22X1.5	29	
2.0 i	*443/0/2/6/G/J/K/P, 444/2/6/A/P, 445 0/2/6/G/J/K/P, 446/2/P*	E		1994	RT, SL, KP	A			08/84 ▸ 12/90	191959481C	**819769**	84	91	95	102	22X1.5	29	
2.0 i	*443/0/2/6/G/J/K/P, 444/2/6/A/P, 445 0/2/6/G/J/K/P, 446/2/P*	E		1994	SL, RT, KP	A			08/84 ▸ 12/90	893959481	**820304**	90		95		22X1.5	29	
2.2,2.2 i	*443/0/1/2/6, 444/2/6, 445 0/1/2/5/6, 446/5/6*	E		2144	WC, WB	M			08/82 ▸ 07/90	893959481	**820304**	90		95		22X1.5	29	
2.2,2.2 i	*443/0/1/2/6, 444/2/6, 445 0/1/2/5/6, 446/5/6*	E		2144	WC, WB	M			08/82 ▸ 07/90	191959481C	**819769**	84	91	95	102	22X1.5	29	
2.2,2.2 i	*4442, 443/0/1/2/6, 445/0 1/2/5/6, 446/5/6*	E		2144	WC, WB	A			08/82 ▸ 07/90	191959481C	**819769**	84	91	95	102	22X1.5	29	
2.2,2.2 i	*4442, 443/0/1/2/6, 445/0 1/2/5/6, 446/5/6*	E		2144	WB, WC	A			08/82 ▸ 07/90	893959481	**820304**	90		95		22X1.5	29	
2.2	*443C*	E		2200	PR	M			08/89 ▸ 12/90	893959481	**820304**	90		95		22X1.5	29	
2.2	*443C*	E		2200	PR	M			08/89 ▸ 12/90	191959481C	**819769**	84	91	95	102	22X1.5	29	
2.2	*443C*	E		2200	PR	A			08/89 ▸ 12/90	191959481C	**819769**	84	91	95	102	22X1.5	29	
2.2	*443C*	E		2200	PR	A			08/89 ▸ 12/90	893959481	**820304**	90		95		22X1.5	29	
2.2,2.2 Turbo,2.2 i 2.2 i Turbo	*443/0/1/2/3/5/6/D/G/H/J/K P/R, 444/5/6/8/D/H/P/R 445/0/2/5/6/D/G/H/J/K/P 446/5/6/8/D/H/P*	E		2226	KZ, MC, KF, HX, KU, WU, PX	M			08/82 ▸ 12/90	191959481C	**819769**	84	91	95	102	22X1.5	29	
2.2,2.2 Turbo,2.2 i 2.2 i Turbo	*443/0/1/2/3/5/6/D/G/H/J/K P/R, 444/5/6/8/D/H/P/R 445/0/2/5/6/D/G/H/J/K/P 446/5/6/8/D/H/P*	E		2226	MC, HX, KU, WU, KF, KZ, PX	M			08/82 ▸ 12/90	893959481	**820304**	90		95		22X1.5	29	
2.2,2.2 Turbo,2.2 i 2.2 i Turbo	*443/0/1/2/5/6/7/8/B/D/G/H J/K/P/R, 444/2/5/6/7/8/B D/H/P/R, 445/0/2/5/6/7/D G/H/J/K/P, 446/6/8/B/H/P*	E		2226	HX, KU, KZ, KF, MC, WU	A			08/82 ▸ 12/90	191959481C	**819769**	84	91	95	102	22X1.5	29	
2.2,2.2 Turbo,2.2 i 2.2 i Turbo	*443/0/1/2/5/6/7/8/B/D/G/H J/K/P/R, 444/2/5/6/7/8/B D/H/P/R, 445/0/2/5/6/7/D G/H/J/K/P, 446/6/8/B/H/P*	E		2226	MC, HX, KF, KU, KZ, WU	A			08/82 ▸ 12/90	893959481	**820304**	90		95		22X1.5	29	
2.3 i	*443/G/H/J/K/M/P/R/U, 444/5/8/M/P 445/G/H/J/K/M/P/U, 446/8/M/P*	E		2309	NF	M			08/86 ▸ 12/90	191959481C	**819769**	84	91	95	102	22X1.5	29	
2.3 i	*443/G/H/J/K/M/P/R/U, 444/5/8/M/P 445/G/H/J/K/M/P/U, 446/8/M/P*	E		2309	NF	M			08/86 ▸ 12/90	893959481	**820304**	90		95		22X1.5	29	
2.3 i	*443/2/7/B/G/H/J/K/M/P/R/S/U, 444/2 5/7/8/B/M/N/P/S, 445/8/B/G/H/J/K/M P/U, 446/8/B/M/P*	E		2309	NF	A			08/86 ▸ 12/90	893959481	**820304**	90		95		22X1.5	29	
2.3 i	*443/2/7/B/G/H/J/K/M/P/R/S/U, 444/2 5/7/8/B/M/N/P/S, 445/8/B/G/H/J/K/M P/U, 446/8/B/M/P*	E		2309	NF	A			08/86 ▸ 12/90	191959481C	**819769**	84	91	95	102	22X1.5	29	
2.0 D,2.0 TD	*443/0/1/2/6/P, 444/0/1/2 P, 445/0/1/2/6/P, 446/2/P*	D		1986	DE, CN, NC	M			08/82 ▸ 12/90	893959481	**820304**	90		95		22X1.5	29	
2.0 D,2.0 TD	*443/0/1/2/6/P, 444/0/1/2 P, 445/0/1/2/6/P, 446/2/P*	D		1986	DE, CN, NC	M			08/82 ▸ 12/90	191959481C	**819769**	84	91	95	102	22X1.5	29	
2.0 D,2.0 TD	*443/0/1/2/6/P, 444/0/1/2 4462, 445/0/1/2/6/P*	D		1986	DE, CN, NC	A			08/82 ▸ 07/89	191959481C	**819769**	84	91	95	102	22X1.5	29	
2.0 D,2.0 TD	*443/0/1/2/6/P, 444/0/1/2 4462, 445/0/1/2/6/P*	D		1986	CN, DE, NC	A			08/82 ▸ 07/89	893959481	**820304**	90		95		22X1.5	29	
2.4 D	*443P, 445P*	D		2370	3D	M			08/89 ▸ 12/90	191959481C	**819769**	84	91	95	102	22X1.5	29	
2.4 D	*443P, 445P*	D		2370	3D	M			08/89 ▸ 12/90	893959481	**820304**	90		95		22X1.5	29	
2.5 TDi	*443P, 445P*	D		2460	1T	M			01/90 ▸ 12/90	191959481C	**819769**	84	91	95	102	22X1.5	29	
2.5 TDi	*443P, 445P*	D		2460	1T	M			01/90 ▸ 12/90	893959481	**820304**	90		95		22X1.5	29	
100 (90>94)																			
1.6,1.6 i	*4A20, 4A50*	E		1595	ADA, ABB	M			03/92 ▸ 07/94	191959481C	**819769**	84	91	95	102	22X1.5	29	
2.0 16V,2.0 i,2.0 i 16V	*4A20, 4A50*	E		1984	ACE, AAE, ABK, AAD, ADW	M			12/90 ▸ 07/94	191959481C	**819769**	84	91	95	102	22X1.5	29	
2.0 i	*4A20, 4A50*	E		1984	AAD, AAE, ADW, ABK	A			12/90 ▸ 07/94	191959481C	**819769**	84	91	95	102	22X1.5	29	

• **New** Nouveau **Nuevo** Novo **Nuovo** Nieuw **Neu** Yeni Новый Nou

		Type Ctr.		CC			AC			OE	Valeo	(°)C T1	T2	T3	T4	COD.	mm	
AUDI (.../...)																		
100 (90>94) (.../...)																		
2.2 i Turbo 20V	*4A28, 4A58*	E	2226	AAN		M	+		08/91 ▸ 07/94	191959481C	**819769**	84	91	95	102	22X1.5	29	
2.2 i Turbo 20V	*4A28, 4A58*	E	2226	AAN		A	+		08/91 ▸ 07/94	191959481C	**819769**	84	91	95	102	22X1.5	29	
2.3 i	*4A20, 4A50*	E	2309	AAR		M	+/-		12/90 ▸ 07/94	191959481C	**819769**	84	91	95	102	22X1.5	29	
2.3 i	*4A20, 4A50*	E	2309	AAR		A			12/90 ▸ 07/94	191959481C	**819769**	84	91	95	102	22X1.5	29	
2.6 V6,2.6 i V6	*4A2/0/7, 4A5/0/7*	E	2598	ACZ, ABC		M			03/92 ▸ 07/94	191959481C	**819769**	84	91	95	102	22X1.5	29	
2.6 V6,2.6 i V6	*4A2/0/7, 4A5/0/7*	E	2598	ABC, ACZ		A			04/92 ▸ 07/94	191959481C	**819769**	84	91	95	102	22X1.5	29	
2.8 i V6	*4A50, 4A2/0/7*	E	2771	AAH		M			12/90 ▸ 07/94	191959481C	**819769**	84	91	95	102	22X1.5	29	
2.8 i V6	*4A20, 4A50*	E	2771	AAH		A			12/90 ▸ 07/94	191959481C	**819769**	84	91	95	102	22X1.5	29	
4.2 i V8 32V	*4A28, 4A58*	E	4172	ABH		M			10/92 ▸ 07/94	191959481C	**819769**	84	91	95	102	22X1.5	29	
2.4 D	*4A20, 4A50*	D	2370	AAS		M			05/91 ▸ 07/94	191959481C	**819769**	84	91	95	102	22X1.5	29	
2.4 D	*4A20*	D	2370	AAS		A			12/90 ▸ 07/91	191959481C	**819769**	84	91	95	102	22X1.5	29	
2.5 TDi	*4A20, 4A50*	D	2460	ABP, AAT		M			06/91 ▸ 07/94	191959481C	**819769**	84	91	95	102	22X1.5	29	
2.5 TDi	*4A20, 4A50*	D	2460	AAT		A			01/93 ▸ 07/94	191959481C	**819769**	84	91	95	102	22X1.5	29	
200																		
2.1,2.1 Turbo	*4382, 437/2, 447/1/6, 448 1/6*	E	2144	WC, JY, KG, WJ, WK		M			10/79 ▸ 01/88	191959481C	**819769**	84	91	95	102	22X1.5	29	
2.1 Turbo	*447/1/6, 448/1/6*	E	2144	JY, KG		M			10/84 ▸ 01/88	893959481	**820304**	90		95		22X1.5	29	
2.1,2.1 Turbo	*4382, 437/2/5, 4481, 447 1/4/G*	E	2144	WJ, JY, WC, KG, WS, WK, KJ KH		A			10/79 ▸ 01/88	191959481C	**819769**	84	91	95	102	22X1.5	29	
2.1 Turbo	*4481, 447/1/4*	E	2144	KG, JY		A			08/85 ▸ 01/88	893959481	**820304**	90		95		22X1.5	29	
2.2,2.2 Turbo	*447/1/4/B/D/G/H/J/P/R/S 448/1/D/P*	E	2226	MC, KU, 1B		M			08/84 ▸ 12/90	191959481C	**819769**	84	91	95	102	22X1.5	29	
2.2 Turbo	*447/4/G/H*	E	2226	MC		M			01/85 ▸ 01/88	893959481	**820304**	90		95		22X1.5	29	
2.2,2.2 Turbo	*447/1/4/B/G/J/P, 448/1/9 M/P*	E	2226	MC, 2B, KU		A			08/84 ▸ 12/90	191959481C	**819769**	84	91	95	102	22X1.5	29	
2.2 Turbo	*4489, 447/4/G*	E	2226	MC		A			08/85 ▸ 01/88	893959481	**820304**	90		95		22X1.5	29	
2.3 Turbo 20V	*445D, 447P*	E	2309	3B		M			08/88 ▸ 12/90	191959481C	**819769**	84	91	95	102	22X1.5	29	
A2																		
1.4 i 16V	*8Z00*	E	1390	AUA, BBY		M	+		06/00 ▸	8D0959481B	**820305**	90	97	95	102	2		
1.6 FSI 16V	*8Z00*	E	1595	BAD		M	+		05/02 ▸ 08/05	8D0959481B	**820305**	90	97	95	102	14X1.5	22	
1.2 TDi	*8Z0/D/E*	D	1191	ANY		M	+		04/01 ▸	8D0959481B	**820305**	90	97	95	102	2		
1.4 TDi	*8Z00*	D	1422	AMF, ATL		M	+/-		06/00 ▸	8D0959481B	**820305**	90	97	95	102	2		
A3 (96>2003)																		
1.6 i ▸ 8L-X-062 000	*8L1B, 8L1H, 8L10, 8L1A, 8L1C*	E	1595	AEH,AKL		M	+		09/96 ▸ 02/99	191919369A	●**820833**			120		20		
1.6 i	*8L1/0/A/B/C/H*	E	1595	AEH,AKL,AVU,BFQ		M			09/96 ▸ 06/03	1J0959481	**820302**	90		95		22X1.5	29	
1.6 i	*8L1/0/A/B/C/H*	E	1595	AEH,AKL,AVU,BFQ		A			09/96 ▸ 06/03	1J0959481	**820302**	90		95		22X1.5	29	
1.6 i ▸ 8L-X-062 000	*8L1A, 8L10, 8L1B, 8L1H, 8L1C*	E	1595	AEH,AKL		A	+		09/96 ▸ 02/99	191919369A	●**820833**			120		20		
1.8 i 20V,1.8 i Turbo 20V ▸ 8L-X-200 000	*8L1B, 8L1A, 8L1C, 8L1H 8L10*	E	1781	AGN,AGU,AJQ,APG,AQA,ARX,ARY AUM,AUQ		A	+		09/96 ▸ 06/03	191919369A	●**820833**			120		20		
1.8 i 20V,1.8 i Turbo 20V ▸ 8L-X-200 000	*8L1A, 8L1H, 8L1B, 8L1C 8L10*	E	1781	AGN,AGU,AJQ,APG,AQA,ARX,ARY AUM,AUQ		M	+		09/96 ▸ 06/03	191919369A	●**820833**			120		20		
1.8 i 20V,1.8 i Turbo 20V	*8L1/0/A/B/C/H*	E	1781	AGN,AGU,APG,APP,AQA,ARX,ARY ARZ,AUM,AUQ		M			09/96 ▸ 06/03	1J0959481	**820302**	90		95		22X1.5	29	
1.8 i 20V,1.8 i Turbo 20V	*8L1/0/A/B/C/H*	E	1781	AGN,AGU,APG,AQA,ARX,ARY,ARZ AUM,AUQ		A			09/96 ▸ 06/03	1J0959481	**820302**	90		95		22X1.5	29	
1.9 TDi ▸ 8L-X-200 000	*8L1A, 8L1B, 8L10, 8L1C*	D	1896	AHF,ALH,ASV		A	+		03/97 ▸ 06/01	191919369A	●**820833**			120		20		
1.9 TDi ▸ 8L-X-200 000	*8L10, 8L1A, 8L1H, 8L1B 8L1C*	D	1896	AGR		A			09/96 ▸ 06/99	191919369A	●**820833**			120		20		
1.9 TDi ▸ 8L-X-200 000	*8L1H, 8L1B, 8L1A, 8L1C 8L10*	D	1896	AGR		M			09/96 ▸ 06/99	191919369A	●**820833**			120		20		
1.9 TDi ▸ 8L-X-200 000	*8L1A, 8L1C, 8L1B, 8L10*	D	1896	AHF,ALH,ASV		M	+		03/97 ▸ 04/02	191919369A	●**820833**			120		20		
1.9 TDi	*8L1/0/A/B/C/H*	D	1896	AGR,AHF,ALH,ASV,ASZ,ATD,AXR		M			09/96 ▸ 06/03	1J0959481	**820302**	90		95		22X1.5	29	
1.9 TDi	*8L1/0/A/B/C/H*	D	1896	AGR,AHF,ALH,ASV,ASZ,ATD		A			09/96 ▸ 06/03	1J0959481	**820302**	90		95		22X1.5	29	
A3 (2008>)																		
1.4 TFSi 16V	*8P1/A/B/C, 8PA/A/B/C*	E	1390	CAXC		M	-		07/08 ▸	1J0959481A	●**820831**	85		90		22X1.5	29	
1.4 TFSi 16V	*8P1/A/B/C, 8PA/A/B/C*	E	1390	CAXC		A	-		07/08 ▸	1J0959481A	●**820831**	85		90		22X1.5	29	

• **New** Nouveau **Nuevo** Novo **Nuovo** Nieuw **Neu** Yeni Новый Nou

			Type Ctr.		cc			AC			OE	Valeo	(°)C T1	T2	T3	T4	COD.	mm	
AUDI (.../...)																				
A3 (2008>) (.../...)																				
1.6 i	*8P1/A/B/C, 8PA/A/B/C*	E		1595	BSE,BSF,CCSA	M			07/08 ▸	1J0959481A	●820831	85		90		22X1.5	29			
1.6 i	*8P1/A/B/C, 8PA/A/B/C*	E		1595	BSE	A			07/08 ▸	1J0959481A	●820831	85		90		22X1.5	29			
1.9 TDi	*8P1/A/B/C, 8PA/A/B/C*	D		1896	BXE	M	-		07/08 ▸	1J0959481A	●820831	85		90		22X1.5	29			
S3 (98>2003)																				
1.8 i Turbo 20V	*8L1B*	E		1781	AMK,APY	M			11/98 ▸ 04/02	1J0959481A	●820831	85		90		22X1.5	29			
A3 (96>2003)																				
1.6 i	*8L1/0/A/B/C/H*	E		1595	AEH,AKL,AVU,BFQ	M			09/96 ▸ 06/03	1J0959481A	●820831	85		90		22X1.5	29			
1.9 TDi	*8L1/0/A/B/C/H*	D		1896	AGR,AHF,ALH,ASV,ASZ,ATD,AXR	M			09/96 ▸ 06/03	1J0959481A	●820831	85		90		22X1.5	29			
A3 (2003>2008)																				
1.4 TFSi	*8P1/A/B/C, 8PA/A/B/C*	E		1390	CAXC	M	-		09/07 ▸ 06/08	1J0959481A	●820831	85		90		22X1.5	29			
1.4 TFSi	*8P1/A/B/C, 8PA/A/B/C*	E		1390	CAXC	A	-		03/08 ▸ 06/08	1J0959481A	●820831	85		90		22X1.5	29			
1.6 i	*8P1/A/B/C, 8PA/A/B/C*	E		1595	BGU,BSE,BSF	M			05/03 ▸ 06/08	1J0959481A	●820831	85		90		22X1.5	29			
1.6 i	*8P1/A/B/C, 8PA/A/B/C*	E		1595	BGU,BSE,BSF	A			09/03 ▸ 06/08	1J0959481A	●820831	85		90		22X1.5	29			
1.6 FSi	*8P1/A/B/C, 8PA/A/B/C*	E		1598	BAG,BLF,BLP	M			08/03 ▸ 06/08	1J0959481A	●820831	85		90		22X1.5	29			
1.9 TDi	*8P1/A/B/C, 8PA/A/B/C*	D		1896	BKC,BLS	M			06/03 ▸ 06/08	1J0959481A	●820831	85		90		22X1.5	29			
A4 (94>98)																				
1.6 i	*8D2/0/H, 8D5/0/H*	E		1595	ADP, AHL	M			11/94 ▸ 12/98	893959481	820304	90		95		22X1.5	29			
1.6 i	*8D2/0/H, 8D5/0/H*	E		1595	ADP, AHL	M			11/94 ▸ 12/98	191959481C	819769	84	91	95	102	22X1.5	29			
1.6 i	*8D2/0/H, 8D5/0/H*	E		1595	AHL, ADP	A			11/94 ▸ 12/98	191959481C	819769	84	91	95	102	22X1.5	29			
1.6 i	*8D2/0/H, 8D5/0/H*	E		1595	ADP, AHL	A			11/94 ▸ 12/98	893959481	820304	90		95		22X1.5	29			
1.8 i 20V,1.8 i Turbo 20V	*8D2/0/H/S/T, 8D5/0/H/S*	E		1781	AJL, APU, AEB, ADR, AFY, ARG	M			11/94 ▸ 12/98	191959481C	819769	84	91	95	102	22X1.5	29			
1.8 i 20V,1.8 i Turbo 20V	*8D2/0/H/S/T, 8D5/0/H/S*	E		1781	AEB, ADR, AFY, AJL, ARG, APU	M			11/94 ▸ 12/98	893959481	820304	90		95		22X1.5	29			
1.8 i 20V,1.8 i Turbo 20V	*8D2/0/H/S, 8D5/0/H/S*	E		1781	ADR, AEB, AFY, APU, ARG	A			11/94 ▸ 12/98	191959481C	819769	84	91	95	102	22X1.5	29			
1.8 i 20V,1.8 i Turbo 20V	*8D2/0/H/S, 8D5/0/H/S*	E		1781	ADR, APU, AEB, ARG, AFY	A			11/94 ▸ 12/98	893959481	820304	90		95		22X1.5	29			
2.4 i V6,2.4 i V6 30V	*8D2/0/H/S, 8D5/0/H*	E		2393	APS, APZ, AGA, ARJ, ALF, AFM AJG	M			07/95 ▸ 12/98	893959481	820304	90		95		22X1.5	29			
2.4 i V6,2.4 i V6 30V	*8D2/0/H/S, 8D5/0/H*	E		2393	AJG, ALF, AGA, APS, AFM, APZ ARJ	M			07/95 ▸ 12/98	191959481C	819769	84	91	95	102	22X1.5	29			
2.4 i V6,2.4 i V6 30V	*8D50, 8D2/0/H/S*	E		2393	ALF, APS, AGA, ARJ, APZ, AJG	A			08/97 ▸ 12/98	191959481C	819769	84	91	95	102	22X1.5	29			
2.4 i V6,2.4 i V6 30V	*8D50, 8D2/0/H/S*	E		2393	AGA, APS, APZ, AJG, ALF, ARJ	A			08/97 ▸ 12/98	893959481	820304	90		95		22X1.5	29			
2.6 i V6	*8D2/0/H/S, 8D5/0/H/S*	E		2598	ABC, ACZ	M			11/94 ▸ 12/98	191959481C	819769	84	91	95	102	22X1.5	29			
2.6 i V6	*8D2/0/H/S, 8D5/0/H/S*	E		2598	ABC, ACZ	M			11/94 ▸ 12/98	893959481	820304	90		95		22X1.5	29			
2.6 i V6	*8D2/0/H/S, 8D5/0/H/S*	E		2598	ABC, ACZ	A			11/94 ▸ 07/98	191959481C	819769	84	91	95	102	22X1.5	29			
2.6 i V6	*8D2/0/H/S, 8D5/0/H/S*	E		2598	ABC, ACZ	A			11/94 ▸ 07/98	893959481	820304	90		95		22X1.5	29			
2.8 i V6,2.8 i V6 30V	*8D2/0/H/S, 8D5/0/H*	E		2771	ACK, AQD, APR, AAH, ALG	M			11/94 ▸ 12/98	893959481	820304	90		95		22X1.5	29			
2.8 i V6,2.8 i V6 30V	*8D2/0/H/S, 8D5/0/H*	E		2771	APR, AAH, ACK, AQD, ALG	M			11/94 ▸ 12/98	191959481C	819769	84	91	95	102	22X1.5	29			
2.8 i V6,2.8 i V6 30V	*8D2/0/H/S, 8D5/0/H*	E		2771	ACK, ALG, AQD, APR, AAH	A			02/95 ▸ 12/98	191959481C	819769	84	91	95	102	22X1.5	29			
2.8 i V6,2.8 i V6 30V	*8D2/0/H/S, 8D5/0/H*	E		2771	ACK, APR, AAH, AQD, ALG	A			02/95 ▸ 12/98	893959481	820304	90		95		22X1.5	29			
1.9 TDi	*8D2/0/H, 8D5/0/H*	D		1896	AHU, AHH, AFN, AFF, 1Z	M			11/94 ▸ 12/98	893959481	820304	90		95		22X1.5	29			
1.9 TDi	*8D2/0/H, 8D5/0/H*	D		1896	AHH, AHU, 1Z, AFN, AFF	M			11/94 ▸ 12/98	191959481C	819769	84	91	95	102	22X1.5	29			
1.9 TDi	*8D2/0/H, 8D5/0/H*	D		1896	AFN, AHU, 1Z, AJM	A			01/95 ▸ 12/98	191959481C	819769	84	91	95	102	22X1.5	29			
1.9 TDi	*8D2/0/H, 8D5/0/H*	D		1896	1Z, AFN, AHU, AJM	A			01/95 ▸ 12/98	893959481	820304	90		95		22X1.5	29			
2.5 TDi V6 24V	*8D50*	D		2496	AKN, AFB	M			11/97 ▸ 12/98	191959481C	819769	84	91	95	102	22X1.5	29			
2.5 TDi V6 24V	*8D20, 8D50*	D		2496	AFB, AKN	M			11/97 ▸ 12/98	893959481	820304	90		95		22X1.5	29			
2.5 TDi V6 24V	*8D20, 8D50*	D		2496	AKN, AFB	M			11/97 ▸ 12/98	8D0959481B	820305	90	97	95	102	2				
2.5 TDi V6 24V	*8D20, 8D50*	D		2496	AFB, AKN	A			11/97 ▸ 12/98	8D0959481B	820305	90	97	95	102	2				
2.5 TDi V6 24V	*8D50*	D		2496	AFB	A			01/98 ▸ 12/98	893959481	820304	90		95		22X1.5	29			
2.5 TDi V6 24V	*8D50*	D		2496	AFB	A			01/98 ▸ 12/98	191959481C	819769	84	91	95	102	22X1.5	29			
A4 (99>2001)																				
1.6 i	*8D20, 8D50*	E		1595	AHL, ANA, ARM	M			01/99 ▸ 11/00	191959481C	819769	84	91	95	102	22X1.5	29			
1.6 i	*8D20, 8D50*	E		1595	AHL, ARM, ANA	M			01/99 ▸ 11/00	893959481	820304	90		95		22X1.5	29			
1.6 i	*8D20, 8D50*	E		1595	AHL, ANA, ARM	A			01/99 ▸ 11/00	893959481	820304	90		95		22X1.5	29			
1.6 i	*8D20, 8D50*	E		1595	AHL, ANA, ARM	A			01/99 ▸ 11/00	191959481C	819769	84	91	95	102	22X1.5	29			
1.8 i 20V,1.8 i Turbo 20V	*8D2/0/S/T, 8D5/0/S*	E		1781	APU, ADR, ARK, ARG, AFY, APT AJL, ANB	M			01/99 ▸ 11/00	893959481	820304	90		95		22X1.5	29			
1.8 i 20V,1.8 i Turbo 20V	*8D2/0/S/T, 8D5/0/S*	E		1781	ANB, APT, ARG, AFY, ADR, ARK APU, AJL	M			01/99 ▸ 11/00	191959481C	819769	84	91	95	102	22X1.5	29			
1.8 i 20V,1.8 i Turbo 20V	*8D2/0/S, 8D5/0/S*	E		1781	ADR, APT, ANB, ARG, AFY, APU	A			01/99 ▸ 11/00	191959481C	819769	84	91	95	102	22X1.5	29			
1.8 i 20V,1.8 i Turbo 20V	*8D2/0/S, 8D5/0/S*	E		1781	ADR, APU, ANB, ARG, AFY, APT	A			01/99 ▸ 11/00	893959481	820304	90		95		22X1.5	29			

• **New** Nouveau **Nuevo** Novo **Nuovo** Nieuw **Neu** Yeni Новый Nou

		Type Ctr.		cc		AC		2 3	OE	Valeo	(°)C T1	T2	T3	T4	COD.	○: mm	
AUDI (.../...)																		
A4 (99>2001) (.../...)																		
2.4 i V6 30V	*8D2/0/S, 8D5/0/S*	E	2393	APZ, APS, AML, ARJ	M			02/99 ▸ 11/00	191959481C	**819769**	84	91	95	102	22X1.5	29	
2.4 i V6 30V	*8D2/0/S, 8D5/0/S*	E	2393	ARJ, APS, APZ, AML	M			02/99 ▸ 11/00	893959481	**820304**	90		95		22X1.5	29	
2.4 i V6 30V	*8D2/0/S, 8D5/0/S*	E	2393	APS, APZ, ARJ	A			02/99 ▸ 11/00	893959481	**820304**	90		95		22X1.5	29	
2.4 i V6 30V	*8D2/0/S, 8D5/0/S*	E	2393	APS, ARJ, APZ	A			02/99 ▸ 11/00	191959481C	**819769**	84	91	95	102	22X1.5	29	
2.8 i V6 30V	*8D50, 8D2/0/S*	E	2771	APR, AQD, ATX, AMX	M			01/99 ▸ 11/00	191959481C	**819769**	84	91	95	102	22X1.5	29	
2.8 i V6 30V	*8D50, 8D2/0/S*	E	2771	APR, AQD, AMX, ATX	M			01/99 ▸ 11/00	893959481	**820304**	90		95		22X1.5	29	
2.8 i V6 30V	*8D50, 8D2/0/S*	E	2771	APR, AQD, ATX, AMX	A			01/99 ▸ 11/00	191959481C	**819769**	84	91	95	102	22X1.5	29	
2.8 i V6 30V	*8D50, 8D2/0/S*	E	2771	ATX, AQD, APR, AMX	A			01/99 ▸ 11/00	893959481	**820304**	90		95		22X1.5	29	
1.9 TDi	*8D20, 8D50*	D	1896	AHU, AVG, AFN, AHH, AJM	M			01/99 ▸ 11/00	191959481C	**819769**	84	91	95	102	22X1.5	29	
1.9 TDi	*8D20, 8D50*	D	1896	AHU, AFN, AVG, AHH, AJM	M			01/99 ▸ 11/00	893959481	**820304**	90		95		22X1.5	29	
1.9 TDi	*8D20, 8D50*	D	1896	AHU, AFN	A			01/99 ▸ 11/00	191959481C	**819769**	84	91	95	102	22X1.5	29	
1.9 TDi	*8D20, 8D50*	D	1896	AFN, AHU	A			01/99 ▸ 11/00	893959481	**820304**	90		95		22X1.5	29	
2.5 TDi V6 24V	*8D20, 8D50*	D	2496	AFB	M			01/99 ▸ 11/00	8D0959481B	**820305**	90	97	95	102	2		
2.5 TDi V6 24V	*8D20, 8D50*	D	2496	AFB, AKN	M			02/99 ▸ 11/00	893959481	**820304**	90		95		22X1.5	29	
2.5 TDi V6 24V	*8D20, 8D50*	D	2496	AFB, AKN	M			02/99 ▸ 11/00	191959481C	**819769**	84	91	95	102	22X1.5	29	
2.5 TDi V6 24V	*8D20, 8D50*	D	2496	AFB	A			01/99 ▸ 11/00	8D0959481B	**820305**	90	97	95	102	2		
2.5 TDi V6 24V	*8D20, 8D50*	D	2496	AFB, AKN	A			02/99 ▸ 11/00	191959481C	**819769**	84	91	95	102	22X1.5	29	
2.5 TDi V6 24V	*8D20, 8D50*	D	2496	AFB, AKN	A			02/99 ▸ 11/00	893959481	**820304**	90		95		22X1.5	29	
A4 (2000>2004)																		
2.4 i V6 30V	*8E20, 8E50*	E	2393	AMM,BDV	M			09/01 ▸ 12/04	8D0959481B	**820305**	90	97	95	102	14X1.5	22	
2.4 i V6 30V	*8E20, 8E50*	E	2393	AMM,BDV	A			09/01 ▸ 12/04	8D0959481B	**820305**	90	97	95	102	14X1.5	22	
3.0 i 30V,3.0 i V6 30V	*8E2/0/5, 8E5/0/5*	E	2976	ASN,BBJ	M			12/00 ▸ 12/04	8D0959481B	**820305**	90	97	95	102	14X1.5	22	
3.0 i 30V,3.0 i V6 30V	*8E2/0/5, 8E5/0/5*	E	2976	ASN,AVK,BBJ	A			12/00 ▸ 12/04	8D0959481B	**820305**	90	97	95	102	14X1.5	22	
2.5 TDi 24V,2.5 TDi V6 2.5 TDi V6 24V	*8E20, 8E50*	D	2496	AYM, AKE, BAU, BFC, BDH, BDG	M			12/00 ▸	8D0959481B	**820305**	90	97	95	102	2		
2.5 TDi V6,2.5 TDi V6 24V	*8E20, 8E50*	D	2496	BFC, AKE, AYM, BDG, BAU	A			04/01 ▸	8D0959481B	**820305**	90	97	95	102	2		
A4 Cabriolet (2002>2005)																		
2.5 TDI V6 24V	*8H70*	D	2496	BCZ,BDG,BFC	M			08/02 ▸ 12/05	8D0959481B	**820305**	90	97	95	102	14X1.5	22	
2.5 TDI V6 24V	*8H70*	D	2496	BCZ,BDG,BFC	A			08/02 ▸ 12/05	8D0959481B	**820305**	90	97	95	102	14X1.5	22	
A6 (94>97)																		
1.8 E 20V,1.8 i 20V	*4A2/0/H, 4A5/0/H*	E	1781	ADR	M			07/95 ▸ 09/97	191959481C	**819769**	84	91	95	102	22X1.5	29	
1.8 E 20V	*4A2/0/H, 4A5/0/H*	E	1781	ADR	A			07/95 ▸ 09/97	191959481C	**819769**	84	91	95	102	22X1.5	29	
2.0 E,2.0 E 16V,2.0 i 2.0 i 16V	*4A20, 4A50*	E	1984	ABK, ADW, AAE, ACE	M			07/94 ▸ 09/97	191959481C	**819769**	84	91	95	102	22X1.5	29	
2.0 E	*4A20, 4A50*	E	1984	ADW, ABK	A			07/94 ▸ 09/97	191959481C	**819769**	84	91	95	102	22X1.5	29	
2.3 E	*4A20, 4A50*	E	2309	AAR	M			07/94 ▸ 06/96	191959481C	**819769**	84	91	95	102	22X1.5	29	
2.4 i V6	*4A20, 4A50*	E	2393	AFM	A			07/95 ▸ 09/97	191959481C	**819769**	84	91	95	102	22X1.5	29	
2.6 E V6	*4A20, 4A50*	E	2598	ABC, ACZ	M			07/94 ▸ 09/97	191959481C	**819769**	84	91	95	102	22X1.5	29	
2.6 E V6	*4A20, 4A50*	E	2598	ABC, ACZ	A			07/94 ▸ 09/97	191959481C	**819769**	84	91	95	102	22X1.5	29	
2.8 E V6,2.8 E V6 30V 2.8 i V6	*4A20, 4A50*	E	2771	ACK, AAH, AEJ	M			07/94 ▸ 09/97	191959481C	**819769**	84	91	95	102	22X1.5	29	
2.8 E V6,2.8 E V6 30V 2.8 i V6	*4A20, 4A50*	E	2771	AEJ, AAH, ACK	A			07/94 ▸ 09/97	191959481C	**819769**	84	91	95	102	22X1.5	29	
1.9 TDi	*4A20, 4A50*	D	1896	AHU, 1Z	M			07/94 ▸ 09/97	191959481C	**819769**	84	91	95	102	22X1.5	29	
1.9 TDi	*4A20, 4A50*	D	1896	1Z, AHU	A			07/94 ▸ 09/97	191959481C	**819769**	84	91	95	102	22X1.5	29	
2.5 TDi	*4A50, 4A2/0/H*	D	2460	AAT, AEL	M			07/94 ▸ 09/97	191959481C	**819769**	84	91	95	102	22X1.5	29	
2.5 TDi	*4A50, 4A2/0/H*	D	2460	AEL, AAT	A			07/94 ▸ 09/97	191959481C	**819769**	84	91	95	102	22X1.5	29	
A6 (97>2001)																		
1.8 i 20V,1.8 i Turbo 20V	*4B2/0/H, 4B5/0/H*	E	1781	AEB, ANB, AJL, AQE, ARK, AJP AWT, ARH	M			04/97 ▸ 05/01	8D0959481B	**820305**	90	97	95	102	2		
1.8 i 20V,1.8 i Turbo 20V	*4B2/0/H, 4B5/0/H*	E	1781	AJP, AQE, ANB, AEB, ARK, AWT ARH	A			04/97 ▸ 05/01	8D0959481B	**820305**	90	97	95	102	2		
2.4 i V6,2.4 i V6 30V	*4B2/0/H, 4B5/0/H*	E	2393	AGA, ALF, APS, AMM, ARJ, ASM AJG, ALW, AML	M			04/97 ▸ 05/01	8D0959481B	**820305**	90	97	95	102	2		
2.4 i V6,2.4 i V6 30V	*4B2/0/H, 4B5/0/H*	E	2393	ARJ, ALF, AJG, APS, AMM, AML AGA, APC	A			04/97 ▸ 05/01	8D0959481B	**820305**	90	97	95	102	2		
2.7 i V6 Bi turbo	*4B2/0/H, 4B5/0/H*	E	2671	AJK, AZA	M			03/98 ▸ 05/01	8D0959481B	**820305**	90	97	95	102	2		
2.7 i V6 Bi turbo	*4B20, 4B50*	E	2671	AZA	A			09/00 ▸ 05/01	8D0959481B	**820305**	90	97	95	102	2		
2.8 i V6 30V	*4B2/0/H, 4B5/0/H*	E	2771	APR, ALG, ACK, AMX, ATX, AQD	M			04/97 ▸ 05/01	8D0959481B	**820305**	90	97	95	102	2		

• **New** Nouveau **Nuevo** Novo **Nuovo** Nieuw **Neu** Yeni Новый Nou

Valeo

Thermoswitch
Thermocontact
Termocontacto
Termocontato
Termocontatto
Thermokontakt
Thermoschalter

Włącznik wentylatora
Tepelný spínač
Termokapcsoló
Termocontact
Fan müşiri
ТЕРМОДАТЧИК

		Type Ctr.		cc			AC			OE	Valeo	(°)C T1	T2	T3	T4	COD.	mm	
AUDI (.../...)																		
A6 (97>2001) (.../...)																		
2.8 i V6 30V	4B2/0/H, 4B5/0/H	E		2771	ATX, ACK, AQD, AGE, ALG, APR AMX	A			04/97 ▸ 05/01	8D0959481B	**820305**	90	97	95	102	2		
4.2 i V8 40V	4B40	E		4172	ASG	A			06/00 ▸ 05/01	8D0959481B	**820305**	90	97	95	102	2		
1.9 TDi	4B5H, 4B2/0/H	D		1896	AJM, AVG, AFN	M			04/97 ▸ 05/01	8D0959481B	**820305**	90	97	95	102	2		
1.9 TDi	4B2/0/H, 4B5/0/H	D		1896	AJM, AFN, AVG	A			04/97 ▸ 05/01	8D0959481B	**820305**	90	97	95	102	2		
2.5 TDi V6 24V	4B2/0/H, 4B5/0/H	D		2496	AFB, AKN, AKE	M			07/97 ▸ 05/01	8D0959481B	**820305**	90	97	95	102	2		
2.5 TDi V6 24V	4B2/0/H, 4B5/0/H	D		2496	AKN, AFB, AKE	A			07/97 ▸ 05/01	8D0959481B	**820305**	90	97	95	102	2		
A6 (2001>2004)																		
1.8 i Turbo 20V	4B20, 4B50	E		1781	AWT	M			06/01 ▸	8D0959481B	**820305**	90	97	95	102	2		
1.8 i Turbo 20V	4B20, 4B50	E		1781	AWT	A			06/01 ▸	8D0959481B	**820305**	90	97	95	102	2		
2.4 i V6 30V	4B20, 4B50	E		2393	BDV, AMM, ASM	M			06/01 ▸	8D0959481B	**820305**	90	97	95	102	2		
2.4 i V6 30V	4B20, 4B50	E		2393	BDV, AMM	A			06/01 ▸	8D0959481B	**820305**	90	97	95	102	2		
2.7 i V6 Bi Turbo	4B20, 4B50	E		2671	BES, ARE	M			06/01 ▸	8D0959481B	**820305**	90	97	95	102	2		
2.7 i V6 Bi Turbo	4B20, 4B50	E		2671	BES, ARE	A			06/01 ▸	8D0959481B	**820305**	90	97	95	102	2		
4.2 i V8 40V	4B40, 4B60	E		4172	ASG	A			06/01 ▸	8D0959481B	**820305**	90	97	95	102	2		
1.9 TDi	4B20, 4B50	D		1896	AVF, AWX	M			06/01 ▸	8D0959481B	**820305**	90	97	95	102	2		
1.9 TDi	4B20, 4B50	D		1896	AVF, AWX	A			06/01 ▸	8D0959481B	**820305**	90	97	95	102	2		
2.5 TDi V6,2.5 TDi V6 24V	4B20, 4B50	D		2496	AYM, BFC, BDH, BAU, BCZ, BDG AKE	M			06/01 ▸	8D0959481B	**820305**	90	97	95	102	2		
2.5 TDi V6,2.5 TDi V6 24V	4B20, 4B50	D		2496	BAU, AKE, BCZ, AYM, BDG, BFC BDH	A			06/01 ▸	8D0959481B	**820305**	90	97	95	102	2		
A6 Allroad (2000>2005)																		
2.7 i V6 Turbo	4BH0	E		2671	ARE, BES	M			05/00 ▸	8D0959481B	**820305**	90	97	95	102	2		
2.7 i V6 Turbo	4BH0	E		2671	BES, ARE	A			05/00 ▸	8D0959481B	**820305**	90	97	95	102	2		
2.5 TDi V6 24V	4BH0	D		2496	AKE	M			05/00 ▸	8D0959481B	**820305**	90	97	95	102	2		
2.5 TDi V6 24V	4BH0	D		2496	AKE	A			05/00 ▸	8D0959481B	**820305**	90	97	95	102	2		
A8 (94>2002)																		
2.8 E V6,2.8 i V6	4D2G	E		2771	AAH, AEJ	M			06/94 ▸ 03/96	893959481	**820304**	90		95		22X1.5	29	
2.8 E V6,2.8 E V6 30V 2.8 i V6	4D2G	E		2771	APR, ACK, AMX, ALG, AQD, AAH AEJ	M			06/94 ▸ 09/02	191959481C	**819769**	84	91	95	102	22X1.5	29	
2.8 E V6 30V	4D2G	E		2771	AQD, APR, AMX	M			10/98 ▸ 09/02	251959481K	**820229**	79	85	87	93	22X1.5	29	
2.8 E V6,2.8 i V6	4D2G	E		2771	AEJ, AAH	A			06/94 ▸ 03/96	893959481	**820304**	90		95		22X1.5	29	
2.8 E V6,2.8 E V6 30V 2.8 i V6	4D2G	E		2771	ACK, AEJ, APR, AQD, AMX, AAH ALG	A			06/94 ▸ 09/02	191959481C	**819769**	84	91	95	102	22X1.5	29	
2.8 E V6 30V	4D2G	E		2771	AMX, AQD, APR	A			10/98 ▸ 09/02	251959481K	**820229**	79	85	87	93	22X1.5	29	
3.7 i V8	4D2G	E		3697	AKJ, AKC, AEW, AQG	A			10/95 ▸ 09/02	251959481K	**820229**	79	85	87	93	22X1.5	29	
3.7 i V8	4D2G	E		3697	AKC, AQG	A			10/98 ▸ 09/02	191959481C	**819769**	84	91	95	102	22X1.5	29	
4.2 i V8,4.2 i V8 32V	4D8G, 4D2/2/G	E		4172	ABZ, AKG, ARU, AUW, AGH, AQF AEM	A			06/94 ▸ 09/02	251959481K	**820229**	79	85	87	93	22X1.5	29	
4.2 i V8,4.2 i V8 32V	4D8G, 4D2/2/G	E		4172	AUW, ARU, AQF, ABZ	A			10/98 ▸ 09/02	191959481C	**819769**	84	91	95	102	22X1.5	29	
6.0 i W12	4D2G, 4D8G	E		6005	AZC	A			03/01 ▸ 09/02	8D0959481B	**820305**	90	97	95	102	14X1.5	22	
2.5 TDi V6 24V	4D2G	D		2496	AFB, AKE, AKN	M			06/97 ▸ 09/02	191959481C	**819769**	84	91	95	102	22X1.5	29	
2.5 TDi V6 24V	4D2G	D		2496	AKE, AKN	M			10/98 ▸ 09/02	251959481K	**820229**	79	85	87	93	22X1.5	29	
2.5 TDi V6 24V	4D2G	D		2496	AKN, AKE, AFB	A			06/97 ▸ 09/02	191959481C	**819769**	84	91	95	102	22X1.5	29	
2.5 TDi V6 24V	4D2G	D		2496	AKE, AFB, AKN	A			10/98 ▸ 09/02	251959481K	**820229**	79	85	87	93	22X1.5	29	
3.3 TDi V8	4D2G	D		3328	AKF	A			12/99 ▸ 09/02	191959481C	**819769**	84	91	95	102	22X1.5	29	
3.3 TDi V8	4D2G	D		3328	AKF	A			12/99 ▸ 09/02	251959481K	**820229**	79	85	87	93	22X1.5	29	
Cabriolet																		
1.8 E 20V	8G70	E		1781	ADR	M			04/97 ▸ 08/00	191959481C	**819769**	84	91	95	102	22X1.5	29	
1.8 E 20V	8G70	E		1781	ADR	M			04/97 ▸ 08/00	893959481	**820304**	90		95		22X1.5	29	
1.8 E 20V	8G70	E		1781	ADR	A			04/97 ▸ 08/00	191959481C	**819769**	84	91	95	102	22X1.5	29	
1.8 E 20V	8G70	E		1781	ADR	A			04/97 ▸ 08/00	893959481	**820304**	90		95		22X1.5	29	
2.0 E,2.0 E 16V	8G70	E		1984	ACE, ABK	M			01/93 ▸ 09/98	893959481	**820304**	90		95		22X1.5	29	
2.0 E,2.0 E 16V	8G70	E		1984	ACE, ABK	M			01/93 ▸ 09/98	191959481C	**819769**	84	91	95	102	22X1.5	29	
2.3 E	8G70	E		2309	NG	M			06/91 ▸ 07/94	191959481C	**819769**	84	91	95	102	22X1.5	29	
2.3 E	8G70	E		2309	NG	M			06/91 ▸ 07/94	893959481	**820304**	90		95		22X1.5	29	
2.3 E	8G70	E		2309	NG	A			06/91 ▸ 07/94	191959481C	**819769**	84	91	95	102	22X1.5	29	
2.3 E	8G70	E		2309	NG	A			06/91 ▸ 07/94	893959481	**820304**	90		95		22X1.5	29	
2.6 E V6	8G70	E		2598	ABC, ACZ	M			01/94 ▸ 08/00	893959481	**820304**	90		95		22X1.5	29	
2.6 E V6	8G70	E		2598	ACZ, ABC	M			01/94 ▸ 08/00	191959481C	**819769**	84	91	95	102	22X1.5	29	

• **New** Nouveau **Nuevo** Novo **Nuovo** Nieuw **Neu** Yeni Новый Nou

AUDI (.../...)

Cabriolet (.../...)

2.6 E V6	8G70	E	2598	ABC, ACZ	A			01/94 ▸ 08/00	191959481C	**819769**	84	91	95	102	22X1.5	29
2.6 E V6	8G70	E	2598	ABC, ACZ	A			01/94 ▸ 08/00	893959481	**820304**	90		95		22X1.5	29
2.8 i V6	8G70	E	2771	AAH	M			11/92 ▸ 08/00	191959481C	**819769**	84	91	95	102	22X1.5	29
2.8 i V6	8G70	E	2771	AAH	M			11/92 ▸ 08/00	893959481	**820304**	90		95		22X1.5	29
2.8 i V6	8G70	E	2771	AAH	A			01/93 ▸ 08/00	191959481C	**819769**	84	91	95	102	22X1.5	29
2.8 i V6	8G70	E	2771	AAH	A			01/93 ▸ 08/00	893959481	**820304**	90		95		22X1.5	29
1.9 TDi	8G70	D	1896	1Z, AHU	M			07/95 ▸ 08/00	191959481C	**819769**	84	91	95	102	22X1.5	29
1.9 TDi	8G70	D	1896	AHU, 1Z	M			07/95 ▸ 08/00	893959481	**820304**	90		95		22X1.5	29

Coupé (80>88)

1.6	8550, 8560	E	1588	DD, YN	M			02/81 ▸ 08/82	191959481C	**819769**	84	91	95	102	22X1.5	29
1.6	8550	E	1588	DD, YN	A			02/81 ▸ 08/82	191959481C	**819769**	84	91	95	102	22X1.5	29
1.8,1.8 i	855/0/3/J/K, 856/0/3	E	1781	DS, JN, DZ, SF, JV	M			09/82 ▸ 07/88	191959481C	**819769**	84	91	95	102	22X1.5	29
1.8,1.8 i	855/0/3/K, 856/0/3	E	1781	DZ, JN, DS, JV, SF	M			08/85 ▸ 07/88	893959481	**820304**	90		95		22X1.5	29
1.8,1.8 i	855/0/3/J/K	E	1781	JV, DS, JN, SF	A			09/82 ▸ 07/88	191959481C	**819769**	84	91	95	102	22X1.5	29
1.8,1.8 i	855/0/3/J/K	E	1781	DS, JN, SF, JV	A			08/85 ▸ 07/88	893959481	**820304**	90		95		22X1.5	29
1.9	8553, 8563	E	1921	WN	M			10/80 ▸ 08/83	191959481C	**819769**	84	91	95	102	22X1.5	29
1.9	8553, 8563	E	1921	WN	A			10/80 ▸ 08/83	191959481C	**819769**	84	91	95	102	22X1.5	29
2.0 i	8563, 855/3/K	E	1994	JS, HP	M			08/83 ▸ 07/86	191959481C	**819769**	84	91	95	102	22X1.5	29
2.0 i	8563, 855/3/K	E	1994	JS, HP	M			08/85 ▸ 07/86	893959481	**820304**	90		95		22X1.5	29
2.0 i	8563, 855/3/K	E	1994	HP, JS, JL	A			08/83 ▸ 07/87	191959481C	**819769**	84	91	95	102	22X1.5	29
2.0 i	8563, 855/3/K	E	1994	JS, HP, JL	A			08/85 ▸ 07/87	893959481	**820304**	90		95		22X1.5	29
2.2 i	8553, 8563	E	2144	KE, WE, KL	M			08/81 ▸ 08/84	191959481C	**819769**	84	91	95	102	22X1.5	29
2.2 i	8553	E	2144	WE	A			04/81 ▸ 08/83	191959481C	**819769**	84	91	95	102	22X1.5	29
2.2,2.2 i	8563, 855/3/9/K	E	2226	KX, HY, KV, JT	M			08/84 ▸ 07/88	191959481C	**819769**	84	91	95	102	22X1.5	29
2.2,2.2 i	8563, 855/3/9/K	E	2226	HY, KX, KV, JT	M			08/85 ▸ 07/88	893959481	**820304**	90		95		22X1.5	29
2.2 i	8563, 855/3/9/K	E	2226	HY, KV, KX	A			08/84 ▸ 07/88	191959481C	**819769**	84	91	95	102	22X1.5	29
2.2 i	8563, 855/3/9/K	E	2226	KV, HY, KX	A			08/85 ▸ 07/88	893959481	**820304**	90		95		22X1.5	29
2.3 E,2.3 i	855K	E	2309	NG	M			01/87 ▸ 07/88	191959481C	**819769**	84	91	95	102	22X1.5	29
2.3 E,2.3 i	855K	E	2309	NG	M			01/87 ▸ 07/88	893959481	**820304**	90		95		22X1.5	29
2.3 i	855K	E	2309	NG	A			02/87 ▸ 07/88	893959481	**820304**	90		95		22X1.5	29
2.3 i	855K	E	2309	NG	A			02/87 ▸ 07/88	191959481C	**819769**	84	91	95	102	22X1.5	29

Coupé (88>96)

1.8 E	8B30	E	1781	DZ	M			08/89 ▸ 07/91	893959481	**820304**	90		95		22X1.5	29
1.8 E	8B30	E	1781	DZ	M			08/89 ▸ 07/91	191959481C	**819769**	84	91	95	102	22X1.5	29
2.0 E,2.0 E 16V,2.0 i 2.0 i 16V	8B30	E	1984	6A, ACE, 3A, ABK, AAD	M			08/89 ▸ 01/96	191959481C	**819769**	84	91	95	102	22X1.5	29
2.0 E,2.0 E 16V,2.0 i 2.0 i 16V	8B30	E	1984	ACE, AAD, ABK, 3A, 6A	M			08/89 ▸ 01/96	893959481	**820304**	90		95		22X1.5	29
2.0 E,2.0 i	8B30	E	1984	ABK, 3A, AAD	A			08/89 ▸ 01/96	191959481C	**819769**	84	91	95	102	22X1.5	29
2.0 E,2.0 i	8B30	E	1984	ABK, AAD, 3A	A			08/89 ▸ 01/96	893959481	**820304**	90		95		22X1.5	29
2.0 E 20V	8B30	E	1994	NM	M			11/88 ▸ 07/91	893959481	**820304**	90		95		22X1.5	29
2.0 E 20V	8B30	E	1994	NM	M			11/88 ▸ 07/91	191959481C	**819769**	84	91	95	102	22X1.5	29
2.2 i,2.2 i Turbo 20V	8B30	E	2226	KV, ABY	M			11/88 ▸ 05/95	191959481C	**819769**	84	91	95	102	22X1.5	29
2.2 i,2.2 i Turbo 20V	8B30	E	2226	KV, ABY	M			11/88 ▸ 05/95	893959481	**820304**	90		95		22X1.5	29
2.3 E,2.3 Turbo 20V 2.3 i 20V	8B30	E	2309	NG, 7A, 3B	M			11/88 ▸ 07/94	191959481C	**819769**	84	91	95	102	22X1.5	29
2.3 E,2.3 Turbo 20V 2.3 i 20V	8B30	E	2309	NG, 7A, 3B	M			11/88 ▸ 07/94	893959481	**820304**	90		95		22X1.5	29
2.3 E,2.3 i 20V	8B30	E	2309	7A, NG	A			08/89 ▸ 05/94	191959481C	**819769**	84	91	95	102	22X1.5	29
2.3 E,2.3 i 20V	8B30	E	2309	7A, NG	A			08/89 ▸ 05/94	893959481	**820304**	90		95		22X1.5	29
2.6 E V6	8B30	E	2598	ABC	M			08/92 ▸ 01/96	893959481	**820304**	90		95		22X1.5	29
2.6 E V6	8B30	E	2598	ABC	M			08/92 ▸ 01/96	191959481C	**819769**	84	91	95	102	22X1.5	29
2.6 E V6	8B30	E	2598	ABC	A			08/92 ▸ 01/96	191959481C	**819769**	84	91	95	102	22X1.5	29
2.6 E V6	8B30	E	2598	ABC	A			08/92 ▸ 01/96	893959481	**820304**	90		95		22X1.5	29
2.8 i V6	8B30	E	2771	AAH	M			08/91 ▸ 05/95	191959481C	**819769**	84	91	95	102	22X1.5	29
2.8 i V6	8B30	E	2771	AAH	M			08/91 ▸ 05/95	893959481	**820304**	90		95		22X1.5	29
2.8 i V6	8B30	E	2771	AAH	A			09/91 ▸ 03/95	191959481C	**819769**	84	91	95	102	22X1.5	29
2.8 i V6	8B30	E	2771	AAH	A			09/91 ▸ 03/95	893959481	**820304**	90		95		22X1.5	29

Quattro

2.2 i Turbo	8591, 857/0/1	E	2144	WR, KW, GV	M			05/84 ▸ 07/87	893959481	**820304**	90		95		22X1.5	29
2.2 i Turbo	857/2/7	E	2144	WX	M			08/84 ▸ 07/89	191959481C	**819769**	84	91	95	102	22X1.5	29

• **New** Nouveau **Nuevo** Novo **Nuovo** Nieuw **Neu** Yeni Новый Nou

		Type Ctr.		cc			AC			OE	Valeo	(°)C T1	T2	T3	T4	COD.	mm
AUDI (.../...)																	
Quattro (.../...)																	
2.3 i Turbo 2.3 i Turbo 20V	*857/0/1*	E	2226	RR, MB	M			08/87 ▸ 07/91	191959481C	**819769**	84	91	95	102	22X1.5	29
RS2 (94>95)																	
2.2 Turbo	*8C57*	E	2226	ADU	M			03/94 ▸ 06/95	191959481C	**819769**	84	91	95	102	22X1.5	29
RS6 Quattro																	
4.2 i V8 40V	*4B60*	E	4172	BCY	A			07/02 ▸ 04/04	8D0959481B	**820305**	90	97	95	102	2	
S3 (98>2003)																	
1.8 i Turbo 20V	*8L1B*	E	1781	AMK, APY	M			11/98 ▸	867959481	**820034**	84		95		22X1.5	29
1.8 i Turbo 20V	*8L1B*	E	1781	AMK,APY	M			11/98 ▸ 04/02	1J0959481	**820302**	90		95		22X1.5	29
S4 (97>99)																	
2.7 i V6 Bi Turbo 30V	*8D50, 8D2/0/5*	E	2671	APB, AGB	M			10/97 ▸ 01/99	191959481C	**819769**	84	91	95	102	22X1.5	29
2.7 i V6 Bi Turbo 30V	*8D50, 8D2/0/5*	E	2671	AGB, APB	M			10/97 ▸ 01/99	893959481	**820304**	90		95		22X1.5	29
2.7 i V6 Bi Turbo 30V	*8D25*	E	2671	APB	A			08/98 ▸ 01/99	191959481C	**819769**	84	91	95	102	22X1.5	29
2.7 i V6 Bi Turbo 30V	*8D25*	E	2671	APB	A			08/98 ▸ 01/99	893959481	**820304**	90		95		22X1.5	29
S4 (99>2001)																	
2.7 i V6 30V	*8D20, 8D50*	E	2671	AGB	M			02/99 ▸	191959481C	**819769**	84	91	95	102	22X1.5	29
2.7 i V6 30V	*8D20, 8D50*	E	2671	AGB	M			02/99 ▸	893959481	**820304**	90		95		22X1.5	29
S6 (94>97)																	
2.2 i Turbo 20V	*4A28, 4A58*	E	2226	AAN	M			07/94 ▸	191959481C	**819769**	84	91	95	102	22X1.5	29
2.2 i Turbo 20V	*4A28, 4A58*	E	2226	AAN	A			07/94 ▸	191959481C	**819769**	84	91	95	102	22X1.5	29
4.2 i V8 32V	*4A28, 4A58*	E	4172	AEC	M			07/94 ▸	191959481C	**819769**	84	91	95	102	22X1.5	29
4.2 i V8 32V	*4A28, 4A58*	E	4172	AEC	A			07/94 ▸	191959481C	**819769**	84	91	95	102	22X1.5	29
S6 Plus Quattro (96>97)																	
4.2 i V8 32V	*4A28, 4A58*	E	4172	AHK	M			06/96 ▸ 10/97	191959481C	**819769**	84	91	95	102	22X1.5	29
S6 (99>2001)																	
4.2 i V8 40V	*4B40, 4B60*	E	4172	ANK, AQJ	M			09/99 ▸	8D0959481B	**820305**	90	97	95	102	2	
4.2 i V8 40V	*4B40, 4B60*	E	4172	ANK, AQJ	A			09/99 ▸ 05/01	8D0959481B	**820305**	90	97	95	102	2	
S6 (2001>2005)																	
4.2 i V8 40V	*4B40, 4B60*	E	4172	ANK	A			06/01 ▸	8D0959481B	**820305**	90	97	95	102	2	
S8 (96>98)																	
4.2 i V8	*4D2G*	E	4172	AHC, AKH	M			09/96 ▸ 12/98	251959481K	**820229**	79	85	87	93	22X1.5	29
4.2 i V8	*4D2G*	E	4172	AHC, AKH	A			08/97 ▸ 12/98	251959481K	**820229**	79	85	87	93	22X1.5	29
S8 (99>2002)																	
4.2 i V8	*4D2G*	E	4172	AQH, AVP	M			05/99 ▸ 09/02	191959481C	**819769**	84	91	95	102	22X1.5	29
4.2 i V8	*4D2G*	E	4172	AQH, AVP	M			05/99 ▸ 09/02	251959481K	**820229**	79	85	87	93	22X1.5	29
4.2 i V8	*4D2G*	E	4172	AYS, AVP, AQH, BCS	A			05/99 ▸ 09/02	191959481C	**819769**	84	91	95	102	22X1.5	29
4.2 i V8	*4D2G*	E	4172	BCS, AQH, AVP, AYS	A			05/99 ▸ 09/02	251959481K	**820229**	79	85	87	93	22X1.5	29
TT (98>2006)																	
1.8 i Turbo 20V	*8N30, 8N90*	E	1781	AJQ,APP,APX,ARY,AUM,AUQ,BAM	M			10/98 ▸ 06/06	1H0959481B	**820035**	84	91	95	102	22X1.5	29
1.8 i Turbo 20V	*8N30, 8N90*	E	1781	AUQ	A			09/02 ▸ 06/06	1H0959481B	**820035**	84	91	95	102	22X1.5	29
1.8 i Turbo 20V	*8N90, 8N30*	E	1781	AJQ,APX	M	+/-		10/98 ▸ 06/06	191919369A	•**820833**			120		20	
AUTOBIANCHI																	
A112																	
903	*A112B*	E	903	A112A000,A112A200	M		+ Cable	10/69 ▸ 1985	4478951	**819766**	87		92		22x1.5	29
965	*A112B*	E	965	A112B1000	M		+ Cable	10/69 ▸ 07/85	4478951	**819766**	87		92		22x1.5	29
982	*A112A*	E	982	A112A1000	M		+ Cable	09/71 ▸ 1975	4478951	**819766**	87		92		22x1.5	29
1050	*A112B*	E	1049	A112AB2C0	M		+ Cable	06/75 ▸ 1985	4478951	**819766**	87		92		22x1.5	29
Y10																	
1.0,1.0 ie,1000	*156B, 156AA, 156B1, 156AE 156AD, 156A, 156E*	E	999	156A2.000, 156A2.246 156A2.100, 156A3.000	M			07/85 ▸ 09/92	5992746	**819774**	87		92		22X1.5	29

• **New** Nouveau **Nuevo** Novo **Nuovo** Nieuw **Neu** Yeni Новый Nou

		Type Ctr.		CC			AC			OE	Valeo	(°)C T1	T2	T3	T4	COD.	☼: mm	
AUTOBIANCHI (.../...)																		
Y10 (.../...)																		
1050,1050 Turbo	*156D, 156D1, 156C, 156C1*	E	1049	156A1.000, 156A.000		M			07/85 ▸ 12/88	5992746	**819774**	87		92		22X1.5	29	
1.1 ie	*156BG, 156AG*	E	1108	156C.046, 176B2.000		M	+		07/93 ▸ 10/95	46477717	**820031**	87	92	92	97	22X1.5	29	
1.1 ie	*156AC, 156AG, 156CG 156BG*	E	1108	156C.000, 176B2.000, 156C.046		M			01/89 ▸ 10/95	5992746	**819774**	87		92		22X1.5	29	
1.1 ie	*156AG, 156AC*	E	1108	176B2.000, 156C.046, 156C.000		A			11/89 ▸ 10/95	5992746	**819774**	87		92		22X1.5	29	
1.3	*156AF*	E	1297	146A5.046		M		+ Cable	01/89 ▸ 1995	7558930	**820314**	92	97	97	102	22X1.5	29	
1.3	*156AB*	E	1301	156B.000		M		+ Cable	01/89 ▸ 09/92	7558930	**820314**	92	97	97	102	22X1.5	29	
BMW																		
Z3 E36																		
1.9 i	*CM/11/12*	E	1895	M43B19		M			09/98 ▸ 06/02	61318386135	**820318**	80		99		14X1.5		
3 series E21																		
318i	*17/31/32*	E	1766	M10B/18/18K		M			09/79 ▸ 12/83	61311364272	**820259**	90		97		14X1.5		
318i	*17/41/42*	E	1766	M10B/18/18K		A			10/79 ▸ 12/82	61311364272	**820259**	90		97		14X1.5		
320/6	*29/61/62*	E	1990	M60		A			08/77 ▸ 08/79	61311364272	**820259**	90		97		14X1.5		
320/6	*29/61/62*	E	1991	M60		A			08/77 ▸ 08/79	61311364273	**820205**	95		100		14X1.5		
323i	*30/71/72*	E	2316	M60.EZ		M			01/78 ▸ 08/79	61311364272	**820259**	90		97		14X1.5		
323i	*30/81/82*	E	2316	M60.EZ		A			09/78 ▸ 07/79	61311364272	**820259**	90		97		14X1.5		
323i	*30/71/72*	E	2316	M60.EZ		M			01/78 ▸ 08/79	61311364273	**820205**	95		100		14X1.5		
323i	*30/81/82*	E	2316	M60.EZ		A			09/78 ▸ 07/79	61311364273	**820205**	95		100		14X1.5		
3 series E30																		
316i	*AB/11/12, AC/11/12, AJ/11/12*	E	1596	M40B16ME.8		M	+		09/88 ▸ 09/93	61311378073	**820220**	85	93	90	98	14X1.5		
316i,316i Touring	*AB/21/22, AC/21/22, AJ/21 22*	E	1596	M40B16ME.8		A	+		09/88 ▸ 09/93	61311378073	**820220**	85	93	90	98	14X1.5		
316,318i	*10/11/12/52/72, 13/15/31 32/52/72, AC/51/71, AK/31 51/71*	E	1766	M10B/18V/18L/18K/18LE		M	+		09/82 ▸ 09/87	61311364272	**820259**	90		97		14X1.5		
316,318i	*10/11/12/52, AC51, 13/15 31/32/52/72, AK/31/51*	E	1766	M10B/18V/18LE/18L		M	+		09/87 ▸ 09/88	61311378073	**820220**	85	93	90	98	14X1.5		
316,318i	*10/11/21/22/32/42/62/81 82, 13/25/41/42/62/82, AC 61/81, AK/41/61*	E	1766	M10B/18V/18L/18K/18LE		A	+		09/82 ▸ 09/87	61311364272	**820259**	90		97		14X1.5		
316,318i	*10/21/62, AC61, 13/25/41 42/62/82, AK/41/61*	E	1766	M10B/18V/18L/18LE		A	+		09/87 ▸ 08/88	61311378073	**820220**	85	93	90	98	14X1.5		
316,318i	*10/11/12/52/72, 13/15/31 32/52/72, AC/51/71, AK/31 51/71*	E	1766	M10B/18V/18LE/18L/18K		M	+		09/82 ▸ 09/87	61311364273	**820205**	95		100		14X1.5		
316,318i	*10/11/21/22/32/42/62/81 82, 13/25/41/42/62/82, AC 61/81, AK/41/61*	E	1766	M10B/18L/18LE/18K/18V		A	+		09/82 ▸ 09/87	61311364273	**820205**	95		100		14X1.5		
318i,318i Touring,318iS	*AG71, AF/51/52/91, AJ/51 52/72, BA/51/52*	E	1796	M40B///18ME/18, M42B//18, M40B18		M	+/-		09/87 ▸ 09/93	61311378073	**820220**	85	93	90	98	14X1.5		
318i,318i Touring	*AG81, AF/61/62, AJ/61/62 82, BA/61/62*	E	1796	M40B/18//18ME/18		A	+/-		09/87 ▸ 09/93	61311378073	**820220**	85	93	90	98	14X1.5		
320i,320i Touring	*11/32/51/52, AA31, AD31 14/32/51/52, AH/51/52/71 BA/11/12/21/22/31/32*	E	1990	M20B//20M1.Z7/20//20/20M1.Z7		M	+/-		07/86 ▸ 09/93	61311378073	**820220**	85	93	90	98	14X1.5		
320i	*11/32/51, AA31, AD31, 14/32/51*	E	1990	M20B/20/20M1.Z7		M	+		09/82 ▸ 09/87	61311364272	**820259**	90		97		14X1.5		
320i,320i Touring	*11/42/61/62, AA41, AD41 14/42/62, AH/61/62/81 BA/41/42*	E	1990	M20B/20K//20M1.Z7/20		A	+/-		09/86 ▸ 09/93	61311378073	**820220**	85	93	90	98	14X1.5		
320i	*1442, AA41, AD41, 11/42*	E	1990	M20B20		A	+		09/82 ▸ 09/87	61311364272	**820259**	90		97		14X1.5		
320iS	*AC95, AK95*	E	1991	S14B20		M	+		01/88 ▸ 12/91	61311378073	**820220**	85	93	90	98	14X1.5		
320i	*11/32/51, AA31, AD31, 14/32/51*	E	1991	M20B/20M1.Z7/20		M	+		09/82 ▸ 09/87	61311364273	**820205**	95		100		14X1.5		
320i	*1442, AA41, AD41, 11/42*	E	1991	M20B20		A	+		09/82 ▸ 09/87	61311364273	**820205**	95		100		14X1.5		
325i,325iX	*11/11/12, 12/31/32/71/91 14/11/12, 15/31/32/71/91 BB/11/12/31/32*	E	2494	M20B/25M/G/25ME/25M1.Z7/ 25M1.Z7/25M/G		M	+/-		09/85 ▸ 12/92	61311364272	**820259**	90		97		14X1.5		

• **New** Nouveau **Nuevo** Novo **Nuovo** Nieuw **Neu** Yeni Новый Nou

Valeo

Thermoswitch
Thermocontact
Termocontacto
Termocontato
Termocontatto
Thermokontakt
Thermoschalter

Włącznik wentylatora
Tepelný spínač
Termokapcsoló
Termocontact
Fan müşiri
ТЕРМОДАТЧИК

BMW (.../...)

3 series E30 (.../...)

325i,325i Touring,325iX 325iX Touring	*11/11/12, 12/31/32/71/91 14/11/12, 15/31/32/71/9 AG/51/52/95, BB/11/12/31 32*	E	2494	M20B//25M1.Z7/25ME/25M/G// 25M1.Z7/25M/G	M	+/-		03/86 ▸ 09/93	61311378073	**820220**	85	93	90	98	14X1.5	
325i,325iX	*11/21/22, 12/01/41/42/81 14/21/22, 15/01/41/42/81 BB/21/22/41/42*	E	2494	M20B/25M1.Z7/25M/G/25ME/ 25M1.Z7/25M/G	A	+/-		09/85 ▸ 12/92	61311364272	**820259**	90		97		14X1.5	
325i,325i Touring,325iX 325iX Touring	*11/21/22, 12/01/41/42/81 14/21/22, 15/01/41/42/81 AG/05/61/62, BB/21/22/41 42*	E	2494	M20B//25M1.Z7/25ME/25M/G// 25M/G/25M1.Z7	A	+/-		02/86 ▸ 09/93	61311378073	**820220**	85	93	90	98	14X1.5	
325i,325iX	*11/11/12, 12/31/32/71/91 14/11/12, 15/31/32/71/91*	E	2494	M20B/25M1.Z7/25ME/25M/G	M	+		09/85 ▸ 03/91	61311364273	**820205**	95		100		14X1.5	
325i,325iX	*11/21/22, 12/01/41/42/81 14/21/22, 15/01/41/42/81*	E	2494	M20B/25M1.Z7/25M/G/25ME	A	+		09/85 ▸ 03/91	61311364273	**820205**	95		100		14X1.5	
325e	*12/51/52, 15/51/52*	E	2692	M20B27M1.Z7	M	+/-		02/85 ▸ 08/87	61311378073	**820220**	85	93	90	98	14X1.5	
325e	*12/51/52, 15/51/52*	E	2692	M20B27M1.Z7	M	+		02/85 ▸ 08/87	61311364272	**820259**	90		97		14X1.5	
325e	*15/61/62*	E	2692	M20B27M1.Z7	A	+		02/85 ▸ 08/87	61311364272	**820259**	90		97		14X1.5	
325e	*15/61/62*	E	2692	M20B27M1.Z7	A			02/85 ▸ 08/87	61311378073	**820220**	85	93	90	98	14X1.5	
325e	*12/61/62*	E	2693	M20B27ME	A	+		02/85 ▸ 08/87	61311364272	**820259**	90		97		14X1.5	
325e	*12/61/62*	E	2693	M20B27ME	A			02/85 ▸ 08/87	61311378073	**820220**	85	93	90	98	14X1.5	
325e	*12/51/52, 15/51/52*	E	2693	M20B27M1.Z7	M	+		02/85 ▸ 08/87	61311364273	**820205**	95		100		14X1.5	
325e	*12/61/62, 15/61/62*	E	2693	M20B/27ME/27M1.Z7	A	+		02/85 ▸ 08/87	61311364273	**820205**	95		100		14X1.5	
324d,324td	*AD91, AE11*	D	2443	M21D/24W/24WA	M	+/-		09/85 ▸ 12/91	61311364272	**820259**	90		97		14X1.5	
324d,324td,324td Touring	*AE11, AH91, AD/91*	D	2443	M21D/24WA/24W	M	+		09/87 ▸ 09/93	61311378073	**820220**	85	93	90	98	14X1.5	
324d,324td	*AD01, AE21*	D	2443	M21D/24W/24WA	A	+/-		09/85 ▸ 12/91	61311364272	**820259**	90		97		14X1.5	
324d,324td,324td Touring	*AE21, AH01, AD/01*	D	2443	M21D/24W/24WA	A	+		09/87 ▸ 09/93	61311378073	**820220**	85	93	90	98	14X1.5	
324d	*AE11*	D	2443	M21D24W	M	+		09/85 ▸ 12/91	61311364273	**820205**	95		100		14X1.5	
324td	*AD91*	D	2443	M21D24WA	M			09/87 ▸ 12/91	61311364273	**820205**	95		100		14X1.5	
324d	*AE21*	D	2443	M21D24W	A	+		09/85 ▸ 12/91	61311364273	**820205**	95		100		14X1.5	
324td	*AD01*	D	2443	M21D24WA	A			09/87 ▸ 12/91	61311364273	**820205**	95		100		14X1.5	

3 series E36

316i	*BE/11/12, CA/71/72, CE/11/12*	E	1596	M43B16	M	+/-		09/93 ▸	61318363677	**820316**	91		99	0	14X1.5	
316i	*BE/11/12, CA/11/12/71/72, CE/11/12*	E	1596	M43B16, M40B16ME.8	M			12/90 ▸	61311378073	**820220**	85	93	90	98	14X1.5	
316i	*CA/71/72, CG/10/11/12/16/18*	E	1596	M43B16	M			10/93 ▸ 04/01	61318376440	**820319**	80		88		14X1.5	
316i	*BE/21/22, CA/81/82, CE/21/22*	E	1596	M43B16	A	+/-		09/93 ▸	61318363677	**820316**	91		99	0	14X1.5	
316i	*BE/21/22, CA/21/22/81/82, CE/21/22*	E	1596	M43B16, M40B16ME.8	A			04/91 ▸	61311378073	**820220**	85	93	90	98	14X1.5	
316i	*CA/81/82, CG/20/21/22/26/28*	E	1596	M43B16	A			10/93 ▸ 04/01	61318376440	**820319**	80		88		14X1.5	
318i,318iS	*BE/51/52, CA/91/92, CE/31 32*	E	1796	M43B18, M42B18	M	+/-		01/92 ▸	61318363677	**820316**	91		99	0	14X1.5	
318i,318iS	*BE/51/52, BH/31/32, CA/31 32/51/52/91/92, CE/31/32*	E	1796	M43B///18, M42B///18, M40B18	M			12/90 ▸	61311378073	**820220**	85	93	90	98	14X1.5	
318i,318iS,318ti	*CA/51/52/91/92, CG/51/52*	E	1796	M42B18, M43B18	M			08/93 ▸ 02/98	61318376440	**820319**	80		88		14X1.5	
318i,318iS	*BE/61/62, CA/01/02, CE/41 42*	E	1796	M43B18, M42B18	A	+/-		01/92 ▸	61318363677	**820316**	91		99	0	14X1.5	
318i,318iS	*BE/61/62, BH/41/42, CA/01 02/41/42/61/62, CE/41/42*	E	1796	M42B///18, M40B///18, M43B18	A			01/91 ▸	61311378073	**820220**	85	93	90	98	14X1.5	
318i,318iS,318ti	*CA/01/02/61/62, CG/61/62*	E	1796	M43B18, M42B18	A			09/93 ▸ 02/98	61318376440	**820319**	80		88		14X1.5	
318iS	*BE71*	E	1895	M44B19	M	+/-		12/95 ▸	61318363677	**820316**	91		99	0	14X1.5	
316i,318iS,318ti	*CG/71/72, CS//10/11/12/15 16/17/18*	E	1895	M43B/19-E46G/19-E46, M44B19	M	+/-		01/96 ▸ 02/98	61318376440	**820319**	80		88		14X1.5	
318iS		E	1895	M44B19	M			12/95 ▸	61311378073	**820220**	85	93	90	98	14X1.5	
318iS		E	1895	M44B19	A	+/-		12/95 ▸	61318363677	**820316**	91		99	0	14X1.5	
316i,318iS,318ti	*CG/81/82, CS/20/21/22/28*	E	1895	M44B19, M43B19-E46	A	+/-		01/96 ▸ 02/98	61318376440	**820319**	80		88		14X1.5	
318iS		E	1895	M44B19	A			12/95 ▸	61311378073	**820220**	85	93	90	98	14X1.5	
316i	*CS//10/11/12/15/16/17/18*	E	1895	M43B/19-E46/19-E46G	M	+		01/99 ▸ 04/01	61318386135	**820318**	80		99		14X1.5	
316i	*CS/20/21/22/28*	E	1895	M43B19-E46	A	+		01/99 ▸ 04/01	61318386135	**820318**	80		99		14X1.5	
320i	*BF/11/12/51, BJ/11/12/31/32, CB/11 12/51/52, CE/51/52*	E	1991	M52B20, M50B20	M			12/90 ▸	61311378073	**820220**	85	93	90	98	14X1.5	
320i	*BF/51, BJ/31/32, CB/51/52, CE/51/52*	E	1991	M52B20	M			06/94 ▸	61318363677	**820316**	91		99	0	14X1.5	
320i	*BF/21/22/61, BJ/21/22/41/42, CB/21 22/61/62, CE/61/62*	E	1991	M50B20, M52B20	A			12/90 ▸	61311378073	**820220**	85	93	90	98	14X1.5	
320i	*BF/61, BJ/41/42, CB/61/62, CE/61/62*	E	1991	M52B20	A			06/94 ▸	61318363677	**820316**	91		99	0	14X1.5	

• **New** Nouveau **Nuevo** Novo **Nuovo** Nieuw **Neu** Yeni Новый Nou

		Type Ctr.		CC			AC			OE	Valeo	(°)C T1	T2	T3	T4	COD.	☼: mm	
BMW (.../...)																		
3 series E36 (.../...)																		
323i,325i	BF/31/32/71/72, BJ/51/52 71, CB/31/32/71/72, CE/71 72	E	2494	M50B25, M52B25	M			12/90 ▸		61311378073	**820220**	85	93	90	98	14X1.5		
323i,323ti	BJ71, BF/71/72, CB/71/72 CG31, CT31, CE/71/72	E	2494	M52B/25-EU3/25	M			03/95 ▸		61318363677	**820316**	91		99	0	14X1.5		
323ti	CG31, CT31	E	2494	M52B/25-EU3/25	M			08/97 ▸ 04/01		61318376440	**820319**	80		88		14X1.5		
323i,325i	BF/41/42/81/82, BJ/61/62 81/82, CB/41/42/81/82, CE 81/82	E	2494	M52B25, M50B25	A			12/90 ▸		61311378073	**820220**	85	93	90	98	14X1.5		
323i,323ti	BF/81/82, BJ/81/82, CB/81 82, CG41, CT41, CE/81/82	E	2494	M52B/25/25-EU3	A			03/95 ▸		61318363677	**820316**	91		99	0	14X1.5		
323ti	CG41, CT41	E	2494	M52B/25-EU3/25	A			08/97 ▸ 04/01		61318376440	**820319**	80		88		14X1.5		
328i	BG/10/11/12, BK/71/72, CD/11/12, CF 11/12	E	2793	M52B28	M			01/95 ▸		61311378073	**820220**	85	93	90	98	14X1.5		
328i	BG/10/11/12, BK/71/72, CD/11/12, CF 11/12	E	2793	M52B28	M			01/95 ▸		61318363677	**820316**	91		99	0	14X1.5		
328i	BG/21/22, BK/81/82, CD/21/22, CF/21 22	E	2793	M52B28	A			01/95 ▸		61311378073	**820220**	85	93	90	98	14X1.5		
328i	BG/21/22, BK/81/82, CD/21/22, CF/21 22	E	2793	M52B28	A			01/95 ▸		61318363677	**820316**	91		99	0	14X1.5		
318tds	CC/51/52, CF/51/52	D	1665	M41D	M			09/94 ▸ 09/99		61311378073	**820220**	85	93	90	98	14X1.5		
318tds	CJ/50/51/52	D	1665	M41D	M			07/95 ▸ 04/01		61318376440	**820319**	80		88		14X1.5		
325td,325tds	CC/11/12/31/32, CF/91/92	D	2497	M51D25, M51A	M			08/91 ▸ 09/99		61311378073	**820220**	85	93	90	98	14X1.5		
325td,325tds	CC/21/22/41/42, CF/01/02	D	2497	M51D25, M51A	A			08/91 ▸ 09/99		61311378073	**820220**	85	93	90	98	14X1.5		
5 series E12																		
520/4,520i	37/11/12/31/32/51/52/71 72	E	1990	M15E12, M17	M			06/72 ▸ 01/79		61311364272	**820259**	90		97		14X1.5		
520/4	37/21/22/61/62	E	1990	M17	A			06/72 ▸ 01/79		61311364272	**820259**	90		97		14X1.5		
525	38/21/22/61/62	E	2494	M125	A			10/73 ▸ 06/81		61311364272	**820259**	90		97		14X1.5		
525	38/11/12/51/52	E	2494	M125	M			10/73 ▸ 06/81		61311364272	**820259**	90		97		14X1.5		
528,528i	39/11/12/51/52/71/72	E	2788	E3, M30B28L	M			01/75 ▸ 05/81		61311364272	**820259**	90		97		14X1.5		
528,528i	39/21/22/61/62/81/82	E	2788	E3, M30B28L	A			01/75 ▸ 05/81		61311364272	**820259**	90		97		14X1.5		
5 series E28																		
520i	4872, 40/31/51/52/71	E	1990	M20B/20K/20M1.Z7	M			04/81 ▸ 08/88		61311364272	**820259**	90		97		14X1.5		
520i	40/61/62/81/82	E	1990	M20B20K	A			09/81 ▸ 08/88		61311364272	**820259**	90		97		14X1.5		
520i	4872, 40/31/51/52/71	E	1991	M20B/20K/20M1.Z7	M			04/81 ▸ 08/88		61311364273	**820205**	95		100		14X1.5		
520i	40/61/62/81/82	E	1991	M20B20K	A			09/81 ▸ 08/88		61311364273	**820205**	95		100		14X1.5		
524d,524td	42/11/91	D	2443	M21D/24W/24WA	M			11/82 ▸ 08/88		61311364272	**820259**	90		97		14X1.5		
524td	4221	D	2443	M21D24WA	A			05/83 ▸ 08/87		61311364272	**820259**	90		97		14X1.5		
524d,524td	42/11/91	D	2443	M21D/24W/24WA	M			11/82 ▸ 08/88		61311364273	**820205**	95		100		14X1.5		
524td	4221	D	2443	M21D24WA	A			05/83 ▸ 08/87		61311364273	**820205**	95		100		14X1.5		
5 series E34																		
518i	HA/11/12/31/32, HG/11/12/31	E	1796	M43B18, M40B18	M	+		09/89 ▸ 09/96		61311378073	**820220**	85	93	90	98	14X1.5		
518i	HA/21/22/41/42	E	1796	M43B18, M40B18	A	+		10/93 ▸ 09/95		61311378073	**820220**	85	93	90	98	14X1.5		
520i	HB/11/12/31/32	E	1990	M20B/20M0.E8/20M1.Z7	M	+		01/88 ▸ 07/90		61311378073	**820220**	85	93	90	98	14X1.5		
520i	HB/21/22/41/42	E	1990	M20B/20M1.Z7/20M0.E8	A	+		01/88 ▸ 07/90		61311378073	**820220**	85	93	90	98	14X1.5		
520i	HB/51/52, HG/51/52	E	1991	M50B20	M	+		03/90 ▸ 09/96		61311378073	**820220**	85	93	90	98	14X1.5		
520i	HB/61/62, HG/61/62	E	1991	M50B20	A	+		03/90 ▸ 09/96		61311378073	**820220**	85	93	90	98	14X1.5		
525i,525iX	HC/11/12/13, HD/51/52/71 72, HJ/51/52/71/72	E	2494	M50B25, M20B25	M	+		02/88 ▸ 09/96		61311378073	**820220**	85	93	90	98	14X1.5		
525i,525iX	HC/21/22/23, HD/61/62/81 82, HJ/61/62/81/82	E	2494	M50B25, M20B25	A	+		02/88 ▸ 09/96		61311378073	**820220**	85	93	90	98	14X1.5		
530i	HC/51/52	E	2986	M30B30M.E7	M	+		01/88 ▸ 04/90		61311378073	**820220**	85	93	90	98	14X1.5		
530i	HC/61/62	E	2986	M30B30M.E7	A	+		01/88 ▸ 06/90		61311378073	**820220**	85	93	90	98	14X1.5		
530i	HE/11/12, HK/11/12	E	2997	M60B30	M	+		09/92 ▸ 09/96		61311378073	**820220**	85	93	90	98	14X1.5		
530i	HE/21/22, HK/21/22	E	2997	M60B30	A	+		09/92 ▸ 09/96		61311378073	**820220**	85	93	90	98	14X1.5		
535i	HD/11/12/13	E	3430	M30B/35M7/34M	M	+		11/87 ▸ 04/93		61311378073	**820220**	85	93	90	98	14X1.5		
535i	HD/21/22/23	E	3430	M30B/35M7/34M	A	+		11/87 ▸ 04/93		61311378073	**820220**	85	93	90	98	14X1.5		
540i	HE/51/52, HK/31/32	E	3982	M60B40	M	+		07/93 ▸ 09/96		61311378073	**820220**	85	93	90	98	14X1.5		
540i	HE/61/62, HK/41/42	E	3982	M60B40	A	+		09/92 ▸ 09/96		61311378073	**820220**	85	93	90	98	14X1.5		
524td	HA51	D	2443	M21D24WA	M	+		03/88 ▸ 08/91		61311378073	**820220**	85	93	90	98	14X1.5		

• **New** Nouveau **Nuevo** Novo **Nuovo** Nieuw **Neu** Yeni Новый Nou

Valeo

Thermoswitch
Thermocontact
Termocontacto
Termocontato
Termocontatto
Thermokontakt
Thermoschalter

Włącznik wentylatora
Tepelný spínač
Termokapcsoló
Termocontact
Fan müşiri
ТЕРМОДАТЧИК

			Type Ctr.		cc			AC			OE	Valeo	(°)C T1	T2	T3	T4	COD.	mm
BMW (.../...)																		
5 series E34 (.../...)																		
524td	*HA61*	D		2443	M21D24WA	A	+		03/88 ▸ 08/91	61311378073	**820220**	85	93	90	98	14X1.5	
525td,525tds	*HA/71/72/91/92, HG/71/72 91*	D		2497	M51D25, M51A	M	+		08/91 ▸ 09/96	61311378073	**820220**	85	93	90	98	14X1.5	
525td,525tds	*HA/01/02/81/82, HG/01/81 82*	D		2497	M51A, M51D25	A	+		08/91 ▸ 09/96	61311378073	**820220**	85	93	90	98	14X1.5	
5 series E39																		
520i	*DD/11/12*	E		1991	M52B20	M	+		07/96 ▸	61318363677	**820316**	91		99	0	14X1.5	
520i	*DD/21/22*	E		1991	M52B20	A	+		07/96 ▸	61318363677	**820316**	91		99	0	14X1.5	
520i	*DD/11/12*	E		1991	M52B20	M	-		07/96 ▸ 09/98	61318360857	**820317**	91		104		14X1.5	
520i	*DH/11/12, DM/10/11, DR/10/11*	E		1991	M52B20	M			01/97 ▸ 04/04	61318360857	**820317**	91		104		14X1.5	
520i	*DD/21/22*	E		1991	M52B20	A	-		07/96 ▸ 09/98	61318360857	**820317**	91		104		14X1.5	
520i	*DH/21/22, DM/20/21*	E		1991	M52B20	A			01/97 ▸ 04/03	61318360857	**820317**	91		104		14X1.5	
523i	*DD/31/32*	E		2494	M52B25	M	+		09/95 ▸	61318363677	**820316**	91		99	0	14X1.5	
523i	*DD/41/42*	E		2494	M52B25	A	+		10/95 ▸	61318363677	**820316**	91		99	0	14X1.5	
523i	*DD/31/32*	E		2494	M52B25	M	-		09/95 ▸ 09/98	61318360857	**820317**	91		104		14X1.5	
523i	*DH/31/32, DM/30/31, DR/30/31*	E		2494	M52B25	M			01/97 ▸ 04/04	61318360857	**820317**	91		104		14X1.5	
523i	*DD/41/42*	E		2494	M52B25	A	-		10/95 ▸ 09/98	61318360857	**820317**	91		104		14X1.5	
523i	*DH/41/42, DM/40/41, DR/40/41*	E		2494	M52B25	A			01/97 ▸ 04/04	61318360857	**820317**	91		104		14X1.5	
528i	*DD/51/52*	E		2793	M52B28	M	+		09/95 ▸	61318363677	**820316**	91		99	0	14X1.5	
528i	*DD/60/61/62*	E		2793	M52B28	A	+		09/95 ▸	61318363677	**820316**	91		99	0	14X1.5	
528i	*DD/51/52*	E		2793	M52B28	M	-		09/95 ▸ 09/98	61318360857	**820317**	91		104		14X1.5	
528i	*DH/51/52, DM/51/58, DP/50/58*	E		2793	M52B28	M			01/97 ▸ 04/04	61318360857	**820317**	91		104		14X1.5	
528i	*DD/60/61/62*	E		2793	M52B28	A	-		09/95 ▸ 09/98	61318360857	**820317**	91		104		14X1.5	
528i	*DH/61/62, DM/61/68, DP/60/68*	E		2793	M52B28	A			01/97 ▸ 04/04	61318360857	**820317**	91		104		14X1.5	
535i	*DN11, DE/11/12*	E		3498	M62B35	M			07/96 ▸ 04/03	61318360857	**820317**	91		104		14X1.5	
535i	*DN21, DE/21/22*	E		3498	M62B35	A			07/96 ▸ 04/03	61318360857	**820317**	91		104		14X1.5	
540i	*DE/51/52, DN51, DR51, DJ/51/52*	E		4398	448S/1/2	M			07/96 ▸ 04/04	61318360857	**820317**	91		104		14X1.5	
540i	*DE/61/62, DJ/61/62, DR61, DN/61/81*	E		4398	448S/2/1	A			07/96 ▸ 04/04	61318360857	**820317**	91		104		14X1.5	
525Td,525Tds	*DF/50/51/70/71/72/78, DG 70/71/78, DJ/71/72*	D		2497	M51D25	M	+/-		10/95 ▸	61318363677	**820316**	91		99	0	14X1.5	
525tds	*DF/80/81/82/88, DG/80/81 88, DJ/81/82*	D		2497	M51D25	A	+/-		10/95 ▸	61318363677	**820316**	91		99	0	14X1.5	
6 series E24																		
628	*EA71, 51/31/32/72*	E		2788	M30B28LE	M			09/79 ▸ 09/86	61311364272	**820259**	90		97		14X1.5	
628	*EA71, 51/31/32/72*	E		2788	M30B28LE	M			09/86 ▸ 08/88	61311378073	**820220**	85	93	90	98	14X1.5	
628	*EA81, 51/41/42/82*	E		2788	M30B28LE	A			09/79 ▸ 09/86	61311364272	**820259**	90		97		14X1.5	
628	*EA81, 51/41/42/82*	E		2788	M30B28LE	A			09/86 ▸ 08/88	61311378073	**820220**	85	93	90	98	14X1.5	
628	*EA71, 51/31/32/72*	E		2788	M30B28LE	M			09/79 ▸ 09/86	61311364273	**820205**	95		100		14X1.5	
628	*EA81, 51/41/42/82*	E		2788	M30B28LE	A			09/79 ▸ 09/86	61311364273	**820205**	95		100		14X1.5	
630	*5111, 5221*	E		2986	M30B30M	M			02/76 ▸ 08/79	61311364272	**820259**	90		97		14X1.5	
630	*51/21/22*	E		2986	M30B30M	A			02/76 ▸ 08/79	61311364272	**820259**	90		97		14X1.5	
630	*5111, 5221*	E		2986	M30B30M	M			02/76 ▸ 08/79	61311364273	**820205**	95		100		14X1.5	
630	*51/21/22*	E		2986	M30B30M	A			02/76 ▸ 08/79	61311364273	**820205**	95		100		14X1.5	
633	*52/31/32*	E		3210	M30B32L	M			01/76 ▸ 12/81	61311364272	**820259**	90		97		14X1.5	
633	*52/41/42*	E		3210	M30B32L	A			07/76 ▸ 12/81	61311364272	**820259**	90		97		14X1.5	
633	*52/31/32*	E		3210	M30B32L	M			01/76 ▸ 12/81	61311364273	**820205**	95		100		14X1.5	
633	*52/41/42*	E		3210	M30B32L	A			07/76 ▸ 12/81	61311364273	**820205**	95		100		14X1.5	
635,M635	*EC71, 53/51/52/72*	E		3430	M30B/34M/35M.E7	M			05/82 ▸ 09/86	61311364272	**820259**	90		97		14X1.5	
635,M635	*EC71, 53/51/52/72*	E		3430	M30B/34M/35M.E7	M			09/86 ▸ 04/89	61311378073	**820220**	85	93	90	98	14X1.5	
635,M635	*EC81, 53/61/62/82*	E		3430	M30B/34M/35M.E7	A			05/82 ▸ 09/86	61311364272	**820259**	90		97		14X1.5	
635,M635	*EC81, 53/61/62/82*	E		3430	M30B/35M.E7/34M	A			09/86 ▸ 04/89	61311378073	**820220**	85	93	90	98	14X1.5	
635,M635	*EC71, 53/51/52/72*	E		3430	M30B/34M/35M.E7	M			05/82 ▸ 09/86	61311364273	**820205**	95		100		14X1.5	
635,M635	*EC81, 53/61/62/82*	E		3430	M30B/34M/35M.E7	A			05/82 ▸ 09/86	61311364273	**820205**	95		100		14X1.5	
635,M635	*53/32, EE31, 55/31/32*	E		3453	M30B35L, M88/3	M			06/78 ▸ 09/86	61311364272	**820259**	90		97		14X1.5	
M635	*55/31/32*	E		3453	M88/3	M			09/86 ▸ 04/89	61311378073	**820220**	85	93	90	98	14X1.5	
635	*53/41/42*	E		3453	M30B35L	A			09/79 ▸ 08/82	61311364272	**820259**	90		97		14X1.5	
635,M635	*53/32, EE31, 55/31/32*	E		3453	M30B35L,M88/3	M			06/78 ▸ 09/86	61311364273	**820205**	95		100		14X1.5	
635	*53/41/42*	E		3453	M30B35L	A			09/79 ▸ 08/82	61311364273	**820205**	95		100		14X1.5	
7 series E23																		
728iS	*FD71, 64/31/71*	E		2494	M30B25L	M			09/81 ▸ 04/86	61311364272	**820259**	90		97		14X1.5	
728iS	*64/41/81*	E		2494	M30B25L	A			11/81 ▸ 04/86	61311364272	**820259**	90		97		14X1.5	

• **New** Nouveau **Nuevo** Novo **Nuovo** Nieuw **Neu** Yeni Новый Nou

			Type Ctr.		CC			AC			OE	Valeo	(°)C T1	T2	T3	T4	COD.	☼: mm	
BMW (.../...)																				
7 series E23 (.../...)																				
728iS	FD71, 64/31/71	E		2494	M30B25L	M			09/81 ▸ 04/86	61311364273		**820205**	95		100		14X1.5		
728iS	64/41/81	E		2494	M30B25L	A			11/81 ▸ 04/86	61311364273		**820205**	95		100		14X1.5		
728,728i	65/11/12/31/32/71/72	E		2788	M30B28LE, M128	M			05/77 ▸ 04/86	61311364272		**820259**	90		97		14X1.5		
728,728i	65/21/22/41/42/81/82	E		2788	M128, M30B28LE	A			04/77 ▸ 05/86	61311364272		**820259**	90		97		14X1.5		
728,728i	65/11/12/31/32/71/72	E		2788	M128,M30B28LE	M			05/77 ▸ 04/86	61311364273		**820205**	95		100		14X1.5		
728,728i	65/21/22/41/42/81/82	E		2788	M128,M30B28LE	A			04/77 ▸ 05/86	61311364273		**820205**	95		100		14X1.5		
730	66/11/12	E		2986	M30B30	M			07/77 ▸ 08/79	61311364272		**820259**	90		97		14X1.5		
730	66/21/22	E		2986	M30B30	A			07/77 ▸ 08/79	61311364272		**820259**	90		97		14X1.5		
730	66/11/12	E		2986	M30B30	M			07/77 ▸ 08/79	61311364273		**820205**	95		100		14X1.5		
730	66/21/22	E		2986	M30B30	A			07/77 ▸ 08/79	61311364273		**820205**	95		100		14X1.5		
732i,733i	66/31/32/34/71/72/74, 67 31/32	E		3210	M30B/32L/32M	M			03/77 ▸ 04/86	61311364272		**820259**	90		97		14X1.5		
732i,733i,745i	66/41/42/44/47/49/81/82 84/89, 67/41/42/45/46, 69 41/81	E		3210	M30B/32L/32M/32LA	A			03/77 ▸ 05/86	61311364272		**820259**	90		97		14X1.5		
732i,733i	66/31/32/34/71/72/74, 67 31/32	E		3210	M30B/32M/32L	M			03/77 ▸ 04/86	61311364273		**820205**	95		100		14X1.5		
732i,733i,745i	66/41/42/44/47/49/81/82 84/89, 67/41/42/45/46, 69 41/81	E		3210	M30B/32M/32L/32LA	A			03/77 ▸ 05/86	61311364273		**820205**	95		100		14X1.5		
745i	69/61/91	E		3430	M30B34MA	A			01/83 ▸ 05/86	61311364272		**820259**	90		97		14X1.5		
735i	FH71, 68/51/72	E		3430	M30B/35M.E7/34M	M			09/82 ▸ 05/86	61311364273		**820205**	95		100		14X1.5		
735i,745i	67/21, 68/61/82, FG81 FH81, 69/61/91	E		3430	M30B/34MA/35M.E7/34M	A			09/82 ▸ 05/86	61311364273		**820205**	95		100		14X1.5		
735i	68/31/32	E		3453	M30B35L	M			09/79 ▸ 09/82	61311364273		**820205**	95		100		14X1.5		
735i	68/41/42	E		3453	M30B35L	A			09/79 ▸ 09/82	61311364273		**820205**	95		100		14X1.5		
7 series E32																				
730i	GA/31/32/71/72, GC/21/22	E		2986	M30B/30M/30M.E7	M			09/86 ▸ 03/94	61311378073		**820220**	85	93	90	98	14X1.5		
730i	GA/41/42/81/82	E		2986	M30B/30M.E7/30M	A			09/86 ▸ 03/94	61311378073		**820220**	85	93	90	98	14X1.5		
730i	GD/11/51	E		2997	M60B30	M			04/92 ▸ 05/94	61311378073		**820220**	85	93	90	98	14X1.5		
730i	GD/21/22/61/62	E		2997	M60B30	A			04/92 ▸ 05/94	61311378073		**820220**	85	93	90	98	14X1.5		
735i	GB/31/32/33/51/52, GC/31/51/52	E		3430	M30B/35/34M/35M.E7	M			09/86 ▸ 06/92	61311378073		**820220**	85	93	90	98	14X1.5		
735i	GB/41/42/43/61/62, GC/41/42/43/61 62	E		3430	M30B/35/35M.E7/34M	A			09/86 ▸ 07/92	61311378073		**820220**	85	93	90	98	14X1.5		
740i	GD/41/42/81/82	E		3982	M60B40	A			09/92 ▸ 05/94	61311378073		**820220**	85	93	90	98	14X1.5		
750i	GB/81/82, GC/81/82/83	E		4988	M70B50	A			11/86 ▸ 05/94	61311378073		**820220**	85	93	90	98	14X1.5		
7 series E38																				
728i	GE/11/30/31	E		2793	M52B28	M			07/95 ▸ 08/01	61318360857		**820317**	91		104		14X1.5		
728i	GH41, GE/21/22/40/41/42	E		2793	M52B28	A			07/95 ▸ 08/01	61318360857		**820317**	91		104		14X1.5		
730i	GF11, GJ11	E		2997	M60B30	M			06/94 ▸ 08/01	61318360857		**820317**	91		104		14X1.5		
730i	GF21, GJ21	E		2997	M60B30	A			06/94 ▸ 08/01	61318360857		**820317**	91		104		14X1.5		
735i	GF31, GJ31	E		3498	M62B35	M			04/96 ▸ 08/01	61318360857		**820317**	91		104		14X1.5		
735i	GF41, GJ41	E		3498	M62B35	A			04/96 ▸ 08/01	61318360857		**820317**	91		104		14X1.5		
740i	GF51	E		3982	M60B40	M			06/94 ▸ 03/96	61318360857		**820317**	91		104		14X1.5		
740i	GF61, GJ61	E		3982	M60B40	A			06/94 ▸ 03/96	61318360857		**820317**	91		104		14X1.5		
740i	GF71, GJ71	E		4398	448S1	M			04/96 ▸ 08/01	61318360857		**820317**	91		104		14X1.5		
740i	GF81, GJ81	E		4398	448S1	A			04/96 ▸ 08/01	61318360857		**820317**	91		104		14X1.5		
750i	GG21, GK21	E		5379	M73B54	A			06/94 ▸ 08/01	61318360857		**820317**	91		104		14X1.5		
725Tds	GE91	D		2497	M51D25	M			04/96 ▸ 08/01	61318363677		**820316**	91		99	0	14X1.5		
725Tds	GE01	D		2497	M51D25	A			04/96 ▸ 08/01	61318363677		**820316**	91		99	0	14X1.5		
730d	GE/60/61	D		2926	M57D30	A			09/98 ▸ 03/00	61318360857		**820317**	91		104		14X1.5		
8 series E31																				
840	EF51	E		3982	M60B40	M	+		03/94 ▸ 07/96	61311378073		**820220**	85	93	90	98	14X1.5		
840	EF/61/62	E		3982	M60B40	A	+		12/92 ▸ 07/96	61311378073		**820220**	85	93	90	98	14X1.5		
840	EF/71/72	E		4398	M62B44	M	+		03/96 ▸	61311378073		**820220**	85	93	90	98	14X1.5		
840	EF/81/82	E		4398	M62B44	A	+		03/96 ▸	61311378073		**820220**	85	93	90	98	14X1.5		
850	EG/11/12	E		4988	M70B50	M	+		09/89 ▸ 08/94	61311378073		**820220**	85	93	90	98	14X1.5		
850	EG/21/22	E		4988	M70B50	A	+		09/89 ▸ 08/94	61311378073		**820220**	85	93	90	98	14X1.5		
850	EG41	E		5379	M73B54	A	+		09/94 ▸	61311378073		**820220**	85	93	90	98	14X1.5		

• **New** Nouveau **Nuevo** Novo **Nuovo** Nieuw **Neu** Yeni Новый Nou

		Type Ctr.		cc			AC		2 3	OE	Valeo	(°)C T1	T2	T3	T4	COD.	mm		
BMW **(.../...)**																			
8 series E31 (.../...)																			
850	*EG/91/92*	E	5576	S70B56	M	+		09/92 ▸ 07/96	61311378073	**820220**	85	93	90	98	14X1.5		
M3 E30																			
2.3 i	*1001, AK01*	E	2302	S14B23	M			09/86 ▸ 03/87	61311364272	**820259**	90		97		14X1.5		
2.3 i	*AK01, 10/01, BB/01/05*	E	2302	S14B23	M			03/87 ▸ 06/91	61311378073	**820220**	85	93	90	98	14X1.5		
2.5 i	*1007*	E	2467	S14B25	M			01/90 ▸ 03/90	61311378073	**820220**	85	93	90	98	14X1.5		
M3 E36																			
3.0 i	*BF/91/92/99, BJ/91/92, CB/91/92*	E	2990	S50B/30/30GT	M			06/92 ▸	61311378073	**820220**	85	93	90	98	14X1.5		
3.2 i	*BK91, BG/91, CD/91/92*	E	3201	S50B32	M			07/95 ▸	61318363677	**820316**	91		99	0	14X1.5		
3.2 i	*BG91, BK91*	E	3201	S50B32	M			10/95 ▸	61311378073	**820220**	85	93	90	98	14X1.5		
M5 E34																			
3.6 i	*HD/91/92*	E	3535	S38B36M	M			07/88 ▸ 12/91	61311378073	**820220**	85	93	90	98	14X1.5		
3.8 i	*HJ91, HC/91/92*	E	3795	S38B38	M			12/91 ▸	61311378073	**820220**	85	93	90	98	14X1.5		
Z3																			
1.8 i	*CJ11*	E	1796	M43B18	M			01/96 ▸ 07/96	61311378073	**820220**	85	93	90	98	14X1.5		
1.8 i	*CJ11*	E	1796	M43B18	M			01/96 ▸ 08/98	61318376440	**820319**	80		88		14X1.5		
1.8 i	*CJ21*	E	1796	M43B18	A			01/96 ▸ 07/96	61311378073	**820220**	85	93	90	98	14X1.5		
1.8 i	*CJ21*	E	1796	M43B18	A			01/96 ▸ 08/98	61318376440	**820319**	80		88		14X1.5		
1.9 i 16V	*CH71*	E	1895	M44B19	M			01/96 ▸ 04/99	61318376440	**820319**	80		88		14X1.5		
1.9 i 16V	*CH71*	E	1895	M44B19	M			01/96 ▸ 07/96	61311378073	**820220**	85	93	90	98	14X1.5		
1.9 i 16V	*CH81*	E	1895	M44B19	A			01/96 ▸ 04/99	61318376440	**820319**	80		88		14X1.5		
1.9 i 16V	*CH81*	E	1895	M44B19	A			01/96 ▸ 07/96	61311378073	**820220**	85	93	90	98	14X1.5		
2.0 i	*CL/31/32*	E	1991	M52B20-EU3	M			04/99 ▸	61318363677	**820316**	91		99	0	14X1.5		
2.0 i	*CL/41/42*	E	1991	M52B20-EU3	A			04/99 ▸	61318363677	**820316**	91		99	0	14X1.5		
2.2 i	*CN/11/12*	E	2171	M54B22	M			08/00 ▸	61318363677	**820316**	91		99	0	14X1.5		
2.2 i	*CN/21/22*	E	2171	M54B22	A			08/00 ▸	61318363677	**820316**	91		99	0	14X1.5		
2.8 i 24V	*CK51, CJ/31/32*	E	2793	M52B28	M			03/96 ▸	61318363677	**820316**	91		99	0	14X1.5		
2.8 i 24V	*CJ/31/32*	E	2793	M52B28	M			03/96 ▸ 05/97	61311378073	**820220**	85	93	90	98	14X1.5		
2.8 i 24V	*CK61, CJ/41/42*	E	2793	M52B28	A			03/96 ▸	61318363677	**820316**	91		99	0	14X1.5		
2.8 i 24V	*CJ/41/42*	E	2793	M52B28	A			03/96 ▸ 05/97	61311378073	**820220**	85	93	90	98	14X1.5		
3.0 i 24V	*CK/71, CN/51/52*	E	2979	M54B30-231	M			06/00 ▸	61318363677	**820316**	91		99	0	14X1.5		
3.0 i 24V	*CK/81, CN/61/62*	E	2979	M54B30-231	A			06/00 ▸	61318363677	**820316**	91		99	0	14X1.5		
3.2 i	*CJ/51/52, CM/91/92*	E	3201	S50B32	M			06/96 ▸	61318363677	**820316**	91		99	0	14X1.5		
3.2 i	*CL/91/92, CN/91/92*	E	3246	S54B32-325	M			04/01 ▸	61318363677	**820316**	91		99	0	14X1.5		
CITROËN																			
AX (86>91)																			
1.0	*ZAZ/A/AB/AT/E/H/HB*	E	954	TU9	M			1991 ▸ 1991	126440	**819752**	92		97		22X1.5	29	
1.0	*ZAZ/A/AB/AE/AR/ART/AT*	E	954	TU9	M			09/86 ▸ 04/87	95632734	**819755**	88	92	93	97	22X1.5	29	
1.0	*ZAZ/A/AB/AE/AR/ART/AT/E/H/HB*	E	954	TU9	M			04/87 ▸ 1991	126421	**819761**	92		97		22X1.5	29	
1.1,1.1 i	*ZAD/A/B/C, ZAZ/B/BT/F/J*	E	1124	TU1, TU1M	M			1991 ▸ 1991	126440	**819752**	92		97		22X1.5	29	
1.1	*ZAZ/B/BD/BT/M/P*	E	1124	TU1, TU1CP	M			09/86 ▸ 04/87	95632734	**819755**	88	92	93	97	22X1.5	29	
1.1,1.1 i	*ZAD/A/B/C, ZAZ/B/BD/BT/F J/JD/M/P/S*	E	1124	TU1CP, TU1, TU1M	M			04/87 ▸ 1991	126421	**819761**	92		97		22X1.5	29	
1.3	*ZAZL*	E	1294	TU24	M			1991 ▸ 1991	126440	**819752**	92		97		22X1.5	29	
1.3	*ZAZL*	E	1294	TU24	M			04/87 ▸ 1991	126421	**819761**	92		97		22X1.5	29	
1.4,1.4 i	*ZAD/D/DB/E/EB, ZAZ/C/D/DD K/KD/Y*	E	1360	TU3S, TU3A, TU3M, TU3	M			1991 ▸ 1991	126440	**819752**	92		97		22X1.5	29	
1.4,1.4 i	*ZAZ/C/R/W*	E	1360	TU3, TU3CP, TU3M, TU3A	M			09/86 ▸ 04/87	95632734	**819755**	88	92	93	97	22X1.5	29	
1.4,1.4 i	*ZAD/D/DB/E/EB, ZAZ/C/CD/D DD/K/KD/N/R/W/X/Y*	E	1360	TU3CP, TU3S, TU3A, TU3M, TU3	M			04/87 ▸ 1991	126421	**819761**	92		97		22X1.5	29	
1.4 D	*ZAZ/T/TT/U/V*	D	1360	TUD3	M			09/88 ▸ 10/90	126440	**819752**	92		97		22X1.5	29	
1.4 D	*ZAZ/T/TT/U/V*	D	1360	TUD3	M			10/90 ▸ 1991	96138637	**819753**	91		93		22X1.5	29	
AX (91>98)																			
1.0,1.0 i	*ZAL/H/J, ZAZ/A/AT/H*	E	954	TU9M, TU9	M			05/91 ▸ 07/98	126440	**819752**	92		97		22X1.5	29	
1.1,1.1 i	*ZALAT, ZAD/A/AB/AC/B/BB BC, ZAZ/B/BT/J*	E	1124	TU1, TU1M	M			05/91 ▸ 07/96	126440	**819752**	92		97		22X1.5	29	

• **New** Nouveau **Nuevo** Novo **Nuovo** Nieuw **Neu** Yeni Новый Nou

		Type Ctr.		CC		AC		2 3	OE	Valeo	(°)C T1	T2	T3	T4	COD.	mm	
CITROËN (.../...)																			
AX (91>98) (.../...)																			
1.4,1.4 i	ZAD/D/DB/E/EB/H/J/M/N ZAL/B/C/F/G, ZAZ/D/Y	E	1360	TU3M, TU3MC, TU3.2, TU3J2 TU3S		M		05/91 ▸ 07/96	126440	**819752**	92		97		22X1.5	29	
1.4 D	ZAD/F/G, ZAZ/T/TT/U	D	1360	TUD3		M		05/91 ▸ 07/94	96138637	**819753**	91		93		22X1.5	29	
1.5 D	ZAK/E/ET/F	D	1527	TUD5		M		07/94 ▸ 07/96	126445	**819747**	92	96	97	101	22X1.5	29	
BX																			
1.4 GPL	XBERBB	G	1360	TU3A		M		07/89 ▸	126414	**819757**	79		88		22X1.5	29	
1.1	XBEP, XBXR	E	1124	TU1, XW7B2		M		09/82 ▸ 1991	126414	**819757**	79		88		22X1.5	29	
1.4,1.4 i	XBFG, XBE/C/R/RB/RBB/S XBH/C/D/Y, XBX/A/D/DA DBC/T/Y/YE	E	1360	XY6D, TU3A, TU3M, XY6C, TU3.2 XY7CP, XY6		M		09/82 ▸	126414	**819757**	79		88		22X1.5	29	
1.6,1.6 GPL,1.6 i	XBE/A/B, XBX/B/E/EBC/K	E	1580	XU5S, XU5J, 171, XU5STR		M		09/82 ▸ 07/86	95576325	**819770**	83	88	87	92	22X1.5	29	
1.6	XBXBAA	E	1580	XU5S		A		07/84 ▸ 07/86	95576325	**819770**	83	88	87	92	22X1.5	29	
1.9,1.9 i	XBE/W, XBX/G/H/J/M/N	E	1905	XU9J1, XU9, XU9S, XU9M, XU92C		M		07/84 ▸	95576325	**819770**	83	88	87	92	22X1.5	29	
1.9 i 16S	XBEJ, XBFC	E	1905	XU9J4		M		07/87 ▸	96019305	**819773**	88	92	93	97	22X1.5	29	
1.9	XBX/GA/HA	E	1905	XU9S, XU92C		A		07/84 ▸ 07/86	95576325	**819770**	83	88	87	92	22X1.5	29	
1.7 D	XBED, XBXP	D	1769	XUD7		M		10/84 ▸ 07/86	95576325	**819770**	83	88	87	92	22X1.5	29	
1.7 D,1.7 TD	XBE/D/K/L/X, XBXP, XBH/R S	D	1769	XUD7, XUD7TE		M		07/86 ▸	96019305	**819773**	88	92	93	97	22X1.5	29	
1.9 D	XBX/C/CE/F/FE	D	1905	XUD9		M		07/83 ▸ 07/86	95576325	**819770**	83	88	87	92	22X1.5	29	
1.9 D	XBH/E/F, XBX/C/CE/CT/F/FB/FE/FT/U/V	D	1905	XUD9A, XUD9		M		07/86 ▸	96019305	**819773**	88	92	93	97	22X1.5	29	
1.9 D	XBXCA	D	1905	XUD9		A		07/83 ▸ 07/86	95576325	**819770**	83	88	87	92	22X1.5	29	
1.9 D	XBX/CA/CAA	D	1905	XUD9A, XUD9		A		07/86 ▸	96019305	**819773**	88	92	93	97	22X1.5	29	
CX																			
2.0	MAM/B/D	E	1985	M20		M		01/75 ▸ 10/78	126414	**819757**	79		88		22X1.5	29	
2.0	MAM/B/D	E	1985	M20		M		10/78 ▸ 06/79	95492854	**819761**	92		97		22X1.5	29	
2.0	MAM/B/D	E	1985	M20		M		02/79 ▸ 06/79	75492645	**819759**	87		92		22X1.5	29	
2.0	MAM/P/R	E	1995	829A5		M		07/79 ▸ 01/81	126414	**819757**	79		88		22X1.5	29	
2.0	MAM/P/R	E	1995	J6RA600, 829A5		M		01/81 ▸ 07/85	75492645	**819759**	87		92		22X1.5	29	
2.0	MAM/P/R	E	1995	J6RA600		M		07/85 ▸ 1989	95576325	**819770**	83	88	87	92	22X1.5	29	
2.2	MANC	E	2165	M22		M		02/75 ▸ 07/76	126414	**819757**	79		88		22X1.5	29	
2.2,2.2 GPL	MAN/R/RBC/S	E	2165	J6TA500		M		07/85 ▸ 1991	95576325	**819770**	83	88	87	92	22X1.5	29	
2.3,2.3 i,2.3 i Injection	MAM/E/F/J/K/L/T/V/X, MAN A/E	E	2347	M23		M		01/76 ▸ 07/83	95492854	**819761**	92		97		22X1.5	29	
2.3	MAM/F/J	E	2347	M23		M		07/76 ▸ 10/78	126414	**819757**	79		88		22X1.5	29	
2.3	MAM/F/J/W/Y	E	2347	M23		M		02/79 ▸ 07/82	75492645	**819759**	87		92		22X1.5	29	
2.5 i,2.5 i Turbo	MAN/G/GA/HH/J/K	E	2500	M25		M		07/83 ▸ 07/85	95492854	**819761**	92		97		22X1.5	29	
2.5 i Turbo,2.5 i Turbo 2	MAN/K/KC/P	E	2500	M25		M		07/85 ▸ 1989	95576325	**819770**	83	88	87	92	22X1.5	29	
2.5 i	MAN/G/GA/HH/J	E	2500	M25		M		07/85 ▸ 1989	75492645	**819759**	87		92		22X1.5	29	
2.2 D	MAN/G/H	D	2165	M22		M		11/75 ▸ 06/79	75492645	**819759**	87		92		22X1.5	29	
2.5 D,2.5 D Turbo	MAM/M/N/S, MAN/B/C/D	D	2500	M25		M		02/79 ▸ 07/85	75492645	**819759**	87		92		22X1.5	29	
2.5 D,2.5 D Turbo	MAM/M/N/S, MAN/B/C/D	D	2500	M25		M		02/79 ▸ 07/85	95492854	**819761**	92		97		22X1.5	29	
2.5 D,2.5 D Turbo 2.5 D Turbo 2	MAM/M/N, MAN/B/C/D/T/U/V	D	2500	M25		M		07/85 ▸ 1991	95576325	**819770**	83	88	87	92	22X1.5	29	
Evasion (94>98)																			
1.8 i	U6UE	E	1761	XU7JP		M		07/96 ▸ 09/98	126440	**819752**	92		97		22X1.5	29	
2.0 i	U6UB	E	1998	XU10J2C		M		07/94 ▸ 09/98	126440	**819752**	92		97		22X1.5	29	
2.0 i Turbo CT	U6UA	E	1998	XU10J2CTEL3		M		07/94 ▸ 09/98	126445	**819747**	92	96	97	101	22X1.5	29	
1.9 TD	U6U/C/J/J/8/J/T	D	1905	XUD9BTF, XUD9TEF, XUD9TF		M		10/94 ▸ 09/98	126444	**819755**	88	92	93	97	22X1.5	29	
1.9 TD	U6U/C/J/J/8/J/T	D	1905	XUD9BTF,XUD9TEF,XUD9TF		M	+/-	10/94 ▸ 09/98	133827	**●820834**			60		14X1.25		
2.1 TD 12V	U6UW	D	2088	XUD11BTE		M		04/96 ▸ 09/98	126444	**819755**	88	92	93	97	22X1.5	29	
2.1 TD 12V	U6UW	D	2088	XUD11BTE		M	+/-	04/96 ▸ 09/98	133827	**●820834**			60		14X1.25		
Evasion (98>2002)																			
1.8 i	U6U/E/E/1	E	1761	XU7JP		M	-	10/98 ▸ 05/02	126440	**819752**	92		97		22X1.5	29	
2.0 i,2.0 i 16V 2.0 i Turbo CT	AFR/FVB, U6U/A/B/B/T	E	1998	XU10J2CTEL3, XU10J2C, XU10J4R		M	-	10/98 ▸ 05/02	126440	**819752**	92		97		22X1.5	29	
2.0 i Turbo CT	U6UA	E	1998	XU10J2CTEL3		M		10/98 ▸ 05/02	126445	**819747**	92	96	97	101	22X1.5	29	
1.9 TD	U6U/C/C/T	D	1905	XUD9BTF		M	-	10/98 ▸ 05/02	126444	**819755**	88	92	93	97	22X1.5	29	
2.1 TD 12V	U6U/W/W/T	D	2088	XUD11BTE		M	-	10/98 ▸ 05/02	126444	**819755**	88	92	93	97	22X1.5	29	
LN/LNA																			
1.0		E	954	XV8		M		01/84 ▸ 1986	126414	**819757**	79		88		22X1.5	29	

• **New** Nouveau **Nuevo** Novo **Nuovo** Nieuw **Neu** Yeni Новый Nou

			Type Ctr.		cc			AC			OE	Valeo	(°)C T1	T2	T3	T4	COD.	mm	
CITROËN (.../...)																			
LN/LNA (.../...)																			
1.1	RBR/G/GA/J/K/KA	E		1124	XW7B1, XW7	M			07/82 ▸ 1986	126414	**819757**	79		88		22X1.5	29
Saxo (96>99)																			
1.0 i	S0C/DYF/DZE/DZF, S3CDZF, S1C/DYF DZE/DZF	E		954	TU9M	M	-		03/96 ▸ 08/99	126440	**819752**	92		97		22X1.5	29
1.1 i,1.1 i GPL	S0H/DYF/DZC/DZE/DZF/DZG DZW, S3HDZF, S1H/DYF/DZC DZE/DZF/DZG/DZW, S6H/DZC DZF	E		1124	TU1M+	M	-		03/96 ▸ 08/99	126440	**819752**	92		97		22X1.5	29
1.4 i	S0K/FWB/FXF/FXG/FXT, S1K/FXF/FXG FXT	E		1360	TU3JP	M	-		03/96 ▸ 08/99	126440	**819752**	92		97		22X1.5	29
1.4 i	S0K/FXD, S1K/FXD/FXT	E		1360	TU3JP	A	-		04/96 ▸ 08/99	126440	**819752**	92		97		22X1.5	29
1.6 i	S0N/FZF/FZT, S6NFZF, S1N/FZF/FZT	E		1587	TU5JP	M	-		03/96 ▸ 08/99	126440	**819752**	92		97		22X1.5	29
1.6 i 16V	S6NFXF	E		1587	TU5J4	M	-		03/96 ▸ 08/99	126445	**819747**	92	96	97	101	22X1.5	29
7431 ▸																			
1.6 i	S0NFZD, S1NFZD	E		1587	TU5JP	A	-		06/96 ▸ 08/99	126440	**819752**	92		97		22X1.5	29
1.5 D	S0V/JXB/JYF/JZC/JZE/JZF, S3VJZF S1V/JXB/JYF/JZC/JZE/JZF	D		1527	TUD5, TUD5B	M	-		05/96 ▸ 08/99	126440	**819752**	92		97		22X1.5	29
1.5 D	S0V/JZE/JZF, S3VJZF, S1V/JZE/JZF	D		1527	TUD5	M			05/96 ▸ 08/99	126445	**819747**	92	96	97	101	22X1.5	29
Saxo (99>)																			
1.0 i	S0CDZF, S1CDZF	E		954	TU9M	M	-		09/99 ▸	126440	**819752**	92		97		22X1.5	29
1.1 i,1.1 i GPL	S0HDZF, S1HDZF	E		1124	TU1M+	M	-		09/99 ▸	126440	**819752**	92		97		22X1.5	29
1.4 i	S0KFXF, S1KFXF	E		1360	TU3JP	M	-		09/99 ▸	126440	**819752**	92		97		22X1.5	29
1.4 i	S1KFXD	E		1360	TU3JP	A	-		09/99 ▸	126440	**819752**	92		97		22X1.5	29
1.6 i	S6NFZF	E		1587	TU5JP	M	-		09/99 ▸	126440	**819752**	92		97		22X1.5	29
1.6 i 16V	S6NFXF	E		1587	TU5J4	M	-		09/99 ▸	126445	**819747**	92	96	97	101	22X1.5	29
1.5 D	S1VJZF, S0V/JZC/JZF	D		1527	TUD5	M	-		09/99 ▸	126445	**819747**	92	96	97	101	22X1.5	29
1.5 D	S1VJZF, S0V/JZC/JZF	D		1527	TUD5	M	-		09/99 ▸	126440	**819752**	92		97		22X1.5	29
Synergie (95>98)																			
1.8 i	U6UE	E		1761	XU7JP	M			07/96 ▸ 09/98	126440	**819752**	92		97		22X1.5	29
2.0 i	U6UB	E		1998	XU10J2C	M			10/95 ▸ 09/98	126440	**819752**	92		97		22X1.5	29
1.9 TD	U6U/C/J	D		1905	XUD9BTF, XUD9TEF	M			10/95 ▸ 09/98	126444	**819755**	88	92	93	97	22X1.5	29
1.9 TD	U6U/C/J	D		1905	XUD9BTF,XUD9TEF	M	+/-		10/95 ▸ 09/98	133827	**●820834**			60		14X1.25	
Synergie (98>2002)																			
2.0 i	U6UB	E		1998	XU10J2C	M			10/98 ▸ 05/02	126440	**819752**	92		97		22X1.5	29
1.9 TD	U6UC	D		1905	XUD9BTF	M			10/98 ▸ 05/02	126444	**819755**	88	92	93	97	22X1.5	29
Visa																			
1.0	VDPC	E		954	XV8	M			11/83 ▸ 1987	126414	**819757**	79		88		22X1.5	29
1.1	VDV/G/GB/GE/K/KB	E		1124	XW7B1, XW7	M			07/83 ▸ 1988	126414	**819757**	79		88		22X1.5	29
1.1	VDV/B/BG/G/GD	E		1124	XW7, XW7B2, XM7, XW7B1	M			10/78 ▸ 1988	126414	**819757**	79		88		22X1.5	29
1.2	VDV/E/H/L	E		1219	129	M			07/80 ▸ 07/83	126414	**819757**	79		88		22X1.5	29
1.4	VDVS, VDP/E/EA	E		1360	XY7, XY8	M			03/82 ▸ 1988	126414	**819757**	79		88		22X1.5	29
1.4,1.4 i	VDV/R/RB	E		1360	150, XY7, XY7CP, 156	M			03/81 ▸ 1987	126414	**819757**	79		88		22X1.5	29
1.6 i	VDPD	E		1580	XU5J	M			10/84 ▸ 05/85	95576325	**819770**	83	88	87	92	22X1.5	29
1.6 i	VDPD	E		1580	XU5J	M			06/85 ▸ 07/86	95630939	**819772**	79	83	84	88	22X1.5	29
1.6 i		E		1580	XU5J	M			01/85 ▸ 05/85	95576325	**819770**	83	88	87	92	22X1.5	29
1.6 i	VDPD	E		1580	XU5J, XU5JA	M			06/85 ▸ 1988	95630939	**819772**	79	83	84	88	22X1.5	29
1.8 D	VDV/T/TA/TE	D		1769	XUD7	M			03/84 ▸ 05/85	95576325	**819770**	83	88	87	92	22X1.5	29
1.8 D	VDV/T/TA/TE	D		1769	XUD7	M			06/85 ▸ 1988	95630939	**819772**	79	83	84	88	22X1.5	29
1.8 D		D		1769	XUD7	M			03/84 ▸ 05/85	95576325	**819770**	83	88	87	92	22X1.5	29
1.8 D		D		1769	XUD7	M			06/85 ▸ 1988	95630939	**819772**	79	83	84	88	22X1.5	29
Xantia (93>97)																			
1.6 i	X12B	E		1580	XU5JP	M			08/93 ▸ 12/97	126440	**819752**	92		97		22X1.5	29
1.8 i	X11/A/E, X16G, X17A, X12/E/F	E		1761	XU7JP, XU7JB	M			03/93 ▸ 12/97	126440	**819752**	92		97		22X1.5	29
1.8 i 16V	X13H, X15C, X16C, X12/H	E		1761	XU7JP4	M			07/95 ▸ 12/97	126443	**819753**	91		93		22X1.5	29
1.8 i	X19B	E		1761	XU7JP	A			09/93 ▸ 12/97	126427	**819754**	79	83	84	88	22X1.5	29
2.0 i 16V	X14F, X13/E, X15/A/F, X19 C/E	E		1998	XU10J4R, XU10J4	M			03/93 ▸ 12/97	126443	**819753**	91		93		22X1.5	29
2.0 i	X14/A/C	E		1998	XU10J2C	M			03/93 ▸ 06/95	126440	**819752**	92		97		22X1.5	29

• **New** Nouveau **Nuevo** Novo **Nuovo** Nieuw **Neu** Yeni Новый Nou

		Type Ctr.		cc		AC			OE	Valeo	(°)C T1	T2	T3	T4	COD.	○: mm	
CITROËN (.../...)																		
Xantia (93>97) (.../...)																		
2.0 i	*X15E, X17B*	E	1998	XU10J2C	A			09/93 ▸ 12/97	126425	**819747**	92	96	97	101	22X1.5	29
1.9 D,1.9 TD	*X16/A, X17/E/E/T/F/T/F X18/A/E*	D	1905	XUD9TEF, XUD9A, XUD9BTF	M			06/93 ▸ 12/97	126444	**819755**	88	92	93	97	22X1.5	29
1.9 SD	*X12D, X14H*	D	1905	XUD9SD	M			09/96 ▸ 12/97	126440	**819752**	92		97		22X1.5	29
1.9 D	*X13/C/L*	D	1905	XUD9A	A			08/93 ▸ 12/97	126444	**819755**	88	92	93	97	22X1.5	29
Xantia (97>2002)																		
1.6 i	*X1BFZF*	E	1580	XU5JP	M	-		12/97 ▸ 05/02	126440	**819752**	92		97		22X1.5	29
1.8 i	*X1LFXF, X2LFXF*	E	1761	XU7JB	M	-		12/97 ▸ 05/02	126440	**819752**	92		97		22X1.5	29
1.8 i 16V,1.8 i GPL 16V	*X1L/FYB/FYC/FYF, X2L/FYB FYC/FYF*	E	1761	XU7JP4	M	-		12/97 ▸ 05/02	126443	**819753**	91		93		22X1.5	29
2.0 i 16V	*X2RFVF, X7RFVF, X1R/FVF FVG*	E	1998	XU10J4R	M	-		12/97 ▸ 05/02	126443	**819753**	91		93		22X1.5	29
2.0 i 16V	*X1RFVU, X2RFVM*	E	1998	XU10J4R	A	-		12/97 ▸ 05/02	126443	**819753**	91		93		22X1.5	29
1.9 SD	*X1DHWF, X2DHWF*	D	1905	XUD9SD	M	-		12/97 ▸ 05/02	126443	**819753**	91		93		22X1.5	29
XM (89>94)																		
2.0,2.0 i	*Y3A/A/B/C/H/J/P/R/Z*	E	1998	XU10M, XU10J2, XU102C	M			05/89 ▸ 06/94	126423	**819751**	86		95		22X1.5	29
2.0 i Turbo CT	*Y3A/X/Y*	E	1998	XU10J2TE	M			09/92 ▸ 06/94	126444	**819755**	88	92	93	97	22X1.5	29
2.0 i	*Y3A/CA/HA/RA*	E	1998	XU10J2	A			01/90 ▸ 06/94	126423	**819751**	86		95		22X1.5	29
2.0 i Turbo CT	*Y3A/XA/YA*	E	1998	XU10J2TE	A			07/92 ▸ 06/94	126444	**819755**	88	92	93	97	22X1.5	29
3.0 i V6,3.0 i V6 24V	*Y3C/M/N/U*	E	2963	ZPJ, ZPJ4	M			05/93 ▸ 06/94	126427	**819754**	79	83	84	88	22X1.5	29
3.0 i V6	*Y3CNA*	E	2963	ZPJ	A			07/93 ▸ 06/94	126427	**819754**	79	83	84	88	22X1.5	29
3.0 i V6,3.0 i V6 24V	*Y3A/D/G/L/W*	E	2975	ZPJ, ZPJ4	M			05/89 ▸ 06/94	126427	**819754**	79	83	84	88	22X1.5	29
3.0 i V6	*Y3A/GA/WA*	E	2975	ZPJ	A			05/90 ▸ 06/94	126427	**819754**	79	83	84	88	22X1.5	29
2.1 TD Turbo D12 12V	*Y3A/F/K/T*	D	2088	XUD11ATE	M			11/89 ▸ 06/94	126444	**819755**	88	92	93	97	22X1.5	29
2.1 TD Turbo D12 12V	*Y3ATA*	D	2088	XUD11ATE	A			07/92 ▸ 06/94	126444	**819755**	88	92	93	97	22X1.5	29
2.1 D D12	*Y3A/E/S*	D	2138	XUD11A	M			09/89 ▸ 06/94	126444	**819755**	88	92	93	97	22X1.5	29
Xsara (97>2000)																		
1.4 i	*N0K/FXB/FXF/FXG, N1K/FXB/FXF/FXG N2K/FXB/FXF*	E	1360	TU3JP	M	+/-		07/97 ▸ 08/00	126440	**819752**	92		97		22X1.5	29
1.6 i	*N0N/FZF, N2NFZF, N1N/FZF/FZG*	E	1587	TU5JP	M	+/-		07/97 ▸ 08/00	126440	**819752**	92		97		22X1.5	29
1.8 i,1.8 i 16V 1.8 i GPL 16V	*N0L/FXF/FYF, N1L/FXF/FYF FZU, N6LFYF, N2L/FXF/FYF*	E	1761	XU7JP4, XU7JB, XU7JP	M	+/-		07/97 ▸ 08/00	126440	**819752**	92		97		22X1.5	29
1.8 i	*N1LFZM, N2LFZM, N0L/FZM*	E	1761	XU7JP	A	+/-		07/97 ▸ 08/00	126445	**819747**	92	96	97	101	22X1.5	29
1.8 i	*N0LFZM*	E	1761	XU7JP	A			01/98 ▸ 08/00	126444	**819755**	88	92	93	97	22X1.5	29
2.0 i 16V	*N6RFSF*	E	1998	XU10J4RS	M			01/98 ▸ 08/00	126440	**819752**	92		97		22X1.5	29
1.5 D	*N1VJZF, N2VJZF*	D	1527	TUD5	M	+/-		03/98 ▸ 08/00	126440	**819752**	92		97		22X1.5	29
1.8 D	*N0A9AF, N2A9AF*	D	1769	XUD7	M	+/-		03/98 ▸ 08/00	126444	**819755**	88	92	93	97	22X1.5	29
1.8 D	*N0A9AF, N2A9AF*	D	1769	XUD7	M			03/98 ▸ 08/00	126440	**819752**	92		97		22X1.5	29
1.9 D	*N1WJZF, N2WJZF, N3WJZF, N0W/JZF*	D	1868	DW8	M			09/98 ▸ 08/00	126440	**819752**	92		97		22X1.5	29
1.9 D,1.9 SD,1.9 TD	*N0D/HYF/JYF, N1D/HYF/JYF N6DHYF, N2D/HVB/HWF/HYF JYF*	D	1905	XUD9TE, XUD9A, XUD9BSD XUD9SD	M	+/-		07/97 ▸ 08/00	126444	**819755**	88	92	93	97	22X1.5	29
1.9 D,1.9 TD	*N1DJYF, N2DJYF, N0D/HYF JYF*	D	1905	XUD9TE, XUD9A	M	+/-		07/97 ▸ 08/00	126440	**819752**	92		97		22X1.5	29
1.9 TD	*N1DHYF, N2DHYF, N6DHYF N0D/HYF*	D	1905	XUD9TE	M	+/-		07/97 ▸ 08/00	133827	**•820834**			60		14X1.25	
Xsara Picasso																		
1.6 i	*CHN/FVB/FZA*	E	1587	TU5JP	M	-		12/99 ▸	126440	**819752**	92		97		22X1.5	29
1.8 i 16V	*CH6/FZB/FZC*	E	1749	EW7J4	M	-		12/99 ▸	126440	**819752**	92		97		22X1.5	29
ZX																		
1.1,1.1 i	*N2C9, N2A/1/3/4/4/T, N2L 2/2/T/3*	E	1124	TU1M, TU1, TU1M+	M			03/91 ▸ 07/98	126440	**819752**	92		97		22X1.5	29
1.4,1.4 i	*N2B1, N2D7, N2A/7/9, N2E 1/T/9, N2M1, N2L/7/9*	E	1360	TU3JP, TU3MC, TU3M, TU3.2	M			03/91 ▸ 07/98	126440	**819752**	92		97		22X1.5	29
1.4	*N2A7*	E	1360	TU3.2	M			03/91 ▸ 08/92	126444	**819755**	88	92	93	97	22X1.5	29
1.6 i	*N2B/2/4/5, N2G/1/2*	E	1580	XU5JP, XU5M, XU5M2	M			03/91 ▸ 07/98	126444	**819755**	88	92	93	97	22X1.5	29
1.6 i	*N2B/2/4/5, N2G/1/2*	E	1580	XU5M, XU5JP, XU5M2	M			03/91 ▸ 07/98	126440	**819752**	92		97		22X1.5	29
1.6 i	*N2B/2/4/5, N2G/1/2*	E	1580	XU5M, XU5M2, XU5JP	M			03/91 ▸ 07/98	126445	**819747**	92	96	97	101	22X1.5	29
1.6 i	*N2B4A, N2G1A*	E	1580	XU5M, XU5JP	A			09/92 ▸ 06/97	126445	**819747**	92	96	97	101	22X1.5	29

• **New** Nouveau **Nuevo** Novo **Nuovo** Nieuw **Neu** Yeni Новый Nou

		Type Ctr.		CC		AC				OE	Valeo	(°)C T1	T2	T3	T4	COD.	mm
CITROËN (.../...)																	
ZX (.../...)																	
1.6 i	*N2B4A, N2G1A*	E	1580	XU5M, XU5JP	A			09/92 ▸ 06/97	126440	**819752**	92		97		22X1.5	29
1.6 i	*N2B4A, N2G1A*	E	1580	XU5M, XU5JP	A			09/92 ▸ 06/97	126444	**819755**	88	92	93	97	22X1.5	29
1.8 i,1.8 i 16V	*N2F2, N2E/3/4, N2K/5/7*	E	1761	XU7JP, XU7JP4	M			09/92 ▸ 07/98	126444	**819755**	88	92	93	97	22X1.5	29
1.8 i,1.8 i 16V	*N2F2, N2E/3/4, N2K/5/7*	E	1761	XU7JP, XU7JP4	M			09/92 ▸ 07/98	126440	**819752**	92		97		22X1.5	29
1.8 i,1.8 i 16V	*N2F2, N2E/3/4, N2K/5/7*	E	1761	XU7JP, XU7JP4	M			09/92 ▸ 07/98	126445	**819747**	92	96	97	101	22X1.5	29
1.8 i	*N2H4, N2E/3A/4A*	E	1761	XU7JP	A			09/92 ▸ 07/98	126444	**819755**	88	92	93	97	22X1.5	29
1.8 i	*N2H4, N2E/3A/4A*	E	1761	XU7JP	A			09/92 ▸ 07/98	126445	**819747**	92	96	97	101	22X1.5	29
1.8 i	*N2H4, N2E/3A/4A*	E	1761	XU7JP	A			09/92 ▸ 07/98	126440	**819752**	92		97		22X1.5	29
1.9 i	*N2B/6/8*	E	1905	XU9JA	M			03/91 ▸ 08/92	126445	**819747**	92	96	97	101	22X1.5	29
1.9 i	*N2B/6/8*	E	1905	XU9JA	M			03/91 ▸ 08/92	126440	**819752**	92		97		22X1.5	29
1.9 i	*N2B8A*	E	1905	XU9JA	A			09/92 ▸ 08/93	126445	**819747**	92	96	97	101	22X1.5	29
1.9 i	*N2B8A*	E	1905	XU9JA	A			09/92 ▸ 08/93	126440	**819752**	92		97		22X1.5	29
2.0 i	*N2E/6/7*	E	1998	XU10J2C	M			09/92 ▸ 07/98	126444	**819755**	88	92	93	97	22X1.5	29
2.0 i,2.0 i 16V	*N2F1, N2J9, N2L1, N2E/6/7*	E	1998	XU10J2C, XU10J4, XU10J4RS	M			09/92 ▸ 07/98	126440	**819752**	92		97		22X1.5	29
2.0 i 16V	*N2F1, N2J9*	E	1998	XU10J4	M			10/92 ▸ 07/98	126445	**819747**	92	96	97	101	22X1.5	29
2.0 i	*N2J3*	E	1998	XU10J2C	A			09/92 ▸ 07/98	126445	**819747**	92	96	97	101	22X1.5	29
2.0 i	*N2J3*	E	1998	XU10J2C	A			09/92 ▸ 07/98	126444	**819755**	88	92	93	97	22X1.5	29
1.4 D	*N2H6*	D	1360	TUD3	M			07/94 ▸ 07/98	96138637	**819753**	91		93		22X1.5	29
1.5 D	*N2M3*	D	1527	TUD5	M			07/94 ▸ 07/98	126440	**819752**	92		97		22X1.5	29
1.8 D	*N2C2/T*	D	1769	XUD7	M			09/92 ▸ 07/98	126443	**819753**	91		93		22X1.5	29
1.9 D,1.9 TD	*N2C/7/8, N2D/5/5/T, N2F/45*	D	1905	XUD9TE, XUD9A	M			07/92 ▸ 07/98	126444	**819755**	88	92	93	97	22X1.5	29
1.9 D	*N2C/3/4/4/T/6, N2D/5/5/1/8*	D	1905	XUD9A, XUD9	M			09/92 ▸ 07/98	126443	**819753**	91		93		22X1.5	29
1.9 D	*N2C3A, N2H5*	D	1905	XUD9A	A			09/92 ▸ 07/98	126444	**819755**	88	92	93	97	22X1.5	29
CITROËN																	
Berlingo (96>2002)																	
1.1 i,1.1 i GPL	*MAH/DZA/DZD/DZF, MBH/DZE DZF, MFH/DZE/DZF*	E	1124	TU1M+	M	-		07/96 ▸ 12/02	126440	**819752**	92		97		22X1.5	29
1.4,1.4 i,1.4 i GPL	*MCKFXF, MBK/5AG/6CG/FXF MFK/5AG/6CG/FXB/FXF*	E	1360	TU3JP, TU3.2	M	-		07/96 ▸ 12/02	126440	**819752**	92		97		22X1.5	29
1.8 i	*MFLFXF*	E	1761	XU7JB	M	-		07/97 ▸ 12/02	126440	**819752**	92		97		22X1.5	29
1.8 D	*MBA/9AE/PAG, MEA9AE, MFA9AE, MCA 9AE/9AG*	D	1769	XUD7	M	+/-		10/96 ▸ 12/02	126443	**819753**	91		93		22X1.5	29
1.8 D	*MBA9AE, MCA9AE*	D	1769	XUD7	M	-		07/96 ▸ 09/96	126445	**819747**	92	96	97	101	22X1.5	29
1.9 D	*MCW.JZF, MEW.JZF, MFW.JZF, MBW/.JZC/.JZF*	D	1868	DW8	M	-		07/98 ▸ 12/02	126443	**819753**	91		93		22X1.5	29
1.9 D	*MCD9BE, MED9BE, MBD/9BE, MFD/9BE JYF*	D	1905	XUD9A	M	+/-		10/96 ▸ 12/02	126443	**819753**	91		93		22X1.5	29
1.9 D	*MCD9BE, MFDJYF, MBD/9BE*	D	1905	XUD9A	M	-		07/96 ▸ 09/96	126445	**819747**	92	96	97	101	22X1.5	29
2.0 HDi	*MBR/HYB, MCR/HYB/HYF, MFR HYB/HYF*	D	1997	DW10TD	M	+/-		10/99 ▸ 12/02	126443	**819753**	91		93		22X1.5	29
C15																	
1.0	*VDPL, VDSD*	E	954	TU9, XV8	M			10/87 ▸ 06/95	126415	**819744**	82		92		22X1.5	29
1.0 ▸3978	*VDPL*	E	954	XV8	M			11/86 ▸ 09/87	126414	**819757**	79		88		22X1.5	29
1.1	*VDP/S/T*	E	1118	E1A	M			07/87 ▸ 07/88	91517674	**819773**	88	92	93	97	22X1.5	29
1.1 4222 ▸	*VDP/S/T*	E	1118	E1A	M			05/88 ▸ 07/88	126415	**819744**	82		92		22X1.5	29
1.1,1.1 i 3979 ▸	*VDP/A/F/X/Y/Z, VDVN, VDS C/E/F/V/Z*	E	1124	XW7B1, TU1M, TU1	M			10/87 ▸ 02/01	126415	**819744**	82		92		22X1.5	29
1.1 ▸3978	*VDP/A/F*	E	1124	XW7B1	M			10/84 ▸ 09/87	126414	**819757**	79		88		22X1.5	29
1.3	*VDP/U/V/W*	E	1294	G1A	M			07/87 ▸ 07/88	91517674	**819773**	88	92	93	97	22X1.5	29
1.3 4222 ▸	*VDP/U/V/W*	E	1294	G1A	M			05/88 ▸ 07/88	126415	**819744**	82		92		22X1.5	29
1.4,1.4 i 3979 ▸	*VD*/, VDP/J/K/M, VDS/A/B C/G/J*	E	1360	TU3A, TU3.2, XY7CP, TU3M, XY7 TU3TR	M			10/87 ▸ 02/01	126415	**819744**	82		92		22X1.5	29
1.4,1.4 i ▸3978	*VDSA, VDP/J/K/M*	E	1360	XY7CP, XY7	M			07/86 ▸ 09/87	126414	**819757**	79		88		22X1.5	29
1.7 D	*VDP/B/BF/G/P/PF*	D	1769	XUD7	M			05/85 ▸	95630939	**819772**	79	83	84	88	22X1.5	29
1.7 D 4194 ▸5776	*VDP/B/BF/G/P/PF*	D	1769	XUD7	M			05/88 ▸ 09/92	126418	**819773**	88	92	93	97	22X1.5	29

• **New** Nouveau **Nuevo** Novo **Nuovo** Nieuw **Neu** Yeni Новый Nou

		Type Ctr.		CC		AC			OE	Valeo	T1	T2	T3	T4	COD.	○: mm
CITROËN (.../...)																
C15 (.../...)																
1.7 D	*VDSX, VDP/B/P* ▸8284	D	1769	XUD7	M			10/84 ▸ 07/99	95576325	**819770**	83	88	87	92	22X1.5	29
C25 (81>90)																
1.8	*280/A10/C10*	E	1796	XM7T	M		+ Cable	11/81 ▸ 05/90	126410	**819828**	83	87	88	92	22X1.5	29
1.8	*280/A10/C10*	E	1796	XM7T	M		+ Cable	11/81 ▸ 1990	126411	**819764**	87		92		22X1.5	29
1.8	*280/A10/C10*	E	1796	XM7T	M		+ Cable	07/83 ▸ 05/90	126410	**819828**	83	87	88	92	22X1.5	29
1.8	*280/A10/C10*	E	1796	XM7T	M		+ Cable	07/83 ▸ 1990	126411	**819764**	87		92		22X1.5	29
2.0	*280/B20/G20*	E	1971	XN1T	M		+ Cable	11/81 ▸ 05/90	126410	**819828**	83	87	88	92	22X1.5	29
2.0	*280/B20/G20*	E	1971	XN1T	M		+ Cable	11/81 ▸ 1990	126411	**819764**	87		92		22X1.5	29
2.0	*280/B20/C20/G20/G22*	E	1971	XN1T	M		+ Cable	07/83 ▸ 05/90	126410	**819828**	83	87	88	92	22X1.5	29
2.0	*280/B20/C20/G20/G22*	E	1971	XN1T	M		+ Cable	07/83 ▸ 1990	126411	**819764**	87		92		22X1.5	29
1.9 D	*280G*	D	1905	XUD9A	M		+ Cable	12/87 ▸ 05/90	126410	**819828**	83	87	88	92	22X1.5	29
2.5 D,2.5 TD	*280/B50/B90/G50/G52/G90*	D	2500	U25	M		+ Cable	07/87 ▸ 05/90	126410	**819828**	83	87	88	92	22X1.5	29
2.5 D,2.5 TD	*2C50BD, 2C90BD, 280/A50 B50/B54/B90/B94/C50/C54 C90/C94/G50/G54/G90/G94*	D	2500	U25	M		+ Cable	11/81 ▸ 05/90	126410	**819828**	83	87	88	92	22X1.5	29
C25 (90>94)																
1.8	*290/A11/C11*	E	1796	XM7T	M		+ Cable	09/90 ▸ 02/94	126410	**819828**	83	87	88	92	22X1.5	29
1.8	*290/A11/C11*	E	1796	XM7T	M		+ Cable	09/90 ▸ 05/92	126411	**819764**	87		92		22X1.5	29
1.8	*290/A11/C11*	E	1796	XM7T	M			05/92 ▸ 02/94	126435	**819774**	87		92		22X1.5	29
2.0	*290/A22/A42/B22/B42/B44/C22/C42/C44 G22/G42/G44/H22/H42/J32/J42/K32/K42 L32/L42*	E	1971	XN1TA CP, XN1TA, XN1T	M		+ Cable	09/90 ▸ 05/92	126411	**819764**	87		92		22X1.5	29
2.0	*290/A22/A42/B22/B42/B44/C22/C42/C44 G22/G42/G44/H22/H42/J32/J42/K32/K42 L32/L42*	E	1971	XN1T, XN1TA CP, XN1TA	M		+ Cable	09/90 ▸ 02/94	126410	**819828**	83	87	88	92	22X1.5	29
2.0	*290/A22/A42/B22/B42/B44/C22/C42/C44 G22/G42/G44/H22/H42/J32/J42/K32/K42 L32/L42*	E	1971	XN1TA CP, XN1T, XN1TA	M			05/92 ▸ 02/94	126435	**819774**	87		92		22X1.5	29
1.9 D	*290/B62/C62/G62/H62/M62/S62*	D	1905	XUD9A, XUD9AL	M		+ Cable	09/90 ▸ 05/92	126410	**819828**	83	87	88	92	22X1.5	29
1.9 D	*290/B62/C62/G62/H62/M62/S62*	D	1905	XUD9A, XUD9AL	M			05/92 ▸ 02/94	126430	**820030**	84		95			
2.5 D,2.5 TD	*290/A62/B52/B54/B90/B92 B94/C52/C54/C92/C94/G52 G54/G92/G94/GJ2/H52/H92 J52/J92/K52/L52/L92*	D	2500	U25	M		+ Cable	09/90 ▸ 05/92	126410	**819828**	83	87	88	92	22X1.5	29
2.5 D	*290A62*	D	2500	U25	M		+ Cable	09/90 ▸ 05/92	126411	**819764**	87		92		22X1.5	29
2.5 D,2.5 TD	*290/A62/B52/B54/B90/B92 B94/C52/C54/C92/C94/G52 G54/G92/G94/GJ2/H52/H92 J52/J92/K52/L52/L92*	D	2500	U25	M			05/92 ▸ 02/94	126430	**820030**	84		95			
Dispatch (95>2003)																
1.6 i	*U6U/G/T*	E	1581	160A	M			09/95 ▸	126440	**819752**	92		97		22X1.5	29
1.9 D,1.9 TD	*BZDHXA, U6KS, BYD/HXA U6U/F/K/R/S/5/U*	D	1905	XUD9TF, XUD9BTF, XUD9A	M			09/95 ▸	126444	**819755**	88	92	93	97	22X1.5	29
1.9 TD	*BZDHXA, U6KS, BYD/HXA U6U/K/R/S/5*	D	1905	XUD9BTF,XUD9TF	M	+/-		09/95 ▸ 12/03	133827	•**820834**			60		14X1.25	
Jumper (94>2001)																
2.0 i	*231/A22/A24/A32/B22/B24/C22/C24/G22 G32/H22/H32/N22/N24, 232/B22/F22 G22/H22/J22/K22/L22/N22/N22/N24 321A34, 233/B22/D22/F22/G22/H22 J22/K22/L22/N22*	E	1998	XU10J2U	M	+		02/94 ▸ 12/01	126433	**820031**	87	92	92	97	22X1.5	29
2.0 i	*231/A22/A24/A32/B22/B24/C22/C24/G22 G32/H22/H32/N22/N24, 232/B22/F22 G22/H22/J22/K22/L22/N22/N22/N24 321A34, 233/B22/D22/F22/G22/H22 J22/K22/L22/N22*	E	1998	XU10J2U	M	-		02/94 ▸ 12/01	126432	**819773**	88	92	93	97	22X1.5	29

• **New** Nouveau **Nuevo** Novo **Nuovo** Nieuw **Neu** Yeni Новый Nou

CITROËN (.../...)

Jumper (94>2001) (.../...)

1.9 D,1.9 TD	*231/A32/A62/A72/A74/A82 A84/B72/B74/B82/B84/C32 C62/C72/C82/E72/G62/G72 G82/H62/H72/H82/V62/V72 V82, 232/B72/B82/C32/C62 C72/C82/G72/G82/H72/H82 V82*	D	1905	XUD9UTF, XUD9TEF, XUD9AU XUD9A	M	+/-		02/94 ▸ 12/01	126434	**819827**	83	87	88	92	22X1.5	29
2.5 D,2.5 TD,2.5 TDi	*231/A52/B42/B44/B52/B54 B92/B94/C42/C44/C92/G42 G52/G92/H42/H52/H92/J42 J52/J92/V42/V44/V52/V54 V92/V94, 232/B42/B44/B52 B54/B92/B94/F42/F52/F92 G42/G52/G54/G92/H42/H44 H52/H54/H92/J42/J44/J52 J54/J92/J94/K42/K44/K52 K54/K92/K94/L42/L52/L54 L92/N42/N44/N5*	D	2446	DJ5, DJ5TED, DJ5T	M	+/-		02/94 ▸ 12/01	126434	**819827**	83	87	88	92	22X1.5	29
2.8 D	*232*	D	2798	8140-63	M	+		06/99 ▸ 12/01	126433	**820031**	87	92	92	97	22X1.5	29
2.8 D	*232*	D	2798	8140-63	M	+		06/99 ▸ 12/01	126434	**819827**	83	87	88	92	22X1.5	29

Jumper (2002>2006)

2.2 HDi	*ZAR/MF/MP, ZBR/MD/MF/MH MP, ZCR/MD/MF/MH/MM*	D	2179	DW12TED	M	+		01/02 ▸	126434	**819827**	83	87	88	92	22X1.5	29
2.2 HDi	*ZAR/MF/MP, ZBR/MD/MF/MH MP, ZCR/MD/MF/MH/MM*	D	2179	DW12TED	M	-		01/02 ▸	126433	**820031**	87	92	92	97	22X1.5	29
2.8 HDi	*ZAP/MF/MP, ZBP/MD/MF/MH MP, ZCP/MD/MF/MH/MM*	D	2798	F28TDCR	M	+		01/02 ▸	126434	**819827**	83	87	88	92	22X1.5	29
2.8 HDi	*ZAP/MF/MP, ZBP/MD/MF/MH MP, ZCP/MD/MF/MH/MM*	D	2798	F28TDCR	M	-		01/02 ▸	126433	**820031**	87	92	92	97	22X1.5	29

Jumpy (95>2003)

1.6 i	*U6U/G/N/N/R/T/T/5/T/6/T/8/T/9*	E	1581	160A	M	-		09/95 ▸	126440	**819752**	92		97		22X1.5	29
1.9 D	*BBW/JZA, BAW/JZA, BEW/JZA, BDW/JYB JZA, BVW/JZA, BXW/JZA, BTW/JYB/JZA BZW/JYB/JZA*	D	1868	DW8B, DW8	M	+/-		01/01 ▸	126444	**819755**	88	92	93	97	22X1.5	29
1.9 D,1.9 TD	*BBDHXA, BEDHXA, BSDHXA BUDHXA, BWDHXA, BYDHXA BZDHXA, BAD/HXA, U6K/S/U U/R, U6U/F/H/K/L/P/R/R/8 R/9/S/5/S/6/S/8/S/9/U/U/9*	D	1905	XUD9BTF, XUD9TF, XUD9A	M	+/-		09/95 ▸	126444	**819755**	88	92	93	97	22X1.5	29
1.9 D,1.9 TD 7847 ▸	*BBDHXA, BEDHXA, BSDHXA BUDHXA, BYDHXA, BZDHXA BAD/HXA, U6K/S/U/U/R U6U/F/H/K/L/P/R/R/8/R/9 S/5/S/6/S/8/S/9*	D	1905	XUD9A,XUD9BTF,XUD9TF	M	+/-		09/95 ▸ 12/03	133827	•**820834**			60		14X1.25	

Jumpy (2004>2006)

1.9 D	*BVW/JYB, BXW/JYB, BZW/JYB, BTW/JYB*	D	1868	DW8B	M	-		01/04 ▸	126444	**819755**	88	92	93	97	22X1.5	29

Relay (94>2001)

2.0 i	*231/A22/G22, 232/A22/B22/G22, 233 G22/L22*	E	1998	XU10J2U	M	+		02/94 ▸	126433	**820031**	87	92	92	97	22X1.5	29
2.0 i	*231/A22/G22, 232/A22/B22/G22, 233 G22/L22*	E	1998	XU10J2U	M	-		02/94 ▸	126432	**819773**	88	92	93	97	22X1.5	29
1.9 D,1.9 TD	*231/A62/A72, 232/A62/A72 E62/E82*	D	1905	XUD9A, XUD9UTF	M	+/-		02/94 ▸	126434	**819827**	83	87	88	92	22X1.5	29

• **New** Nouveau **Nuevo** Novo **Nuovo** Nieuw **Neu** Yeni Новый Nou

			Type Ctr.		CC			AC			OE	Valeo	(°)C T1	T2	T3	T4	COD.	○: mm
CITROËN (.../...)																		
Relay (94>2001) (.../...)																		
2.5 D,2.5 TD	*231/B52/B92/G52, 232/B52 B92/G52/G92/J52/J92/K52 K92/L52/L92, 233/B52/B92 G52/G92/J52/J92/K52/K92 L92*	D		2446	DJ5, DJ5T	M	+/-		02/94 ▸		126434	**819827**	83	87	88	92	22X1.5	29
DAEWOO																		
Nexia																		
1.5,1.5 16V	*TF19Y1, TF08V1, TF68V1 TF08Y1, TF19V1, TF68Y1*	E		1498	G15MF, A15MF	M			03/95 ▸		96181814	**819759**	87		92		22X1.5	29
1.5 16V	*TA19V1, TA08V1, TA68V1*	E		1498	A15MF	A			03/95 ▸		96181814	**819759**	87		92		22X1.5	29
FIAT																		
Argenta																		
1600	*132AIV*	E		1585	132D3.000	M		+ Cable	04/81 ▸ 1986		7545520	**819765**	87		92		22x1.5	29
1800		E		1756	132C1.000	M		+ Cable	04/81 ▸ 05/83		7545520	**819765**	87		92		22x1.5	29
2000,2000 i	*132/A3/A311/A4*	E		1995	132C3.000,132D1.000,132E	M		+ Cable	04/81 ▸ 1986		7545520	**819765**	87		92		22x1.5	29
2000	*132/A36/A361*	E		1995	132C3.000,132D1.000	A		+ Cable	04/81 ▸ 1986		7545520	**819765**	87		92		22x1.5	29
2500 TD	*132A4DT*	D		2445	8144-81	M		+ Cable	05/83 ▸ 1986		5934064	**819828**	83	87	88	92	22X1.5	29
2500 D,2500 TD	*132/A4DT/AID*	D		2445	8144-61,8144-81	M		+ Cable	05/83 ▸ 1986		4475635	**819825**	83		90		22x1.5	29
Brava																		
1.4 i 12V	*182/BA1A/BG1A*	E		1372	182A3.000, 182A5.000	M	+		06/95 ▸		7738582	**820031**	87	92	92	97	22X1.5	29
1.4 i 12V	*182/BA1A/BG1A*	E		1372	182A3.000, 182A5.000	M	-		06/95 ▸		7728057	**819774**	87		92		22X1.5	29
1.6 i 16V	*182/B01A/BB1A/BH1A*	E		1581	182A4.027, 182A6.000 182A4.000	M	+		06/95 ▸		7738582	**820031**	87	92	92	97	22X1.5	29
1.6 i 16V	*182/B01A/BB1A/BH1A*	E		1581	182A6.000, 182A4.000 182A4.027	M	-		06/95 ▸		7728057	**819774**	87		92		22X1.5	29
1.6 i 16V	*182BB1A*	E		1581	182A4.000	A	+		10/96 ▸ 09/98		7738582	**820031**	87	92	92	97	22X1.5	29
1.6 i 16V	*182BB1A*	E		1581	182A4.000	A	-		10/96 ▸ 09/98		7728057	**819774**	87		92		22X1.5	29
1.8 i 16V	*182BC1A*	E		1747	182A2.000	M	+/-		06/95 ▸ 09/98		7738581	**819827**	83	87	88	92	22X1.5	29
1.9 JTD,1.9 TD	*182/B11A/BF/BF1A/BI1A BR1A*	D		1910	182B4.000, 182A7.000 182A8.000	M	+/-		03/96 ▸		7738582	**820031**	87	92	92	97	22X1.5	29
1.9 JTD,1.9 TD	*182/BF/BF1A/BI1A/BR1A*	D		1910	182A8.000, 182B4.000 182A7.000	M	-		03/96 ▸		7738581	**819827**	83	87	88	92	22X1.5	29
1.9 D	*182BE1B*	D		1929	160A7.000	M	+/-		06/95 ▸ 09/98		7738581	**819827**	83	87	88	92	22X1.5	29
1.9 D	*182BE1B*	D		1929	160A7.000	M	+		06/95 ▸ 09/98		7728057	**819774**	87		92		22X1.5	29
Bravo (95>98)																		
1.4 i 12V	*182/AA1A/AGIA*	E		1372	182A5.000, 182A3.000	M	+		06/95 ▸ 09/98		7738582	**820031**	87	92	92	97	22X1.5	29
1.4 i 12V	*182/AA1A/AGIA*	E		1372	182A5.000, 182A3.000	M	-		06/95 ▸ 09/98		7728057	**819774**	87		92		22X1.5	29
1.6 i 16V	*182/AB1A/ABIA/AHIA*	E		1581	182A6.000, 182A4.000	M	+		06/95 ▸ 09/98		7738582	**820031**	87	92	92	97	22X1.5	29
1.6 i 16V	*182/AB1A/ABIA/AHIA*	E		1581	182A4.000, 182A6.000	M	-		06/95 ▸ 09/98		7728057	**819774**	87		92		22X1.5	29
1.6 i 16V	*182AB11*	E		1581	182A4.000	A	+		10/96 ▸ 09/98		7738582	**820031**	87	92	92	97	22X1.5	29
1.6 i 16V	*182AB11*	E		1581	182A4.000	A	-		10/96 ▸ 09/98		7728057	**819774**	87		92		22X1.5	29
1.8 i 16V	*182/AC1A/AC1B*	E		1747	182A2.000	M	+		06/95 ▸ 09/98		7738582	**820031**	87	92	92	97	22X1.5	29
1.8 i 16V	*182/AC1A/AC1B*	E		1747	182A2.000	M	-		06/95 ▸ 09/98		7728057	**819774**	87		92		22X1.5	29
2.0 i 20V	*182AD1A*	E		1998	182A1.000	M	+		06/95 ▸ 09/98		7738582	**820031**	87	92	92	97	22X1.5	29
2.0 i 20V	*182AD1A*	E		1998	182A1.000	M	-		06/95 ▸ 09/98		7728057	**819774**	87		92		22X1.5	29
1.9 TD	*182/AF1A/AI1A*	D		1910	182A7.000, 182A8.000	M	+/-		03/96 ▸ 09/98		7738582	**820031**	87	92	92	97	22X1.5	29
1.9 TD	*182/AF1A/AI1A*	D		1910	182A7.000, 182A8.000	M	+/-		03/96 ▸ 09/98		7738581	**819827**	83	87	88	92	22X1.5	29
1.9 D	*182/AE1A/AE1B*	D		1929	160A7.000	M	+/-		06/95 ▸ 09/98		7738581	**819827**	83	87	88	92	22X1.5	29
Bravo (98>2006)																		
1.2 i 16V	*182AP1A*	E		1242	182B2.000	M	-		10/98 ▸		7728057	**819774**	87		92		22X1.5	29
1.6 i 16V	*182AB1A*	E		1581	182A4.000	M	-		10/98 ▸		7728057	**819774**	87		92		22X1.5	29
1.6 i 16V	*182AB11*	E		1581	182A4.000	A	-		10/98 ▸		7728057	**819774**	87		92		22X1.5	29
1.9 JTD,1.9 TD	*182/AF1A/AI1A/AR1A*	D		1910	182A7.000, 182B4.000 182A8.000	M	+/-		10/98 ▸		7738582	**820031**	87	92	92	97	22X1.5	29

• **New** Nouveau **Nuevo** Novo **Nuovo** Nieuw **Neu** Yeni Новый Nou

		Type Ctr.		cc			AC			OE	Valeo	(°)C T1	T2	T3	T4	COD.	mm	
FIAT (.../...)																		
Bravo (98>2006) (.../...)																		
1.9 JTD,1.9 TD	*182/AF1A/AR1A*	D	1910	182B4.000, 182A7.000	M	-		10/98 ▸		7738581	**819827**	83	87	88	92	22X1.5	29	
Cinquecento																		
700,700 i	*170/AA43/AD43*	E	704	170A.000, 170A.046	M			01/92 ▸ 02/98		46520219	**819774**	87		92		22X1.5	29	
900,900 i	*170/AF53/AG53/BF53/CF53 CF5C*	E	899	1170A1.046F, 1170A1.000 1170A1.046	M			01/92 ▸ 02/98		46520219	**819774**	87		92		22X1.5	29	
900,900 i	*170/AB53/AC53*	E	903	170A1.046, 170A1.000	M			01/92 ▸ 02/98		46520219	**819774**	87		92		22X1.5	29	
1.1 i	*170AH53*	E	1108	176B2.000	M			10/94 ▸ 02/98		46520219	**819774**	87		92		22X1.5	29	
Coupe																		
1.8 i 16V	*175AXA1*	E	1747	183A1.000	M			07/96 ▸		46477717	**820031**	87	92	92	97	22X1.5	29	
2.0 i 16V,2.0 i Turbo 16V	*FAC/A1AA/A1BD/B1AB*	E	1995	175A1.000, 836A3.000 836A3.011	M	+/-		11/93 ▸ 09/96		46477717	**820031**	87	92	92	97	22X1.5	29	
2.0 i Turbo 16V	*FACB1AB*	E	1995	175A1.000	M			11/93 ▸ 09/96		5992746	**819774**	87		92		22X1.5	29	
2.0 i 20V	*175/AXC1/AXE1*	E	1998	182B3.000, 182A1.000	M			07/96 ▸		5992746	**819774**	87		92		22X1.5	29	
2.0 i 20V,2.0 i Turbo 20V	*175/AXC1/AXD1/AXE1*	E	1998	175A3.000, 182B3.000 182A1.000	M			07/96 ▸		46477717	**820031**	87	92	92	97	22X1.5	29	
Croma																		
1.6	*154LA55*	E	1585	154A.000	M	+	+ Cable	01/91 ▸ 12/92		82436409	•**819826**	87		92		22X1.5	29	
1.6	*154LA55*	E	1585	154A.000	M	-		01/91 ▸ 12/92		5992746	**819774**	87		92		22X1.5	29	
1.6,1600	*154/AB55/LA55*	E	1585	154A.000,154A.048	M		+ Cable	10/85 ▸ 12/92		82435465	**819765**	87		92		22x1.5	29	
2.0 CHT,2.0 ie,2.0 ie 16V 2.0 ie Turbo,2000 ie 0111372 ▸	*15AG55A, 154/AC55/AD55 AG55/AM/AQ55/AU55/DG55 LB55/LC55/LD55/LM55/LN55 NC55*	E	1995	154C3.046, 154E1.000 154C3.000, 834B.146 154A2.046, 154A2.000, 154C 154A1.000, 834B.000 154C5.000	M	+/-, -		01/91 ▸ 08/96		5992746	**819774**	87		92		22X1.5	29	
2.0 CHT,2.0 ie Turbo 2000 ie	*155PF55, 15AG55A, 154 AD55/AG55/AM/AQ55/AU55 DG55/LB55/LE55/LF55/ME55 NE55/NF55*	E	1995	834B.000, 154A2.000 154C5.000, 154C, 154A2.046 154A1.000, 154C4.000 154C4.046	M	+ +/-	+ Cable	10/85 ▸ 08/96		82436409	•**819826**	87		92		22X1.5	29	
2.0 CHT,2000 ie	*154/AD35/AQ35/AO45/LB45*	E	1995	834B.000, 154C5.000	A	+	+ Cable	10/85 ▸ 12/92		82436409	•**819826**	87		92		22X1.5	29	
2.0 CHT,2.0 ie,2000 ie	*154/AD35/AQ35/AO45/LB45 LC45/LD45/LM45*	E	1995	154C5.000, 834B.146 154C3.046, 154C3.000 834B.000	A	- +/-	+ Cable	10/85 ▸ 08/96		7576327	**820232**	83	87	88	92	22X1.5	29	
2.0 ie	*154/LC45/LD45/LM45*	E	1995	154C3.000, 834B.146 154C3.046	A			01/91 ▸ 08/96		5992746	**819774**	87		92		22X1.5	29	
2.0 CHT,2.0 ie Turbo 2000 ie 0111371 ▸	*154/AC55/AD55/AG55/AM*	E	1995	154A1.000,154A2.000,154A2.046 154C,834B.000	M		+ Cable	10/85 ▸		82435465	**819765**	87		92		22x1.5	29	
2.0 TDiD	*154/AP55/LG55/LR55*	D	1929	154D1.000, 154C6.000, 154B	M	+/-	+ Cable	07/88 ▸ 12/96		82436409	•**819826**	87		92		22X1.5	29	
2.0 TDiD	*154/LG55/LR55*	D	1929	154D1.000, 154C6.000	M	+	+ Cable	01/91 ▸ 12/96		7576327	**820232**	83	87	88	92	22X1.5	29	
2500 TD 0111372 ▸	*154AF55*	D	2445	8144-91	M		+ Cable	▸ 06/88		82436409	•**819826**	87		92		22X1.5	29	
2500 TD 0111371 ▸	*154AF55*	D	2445	8144-91	M		+ Cable	05/86 ▸		82435465	**819765**	87		92		22x1.5	29	
2.5 TD,2500 D,2500 TD	*154/AE55/AR55/LH55/LI55 LL55/PL55*	D	2500	8144-97Y, 8144-97S, 8144-97Y7 8144-97, 8144-67	M	+/-	+ Cable	01/91 ▸ 08/96		82436409	•**819826**	87		92		22X1.5	29	
2.5 TD	*154LH45*	D	2500	8144-97	A	+/-	+ Cable	01/91 ▸ 12/92		82436409	•**819826**	87		92		22X1.5	29	
2500 D 0111371 ▸	*154AE55*	D	2500	8144-67	M		+ Cable	10/85 ▸		82435465	**819765**	87		92		22x1.5	29	
Marea																		
1.4 i 12V	*185/AXA/BXA*	E	1372	182A3.000	M	+		07/96 ▸ 01/99		7738582	**820031**	87	92	92	97	22X1.5	29	
1.4 i 12V	*185/AXA/BXA*	E	1372	182A3.000	M	-		07/96 ▸ 01/99		7728057	**819774**	87		92		22X1.5	29	
1.6 i 16V 1.6 i Bipower 16V	*185/AXB/AXH/AXH1/AXL1/BXB*	E	1581	185A3.000, 182A4.000 182B5.098	M	+		07/96 ▸		7738582	**820031**	87	92	92	97	22X1.5	29	
1.6 i 16V 1.6 i Bipower 16V	*185/AXB/AXH/AXH1/AXL1/BXB*	E	1581	182B5.098, 185A3.000 182A4.000	M	-		07/96 ▸		7728057	**819774**	87		92		22X1.5	29	
1.6 i 16V	*185/AXB/BXB*	E	1581	182A4.000	A	+		09/96 ▸ 01/99		7738582	**820031**	87	92	92	97	22X1.5	29	
1.6 i 16V	*185/AXB/BXB*	E	1581	182A4.000	A	-		09/96 ▸ 01/99		7728057	**819774**	87		92		22X1.5	29	
1.8 i 16V	*185/AXC/AXC1/BXC/BXC1*	E	1747	182A2.000	M	+		07/96 ▸		7738582	**820031**	87	92	92	97	22X1.5	29	
1.8 i 16V	*185/AXC/AXC1/BXC/BXC1*	E	1747	182A2.000	M	-		07/96 ▸		7728057	**819774**	87		92		22X1.5	29	
2.0 i 20V	*185/AXD/BXD*	E	1998	182A1.000	M	+		07/96 ▸ 01/99		7738582	**820031**	87	92	92	97	22X1.5	29	

• **New** Nouveau **Nuevo** Novo **Nuovo** Nieuw **Neu** Yeni Новый Nou

		Type Ctr.		CC			AC			OE	Valeo	(°)C T1	T2	T3	T4	COD.	○: mm	
FIAT (.../...)																		
Marea (.../...)																		
2.0 i 20V	*185/AXD/BXD*	E	1998	182A1.000		M	-		07/96 ▸ 01/99	7728057	**819774**	87		92		22X1.5	29	
1.9 TD	*185/AXE/AXF/AXF1/BXE/BXF BXF1*	D	1910	182A8.000, 182A7.000		M	+/-		07/96 ▸	7738582	**820031**	87	92	92	97	22X1.5	29	
1.9 TD	*185/AXE/AXF/BXE/BXF*	D	1910	182A7.000, 182A8.000		M	-		07/96 ▸ 01/99	7738581	**819827**	83	87	88	92	22X1.5	29	
2.4 JTD,2.4 TD	*185/AXG/AXQ1/BXG/BXQ1*	D	2387	185A6.000, 185A2.000		M	+/-		07/96 ▸	7738581	**819827**	83	87	88	92	22X1.5	29	
Marengo (159) (89>93)																		
1.9 D,1.9 Tds	*159/AG/AI*	D	1929	160A7.000, 160A6.000		M			11/89 ▸ 02/93	46478033	**819827**	83	87	88	92	22X1.5	29	
Marengo (159) (93>95)																		
1.9 D,1.9 TD	*159/AG/BI*	D	1929	160A6.000, 160A7.000		M			03/93 ▸ 01/95	46478033	**819827**	83	87	88	92	22X1.5	29	
Marengo (185) (95>)																		
1.9 JTD,1.9 TD	*185/CXE/CXF/CXF1/CXN1 CXT1*	D	1910	182A8.000, 186A6.000 182B4.000, 182A7.000		M	+/-		01/95 ▸	7738582	**820031**	87	92	92	97	22X1.5	29	
1.9 TD	*185/CXE/CXF*	D	1910	182A7.000, 182A8.000		M	-		01/95 ▸	7738581	**819827**	83	87	88	92	22X1.5	29	
Palio																		
1.1	*178BXM1*	E	1108	178B9.033		M	+		09/98 ▸ 02/01	5992746	**819774**	87		92		22X1.5	29	
1.2 i	*178/DXG1/DYA1*	E	1242	178B5.000, 188A4.000		M	+		09/97 ▸ 02/01	46477717	**820031**	87	92	92	97	22X1.5	29	
1.2 i	*178/AXU1/BXU1/DXG1/DYA1*	E	1242	178B7.045, 188A4.000 178B5.000		M	-		09/97 ▸ 02/01	5992746	**819774**	87		92		22X1.5	29	
1.2 i,1.2 i 16V	*178/BXS1/BYA1/BYE1*	E	1242	178C4.066, 188A4.000 188A5.000		M			03/01 ▸	7738581	**819827**	83	87	88	92	22X1.5	29	
1.4 i	*178/BXC1/BXP1*	E	1372	178B2.016, 178B2.000		M	-		06/99 ▸ 02/01	5992746	**819774**	87		92		22X1.5	29	
1.6 i	*178/AXV1/DXV1*	E	1580	178D2.011		M	+		06/99 ▸ 02/01	46477717	**820031**	87	92	92	97	22X1.5	29	
1.6 i	*178/AXV1/DXV1*	E	1580	178D2.011		M	-		06/99 ▸ 02/01	5992746	**819774**	87		92		22X1.5	29	
1.6 i 16V	*178/BXD1/DXD1*	E	1581	178B3.000		M	+		09/97 ▸ 02/01	46477717	**820031**	87	92	92	97	22X1.5	29	
1.6 i 16V	*178/BXD1/DXD1*	E	1581	178B3.000		M	-		09/97 ▸ 02/01	5992746	**819774**	87		92		22X1.5	29	
1.6 i 16V	*178DYC1*	E	1596	182B6.000		M	+		09/97 ▸ 02/01	46477717	**820031**	87	92	92	97	22X1.5	29	
1.6 i 16V	*178DYC1*	E	1596	182B6.000		M	-		09/97 ▸ 02/01	5992746	**819774**	87		92		22X1.5	29	
1.6 i 16V	*178BYC1*	E	1596	182B6.000		M			03/01 ▸	7738581	**819827**	83	87	88	92	22X1.5	29	
1.7 D,1.7 TD	*178/BXN1/DXH1*	D	1697	176B3.000, 176A3.000		M	+/-		09/97 ▸ 02/01	5992746	**819774**	87		92		22X1.5	29	
1.7 TD	*178/DXB1/DXH1*	D	1697	176B7.000, 176A3.000		M	+/-		09/97 ▸ 02/01	46477717	**820031**	87	92	92	97	22X1.5	29	
1.9 D	*178DYD1*	D	1910	223A6.000		M	+		09/97 ▸ 02/01	46477717	**820031**	87	92	92	97	22X1.5	29	
1.9 D	*178DYD1*	D	1910	223A6.000		M	-		09/97 ▸ 02/01	5992746	**819774**	87		92		22X1.5	29	
Panda																		
0.6	*141A*	E	652	126B.B1C0		M		+ Cable	07/80 ▸ 02/86	4477081	**819767**	87		92		22X1.5	29	
750	*11A/14AC/A4AC/A4CT, 141/AA43/AA4C AA53/AI43/AI53/AM43/AM53*	E	769	141B.000, 156A4.000 156A4.048		M			03/86 ▸ 12/92	5992746	**819774**	87		92		22X1.5	29	
0.8	*141/A2N/A2NC*	E	843	100GL6.000		M		+ Cable	01/82 ▸ 02/86	4477081	**819767**	87		92		22X1.5	29	
900 ie	*141/AT53/GT53/GT5F*	E	899	1170A1.046, 1170A1.046F		M			10/89 ▸	5992746	**819774**	87		92		22X1.5	29	
0.9	*141/A1I/A3/A35/A35C/A3I/A3I5/A3IC*	E	903	100GL3.000		M		+ Cable	07/80 ▸ 02/86	4477081	**819767**	87		92		22X1.5	29	
900	*141/AL43/AL53*	E	903	146A.048		M			06/89 ▸ 03/92	5992746	**819774**	87		92		22X1.5	29	
1.0	*141/A4/A4C*	E	965	A112B1.054		M		+ Cable	06/83 ▸ 02/86	4477081	**819767**	87		92		22X1.5	29	
1000,1000 ie	*11A/B5AC/B5CT/B8AC/B8CT E5B8, 151AE53, 141/AB43 AB53/AB83/AE53/AE5B/AF43 AF53/AJ53/AO43/AO53*	E	999	156A2.246, 156A2.000 156A2.100, 141C2.000 156A3.000		M			03/86 ▸	5992746	**819774**	87		92		22X1.5	29	
1000	*141AB13*	E	999	156A2.000		A			1990 ▸ 12/92	5992746	**819774**	87		92		22X1.5	29	
1100 ie	*141/AK53/AS53/AW53*	E	1108	156C.046, 176B2.000 187A1.000		M			06/89 ▸	5992746	**819774**	87		92		22X1.5	29	
1100 ie	*141/AK53/AS53/MK53*	E	1108	176B2.000, 156C.046		M		+ Cable	04/91 ▸	7695951	**820232**	83	87	88	92	22X1.5	29	
1100 ie	*141/AK13/AS13*	E	1108	156C.046, 176B2.000		A			10/90 ▸	5992746	**819774**	87		92		22X1.5	29	
1300 D	*141/AD43/AD53/AD5C*	D	1301	156A5.000		M		+ Cable	04/86 ▸ 02/91	7695951	**820232**	83	87	88	92	22X1.5	29	
Punto (93>99)																		
55 ED,55 EL,55 EL 6 speed 55 S,55 SX,55 SX 6 speed	*176/AA53/AA55/AA5C/AA63 AQ/AO53/AO55/AQ63*	E	1108	176A6.000, 176B2.000		M	+/-		07/93 ▸ 09/99	7728057	**819774**	87		92		22X1.5	29	
55 S	*176AH53*	E	1108	176A6.000		M	+/-		07/93 ▸ 07/94	7738581	**819827**	83	87	88	92	22X1.5	29	

• **New** Nouveau **Nuevo** Novo **Nuovo** Nieuw **Neu** Yeni Новый Nou

FIAT (.../...)

Punto (93>99) (.../...)

60 Opera,60 S,60 SX 176/AB52/AC53/AC55/AR53 60 Star,75 ELX,75 HSD AR55/AR5F/AV52/AV53/AV55 75 SX,85 ELX,85 Sporting BB52/BB53/BB55/BB5F/BR52 BV53	E	1242	176B9.000, 176A7.000 176A8.000, 176B4.000	M	+/-		07/93 ▸ 09/99	7728057	**819774**	87		92		22X1.5	29
60 Opera,60 S,60 SX 176/AC53/AC55/AR53/AR55 60 Star,75 ELX,75 HSD AR5F/AV52/AV53/AV55/BR52 75 SX,85 ELX,85 Sporting BV53	E	1242	176A8.000, 176B4.000 176B9.000	M	+		07/93 ▸ 09/99	7738582	**820031**	87	92	92	97	22X1.5	29
60 S 176BB52	E	1242	176A7.000	M	+		03/94 ▸ 04/97	46413969	**820030**	84		95			
85 ELX,85 Sporting 176/AV52/AV53/AV55/BV53	E	1242	176B9.000	M	-		05/97 ▸ 09/99	7738581	**819827**	83	87	88	92	22X1.5	29
60 ELX,60 SX 176/AP13/AR12/AR13/AR15	E	1242	176B1.000, 176B4.000	A	+		05/94 ▸ 09/99	46413969	**820030**	84		95			
60 ELX,60 SX 176/AP13/AP15/AR12/AR13 AR15	E	1242	176B4.000, 176B1.000	A	-		05/94 ▸ 09/99	7728057	**819774**	87		92		22X1.5	29
GT 176/AD53/AS53	E	1372	176B6.000, 176A4.000	M	+/-		07/93 ▸ 09/99	7738581	**819827**	83	87	88	92	22X1.5	29
90 ELX,ELX 176/AL52/BL52/BL53/BL55	E	1581	176A9.000	M	+		11/93 ▸ 04/97	7738582	**820031**	87	92	92	97	22X1.5	29
90 ELX,ELX 176/AL52/BL52/BL53/BL55	E	1581	176A9.000	M	-		11/93 ▸ 04/97	7728057	**819774**	87		92		22X1.5	29
60 Diva,60 S,60 SX,70 ELX 176/AF/AF53/AF55/AF5C 70 SX,ELX,S,SX AF5F/AG53/AI53/AI55/AT AT53/AT55/CG/CG53/CG55	D	1697	176A5.000, 176A3.000F 176A3.000, 176B7.000 176B3.000	M	+/-		07/93 ▸ 09/99	7738581	**819827**	83	87	88	92	22X1.5	29

Regata

70ES 138AB54	G	1301	138B2.000-G	M		+ Cable	09/84 ▸ 11/85	4477081	**819767**	87		92		22X1.5	29
70S 138A934	E	1299	149C4.028	A			07/86 ▸ 1990	5992746	**819774**	87		92		22X1.5	29
70,70ES,70S 138/AA44/AA54/AA55/AB54 AI54/AX44/AX54	E	1301	138B2.000, 149A7.000	M		+ Cable	09/83 ▸ 06/86	4477081	**819767**	87		92		22X1.5	29
70,70S 138/AX54/AX55	E	1301	149A7.000	M			07/86 ▸ 1990	5992746	**819774**	87		92		22X1.5	29
75S,75ie,85S 138/A/AC54	E	1498	138C3.048, 138C2.048 138B3.000	M		+ Cable	09/83 ▸ 06/86	4477081	**819767**	87		92		22X1.5	29
75,75S 138A	E	1498	138C3.048	M			07/86 ▸ 1990	5992746	**819774**	87		92		22X1.5	29
85,85S 138/AC34/AC64	E	1498	138B3.000	A		+ Cable	09/83 ▸ 06/86	4477081	**819767**	87		92		22X1.5	29
75S,85S 138/A/AU34	E	1498	149A5.000, 138C3.048	A			07/86 ▸ 1990	5992746	**819774**	87		92		22X1.5	29
100S,85S 138/AD54/AD55/AE54/AR54 AR55	E	1585	149A4.000, 149A.000	M		+ Cable	09/83 ▸ 06/86	4477081	**819767**	87		92		22X1.5	29
85S 138AU54	E	1585	149A.000	M			07/86 ▸ 1990	5992746	**819774**	87		92		22X1.5	29

Ritmo

65 CL,65 L 138/A1/A13/A135/A15/A1C A1C3/A1C5	E	1301	138A1.000	M		+ Cable	05/78 ▸ 12/79	4478951	**819766**	87		92		22x1.5	29
75 CL,75 L 138/A2/A23/A2C/A2C3	E	1498	138A2.000	M		+ Cable	05/78 ▸ 12/79	4478951	**819766**	87		92		22x1.5	29
75 CL,75 L 138/A236/A26/A2C3/A2C6	E	1498	138A2.000	A		+ Cable	05/78 ▸ 12/79	4478951	**819766**	87		92		22x1.5	29
CL,Confort,L 138/AD0/AD35/AD5/ADC3 ADC5	D	1714	138A5.000	M		+ Cable	02/80 ▸ 10/82	4475635	**819825**	83		90		22x1.5	29

Seicento

0.9 i 187/AXA/AXA1	E	899	1170A1.046F, 1170A1.046	M			03/98 ▸	46520219	**819774**	87		92		22X1.5	29
0.9 i 187AXA1	E	899	1170A1.046F	A			03/98 ▸	46520219	**819774**	87		92		22X1.5	29
1.1 i 187AXB1	E	1108	176B2.000	M			03/98 ▸	46520219	**819774**	87		92		22X1.5	29

Siena (97>2001)

1.2 i 178/CXG1/CXU1	E	1242	178B7.045, 178B5.000	M	+		09/98 ▸	46477717	**820031**	87	92	92	97	22X1.5	29
1.2 i 178/CXG1/CXS1/CXU1	E	1242	178B7.045, 178C4.066 178B5.000	M	-		09/98 ▸	5992746	**819774**	87		92		22X1.5	29
1.4 i 178/CXC/CXP	E	1372	178B2.000, 178B2.016	M	+		11/97 ▸	46477717	**820031**	87	92	92	97	22X1.5	29
1.4 i 178/CXC/CXP	E	1372	178B2.016, 178B2.000	M	-		11/97 ▸	5992746	**819774**	87		92		22X1.5	29
1.6 i 178CXV1	E	1580	178D2.011	M	+		06/99 ▸	46477717	**820031**	87	92	92	97	22X1.5	29
1.6 i 178CXV1	E	1580	178D2.011	M	-		06/99 ▸	5992746	**819774**	87		92		22X1.5	29
1.6 i 16V 178/CXD/CXQ	E	1581	178B3.000, 178C7.098	M	+		11/97 ▸	46477717	**820031**	87	92	92	97	22X1.5	29
1.6 i 16V 178/CXD/CXQ	E	1581	178B3.000, 178C7.098	M	-		11/97 ▸	5992746	**819774**	87		92		22X1.5	29
1.7 D,1.7 TD 178/CXN/CXT1/CYB1	D	1697	178C9.066, 176B3.000 176B7.000	M	+		09/98 ▸	46477717	**820031**	87	92	92	97	22X1.5	29
1.7 D,1.7 TD 178/CXN/CXT1/CYB1	D	1697	176B3.000, 176B7.000 178C9.066	M	-		09/98 ▸	5992746	**819774**	87		92		22X1.5	29
1.2 i,1.6 i 178	E	-		M	+		1997 ▸	46477717	**820031**	87	92	92	97	22X1.5	29

• **New** Nouveau **Nuevo** Novo **Nuovo** Nieuw **Neu** Yeni Новый Nou

FIAT (.../...)

Siena (97>2001) (.../...)

1.2 i,1.6 i	*178*	E	-		M	-		1997 ▸	5992746	**819774**	87		92		22X1.5	29

Spider

2.0	*124//DS*	E	1995	132C3.031,232R14	M		+ Cable	05/82 ▸ 09/85	82435465	**819765**	87		92		22x1.5	29

Tempra

1.4,1.4 ie	*159/AA54/AA55/AC54/AC55 AX54*	E	1372	159A2.000, 160A1.046 836A4.000	M	+/-		11/89 ▸	7728057	**819774**	87		92		22X1.5	29
1.4,1.4 ie	*159/AA54/AA55/AC54/AC55 AX54*	E	1372	160A1.046, 159A2.000 836A4.000	M	+		11/89 ▸	46477717	**820031**	87	92	92	97	22X1.5	29
1.6,1.6 ie	*159/AD54/AD55/AE54/AE55 AJ54/AJ55/AS54/AS55/AT54 AT55/AT5C/BD54*	E	1581	159A3.000, 835C1.000 159B9.000, 159A3.046 159A3.048	M	+/-		11/89 ▸	7728057	**819774**	87		92		22X1.5	29
1.6,1.6 ie	*159/AD54/AD55/AE54/AE55 AJ54/AJ55/AS54/AS55/AT54 AT55/AT5C/BD54*	E	1581	835C1.000, 159A3.046 159A3.048, 159A3.000 159B9.000	M	+/-		11/89 ▸	46477717	**820031**	87	92	92	97	22X1.5	29
1.6,1.6 ie	*159/AD14/AE14/AE15/AS14 AS15*	E	1581	159A3.000, 159A3.046 159A3.048	A	+/-		11/89 ▸	7728057	**819774**	87		92		22X1.5	29
1.6,1.6 ie	*159/AD14/AE14/AE15/AS14 AS15*	E	1581	159A3.046, 159A3.048 159A3.000	A	+		11/89 ▸ 1996	46477717	**820031**	87	92	92	97	22X1.5	29
1.8 ie,1.8 ie 16V	*159/AM54/AM55/AM5C/AN54 AN55/AV54/AV55/AZ54/BV54 BV55/BY54/BY55*	E	1756	159A4.046, 159A4.000 835C2.000, 836A5.000 835C4.000	M	+/-		11/89 ▸	5992746	**819774**	87		92		22X1.5	29
1.8 ie	*159/AM54/AM55/AM5C/AN54 AN55*	E	1756	159A4.000, 159A4.046	M	+		11/89 ▸ 02/93	46477717	**820031**	87	92	92	97	22X1.5	29
2.0 ie	*159/AP54/AP55*	E	1995	159A6.046	M	+/-		11/89 ▸	5992746	**819774**	87		92		22X1.5	29
2.0 ie	*159/AP54/AP55*	E	1995	159A6.046	M	- +		11/89 ▸	46477717	**820031**	87	92	92	97	22X1.5	29
2.0 ie	*159/AP14/AP44*	E	1995	159A6.046	A	+/-		02/90 ▸	46477717	**820031**	87	92	92	97	22X1.5	29
2.0 ie	*159AP44*	E	1995	159A6.046	A	-		02/90 ▸ 02/93	5992746	**819774**	87		92		22X1.5	29
1.9 D,1.9 TD,1.9 TDs	*159/AG54/AG55/AG5C/AI54 AI55/AI5C/AL/AQ54/AQ55 BI54/BI55*	D	1929	160A6.000, 160D1.000 160A7.000, 160A6.046 160B6.046	M			11/89 ▸	46478033	**819827**	83	87	88	92	22X1.5	29

Tipo

1.1	*160/AA45/AA55*	E	1108	160A3.000	M	+	+ Cable	01/88 ▸ 09/91	7596228	**820315**	87	92	92	97	22X1.5	29
1.1	*160/AA45/AA55*	E	1108	160A3.000	M	+		10/91 ▸ 02/93	46477717	**820031**	87	92	92	97	22X1.5	29
1.1	*160/AA45/AA55*	E	1108	160A3.000	M			01/88 ▸ 02/93	7728057	**819774**	87		92		22X1.5	29
1.4,1.4 ie	*160/AB55/AB5C/AD53/AD55 AU55/AU5C*	E	1372	160A1.046, 160A1.000	M	+	+ Cable	01/88 ▸ 09/91	7596228	**820315**	87	92	92	97	22X1.5	29
1.4,1.4 ie	*160/AB55/AB5C/AD53/AD55 AU53/AU55/AU5C/EA53/EA55 EP53/EP55/EP5C*	E	1372	160A1.046, 836A4.000 160A1.000, 159A2.000	M	+		10/91 ▸ 10/95	46477717	**820031**	87	92	92	97	22X1.5	29
1.4,1.4 ie	*160/AB55/AB5C/AD53/AD55 AU53/AU55/AU5C/EA53/EA55 EP53/EP55/EP5C*	E	1372	160A1.000, 160A1.046 836A4.000, 159A2.000	M			01/88 ▸ 10/95	7728057	**819774**	87		92		22X1.5	29
1.4	*160AU15*	E	1372	160A1.000	A	+	+ Cable	04/90 ▸ 09/91	7596228	**820315**	87	92	92	97	22X1.5	29
1.4	*160AU15*	E	1372	160A1.000	A	+		10/91 ▸ 02/93	46477717	**820031**	87	92	92	97	22X1.5	29
1.4	*160AU15*	E	1372	160A1.000	A			04/90 ▸ 02/93	7728057	**819774**	87		92		22X1.5	29
1.6,1.6 ie	*160/AE55/AE5C/AF55/AZ55 AZ5C/B1/BZ55*	E	1581	160A2., 160A2.000	M	+	+ Cable	01/88 ▸ 09/91	7596228	**820315**	87	92	92	97	22X1.5	29
1.6,1.6 ie	*160/AE55/AE5C/AF55/AZ55 AZ5C/B1/BZ55/EB53/EB55 FB55*	E	1581	160A2.000, 835C1.000 159A3.000, 160A2.	M	+		10/91 ▸ 1995	46477717	**820031**	87	92	92	97	22X1.5	29
1.6,1.6 ie	*160/AE55/AE5C/AF55/AZ55 AZ5C/B1/BZ55/EB53/EB55 FB55*	E	1581	160A2.000, 160A2., 835C1.000 159A3.000	M			01/88 ▸ 1995	7728057	**819774**	87		92		22X1.5	29
1.6,1.6 ie	*160/A1/AZ15*	E	1581	160A2.000, 159A3.048	A	+	+ Cable	01/88 ▸ 09/91	7596228	**820315**	87	92	92	97	22X1.5	29
1.6,1.6 ie	*160/A1/AZ15/EC15*	E	1581	159A3.048, 160A2.000	A	+		10/91 ▸ 1994	46477717	**820031**	87	92	92	97	22X1.5	29
1.6,1.6 ie	*160/A1/AZ15/EC15*	E	1581	159A3.048, 160A2.000	A			01/88 ▸ 1994	7728057	**819774**	87		92		22X1.5	29
1.6 2ACT	*160AP55*	E	1585	1602.ACT	M	+	+ Cable	07/88 ▸ 09/91	7596228	**820315**	87	92	92	97	22X1.5	29
1.6 2ACT	*160AP55*	E	1585	1602.ACT	M			07/88 ▸ 09/91	5992746	**819774**	87		92		22X1.5	29
1.8 ie,1.8 ie 16V	*160/AM55/AY55/CD53/ED53 ED55/EQ53*	E	1756	835C2.000, 836A5.000 159A4.046, 159A4.000	M	+		04/89 ▸ 10/95	46477717	**820031**	87	92	92	97	22X1.5	29

• **New** Nouveau **Nuevo** Novo **Nuovo** Nieuw **Neu** Yeni Новый Nou

FIAT (.../...)

Tipo (.../...)

1.8 ie 16V	*160AN55*	E	1756	160A5.000	M	+	+ Cable	11/89 ▸ 02/93	7596228	**820315**	87	92	92	97	22X1.5	29
1.8 ie,1.8 ie 16V	*160/AM55/AN55/AY55/CD53 ED53/ED55/EO53*	E	1756	160A5.000, 159A4.046 835C2.000, 836A5.000 159A4.000	M			04/89 ▸ 10/95	5992746	**819774**	87		92		22X1.5	29
2.0 ie,2.0 ie 16V	*160/AJ/AJ55/AT/AV55/EF53 EF55/GF53*	E	1995	159A6.046, 159A5.046 836A3.000, 160A8.046 154E1.000	M	+/-		06/90 ▸ 1995	46477717	**820031**	87	92	92	97	22X1.5	29
2.0 ie 16V	*160AV55*	E	1995	160A8.046	M	+	+ Cable	03/91 ▸ 02/93	7596228	**820315**	87	92	92	97	22X1.5	29
2.0 ie	*160/AJ/AJ55/AT*	E	1995	159A6.046, 159A5.046	M			06/90 ▸ 1995	5992746	**819774**	87		92		22X1.5	29
2.0 ie	*160/AJ/AJ54/AT*	E	1995	159A5.046, 159A6.046	A	+/-		06/90 ▸ 1995	46477717	**820031**	87	92	92	97	22X1.5	29
2.0 ie	*160AJ54*	E	1995	159A6.046	A			03/93 ▸ 1995	5992746	**819774**	87		92		22X1.5	29
1.7 D	*160/AG55/AG5C*	D	1697	149B4.000	M		+ Cable	01/88 ▸ 05/92	7695951	**820232**	83	87	88	92	22X1.5	29
1.7 D	*160/AG55/AG5C*	D	1697	149B4.000	M			06/92 ▸ 02/93	46478033	**819827**	83	87	88	92	22X1.5	29
1.9 D,1.9 TDs	*160/AH55/AQ55/AQ5C/AR55 AW55*	D	1929	160A6.046, 160A6.000 160B6.046, 160A7.000	M		+ Cable	01/88 ▸ 05/92	7695951	**820232**	83	87	88	92	22X1.5	29
1.9 D,1.9 TDs	*160/AH55/AQ55/AQ5C/AR55 AW55*	D	1929	160A6.046, 160B6.046 160A7.000, 160A6.000	M			06/92 ▸ 02/93	46478033	**819827**	83	87	88	92	22X1.5	29

Ulysse (94>98)

1.8 ie	*220/BB5/BB5U*	E	1761	LFW	M			03/96 ▸ 09/98	9629968880	**819752**	92		97		22X1.5	29
2.0 ie	*220/AC5/AC5U*	E	1998	RFU	M			06/94 ▸ 09/98	9629968880	**819752**	92		97		22X1.5	29
1.9 TD	*220/AE5/AE5U/AH5/AHX*	D	1905	XUD9TEF/K, XUD9TEF/Y, XUD9TEF/L3	M			06/94 ▸ 09/98	9563868480	**819747**	92	96	97	101	22X1.5	29
2.1 TD	*220/AJ5/AJ5U*	D	2088	P8C	M			03/96 ▸ 09/98	9563868480	**819747**	92	96	97	101	22X1.5	29

Ulysse (98>2002)

1.8 ie	*220BB5*	E	1761	LFW	M			10/98 ▸	9629968880	**819752**	92		97		22X1.5	29
2.0 ie,2.0 ie 16V	*220/AC5/AL5/AV5*	E	1998	RFV, RFU	M			10/98 ▸	9629968880	**819752**	92		97		22X1.5	29
1.9 TD	*220/AE5/AH5/AHX*	D	1905	XUD9TEF/L3, XUD9TEF/K	M			10/98 ▸	9563868480	**819747**	92	96	97	101	22X1.5	29
2.1 TD	*220AJ5*	D	2088	P8C	M			10/98 ▸	9563868480	**819747**	92	96	97	101	22X1.5	29

Uno (83>89)

55	*146AD45*	G	1116	138B.000-G	M		+ Cable	04/83 ▸ 11/85	5951985	**819762**	87		92		22X1.5	29
55	*146AD45*	G	1116	138B.000-G	M			04/86 ▸ 11/85	5992746	**819774**	87		92		22X1.5	29
45,45 ES,45 Pop	*146/AA43/AA45/AA53/AA55 AB53/AB55/CD43/CD45/CD53 CD55, 16CD4CT, 14A/A4AC A5AC/B5AC*	E	903	146A.000, 146A1.000	M		+ Cable	01/83 ▸ 10/89	5951985	**819762**	87		92		22X1.5	29
45	*16AA4CT, 16CD5CT, 146/CD4C/CD5C*	E	903	146A.000	M		+ Cable	11/85 ▸ 10/89	5951985	**819762**	87		92		22X1.5	29
45,45 S	*146/AQ43/AQ45/AQ4A/AQ4C AQ53/AQ55/AQ5A*	E	999	156A2.000	M		+ Cable	10/85 ▸ 03/86	5951985	**819762**	87		92		22X1.5	29
45,45 S	*146/AQ43/AQ45/AQ4A/AQ4C AQ53/AQ55/AQ5A, 16A/Q4CT Q5CT*	E	999	156A2.000	M			04/86 ▸ 10/89	5992746	**819774**	87		92		22X1.5	29
55,55 S,60,60 S,SL	*14AD5AC, 146/AD43/AD45 AD53/AD55/AJ43/AJ45/AJ4C AJ53/AJ55/AJ5A*	E	1116	138B.000, 146A4.000	M		+ Cable	04/83 ▸ 03/86	5951985	**819762**	87		92		22X1.5	29
55,55 S,60,60 S,SL	*14AD5AC, 146/AD43/AD45 AD53/AD55/AJ43/AJ45/AJ4C AJ53/AJ55/AJ5A, 16A/J4CT J5CT*	E	1116	138B.000, 146A4.000	M			04/86 ▸ 10/89	5992746	**819774**	87		92		22X1.5	29
60 Selecta	*146/AJ13/AJ15*	E	1116	146A4.000	A			10/87 ▸ 1989	5992746	**819774**	87		92		22X1.5	29
70,70 S,70 SL,70 SX	*146/AE53/AE55/AE5A/AR53 AR55/AR5A/BE53/BE55/BE5A*	E	1301	138B2.000	M		+ Cable	04/83 ▸ 03/86	5951985	**819762**	87		92		22X1.5	29
70,70 S,70 SL,70 SX	*16AR5CT, 146/AE53/AE55 AE5A/AR53/AR55/AR5A/BE53 BE55/BE5A*	E	1301	138B2.000	M			04/86 ▸ 1989	5992746	**819774**	87		92		22X1.5	29
- ▸2565749	*146/AM53/AM55/BM53*	E	1301	146A2.000	M		+ Cable	03/85 ▸	7628799	**819775**	83	87	88	92	22X1.5	29
75 ie		E	1498	138C2.048	M		+ Cable	1986 ▸ 1989	7576281	**819775**	83	87	88	92	22X1.5	29
- 0273294 ▸	*146/AG53/AG55/AG5A*	D	1301	127A5.000	M		+ Cable	05/83 ▸	7628799	**819775**	83	87	88	92	22X1.5	29
-	*16A65CT, 146/A653/A655*	D	1367	146B3.000	M		+ Cable	04/86 ▸ 1989	7628799	**819775**	83	87	88	92	22X1.5	29

• **New** Nouveau **Nuevo** Novo **Nuovo** Nieuw **Neu** Yeni Новый Nou

		Type Ctr.		CC		AC		2 3	OE	Valeo	(°)C T1	T2	T3	T4	COD.	○: mm	
FIAT (.../...)																			
Uno (83>89) (.../...)																			
60	*146/AF53/AF55*	D	1697	149B3.000	M		+ Cable	10/85 ▸ 1989	7628799	**819775**	83	87	88	92	22X1.5	29	
Uno (89>95)																			
Pop	*146/EA43/EA53/EA55*	E	903	146A.048	M			10/89 ▸ 09/92	5992746	**819774**	87		92		22X1.5	29	
Sting,Trend	*146/EB53/EB55*	E	994	146B4.000	M			10/89 ▸ 12/93	5992746	**819774**	87		92		22X1.5	29	
45,45 S	*146/EC43/EC45/EC4C/EC53 EC55/EC5C/ED53/ED55/EE53 EE55*	E	999	156A2.100, 156A2.000 156A2.246	M			10/89 ▸ 12/93	5992746	**819774**	87		92		22X1.5	29	
60 S,S	*146/EF53/EF55/ET53/ET55*	E	1108	156C.046, 160A3.000	M			10/89 ▸ 12/93	5992746	**819774**	87		92		22X1.5	29	
60,Trend	*146/EG53/EJ55*	E	1116	146A4.000, 146A6.000	M	+		10/89 ▸ 12/92	46477717	**820031**	87	92	92	97	22X1.5	29	
60,Trend	*146/EF5C/EG53/EJ55*	E	1116	146A4.000, 146A6.000	M			10/89 ▸ 12/92	5992746	**819774**	87		92		22X1.5	29	
60	*146/EG13/EG15/EG1C*	E	1116	146A4.000, 146A4.048	A	+		07/90 ▸ 12/92	46477717	**820031**	87	92	92	97	22X1.5	29	
60	*146/EG13/EG15/EG1C*	E	1116	146A4.000, 146A4.048	A			07/90 ▸ 12/92	5992746	**819774**	87		92		22X1.5	29	
-	*146EQ53*	E	1301	146A2.000	M		+ Cable	10/89 ▸ 03/91	7628799	**819775**	83	87	88	92	22X1.5	29	
70,70 SX,70S	*146/EH53/EH55/EI53/EI55 EK55/EL53/EL55*	E	1372	160A1.048, 146C1.000 146C1.046, 146C2.028	M	+		10/89 ▸	46477717	**820031**	87	92	92	97	22X1.5	29	
70,70 SX,70S	*146/EH53/EH55/EI53/EI55 EK55/EL53/EL55*	E	1372	160A1.048, 146C1.000 146C2.028, 146C1.046	M			10/89 ▸	5992746	**819774**	87		92		22X1.5	29	
-	*146/ER53/EU53*	E	1372	146A8.046, 146A8.000	M		+ Cable	10/89 ▸ 09/93	7628799	**819775**	83	87	88	92	22X1.5	29	
-	*146EH15*	E	1372	146C1.000	A	+		10/89 ▸ 12/93	46477717	**820031**	87	92	92	97	22X1.5	29	
-	*146EH15*	E	1372	146C1.000	A			10/89 ▸ 12/93	5992746	**819774**	87		92		22X1.5	29	
75S,75SX	*146/EM53/EM55*	E	1498	149C1.000	M	+		10/89 ▸ 12/93	46477717	**820031**	87	92	92	97	22X1.5	29	
75S,75SX	*146/EM53/EM55*	E	1498	149C1.000	M			10/89 ▸ 12/93	5992746	**819774**	87		92		22X1.5	29	
-	*146/EM13/EM15*	E	1498	149C1.000	A	+		10/89 ▸ 12/93	46477717	**820031**	87	92	92	97	22X1.5	29	
-	*146/EM13/EM15*	E	1498	149C1.000	A			10/89 ▸ 12/93	5992746	**819774**	87		92		22X1.5	29	
45	*146/EN53/EN55*	D	1301	146B1.000	M		+ Cable	10/89 ▸ 03/92	7576281	**819775**	83	87	88	92	22X1.5	29	
70,70 S	*146/ES53/ES55/ES5C*	D	1367	146B3.000	M		+ Cable	10/89 ▸ 07/93	7628799	**819775**	83	87	88	92	22X1.5	29	
60	*146/E05C/E053/E055*	D	1697	146B2.000, 149B3.000	M		+ Cable	10/89 ▸ 08/95	7576281	**819775**	83	87	88	92	22X1.5	29	
-	*146/EP53/EP55*	D	1929	149B5.046	M		+ Cable	07/90 ▸ 03/94	7576281	**819775**	83	87	88	92	22X1.5	29	
Uno CS (87>)																			
-	*146/A753/A75C*	E	1116	146A6.000	M			10/87 ▸ 1993	5992746	**819774**	87		92		22X1.5	29	
60	*16AF5CT, 146/A755/AF5A*	D	1697	149B3.000, 146B2.000	M		+ Cable	10/87 ▸ 1993	7576281	**819775**	83	87	88	92	22X1.5	29	
FIAT																			
Ducato (81>94)																			
2.0	*280*	E	1971	170B	M			05/92 ▸ 01/94	7748867	**819774**	87		92		22X1.5	29	
1.9 D,1.9 TD	*280*	D	1929	149B2.000, 149B1.000	M		+ Cable	10/87 ▸ 06/90	5934064	**819828**	83	87	88	92	22X1.5	29	
1.9 D,1.9 TD	*280*	D	1929	149B1.000, 149B2.000	M			05/92 ▸ 01/94	7745216	**820030**	84		95				
2.5 D,2.5 TD	*280*	D	2445	8144-21, 8144-61	M		+ Cable	06/85 ▸ 06/90	5934064	**819828**	83	87	88	92	22X1.5	29	
2.5 D,2.5 TD	*280*	D	2445	8144-21, 8144-61	M			05/92 ▸ 01/94	7745216	**820030**	84		95				
2.5 D	*280*	D	2500	CRD93	M		+ Cable	06/85 ▸ 06/90	5934064	**819828**	83	87	88	92	22X1.5	29	
2.5 D	*280*	D	2500	CRD93	M			05/92 ▸ 01/94	7745216	**820030**	84		95				
Ducato (230) (94>2001)																			
2.0,2.0 i	*230/AGMF/AGMP/AGMS/AGMT AGMU/AGWT/AHMF/AHMP/BGMA BGMC/BGMD/BGMF/BGMH/BGMN BGMP/BGMQ/BGMS/BGWN/BGWS BGWT/CGMA/CGMC/CGMD/CGMF CGMH/CGMM/CGMN*	E	1998	XU10J2U/W2, XU102CU/W2	M	+		02/94 ▸ 12/01	7738581	**819827**	83	87	88	92	22X1.5	29	
2.0,2.0 i	*230/AGMF/AGMP/AGMS/AGMT AGMU/AGWT/AHMF/AHMP/BGMA BGMC/BGMD/BGMF/BGMH/BGMN BGMP/BGMQ/BGMS/BGWN/BGWS BGWT/CGMA/CGMC/CGMD/CGMF CGMH/CGMM/CGMN*	E	1998	XU10J2U/W2, XU102CU/W2	M	-		02/94 ▸ 12/01	1307077080	**820242**	82		87		22X1.5	29	
1.9 D,1.9 TD	*230/0NMQ/AMMC/AMMD/AMMF AMMQ/ANMA/ANMF/ANMP/ANMQ BLMA/BNMA/BNMF/BNMM/BNMQ ENMF*	D	1905	XUD9TEF/W3, XUD9A/K	M	+/-		06/98 ▸ 12/01	7738581	**819827**	83	87	88	92	22X1.5	29	

• **New** Nouveau **Nuevo** Novo **Nuovo** Nieuw **Neu** Yeni Новый Nou

			Type Ctr.		cc			AC			OE	Valeo	(°)C T1	T2	T3	T4	COD.	mm
FIAT (.../...)																		
Ducato (230) (94>2001) (.../...)																		
1.9 D,1.9 TD	*230/AAMA/AAMB/AAMD/AAMF AAMQ/AAMR/ABMA/ABMB/ABMD ABMF/ABMP/ABMQ/ABMR/ACMA ACMD/ACMF/BBMA/BBMD/BBMF BBMN/BBMP/BBMQ/BBMR/BCMA BCMD/BCMF/BCMQ/EAMF/EBMF*	D	1929	230A4.000, 230A3.000 230A2.000		M	+/-		02/94 ▸ 12/01	7738581	**819827**	83	87	88	92	22X1.5	29
2.5 D,2.5 TD	*230/ADMF/ADMT/ADMU/AEMP AEMT/AEMU/AFMP/BAMF/BDMA BDMB/BDMD/BDMF/BDMG/BDMH BDMN/BDMQ/BDMR/BDMS/BDMT BEMA/BEMB/BEMD/BEMF/BEMG BEMH/BEMN/BEMQ/BEMR/BEMS BEMT/BFMA/BFMB/BFMD/BFMF BFMG/BFMH/BFMN/BFMQ/BFMR BFMS/BLWF/CDMA/CDMB/CDMD CDME/CDMF/CDMG/CDMH/CDML CDMM/C*	D	2499	8140-47, 8140-47R, 8140-67		M	+/-		02/94 ▸ 12/01	7738581	**819827**	83	87	88	92	22X1.5	29
2.8 JTD,2.8 TDi	*230/ALMP/ALMT/ALWP/ALWT APMF/APMP/APWP/BLMA/BLMF BLMH/BLMM/BLMN/BLMP/BLMQ BLMS/BLMT/BLMU/BLWA/BLWF BLWN/BLWQ/BLWS/BLWT/BPMA BPMF/BPMN/BPMP/BPMS/BPMT BPWD/BPWF/CEMN/CIWH/CLMA CLMB/CLME/CLMF/CLMH/CLML CLMM/CLMN/CLWA/CLWF/CLWG CLWH/CLWN/CPMA/CPME/CPMF CPML/C*	D	2798	8140-43, 8140-43S		M	+/-		01/98 ▸ 12/01	7738582	**820031**	87	92	92	97	22X1.5	29
2.8 D,2.8 TDi	*233CIMN, 230/AIMF/AIMT AIMU/ALMP/ALMT/ALWP/ALWT BIMA/BIMC/BIMD/BIMF/BIMH BIMM/BIMN/BIMP/BIMQ/BIMS BIMT/BLMA/BLMF/BLMH/BLMM BLMN/BLMP/BLMQ/BLMS/BLMT BLMU/BLWA/BLWF/BLWN/BLWQ BLWS/BLWT/CEMN/CIMA/CIME CIMF/CIMH/CIML/CIMM/CIMN CIWA/CIWF/CIWH/CIWN/CLMA CLMB/CL*	D	2798	8140-63, 8140-43		M	+/-		01/98 ▸ 12/01	7738581	**819827**	83	87	88	92	22X1.5	29
2.8 JTD	*230*	D	2798	8140-43S		A	+/-		05/01 ▸ 12/01	7738582	**820031**	87	92	92	97	22X1.5	29
Ducato (2002>2006)																		
2.8 TD	*244/APMP/APMR/BPMF/BPMP BPWN/BPWR*	D	2798	8140-43		M			01/02 ▸	7738582	**820031**	87	92	92	97	22X1.5	29
Duna																		
1.1	*146/A754/A755/A7CT*	E	1116	146A6.000		M			03/87 ▸	5992746	**819774**	87		92		22X1.5	29
1.3	*146/AW54/AW55/AWCT*	E	1301	146A5.000		M			03/87 ▸	5992746	**819774**	87		92		22X1.5	29
1.7 D	*146/AF54/AF55/AFCT*	D	1697	149B3.000		M		+ Cable	03/87 ▸	7576281	**819775**	83	87	88	92	22X1.5	29
Fiorino (146) (88>93)																		
-	*146/C4/CG43/CG53, 16C/G43D/G53D*	E	1116	146A9.000		M			03/88 ▸ 06/93	5992746	**819774**	87		92		22X1.5	29
-	*146/AW53, 16A/W52F/W53F*	E	1301	146A5.000		M			03/88 ▸ 06/93	5992746	**819774**	87		92		22X1.5	29
-	*146A953*	E	1498	149C1.000		M			07/90 ▸ 06/93	5992746	**819774**	87		92		22X1.5	29
-	*146CH*	D	1301	146B1.000		M		+ Cable	07/90 ▸ 06/93	7576281	**819775**	83	87	88	92	22X1.5	29
-	*146/CI53/CL53, 16A/F43D/F52F/F53D F53E*	D	1697	146B2.000, 149B3.000 149B4.046		M		+ Cable	03/88 ▸ 06/93	7576281	**819775**	83	87	88	92	22X1.5	29
Fiorino (146) (93>2000)																		
-	*146/RA52/RA53*	E	1301	146A5.000		M	-		08/93 ▸ 12/94	5992746	**819774**	87		92		22X1.5	29
-	*146/RB52/RB53/RE52/RE53*	E	1372	146C5.000, 146D5.000		M	+/-		08/93 ▸ 09/00	5992746	**819774**	87		92		22X1.5	29
-	*146/RB52/RB53/RE52/RE53*	E	1372	146C5.000, 146D5.000		M	-		08/93 ▸ 09/00	46477717	**820031**	87	92	92	97	22X1.5	29
LX	*146/RC52/RC53/RF*	E	1581	146C6.000, 146D6.000		M	+/-		08/93 ▸ 09/00	46477717	**820031**	87	92	92	97	22X1.5	29
LX	*146/RC52/RC53*	E	1581	146C6.000		M			08/93 ▸ 09/00	5992746	**819774**	87		92		22X1.5	29

• **New** Nouveau **Nuevo** Novo **Nuovo** Nieuw **Neu** Yeni Новый Nou

		Type Ctr.		cc			AC			OE	Valeo	(°)C T1	T2	T3	T4	COD.	mm	
FIAT (.../...)																		
Fiorino (146) (93>2000) (.../...)																		
-	*146/RD52/RD53*	D	1697	146B2.000	M	+		08/93 ▸ 09/00	46478033	**819827**	83	87	88	92	22X1.5	29	
-	*146/RD52/RD53*	D	1697	146B2.000	M	-	+ Cable	08/93 ▸ 09/00	7576281	**819775**	83	87	88	92	22X1.5	29	
-	*146RH53*	D	1698	146D7.000	M	+		06/96 ▸ 09/00	46478033	**819827**	83	87	88	92	22X1.5	29	
-	*146RH53*	D	1698	146D7.000	M	-	+ Cable	06/96 ▸ 09/00	7576281	**819775**	83	87	88	92	22X1.5	29	
Scudo (95>2003)																		
1.6 i	*220/WG5/XG5/XG59/YG5/YH5/ZG5*	E	1581	220A2.000	M			07/95 ▸	9629968880	**819752**	92		97		22X1.5	29	
1.9 D	*220/XM50/YM5/ZM5*	D	1868	DW8/W3	M			07/96 ▸	9629968880	**819752**	92		97		22X1.5	29	
1.9 D,1.9 TD	*220/WH5C/XH51/XH5A/XH5B XH50/YH5/YH5C/ZE5/ZE5A ZF5/ZH5/ZH5A/ZH5B*	D	1905	XUD9TEF/K, XUD9A/K, XUD9TEF/L3, XUD9TEF/W3	M			07/96 ▸	9629968880	**819752**	92		97		22X1.5	29	
Strada Pick Up																		
Trekking	*178EXG*	E	1242	178B5.000	M	+		03/99 ▸	46477717	**820031**	87	92	92	97	22X1.5	29	
Trekking	*178EXG*	E	1242	178B5.000	M	-		03/99 ▸	5992746	**819774**	87		92		22X1.5	29	
-	*178/EX/EXH*	D	1697	176A3.000, 176A3.000F	M	+		03/99 ▸	46478033	**819827**	83	87	88	92	22X1.5	29	
-	*178/EX/EXH*	D	1697	176A3.000, 176A3.000F	M	-		03/99 ▸	5992746	**819774**	87		92		22X1.5	29	
FORD																		
Escort (80>86)																		
1.1		E	1117	GPA, GMA	M			08/80 ▸ 02/86	7001605	**820214**	95	105	100	110	22X1.5	29	
1.6 i	*GAA*	E	1597	L4B	M			07/85 ▸ 12/85	7001605	**820214**	95	105	100	110	22X1.5	29	
1.6,1.6 Turbo,1.6 i		E	1597	LUE, LRA, LNA, LUA	M			08/80 ▸ 02/86	7001605	**820214**	95	105	100	110	22X1.5	29	
1.6	*AVA*	E	1598	L3	M			03/81 ▸ 02/86	7001605	**820214**	95	105	100	110	22X1.5	29	
1.6		E	1598	LPA	A			08/80 ▸ 02/86	7001605	**820214**	95	105	100	110	22X1.5	29	
Escort (86>90)																		
1.3		E	1297	JLA	M			01/86 ▸ 1990	7001611	**819785**	97		102		22X1.5	29	
1.3	*AVF, GAF*	E	1297	JBA	M			07/88 ▸ 09/90	7001605	**820214**	95	105	100	110	22X1.5	29	
1.4,1.4 i	*AVF, GAF, ALF*	E	1392	F6B, FUC, F6D, FUA, FU	M			01/86 ▸ 09/90	7001605	**820214**	95	105	100	110	22X1.5	29	
1.4,1.4 i	*GAF*	E	1392	FU, FUA	M			01/86 ▸ 1990	7001611	**819785**	97		102		22X1.5	29	
1.6,1.6 i		E	1597	LUC, LRB	M			01/86 ▸ 1990	7001611	**819785**	97		102		22X1.5	29	
1.6 i	*ALF*	E	1597	LJB	M			08/89 ▸ 07/90	7001605	**820214**	95	105	100	110	22X1.5	29	
1.6		E	1597	LUC	A			01/86 ▸ 1990	7001611	**819785**	97		102		22X1.5	29	
1.6 D		D	1608	LT	M			01/86 ▸ 1989	1646398	**819784**	88		93		22X1.5	29	
Escort (90>94)																		
1.3 i	*ABLXE, ANLXE, AVL, AAL/XF*	E	1299	J6A	M			05/91 ▸ 12/94	7001605	**820214**	95	105	100	110	22X1.5	29	
1.4,1.4 i	*AAL/BC/CC/CH, ALLCG, ABL BC/CC/CH, AVLCC, ANL/BE CC*	E	1392	F6G, FUH, F6F	M	+		09/90 ▸ 12/94	7001611	**819785**	97		102		22X1.5	29	
1.4,1.4 i	*AAL/BC/CC/CH, ALLCG, ABL BC/CC/CH, ANL/3L/BE/CC GAL, AVL//CC*	E	1392	FUH, F6G, F6F, F4B	M	- +		09/90 ▸ 12/94	7001605	**820214**	95	105	100	110	22X1.5	29	
1.6,1.6 i	*AAL/DC/FC/GC, ABL/DC/FC GC, ALL//GG, ANL/DF/FF/GC*	E	1597	LJF, LJE, LUJ, LUK	M	+/-		09/90 ▸ 12/94	7001605	**820214**	95	105	100	110	22X1.5	29	
1.6,1.6 i	*AAL/DC/FC/GC, ALLGG, ABL DC/FC/GC, ANL/DF/FF/GC*	E	1597	LUK, LUJ, LJE, LJF	M	+/-		09/90 ▸ 12/94	7001611	**819785**	97		102		22X1.5	29	
1.6	*AALEE*	E	1597	LUK	A	+		09/90 ▸ 12/94	7001611	**819785**	97		102		22X1.5	29	
1.6	*AALEE*	E	1597	LUK	A	-		09/90 ▸ 12/94	7001605	**820214**	95	105	100	110	22X1.5	29	
Escort (95>2001)																		
1.3 i	*AAL/6F/XE, AFLXE, ABL/6E/XE, AVL ANL//6H*	E	1299	J6A, J4	M	-		01/95 ▸ 09/01	7001611	**819785**	97		102		22X1.5	29	
1.4 i	*ABL3H, AFL3J, ALL3K, ANL3L, AVL3 AAL/3J*	E	1392	F4B	M	+		01/95 ▸ 09/01	7001609	**819784**	88		93		22X1.5	29	
1.4 i	*ABL3H, AFL3J, ALL3K, ANL3L, AVL3 AAL/3J*	E	1392	F4B	M	+		05/96 ▸ 09/01	7001605	**820214**	95	105	100	110	22X1.5	29	
1.4 i	*ABL3H, AFL3J, ALL3K, ANL3L, AVL3 AAL/3J*	E	1392	F4B	M	-		01/95 ▸ 04/96	7001611	**819785**	97		102		22X1.5	29	
1.6 i	*AAL/WL, AFLWL, ALLWM, ANLWM, ABL WK*	E	1597	L1K, L1H, L1E	M	+		01/95 ▸ 06/95	7001605	**820214**	95	105	100	110	22X1.5	29	

• **New** Nouveau **Nuevo** Novo **Nuovo** Nieuw **Neu** Yeni Новый Nou

		Type Ctr.		cc		AC			OE	Valeo	(°)C T1	T2	T3	T4	COD.	mm
FORD (.../...)																
Escort (95>2001) (.../...)																
1.6 i	AAL/WL, AFLWL, ALLWM, ANLWM, ABL WK	E	1597	L1H, L1K, L1E	M	-		01/95 ▸ 04/96	7001611	**819785**	97		102		22X1.5	29
1.6 i	ABLAM, AFLAM, ALLAN, ANLAN, AAL/AM	E	1597	L1K	A	+		01/95 ▸ 06/95	7001605	**820214**	95	105	100	110	22X1.5	29
1.6 i	ABLAM, AFLAM, ALLAN, ANLAN, AAL/AM	E	1597	L1K	A	-		01/95 ▸ 04/96	7001611	**819785**	97		102		22X1.5	29
1.8 i	ABLRK, AFLRK, AAL/RK, ANLRK, ALL RK	E	1796	RDA, RQB	M	+		01/95 ▸ 06/95	7001605	**820214**	95	105	100	110	22X1.5	29
1.8 i	AAL/9M/RK, ABL/9M/RK, AFL/9M/RK ALL//90/RK, ANL/9M/RK	E	1796	RDA, RKC, RQB	M	-		01/95 ▸ 04/96	7001611	**819785**	97		102		22X1.5	29
2.0 i 16V	ABL//4Y0	E	1998	N7A	M			08/95 ▸ 08/96	7001611	**819785**	97		102		22X1.5	29
1.8 D,1.8 TD	AAL/1M/7L/97/BN, ABL/1L 7K/7KC/97/BN/BNC, AFL/1L 7K/97/BN, ANL/1N/7N/97/BN AVL//18	D	1753	RTH, RFS, RV, RFD	M	+/-		01/95 ▸ 03/99	7001610	**820210**	105		110		22X1.5	29
Fiesta (83>89)																
1.4		E	1392	FUA	M			01/86 ▸ 1989	7001611	**819785**	97		102		22X1.5	29
1.6		E	1597	LUC	M			08/87 ▸ 1989	7001611	**819785**	97		102		22X1.5	29
Fiesta (89>95)																
1.4,1.4 i	FAJ/DC/LC/MC/MD/ME, FBJ DB/LB/MB/MC/MD	E	1392	FUF, F6E	M	+/-		02/89 ▸ 01/94	7001611	**819785**	97		102		22X1.5	29
1.4,1.4 i	FAJ/DC/LC/MC/MD/ME, FBJ DB/LB/MB/MC/MD	E	1392	FUF, F6E	M	-		08/90 ▸ 01/94	7001605	**820214**	95	105	100	110	22X1.5	29
1.4	FAJEC, FBJEB	E	1392	FUF	A	+/-		02/89 ▸ 05/91	7001611	**819785**	97		102		22X1.5	29
1.4	FAJEC, FBJEB	E	1392	FUF	A	-		08/90 ▸ 05/91	7001605	**820214**	95	105	100	110	22X1.5	29
1.6,1.6 i,1.6 i 16V 1.6 i Turbo	FAJ/6I/FC, FBJ//6I/FB/GE TTF	E	1597	LUH, LJD, LNA, LJC, L1G	M	+/-		02/89 ▸ 07/95	7001611	**819785**	97		102		22X1.5	29
1.6,1.6 i,1.6 i Turbo	FAJ/FC, FBJ//FB/GE/TTF	E	1597	LUH, LJD, LNA, LJC	M	-		08/90 ▸ 01/94	7001605	**820214**	95	105	100	110	22X1.5	29
1.8 i 16V	FAJ/3G/4J, FBJ//4G/4H	E	1796	RQC, RDB	M	+		02/92 ▸ 07/95	7001611	**819785**	97		102		22X1.5	29
Fiesta (95>99)																
1.2 i 16V	JASDHA, JBSDHA	E	1242	DHA	M	+		08/95 ▸ 09/99	7001611	**819785**	97		102		22X1.5	29
1.2 i 16V	JASDHA	E	1242	DHA	A	+		08/95 ▸ 08/99	7001611	**819785**	97		102		22X1.5	29
1.4 i 16V	JASFHA, JBSFHA	E	1388	FHA	M	+		01/96 ▸ 08/99	7001611	**819785**	97		102		22X1.5	29
1.8 D	JAS/RTJ/RTK, JBS/RTJ/RTK, JVS/RTJ RTK	D	1753	RTJ, RTK	M	-		08/95 ▸ 08/99	7001608	**819784**	88		93		22X1.5	29
Focus (2001>2003)																
1.8 i 16V	DBW, DFW, DNW, DAW	E	1796	EYDC, EYDA	M			11/01 ▸	7001611	**819785**	97		102		22X1.5	29
1.8 i 16V	DFW	E	1796	EYDA	A			11/01 ▸	7001611	**819785**	97		102		22X1.5	29
2.0 i 16V	DBW, DFW, DNW, DAW	E	1988	EDDC, EDDA	M			11/01 ▸	7001611	**819785**	97		102		22X1.5	29
Galaxy (95>2000)																
2.0 i	WGRNSE	E	1998	NSE	M	+		05/95 ▸ 03/00	7210733	**•820829**	120		112		20	
2.0 i	WGRNSE	E	1998	NSE	A	+		05/95 ▸ 03/00	7210733	**•820829**	120		112		20	
2.3 i 16V	WGRY5	E	2295	Y5	M			01/97 ▸ 03/00	7215818	**820035**	84	91	95	102	22X1.5	29
2.3 i 16V	WGRY5	E	2295	Y5	A			01/97 ▸ 03/00	7215818	**820035**	84	91	95	102	22X1.5	29
2.8 i VR6	WGRAAA	E	2792	PW	M	+/-		05/95 ▸	7215818	**820035**	84	91	95	102	22X1.5	29
2.8 i VR6	WGRAAA	E	2792	PW	A	+/-		05/95 ▸	7215818	**820035**	84	91	95	102	22X1.5	29
1.9 TDi	WGR/1Z1/AFN	D	1896	1.9N, 1.9P	M	+/-		11/95 ▸	7215818	**820035**	84	91	95	102	22X1.5	29
Galaxy (2000>)																
2.0 i		E	1998	NSE	M	+/-		01/01 ▸ 04/06	7210733	**•820829**	120		112		20	
2.8 i V6		E	2792	PW-204	M	+/-		04/00 ▸	7215818	**820035**	84	91	95	102	22X1.5	29
2.8 i V6		E	2792	PW-204	A	+/-		04/00 ▸	7215818	**820035**	84	91	95	102	22X1.5	29
1.9 TDi		D	1896	1.9TI, 1.9TC	M	+/-		04/00 ▸	7215818	**820035**	84	91	95	102	22X1.5	29
1.9 TDi		D	1896	1.9TC	A	+/-		04/00 ▸	7215818	**820035**	84	91	95	102	22X1.5	29
Mondeo (93>2000)																
1.8 TD	BFP, BNP, BAP	D	1753	RFN	M			08/96 ▸ 08/00	7001608	**819784**	88		93		22X1.5	29
Orion (83>90)																
1400,1400 i		E	1392	F6B, FUA	M			02/86 ▸ 08/90	7001611	**819785**	97		102		22X1.5	29
1600,1600 i		E	1597	LR, LUA	M			02/86 ▸ 08/90	7001611	**819785**	97		102		22X1.5	29

• **New** Nouveau **Nuevo** Novo **Nuovo** Nieuw **Neu** Yeni Новый Nou

			CC			AC			OE	Valeo	(°)C T1	T2	T3	T4	COD.	○: mm	
FORD (.../...)																	
Orion (83>90) (.../...)																	
1600		E	1597	LUA	A			02/86 ▸ 08/90	7001611	**819785**	97		102		22X1.5	29	
Orion (90>93)																	
1.4,1.4 i	*AFL*	E	1392	F6G, F6F, FUH	M	+		09/90 ▸ 09/93	7001611	**819785**	97		102		22X1.5	29	
1.4,1.4 i	*AFL*	E	1392	FUH, F6G, F6F	M	+		09/90 ▸ 09/93	6489740	**820211**	112		119		22X1.5	29	
1.4,1.4 i	*AFL*	E	1392	F6G, FUH, F6F	M	-		09/90 ▸ 09/93	7001605	**820214**	95	105	100	110	22X1.5	29	
1.6,1.6 i	*AFL*	E	1597	L1E, LUJ, LUK, LJF, LJE	M	+/-		09/90 ▸ 09/93	7001611	**819785**	97		102		22X1.5	29	
1.6,1.6 i	*AFL*	E	1597	LUK, LJE, LUJ, LJF, L1E	M	+/-		09/90 ▸ 09/93	7001605	**820214**	95	105	100	110	22X1.5	29	
1.6 i	*AFL*	E	1597	LJF, LJE	M	+		09/90 ▸ 01/92	7001609	**819784**	88		93		22X1.5	29	
1.6	*AFL*	E	1597	LUK, LUJ	M	+		09/90 ▸ 09/93	6489740	**820211**	112		119		22X1.5	29	
1.8 i	*AFL*	E	1796	RQB, RDA	M	+		01/92 ▸ 09/93	7001605	**820214**	95	105	100	110	22X1.5	29	
1.8 i	*AFL*	E	1796	RQB, RDA	M	-		01/92 ▸ 09/93	7001611	**819785**	97		102		22X1.5	29	
Scorpio (85>92)																	
1800	*GAE*	E	1796	REC	M			03/85 ▸ 04/87	1652990	**819785**	97		102		22X1.5	29	
2000,2000 i	*GAE*	E	1993	NRA, NEL	M			03/85 ▸ 10/89	1652990	**819785**	97		102		22X1.5	29	
2000,2000 i	*GAE*	E	1993	NEL, NRA	A			03/85 ▸ 10/89	1652990	**819785**	97		102		22X1.5	29	
2000,2000 i	*GAE, GFK*	E	1998	N8B, N9B	M			11/89 ▸ 01/92	1652990	**819785**	97		102		22X1.5	29	
2000,2000 i	*GAE*	E	1998	N9B, N8B	A			11/89 ▸ 01/92	1652990	**819785**	97		102		22X1.5	29	
2400 i		E	2394	ARC, ARD	M			10/88 ▸ 01/92	1652990	**819785**	97		102		22X1.5	29	
2400 i		E	2394	ARD, ARC	A			10/88 ▸ 01/92	1652990	**819785**	97		102		22X1.5	29	
2800 i		E	2792	PRE	M			03/85 ▸ 10/86	6142676	**819785**	97		102		22X1.5	29	
2800 i		E	2792	PRE	A			03/85 ▸ 10/86	6142676	**819785**	97		102		22X1.5	29	
2900 i		E	2933	BRD, BRC	M			10/88 ▸ 01/92	1652990	**819785**	97		102		22X1.5	29	
2900 i		E	2933	BRC, BRD	A			10/88 ▸ 01/92	1652990	**819785**	97		102		22X1.5	29	
2500 D		D	2499	STR	M			11/85 ▸ 09/88	6144361	**819786**	77		88		22X1.5	29	
Sierra (87>93)																	
1.8		E	1769	R2A	M			07/88 ▸ 01/93	7001611	**819785**	97		102		22X1.5	29	
1.8		E	1769	R2A	A			07/88 ▸ 01/93	7001605	**820214**	95	105	100	110	22X1.5	29	
1.8		E	1796	RED	M			07/88 ▸ 1989	7001611	**819785**	97		102		22X1.5	29	
FORD																	
Courrier (91>96)																	
1.3,1.3 i		E	1299	JBC, J6B	M			08/91 ▸ 09/96	6186464	**819785**	97		102		22X1.5	29	
Transit (95>99)																	
2.0 i		E	1998	NSF, NSG	M			09/94 ▸ 12/99	7001605	**820214**	95	105	100	110	22X1.5	29	
Transit (2000>)																	
2.0 TDci,2.0 TDdi	*FAE/YAB/YD3, FAF/YAB/YD3 FM, FAG/YAB/YD3*	D	1998	FIFA, ABFA, F3FA, D3FA-E3	M			08/00 ▸	7001605	**820214**	95	105	100	110	22X1.5	29	
FORD																	
Escort (90>94)																	
1.8 TD	*AALIM, ANLIM*	D	1753	RFD	M	+		07/93 ▸ 12/94	7001607	**820213**	90	100	95	105			
2.0 i	*ABLC4, ABLC4V*	E	1993	N5F	M	+		03/92 ▸ 12/94	7001607	**820213**	90	100	95	105			
Escort (95>2001)																	
1.6 i	*AFLAM, ALLAN, AALAM, ABLAM, ANLAN*	E	1597	L1K, L1E, L1H	A	+		06/95 ▸ 01/98	7001607	**820213**	90	100	95	105			
1.6 i	*ABL, AALWL, ABLWK, ANLWM, AFLWL ALLWM*	E	1597	L1K, L1E, L1H	M	+		06/95 ▸ 01/98	7001607	**820213**	90	100	95	105			
1.8 TD	*AALBN, ABLBN, ANLBN AFLBN, AVL18, AFL1L ANL1N, AAL1M, ABL1L*	D	1753	RV, RFD,	M	+		01/95 ▸ 04/96	7001607	**820213**	90	100	95	105			
1.8 i	*ANL9M, AAL9M, ABL9M,ALL90, AALRK ABLRK, ALLAFL9M, ALLRK, ANLRK AFLRK*	E	1796	RKC, RDA, RQB,	M	+		06/95 ▸ 09/95	7001607	**820213**	90	100	95	105			

• **New** Nouveau **Nuevo** Novo **Nuovo** Nieuw **Neu** Yeni Новый Nou

Valeo

Thermoswitch
Thermocontact
Termocontacto
Termocontato
Termocontatto
Thermokontakt
Thermoschalter

Włącznik wentylatora
Tepelný spínač
Termokapcsoló
Termocontact
Fan müşiri
ТЕРМОДАТЧИК

		Type Ctr.		cc		AC			2 3	OE	Valeo	(°)C T1	T2	T3	T4	COD.	mm
FORD (.../...)																	
Escort (95>2001) (.../...)																	
2.0 i	*ABLC44*	E	1993	N5E	M				08/95 ▸ 12/95	7001607	**820213**	90	100	95	105		
Mondeo (93>2000)																	
1.8 TD	*GBP, BAP, BNP, BFP*	D	1753	RFN, RFM	M	+			06/93 ▸ 08/96	7001607	**820213**	90	100	95	105		
Scorpio																	
2.5 TD	*GFR, GNM, GNR, GFK, GAE*	D	2500	SCD, SCB, SCC,	M				09/93 ▸ 10/94	7001607	**820213**	90	100	95	105		
2.9 i	*GNR, GFR,*	E	2933	BRF	M				10/94 ▸ 08/96	7001607	**820213**	90	100	95	105		
2.9 i		E	2933	BRF	A				10/94 ▸ 08/96	7001607	**820213**	90	100	95	105		
HONDA																	
Accord I (76>83)																	
1600	*SJ/E81/F81*	E	1599	EG	M				08/77 ▸ 08/78	37760PB2003	**820238**	87		92		16X1.5	
1600	*SJ/B81/D81*	E	1599	EG	A				08/77 ▸ 08/78	37760PB2003	**820238**	87		92		16X1.5	
1600	*SJ/532/533/542/543/E82, SY/532/533 542/543*	E	1602	EL	M				08/78 ▸ 09/83	37760PB2003	**820238**	87		92		16X1.5	
1600	*SJ/332/333/342/343/D82, SY/332/333 342/343*	E	1602	EL	A				08/78 ▸ 09/83	37760PB2003	**820238**	87		92		16X1.5	
Accord II (83>85)																	
1600	*AC/532/533/542/543*	E	1598	EZ	M				09/83 ▸ 09/85	37773PB1003	**820333**	87		97		16X1.5	
1600	*AC/733/743*	E	1598	EZ	A				09/83 ▸ 09/85	37773PB1003	**820333**	87		97		16X1.5	
1800	*AD/533/543/544*	E	1829	ET1	M				09/83 ▸ 09/85	37773PB1003	**820333**	87		97		16X1.5	
1800	*AD/733/743/744*	E	1829	ET1	A				09/83 ▸ 09/85	37773PB1003	**820333**	87		97		16X1.5	
Accord III (85>89)																	
1.6	*CA/452/453*	E	1598	A16A1	M				10/85 ▸ 08/89	37773PH1621	**820330**	87		92		16X1.5	
1.6	*CA/462/463*	E	1598	A16A1	A				10/85 ▸ 08/89	37773PH1621	**820330**	87		92		16X1.5	
2.0,2.0 i	*CA/552/553/554/556/557 558*	E	1955	A20A3, A20A1-102, A20A4 A20A2	M				10/85 ▸ 08/89	37773PH1621	**820330**	87		92		16X1.5	
2.0,2.0 i	*CA/553/56/562/563/564/566 567/568*	E	1955	A20A1-104, A20A2, A20A4 A20A3	A				10/85 ▸ 08/89	37773PH1621	**820330**	87		92		16X1.5	
2.0 i 16V	*CA/555/559*	E	1958	B20A8, B20A2	M				02/87 ▸ 08/89	37773PH1621	**820330**	87		92		16X1.5	
Accord V (93>95)																	
1.8 i	*CC/752/753*	E	1849	F18A3	M				07/93 ▸ 06/95	37773PT3A01	**820335**	107		112		18X1.5	
2.0 i	*CC/754/755/756/757*	E	1997	F20Z1, F20Z2	M				03/93 ▸ 06/95	37773PT3A01	**820335**	107		112		18X1.5	
2.0 i	*CC/765/766/767*	E	1997	F20Z1	A				03/93 ▸ 06/95	37773PT3A01	**820335**	107		112		18X1.5	
Accord VI (CE/CF) (95>98)																	
1.8 i	*CE/751/752/753/754/755/756/757*	E	1849	F18A4, F18A3	M				07/95 ▸	37773PT3A01	**820335**	107		112		18X1.5	
1.8 i	*CE/761/765/766*	E	1849	F18A3, F18A4	A				07/95 ▸	37773PT3A01	**820335**	107		112		18X1.5	
2.0 i	*CE/854/855/856/857/858*	E	1997	F20Z1	M				07/95 ▸	37773PT3A01	**820335**	107		112		18X1.5	
2.0 i	*CE/865/866/867/868*	E	1997	F20Z1	A				07/95 ▸	37773PT3A01	**820335**	107		112		18X1.5	
2.2 i	*CE/956/957/959*	E	2156	F22Z2	M				07/95 ▸	37773PT3A01	**820335**	107		112		18X1.5	
2.2 i	*CE/966/968*	E	2156	F22Z2	A				07/95 ▸	37773PT3A01	**820335**	107		112		18X1.5	
2.0 TDi	*CF/152/153/154*	D	1994	20T2N	M				03/96 ▸	37773PT3A01	**820335**	107		112		18X1.5	
Accord VII (98>2003)																	
1.6 i	*CG/752/753/754/755*	E	1590	D16B6, D16B7	M				09/98 ▸	37760P00003	**820334**	90		95		18X1.5	
Accord VIII (2003>)																	
2.0 i	*CL/751/752/753/754/755/758/759, CM 171/172/173/174/175/176/177/178*	E	1998	K20A6	M				02/03 ▸	37760P00004	**820334**	90		95		18X1.5	
2.0 i	*CL/762/763/764/765/768/769, CM/181 182/183/184/185/186/187/188*	E	1998	K20A6	A				02/03 ▸	37760P00004	**820334**	90		95		18X1.5	
2.4 i	*CL/954/955/958/959, CM/273/274/277 278*	E	2354	K24A3	M				02/03 ▸	37760P00004	**820334**	90		95		18X1.5	
2.4 i	*CL/964/965/968/969, CM/283/284/287 288*	E	2354	K24A3	A				02/03 ▸	37760P00004	**820334**	90		95		18X1.5	

• **New** Nouveau **Nuevo** Novo **Nuovo** Nieuw **Neu** Yeni Новый Nou

			Type Ctr.		CC			AC			OE	Valeo	(°)C T1	T2	T3	T4	COD.	mm	
HONDA (.../...)																			
Accord VIII (2003>) (.../...)																			
2.2 i-CDTi 16V	*CN/152/155/272/273/274 275*	D		2204	N22A1	M			02/04 ▸		37760P00004	**820334**	90		95		18X1.5		
Accord Aerodeck (85>89)																			
2.0,2.0 i	*CA/533/534/537/538*	E		1955	A20A4, A20A3, A20A2 A20A1-102	M			10/85 ▸ 08/89		37773PH1621	**820330**	87		92		16X1.5		
2.0,2.0 i	*CA/543/544/547/548*	E		1955	A20A4, A20A3, A20A2 A20A1-104	A			10/85 ▸ 08/89		37773PH1621	**820330**	87		92		16X1.5		
Accord Aerodeck (93>97)																			
2.0 i	*CE/272/273/274/275/276/277/278*	E		1997	F20B3	M			09/93 ▸		37760P00003	**820334**	90		95		18X1.5		
2.0 i	*CE/282/283/285/286/287/288*	E		1997	F20B3	A			09/93 ▸		37760P00003	**820334**	90		95		18X1.5		
2.2 i	*CE/171/174/175/176/177/178*	E		2156	F22B5, F22B4, F22B1	M			09/93 ▸		37760P00003	**820334**	90		95		18X1.5		
2.2 i	*CE/181/184/185/186/187*	E		2156	F22B4, F22B5, F22B1	A			09/93 ▸		37760P00003	**820334**	90		95		18X1.5		
Accord coupe (91>93)																			
2.0 i	*CC/114/115*	E		1997	F20A7	M			07/91 ▸ 08/93		37773PT3A01	**820335**	107		112		18X1.5		
2.0 i	*CC124*	E		1997	F20A7	A			07/91 ▸ 08/93		37773PT3A01	**820335**	107		112		18X1.5		
Accord coupe (93>97)																			
2.0 i	*CD/914/915/916*	E		1997	F20B3	M			09/93 ▸		37760P00003	**820334**	90		95		18X1.5		
2.0 i	*CD/924/925/926*	E		1997	F20B3	A			09/93 ▸		37760P00003	**820334**	90		95		18X1.5		
2.2 i	*CD/713/714/715/716*	E		2156	F22B5, F22B4	M			09/93 ▸		37760P00003	**820334**	90		95		18X1.5		
2.2 i	*CD/723/724/725/726*	E		2156	F22B4, F22B5	A			09/93 ▸		37760P00003	**820334**	90		95		18X1.5		
Accord coupe (97>)																			
2.0 i	*CG/415/416*	E		1997	F20B5	M			06/98 ▸		37760P00003	**820334**	90		95		18X1.5		
2.0 i	*CG/425/426*	E		1997	F20B5	A			06/98 ▸		37760P00003	**820334**	90		95		18X1.5		
2.3 i	*CG315*	E		2254	F23A3	M			10/97 ▸		37760P00003	**820334**	90		95		18X1.5		
2.3 i	*CG325*	E		2254	F23A3	A			10/97 ▸		37760P00003	**820334**	90		95		18X1.5		
3.0 i V6	*CG225*	E		2997	J30A1	A			10/97 ▸ 06/02		37760P00004	**820334**	90		95		18X1.5		
Ballade																			
1300 CVCC	*SS15*	E		1335	EJ	M			1980 ▸ 1983		37760PB2003	**820238**	87		92		16X1.5		
1500 CVCC	*ST15*	E		1488	EM	M			1980 ▸ 1983		37760PB2003	**820238**	87		92		16X1.5		
Civic I (72>83)																			
1200	*SFA, SB/A/C/E*	E		1169	EB1	M			09/75 ▸ 07/79		37760PB2003	**820238**	87		92		16X1.5		
1200	*SBD, SFB*	E		1169	EB1	A			09/75 ▸ 07/79		37760PB2003	**820238**	87		92		16X1.5		
1300	*SP, SS552, SL/431/532, WC/452/552*	E		1335	EN1	M			08/79 ▸ 08/83		37760PB2003	**820238**	87		92		16X1.5		
1300	*SS252, WC252, SL/232*	E		1335	EN1	A			08/79 ▸ 08/83		37760PB2003	**820238**	87		92		16X1.5		
1500 CVCC	*102*	E		1488	ED	M			01/72 ▸ 08/79		37760PB2003	**820238**	87		92		16X1.5		
1500 CVCC	*104*	E		1488	ED	A			09/75 ▸ 08/79		37760PB2003	**820238**	87		92		16X1.5		
Civic II (83>87)																			
1200	*AL431*	E		1169	ZA	M			09/83 ▸ 08/87		37760PB2003	**820238**	87		92		16X1.5		
1300	*AG532, AJ542*	E		1342	EV2	M			09/83 ▸ 08/87		37760PB2003	**820238**	87		92		16X1.5		
1300	*AG332, AJ342*	E		1342	EV2	A			09/83 ▸ 08/87		37760PB2003	**820238**	87		92		16X1.5		
1500,1500 i	*AK543, AH/532/533/537*	E		1488	EW3, EW2, EW4	M			09/83 ▸ 08/87		37760PB2003	**820238**	87		92		16X1.5		
1500	*AK343, AH/333/733*	E		1488	EW2	A			09/83 ▸ 08/87		37760PB2003	**820238**	87		92		16X1.5		
Civic IV (91>95)																			
1.3	*EG/332/333*	E		1343	D13B2	M			09/91 ▸ 09/95		37760P00004	**820334**	90		95		18X1.5		
1.5 i	*EG/434/435/436/854/855*	E		1493	D15B2, D15Z1	M			09/91 ▸ 09/95		37760P00004	**820334**	90		95		18X1.5		
1.5 i	*EG/444/445/864/865*	E		1493	D15B2	A			09/91 ▸ 09/95		37760P00004	**820334**	90		95		18X1.5		
1.6 i,1.6 i 16V	*EG/538, EH/954/958*	E		1590	D16A7, D16Z6, D16Z7	M			09/91 ▸ 09/95		37760P00004	**820334**	90		95		18X1.5		
1.6 i	*EH168*	E		1590	D16Z7	A			09/91 ▸ 09/95		37760P00004	**820334**	90		95		18X1.5		
1.6 i	*EG/639/959*	E		1595	B16A2	M			09/91 ▸ 09/95		37760P00004	**820334**	90		95		18X1.5		
Civic V (MA/MB) (95>2001)																			
1.4 i	*MA/871/872/873/874/875/876/877, MB 273/274/275/276*	E		1396	D14A8, D14A7, D14A2, D14A5	M			01/95 ▸		37760P00003	**820334**	90		95		18X1.5		
1.4 i	*MA/882/883/884/885/886, MB/285/286*	E		1396	D14A8, D14A2	A			01/95 ▸		37760P00003	**820334**	90		95		18X1.5		
1.5 i	*MA/971/972/973, MB/373/374*	E		1493	D15Z8, D15Z3	M			01/95 ▸		37760P00003	**820334**	90		95		18X1.5		

• **New** Nouveau **Nuevo** Novo **Nuovo** Nieuw **Neu** Yeni Новый Nou

		Type Ctr.		cc			AC			OE	Valeo	(°)C T1	T2	T3	T4	COD.	mm	
HONDA (.../...)																				
Civic V (MA/MB) (95>2001) (.../...)																				
1.6 i	*MB/172/173/175/176/177*	E	1590	D16Y2, D16Y3	M			01/95 ▸ 06/96	37760P00003	**820334**	90		95		18X1.5		
1.6 i	*MB/182/184/185/485*	E	1590	D16Y3	A			01/95 ▸	37760P00003	**820334**	90		95		18X1.5		
1.6 i	*MB/476/477/485*	E	1595	D16B2	M			07/96 ▸	37760P00003	**820334**	90		95		18X1.5		
1.6 i	*MB/486/487*	E	1595	D16B2	A			07/96 ▸	37760P00003	**820334**	90		95		18X1.5		
1.8 i	*MB673*	E	1797	D18C4	M			07/96 ▸	37760P00004	**820334**	90		95		18X1.5		
Civic V (EJ*) (96>2000)																				
1.6 i	*EJ/611/612/613/614/616/617/618/619 715/716/810/811/814/815/817/818/819*	E	1590	D16Y6, D16Y7, D16Y8	M			03/96 ▸	37760P00004	**820334**	90		95		18X1.5		
1.6 i	*EJ/621/622/623/624/626/627/628/629 725/726/820/821/824/825/827/829*	E	1590	D16Y6, D16Y8, D16Y7	A			03/96 ▸	37760P00004	**820334**	90		95		18X1.5		
Civic V (EJ/EK) (95>2001)																				
1.4 i	*EJ/933/934/954*	E	1396	D14A4, D14A3	M			10/95 ▸	37760P00004	**820334**	90		95		18X1.5		
1.4 i	*EJ/943/944/964*	E	1396	D14A4	A			10/95 ▸	37760P00004	**820334**	90		95		18X1.5		
1.5 i	*EK/336/356*	E	1493	D15Z6	M			10/95 ▸	37760P00004	**820334**	90		95		18X1.5		
1.5 i	*EK/346/366*	E	1493	D15Z6	A			10/95 ▸	37760P00004	**820334**	90		95		18X1.5		
1.6 i	*EK157*	E	1590	D16Y8	M			10/95 ▸	37760P00004	**820334**	90		95		18X1.5		
1.6 i	*EK/146/167*	E	1590	D16Y8, D16Y5	A			10/95 ▸	37760P00004	**820334**	90		95		18X1.5		
1.6 i	*EM1, EK/436/456*	E	1595	B16A2, B16A-155, B16A-185	M			10/95 ▸	37760P00004	**820334**	90		95		18X1.5		
Civic (EP) (2001>)																				
1.4 i 16V,1.4 i Sport 16V	*ES453, EP/132/134/135/136 137, EU/572/574/771/772 774/776*	E	1396	D14Z6, D14Z5	M			04/01 ▸	37760P00004	**820334**	90		95		18X1.5		
1.4 i 16V	*ES463, EP/145/146, EU/584 784/786*	E	1396	D14Z5, D14Z6	A			04/01 ▸	37760P00004	**820334**	90		95		18X1.5		
1.6 i VTEC 16V	*EP/232/234/235/236/237 238/239, ES/553/554/555 556/557/559, EU/672/674 677/872/874/877*	E	1590	D16W7, D16V1	M			04/01 ▸	37760P00004	**820334**	90		95		18X1.5		
1.6 i VTEC 16V	*EP/242/244/245/246/247 248, ES/563/564/565/566 567/569, EU/682/684/687 882/884/887*	E	1590	D16W7, D16V1	A			04/01 ▸	37760P00004	**820334**	90		95		18X1.5		
1.7 i 16V,1.7 i VTEC 16V	*EM/213/215/218/219*	E	1668	D17A9, D17A8	M			04/01 ▸	37760P00003	**820334**	90		95		18X1.5		
1.7 i 16V,1.7 i VTEC 16V	*EM/223/225/228/229*	E	1668	D17A9, D17A8	A			04/01 ▸	37760P00003	**820334**	90		95		18X1.5		
2.0 i VTEC 16V	*EP/335/336, EV/170/179*	E	1998	K20A3, K20A2	M			09/01 ▸	37760P00003	**820334**	90		95		18X1.5		
Civic Aerodeck (97>)																				
1.4 i	*MB/873/874/875/876/877/878*	E	1396	D14A7, D14A8	M			09/97 ▸	37760P00003	**820334**	90		95		18X1.5		
1.4 i	*MB/885/887*	E	1396	D14A7, D14A8	A			09/97 ▸	37760P00003	**820334**	90		95		18X1.5		
1.5 i VTEC	*MB/974/975/976*	E	1493	D15Z8	M			09/97 ▸	37760P00003	**820334**	90		95		18X1.5		
1.6 i	*MC175*	E	1590	D16W4	M			09/97 ▸	37760P00003	**820334**	90		95		18X1.5		
1.6 i	*MC184*	E	1590	D16W3	A			09/97 ▸	37760P00003	**820334**	90		95		18X1.5		
1.6 i	*MC176*	E	1595	D16B2	M			09/97 ▸	37760P00003	**820334**	90		95		18X1.5		
1.6 i	*MC186*	E	1595	D16B2	A			09/97 ▸	37760P00003	**820334**	90		95		18X1.5		
1.8 i	*MC274*	E	1797	B18C4	M			09/97 ▸	37760P00004	**820334**	90		95		18X1.5		
Civic Shuttle (83>87)																				
1500	*AG652, AN552*	E	1488	EW2, EW2C	M			09/83 ▸ 08/87	37760PB2003	**820238**	87		92		16X1.5		
1500	*AN/352/752*	E	1488	EW2C	A			09/83 ▸ 08/87	37760PB2003	**820238**	87		92		16X1.5		
CR-V (97>2002)																				
2.0 i	*RD375*	E	1973	B20B	M			01/99 ▸ 02/02	37760P00004	**820334**	90		95		18X1.5		
2.0 i	*RD/184/185/385*	E	1973	B20B3, B20B	A			01/97 ▸ 02/02	37760P00004	**820334**	90		95		18X1.5		
CR-V (2002>2006)																				
2.0 i VTEC 16V	*RD/871/872/876/877*	E	1998	K20A4	M			03/02 ▸ 12/06	37760P00003	**820334**	90		95		18X1.5		
2.0 i VTEC 16V	*RD/881/882/886/887*	E	1998	K20A4	A			03/02 ▸ 12/06	37760P00003	**820334**	90		95		18X1.5		
FR-V (2004>2007)																				
1.7 i VTEC 16V	*BE174*	E	1668	D17A2	M			10/04 ▸ 01/07	37760P00003	**820334**	90		95		18X1.5		

• **New** Nouveau **Nuevo** Novo **Nuovo** Nieuw **Neu** Yeni Новый Nou

		Type Ctr.		CC		AC		2 3	OE	Valeo	(°)C T1	T2	T3	T4	COD.	mm	
HONDA (.../...)																					
FR-V (2004>2007) (.../...)																					
2.0 i VTEC 16V	*BE378*	E	1998	K20A4	M			10/04 ▸ 01/07	37760P00003	**820334**	90		95		18X1.5		
HR-V																					
1.6 i 16V	*GH/144/145/244/245/385 386/483/485/486*	E	1590	D16W1	A			10/98 ▸	37760P00004	**820334**	90		95		18X1.5		
1.6 i 16V,1.6 i VTEC 16V	*GH/134/135/234/235/237 238/375/376/473/475/476 477/478*	E	1590	D16W1, D16W5	M			10/98 ▸	37760P00004	**820334**	90		95		18X1.5		
Integra (DA) (86>93)																					
1.5	*DA472*	E	1493	D15A1	M			03/85 ▸ 11/89	37760PB2003	**820238**	87		92		16X1.5		
1.5	*DA482*	E	1493	D15A1	A			03/85 ▸ 11/89	37760PB2003	**820238**	87		92		16X1.5		
1.6 i 16V	*DA/175/335*	E	1590	D16A2, D16A3	M			03/85 ▸ 11/89	37760PB2003	**820238**	87		92		16X1.5		
1.6 i 16V	*DA345*	E	1590	D16A3	A			03/85 ▸ 1989	37760PB2003	**820238**	87		92		16X1.5		
Integra (DC) (97>)																					
1.8 i 16V	*DC231*	E	1797	B18C6	M			11/97 ▸	37760P00004	**820334**	90		95		18X1.5		
Jazz (81>86)																					
1.1	*AA432*	E	1100	ER3	M			02/84 ▸ 1986	37760PB2003	**820238**	87		92		16X1.5		
1.2	*VF532, AA/431/532*	E	1238	ER1, ER2	M			10/81 ▸ 1986	37760PB2003	**820238**	87		92		16X1.5		
1.2	*AA332, VF332*	E	1238	ER2, ER4	A			02/84 ▸ 1986	37760PB2003	**820238**	87		92		16X1.5		
Jazz (2002>)																					
1.2 i	*GD/573/575/577/578*	E	1243	L12A1	M			01/02 ▸	37760P00003	**820334**	90		95		18X1.5		
1.4 i	*GD/185/186/187/188*	E	1339	L13A1	A			01/02 ▸	37760P00003	**820334**	90		95		18X1.5		
1.4 i	*GD/173/175/176/177/178*	E	1339	L13A1	M			01/02 ▸	37760P00003	**820334**	90		95		18X1.5		
Logo																					
1.3 i	*GA343*	E	1343	D13B7	A			12/98 ▸	37760P00004	**820334**	90		95		18X1.5		
1.3 i	*GA/333/335*	E	1343	D13B7	M			12/98 ▸	37760P00004	**820334**	90		95		18X1.5		
Odyssey																					
2.2 i 16V	*RA/181/182*	E	2156	F22B8	A			07/97 ▸	37773PT3A01	**820335**	107		112		18X1.5		
Prelude (79>82)																					
1.6	*SN522*	E	1602	EL	M			▸ 10/82	37773PB1003	**820333**	87		97		16X1.5		
0C200001 ▸																					
1.6	*SN322*	E	1602	EL	A			▸ 10/82	37773PB1003	**820333**	87		97		16X1.5		
0C200001 ▸																					
1.6	*SN522*	E	1602	EL	M			08/79 ▸	37760PB2003	**820238**	87		92		16X1.5		
▸ 0C1999999																					
1.6	*SN322*	E	1602	EL	A			08/79 ▸	37760PB2003	**820238**	87		92		16X1.5		
▸ 0C1999999																					
Prelude II (82>87)																					
1.8	*AB/522/523/524/527*	E	1829	ET, ET2	M			11/82 ▸ 09/87	37773PB1003	**820333**	87		97		16X1.5		
1.8	*AB/722/723/727*	E	1829	ET, ET2	A			11/82 ▸ 09/87	37773PB1003	**820333**	87		97		16X1.5		
2.0 i 16V	*BA214*	E	1958	B20A1	M			09/85 ▸ 09/87	37773PH1621	**820330**	87		92		16X1.5		
Prelude III (84>92)																					
2.0,2.0 i 16V	*BA/413/414/417/418*	E	1958	B20A7, B20A5, B20A9, B20A3 B20A4	M			09/84 ▸ 1992	37773PH2004	**820330**	87		92		16X1.5		
2.0,2.0 i 16V	*BA/423/424/427/428*	E	1958	B20A9, B20A3, B20A7, B20A4	A			04/87 ▸ 1992	37773PH2004	**820330**	87		92		16X1.5		
Prelude IV (91>96)																					
2.0 i 16V	*BB314*	E	1997	F20A4	M			10/91 ▸ 09/96	37773PT3A01	**820335**	107		112		18X1.5		
2.0 i 16V	*BB324*	E	1997	F20A4	A			10/91 ▸ 09/96	37773PT3A01	**820335**	107		112		18X1.5		
2.2 i 16V	*BB/117/118*	E	2157	H22A2	M			07/92 ▸ 09/96	37773PT3A01	**820335**	107		112		18X1.5		
2.3 i 16V	*BB/215/216*	E	2259	H23A2	M			10/91 ▸ 09/96	37773PT3A01	**820335**	107		112		18X1.5		
Prelude IV (96>2001)																					
2.0 i 16V	*BB914*	E	1997	F20A4	M			10/96 ▸	37773PT3A01	**820335**	107		112		18X1.5		
2.0 i 16V	*BB924*	E	1997	F20A4	A			10/96 ▸	37773PT3A01	**820335**	107		112		18X1.5		

• **New** Nouveau **Nuevo** Novo **Nuovo** Nieuw **Neu** Yeni Новый Nou

Type Ctr.	cc		AC		2 3	OE	Valeo	(°)C T1	T2	T3	T4	COD.	mm
HONDA (.../...)													
Prelude IV (96>2001) (.../...)													
2.2 i *BB514*	E	2156	F22A2	M			10/96 ▸	37773PT3A01	**820335**	107		112		18X1.5	
2.2 i *BB524*	E	2156	F22A2	A			10/96 ▸	37773PT3A01	**820335**	107		112		18X1.5	
Quintet													
1600 *SU/552/553*	E	1602	EL	M			01/80 ▸ 1984	37760PB2003	**820238**	87		92		16X1.5	
1600 *SU/352/353*	E	1602	EL	A			01/80 ▸ 1984	37760PB2003	**820238**	87		92		16X1.5	
S2000 (99>2004)													
2.0 i VTEC 16V *AP112*	E	1997	F20C2	M			04/99 ▸	37760P00004	**820334**	90		95		18X1.5	
Shuttle													
2.2 i 16V *RA/181/182/184*	E	2156	F22B8	A			12/94 ▸ 02/98	37760P00004	**820334**	90		95		18X1.5	
HONDA													
Acty													
546 *VD/312/332*	E	546	EH	M			1982 ▸ 1987	37760PB2003	**820238**	87		92		16X1.5	
HYUNDAI													
Accent (94>99)													
1.3 i *UF2LE, VD3LE, UD2LE, VF3LE, VF2LE UD3LE, UF3LE, VA3LE, UA3LE, VA2LE*	E	1341	G4EH62	M			07/94 ▸ 09/99	2536037100	**820336**	80		85		16X1.5	
1.3 i *VA3LA, VD2LA, VF3LA, VA2LA, VD3LA*	E	1341	G4EH62	A			07/94 ▸ 09/99	2536037100	**820336**	80		85		16X1.5	
1.5 i,1.5 i 12V *UA3NE, UD2NE, UF3.E VF3.E, VD3.E, UD3NE UF2NE, UD3.E, VF3NE VA2NE, UA2NE, VD2NE VA3NE, UF3NE*	E	1495	G4EK-88, G4FK-99	M			07/94 ▸ 09/99	2536037100	**820336**	80		85		16X1.5	
1.5 i,1.5 i 12V *VA3.A, VD2NA, VA2NA UF3NA, UF2NA, UA3.A VF2.A, UA2.A, VD3NA UD2.A, VD2.A, UA3NA VF3NA, UA2NA, VA3NA UD2NA, VF2NA, VA2.A UF2.A*	E	1495	G4FK-99, G4EK-88	A			07/94 ▸ 09/99	2536037100	**820336**	80		85		16X1.5	
Excel (94>)													
1.3 *VA3LE, VD2LE, VD3LE, VA2LE*	E	1341	G4EH62	M			09/94 ▸	2536037100	**820336**	80		85		16X1.5	
1.3 *VD2LA, VA3LA, VF3LA, VA2LA*	E	1341	G4EH62	A			07/94 ▸	2536037100	**820336**	80		85		16X1.5	
1.5 12V *VA3NE, VD3NE*	E	1495	G4EK-88	M			09/94 ▸	2536037100	**820336**	80		85		16X1.5	
1.5 12V *VD3NA*	E	1495	G4EK-88	A			09/94 ▸	2536037100	**820336**	80		85		16X1.5	
Lantra (90>95)													
1.5 *JF3JE, JF2JE, KF3JE*	E	1468	G4DJJE, G4DJJA	M			05/93 ▸ 05/95	2536037100	**820336**	80		85		16X1.5	
1.5 *KF3JA, JF3JA, JF2RA*	E	1468	G4DJJE, G4DJJA	A			05/93 ▸ 05/95	2536037100	**820336**	80		85		16X1.5	
1.6 16V *KF3RE, JF3RE*	E	1596	G4CR	M			05/93 ▸ 05/95	2536037100	**820336**	80		85		16X1.5	
1.6 16V *JF3RA, KF3RA*	E	1596	G4CR	A			05/93 ▸ 05/95	2536037100	**820336**	80		85		16X1.5	
1.8 16V *JF3ME, KF3ME*	E	1836	G4CN	M			06/92 ▸ 05/93	2536033101	**820337**	85		90		16X1.5	21
1.8 16V *KF3ME, JF3ME*	E	1836	G4CN	M			05/93 ▸ 05/95	2536037100	**820336**	80		85		16X1.5	
1.8 16V *KF3MA, JF3MA*	E	1836	G4CN	A			06/92 ▸ 05/93	2536033101	**820337**	85		90		16X1.5	21
1.8 16V *KF3MA, JF3MA*	E	1836	G4CN	A			05/93 ▸ 05/95	2536037100	**820336**	80		85		16X1.5	
Pony (94>)													
1.3 i *VA3LE, VD2LE, VD3LE, VF3LE, VF2LE VA2LE*	E	1341	G4EH62	M			07/94 ▸	2536037100	**820336**	80		85		16X1.5	
1.5 i 12V *VD2NE, VA3NE*	E	1495	G4EK-88	M			09/94 ▸	2536037100	**820336**	80		85		16X1.5	
1.5 i 12V *VA3NA*	E	1495	G4EK-88	A			01/96 ▸	2536037100	**820336**	80		85		16X1.5	
Sonata (88>93)													
1.8 *BF2DE, AF2DE, BF3DE, AF3DE*	E	1795	G4CM	M			10/88 ▸ 06/93	2536033011	**820337**	85		90		16X1.5	21
1.8 *BF2DA, AF2DA, AF3DA, BF3DA*	E	1795	G4CM	A			10/88 ▸ 06/93	2536033011	**820337**	85		90		16X1.5	21

• **New** Nouveau **Nuevo** Novo **Nuovo** Nieuw **Neu** Yeni Новый Nou

			Type Ctr.		CC			AC			OE	Valeo	(°)C T1	T2	T3	T4	COD.	○: mm	
HYUNDAI (.../...)																				
Sonata (88>93) (.../...)																				
2.0,2.0 i 16V	*BF2FE, AF2FE, AF3FE BF3FE*	E		1997	G4CP, G4CPD		M			10/88 ▸ 06/93	2536033011	**820337**	85		90		16X1.5	21	
2.0,2.0 i 16V	*BF3FA, AF3FA, BF2FA AF2FA*	E		1997	G4CPD, G4CP		A			10/88 ▸ 06/93	2536033011	**820337**	85		90		16X1.5	21	
2.4 i	*BF3SE, AF2SE, AF3SE, BF2SE*	E		2351	G4CS		M			10/88 ▸ 03/91	2536033010	**820337**	85		90		16X1.5	21	
2.4 i	*AF2SA, BF2SA, AF3SA, BF3SA*	E		2351	G4CS		A			10/88 ▸ 03/91	2536033010	**820337**	85		90		16X1.5	21	
3.0 i V6	*AF3TA, BF3TA*	E		2972	G6AT		A			09/90 ▸ 06/93	2536033011	**820337**	85		90		16X1.5	21	
INNOCENTI																				
Elba																				
1.3 ▸5055671	*146CW*	E		1301	146A5.000		M			04/91 ▸	5992746	**819774**	87		92		22X1.5	29	
1.4 ie 5055671 ▸	*146EN, 146EQ*	E		1372	146C5.000, 146D5.000		M			▸ 1997	46477717	**820031**	87	92	92	97	22X1.5	29	
1.5 ie ▸5055671	*146C9*	E		1498	149C1.000		M			04/92 ▸	46477717	**820031**	87	92	92	97	22X1.5	29	
1.6 ie 5055671 ▸	*146ER*	E		1581	146D6.000		M			▸ 1997	46477717	**820031**	87	92	92	97	22X1.5	29	
1.6 ie 5055671 ▸	*146E0*	E		1591	146C6.000		M			▸ 12/94	46477717	**820031**	87	92	92	97	22X1.5	29	
1.7 D	*146E1, 146DI*	D		1697	146B2.000		M		+ Cable	10/92 ▸ 1997	7576281	**819775**	83	87	88	92	22X1.5	29	
Mille																				
1.0 ie	*146FP*	E		994	146C7.000		M			05/94 ▸	46477717	**820031**	87	92	92	97	22X1.5	29	
1.7 D	*146EI*	D		1697	146B2.000		M		+ Cable	05/95 ▸	7576281	**819775**	83	87	88	92	22X1.5	29	
LADA																				
Natacha																				
1.1	*21081*	E		1099	VAZ21081K		M			05/93 ▸	21083808800	**819759**	87		92		22X1.5	29	
1.5	*21083*	E		1499	VAZ21083K		M			05/93 ▸	21083808800	**819759**	87		92		22X1.5	29	
Niva																				
1.6	*21210, 2121*	E		1568	VAZ2121		M			03/76 ▸ 1995	21083808800	**819759**	87		92		22X1.5	29	
1.7 i	*21214, 21213, 2121*	E		1690	VAZ21044,VAZ21214		M			09/94 ▸	21083808800	**819759**	87		92		22X1.5	29	
1.9 D	*21215, 2121, 21213*	D		1905	XUD95D,XUD9L		M			07/93 ▸	21083808800	**819759**	87		92		22X1.5	29	
Sagona																				
1500,1500 i	*21099*	E		1499	VAZ21083K, VAZ21083 VAZ2108320		M			09/91 ▸	21083808800	**819759**	87		92		22X1.5	29	
Samara																				
1100	*21081, 21091*	E		1099	VAZ21081K, VAZ21081		M			07/86 ▸	21083808800	**819759**	87		92		22X1.5	29	
1300	*2108, 21080, 21090, 21091*	E		1288	VAZ2108, VAZ2108K		M			07/86 ▸	21083808800	**819759**	87		92		22X1.5	29	
1500,1500 i	*21093, 21083*	E		1499	VAZ21083K, VAZ21083 VAZ2108320		M			07/86 ▸	21083808800	**819759**	87		92		22X1.5	29	
LANCIA																				
Beta																				
1300	*828/BB/BC3/CB3*	E		1297	828B3.000		M		+ Cable	10/74 ▸ 07/78	82355032	**819768**	87		92		22x1.5	29	
1300	*828/BC/CB3*	E		1301	828B,828BB.3A0		M		+ Cable	07/78 ▸ 10/80	82355032	**819768**	87		92		22x1.5	29	
1300	*828CB3*	E		1366	828D3.000		M		+ Cable	07/81 ▸ 1985	82355032	**819768**	87		92		22x1.5	29	
1400	*828AB*	E		1438	828A2.000		M		+ Cable	1972 ▸ 11/75	82355032	**819768**	87		92		22x1.5	29	
1600	*828/AB/AC/AS/BC/BCO/BF/BSO/CB0/DB0*	E		1585	828A.000,828AC.000,828B.000		M		+ Cable	10/73 ▸ 1985	82355032	**819768**	87		92		22x1.5	29	
1800	*828/AB/AC/AS*	E		1756	828A1.000,828AC1.000		M		+ Cable	1972 ▸ 11/75	82355032	**819768**	87		92		22x1.5	29	
2.0,2000,2000 i	*828/BC/BC1/BF/BS1/CB3/DB1*	E		1995	134A5000,828B1.000,828B4.000 LANC16		M		+ Cable	03/75 ▸ 1985	82355032	**819768**	87		92		22x1.5	29	

• **New** Nouveau **Nuevo** Novo **Nuovo** Nieuw **Neu** Yeni Новый Nou

Valeo

Thermoswitch
Thermocontact
Termocontacto
Termocontato
Termocontatto
Thermokontakt
Thermoschalter

Włącznik wentylatora
Tepelný spínač
Termokapcsoló
Termocontact
Fan müşiri
ТЕРМОДАТЧИК

		Type Ctr.		cc		AC			OE	Valeo	(°)C T1	T2	T3	T4	COD.	mm
LANCIA (.../...)																
Dedra																
1.6 ie,1.6 ie 16V	*835/AA54A/AB54A/AN54A BA54A/EB54A/EB55B/EI54A EI55B*	E	1581	835A1.000, 159B9.000 835C1.000, 835A1.046 182A4.000	M	+/-		03/89 ▸ 09/99	5992746	**819774**	87		92		22X1.5	29
1.6 ie	*835/AA54A/AB54A/AN54A BA54A*	E	1581	835A1.000, 835A1.046 835C1.000	M	+	+ Cable	03/89 ▸ 06/94	7596228	**820315**	87	92	92	97	22X1.5	29
1.6 ie,1.6 ie 16V	*835/EB54A/EB55B/EI54A EI55B*	E	1581	159B9.000, 182A4.000	M	+		07/94 ▸ 09/99	46477717	**820031**	87	92	92	97	22X1.5	29
1.6 ie	*835AA54A*	E	1581	835A1.000	M	-		07/92 ▸ 06/94	82477919	**819773**	88	92	93	97	22X1.5	29
1.8 ie 16V	*835/EH54A/EH55B/FG54A FG55B*	E	1747	182A2.000, 183A1.000	M	+		03/96 ▸ 09/99	46477717	**820031**	87	92	92	97	22X1.5	29
1.8 ie 16V	*835/EH54A/EH55B/FG54A FG55B*	E	1747	182A2.000, 183A1.000	M	-		03/96 ▸ 09/99	5992746	**819774**	87		92		22X1.5	29
1.8 ie	*835/AC54A/AD54A/AT54A BC54A/BD54A/CD54A*	E	1756	835A2.046, 835C5.000 835A2.000	M	+	+ Cable	03/89 ▸ 06/94	7596228	**820315**	87	92	92	97	22X1.5	29
1.8 ie	*835/FA54A/FA55B*	E	1756	836A5.000	M	+		07/94 ▸ 09/99	46477717	**820031**	87	92	92	97	22X1.5	29
1.8 ie	*835/AC54A/AD54A/AT54A BC54A/BD54A/CD54A/FA54A FA55B*	E	1756	835A2.000, 835C5.000 835A2.046, 836A5.000	M	-		03/89 ▸ 09/99	5992746	**819774**	87		92		22X1.5	29
2.0 ie,2.0 ie Turbo	*835/AI54A/AL54A/AO54W AP54W/AQ54A/AR54A*	E	1995	835A8.046, 835A7.046 835A8.000, 835A5.000 835A7.000, 835A5.046	M	+	+ Cable	03/89 ▸ 06/94	7596228	**820315**	87	92	92	97	22X1.5	29
2.0 ie 16V,2.0 ie Turbo	*835/AO54W/AP54W/ED54A ED55B/ED55W*	E	1995	835A7.000, 836A3.000 835A7.046	M	+		12/90 ▸ 09/99	46477717	**820031**	87	92	92	97	22X1.5	29
2.0 ie,2.0 ie 16V 2.0 ie Turbo	*835/AI54A/AL54A/AO54W AP54W/AQ54A/AR54A/ED54A ED55B/ED55W*	E	1995	836A3.000, 835A5.000 835A8.000, 835A7.000 835A5.046, 835A8.046 835A7.046	M	-		03/89 ▸ 09/99	5992746	**819774**	87		92		22X1.5	29
2.0 ie	*835/AL44A/EC44A*	E	1995	835A5.046	A	+/-		12/90 ▸ 09/99	46477717	**820031**	87	92	92	97	22X1.5	29
2.0 ie	*835AL44A*	E	1995	835A5.046	A	+	+ Cable	12/90 ▸ 06/94	7596228	**820315**	87	92	92	97	22X1.5	29
1.9 TDs	*835/AG54A/AG54A//AS54A*	D	1929	160D1.000, 835A4.000	M	+/-		03/89 ▸ 06/94	46478033	**819827**	83	87	88	92	22X1.5	29
1.9 TDs	*835/AG54A/AG54A//AS54A*	D	1929	160D1.000, 835A4.000	M	+/-	+ Cable	03/89 ▸	7695951	**820232**	83	87	88	92	22X1.5	29
Delta (79>86)																
1600	*831AB06*	E	1585	831A4.000	M		+ Cable	10/82 ▸ 04/86	82355032	**819768**	87		92		22x1.5	29
Delta (86>93)																
1300	*831/AB011/AB022*	E	1301	831B.000	M	-		05/86 ▸ 1993	5992746	**819774**	87		92		22X1.5	29
1500	*831/AB014/AB025*	E	1498	831B1.000, 831A1.000	A	-		05/86 ▸ 1993	5992746	**819774**	87		92		22X1.5	29
1600 Turbo,1600 ie 1600 ie Turbo	*831/AB010/AB016/AB017 AB020/AB020S*	E	1585	831B7.000, 149C2.000 831B7.046, 831B3.000	M	+/-	+ Cable	05/86 ▸ 1993	82436409	●**819826**	87		92		22X1.5	29
1600 ie	*831/AB010/AB016*	E	1585	831B7.000, 149C2.000	M	-		05/86 ▸ 1993	5992746	**819774**	87		92		22X1.5	29
2.0 i Turbo 2.0 i Turbo 16S	*831/AB019/AB024/AB024P AB024S/AB026*	E	1995	831C5.000, 831D5.000 831C5.046, 831B5.000	M			04/86 ▸ 1993	5992746	**819774**	87		92		22X1.5	29
2.0 i Turbo	*831/AB027/AB028/AB029*	E	1995	831C5.046, 831E5.046 831E5.000	M		+ Cable	07/90 ▸ 1994	7576327	**820232**	83	87	88	92	22X1.5	29
1.9 TD	*831/AB018/AB021*	D	1929	831D1.000	M		+ Cable	04/86 ▸ 1993	7576327	**820232**	83	87	88	92	22X1.5	29
Delta (93>99)																
1.4 ie	*836/AF55A/AH55A*	E	1372	160A1.046, 836A4.000	M			03/93 ▸ 08/99	46477717	**820031**	87	92	92	97	22X1.5	29
1.6 ie,1.6 ie 16V	*836/AD55A/AO53A/AO55A AP53A/AP55A/BD55A*	E	1581	182A6.000, 835C1.000 182A4.000	M	+/-		03/93 ▸ 08/99	46477717	**820031**	87	92	92	97	22X1.5	29
1.6 ie 16V	*836/AO53A/AO55A*	E	1581	182A4.000	M			07/95 ▸ 08/99	5992746	**819774**	87		92		22X1.5	29
1.8 ie 16V	*836/AQ55A/AR53A/AR55A*	E	1747	183A1.000, 182A2.000	M	+		07/95 ▸ 08/99	46477717	**820031**	87	92	92	97	22X1.5	29
1.8 ie 16V	*836/AQ55A/AR53A/AR55A*	E	1747	182A2.000, 183A1.000	M			07/95 ▸ 08/99	5992746	**819774**	87		92		22X1.5	29
1.8 ie	*836/AE55A/AG55A/AI55A AL55A/BE55A/BI55A*	E	1756	835C4.000, 835C2.000 836A5.000, 836A6.000	M	+		03/93 ▸ 08/99	46477717	**820031**	87	92	92	97	22X1.5	29
1.8 ie	*836/AE55A/AG55A/AI55A AL55A/BE55A/BI55A*	E	1756	836A6.000, 835C2.000 836A5.000, 835C4.000	M			03/93 ▸ 08/99	5992746	**819774**	87		92		22X1.5	29
2.0 i 16V,2.0 i Turbo 16V	*836/AA55A/AB53A/AB55A CA53A/CA55A*	E	1995	836A3.000, 836A2.000	M	+		03/93 ▸ 08/99	46477717	**820031**	87	92	92	97	22X1.5	29
2.0 i 16V,2.0 i Turbo 16V	*836/AA55A/AB53A/AB55A AS53A/CA53A/CA55A*	E	1995	836A3.000, 836A2.000 175A4.000	M			03/93 ▸ 08/99	5992746	**819774**	87		92		22X1.5	29
Gamma																
2000	*830/AB2/AC2*	E	1999	830AB2	M		+ Cable	09/75 ▸ 1984	82355032	**819768**	87		92		22x1.5	29

• **New** Nouveau **Nuevo** Novo **Nuovo** Nieuw **Neu** Yeni Новый Nou

LANCIA (.../...)

Gamma (.../...)

2500,2500 i	830/AB0/AB4/AC0/AC4	E	2484	830A,830A000	M		+ Cable	09/75 ▸ 1984	82355032	**819768**	87		92		22x1.5	29
2500,2500 i	830/AB0/AB4/AC0/AC4	E	2484	830A,830A000	A		+ Cable	09/75 ▸ 1984	82355032	**819768**	87		92		22x1.5	29

Prisma

1300	831/ABOA/ABOL/ABOL1	E	1301	831B.000	M			01/83 ▸ 04/89	5992746	**819774**	87		92		22X1.5	29
1500	831/ABOB/ABON	E	1498	831B1.000	M			04/83 ▸ 04/89	5992746	**819774**	87		92		22X1.5	29
1500	831/ABOCB/ABOO	E	1498	831B1.000	A			04/83 ▸ 04/89	5992746	**819774**	87		92		22X1.5	29
1600	831ABOD	E	1585	831B6.000	M		+ Cable	04/83 ▸ 05/86	82355032	**819768**	87		92		22x1.5	29

Thema

2.0 i,2.0 i Turbo 16V 2000 ie,2000 ie 16V 2000 ie Turbo 2000 ie Turbo 16V	834/AA/AB/AB54A/AC/AC54A AI/AL/BV/CV/DL/FB54A FC54A/FC55C/GC54A/GC55C	E	1995	834F2.000, 834B2.000 834B2.246, 834B1.000 834B.146, 834C1.000 834C1.246, 834C1.146	M	+/-	+ Cable	10/88 ▸ 11/94	82436409	●**819826**	87		92		22X1.5	29
2000 ie,2000 ie 16V 2000 ie Turbo 2000 ie Turbo 16V	834/AA/AB/AB54A/AC/AC54A AI/AL/BV/CV/DL	E	1995	834C1.246, 834B2.000 834B1.000, 834C1.146 834C1.000, 834B2.246 834B.146	M	+	+ Cable	10/88 ▸ 08/92	7576327	**820232**	83	87	88	92	22X1.5	29
2.0 i,2.0 i 16V,2000 ie 2000 ie 16V,2000 ie Turbo	834/AA/AB/AB54A/AI/BV/CV FA54A/FA55C/FA64A/FA65C FB54A	E	1995	834B2.000, 834B2.246 834F1.000, 834B1.000 834B.146, 834C1.146	M	-		10/88 ▸ 11/94	5992746	**819774**	87		92		22X1.5	29
2000 ie 16V	834/AA/AI	E	1995	834B2.246, 834B2.000	A	+/-	+ Cable	10/88 ▸ 08/92	82436409	●**819826**	87		92		22X1.5	29
2000 ie 16V	834/AA/AI	E	1995	834B2.000, 834B2.246	A	+	+ Cable	10/88 ▸ 08/92	7576327	**820232**	83	87	88	92	22X1.5	29
2000 ie 16V	834/AA/AI	E	1995	834B2.000, 834B2.246	A	-		10/88 ▸ 08/92	5992746	**819774**	87		92		22X1.5	29
2800	834/AD/AF	E	2849	834E.000, 834E.146	M	+/-	+ Cable	10/88 ▸ 08/92	7576327	**820232**	83	87	88	92	22X1.5	29
2800	834/AD/AF	E	2849	834E.000, 834E.146	M	-		10/88 ▸ 08/92	5992746	**819774**	87		92		22X1.5	29
2800	834/AD/AF	E	2849	834E.146, 834E.000	A	+/-	+ Cable	10/88 ▸ 08/92	7576327	**820232**	83	87	88	92	22X1.5	29
2800	834/AD/AF	E	2849	834E.000, 834E.146	A	-		10/88 ▸ 08/92	5992746	**819774**	87		92		22X1.5	29
3.0	834FS	E	2927	F105L-K, F105L	M	+/-	+ Cable	10/88 ▸ 1991	82436409	●**819826**	87		92		22X1.5	29
2500 TD	834/AE54A/AE55C/AM54A AM55C	D	2500	8144-97S, 8144-97	M	+/-	+ Cable	10/88 ▸ 08/92	82436409	●**819826**	87		92		22X1.5	29
2500 TD	834/AE44A/AE85C/AM44A AM85C	D	2500	8144-97S, 8144-97	A	+/-	+ Cable	10/88 ▸ 08/92	82436409	●**819826**	87		92		22X1.5	29

Trevi

1300	828DB	E	1366	828D3.000	M		+ Cable	10/80 ▸ 1985	82355032	**819768**	87		92		22x1.5	29
1600	828DB	E	1585	828B.000	M		+ Cable	10/80 ▸ 1985	82355032	**819768**	87		92		22x1.5	29
1600	828DB	E	1585	828B.000	A		+ Cable	10/80 ▸ 1985	82355032	**819768**	87		92		22x1.5	29
2000,2000 i	828DB	E	1995	828B1.000,828B4.000,828B7.000	M		+ Cable	10/80 ▸ 1985	82355032	**819768**	87		92		22x1.5	29
2000,2000 i	828DB	E	1995	828B1.000,828B4.000	A		+ Cable	10/80 ▸ 1985	82355032	**819768**	87		92		22x1.5	29

Y Ipsilon (95>2000)

1.1 i	840AE1A	E	1108	176B2.000	M	+		04/97 ▸	7738582	**820031**	87	92	92	97	22x1.5	29
1.1 i	840AE1A	E	1108	176B2.000	M			04/97 ▸	7728057	**819774**	87		92		22x1.5	29
1.2 i,1.2 i 16V	840/AA/AA1A/AD1A	E	1242	840A3.000, 176B9.000	M	+		11/95 ▸	7738582	**820031**	87	92	92	97	22x1.5	29
1.2 i,1.2 i 16V	840/AA/AA1A/AD1A	E	1242	176B9.000, 840A3.000	M			11/95 ▸	7728057	**819774**	87		92		22x1.5	29
1.2 i	840AA1AA	E	1242	840A3.000	A	+		11/95 ▸	46413969	**820030**	84		95			
1.2 i	840AA1AA	E	1242	840A3.000	A			11/95 ▸	7728057	**819774**	87		92		22x1.5	29
1.4 i	840/AB1A/AC1A	E	1370	840A2.000, 840A4.000	M	+		11/95 ▸	7738582	**820031**	87	92	92	97	22x1.5	29
1.4 i	840/AB1A/AC1A	E	1370	840A2.000, 840A4.000	M			11/95 ▸	7728057	**819774**	87		92		22x1.5	29

Y10

1.0,1.0 ie	156/AA53A/AA53W/AD53A AE53A/AE53W	E	999	156A2.246, 156A2.100 156A2.000	M			01/89 ▸ 09/92	5992746	**819774**	87		92		22X1.5	29
1.1 ie	156/AG53A/AG53F/AH53A AH53W/BG53A/BH53A/CG53A	E	1108	156C.046, 176B2.000	M	+		09/92 ▸ 10/95	46477717	**820031**	87	92	92	97	22X1.5	29
1.1 ie	156/AC53A/AC53W/AG53A AG53F/AG53W/AH53A/AH53W BG53A/BH53A/CG53A	E	1108	156C.046, 176B2.000, 156C.000	M			01/89 ▸ 10/95	5992746	**819774**	87		92		22X1.5	29
1.1 ie	156/AG13A/AH13A	E	1108	156C.046, 176B2.000	A	+		09/92 ▸ 10/95	46477717	**820031**	87	92	92	97	22X1.5	29
1.1 ie	156/AC13A/AG13A/AH13A	E	1108	156C.046, 156C.000, 176B2.000	A			11/89 ▸ 10/95	5992746	**819774**	87		92		22X1.5	29
1.3 ie	156AF53A	E	1297	146A5.046	M		+ Cable	01/89 ▸ 10/95	7558930	**820314**	92	97	97	102	22X1.5	29

• **New** Nouveau **Nuevo** Novo **Nuovo** Nieuw **Neu** Yeni Новый Nou

Valeo

Thermoswitch
Thermocontact
Termocontacto
Termocontato
Termocontatto
Thermokontakt
Thermoschalter

Włącznik wentylatora
Tepelný spínač
Termokapcsoló
Termocontact
Fan müşiri
ТЕРМОДАТЧИК

		Type Ctr.		cc			AC			OE	Valeo	(°)C T1	T2	T3	T4	COD.	mm	
LANCIA (.../...)																		
Y10 (.../...)																		
1.3 ie	*156AB53A*	E	1301	156B.000	M		+ Cable	01/89 ▸ 09/92	7558930	**820314**	92	97	97	102	22X1.5	29	
Zeta																		
2.0 ie 16V	*220/AQ4/AQ5*	E	1997	EW10J4/L4	M			01/01 ▸ 08/02	9629968880	**819752**	92		97		22X1.5	29	
2.0 ie 16V	*220AL5*	E	1998	RFV	M			07/98 ▸ 12/00	9629968880	**819752**	92		97		22X1.5	29	
2.1 TD	*220AJ5*	D	2088	P8C	M			03/96 ▸ 12/00	9563868480	**819747**	92	96	97	101	22X1.5	29	
LAND ROVER																		
Defender 90 - 110																		
2.5	*LDH/AD7/AD8/HD7/HD8/MD8, LDV/AD7 AD8/BD7/BD8*	E	2494	17H	M	+		10/90 ▸	PRC3541	**819761**	92		97		22X1.5	29	
2.5	*LDH/AD7/AD8/HD7/HD8/MD8, LDV/AD7 AD8/BD7/BD8*	E	2494	17H	M			10/90 ▸	PRC3366	**819746**	95		100		22X1.5	29	
2.5 D	*LDH/AC7/AC8/HC8/MC7/MC8, LDV/AC7 AC8/BC7/BC8*	D	2495	12J	M			10/90 ▸	PRC3541	**819761**	92		97		22X1.5	29	
2.5 D	*LDH/AC7/AC8/HC8/MC7/MC8, LDV/AC7 AC8/BC7/BC8*	D	2495	12J	M			10/90 ▸	PRC3366	**819746**	95		100		22X1.5	29	
Land 110 Series I - II - III																		
2.3	*LDH/AH7/AH8/HH7/HH8/MH7/MH8*	E	2286	11H	M			10/83 ▸ 1987	PRC3366	**819746**	95		100		22X1.5	29	
2.3	*LDH/AH7/AH8/HH7/HH8/MH7/MH8*	E	2286	11H	M			10/83 ▸ 1987	PRC3541	**819761**	92		97		22X1.5	29	
2.5 D	*LDH/AC7/AC8/HC7/HC8/MC7/MC8*	D	2495	12J	M			07/84 ▸ 09/90	PRC3366	**819746**	95		100		22X1.5	29	
2.5 D	*LDH/AC7/AC8/HC7/HC8/MC7/MC8*	D	2495	12J	M			07/84 ▸ 09/90	PRC3541	**819761**	92		97		22X1.5	29	
MAZDA																		
121 (DA) (88>90)																		
1100	*DA/1321/1322/13B2*	E	1139	B1-15, B1-16	M			01/88 ▸ 10/90	F62118840	**820235**	92		97		16X1.5		
1300,1300 i	*DA/1332/13B2/13C2*	E	1324	B3-A5, B3-A6, B3-B1	M			01/88 ▸ 10/90	F62118840	**820235**	92		97		16X1.5		
323 (BD) (80>85)																		
1.1	*BD/1011/1211/1301/1311/1411*	E	1071	E1	M			08/80 ▸ 08/84	E30118840A	**820235**	92		97		16X1.5		
1.3	*BD/1031/1221/1222/1231/1232/1321 1322/1331/1332/1421/1422/1431/1432*	E	1296	E3	M			08/80 ▸ 08/84	E30118840A	**820235**	92		97		16X1.5		
1.3	*BD/1233/1323/1333/1433*	E	1296	E3	A			09/82 ▸ 08/84	E30118840A	**820235**	92		97		16X1.5		
1.5	*BD/1051/1241/1242/1252/1341/1342 1352/1442/1452*	E	1490	E5, E5-HP	M			08/80 ▸ 08/84	E30118840A	**820235**	92		97		16X1.5		
1.5	*BD/1243/1343/1443*	E	1490	E5	A			09/82 ▸ 08/84	E30118840A	**820235**	92		97		16X1.5		
1.5		E	1498	B5	M			09/82 ▸ 08/84	E30118840A	**820235**	92		97		16X1.5		
323 (BF) (85>89)																		
1.5 ▸ 436244	*BF/1261/1262/1462*	E	1490	E5	M			01/85 ▸	E50818840A	**820236**	85		90		16X1.5		
1.5 ▸ 436244	*BF1463*	E	1490	E5	A			01/85 ▸	E50818840A	**820236**	85		90		16X1.5		
1.5 ▸ 498193	*BF/1261/1262/1462*	E	1490	E5	M			01/85 ▸	E30118840A	**820235**	92		97		16X1.5		
1.5 ▸ 498193	*BF1463*	E	1490	E5	A			01/85 ▸	E30118840A	**820235**	92		97		16X1.5		
1.7 D 498194 ▸	*BF/1292/1392/1492*	D	1720	PN46	M			09/86 ▸	F8B818840A	**820235**	92		97		16X1.5		
323 Wagon (BW) (86>93)																		
1.5	*BW/1262/1263*	E	1490	E5-H5, E5-K4	M			01/86 ▸ 12/87	E30118840A	**820235**	92		97		16X1.5		
1.5	*BW/1262/1263*	E	1490	E5-H5, E5-K4	M			01/86 ▸ 12/87	E50818840A	**820236**	85		90		16X1.5		
1.5	*BW1263*	E	1490	E5-J9	A			01/86 ▸ 12/87	E30118840A	**820235**	92		97		16X1.5		
1.5	*BW1263*	E	1490	E5-J9	A			01/86 ▸ 12/87	E50818840A	**820236**	85		90		16X1.5		
1.6,1.6 i	*BW/12/1272*	E	1598	B6-82, B6-88	M			06/86 ▸ 06/87	E30118840A	**820235**	92		97		16X1.5		
1.6	*BW1273*	E	1598	B6-89	A			06/86 ▸ 06/87	E30118840A	**820235**	92		97		16X1.5		

• **New** Nouveau **Nuevo** Novo **Nuovo** Nieuw **Neu** Yeni Новый Nou

		Type Ctr.		cc		AC		2 3	OE	Valeo	(°)C T1	T2	T3	T4	COD.	mm				
MAZDA (.../...)																				
323 Wagon (BW) (86>93) (.../...)																				
1.7 D	*BW1292*	D	1720	PN-54, PN27	M			04/86 ▸	F8B818840A	**820235**	92		97		16X1.5					
503982 ▸																				
626 (GC) (82>87)																				
1600	*GC/1211/1212/1411/1412/1612*	E	1587	F6	M			11/82 ▸ 1987	E30118840A	**820235**	92		97		16X1.5					
1600	*GC/1213/1413/1613*	E	1587	F6	A			11/82 ▸ 1987	E30118840A	**820235**	92		97		16X1.5					
2000,2000 i	*GC/1222/1242/1422/1442 1622/1642*	E	1998	FE, FE-EGI	M			11/82 ▸ 1987	E30118840A	**820235**	92		97		16X1.5					
2000	*GC/1223/1623*	E	1998	FE	A			11/82 ▸ 1987	E30118840A	**820235**	92		97		16X1.5					
626 (GD) (87>92)																				
2.0 D	*GD/1262/1462*	D	1998	RF-D1	M			10/87 ▸	F8B818840A	**820235**	92		97		16X1.5					
626 (GV) (88>92)																				
2000 D	*GV1262*	D	1998	RF-D1	M			10/88 ▸	F8B818840A	**820235**	92		97		16X1.5					
208902 ▸																				
MERCEDES																				
190 (201)																				
2.3 i 16S	*201.034*	E	2299	102.983	M	-		▸ 1989	0065451524	**820207**	95		100		14X1.5					
00632 ▸																				
2.3 i 16S	*201.034*	E	2299	102.983	A	-		▸ 1989	0065451524	**820207**	95		100		14X1.5					
00632 ▸																				
2.5 i 16S	*201.035*	E	2498	102.990	A			09/88 ▸ 1993	0065451524	**820207**	95		100		14X1.5					
2.0 D	*201.122*	D	1997	601.911	M			▸ 1993	0065451524	**820207**	95		100		14X1.5					
045736 ▸																				
2.0 D	*201.122*	D	1997	601.911	A			▸ 1993	0065451524	**820207**	95		100		14X1.5					
045736 ▸																				
200/300 (124)																				
200E i	*124.021*	E	1997	102.963	M			12/84 ▸ 09/92	0065454524	**820222**	100	105	105	115	14X1.5					
200	*124.020*	E	1997	102.922	M			12/84 ▸ 02/90	0065451524	**820207**	95		100		14X1.5					
200	*124.020*	E	1997	102.922	A			12/84 ▸ 02/90	0065451524	**820207**	95		100		14X1.5					
200E i	*124.021*	E	1997	102.963	A			12/84 ▸ 09/92	0065454524	**820222**	100	105	105	115	14X1.5					
200D D	*124.120*	D	1997	601.912	M			12/84 ▸ 06/93	0065451524	**820207**	95		100		14X1.5					
200D D	*124.120*	D	1997	601.912	A			12/84 ▸ 06/93	0065451524	**820207**	95		100		14X1.5					
250D D,250D TD,250DL D	*124/.125/.127/.128*	D	2497	602.912, 602.962	M			12/84 ▸ 06/93	0065454524	**820222**	100	105	105	115	14X1.5					
250D D,250D TD,250DL D	*124/.125/.127/.128*	D	2497	602.912, 602.962	A			12/84 ▸ 06/93	0065454524	**820222**	100	105	105	115	14X1.5					
G Class (463)																				
3.0 i	*463/.207/.227/.228*	E	2962	103.987	M			09/89 ▸	0065454524	**820222**	100	105	105	115	14X1.5					
3.0 i	*463/.207/.227/.228*	E	2962	103.987	A			09/89 ▸	0065454524	**820222**	100	105	105	115	14X1.5					
5.0 i	*463.228*	E	4973	117.965	A			01/92 ▸ 07/93	0065454524	**820222**	100	105	105	115	14X1.5					
2.5 D	*463/.304/.324/.325*	D	2497	602.931	M			09/89 ▸	0065454524	**820222**	100	105	105	115	14X1.5					
3.0 TD	*463/.307/.327/.328*	D	2996	603.931	M			09/89 ▸	0065454524	**820222**	100	105	105	115	14X1.5					
3.0 TD	*463/.307/.327/.328*	D	2996	603.931	A			09/89 ▸	0065454524	**820222**	100	105	105	115	14X1.5					
3.5 TD	*463/.300/.320/.321*	D	3449	603.972	M			09/91 ▸ 09/97	0065454524	**820222**	100	105	105	115	14X1.5					
S Class (140)																				
4.2 i	*140/.042/.043*	E	4196	119.971	A			07/93 ▸ 08/98	0065451524	**820207**	95		100		14X1.5					
500 i	*140/.050/.051/.070*	E	4973	119.970	A			03/91 ▸ 06/93	0065451524	**820207**	95		100		14X1.5					
6.0 i V12	*140/.056/.057/.076*	E	5987	120.980,120.982	A			07/93 ▸ 07/99	0065451524	**820207**	95		100		14X1.5					
3.5 TD	*140.134*	D	3449	603.971	A			07/93 ▸ 08/98	0065451524	**820207**	95		100		14X1.5					
S Class (220)																				
S430L i	*220.170*	E	4266	113.941	A			09/98 ▸ 09/04	0065451524	**820207**	95		100		14X1.5					
S500L i	*220.175*	E	4966	113.960	A			09/98 ▸ 09/04	0065451524	**820207**	95		100		14X1.5					
S55 i	*220.173*	E	5439	113.986	A			01/00 ▸ 09/04	0065451524	**820207**	95		100		14X1.5					
S600L i	*220.176*	E	5513	275.950	A			09/02 ▸ 09/04	0065451524	**820207**	95		100		14X1.5					
S320CDI CDI,S320CDIL CDI	*220/.026/.126*	D	3224	613.960	A			01/00 ▸ 09/02	0065451524	**820207**	95		100		14X1.5					

• **New** Nouveau **Nuevo** Novo **Nuovo** Nieuw **Neu** Yeni Новый Nou

		Type Ctr.		cc			AC			OE	Valeo	(°)C T1	T2	T3	T4	COD.	mm
MERCEDES (.../...)																	
S Class (220) (.../...)																	
S400CDI CDI	*220/.028/.128*	D	3996	628.960	A			04/00 ▸ 09/04	0065451524	**820207**	95		100		14X1.5	
V Class (638/2)																	
V200	*638.214*	E	1998	111.948	M			10/96 ▸ 12/02	0065451524	**820207**	95		100		14X1.5	
V230	*638.234*	E	2295	111.978	M			10/96 ▸ 12/02	0065451524	**820207**	95		100		14X1.5	
V280	*638.244*	E	2792	104.900	A			10/96 ▸ 12/02	0065451524	**820207**	95		100		14X1.5	
V220 CDI	*638.294*	D	2151	611.980	M			01/99 ▸ 12/02	0065451524	**820207**	95		100		14X1.5	
V220 CDI	*638.294*	D	2151	611.980	A			01/99 ▸ 12/02	0065451524	**820207**	95		100		14X1.5	
V230TD TD	*638.274*	D	2299	601.970	M			10/96 ▸ 12/02	0065451524	**820207**	95		100		14X1.5	
MERCEDES																	
Vito (96>2003)																	
2.0 i	*638/.014/.114*	E	1998	111.948	M			01/96 ▸ 09/03	0065451524	**820207**	95		100		14X1.5	
2.0 i	*638/.014/.114*	E	1998	111.948	A			01/96 ▸ 09/03	0065451524	**820207**	95		100		14X1.5	
2.3 i	*638/.034/.134*	E	2295	111.978	M			12/96 ▸ 09/03	0065451524	**820207**	95		100		14X1.5	
2.3 i	*638/.034/.134*	E	2295	111.978	A			12/96 ▸ 09/03	0065451524	**820207**	95		100		14X1.5	
2.2 CDI	*638/.094/.194*	D	2151	611.980	M			03/99 ▸ 09/03	0065451524	**820207**	95		100		14X1.5	
2.2 CDI	*638/.094/.194*	D	2151	611.980	A			03/99 ▸ 09/03	0065451524	**820207**	95		100		14X1.5	
2.3 D,2.3 TD	*638/.064/.068/.074/.078 .164/.174*	D	2299	601.942,601.970	M			01/96 ▸ 09/03	0065451524	**820207**	95		100		14X1.5	
MITSUBISHI																	
Galant III (87>92)																	
1.6	*E31/ASND/ASNJ*	E	1597	4G32	M			11/87 ▸ 10/92	MB845063	**820301**	80		85		16X1.5	
1.6	*E31ASRH*	E	1597	4G32	A			11/87 ▸ 10/92	MB845063	**820301**	80		85		16X1.5	
1.8	*E32/ALNH/ALNJ/ASNH/ASNJ/ASNU*	E	1755	4G37-7F, 4G37, 4G37-7J	M			11/87 ▸ 10/92	MB845063	**820301**	80		85		16X1.5	
1.8	*E32/ALRH/ASRH*	E	1755	4G37, 4G37-7J, 4G37-7F	A			11/87 ▸ 10/92	MB845063	**820301**	80		85		16X1.5	
2.0,2.0 16V	*E33/ALNG/ALNH/ALNJ/ALNU ASNG/ASNH/ASNJ, E38/ALNH ASNH, E39/ALNG/ALNH/ASNG ASNH*	E	1997	4G63, 4G63-5F, 4G63-5 4G63-3L, 4G63-3P, 4G63-5B	M			11/87 ▸ 10/92	MB845063	**820301**	80		85		16X1.5	
2.0	*E33/ALRH/ALRU/ASRH/ASRU*	E	1997	4G63, 4G63-3L	A			11/87 ▸ 10/92	MB845063	**820301**	80		85		16X1.5	
1.8 TD	*E34/ALNH/ALNJ/ASNH/ASNJ*	D	1795	4D65-1D, 4D65-1T	M			11/87 ▸ 10/92	MB845063	**820301**	80		85		16X1.5	
1.8 TD	*E34/ALRH/ASRH*	D	1795	4D65-1D, 4D65-1T	A			11/87 ▸ 10/92	MB845063	**820301**	80		85		16X1.5	
NISSAN																	
Bluebird (T72) (88>90)																	
1.6	*LT72DFQ, LT72FQ, LT72SFQ, FLT72/DF FQ*	E	1598	CA16S	M			09/88 ▸ 12/90	21595Q9025	•**820832**	88		96		22	
1.8 Turbo,1.8 i 1.8 i Turbo	*FRLT72F, PLT72DF, RLT72FE FPLT7/2D*	E	1809	CA18DE,CA18ET,CA18T	M			09/88 ▸ 12/90	21595Q9025	•**820832**	88		96		22	
2.0,2.0 i	*FHLT7/2A/2D/2F/2X, HLT72 DF/FE/FQ/XF*	E	1973	CA20E,CA20S	M			12/85 ▸ 12/90	21595Q9025	•**820832**	88		96		22	
2.0,2.0 i	*FHLT7/2A/2X, HLT72/AE/AQ XA*	E	1973	CA20E,CA20S	A			09/88 ▸ 12/90	21595Q9025	•**820832**	88		96		22	
2.0 D	*FLT72/DF/FQ, SLT72/DF/FQ*	D	1952	LD20	M			09/88 ▸ 12/90	21595Q9025	•**820832**	88		96		22	
Micra (K10) (82>92)																	
1.0	*LK10F//Q, LK10Q, LK10L/F/FQ/Q/S/SQ LK10S//Q*	E	988	MA10,MA10S	M			+ Cable	11/82 ▸ 11/88	2159501B00	**820239**	83			90	16X1.5	
1.0	*LK10A//Q, LK10L/A/AQ*	E	988	MA10,MA10S	A			+ Cable	11/82 ▸ 11/88	2159503B60	**820239**	83			90	16X1.5	
Micra (K11) (92>2000)																	
1.0 i 16V	*EAEAL/BF/DF/FF, FREAL/BF DF/FF*	E	998	CG10DE	M			08/92 ▸ 08/00	215956F600	**820037**	90	100	95	105	22X1.5	29
1.0 i 16V	*EAEALFZ, FAEALFZ*	E	998	CG10DE	A			08/92 ▸ 06/00	215956F600	**820037**	90	100	95	105	22X1.5	29
1.3 i	*EANAL/DF/FF/TF, FANAL/DF/FF*	E	1275	CG13DE	M			08/92 ▸ 06/00	215956F600	**820037**	90	100	95	105	22X1.5	29
1.3 i	*EANAL/DZ/FZ, FANAL/DZ/FZ*	E	1275	CG13DE	A			08/92 ▸ 06/00	215956F600	**820037**	90	100	95	105	22X1.5	29

• **New** Nouveau **Nuevo** Novo **Nuovo** Nieuw **Neu** Yeni Новый Nou

	Type Ctr.		CC		AC			OE	Valeo	(°)C T1	T2	T3	T4	COD.	mm	
NISSAN (.../...)																
Micra (K11) (92>2000) (.../...)																
1.5 D	ECAK11U, FCAK11U	D	1527	TD15	M			04/98 ▸ 06/00	215956F600	**820037**	90	100	95	105	22X1.5	29
Prairie (M10) (82>88)																
1.5	BLM10/HF/KD/KH/LD	E	1488	E15S	M		+ Cable	09/82 ▸ 02/85	2159501A00	**820240**	85		90		16X1.5	
1.5	BLM10/KD/KH/LD	E	1488	E15S	M		+ Cable	09/82 ▸ 09/88	2159504F04	**820233**	85			95	16X1.5	
1.8	PLM10/HF/TH	E	1809	CA18,CA18S	M		+ Cable	09/82 ▸ 09/88	2159504F04	**820233**	85			95	16X1.5	
1.8	PLM10/HA/TH	E	1809	CA18,CA18S	A		+ Cable	09/82 ▸ 09/88	2159504F04	**820233**	85			95	16X1.5	
2.0 i	HLNM10H	E	1973	CA20E	M		+ Cable	01/86 ▸ 09/87	2159504F04	**820233**	85			95	16X1.5	
Sunny (B11) (82>86)																
1.3	B11/, LB11, LB115K, KLB11//F/FG/FQ G, LB11G, LB11F//G/Q/QG, LB11Q//G LB11R/FG/FQ/Q/QG/S/SQ, TLB11RS TVLB11R, LB11S//K, VLB11//G/Q/QG RS/S/SQ, WL131/1/1F/1G	E	1270	E13S, E13	M		+ Cable	10/81 ▸ 1986	2159501A00	**820240**	85		90		16X1.5	
1.3	LB11A//G	E	1270	E13S, E13	A		+ Cable	10/81 ▸ 1986	2159501A00	**820240**	85		90		16X1.5	
1.5	HB11/, KHB11, KHLB11F, OHB11 OKHB11, OWHB11, WHB11, HLB11//F/FG FK/FQ/G/Q/QG/RF/RQ	E	1488	E15S, E15	M		+ Cable	10/81 ▸ 1986	2159501A00	**820240**	85		90		16X1.5	
1.5	HB11A/, KHLB11A, OHB11A, HLB11/A/AG AK/AQ/HK/RA	E	1488	E15, E15S	A		+ Cable	10/81 ▸ 1986	2159501A00	**820240**	85		90		16X1.5	
1.7 D	SB11/, WSLB11F, SLB11/F/FQ/RF	D	1681	CD17	M		+ Cable	09/82 ▸ 1988	2159501A00	**820240**	85		90		16X1.5	
1.7 D	SLB11/A/AQ/RA	D	1681	CD17	A		+ Cable	09/82 ▸ 1986	2159501A00	**820240**	85		90		16X1.5	
Sunny (86>)																
1.4	FULN1/3D/3H, RULN1/3D/3H/3L, ULN13 DF/HF/LF	E	1392	GA14S	M		+ Cable	10/88 ▸ 10/90	2159563A01	**820233**	85			95	16X1.5	
1.4,1.4 i 16V	EAVALDA, BAVAL/DA/FA VAVALDA, FAVAL/DA/FA	E	1392	GA14DE,GA14DS	A		+ Cable	10/90 ▸ 05/95	2159563A01	**820233**	85			95	16X1.5	
1.6	FGLN1/3D/3H/3W, GLNN13H, GLN13/DF HF/WF, RGLN1/3D/3H	E	1597	GA16S	M		+ Cable	10/88 ▸ 10/90	2159563A01	**820233**	85			95	16X1.5	
1.6,1.6 i	EAYALFA, FAYALFA, BAYAL FA	E	1597	GA16DEE,GA16DS	A		+ Cable	10/90 ▸ 05/95	2159563A01	**820233**	85			95	16X1.5	
1.6,1.6 16V	ELN13WF, RELN13S	E	1598	CA16D	M		+ Cable	02/87 ▸ 10/88	2159563A00	**820233**	85			95	16X1.5	
1.8 i 16V	KULB12J	E	1809	CA18D	M		+ Cable	10/88 ▸ 05/90	2159563A00	**820233**	85			95	16X1.5	
1.7 D	FSLN1/3D/3H, RSLN1/3D/3H, SLN13/DF HF	D	1681	CD17	M		+ Cable	06/86 ▸ 10/90	2159563A00	**820233**	85			95	16X1.5	
1.7 D	SLN13HA	D	1681	CD17	A		+ Cable	06/86 ▸ 10/88	2159563A00	**820233**	85			95	16X1.5	
OPEL																
Ascona B (75>81)																
1.6,1.6 S		E	1584	16S-CVH, 16N	M			08/75 ▸ 07/81	1341002	**819746**	95		100		22X1.5	29
1.6,1.6 S		E	1584	16N, 16S-CVH	A			08/75 ▸ 07/81	1341002	**819746**	95		100		22X1.5	29
1.9		E	1897	19N	M			08/75 ▸ 07/81	1341002	**819746**	95		100		22X1.5	29
2.0		E	1979	20S	M			08/78 ▸ 07/81	1341002	**819746**	95		100		22X1.5	29
2.0 D		D	1998	20D	M			08/78 ▸ 07/81	1341002	**819746**	95		100		22X1.5	29
Ascona C (81>88)																
1300,1300 S	J94/11/68/69, J98/11/68 69, JC9/481/484/486/487 488/489/588/881/884/886 887/889/8A8	E	1297	13N, 13S	M	-		08/81 ▸ 08/88	1341002	**819746**	95		100		22X1.5	29
1300,1300 S	J95/11/68/69, JC9/581/584 586/587/589	E	1297	13N, 13S	A	-		08/81 ▸ 08/88	1341002	**819746**	95		100		22X1.5	29
1600	JC	E	1584	16N	M	-		08/81 ▸ 08/83	1341002	**819746**	95		100		22X1.5	29
1600,1600 S	JC/, JC4/381/384/386/481 484/486/487/488/4A8/4AR 8A8, JCU467, JCC/438/488 JU4/11/68/69/GT1/GT8/GT9 JU8/11/68/69	E	1598	C16NZ, 16SH	M	-		08/81 ▸ 08/88	1341002	**819746**	95		100		22X1.5	29

• **New** Nouveau **Nuevo** Novo **Nuovo** Nieuw **Neu** Yeni Новый Nou

Valeo

Thermoswitch
Thermocontact
Termocontacto
Termocontato
Termocontatto
Thermokontakt
Thermoschalter

Włącznik wentylatora
Tepelný spínač
Termokapcsoló
Termocontact
Fan müşiri
ТЕРМОДАТЧИК

		Type Ctr.		cc			AC			OE	Valeo	(°)C T1	T2	T3	T4	COD.	mm	
OPEL (.../...)																			
Ascona C (81>88) (.../...)																			
1600,1600 S	*JCC458, JCU567, JC4/581 584/586/587/588/589/5R8 JU5/11/68/69/GT1/GT8/GT9*	E	1598	16SH	A	-		08/81 ▸ 08/88	1341002	**819746**	95		100		22X1.5	29	
1800 E,1800 i	*JCCW38, JC/, JCW/3/381 384/386/4A8/4AC/4C8*	E	1796	E18NV, 18E, C18NE, S18NV	M	-		08/82 ▸ 08/88	1341002	**819746**	95		100		22X1.5	29	
1800 E,1800 i	*JCW/581/587/588/589/5C8 5R8*	E	1796	18E	A	-		08/81 ▸ 08/86	1341002	**819746**	95		100		22X1.5	29	
2000 i	*JB3/GT1/GT8/GT9, JCB367 JCK367, JB4/68/69, JK3 GT1/GT8/GT9*	E	1998	20NE, 20SEH	M	-		08/85 ▸ 08/88	1341002	**819746**	95		100		22X1.5	29	
2000 i	*JCB567, JB5/68/69/GT1/GT8 GT9*	E	1998	20SEH, 20NE	A	-		08/85 ▸ 08/88	1341002	**819746**	95		100		22X1.5	29	
1600 D	*JCT/484/486/489/4A8/881 884/886/887/889, JT4/11 68/69, JT8/11/68/69*	D	1598	1600D	M	-		08/81 ▸ 08/88	1341002	**819746**	95		100		22X1.5	29	
1600 D	*JCT/581/584/586/587/588 589, JT5/11/68/69*	D	1598	1600D	A	-		08/81 ▸ 08/88	1341002	**819746**	95		100		22X1.5	29	
Astra F (91>98)																			
1.4 i,1.4 i 16V	*TA1/308/319/368, TA4/306 308/319/368/408/419/435 468, TAC/408/419/468, TAK 136/436*	E	1389	C14NZ, 14SE, C14SE, X14XE X14NZ	M	+		09/91 ▸ 02/01	1341011	**819830**	95		100		22X1.5	29	
1.4 i,1.4 i 16V	*TA1/308/319/368, TA4/306 308/319/368/408/419/435 468, TAC/408/419/468, TAK 136/436*	E	1389	X14XE, C14SE, X14NZ, 14SE C14NZ	M	+		09/91 ▸ 02/01	1846325	**820311**	100	115	105	120	22X1.5	29	
1.4,1.4 i,1.4 i 16V	*TA1/308/319/368, TA3/240 246, TA4/306/308/319/368 408/419/435/468, TAC/408 419/468, TAK/136/436*	E	1389	14NV,14SE,C14NZ,C14SE,X14NZ X14XE	M	-		09/91 ▸ 02/01	1341030	•**820828**	95		100		22X1.5		
1.4 i,1.4 i 16V	*TA6/308/319/369*	E	1389	14SE,C14SE,X14XE	A	-		09/91 ▸ 02/01	1341030	•**820828**	95		100		22X1.5		
1.4 i,1.4 i 16V	*TA1/308/319/368, TA4/306 308/319/368/408/419/435 468, TAC/408/419/468, TAK 136/436*	E	1389	X14NZ, X14XE, C14SE, C14NZ 14SE	M	+		09/91 ▸ 02/01	1341028	**820242**	82		87		22X1.5	29	
1.4 i,1.4 i 16V	*TA6/308/319/368*	E	1389	C14SE, 14SE, X14XE	A	+		03/91 ▸ 02/01	1341028	**820242**	82		87		22X1.5	29	
1.4 i,1.4 i 16V	*TA6/308/319/368*	E	1389	C14SE, X14XE, 14SE	A	+		03/91 ▸ 02/01	1341011	**819830**	95		100		22X1.5	29	
1.4 i,1.4 i 16V	*TA6/308/319/368*	E	1389	14SE, C14SE, X14XE	A	+		09/91 ▸ 02/01	1846325	**820311**	100	115	105	120	22X1.5	29	
1.6 i,1.6 i 16V	*TAM/301/306/308/319/368 TAN/408/419/468*	E	1598	X16SZR, C16NZ, C16SE, X16XEL X16SZ, 16LZ2	M	+/-		09/91 ▸ 01/98	1341028	**820242**	82		87		22X1.5	29	
1.6 i,1.6 i 16V	*TAM/301/306/308/319/368 TAN/408/419/468*	E	1598	X16SZ, C16SE, C16NZ, X16SZR X16XEL, 16LZ2	M	+		09/91 ▸ 02/01	1341011	**819830**	95		100		22X1.5	29	
1.6 i,1.6 i 16V	*TAM/301/306/308/319/368 TAN/408/419/468*	E	1598	X16XEL, C16NZ, C16SE, X16SZ X16SZR, 16LZ2	M	+		09/91 ▸ 02/01	1846325	**820311**	100	115	105	120	22X1.5	29	
1.6 i,1.6 i 16V	*TAM/608/619/668, TAN/608 619/668*	E	1598	C16NZ, X16SZR, X16XEL, C16SE X16SZ	A	+		09/91 ▸ 02/01	1341011	**819830**	95		100		22X1.5	29	
1.6 i,1.6 i 16V	*TAM/608/619/668, TAN/608 619/668*	E	1598	C16SE, C16NZ, X16XEL, X16SZ X16SZR	A	+		09/91 ▸ 02/01	1341028	**820242**	82		87		22X1.5	29	
1.6 i,1.6 i 16V	*TAM/608/619/668, TAN/608 619/668*	E	1598	C16SE, X16SZR, X16XEL, X16SZ C16NZ	A	+		09/91 ▸ 02/01	1846325	**820311**	100	115	105	120	22X1.5	29	
1.6 i,1.6 i 16V	*TAM/301/306/308/319/368 TAN/408/419/468*	E	1598	16LZ2,C16NZ,C16SE,X16SZ X16SZR,X16XEL	M	-		09/91 ▸ 02/01	1341030	•**820828**	95		100		22X1.5		
1.6 i,1.6 i 16V	*TAM/608/619/668, TAN/608 619/668*	E	1598	C16SE,X16XEL	A	-		09/91 ▸ 02/01	1341030	•**820828**	95		100		22X1.5		
1.6 i		E	1598	C16NZ,X16SZ,X16SZR	A			09/91 ▸ 02/01	1341030	•**820828**	95		100		22X1.5		
1.8 i		E	1796	C18NZ	M	+		09/91 ▸ 01/98	1341011	**819830**	95		100		22X1.5	29	
1.8 i		E	1796	C18NZ	M	+		09/91 ▸ 08/94	1846325	**820311**	100	115	105	120	22X1.5	29	
1.8 i		E	1796	C18NZ	M	+		09/91 ▸ 01/98	1341028	**820242**	82		87		22X1.5	29	
1.8 i		E	1796	C18NZ	A	+		09/91 ▸ 01/98	1341028	**820242**	82		87		22X1.5	29	
1.8 i		E	1796	C18NZ	A	+		09/91 ▸ 08/94	1846325	**820311**	100	115	105	120	22X1.5	29	
1.8 i		E	1796	C18NZ	A	+		09/91 ▸ 01/98	1341011	**819830**	95		100		22X1.5	29	
1.8 i		E	1796	C18NZ	M	-		09/91 ▸ 08/94	1341030	•**820828**	95		100		22X1.5		
1.8 i		E	1796	C18NZ	M	-		09/91 ▸ 08/94	1341025	**820036**	95	105	100	110	22x1.5	29	

• **New** Nouveau **Nuevo** Novo **Nuovo** Nieuw **Neu** Yeni Новый Nou

														T1	T2	T3	T4	mm
OPEL (.../...)																		
Astra F (91>98) (.../...)																		
1.8 i		E	1796	C18NZ	A	-		09/91 ▸ 08/94	1341025	**820036**	95	105	100	110	22x1.5	29
1.8 i 16V		E	1799	C18XE, X18XE, C18XEL	M	+/-		07/93 ▸ 02/01	1341026	**820037**	90	100	95	105	22X1.5	29
1.8 i 16V	*TAKU46*	E	1799	C18XE, X18XE, C18XEL	M	+		07/93 ▸ 02/01	1846325	**820311**	100	115	105	120	22X1.5	29
1.8 i 16V	*TAKU46*	E	1799	C18XE, X18XE, C18XEL	M	+		07/93 ▸ 02/01	1341011	**819830**	95		100		22X1.5	29
1.8 i 16V	*TAKU46*	E	1799	C18XEL, C18XE, X18XE	M	+		07/93 ▸ 02/01	1341028	**820242**	82		87		22X1.5	29
1.8 i 16V		E	1799	X18XE	A	+		08/94 ▸ 02/01	1341011	**819830**	95		100		22X1.5	29
1.8 i 16V		E	1799	X18XE	A	+		08/94 ▸ 02/01	1341028	**820242**	82		87		22X1.5	29
1.8 i 16V		E	1799	X18XE	A	+		08/94 ▸ 02/01	1846325	**820311**	100	115	105	120	22X1.5	29
1.8 i 16V		E	1799	X18XE	A	-		08/94 ▸ 02/01	1341026	**820037**	90	100	95	105	22X1.5	29
2.0 i,2.0 i 16V	*TAD/3G0, TAKD46, TAJ/3G0 3G1/3G6, TAW/300/401/406*	E	1998	C20NE, C20XE, X20XEV	M	+ -		09/91 ▸ 01/98	1341028	**820242**	82		87		22X1.5	29
2.0 i,2.0 i 16V	*TAD/3G0, TAKD46, TAJ/3G0 3G1/3G6, TAW/300/401/406*	E	1998	C20XE, X20XEV, C20NE	M	+		09/91 ▸ 02/01	1846325	**820311**	100	115	105	120	22X1.5	29
2.0 i,2.0 i 16V	*TAD/3G0, TAKD46, TAJ/3G0 3G1/3G6, TAW/300/401/406*	E	1998	C20NE, C20XE, X20XEV	M	+		09/91 ▸ 02/01	1341011	**819830**	95		100		22X1.5	29
2.0 i 16V	*TAW/300/401/406*	E	1998	X20XEV	M	-		07/94 ▸ 01/98	1341026	**820037**	90	100	95	105	22X1.5	29
2.0 i,2.0 i 16V	*TAW/600/601/606*	E	1998	C20NE, X20XEV	A	+		09/91 ▸ 02/01	1341011	**819830**	95		100		22X1.5	29
2.0 i,2.0 i 16V	*TAW/600/601/606*	E	1998	X20XEV, C20NE	A	+		09/91 ▸ 02/01	1341028	**820242**	82		87		22X1.5	29
2.0 i,2.0 i 16V	*TAW/600/601/606*	E	1998	C20NE, X20XEV	A	+		09/91 ▸ 02/01	1846325	**820311**	100	115	105	120	22X1.5	29
2.0 i 16V	*TAW/600/601/606*	E	1998	X20XEV	A	-		01/95 ▸ 01/98	1341026	**820037**	90	100	95	105	22X1.5	29
2.0 i,2.0 i 16V	*TAD/3G0, TAKD46, TAJ/3G0 3G1/3G6*	E	1998	C20NE,C20XE	M	-		09/91 ▸ 02/01	1341025	**820036**	95	105	100	110	22x1.5	29
1.7 TD Turbo	*TA9/419/468/4E0/4E1/4E6*	D	1686	17TD	M	+/-		09/91 ▸ 01/98	1341026	**820037**	90	100	95	105	22X1.5	29
1.7 D	*TAF/408/419/435/468*	D	1699	17DR, 17D	M	+/-		09/91 ▸ 01/98	1341033	**820308**	82	90	87	95	22X1.5	29
1.7 TD,1.7 TD Ecoturbo	*TAA/408/419/468*	D	1699	X17DTL	M	+/-		07/94 ▸ 01/98	1341026	**820037**	90	100	95	105	22X1.5	29
1.7 D		D	1699	17D,17DR	M	+/-		09/91 ▸ 01/98	1341025	**820036**	95	105	100	110	22x1.5	29
1.7 D	*TA8/419, TAF/408/419/435/468*	D	1699	17D,17DR	M			09/91 ▸ 01/98	1341025	**820036**	95	105	100	110	22x1.5	29
Astra G (98>2002)																		
1.6 i 16V		E	1598	X16XEL	M	-		09/98 ▸ 12/02	1341030	●**820828**	95		100		22X1.5	
Calibra																		
2.0 i,2.0 i 16V	*JM0/71A/71C/7DA/7DC*	E	1998	C20NE, C20XE	M	+/-		09/89 ▸	1341011	**819830**	95		100		22X1.5	29
2.0 i 16V,2.0 i Turbo 16S	*JM0/7*/72L/7IC*	E	1998	X20XEV, C20LET	M	+/-		09/91 ▸	1341039	**820037**	90	100	95	105	22X1.5	29
2.0 i,2.0 i 16V 2.0 i Turbo 16S	*JM0/7*/71A/71C/72L/7DA 7DC/7IC*	E	1998	C20XE, X20XEV, C20NE, C20LET	M	+		09/89 ▸	1341028	**820242**	82		87		22X1.5	29
2.0 i,2.0 i 16V 2.0 i Turbo 16S	*JM0/71A/71C/72L/7DA/7DC*	E	1998	C20XE, C20NE, C20LET	M	-		09/89 ▸	1341023	**820038**	95		100		22X1.5	29
2.0 i	*JM0/7DA/7DC*	E	1998	C20NE	M	-		09/89 ▸	1341033	**820308**	82	90	87	95	22X1.5	29
2.0 i	*JM07DB*	E	1998	C20NE	A	+/-		09/89 ▸	1341011	**819830**	95		100		22X1.5	29
2.0 i,2.0 i 16V	*JM0/7*/7DB*	E	1998	X20XEV, C20NE	A	+		09/89 ▸	1341028	**820242**	82		87		22X1.5	29
2.0 i	*JM07DB*	E	1998	C20NE	A	-		09/89 ▸	1341033	**820308**	82	90	87	95	22X1.5	29
2.0 i	*JM07DB*	E	1998	C20NE	A	-		09/89 ▸	1341023	**820038**	95		100		22X1.5	29
2.0 i 16V	*JM07**	E	1998	X20XEV	A	-		06/94 ▸	1341039	**820037**	90	100	95	105	22X1.5	29
2.5 i V6 24V		E	2498	C25XE,X25XE	M	-		05/93 ▸ 07/97	1341027	**820036**	95	105	100	110	22x1.5	29
2.5 i V6 24V		E	2498	C25XE,X25XE	A	-		05/93 ▸ 07/97	1341027	**820036**	95	105	100	110	22x1.5	29
Corsa A (82>93)																		
1.0 ▸ K4000001	*S24/08, S28/08/68*	E	993	10S	M			01/89 ▸ 1993	1341011	**819830**	95		100		22X1.5	29
1.0 ▸ J499999	*S24/08, S28/08/68, SC2/491/492/493 494/4B9/891/892/893/894/8B9, SC4 249/24B/289/28B, SC5/249/289*	E	993	10S	M			10/82 ▸ 1988	1341002	**819746**	95		100		22X1.5	29
1.2 i	*S7408*	E	1195	C12NZ	M			07/91 ▸ 1993	1341011	**819830**	95		100		22X1.5	29
1.2	*S64/08/19/68, S68/08/68, SC4/649 64B/689/68B, SC5/649/689, SM808 SC6/491/492/493/494/4B9/893/8A9 8AB*	E	1196	12ST	M			10/82 ▸ 06/88	1341002	**819746**	95		100		22X1.5	29
1.2	*S64/08/19/68/NV0/NV1/NV6, SM808 S68/08/68*	E	1196	12NV, 12ST	M			07/88 ▸ 1993	1341011	**819830**	95		100		22X1.5	29
1.3	*SA4/08/19/68/GT8, SC5A49, SC4/A49 A4B, SCA/491/492/493/494/4B9/4R9*	E	1297	13SB	M			10/82 ▸ 06/88	1341002	**819746**	95		100		22X1.5	29
1.3	*SA4/08/19/68/GT8*	E	1297	13SB	M			07/88 ▸ 1990	1341011	**819830**	95		100		22X1.5	29

• **New** Nouveau **Nuevo** Novo **Nuovo** Nieuw **Neu** Yeni Новый Nou

OPEL (.../...)

Corsa A (82>93) (.../...)

1.4,1.4 i	*S4308, S34/08/11/19/68 GT8/SP0, SC4/08/19/68*	E	1389	14NV, C14NZ	M			09/89 ▸ 1993	1341011	**819830**	95		100		22X1.5	29
1.6 i	*S, SP308*	E	1598	C16NZ, E16SE	M			07/88 ▸ 03/93	1341011	**819830**	95		100		22X1.5	29
1.6 i ▸ J4999999	*SP308*	E	1598	E16SE	M			03/88 ▸	1341002	**819746**	95		100		22X1.5	29
1.5 TD	*SG4/08/19/68*	D	1488	T4EC1	M			03/88 ▸ 06/88	1341002	**819746**	95		100		22X1.5	29
1.5 TD	*SB4/08/19/68, SG4/08/19 68*	D	1488	T4EC1	M			07/88 ▸ 1993	1341011	**819830**	95		100		22X1.5	29
1.5 D,1.5 TD K4000001 ▸ K4999999	*SF4/08/19/68, SG4/08/19 68*	D	1488	T4EC1, 4EC1	M			01/89 ▸ 12/89	1341020	**820324**	95	105	100	110	2	
1.5 D,1.5 TD L4000001 ▸	*SB4/08/19/68, SF4/08/19 68, SG4/08/19/68*	D	1488	4EC1,T4EC1	M			01/90 ▸ 1993	1341025	**820036**	95	105	100	110	22x1.5	29

Corsa B (93>2000)

1.0 i 12V	*S93/CN1/DN1*	E	973	X10XE	M			03/97 ▸ 08/00	1341011	**819830**	95		100		22X1.5	29
1.0 i 12V	*S93/CN1/DN1*	E	973	X10XE	M	+	+ Cable	03/97 ▸ 1998	1846201	**820227**	115	100	120	105	22x1.5	29
1.2,1.2 i	*S93/CB1/DB1*	E	1195	X12SZ, C12NZ, 12NZ	M			03/93 ▸ 08/00	1341011	**819830**	95		100		22X1.5	29
1.2 i 16V		E	1199	X12XE	M			03/98 ▸ 08/00	1341011	**819830**	95		100		22X1.5	29
1.4 i,1.4 i 16V	*S93/CJ1/CM1/DJ1/DM1*	E	1389	C14SE, C14NZ, X14SZ, X14XE	M			03/93 ▸ 08/00	1341011	**819830**	95		100		22X1.5	29
1.4 i,1.4 i 16V	*S93/CJ1/CM1/DJ1/DM1*	E	1389	C14NZ, X14XE, X14SZ	A			09/93 ▸ 08/00	1341011	**819830**	95		100		22X1.5	29
1.4 i,1.4 i 16V	*S93/CJ1/CM1/DJ1/DM1*	E	1389	C14NZ,C14SE,X14SZ,X14XE	M	+	+ Cable	03/93 ▸ 08/00	1846201	**820227**	115	100	120	105	22x1.5	29
1.4 i,1.4 i 16V	*S93/CJ1/CM1/DJ1/DM1*	E	1389	C14NZ,X14SZ,X14XE	A	+	+ Cable	09/93 ▸ 08/00	1846201	**820227**	115	100	120	105	22x1.5	29
1.6 i 16V		E	1598	C16XE	M			03/93 ▸ 08/00	1341011	**819830**	95		100		22X1.5	29
1.6 i,1.6 i 16V		E	1598	C16SEL,C16XE,X16XE	M	+	+ Cable	03/93 ▸ 08/00	1846201	**820227**	115	100	120	105	22x1.5	29
1.5 D,1.5 TD		D	1488	15D,15TD	M			03/93 ▸ 08/00	1341030	•**820828**	95		100		22X1.5	
1.5 D,1.5 TD		D	1488	15D,15TD	M			03/93 ▸ 08/00	1341025	**820036**	95	105	100	110	22x1.5	29
1.7 D	*S93/CL1/DL1*	D	1686	X17D	M			03/93 ▸ 08/00	1341030	•**820828**	95		100		22X1.5	

Frontera (91>98)

2.0 i	*55SUD2*	E	1998	X20SE	M			04/95 ▸ 09/98	1341044	**820037**	90	100	95	105	22X1.5	29
2.2 i 16V	*54MWL4*	E	2198	X22XE	M			04/95 ▸ 09/98	1341044	**820037**	90	100	95	105	22X1.5	29

Kadett D (79>84)

1.0		E	993	10N	M			08/79 ▸ 07/82	1341002	**819746**	95		100		22X1.5	29
1.0		E	993	10S	M			08/79 ▸ 07/82	1341003	**819760**	86		95		22X1.5	29
1.2	*T82/50/80, T83/50/58/58A/80, T84/50 543/544/58/584/58A/80/88*	E	1196	12S, 12N	M			08/79 ▸ 07/84	1341002	**819746**	95		100		22X1.5	29
1.3	*T33/274/278, T34/274/278, T46/274 278/294/298, T84/90A/943/94R*	E	1297	13S, 13N	M			08/79 ▸ 08/84	1341002	**819746**	95		100		22X1.5	29
1.3	*T34278, T33/278, T46/278/298, T84 90/94*	E	1297	13N, 13S	A			08/79 ▸ 08/84	1341002	**819746**	95		100		22X1.5	29
1.6	*T84/4/44A/4AR*	E	1598	16SH	M			09/81 ▸ 08/84	1341002	**819746**	95		100		22X1.5	29
1.6	*T844*	E	1598	16SH	A			09/81 ▸ 08/84	1341002	**819746**	95		100		22X1.5	29
1.8 i	*T82/W33/W43*	E	1796	18E	M			05/83 ▸ 08/84	1341002	**819746**	95		100		22X1.5	29
1.8 i	*T82W*	E	1796	18E	A			05/83 ▸ 08/84	1341002	**819746**	95		100		22X1.5	29
1.6 D	*T83/T43/T44/T83/T84, T84/T43/T44 T83/T84*	D	1598	D16	M			04/82 ▸ 08/84	1341002	**819746**	95		100		22X1.5	29
1.6 D	*T442T8, T462T8, T43/2T8*	D	1598	D16	A			04/82 ▸ 08/84	1341002	**819746**	95		100		22X1.5	29

Kadett E (84>91)

1.2 S J5273428 ▸	*T54/08/19/35/48, T58/08/19/35/48*	E	1196	12S	M			1988 ▸	1341021	**820212**	92		97		22X1.5	29
1.2 S J5273428 ▸	*T54/08/19/35/48, T58/08/19/35/48*	E	1196	12S	M			09/84 ▸	1341011	**819830**	95		100		22X1.5	29
1.2 S J2791968 ▸	*T54/08/19/35/48, T58/08/19/35/48*	E	1196	12S	M		+ Cable	09/84 ▸	1341018	**819829**	95		100		22X1.5	29
1.2 S ▸ J2791967	*E83/543/544/583/584/58B, E84/543 544/54B/583/584/58B, T54/08/19/35 48, T58/08/19/35/48*	E	1196	12S, 12ST	M			08/84 ▸	1341003	**819760**	86		95		22X1.5	29
1.2 S ▸ J5273427	*E83/543/544/583/584/58B, E84/543 544/54B/583/584/58B, T54/08/19/35 48, T58/08/19/35/48*	E	1196	12S, 12ST	M			08/84 ▸ 1988	1341002	**819746**	95		100		22X1.5	29
1.3,1.3 N,1.3 S	*T94/08/19/35/48, TN448 T98/08/19/35/48*	E	1297	13S, 13N, C13N	M		+ Cable	09/84 ▸	1341018	**819829**	95		100		22X1.5	29

• **New** Nouveau **Nuevo** Novo **Nuovo** Nieuw **Neu** Yeni Новый Nou

			Type Ctr.		CC			AC		2 3	OE	Valeo	(°)C T1	T2	T3	T4	COD.	mm	
OPEL (.../...)																			
Kadett E (84>91) (.../...)																			
1.3,1.3 S	*T94/08/19/35/48/GT, T98*	E	1297	13S, C13N	M				02/87 ▸		1341011	**819830**	95		100		22X1.5	29
J5273428 ▸	*08/19/35/48*																		
1.3 S	*T95/08/19/35/48*	E	1297	13S	A			+ Cable	09/86 ▸		1341018	**819829**	95		100		22X1.5	29
1.3 S	*T95/08/19/35/48*	E	1297	13S	A				02/87 ▸		1341011	**819830**	95		100		22X1.5	29
J5273428 ▸																			
1.3,1.3 S	*E83/943/944/94B/983/984*	E	1297	13S, C13N	M				08/84 ▸ 1988		1341002	**819746**	95		100		22X1.5	29
▸ J5273427	*98B, E84/943/944/94B/94R*																		
	983/984/98B, T94/08/19/35																		
	48/GT, T98/08/19/35/48																		
1.3 S	*E83/953/954/95B, E84/953/954/95B*	E	1297	13S	A				08/84 ▸ 1988		1341002	**819746**	95		100		22X1.5	29
▸ J5273427	*T95/08/19/35/48*																		
1.4 S	*T3435*	E	1389	14NV	M			+ Cable	09/89 ▸		1341018	**819829**	95		100		22X1.5	29
1.4 S,1.4 i	*T34/08/19/35/48/67, TC4*	E	1389	14NV, C14NZ	M				09/89 ▸		1341011	**819830**	95		100		22X1.5	29
	19/48																		
1.6 S,1.6 i	*TR4/67, TU4/08/19/35/48*	E	1598	C16LZ, 16SV, E16NZ	M			+ Cable	09/86 ▸		1341018	**819829**	95		100		22X1.5	29
	67/GT, TU8/08/19/35/48																		
1.6 S,1.6 i	*TR4/67, TU4/08/19/35/48*	E	1598	16SV, E16NZ, C16LZ	M				02/87 ▸		1341011	**819830**	95		100		22X1.5	29
J5273428 ▸	*67/GT, TU8/08/19/35/48*																		
1.6,1.6 S,1.6 i	*TU319, E84/45B, TU5/08/19*	E	1598	C16NZ, 16SV, 16S-OHC	A			+ Cable	09/86 ▸		1341018	**819829**	95		100		22X1.5	29
	35/48/GT																		
1.6,1.6 S,1.6 i	*TU319, E84/45B, TU5/08/19*	E	1598	16SV, C16NZ, 16S-OHC	A				02/87 ▸		1341011	**819830**	95		100		22X1.5	29
J2791968 ▸	*35/48/GT*																		
1.6 S,1.6 i	*E83/443/444/44B/483/484*	E	1598	16S-OHC, 16SV, C16LZ, E16NZ	M				08/84 ▸ 1988		1341002	**819746**	95		100		22X1.5	29
▸ J2791967	*48B, TR467, E84/433/443*																		
	444/44B/483/484/48B/4CR																		
	TU4/08/19/35/48/67/GT																		
	TU8/08/19/35/48																		
1.6 S,1.6 i	*E83/453/454/45B/954, E84*	E	1598	C16NZ, 16SV, 16S-OHC	A				08/84 ▸ 1988		1341002	**819746**	95		100		22X1.5	29
▸ J5273427	*453/454/45B, TU5/08/19/35*																		
	48/GT																		
1.8,1.8 i	*TW3/08/19/48/T08/T19/T35*	E	1796	18SE, S18NV	M				09/86 ▸		1341011	**819830**	95		100		22X1.5	29
J5273428 ▸	*T48*																		
1.8 i	*TW3T35*	E	1796	18SE	M			+ Cable	09/87 ▸		1341018	**819829**	95		100		22X1.5	29
1.8 i		E	1796	C18NE	A			+ Cable	02/87 ▸		1341018	**819829**	95		100		22X1.5	29
1.8 i		E	1796	C18NE	A				02/87 ▸		1341011	**819830**	95		100		22X1.5	29
1.8 i		E	1796	C18NE	A				09/86 ▸ 1988		1341002	**819746**	95		100		22X1.5	29
▸ J2791967																			
1.8 E,1.8 i	*E82W34, TW3T35*	E	1796	18E, 18SE	M				08/84 ▸ 1988		1341002	**819746**	95		100		22X1.5	29
▸ J5273427																			
2.0 i,2.0 i 16V	*TB3/67, TH3/08/48, TK3/08*	E	1998	C20NE, 20XE, 20SEH, C20XE	M			+ Cable	09/86 ▸		1341018	**819829**	95		100		22X1.5	29
JE222259 ▸	*48*																		
1.5 D	*TG4/08/19/35/48*	D	1488	TC4EC1	M				07/89 ▸		1341026	**820037**	90	100	95	105	22X1.5	29
1.6 D	*E83/T43/T44/T83/T84/TT4, E84/T43*	D	1598	16D	M				08/84 ▸ 01/87		1341002	**819746**	95		100		22X1.5	29
	T44/T4B/T83/T84/T8B, TT4/08/19/35																		
	48, TT8/08/19/35/48																		
1.6 D	*TT4/08/19/35/48, TT8/08/19/35/48*	D	1598	16D	M			+ Cable	02/87 ▸ 1989		1341018	**819829**	95		100		22X1.5	29
1.6 D	*E83/T53/T54, E84/T53/T54/T5B, TT5*	D	1598	16D	A				08/84 ▸ 01/87		1341002	**819746**	95		100		22X1.5	29
	08/19/35/48																		
1.6 D	*TT5/08/19/35/48*	D	1598	16D	A			+ Cable	02/87 ▸ 1989		1341018	**819829**	95		100		22X1.5	29
1.7 D	*TF4/08/19/35*	D	1699	17DV	M			+ Cable	01/89 ▸		1341018	**819829**	95		100		22X1.5	29
Manta B (75>88)																			
1600 N,1600 S		E	1584	16N, 16S-CVH	M				08/75 ▸ 07/81		1341002	**819746**	95		100		22X1.5	29
1900 N,1900 S		E	1897	19S, 19N	M				08/75 ▸ 07/81		1341002	**819746**	95		100		22X1.5	29
2.0 S	*MB553*	E	1979	20S	A				12/77 ▸ 07/84		1341002	**819746**	95		100		22X1.5	29
2.0 S	*MB453, MB853*	E	1979	20S	M				12/77 ▸ 07/84		1341002	**819746**	95		100		22X1.5	29
Monza																			
2.0 i	*AVC422*	E	1979	20E	M				12/82 ▸ 07/84		1341002	**819746**	95		100		22X1.5	29
2.2 i	*AVH/602/622*	E	2197	22E	A				08/84 ▸ 08/86		1341002	**819746**	95		100		22X1.5	29
2.2 i	*AVH/402/422*	E	2197	22E	M				08/84 ▸ 08/86		1341002	**819746**	95		100		22X1.5	29
2.5 i	*AVJ622*	E	2490	25E	A				06/81 ▸ 08/86		1341002	**819746**	95		100		22X1.5	29
2.5 i	*AVJ/402/422*	E	2490	25E	M				06/81 ▸ 08/86		1341002	**819746**	95		100		22X1.5	29
3.0 i		E	2968	C30NE	M				08/85 ▸ 08/86		1341002	**819746**	95		100		22X1.5	29

• **New** Nouveau **Nuevo** Novo **Nuovo** Nieuw **Neu** Yeni Новый Nou

			Type Ctr.		cc		AC			OE	Valeo	(°)C T1	T2	T3	T4	COD.	mm	
OPEL (.../...)																			
Monza (.../...)																			
3.0	*AVN622*	E		2968	30E	A			06/81 ▸ 08/86	1341002	**819746**	95		100		22X1.5	29	
3.0	*AVN/402/422*	E		2968	30E	M			06/81 ▸ 08/86	1341002	**819746**	95		100		22X1.5	29	
Omega A (86>94)																			
2.3 D,2.3 TD	*VFO419, VF4/19/35, VG0*	D		2260	23DTR, 23YD	M			10/86 ▸ 02/94	1341017	**819830**	95		100		22X1.5	29	
K1000099 ▸	*419/435, VG4/19/35*																		
2.3 D,2.3 TD	*VFO619, VF6/19/35, VG619*	D		2260	23YD, 23DTR	A			10/86 ▸ 02/94	1341017	**819830**	95		100		22X1.5	29	
K1000099 ▸	*VG0/619/635*																		
2.3 D,2.3 TD	*VE4/19/35, VEO/419/435*	D		2260	23YDT, 23DTR, 23YD	M			10/86 ▸	1341002	**819746**	95		100		22X1.5	29	
▸ K1000098	*VFO419, VF4/19/35, VG0*																		
	419/435, VG4/19/35																		
2.3 D,2.3 TD	*VEO619, VE6/19/35, VFO619*	D		2260	23YDT, 23DTR, 23YD	A			10/86 ▸	1341002	**819746**	95		100		22X1.5	29	
▸ K1000098	*VF6/19/35, VG619, VG0*																		
	619/635																		
Omega B (94>)																			
2.0 i,2.0 i 16V	*M35, VBP406, F35/, VBW*	E		1998	X20SE, X20XEV, 20SE	M	+		02/94 ▸	1341011	**819830**	95		100		22X1.5	29	
	406/469																		
2.0 i,2.0 i 16V	*M35, VBP406, F35/, VBW*	E		1998	X20SE, X20XEV, 20SE	M	+		02/94 ▸	1846325	**820311**	100	115	105	120	22X1.5	29	
	406/469																		
2.0 i,2.0 i 16V	*M35, VBP406, F35/, VBW*	E		1998	X20XEV, X20SE, 20SE	M	-		02/94 ▸	1341026	**820037**	90	100	95	105	22X1.5	29	
	406/469																		
2.0 i,2.0 i 16V	*VBP606, M35/, VBW/606/669*	E		1998	X20XEV, X20SE, 20SE	A	+		02/94 ▸	1341011	**819830**	95		100		22X1.5	29	
2.0 i,2.0 i 16V	*VBP606, M35/, VBW/606/669*	E		1998	X20XEV, 20SE, X20SE	A	+		02/94 ▸	1846325	**820311**	100	115	105	120	22X1.5	29	
2.0 i,2.0 i 16V	*VBP606, M35/, VBW/606/669*	E		1998	X20XEV, X20SE, 20SE	A	-		02/94 ▸	1341026	**820037**	90	100	95	105	22X1.5	29	
2.5 i V6 24V	*M35, VBY406*	E		2498	X25XE-170	M	+/-		02/94 ▸	1341036	**820309**	95	105	100	110	22X1.5	29	
2.5 i V6 24V	*M35, VBY406*	E		2498	X25XE-170	M	+		1996 ▸	1846325	**820311**	100	115	105	120	22X1.5	29	
T1003098 ▸																			
2.5 i V6 24V	*M35, VBY406*	E		2498	X25XE-170	M	-		1996 ▸	1341026	**820037**	90	100	95	105	22X1.5	29	
T1056693 ▸																			
2.5 i V6 24V	*M35, VBY606*	E		2498	X25XE-170	A	+/-		02/94 ▸	1341036	**820309**	95	105	100	110	22X1.5	29	
2.5 i V6 24V	*M35, VBY606*	E		2498	X25XE-170	A	+		1996 ▸	1846325	**820311**	100	115	105	120	22X1.5	29	
T1003098 ▸																			
2.5 i V6 24V	*M35, VBY606*	E		2498	X25XE-170	A	-		1996 ▸	1341026	**820037**	90	100	95	105	22X1.5	29	
T1056693 ▸																			
2.5 i V6 24V	*M35, VBY406*	E		2498	X25XE-170	M	-		02/94 ▸	1341017	**819830**	95		100		22X1.5	29	
▸ T1003097																			
2.5 i V6 24V	*M35, VBY606*	E		2498	X25XE-170	A	-		02/94 ▸	1341017	**819830**	95		100		22X1.5	29	
▸ T1003097																			
2.6 i V6 24V		E		2597	Y26SE	M	+		09/00 ▸	1846325	**820311**	100	115	105	120	22X1.5	29	
2.6 i V6 24V		E		2597	Y26SE	M	+		09/00 ▸	1341036	**820309**	95	105	100	110	22X1.5	29	
2.6 i V6 24V		E		2597	Y26SE	A	+		09/00 ▸	1341036	**820309**	95	105	100	110	22X1.5	29	
2.6 i V6 24V		E		2597	Y26SE	A	+		09/00 ▸	1846325	**820311**	100	115	105	120	22X1.5	29	
3.0 i V6 24V	*M35, VBZ406*	E		2962	X30XE	M	+/-		02/94 ▸	1341036	**820309**	95	105	100	110	22X1.5	29	
3.0 i V6 24V	*M35, VBZ406*	E		2962	X30XE	M	+		1996 ▸	1846325	**820311**	100	115	105	120	22X1.5	29	
T1003098 ▸																			
3.0 i V6 24V	*M35, VBZ406*	E		2962	X30XE	M	-		1996 ▸	1341026	**820037**	90	100	95	105	22X1.5	29	
T1056693 ▸																			
3.0 i V6 24V	*M35/, VBZ/606/6E0*	E		2962	X30XE	A	+/-		02/94 ▸	1341036	**820309**	95	105	100	110	22X1.5	29	
3.0 i V6 24V	*M35/, VBZ/606/6E0*	E		2962	X30XE	A	+		1996 ▸	1846325	**820311**	100	115	105	120	22X1.5	29	
T1003098 ▸																			
3.0 i V6 24V	*M35/, VBZ/606/6E0*	E		2962	X30XE	A	-		1996 ▸	1341026	**820037**	90	100	95	105	22X1.5	29	
T1003098 ▸																			
3.0 i V6 24V	*M35/, VBZ/606/6E0*	E		2962	X30XE	A	-		02/94 ▸	1341017	**819830**	95		100		22X1.5	29	
T1003098 ▸																			
3.0 i V6 24V	*M35, VBZ406*	E		2962	X30XE	M	-		02/94 ▸	1341017	**819830**	95		100		22X1.5	29	
▸ T1003097																			
3.2 i V6 24V		E		3175	Y32SE	A	+		09/00 ▸	1341036	**820309**	95	105	100	110	22X1.5	29	
3.2 i V6 24V		E		3175	Y32SE	A	+		09/00 ▸	1846325	**820311**	100	115	105	120	22X1.5	29	
2.5 TD	*M35/, VB9/406/469*	D		2497	X25TD, U25TD	M	+		02/94 ▸	1341037	**820312**	100	110	105	115	22X1.5	29	
2.5 TD	*M35/, VB9/406/469*	D		2497	U25TD, X25TD	M	+		02/94 ▸	1341021	**820212**	92		97		22X1.5	29	
2.5 TD	*M35/, VB9/406/469*	D		2497	U25TD, X25TD	M	-		02/94 ▸	1341026	**820037**	90	100	95	105	22X1.5	29	
2.5 TD	*M35/, VB9/406/606/669*	D		2497	U25TD, X25TD	A	+		02/94 ▸	1341021	**820212**	92		97		22X1.5	29	
2.5 TD	*M35/, VB9/406/606/669*	D		2497	U25TD, X25TD	A	+		02/94 ▸	1341037	**820312**	100	110	105	115	22X1.5	29	

• **New** Nouveau **Nuevo** Novo **Nuovo** Nieuw **Neu** Yeni Новый Nou

		Type Ctr.		cc		AC			OE	Valeo	(°)C T1	T2	T3	T4	COD.	○: mm	
OPEL (.../...)																			
Omega B (94>) (.../...)																			
2.5 TD	*M35/, VB9/406/606/669*	D	2497	X25TD, U25TD	A	-		02/94 ▸	1341026	**820037**	90	100	95	105	22X1.5	29
Senator A (78>87)																			
2.0 i	*AVC429*	E	1979	20E	M			12/82 ▸ 07/84	1341002	**819746**	95		100		22X1.5	29
2.0 i	*AVC502*	E	1979	20E	A			12/82 ▸ 07/84	1341002	**819746**	95		100		22X1.5	29
2.2 i	*AVH/402/429/802/829*	E	2197	22E	M			08/84 ▸ 02/87	1341002	**819746**	95		100		22X1.5	29
2.2 i	*AVH/602/629*	E	2197	22E	A			08/84 ▸ 02/87	1341002	**819746**	95		100		22X1.5	29
2.5 i	*AVJ429*	E	2490	25E	M			06/81 ▸ 02/87	1341002	**819746**	95		100		22X1.5	29
2.5 i	*AVJ629*	E	2490	25E	A			06/81 ▸ 02/87	1341002	**819746**	95		100		22X1.5	29
3.0,3.0 i	*AVN/402/429*	E	2968	C30NE, 30E	M			06/78 ▸ 02/87	1341002	**819746**	95		100		22X1.5	29
3.0	*AVN/529/602/629*	E	2968	30E	A			06/78 ▸ 02/87	1341002	**819746**	95		100		22X1.5	29
2.3 TD	*AVE429*	D	2260	23TD	M			08/84 ▸ 02/87	1341003	**819760**	86		95		22X1.5	29
2.3 TD	*AVE629*	D	2260	23TD	A			08/84 ▸ 02/87	1341003	**819760**	86		95		22X1.5	29
Senator B (87>93)																			
2.5 i	*VJ419*	E	2490	25NE	M			▸ 08/90	1341017	**819830**	95		100		22X1.5	29
0053436 ▸																			
2.5 i	*VJ6/19, VJA/601/619*	E	2490	25NE	A			▸ 08/90	1341017	**819830**	95		100		22X1.5	29
0053436 ▸																			
2.5 i	*VJ419*	E	2490	25NE	M			02/87 ▸	1341002	**819746**	95		100		22X1.5	29
▸ 0053435																			
2.5 i	*VJ6/19, VJA/601/619*	E	2490	25NE	A			02/87 ▸	1341002	**819746**	95		100		22X1.5	29
▸ 0053435																			
3.0 i,3.0 i 24V	*VNA419, VQ419, VSR419*	E	2968	C30NE, C30SE, 30NE	M			▸ 06/93	1341017	**819830**	95		100		22X1.5	29
0011335 ▸	*VN4/19*																		
3.0 i,3.0 i 24V	*VNA619, VQ619, VN6/19*	E	2968	C30SE, 30NE, C30NE	A			▸ 06/93	1341017	**819830**	95		100		22X1.5	29
0109242 ▸	*VSR/061/619*																		
3.0 i,3.0 i 24V	*VNA419, VQ419, VSR419*	E	2968	30NE, C30NE, C30SE	M			02/87 ▸	1341002	**819746**	95		100		22X1.5	29
▸ 0109241	*VN4/19*																		
3.0 i,3.0 i 24V	*VNA619, VQ619, VN6/19*	E	2968	C30SE, 30NE, C30NE	A			02/87 ▸	1341002	**819746**	95		100		22X1.5	29
▸ 0109241	*VSR/061/619*																		
Sintra																			
2.2 i 16V	*U06A*	E	2198	X22XE	M	+		03/96 ▸ 12/99	1846325	**820311**	100	115	105	120	22X1.5	29
2.2 i 16V	*U06A*	E	2198	X22XE	M	-		03/96 ▸ 12/99	1341017	**819830**	95		100		22X1.5	29
3.0 i V6 24V	*U06/8*	E	2962	X30XE	A	+/-		03/96 ▸ 12/99	1341017	**819830**	95		100		22X1.5	29
3.0 i V6 24V	*U06/8*	E	2962	X30XE	A	+/-		03/96 ▸ 12/99	1846325	**820311**	100	115	105	120	22X1.5	29
Tigra (94>2003)																			
1.4 i 16V	*F07*	E	1389	X14XE	M			10/94 ▸	1341011	**819830**	95		100		22X1.5	29
1.4 i 16V	*F07*	E	1389	X14XE	A			10/94 ▸	1341011	**819830**	95		100		22X1.5	29
1.4 i,1.4 i 16V	*F07*	E	1389	C14SE,X14XE	M	+	+ Cable	10/94 ▸ 01/01	1846201	**820227**	115	100	120	105	22x1.5	29
1.4 i 16V	*F07*	E	1389	X14XE	A	+	+ Cable	10/94 ▸ 01/01	1846201	**820227**	115	100	120	105	22x1.5	29
1.6 i 16V	*F07*	E	1598	X16XE	M			10/94 ▸	1341011	**819830**	95		100		22X1.5	29
1.6 i,1.6 i 16V	*F07*	E	1598	C16SEL,X16XE	M	+	+ Cable	10/94 ▸ 01/01	1846201	**820227**	115	100	120	105	22x1.5	29
Vectra A (88>95)																			
1.4	*JV3/419/468*	E	1389	14NV	M	-		09/88 ▸ 06/89	1341011	**819830**	95		100		22X1.5	29
1.4	*JV3/419/468*	E	1389	14NV	M	-	+ Cable	09/88 ▸ 06/89	1341012	**820206**	95		100		22X1.5	29
1.4	*JV3/419/468*	E	1389	14NV	M	-		07/89 ▸ 07/92	1341023	**820038**	95		100		22X1.5	29
1.6 S,1.6 i	*JVQ/419/468, JVR/419/468 JVU/419/468*	E	1598	E16NZ, 16SV, C16NZ	M	-		09/88 ▸ 06/89	1341011	**819830**	95		100		22X1.5	29
1.6 S,1.6 i	*JVQ/419/468, JVR/419/468 JVU/419/468*	E	1598	C16NZ, E16NZ, 16SV	M	-	+ Cable	09/88 ▸ 06/89	1341012	**820206**	95		100		22X1.5	29
1.6 S,1.6 i	*JVQ/419/468, JVR/419/468 JVU/419/468*	E	1598	C16NZ, E16NZ, 16SV	M	-		07/89 ▸ 09/95	1341023	**820038**	95		100		22X1.5	29
1.6 S,1.6 i	*JVR/619, JVU/619/668*	E	1598	16SV, C16NZ	A	-		09/88 ▸ 06/89	1341011	**819830**	95		100		22X1.5	29
1.6 S,1.6 i	*JVR/619, JVU/619/668*	E	1598	16SV, C16NZ	A	-	+ Cable	09/88 ▸ 06/89	1341012	**820206**	95		100		22X1.5	29
1.6 S,1.6 i	*JVR/619, JVU/619/668*	E	1598	C16NZ, 16SV	A	-		07/89 ▸ 09/95	1341023	**820038**	95		100		22X1.5	29
1.8,1.8 i	*JVT/419/468*	E	1796	C18NZ, E18NVR	M	-		09/88 ▸ 06/89	1341011	**819830**	95		100		22X1.5	29
1.8,1.8 i	*JVT/419/468*	E	1796	C18NZ, E18NVR	M	-	+ Cable	09/88 ▸ 06/89	1341012	**820206**	95		100		22X1.5	29
1.8,1.8 i	*JVT/419/468*	E	1796	C18NZ, E18NVR	M	-		07/89 ▸ 09/95	1341023	**820038**	95		100		22X1.5	29
1.8 i	*JVT619*	E	1796	C18NZ	A	-		09/88 ▸ 06/89	1341011	**819830**	95		100		22X1.5	29
1.8 i	*JVT619*	E	1796	C18NZ	A	-	+ Cable	09/88 ▸ 06/89	1341012	**820206**	95		100		22X1.5	29

• **New** Nouveau **Nuevo** Novo **Nuovo** Nieuw **Neu** Yeni Новый Nou

OPEL (.../...)

Vectra A (88>95) (.../...)

			CC		AC			OE	Valeo	(°)C T1	T2	T3	T4	COD.	mm	
1.8 i	JVT619	E	1796	C18NZ	A	-		07/89 ▸ 09/95	1341023	**820038**	95		100		22X1.5	29
2.0 i,2.0 i 16V,2000 i 2000 i 16V	JVB/041/046/419/468 JVH319, JVD/041/419/468 E04/E41, JVJ//031/319 JVT319, JVK/319/368, JVW 031/036/041/319/368/468 JXK319, JXJ/031/319	E	1998	20NE, C20NE, 20SEH, 20XE C20XE, X20XEV	M	+		03/90 ▸ 09/95	1846325	**820311**	100	115	105	120	22X1.5	29
2.0 i,2000 Turbo 16S	JVB/041/046/419/468 JVGX21, JVD/041/419/468 E04/E41	E	1998	C20NE, 20NE, C20LET	M	-		1990 ▸ 09/95	1341033	**820308**	82	90	87	95	22X1.5	29
2.0 i,2000 i,2000 i 16V	JVB/041/046/419/468 JVH319, JVJ, JVD/041/319 419/468/668, JXK319, JVK 319/368	E	1998	C20NE, 20NE, C20XE, 20SEH	M	-	+ Cable	09/88 ▸ 06/89	1341012	**820206**	95		100		22X1.5	29
2.0 i,2000 i,2000 i 16V	JVB/041/046/419/468 JVH319, JVJ, JVD/041/319 419/468/668, JXK319, JVK 319/368	E	1998	C20NE, 20NE, 20SEH, C20XE	M	-		09/88 ▸ 06/89	1341011	**819830**	95		100		22X1.5	29
2.0 i,2.0 i 16V 2000 Turbo 16S,2000 i 2000 i 16V	JVB/041/046/419/468 JVGX21, JVH319, JVD/041 319/419/468/668/E04/E41 JVJ//031/319, JVT319 JVK/319/368, JXK319, JXJ 031/319	E	1998	20NE, C20NE, 20XE, C20XE 20SEH, C20LET	M	-		07/89 ▸ 09/95	1341023	**820038**	95		100		22X1.5	29
2.0 i 16V	JVW/031/036/041/319/368 468	E	1998	X20XEV	M	-		09/93 ▸ 09/95	1341039	**820037**	90	100	95	105	22X1.5	29
2.0 i,2.0 i 16V	JVB/061/066/619/668, JVD 061/066/619/668/E06/E61 JVW/061/066	E	1998	C20NE, 20NE, X20XEV	A	+		1990 ▸ 09/95	1846325	**820311**	100	115	105	120	22X1.5	29
2.0 i	JVB/061/066/619/668, JVD/061/066 619/668/E06/E61	E	1998	C20NE, 20NE	A	-		1990 ▸ 09/95	1341033	**820308**	82	90	87	95	22X1.5	29
2.0 i	JVB/061/066/619/668, JVD/061/066 619/668	E	1998	20NE, C20NE	A	-	+ Cable	09/88 ▸ 06/89	1341012	**820206**	95		100		22X1.5	29
2.0 i	JVB/061/066/619/668, JVD/061/066 619/668	E	1998	20NE, C20NE	A	-		09/88 ▸ 06/89	1341011	**819830**	95		100		22X1.5	29
2.0 i	JVB/061/066/619/668, JVD/061/066 619/668/E06/E61	E	1998	C20NE, 20NE	A	-		07/89 ▸ 09/95	1341023	**820038**	95		100		22X1.5	29
2.5 i V6 24V	JVX/301/306/319	E	2498	C25XE	M	-		05/93 ▸ 09/95	1341027	**820036**	95	105	100	110	22x1.5	29
2.5 i V6 24V	JVX/601/606	E	2498	C25XE	A	-		05/93 ▸ 09/95	1341027	**820036**	95	105	100	110	22x1.5	29
1.7 D	JV8/419/468, JVF/419/468	D	1699	17D,17DR	M	-		1991 ▸ 09/95	1341027	**820036**	95	105	100	110	22x1.5	29
2.0 i 16V	JVW/061/066	E	1998	X20XEV	A	-		09/93 ▸ 09/95	1341039	**820037**	90	100	95	105	22X1.5	29
1.7 TD	JV9/401/406/419/468	D	1686	17TD	M	-	+ Cable	07/91 ▸ 09/95	1341024	**820219**	90	100	95	105	22X1.5	29
1.7 D ▸ KV999999	JVF/419/468	D	1699	17D	M	-		09/88 ▸ 1990	1341020	**820324**	95	105	100	110	2	
1.7 D L1000124 ▸ L1999999	JVF/419/468	D	1699	17D	M	-	+ Cable	07/89 ▸ 06/90	1341022	**820307**	95	105	100	110	22X1.5	29

Vectra B (95>99)

1.6 i,1.6 i 16V	F19, F68	E	1598	16LZ2, X16XEL, X16SZR	M	+		10/95 ▸ 01/99	1341042	**820241**	100	95	105	100	2	
1.6 i,1.6 i 16V	F19, F68	E	1598	X16XEL, 16LZ2, X16SZR	M	-		10/95 ▸ 01/99	1341011	**819830**	95		100		22X1.5	29
1.6 i 16V		E	1598	X16XEL	A	+		10/95 ▸ 01/99	1341042	**820241**	100	95	105	100	2	
1.6 i 16V		E	1598	X16XEL	A	-		10/95 ▸ 01/99	1341011	**819830**	95		100		22X1.5	29
1.8 i 16V	F19, F68	E	1799	X18XE	M	-		10/95 ▸ 01/99	1341042	**820241**	100	95	105	100	2	
1.8 i 16V		E	1799	X18XE	A	-		10/96 ▸ 01/99	1341042	**820241**	100	95	105	100	2	
2.0 i,2.0 i 16V	F19, F68	E	1998	X20XEV, 20NEJ	M	+/-		10/95 ▸ 01/99	1341042	**820241**	100	95	105	100	2	
2.0 i,2.0 i 16V	F19, F68	E	1998	20NEJ, X20XEV	A	+/-		10/95 ▸ 01/99	1341042	**820241**	100	95	105	100	2	
2.5 i V6 24V		E	2498	X25XE-170	M	+		10/95 ▸ 01/99	1341042	**820241**	100	95	105	100	2	
2.5 i V6 24V		E	2498	X25XE-170	M	-		10/95 ▸ 01/99	1341041	**820310**	100	105	105	110	22X1.5	29
2.5 i V6 24V		E	2498	X25XE-170	M	-		10/95 ▸ 01/99	1341047	**819830**	95		100		22X1.5	29
2.5 i V6 24V		E	2498	X25XE-170	A	+		10/95 ▸ 01/99	1341042	**820241**	100	95	105	100	2	
2.5 i V6 24V		E	2498	X25XE-170	A	-		10/95 ▸ 01/99	1341047	**819830**	95		100		22X1.5	29
2.5 i V6 24V		E	2498	X25XE-170	A	-		10/95 ▸ 01/99	1341041	**820310**	100	105	105	110	22X1.5	29
2.0 Di 16V		D	1995	X20DTL	M	+		10/96 ▸ 01/99	1341042	**820241**	100	95	105	100	2	
2.0 Di 16V		D	1995	X20DTL	M	-		10/96 ▸ 01/99	1341041	**820310**	100	105	105	110	22X1.5	29

• **New** Nouveau **Nuevo** Novo **Nuovo** Nieuw **Neu** Yeni Новый Nou

		Type Ctr.		cc			AC			OE	Valeo	(°)C T1	T2	T3	T4	COD.	mm	
OPEL (.../...)																				
Vectra B (95>99) (.../...)																				
2.0 Di 16V		D	1995	X20DTL		M	-		10/96 ▸ 01/99	1341047	**819830**	95		100		22X1.5	29	
Vectra B (99>2002)																				
1.6 i 16V	*0JU/19I/35I/68I*	E	1598	Z16XE		M	+/-		02/99 ▸	1341011	**819830**	95		100		22X1.5	29	
1.6 i 16V	*0JU/19I/35I/68I*	E	1598	Z16XE		A	+/-		02/99 ▸	1341011	**819830**	95		100		22X1.5	29	
1.8 i 16V	*0JU/19K/35K/68K, 0JX/19K 35K/68K*	E	1796	Z18XE		M	+/-		02/99 ▸	1341042	**820241**	100	95	105	100	2		
1.8 i 16V	*0JU/19K/35K/68K, 0JX/19K 35K/68K*	E	1796	Z18XE		A	+/-		02/99 ▸	1341042	**820241**	100	95	105	100	2		
2.6 i V6 24V	*0JU/19T/35T/68T, 0JX/19T 35T/68T*	E	2597	Y26SE		M	+/-		09/00 ▸	1341047	**819830**	95		100		22X1.5	29	
2.6 i V6 24V	*0JU/19T/35T/68T, 0JX/19T 35T/68T*	E	2597	Y26SE		M	+/-		09/00 ▸	1341041	**820310**	100	105	105	110	22X1.5	29	
2.6 i V6 24V	*0JU/19T/35T/68T, 0JX/19T 35T/68T*	E	2597	Y26SE		M	+		09/00 ▸	1341042	**820241**	100	95	105	100	2		
2.6 i V6 24V	*0JU/19T/35T/68T, 0JX/19T 35T/68T*	E	2597	Y26SE		A	+/-		09/00 ▸	1341047	**819830**	95		100		22X1.5	29	
2.6 i V6 24V	*0JU/19T/35T/68T, 0JX/19T 35T/68T*	E	2597	Y26SE		A	+/-		09/00 ▸	1341041	**820310**	100	105	105	110	22X1.5	29	
2.6 i V6 24V	*0JU/19T/35T/68T, 0JX/19T 35T/68T*	E	2597	Y26SE		A	+		09/00 ▸	1341042	**820241**	100	95	105	100	2		
OPEL																				
Arena																				
1.9 D	*TF1/L, THB/J/L*	D	1870	F8Q.6.06, F8Q.6.00		M			01/98 ▸ 08/01	4402309	**819745**	82		92		22X1.5	29	
2.5 D	*TF1/G/M, THB/G/M*	D	2445	S8U.7.80, S8U.7.82		M			01/98 ▸ 08/01	4402309	**819745**	82		92		22X1.5	29	
Combo (85>93)																				
1.6 D	*E5T433*	D	1598	16D		M			1990 ▸ 06/90	1341025	**820036**	95	105	100	110	22x1.5	29	
1.7 D	*PBV438, T3448*	D	1699	17D		M			08/90 ▸ 03/93	1341025	**820036**	95	105	100	110	22x1.5	29	
Combo (93>2001)																				
1.2,1.2 i		E	1195	X12SZ, 12NZ, C12NZ		M	-		03/93 ▸ 09/01	1341011	**819830**	95		100		22X1.5	29	
1.4 i		E	1389	C14NZ, X14SZ, C14SE		M	-		03/93 ▸ 09/01	1341011	**819830**	95		100		22X1.5	29	
1.2 i		E	1195	C12NZ,X12SZ		M	+/-	+ Cable	03/93 ▸ 09/01	1846201	**820227**	115	100	120	105	22x1.5	29	
1.4 i		E	1389	C14NZ,C14SE		M	+	+ Cable	03/93 ▸ 09/01	1846201	**820227**	115	100	120	105	22x1.5	29	
1.4 i 16V		E	1389	X14XE		M		+ Cable	08/99 ▸ 09/01	1846201	**820227**	115	100	120	105	22x1.5	29	
1.4 i ▸ T4257027		E	1389	X14SZ		M	-	+ Cable	07/95 ▸ 1996	1846201	**820227**	115	100	120	105	22x1.5	29	
1.7 D		D	1686	X17D		M	+/-		07/95 ▸ 09/01	1341030	**●820828**	95		100		22X1.5		
1.7 D		D	1699	17D		M	+/-		03/93 ▸ 09/01	1341030	**●820828**	95		100		22X1.5		
Movano																				
1.9 Dti	*FD, JD*	D	1870	F9Q.7.70		M	-		08/00 ▸ 07/02	4402309	**819745**	82		92		22X1.5	29	
2.5 D	*FD, JD, ED*	D	2445	S8U.7.72		M	+/-		10/98 ▸ 10/01	4402309	**819745**	82		92		22X1.5	29	
2.5 D	*ED*	D	2445	S8U.7.72		M	+		10/98 ▸ 10/01	4500754	**820032**	78	82	88	92	22X1.5	29	
2.8 Dti	*FD, JD, UD, ED*	D	2800	S9W.7.02, S9W.7.00		M	+		10/98 ▸ 10/01	4500754	**820032**	78	82	88	92	22X1.5	29	
2.8 Dti	*FD, JD, UD, ED*	D	2800	S9W.7.02, S9W.7.00		M	-		10/98 ▸ 10/01	4402309	**819745**	82		92		22X1.5	29	
PEUGEOT																				
104																				
1.0	*104/A01/A21/A41/C01/C07/S01*	E	954	XV8, XV5, XV3		M			07/72 ▸ 06/87	126414	**819757**	79		88		22X1.5	29	
1.1	*104/A11/A12/A17/C11/C12/C17/S01/S11*	E	1124	XW7, XW3, XW3S		M			07/75 ▸ 05/88	126414	**819757**	79		88		22X1.5	29	
1.2	*104/A21/A27*	E	1219	XZ5		M			07/79 ▸ 06/84	126414	**819757**	79		88		22X1.5	29	
1.4	*104/A31/A37/C31/C37/C91*	E	1360	XY8, XYR, XY6B		M			08/78 ▸ 07/85	126414	**819757**	79		88		22X1.5	29	
106 (91>96)																				
1.0,1.0 i	*1AC/1A1/DY1/DY2/DZ1/DZ2 1CC/1A1/1A2/DY1/DY2/DZ1 DZ2, 1SC/1A1/DY1/DZ2*	E	954	TU9M, TU9, TU9MPR		M	+/-		09/91 ▸ 03/96	126440	**819752**	92		97		22X1.5	29	

• **New** Nouveau **Nuevo** Novo **Nuovo** Nieuw **Neu** Yeni Новый Nou

		Type Ctr.		cc		AC			OE	Valeo	(°)C T1	T2	T3	T4	COD.	mm	
PEUGEOT (.../...)																			
106 (91>96) (.../...)																			
1.1,1.1 i	*1AH/1A1/1A2/3A1/3A2/DY2 DZ1/DZ2, 1CH/1A1/1A2/3A1 DY1/DY2/DZ1/DZ2/DZ8, 1SH 1A1/1A2/3A1/DZ2*	E	1124	TU1M, TU1TR, TU1	M	-		09/91 ▸ 03/96	126440	**819752**	92		97		22X1.5	29
1.3 i	*1CMFZ2*	E	1294	TU2J2	M	-		06/93 ▸ 03/96	126440	**819752**	92		97		22X1.5	29
1.4 i	*1CK/6B2/FZ2*	E	1360	TU3J2, TU3FJ2	M	+/-		09/91 ▸ 03/96	126445	**819747**	92	96	97	101	22X1.5	29
1.4,1.4 i	*1AK/2D2/3A2/DX8/DY2, 1CK 2D2/3A2/6B2/DX2/DX8/DY2 FZ2*	E	1360	TU3.2, TU3FMC, TU3, TU3M TU3FJ2, TU3J2	M	+/-		09/91 ▸ 03/96	126440	**819752**	92		97		22X1.5	29
1.6 i	*1AN/FZ2, 1CN/FY2/FZ2*	E	1587	TU5JP, TU5J2	M	-		06/93 ▸ 03/96	126440	**819752**	92		97		22X1.5	29
1.6 i	*1ANFZ4, 1CNFZ4*	E	1587	TU5JP	A	-		06/93 ▸ 03/96	126445	**819747**	92	96	97	101	22X1.5	29
1.4 D	*1AK/9B1/9B2/9B9/9Y2, 1CK/9B1/9B2 9Y2, 1SK/9B1/9B2/9B9/9Y2*	D	1360	TUD3	M	-		06/92 ▸ 03/96	126440	**819752**	92		97		22X1.5	29
1.5 D	*1AV/JY2/JZ2, 1SVJY2, 1CV/JY2/JZ2*	D	1527	TUD5	M	+/-		07/94 ▸ 03/96	126440	**819752**	92		97		22X1.5	29
1.5 D	*1AV/JY2/JZ2, 1SVJY2, 1CV/JY2/JZ2*	D	1527	TUD5	M	+/-		07/94 ▸ 03/96	126445	**819747**	92	96	97	101	22X1.5	29
106 (96>2003)																			
1.0 i	*1AC/DYE/DZD/DZE/DZW, 1CC/DYE/DZD DZE/DZW, 1SC/DZD/DZE*	E	954	TU9M	M			03/96 ▸	126440	**819752**	92		97		22X1.5	29
1.1,1.1 i,1.1 i GPL	*1AH/3A2/3A8/DYE/DZD/DZE 1CH/3A2/DYE/DZD/DZE, 1SH DZD/DZE*	E	1124	TU1M+, TU1TR	M			03/96 ▸	126440	**819752**	92		97		22X1.5	29
1.4,1.4 i	*1AK/5A2/FXE/FXS/FXT/FXU 1CK/5A2/FXD/FXE/FXS/FXT FXU*	E	1360	TU3.2, TU3JP	M	+/-		03/96 ▸	126440	**819752**	92		97		22X1.5	29
1.4 i	*1AKFXL, 1CKFXL*	E	1360	TU3JP	A			05/97 ▸	126440	**819752**	92		97		22X1.5	29
1.6 i	*1AN/FZE/FZT, 1CN/FZE/FZT*	E	1587	TU5JP	M	+/-		03/96 ▸	126440	**819752**	92		97		22X1.5	29
1.6 i,1.6 i 16V	*1AN/FZE, 1CN/FWE/FX2/FXE FZE*	E	1587	TU5J2, TU5J4, TU5JP	M			03/96 ▸	126445	**819747**	92	96	97	101	22X1.5	29
1.6 i	*1ANFZL, 1CNFZL*	E	1587	TU5JP	A			03/96 ▸	126445	**819747**	92	96	97	101	22X1.5	29
1.5 D	*1AV/JUF/JXF/JYE/JYF/JZD/JZE/JZF 1CV/JUF/JXF/JYE/JYF/JZD/JZE/JZF 1SV/JYE/JZD/JZE*	D	1527	TUD5, TUD5B	M	+/-		03/96 ▸	126440	**819752**	92		97		22X1.5	29
1.5 D	*1AV/JYE/JYF/JZD/JZE/JZF; 1CV/JYE JYF/JZD/JZE/JZF; 1SV/JYE/JZD/JZE*	D	1527	TUD5	M			03/96 ▸	126445	**819747**	92	96	97	101	22X1.5	29
204																			
1.1	*620.12, 521/.02/.12, 623/.02/.12*	E	1127	XK5	M			09/75 ▸ 06/77	126415	**819744**	82		92		22X1.5	29
1.1	*200/0/1, 201/0/1, 203/0/1, 204/1/6 208/0/1, 209/0/1, 240/0/1, 241/0/1 251/0/1, 2711, 2791, 259/0/1*	E	1130	XK4, XK	M			07/65 ▸ 06/77	126415	**819744**	82		92		22X1.5	29
1.2 D	*2515*	D	1225	XLD	M			09/67 ▸ 06/77	126415	**819744**	82		92		22X1.5	29
1.4 D	*2595, 2795, 521/.52*	D	1357	XLD4	M			03/73 ▸ 06/77	126415	**819744**	82		92		22X1.5	29
205																			
1.0,1.0 i	*20A/C11/C12/CD1/CD2/N11 N12, 20SC11, 20C/C11/C12 CD1/CD2/L11/N11/N12, 741 A01/A07/C01/C07*	E	954	TU9, TU9M, XV8	M			02/83 ▸	126414	**819757**	79		88		22X1.5	29
1.0,1.0 i	*20A/C11/C12/CD1/CD2/N11 N12, 20SC11, 20C/C11/C12 CD1/CD2/L11/N11/N12, 741 A01/A07/C01/C07*	E	954	TU9, TU9M, XV8	M			02/83 ▸	126417	**819770**	83	88	87	92	22X1.5	29
1.0,1.0 i	*20A/C11/C12/N11/N12 20SC11, 20C/C11/C12/CD1 CD2/L11/N11/N12*	E	954	XV8, TU9, TU9M	M			08/87 ▸ 01/90	126418	**819773**	88	92	93	97	22X1.5	29
1.0,1.0 i	*20A/C11/C12/N11/N12 20SC11, 20C/C11/C12/CD1 CD2/L11/N11/N12*	E	954	TU9M, XV8, TU9	M			08/87 ▸ 01/90	126416	**819772**	79	83	84	88	22X1.5	29
1.0,1.0 i	*20A/C11/C12/N11/N12 20SC11, 20C/C11/C12/CD1 CD2/L11/N11/N12*	E	954	TU9M, XV8, TU9	M			08/87 ▸ 01/90	126420	**819760**	86		95		22X1.5	29

• **New** Nouveau **Nuevo** Novo **Nuovo** Nieuw **Neu** Yeni Новый Nou

PEUGEOT (.../...)

205 (.../...)

1.0,1.0 i	20A/C11/C12/N11/N12 20SC11, 20C/C11/C12/CD1 CD2/L11/N11/N12	E	954	TU9, XV8, TU9M	M			08/87 ▸ 01/90	126421	**819761**	92		97		22X1.5	29
1.0,1.0 i	20A/C11/C12/N11/N12 20SC11, 20C/C11/C12/CD1 CD2/L11/N11/N12	E	954	XV8, TU9M, TU9	M			08/87 ▸ 01/90	126422	**819771**	92	96	97	101	22X1.5	29
1.0,1.0 i	20A/C11/C12/CD2, 20SC11 20C/C11/C12/CD1/CD2	E	954	TU9, TU9M	M			01/90 ▸	126445	**819747**	92	96	97	101	22X1.5	29
1.0,1.0 i	20A/C11/C12/CD2, 20SC11 20C/C11/C12/CD1/CD2	E	954	TU9, TU9M	M			01/90 ▸	126440	**819752**	92		97		22X1.5	29
1.0,1.0 i	20A/C11/C12/CD2, 20SC11 20C/C11/C12/CD1/CD2	E	954	TU9, TU9M	M			01/90 ▸	126427	**819754**	79	83	84	88	22X1.5	29
1.0,1.0 i	20A/C11/C12, 20SC11, 20C C11/C12/CD1/CD2	E	954	TU9, TU9M	M			01/90 ▸	126444	**819755**	88	92	93	97	22X1.5	29
1.0,1.0 i	20A/C11/C12/CD2, 20SC11 20C/C11/C12/CD1/CD2	E	954	TU9M, TU9	M			01/90 ▸	126423	**819751**	86		95		22X1.5	29
1.1	20S/E11/E12, 742/A11/A17/C11	E	1118	E1	M			07/84 ▸ 07/88	126416	**819772**	79	83	84	88	22X1.5	29
1.1	20S/E11/E12, 742/A11/A17/C11	E	1118	E1	M			07/84 ▸ 07/88	126418	**819773**	88	92	93	97	22X1.5	29
1.1	20S/E11/E12	E	1118	E1	M			08/87 ▸ 07/88	126422	**819771**	92	96	97	101	22X1.5	29
1.1	20S/E11/E12	E	1118	E1	M			08/87 ▸ 07/88	126414	**819757**	79		88		22X1.5	29
1.1	20S/E11/E12	E	1118	E1	M			08/87 ▸ 07/88	126420	**819760**	86		95		22X1.5	29
1.1	20S/E11/E12	E	1118	E1	M			08/87 ▸ 07/88	126417	**819770**	83	88	87	92	22X1.5	29
1.1	20S/E11/E12	E	1118	E1	M			08/87 ▸ 07/88	126421	**819761**	92		97		22X1.5	29
1.1,1.1 i	20A/F12/H11/H12/H31/H32 HD2/L11/L12, 20C/H11/H12 H31/HD2/L11/L12/M11, 20D H12/HD2, 20S/H11/H12/HD2 741/A11/A17/C11/C17/S11 S17	E	1124	TU1, TU1TR, XW7, TU1M, F1	M			02/83 ▸	126417	**819770**	83	88	87	92	22X1.5	29
1.1,1.1 i	20A/F12/H11/H12/H31/H32 HD2/L11/L12, 20C/H11/H12 H31/HD2/L11/L12/M11, 20D H12/HD2, 20S/H11/H12/HD2 741/A11/A17/B17/C11/C17 S11/S17	E	1124	XW7, TU1, TU1M, TU1TR, F1	M			02/83 ▸	126414	**819757**	79		88		22X1.5	29
1.1,1.1 i	20A/F12/H11/H12/L11/L12 20DH12, 20C/H11/H12/L11 L12/M11, 742A27, 20S/H11 H12/HD2	E	1124	TU1, XW7, F1, TU1M	M			07/84 ▸ 01/90	126416	**819772**	79	83	84	88	22X1.5	29
1.1,1.1 i	20A/F12/H11/H12/L12 20DH12, 20C/H11/H12/L11 L12/M11, 742A27, 20S/H11 H12/HD2	E	1124	TU1, XW7, F1, TU1M	M			07/84 ▸ 01/90	126418	**819773**	88	92	93	97	22X1.5	29
1.1,1.1 i	20A/F12/H11/H12/L11/L12 20DH12, 20C/H11/H12/L11 L12/M11, 20S/H11/H12/HD2	E	1124	TU1, XW7, F1, TU1M	M			08/87 ▸ 01/90	126421	**819761**	92		97		22X1.5	29
1.1,1.1 i	20A/H11/H12/L11/L12 20DH12, 20C/H11/H12/L11 L12/M11, 20S/H11/H12/HD2	E	1124	XW7, TU1, TU1M	M			08/87 ▸ 01/90	126420	**819760**	86		95		22X1.5	29
1.1,1.1 i	20A/F12/H11/H12/L11/L12 20DH12, 20C/H11/H12/L11 L12/M11, 20S/H11/H12/HD2	E	1124	TU1, XW7, TU1M, F1	M			08/87 ▸ 01/90	126422	**819771**	92	96	97	101	22X1.5	29
1.1,1.1 i	20A/F12/H11/H12/H31/H32 HD2, 20C/H11/H12/H31/HD2 M11, 20D/H12/HD2, 20S/H11 H12/HD2	E	1124	TU1, TU1M, TU1TR, F1	M			07/89 ▸	126423	**819751**	86		95		22X1.5	29
1.1,1.1 i	20A/F12/H11/H12/HD2, 20C H11/H12/HD2/M11, 20D/H12 HD2, 20S/H11/H12/HD2	E	1124	TU1, TU1M, F1	M			01/90 ▸	126440	**819752**	92		97		22X1.5	29
1.1,1.1 i	20A/F12/H11/H12/H31/H32 HD2, 20C/H11/H12/H31/HD2 M11, 20D/H12/HD2, 20S/H11 H12/HD2	E	1124	TU1, TU1M, F1, TU1TR	M			01/90 ▸	126427	**819754**	79	83	84	88	22X1.5	29

• **New** Nouveau **Nuevo** Novo **Nuovo** Nieuw **Neu** Yeni Новый Nou

PEUGEOT (.../...)

205 (.../...)

1.1,1.1 i	*20A/F12/H11/H12/H31/H32 20C/H11/H12/H31/M11, 20D H12/HD2, 20S/H11/H12/HD2*	E	1124	TU1, TU1TR, F1, TU1M	M			01/90 ▸	126444	**819755**	88	92	93	97	22X1.5	29
1.1,1.1 i	*20A/F12/H11/H12/H31/H32 HD2, 20C/H11/H12/H31/HD2 M11, 20D/H12/HD2, 20S/H11 H12/HD2*	E	1124	TU1TR, TU1, TU1M, F1	M			01/90 ▸	126445	**819747**	92	96	97	101	22X1.5	29
1.3	*20A/G12, 20C/G12/M22, 742/A47/C47*	E	1294	G1A, G1, TU24	M			07/84 ▸ 01/90	126416	**819772**	79	83	84	88	22X1.5	29
1.3	*20A/G12, 20C/G12/M22, 742/A47/C47*	E	1294	TU24, G1A, G1	M			07/84 ▸ 01/90	126418	**819773**	88	92	93	97	22X1.5	29
1.3	*20CM22, 20SG12*	E	1294	TU24, G1A	M			08/87 ▸ 01/90	126420	**819760**	86		95		22X1.5	29
1.3	*20A/G12, 20SG12, 20C/G12/M22*	E	1294	G1A, TU24, G1	M			08/87 ▸ 01/90	126421	**819761**	92		97		22X1.5	29
1.3	*20A/G12, 20SG12, 20C/G12/M22*	E	1294	G1A, TU24, G1	M			08/87 ▸	126414	**819757**	79		88		22X1.5	29
1.3	*20A/G12, 20SG12, 20C/G12/M22*	E	1294	G1, TU24, G1A	M			08/87 ▸	126417	**819770**	83	88	87	92	22X1.5	29
1.3	*20A/G12, 20C/G12/M22*	E	1294	G1, G1A, TU24	M			08/87 ▸ 01/90	126422	**819771**	92	96	97	101	22X1.5	29
1.3	*20A/G12, 20C/G12/M22*	E	1294	G1, G1A, TU24	M			07/89 ▸	126423	**819751**	86		95		22X1.5	29
1.3	*20A/G12, 20C/G12/M22*	E	1294	TU24, G1A, G1	M			01/90 ▸	126440	**819752**	92		97		22X1.5	29
1.3	*20A/G12, 20C/G12/M22*	E	1294	TU24, G1A, G1	M			01/90 ▸	126444	**819755**	88	92	93	97	22X1.5	29
1.3	*20A/G12, 20C/G12/M22*	E	1294	G1A, TU24, G1	M			01/90 ▸	126445	**819747**	92	96	97	101	22X1.5	29
1.3	*20A/G12, 20C/G12/M22*	E	1294	G1A, G1, TU24	M			01/90 ▸	126427	**819754**	79	83	84	88	22X1.5	29
1.4,1.4 i	*20A/K11/K12/K22/K31/K32 KA2/KD2/KH1, 20C/K12/K22 KA2/KD2, 20D/K12/K22/KA2 T12, 20S/K11/K12/K31/L11 L12, 741/A37/A41/A47/A57 B57/C37/C47/C57/S41/S47*	E	1360	XY7, XY6B, TU3, TU3.2, TU3S TU3CP, TU3M, TU3A, TU3A1 XY8, XY7CP	M			02/83 ▸	126414	**819757**	79		88		22X1.5	29
1.4,1.4 i	*20A/K11/K12/K22/K31/K32 KA2/KD2/KH1, 20C/K12/K22 KA2/KD2, 20D/K12/K22/KA2 KD2, 20S/K11/K12/K31/L11 L12, 741/A37/A41/A47/A57 C37/C47/C57/S41/S47*	E	1360	TU3M, TU3, XY7, TU3.2, XY6B TU3S, TU3A, TU3A1, TU3CP XY8, XY7CP	M			02/83 ▸	126417	**819770**	83	88	87	92	22X1.5	29
1.4,1.4 i	*20A/K11/K12/K22/K31/K32 KA2, 20C/K12/K22/KA2/KD2 20D/K12/KA2, 20S/K11/K12 K31/L11/L12*	E	1360	TU3S, TU3A, TU3, XY7, TU3M TU3CP	M			08/87 ▸ 01/90	126418	**819773**	88	92	93	97	22X1.5	29
1.4,1.4 i	*20A/K11/K12/K22/K31/K32 KA2, 20C/K12/K22/KA2/KD2 20D/K12/K22/KA2, 20S/K11 K12/K31/L11/L12*	E	1360	TU3M, TU3A, TU3S, TU3, TU3.2 XY7, TU3CP	M			08/87 ▸ 01/90	126420	**819760**	86		95		22X1.5	29
1.4,1.4 i	*20A/K11/K12/K22/K31/K32 KA2, 20C/K12/KA2/KD2, 20D K12/K22/KA2, 20S/K11/K12 K31/L11/L12*	E	1360	TU3, TU3S, XY7, TU3A, TU3M TU3CP	M			08/87 ▸ 01/90	126416	**819772**	79	83	84	88	22X1.5	29
1.4,1.4 i	*20A/K11/K12/K22/K31/K32 KA2, 20C/K12/K22/KA2/KD2 20D/K12/K22/KA2, 20S/K11 K12/K31/L11/L12*	E	1360	TU3, TU3S, TU3M, TU3A, XY7 TU3.2, TU3CP	M			08/87 ▸ 01/90	126421	**819761**	92		97		22X1.5	29
1.4,1.4 i	*20A/K11/K12/K22/K31/K32 KA2, 20C/K12/K22/KA2/KD2 20D/K12/K22/KA2, 20S/K11 K12/K31/L11/L12*	E	1360	TU3M, XY7, TU3S, TU3, TU3A TU3.2, TU3CP	M			08/87 ▸ 01/90	126422	**819771**	92	96	97	101	22X1.5	29
1.4,1.4 i	*20A/K11/K12/K22/K31/K32 KA2/KD2/KH1, 20C/K12/K22 KA2/KD2, 20D/K12/K22/KD2 20S/K11/K12/K31*	E	1360	TU3.2, TU3S, TU3M, TU3A1, TU3 TU3A	M			01/90 ▸	126445	**819747**	92	96	97	101	22X1.5	29
1.4,1.4 i	*20A/K11/K12/K22/K31/K32 KA2/KD2/KH1, 20C/K12/K22 KA2/KD2, 20D/K12/K22/KD2 20S/K11/K12/K31*	E	1360	TU3A, TU3, TU3M, TU3S, TU3.2 TU3A1	M			01/90 ▸	126423	**819751**	86		95		22X1.5	29
1.4,1.4 i	*20A/K11/K12/K22/K31/K32 KA2/KH1, 20C/K12/K22/KA2 KD2, 20D/K12/K22/KD2, 20S K11/K12/K31*	E	1360	TU3A, TU3M, TU3.2, TU3S TU3A1, TU3	M			01/90 ▸	126444	**819755**	88	92	93	97	22X1.5	29

• **New** Nouveau **Nuevo** Novo **Nuovo** Nieuw **Neu** Yeni Новый Nou

PEUGEOT (.../...)

205 (.../...)

1.4,1.4 i	*20A/K11/K12/K22/K31/K32 KA2/KD2/KH1, 20C/K12/K22 KA2/KD2, 20D/K12/K22/KD2 20S/K11/K12/K31*	E	1360	TU3A, TU3M, TU3S, TU3.2 TU3A1, TU3	M			01/90 ▸	126427	**819754**	79	83	84	88	22X1.5	29
1.4,1.4 i	*20A/K11/K12/K22/K31/K32 KD2/KH1, 20C/K12/K22/KA2 KD2, 20D/K12/K22/KD2, 20S K11/K12/K31*	E	1360	TU3, TU3M, TU3A, TU3S, TU3.2 TU3A1	M			01/90 ▸	126440	**819752**	92		97		22X1.5	29
1.4	*742/A52/A57*	E	1442	Y2	M			07/84 ▸ 07/87	126416	**819772**	79	83	84	88	22X1.5	29
1.4	*742/A52/A57*	E	1442	Y2	M			07/84 ▸ 07/87	126418	**819773**	88	92	93	97	22X1.5	29
1.6,1.6 i	*20CB62, 20DB62, 741B66 20A/C27*	E	1580	XU51C, XU5JA, XU5J	M			02/83 ▸ 01/90	126418	**819773**	88	92	93	97	22X1.5	29
1.6,1.6 i	*20CB62, 20DB62, 741B66 20A/C27*	E	1580	XU5JA, XU51C, XU5J	M			02/83 ▸ 01/90	126416	**819772**	79	83	84	88	22X1.5	29
1.6,1.6 i	*20CB62, 20DB62, 741B66 20A/C27*	E	1580	XU5JA, XU51C, XU5J	M			02/83 ▸ 01/90	126422	**819771**	92	96	97	101	22X1.5	29
1.6,1.6 i	*20CB62, 20DB62, 741B66 20A/C27*	E	1580	XU5JA, XU51C, XU5J	M			02/83 ▸ 01/90	126420	**819760**	86		95		22X1.5	29
1.6,1.6 i	*20A/BD2/C27, 20C/B62/BD2 20D/B62/BA2/BD2, 741/A27 B66/C27/C66*	E	1580	XU5J, XU51C, XU5JA, XU5M XU5CP, XU5J1	M			02/83 ▸	126417	**819770**	83	88	87	92	22X1.5	29
1.6,1.6 i	*20A/BD2/C27, 20C/B62/BD2 20D/B62/BA2/BD2, 741/A27 B66/C27/C66*	E	1580	XU5JA, XU5M, XU51C, XU5CP XU5J, XU5J1	M			02/83 ▸	126414	**819757**	79		88		22X1.5	29
1.6,1.6 i	*20A/BD2/C27, 20C/B62/BD2 20D/B62/BA2/BD2*	E	1580	XU5M, XU51C, XU5JA, XU5J1	M			08/87 ▸	126427	**819754**	79	83	84	88	22X1.5	29
1.6,1.6 i	*20A/BD2/C27, 20C/B62/BD2 20D/B62/BA2/BD2*	E	1580	XU5M, XU51C, XU5JA, XU5J1	M			08/87 ▸	126423	**819751**	86		95		22X1.5	29
1.6,1.6 i	*20A/BD2, 20C/B62/BD2, 20D B62/BA2/BD2*	E	1580	XU5M, XU5JA, XU51C	M			01/90 ▸	126445	**819747**	92	96	97	101	22X1.5	29
1.6,1.6 i	*20A/BD2, 20C/B62/BD2, 20D B62/BA2/BD2*	E	1580	XU5M, XU5JA, XU51C	M			01/90 ▸	126444	**819755**	88	92	93	97	22X1.5	29
1.6,1.6 i	*20A/B14/BD4, 20C/B14/BD4 741/A28/C28*	E	1580	XU51C, XU5M, XU52C, XU5CP	A			02/83 ▸	126414	**819757**	79		88		22X1.5	29
1.6,1.6 i	*20A/B14/BD4, 20C/B14/BD4 741/A28/C28*	E	1580	XU5M, XU51C, XU52C, XU5CP	A			02/83 ▸	126417	**819770**	83	88	87	92	22X1.5	29
1.6,1.6 i	*20A/B14/BD4, 20C/B14/BD4*	E	1580	XU51C, XU5M, XU52C	A			08/87 ▸	126423	**819751**	86		95		22X1.5	29
1.6,1.6 i	*20A/B14/BD4, 20C/B14/BD4*	E	1580	XU51C, XU5M, XU52C	A			08/87 ▸	126427	**819754**	79	83	84	88	22X1.5	29
1.6 i	*20ABD4, 20CBD4*	E	1580	XU5M	A			06/90 ▸	126444	**819755**	88	92	93	97	22X1.5	29
1.6 i	*20ABD4, 20CBD4*	E	1580	XU5M	A			06/90 ▸	126445	**819747**	92	96	97	101	22X1.5	29
1.6	*20CJ22, 742C67*	E	1592	J2	M			07/84 ▸ 01/90	126418	**819773**	88	92	93	97	22X1.5	29
1.6	*20CJ22, 742C67*	E	1592	J2	M			07/84 ▸ 01/90	126416	**819772**	79	83	84	88	22X1.5	29
1.6	*20CJ22*	E	1592	J2	M			07/89 ▸ 01/90	126417	**819770**	83	88	87	92	22X1.5	29
1.6	*20CJ22*	E	1592	J2	M			07/89 ▸ 01/90	126414	**819757**	79		88		22X1.5	29
1.6	*20CJ22*	E	1592	J2	M			07/89 ▸ 01/90	126421	**819761**	92		97		22X1.5	29
1.6	*20CJ22*	E	1592	J2	M			07/89 ▸ 01/90	126422	**819771**	92	96	97	101	22X1.5	29
1.6	*20CJ22*	E	1592	J2	M			07/89 ▸ 06/93	126423	**819751**	86		95		22X1.5	29
1.6	*20CJ22*	E	1592	J2	M			01/90 ▸	126444	**819755**	88	92	93	97	22X1.5	29
1.6	*20CJ22*	E	1592	J2	M			01/90 ▸	126427	**819754**	79	83	84	88	22X1.5	29
1.6	*20CJ22*	E	1592	J2	M			01/90 ▸	126440	**819752**	92		97		22X1.5	29
1.6	*20CJ22*	E	1592	J2	M			01/90 ▸	126445	**819747**	92	96	97	101	22X1.5	29
1.9 i	*20DDF2, 741B86, 20C/D62/DF2*	E	1905	XU9J1, XU9JA	M			02/83 ▸ 01/90	126422	**819771**	92	96	97	101	22X1.5	29
1.9 i	*20C/B62/D62/DF2/DK2, 741B86, 20D DF2/HF2*	E	1905	XU9JA, XU9JAZ, XU9J1	M			02/83 ▸	126414	**819757**	79		88		22X1.5	29
1.9 i	*20C/B62/D62/DF2/DK2, 741B86, 20D DF2/HF2*	E	1905	XU9JA, XU9J1, XU9JAZ	M			02/83 ▸	126427	**819754**	79	83	84	88	22X1.5	29
1.9 i	*20DDF2, 741B86, 20C/D62/DF2*	E	1905	XU9JA, XU9J1	M			02/83 ▸ 01/90	126416	**819772**	79	83	84	88	22X1.5	29
1.9 i	*20DDF2, 741B86, 20C/D62/DF2*	E	1905	XU9J1, XU9JA	M			02/83 ▸ 01/90	126418	**819773**	88	92	93	97	22X1.5	29
1.9 i	*20DDF2, 741B86, 20C/D62/DF2*	E	1905	XU9J1, XU9JA	M			02/83 ▸ 01/90	126420	**819760**	86		95		22X1.5	29
1.9 i	*20C/B62/D62/DF2/DK2, 20D/DF2/HF2 741/B86/C86*	E	1905	XU9J1, XU9JA, XU9JAZ	M			02/83 ▸	126417	**819770**	83	88	87	92	22X1.5	29
1.9 i	*20C/DF2/DK2, 20D/DF2/HF2*	E	1905	XU9JAZ, XU9JA, XU9J1	M			01/90 ▸	126444	**819755**	88	92	93	97	22X1.5	29
1.9 i	*20C/DF2/DK2, 20D/DF2/HF2*	E	1905	XU9JAZ, XU9J1, XU9JA	M			01/90 ▸	126423	**819751**	86		95		22X1.5	29
1.9 i	*20C/DF2/DK2, 20D/DF2/HF2*	E	1905	XU9JA, XU9J1, XU9JAZ	M			01/90 ▸	126445	**819747**	92	96	97	101	22X1.5	29

• **New** Nouveau **Nuevo** Novo **Nuovo** Nieuw **Neu** Yeni Новый Nou

			Type Ctr.		cc			AC			OE	Valeo	(°)C T1	T2	T3	T4	COD.	mm	
PEUGEOT (.../...)																			
205 (.../...)																			
1.9 i	*20A/DF4, 20C/DF4/DK4, 20D/DF4/DK4*	E		1905	XU9JA, XU9JAZ	A			06/90 ▸	126423	**819751**	86		95		22X1.5	29
1.9 i	*20A/DF4, 20C/DF4/DK4, 20D/DF4/DK4*	E		1905	XU9JAZ, XU9JA	A			06/90 ▸	126417	**819770**	83	88	87	92	22X1.5	29
1.9 i	*20A/DF4, 20C/DF4/DK4, 20D/DF4/DK4*	E		1905	XU9JAZ, XU9JA	A			06/90 ▸	126414	**819757**	79		88		22X1.5	29
1.9 i	*20A/DF4, 20C/DF4/DK4, 20D/DF4/DK4*	E		1905	XU9JAZ, XU9JA	A			06/90 ▸	126444	**819755**	88	92	93	97	22X1.5	29
1.9 i	*20A/DF4, 20C/DF4/DK4, 20D/DF4/DK4*	E		1905	XU9JAZ, XU9JA	A			06/90 ▸	126445	**819747**	92	96	97	101	22X1.5	29
1.9 i	*20A/DF4, 20C/DF4/DK4, 20D/DF4/DK4*	E		1905	XU9JA, XU9JAZ	A			06/90 ▸	126427	**819754**	79	83	84	88	22X1.5	29
1.7 D,1.7 TD	*20A/A82/A91/A92, 20C/A82 A91/A92, 20TA92, 20S/A82 A91/A92*	D		1769	XUD7T, XUD7	M	+/-		08/87 ▸	126444	**819755**	88	92	93	97	22X1.5	29
1.7 D,1.7 TD	*20A/A82/A91/A92, 20C/A82 A91/A92, 20TA92, 20S/A82 A91/A92*	D		1769	XUD7T, XUD7	M	+		08/89 ▸	126445	**819747**	92	96	97	101	22X1.5	29
1.7 D	*741/A90/A98/C90/C98/S90/S98*	D		1769	XUD7	M			08/83 ▸ 07/87	126416	**819772**	79	83	84	88	22X1.5	29
1.7 D	*20A/A91/A92, 20C/A91/A92, 20S/A91 A92*	D		1769	XUD7	M			08/87 ▸ 02/90	126422	**819771**	92	96	97	101	22X1.5	29
1.7 D	*20A/A91/A92, 20C/A91/A92, 20S/A91 A92*	D		1769	XUD7	M			08/87 ▸ 01/90	126421	**819761**	92		97		22X1.5	29
1.9 D	*20CDJ2, 20SDJ2, 20A/DJ2*	D		1905	XUD9	M	+		06/90 ▸	126445	**819747**	92	96	97	101	22X1.5	29
1.9 D	*20CDJ2, 20SDJ2, 20A/DJ2*	D		1905	XUD9	M			08/89 ▸	126444	**819755**	88	92	93	97	22X1.5	29
1.9 D	*20SDJ2*	D		1905	XUD9	M			08/89 ▸ 01/90	126421	**819761**	92		97		22X1.5	29
1.9 D	*20SDJ2*	D		1905	XUD9	M			08/89 ▸ 02/90	126422	**819771**	92	96	97	101	22X1.5	29
206																			
1.1 i	*2AH/FXF/FYE/FZ2/FZE/FZW, 2EHFXF 2CH/FXF/FYE/FZ2/FZE/FZW, 2SH/FXU FZW*	E		1124	TU1JP	M	-		09/98 ▸ 10/05	126440	**819752**	92		97		22X1.5	29
1.4 i,1.4 i 16V	*2AK/6C2/6C8/FUA/FUF/FWF FXE/FXW, 2CK/6C2/FUF/FWF FXE/FXW, 2EK/FUF/FWA/FWF 2HK/FUA/FUF, 2KK/FUA/FUF*	E		1360	TU3JP, ET3J4	M	-		09/98 ▸	126440	**819752**	92		97		22X1.5	29
1.4 i	*2AK/FWR/FX4/FXP, 2CK/FWR/FXP*	E		1360	TU3JP	A	-		03/99 ▸	126440	**819752**	92		97		22X1.5	29
1.9 D	*2AW/JYF/JZT/JZW, 2CW/JYF/JZT/JZW 2SW/JYU/JZW, 2TW/JYU/JZW*	D		1868	DW8, DW8B	M	-		09/98 ▸	126440	**819752**	92		97		22X1.5	29
304																			
1.1	*304/D11/T11*	E		1127	XK5	M			09/76 ▸ 09/79	126414	**819757**	79		88		22X1.5	29
1.1	*304/D11/T11*	E		1127	XK5	M			09/76 ▸ 09/79	024212	**819758**	68		82		22X1.5	29
1.3	*304/A01/A91/B01/B02/C01/C02/D91/M01 M02*	E		1288	XL3S, XL3	M			07/69 ▸ 08/75	126414	**819757**	79		88		22X1.5	29
1.3	*304/A01/A91/B01/B02/C01/C02/D91/M01 M02*	E		1288	XL3, XL3S	M			07/69 ▸ 08/75	024212	**819758**	68		82		22X1.5	29
1.3	*304/D01/M01/M02/T01*	E		1290	XL5, XL5S	M			09/70 ▸ 03/80	024212	**819758**	68		82		22X1.5	29
1.3	*304/D01/M01/M02/T01*	E		1290	XL5S, XL5	M			09/70 ▸ 03/80	126414	**819757**	79		88		22X1.5	29
1.4 D	*304/D20/M20/T20*	D		1357	XL4D	M			09/76 ▸ 09/79	024212	**819758**	68		82		22X1.5	29
1.4 D	*304/D20/M20/T20*	D		1357	XL4D	M			09/76 ▸ 09/79	126414	**819757**	79		88		22X1.5	29
1.6 D	*304T30*	D		1548	XIDL	M			09/79 ▸ 03/80	024212	**819758**	68		82		22X1.5	29
1.6 D	*304T30*	D		1548	XIDL	M			09/79 ▸ 03/80	126414	**819757**	79		88		22X1.5	29
305																			
1.1	*581/AA1/DA1*	E		1127	XK5	M			11/77 ▸ 07/82	126414	**819757**	79		88		22X1.5	29
1.1	*581/EA1/MA1*	E		1127	XK5	M			08/82 ▸ 02/88	126415	**819744**	82		92		22X1.5	29
1.3	*581/A01/D01/T01*	E		1290	XL5	M			11/77 ▸ 07/82	126414	**819757**	79		88		22X1.5	29
1.3	*581/E01/M01/U10*	E		1290	XL5	M			08/82 ▸ 06/90	126415	**819744**	82		92		22X1.5	29
1.5	*581/A11/A12/A21/AC1/D11*	E		1472	XR5S, XR5	M			11/77 ▸ 07/82	126414	**819757**	79		88		22X1.5	29
1.5	*581/E11/E14/M11/U11*	E		1472	XR5, XR5A	M			08/82 ▸ 06/90	126415	**819744**	82		92		22X1.5	29
1.6	*581/E27/E56/M27/M56/U27*	E		1580	XU5S, XU51C, XU5CP	M			08/82 ▸ 06/90	126416	**819772**	79	83	84	88	22X1.5	29
1.6	*581/E27/E56/M27/M56/U27*	E		1580	XU51C, XU5S, XU5CP	M			08/82 ▸ 06/90	126414	**819757**	79		88		22X1.5	29
1.6	*581/E54/M54*	E		1580	XU5S	A			08/82 ▸ 06/90	126416	**819772**	79	83	84	88	22X1.5	29
1.6	*581/E54/M54*	E		1580	XU5S	A			08/82 ▸ 06/90	126414	**819757**	79		88		22X1.5	29
1.9,1.9 i	*581/E76/E86/M76/M86*	E		1905	XU92C, XU9S, XU9J1	M			08/82 ▸ 06/90	126404	**819749**	75		85		22X1.5	29
1.9,1.9 i	*581/E76/E86/M76/M86*	E		1905	XU9S, XU9J1, XU92C	M			08/82 ▸ 06/90	126416	**819772**	79	83	84	88	22X1.5	29
1.9,1.9 i	*581/E74/E84/M74/M84*	E		1905	XU9J1, XU92C, XU9S	A			08/82 ▸ 06/90	126416	**819772**	79	83	84	88	22X1.5	29
1.9,1.9 i	*581/E74/E84/M74/M84*	E		1905	XU9S, XU92C, XU9J1	A			08/82 ▸ 06/90	126404	**819749**	75		85		22X1.5	29
1.5 D	*581/A30/AB0/D30/D80/T30*	D		1548	X1D	M			11/77 ▸ 07/82	126404	**819749**	75		85		22X1.5	29

• **New** Nouveau **Nuevo** Novo **Nuovo** Nieuw **Neu** Yeni Новый Nou

		Type Ctr.		CC			AC			OE	Valeo	(°)C T1	T2	T3	T4	COD.	⌀: mm	
PEUGEOT (.../...)																		
305 (.../...)																		
1.7 D	*581/E68/M68/U60/U68*	D	1769	XUD7	M			08/82 ▸ 06/90	126416	**819772**	79	83	84	88	22X1.5	29	
1.7 D	*581/E68/M68/U60/U68*	D	1769	XUD7	M			08/82 ▸ 06/90	126414	**819757**	79		88		22X1.5	29	
1.9 D	*581/E40/E48/M40/M48/U40/U48*	D	1905	XUD9	M			08/82 ▸ 06/90	126414	**819757**	79		88		22X1.5	29	
1.9 D	*581/E40/E48/M40/M48/U40/U48*	D	1905	XUD9	M			08/82 ▸ 06/90	126416	**819772**	79	83	84	88	22X1.5	29	
306 (93>97)																		
1.1 i	*7AH/DY2/DZ2, 7CH/DY2/DZ2, 7SH/DY2 DZ2*	E	1124	TU1M	M			02/93 ▸ 02/97	126440	**819752**	92		97		22X1.5	29	
1.4,1.4 i	*7AK/2D2/3A2/DX2/DX9, 7BK 2D2/2D9/3A2/DX2/DX9/FX2 7CK/2D2/DX2/DX9, 7SK/2D2 DX2*	E	1360	TU3, TU3MC, TU3JP, TU3.2	M			02/93 ▸ 02/97	126440	**819752**	92		97		22X1.5	29	
1.6 i	*7AN/FZ2/FZ9, 7BN/FZ2/FZ9, 7DNFZ2 7CN/FZ2/FZ9*	E	1587	TU5JP	M			02/93 ▸ 02/97	126440	**819752**	92		97		22X1.5	29	
1.8 i	*7AL/6A2, 7BL/6A2/6A9/FZ2/FZ9, 7DL 6A2/FZ2*	E	1761	XU7JP	M			02/93 ▸ 02/97	126445	**819747**	92	96	97	101	22X1.5	29	
1.8 i	*7AL/6A2/6A9/FZ2/FZ8/FZ9, 7BL/6A2 6A9/FZ2/FZ8, 7CL/FZ2/FZ8/FZ9, 7DL 6A2/FZ2/FZ8*	E	1761	XU7JP	M			02/93 ▸ 02/97	126440	**819752**	92		97		22X1.5	29	
1.8 i	*7AL/6A4/FZ4, 7CLFZ4, 7BL/6A4/FZ4 7DL/6A4/FZ4*	E	1761	XU7JP	A			06/93 ▸ 02/97	126445	**819747**	92	96	97	101	22X1.5	29	
1.8 i	*7BL/6A4/FZ4, 7DL/6A4/FZ4*	E	1761	XU7JP	A			10/93 ▸ 02/97	126440	**819752**	92		97		22X1.5	29	
2.0 i	*7AR/6D2/FX2/FX8, 7BR/FX2/FX8, 7CR 6D2/FX2/FX8, 7DR/6D2/FX2*	E	1998	XU10J2C, XU10J2	M			06/93 ▸ 02/97	126440	**819752**	92		97		22X1.5	29	
2.0 i,2.0 i 16V	*7AR/FT2/FV2/FY2, 7BR/FX2 FX8, 7CR/FS2/FT2/FV2/FY2 7DR/6D2/FX2*	E	1998	XU10J4, XU10J2C, XU10J2 XU10J4R, XU10J4RS	M			09/93 ▸ 02/97	126445	**819747**	92	96	97	101	22X1.5	29	
2.0 i	*7BRFX4, 7CRFX4, 7DRFX4, 7AR/FX4*	E	1998	XU10J2C, XU10J2	A			09/93 ▸ 02/97	126445	**819747**	92	96	97	101	22X1.5	29	
2.0 i	*7BRFX4, 7DRFX4*	E	1998	XU10J2C, XU10J2	A			10/93 ▸ 02/97	126440	**819752**	92		97		22X1.5	29	
1.8 D	*7CA9A2, 7SA9A2, 7AA/9A2*	D	1769	XUD7	M	+/-		06/93 ▸ 02/97	126445	**819747**	92	96	97	101	22X1.5	29	
1.8 D	*7CA9A2, 7SA9A2, 7AA/9A2*	D	1769	XUD7	M	+/-		06/93 ▸ 02/97	126443	**819753**	91		93		22X1.5	29	
1.9 D	*7AD/9B2/JY2/JZ2, 7BD/9B2/JY2, 7CD 9B2/JY2/JZ2, 7SD/9B2/JY2/JZ2*	D	1905	XUD9A, XUD9	M	+/-		06/93 ▸ 02/97	126443	**819753**	91		93		22X1.5	29	
1.9 D,1.9 TD	*7AD/8A2/9B2/HY2/JY2/JZ2 7BD/8A2/9B2/HY2/JY2, 7CD 8A2/9B2/HY2/JY2/JZ2, 7SD 9B2/JY2/JZ2*	D	1905	XUD9TE, XUD9A, XUD9	M	+/-		06/93 ▸ 02/97	126445	**819747**	92	96	97	101	22X1.5	29	
1.9 TD	*7AD/8A2/HY2, 7BD/8A2/HY2 7CD/8A2/HY2*	D	1905	XUD9TE	M			06/93 ▸ 02/97	126444	**819755**	88	92	93	97	22X1.5	29	
1.9 TD	*7AD/8A2/HY2, 7BD/8A2/HY2 7CD/8A2/HY2*	D	1905	XUD9TE	M	+/-		06/93 ▸ 02/97	133827	**•820834**			60		14X1.25		
306 (97>)																		
1.4,1.4 i	*7AK/5A2/FXE/FXW, 7BK/5A2 FXE/FXT/FXW, 7CK/5A2/FXE FXW, 7SKFXE, 7EK/5A2/FXE FXT/FXW*	E	1360	TU3JP, TU3.2	M			03/97 ▸ 03/02	126440	**819752**	92		97		22X1.5	29	
1.6 i	*7AN/FZE/FZW, 7CNFZE, 7DNFZE, 7BN FZ8/FZE/FZW, 7EN/FZE/FZW*	E	1587	TU5JP, TU5JP+	M			03/97 ▸ 09/02	126440	**819752**	92		97		22X1.5	29	
1.8 i	*7DL6A2, 7EL6A2, 7BL/FZW*	E	1761	XU7JP	M			03/97 ▸ 09/02	126445	**819747**	92	96	97	101	22X1.5	29	
1.8 i,1.8 i 16V	*7AL/6A2/FYE/FYT/FYW, 7BL 6A2/FYE/FYT/FYW, 7CL/6A2 FYE, 7DL/6A2/FYE/FYT, 7EL 6A2/FYE/FYT/FYW*	E	1761	XU7JP4, XU7JP	M			03/97 ▸ 09/02	126440	**819752**	92		97		22X1.5	29	
1.8 i	*7AL/6A4/FZP, 7CLFZP, 7DLFZP, 7BL 6A4/FZ4/FZP, 7EL/6A4/FZP*	E	1761	XU7JP	A			03/97 ▸ 09/02	126445	**819747**	92	96	97	101	22X1.5	29	
1.8 i	*7DLFZP*	E	1761	XU7JP	A			03/97 ▸ 09/02	126440	**819752**	92		97		22X1.5	29	
2.0 i 16V	*7BRFVE, 7AR/FVE, 7CR/6E2 FVE, 7ERFVE, 7DR/6E2/FVE*	E	1998	XU10J4R	M			03/97 ▸ 09/02	126440	**819752**	92		97		22X1.5	29	
2.0 i 16V	*7AR/FVP, 7CRFVP, 7BR/FVP FVW, 7DR/FVP/FVW, 7ER/FVP FVW*	E	1998	XU10J4R	A			03/97 ▸ 09/02	126445	**819747**	92	96	97	101	22X1.5	29	
2.0 i 16V	*7BRFVP, 7CRFVP, 7AR/FVP*	E	1998	XU10J4R	A			03/97 ▸ 02/02	126440	**819752**	92		97		22X1.5	29	
1.8 D	*7CA9AT, 7SA9AE, 7AA/9AT*	D	1769	XUD7	M			03/97 ▸ 03/98	126444	**819755**	88	92	93	97	22X1.5	29	

• **New** Nouveau **Nuevo** Novo **Nuovo** Nieuw **Neu** Yeni Новый Nou

PEUGEOT (.../...)

306 (97>) (.../...)

1.8 D	7CA9AT, 7SA9AE, 7AA/9AT	D	1769	XUD7	M			03/98 ▸ 02/02	126440	**819752**	92		97		22X1.5	29
1.9 D	7BWJZT, 7CWJZT, 7EWJZT, 7AW/JZT	D	1868	DW8	M			11/98 ▸ 03/02	126440	**819752**	92		97		22X1.5	29
1.9 D,1.9 SD,1.9 TD	7AD/8AD/9BD/HVE/HYE/JYE JYT, 7BD/8AD/9BD/HVE/HYE JYE/JYT, 7CD/HVE/HYE/JYE 7ED/9BD/HVE/HYE/JYE/JYT 7SD/JYE/JYT	D	1905	XUD9A, XUD9TE, XUD9BSD	M			03/97 ▸ 03/02	126444	**819755**	88	92	93	97	22X1.5	29
1.9 D,1.9 TD	7ED/9BD/HYE/JYE/JYT	D	1905	XUD9A, XUD9TE	M			04/97 ▸ 03/02	126445	**819747**	92	96	97	101	22X1.5	29
1.9 D,1.9 SD	7AD/9BD/HVE/JYE/JYT, 7BD 9BD/HVE/JYE/JYT, 7CD/HVE JYE, 7ED/9BD/HVE/JYE/JYT 7SD/JYE/JYT	D	1905	XUD9BSD, XUD9A	M			03/98 ▸ 03/02	126440	**819752**	92		97		22X1.5	29

306 (97>2002)

1.9 TD	7AD/8AD/HYE, 7CDHYE 7EDHYE, 7BD/8AD/HYE	D	1905	XUD9TE	M	+/-		03/97 ▸ 03/02	133827	●**820834**			60		14X1.25	

309 (85>89)

1.1	10A/E11/E12, 10C/E11/E12/G10	E	1118	E1	M	-		09/85 ▸ 06/89	126414	**819757**	79		88		22X1.5	29
1.1	10A/E11/E12, 10C/E11/E12/G10	E	1118	E1	M	-		09/85 ▸ 06/89	126422	**819771**	92	96	97	101	22X1.5	29
1.1	10A/E11/E12, 10C/E11/E12/G10	E	1118	E1	M	-		09/85 ▸ 06/89	126417	**819770**	83	88	87	92	22X1.5	29
1.1	10A/E11/E12, 10C/E11/E12/G10	E	1118	E1	M	-		09/85 ▸ 06/89	126421	**819761**	92		97		22X1.5	29
1.1	10A/E11/E12, 10C/E11/E12/G10	E	1118	E1	M	-		09/85 ▸ 06/89	126420	**819760**	86		95		22X1.5	29
1.1	10A/E11/E12, 10C/E11/E12/G10	E	1118	E1	M	-		09/85 ▸ 06/89	126418	**819773**	88	92	93	97	22X1.5	29
1.3	10A/G12/G22, 10C/D22/G12/G27, 10S E11/E12/G11/G12	E	1294	G1A, G2S, G2, G1B	M	-		09/85 ▸ 07/89	126417	**819770**	83	88	87	92	22X1.5	29
1.3	10A/G12/G22, 10C/D22/G12/G27, 10S E11/E12/G11/G12	E	1294	G1A, G1B, G2, G2S	M	-		09/85 ▸ 07/89	126421	**819761**	92		97		22X1.5	29
1.3	10A/G12/G22, 10C/D22/G12/G27, 10S E11/E12/G11/G12	E	1294	G1A, G2S, G1B, G2	M	-		09/85 ▸ 07/89	126414	**819757**	79		88		22X1.5	29
1.3	10A/G12/G22, 10C/D22/G12/G27, 10S E11/E12/G11/G12	E	1294	G1A, G2, G2S, G1B	M	-		09/85 ▸ 07/89	126420	**819760**	86		95		22X1.5	29
1.3	10A/G12/G22, 10C/D22/G12/G27, 10S E11/E12/G11/G12	E	1294	G1A, G2, G1B, G2S	M	-		09/85 ▸ 07/89	126418	**819773**	88	92	93	97	22X1.5	29
1.3	10A/G12/G22, 10C/D22/G12/G27, 10S E11/E12/G11/G12	E	1294	G1A, G1B, G2, G2S	M	-		09/85 ▸ 07/89	126422	**819771**	92	96	97	101	22X1.5	29
1.4,1.4 i	10A/K12/K22/KD2, 10C/K12 K22/KD2	E	1360	TU3M, TU3S, TU3	M	+/-		08/88 ▸ 07/89	126421	**819761**	92		97		22X1.5	29
1.4,1.4 i	10A/K12/K22/KD2, 10C/K12 K22/KD2	E	1360	TU3M, TU3, TU3S	M	+/-		08/88 ▸ 07/89	126418	**819773**	88	92	93	97	22X1.5	29
1.4,1.4 i	10A/K12/K22/KD2, 10C/K12 K22/KD2	E	1360	TU3, TU3M, TU3S	M	+/-		08/88 ▸ 07/89	126422	**819771**	92	96	97	101	22X1.5	29
1.4,1.4 i	10A/K12/K22/KD2, 10C/K12 K22/KD2	E	1360	TU3, TU3S, TU3M	M	+/-		08/88 ▸ 07/89	126420	**819760**	86		95		22X1.5	29
1.4,1.4 i	10A/K12/K22/KD2, 10C/K12 K22/KD2	E	1360	TU3M, TU3, TU3S	M	+/-		08/88 ▸ 07/89	126414	**819757**	79		88		22X1.5	29
1.4,1.4 i	10A/K12/K22/KD2, 10C/K12 K22/KD2	E	1360	TU3, TU3M, TU3S	M	+/-		08/88 ▸ 07/89	126417	**819770**	83	88	87	92	22X1.5	29
1.5	10AY22	E	1442	Y2	M	-		08/86 ▸ 06/89	126421	**819761**	92		97		22X1.5	29
1.5	10AY22	E	1442	Y2	M	-		08/86 ▸ 06/89	126420	**819760**	86		95		22X1.5	29
1.5	10AY22	E	1442	Y2	M	-		08/86 ▸ 06/89	126417	**819770**	83	88	87	92	22X1.5	29
1.5	10AY22	E	1442	Y2	M	-		08/86 ▸ 06/89	126422	**819771**	92	96	97	101	22X1.5	29
1.5	10AY22	E	1442	Y2	M	-		08/86 ▸ 06/89	126418	**819773**	88	92	93	97	22X1.5	29
1.5	10AY22	E	1442	Y2	M	-		08/86 ▸ 06/89	126414	**819757**	79		88		22X1.5	29
1.6,1.6 i	10A/B11/B12/B22/B31/B32 B51/B62/BA2, 10C/B12/B22 B62/BA2/G22	E	1580	XU51C, XU5J1, XU5CP, XU5JA XU52C	M	+/-		09/85 ▸ 07/89	126414	**819757**	79		88		22X1.5	29
1.6,1.6 i	10A/B11/B12/B22/B31/B32 B51/B62/BA2, 10C/B12/B22 B62/BA2/G22	E	1580	XU51C, XU52C, XU5J1, XU5CP XU5JA	M	+/-		09/85 ▸ 07/89	126420	**819760**	86		95		22X1.5	29
1.6,1.6 i	10A/B11/B12/B22/B31/B32 B51/B62/BA2, 10C/B12/B22 B62/BA2/G22	E	1580	XU51C, XU5J1, XU52C, XU5JA XU5CP	M	+/-		09/85 ▸ 07/89	126417	**819770**	83	88	87	92	22X1.5	29

• **New** Nouveau **Nuevo** Novo **Nuovo** Nieuw **Neu** Yeni Новый Nou

																(°)C			
																T1	T2	T3	T4
PEUGEOT (.../...)																			
309 (85>89) (.../...)																			
1.6,1.6 i	*10A/B11/B12/B22/B31/B32 B51/B62/BA2, 10C/B12/B22 B62/BA2/G22*	E	1580	XU51C, XU5J1, XU5CP, XU52C XU5JA	M	+/-		09/85 ▸ 07/89	126422	**819771**	92	96	97	101	22X1.5	29
1.6,1.6 i	*10A/B11/B12/B22/B31/B32 B51/B62/BA2, 10C/B12/B22 B62/BA2/G22*	E	1580	XU5JA, XU51C, XU52C, XU5J1 XU5CP	M	+/-		09/85 ▸ 07/89	126418	**819773**	88	92	93	97	22X1.5	29
1.6,1.6 i	*10A/B11/B12/B22/B31/B32 B51/B62/BA2, 10C/B12/B22 B62/BA2/G22*	E	1580	XU5JA, XU5J1, XU51C, XU5CP XU52C	M	+/-		09/85 ▸ 07/89	126421	**819761**	92		97		22X1.5	29
1.6	*10A/B14/BA4, 10C/B14/BA4*	E	1580	XU51C	A	+/-		08/85 ▸ 07/89	126420	**819760**	86		95		22X1.5	29
1.6	*10A/B14/BA4, 10C/B14/BA4*	E	1580	XU51C	A	+/-		08/85 ▸ 07/89	126418	**819773**	88	92	93	97	22X1.5	29
1.6	*10A/B14/BA4, 10C/B14/BA4*	E	1580	XU51C	A	+/-		08/85 ▸ 07/89	126422	**819771**	92	96	97	101	22X1.5	29
1.6	*10A/B14/BA4, 10C/B14/BA4*	E	1580	XU51C	A	+/-		08/85 ▸ 07/89	126421	**819761**	92		97		22X1.5	29
1.6	*10A/B14/BA4, 10C/B14/BA4*	E	1580	XU51C	A	+/-		08/85 ▸ 07/89	126414	**819757**	79		88		22X1.5	29
1.6	*10A/B14/BA4, 10C/B14/BA4*	E	1580	XU51C	A	+/-		08/85 ▸ 07/89	126417	**819770**	83	88	87	92	22X1.5	29
1.6	*10AJ22*	E	1592	J2	M	-		08/86 ▸ 06/89	126414	**819757**	79		88		22X1.5	29
1.6	*10AJ22*	E	1592	J2	M	-		08/86 ▸ 06/89	126418	**819773**	88	92	93	97	22X1.5	29
1.6	*10AJ22*	E	1592	J2	M	-		08/86 ▸ 06/89	126422	**819771**	92	96	97	101	22X1.5	29
1.6	*10AJ22*	E	1592	J2	M	-		08/86 ▸ 06/89	126417	**819770**	83	88	87	92	22X1.5	29
1.6	*10AJ22*	E	1592	J2	M	-		08/86 ▸ 06/89	126421	**819761**	92		97		22X1.5	29
1.6	*10AJ22*	E	1592	J2	M	-		08/86 ▸ 06/89	126420	**819760**	86		95		22X1.5	29
1.9,1.9 i	*10A/D22/D62/DD2/DF2/DK2 10C/B62/D22/D62/DD2/DE2 DF2/DK2*	E	1905	XU9JA, XU92C, XU9M, XU9JAZ	M	+/-		09/85 ▸ 07/89	126418	**819773**	88	92	93	97	22X1.5	29
1.9,1.9 i	*10A/D22/D62/DD2/DF2/DK2 10C/B62/D22/D62/DD2/DE2 DF2/DK2*	E	1905	XU9JA, XU9JAZ, XU92C, XU9M	M	+/-		09/85 ▸ 07/89	126417	**819770**	83	88	87	92	22X1.5	29
1.9,1.9 i	*10A/D22/D62/DD2/DF2/DK2 10C/B62/D22/D62/DD2/DE2 DF2/DK2*	E	1905	XU9JA, XU9M, XU92C, XU9JAZ	M	+/-		09/85 ▸ 07/89	126422	**819771**	92	96	97	101	22X1.5	29
1.9,1.9 i	*10A/D22/D62/DD2/DF2/DK2 10C/B62/D22/D62/DD2/DE2 DF2/DK2*	E	1905	XU9JA, XU9M, XU92C, XU9JAZ	M	+/-		09/85 ▸ 07/89	126420	**819760**	86		95		22X1.5	29
1.9,1.9 i	*10A/D22/D62/DD2/DF2/DK2 10C/B62/D22/D62/DD2/DE2 DF2/DK2*	E	1905	XU9JAZ, XU9JA, XU92C, XU9M	M	+/-		09/85 ▸ 07/89	126414	**819757**	79		88		22X1.5	29
1.9,1.9 i	*10A/D22/D62/DD2/DF2/DK2 10C/B62/D22/D62/DD2/DE2 DF2/DK2*	E	1905	XU9JA, XU9M, XU9JAZ, XU92C	M	+/-		09/85 ▸ 07/89	126421	**819761**	92		97		22X1.5	29
1.9 i	*10CDF4, 10A/D64/DF4*	E	1905	XU9JA	A	+/-		08/88 ▸ 07/89	126420	**819760**	86		95		22X1.5	29
1.9 i	*10CDF4, 10A/D64/DF4*	E	1905	XU9JA	A	+/-		08/88 ▸ 07/89	126418	**819773**	88	92	93	97	22X1.5	29
1.9 i	*10CDF4, 10A/D64/DF4*	E	1905	XU9JA	A	+/-		08/88 ▸ 07/89	126422	**819771**	92	96	97	101	22X1.5	29
1.9 i	*10CDF4, 10A/D64/DF4*	E	1905	XU9JA	A	+/-		08/88 ▸ 07/89	126421	**819761**	92		97		22X1.5	29
1.9 i	*10CDF4, 10A/D64/DF4*	E	1905	XU9JA	A	+/-		08/88 ▸ 07/89	126414	**819757**	79		88		22X1.5	29
1.9 i	*10CDF4, 10A/D64/DF4*	E	1905	XU9JA	A	+/-		08/88 ▸ 07/89	126417	**819770**	83	88	87	92	22X1.5	29
1.7 D	*10CA92, 10SA92, 10A/A92*	D	1769	XUD7	M	+/-		08/86 ▸ 06/89	126422	**819771**	92	96	97	101	22X1.5	29
1.7 D	*10CA92, 10SA92, 10A/A92*	D	1769	XUD7	M	+/-		08/86 ▸ 06/89	126417	**819770**	83	88	87	92	22X1.5	29
1.7 D	*10CA92, 10SA92, 10A/A92*	D	1769	XUD7	M	+/-		08/86 ▸ 06/89	126421	**819761**	92		97		22X1.5	29
1.7 D	*10CA92, 10SA92, 10A/A92*	D	1769	XUD7	M	+/-		08/86 ▸ 06/89	126420	**819760**	86		95		22X1.5	29
1.7 D	*10CA92, 10SA92, 10A/A92*	D	1769	XUD7	M	+/-		08/86 ▸ 06/89	126414	**819757**	79		88		22X1.5	29
1.7 D	*10CA92, 10SA92, 10A/A92*	D	1769	XUD7	M	+/-		08/86 ▸ 06/89	126418	**819773**	88	92	93	97	22X1.5	29
1.9 D	*10A/D92/DJ2, 10SD92, 10C/D92/DJ2*	D	1905	XUD9	M	+/-		08/86 ▸ 07/89	126414	**819757**	79		88		22X1.5	29
1.9 D	*10A/D92/DJ2, 10SD92, 10C/D92/DJ2*	D	1905	XUD9	M	+/-		08/86 ▸ 07/89	126417	**819770**	83	88	87	92	22X1.5	29
1.9 D	*10A/D92/DJ2, 10SD92, 10C/D92/DJ2*	D	1905	XUD9	M	+/-		08/86 ▸ 07/89	126418	**819773**	88	92	93	97	22X1.5	29
1.9 D	*10A/D92/DJ2, 10SD92, 10C/D92/DJ2*	D	1905	XUD9	M	+/-		08/86 ▸ 07/89	126422	**819771**	92	96	97	101	22X1.5	29
1.9 D	*10A/D92/DJ2, 10SD92, 10C/D92/DJ2*	D	1905	XUD9	M	+/-		08/86 ▸ 07/89	126420	**819760**	86		95		22X1.5	29
1.9 D	*10A/D92/DJ2, 10SD92, 10C/D92/DJ2*	D	1905	XUD9	M	+/-		08/86 ▸ 07/89	126421	**819761**	92		97		22X1.5	29
309 (89>94)																			
1.1	*3CB2A2, 3CE1A2, 3SE1A2, 3AE/1A2*	E	1118	E1	M	-		07/89 ▸ 07/92	126417	**819770**	83	88	87	92	22X1.5	29
1.1	*3CB2A2, 3CE1A2, 3SE1A2, 3AE/1A2*	E	1118	E1	M	-		07/89 ▸ 07/92	126414	**819757**	79		88		22X1.5	29
1.1	*3CB2A2, 3CE1A2, 3AE/1A2*	E	1118	E1	M	-		07/89 ▸ 03/90	126418	**819773**	88	92	93	97	22X1.5	29
1.1	*3CB2A2, 3CE1A2, 3AE/1A2*	E	1118	E1	M	-		07/89 ▸ 03/90	126422	**819771**	92	96	97	101	22X1.5	29
1.1	*3CB2A2, 3CE1A2, 3AE/1A2*	E	1118	E1	M	-		07/89 ▸ 03/90	126421	**819761**	92		97		22X1.5	29

• **New** Nouveau **Nuevo** Novo **Nuovo** Nieuw **Neu** Yeni Новый Nou

Valeo

Thermoswitch
Thermocontact
Termocontacto
Termocontato
Termocontatto
Thermokontakt
Thermoschalter

Włącznik wentylatora
Tepelný spínač
Termokapcsoló
Termocontact
Fan müşiri
ТЕРМОДАТЧИК

			Type Ctr.		cc			AC			OE	Valeo	(°)C T1	T2	T3	T4	COD.	mm	
PEUGEOT (.../...)																				
309 (89>94) (.../...)																				
1.1	*3CB2A2, 3CE1A2, 3AE/1A2*	E		1118	E1	M	-		07/89 ▸ 03/90	126420	**819760**	86		95		22X1.5	29	
1.1	*3CB2A2, 3CE1A2, 3SE1A2, 3AE/1A2*	E		1118	E1	M	-		03/90 ▸ 07/92	126423	**819751**	86		95		22X1.5	29	
1.1	*3CB2A2, 3CE1A2, 3SE1A2, 3AE/1A2*	E		1118	E1	M	-		03/90 ▸ 07/92	126440	**819752**	92		97		22X1.5	29	
1.1	*3CB2A2, 3CE1A2, 3SE1A2, 3AE/1A2*	E		1118	E1	M	-		03/90 ▸ 07/92	126444	**819755**	88	92	93	97	22X1.5	29	
1.1,1.1 i	*3AH/1A1/1A2/DZ2, 3CH/1A1 1A2/DZ2, 3SH/1A1/1A2*	E		1124	TU1M, TU1	M	+/-		08/89 ▸ 08/93	126417	**819770**	83	88	87	92	22X1.5	29	
1.1	*3AH1A2, 3CH1A2*	E		1124	TU1	M	+/-		08/89 ▸ 03/90	126421	**819761**	92		97		22X1.5	29	
1.1	*3AH1A2, 3CH1A2*	E		1124	TU1	M	+/-		08/89 ▸ 03/90	126418	**819773**	88	92	93	97	22X1.5	29	
1.1	*3AH1A2, 3CH1A2*	E		1124	TU1	M	+/-		08/89 ▸ 03/90	126422	**819771**	92	96	97	101	22X1.5	29	
1.1	*3AH1A2, 3CH1A2*	E		1124	TU1	M	+/-		08/89 ▸ 03/90	126420	**819760**	86		95		22X1.5	29	
1.1,1.1 i	*3AH/1A1/1A2/DZ2, 3CH/1A1 1A2/DZ2, 3SH/1A1/1A2*	E		1124	TU1, TU1M	M	+/-		03/90 ▸ 08/93	126440	**819752**	92		97		22X1.5	29	
1.1,1.1 i	*3AH/1A1/1A2/DZ2, 3CH/1A1 1A2/DZ2, 3SH/1A1/1A2*	E		1124	TU1, TU1M	M	+/-		03/90 ▸ 08/93	126423	**819751**	86		95		22X1.5	29	
1.1,1.1 i	*3AH/1A1/1A2/DZ2, 3CH/1A1 1A2/DZ2, 3SH/1A1/1A2*	E		1124	TU1M, TU1	M	+		03/90 ▸ 08/93	126445	**819747**	92	96	97	101	22X1.5	29	
1.1,1.1 i	*3AH/1A1/1A2/DZ2, 3CH/1A1 1A2/DZ2, 3SH/1A1/1A2*	E		1124	TU1M, TU1	M	-		03/90 ▸ 08/93	126444	**819755**	88	92	93	97	22X1.5	29	
1.1,1.1 i	*3AH/1A1/1A2/DZ2, 3CH/1A1 1A2/DZ2, 3SH/1A1/1A2*	E		1124	TU1, TU1M	M			08/89 ▸ 08/93	126414	**819757**	79		88		22X1.5	29	
1.3	*3AG1A2*	E		1294	G1A	M	-		08/89 ▸ 03/90	126420	**819760**	86		95		22X1.5	29	
1.3	*3AG1A2*	E		1294	G1A	M	-		08/89 ▸ 03/90	126421	**819761**	92		97		22X1.5	29	
1.3	*3AG1A2*	E		1294	G1A	M	-		08/89 ▸ 03/90	126422	**819771**	92	96	97	101	22X1.5	29	
1.3	*3AG1A2*	E		1294	G1A	M	-		08/89 ▸ 03/90	126418	**819773**	88	92	93	97	22X1.5	29	
1.3	*3CG1A2, 3SG1A2, 3AG/1A2*	E		1294	G1A	M	-		08/89 ▸ 07/92	126414	**819757**	79		88		22X1.5	29	
1.3	*3CG1A2, 3SG1A2, 3AG/1A2*	E		1294	G1A	M	-		08/89 ▸ 07/92	126417	**819770**	83	88	87	92	22X1.5	29	
1.3	*3CG1A2, 3SG1A2, 3AG/1A2*	E		1294	G1A	M	-		03/90 ▸ 07/92	126423	**819751**	86		95		22X1.5	29	
1.3	*3CG1A2, 3SG1A2, 3AG/1A2*	E		1294	G1A	M	-		03/90 ▸ 07/92	126444	**819755**	88	92	93	97	22X1.5	29	
1.3	*3CG1A2, 3SG1A2, 3AG/1A2*	E		1294	G1A	M	-		03/90 ▸ 07/92	126440	**819752**	92		97		22X1.5	29	
1.4,1.4 i	*3AK/1D2/1G2/2B2/2D2/3A1 3AZ/DY2/DZ2, 3SK1G2, 3CK 1D2/1G2/2B2/2D2/DY2/DZ2*	E		1360	TU3A, TU3, TU3M, TU3F2, TU3S	M	+/-		08/89 ▸ 08/94	126417	**819770**	83	88	87	92	22X1.5	29	
1.4,1.4 i	*3AK/1D2/1G2/2B2/2D2/3AZ DZ2, 3SK1G2, 3CK/1D2/1G2 2B2/2D2/DZ2*	E		1360	TU3A, TU3F2, TU3M, TU3, TU3S	M	+/-		08/89 ▸ 03/90	126421	**819761**	92		97		22X1.5	29	
1.4,1.4 i	*3AK/1D2/1G2/2B2/2D2/3A1 3AZ/DY2/DZ2, 3SK1G2, 3CK 1D2/1G2/2B2/2D2/DY2/DZ2*	E		1360	TU3F2, TU3M, TU3A, TU3, TU3S	M	+/-		08/89 ▸ 08/94	126414	**819757**	79		88		22X1.5	29	
1.4,1.4 i	*3AK/1D2/1G2/2B2/2D2/3AZ DZ2, 3SK1G2, 3CK/1D2/1G2 2B2/2D2/DZ2*	E		1360	TU3F2, TU3M, TU3A, TU3S, TU3	M	+/-		08/89 ▸ 03/90	126418	**819773**	88	92	93	97	22X1.5	29	
1.4,1.4 i	*3AK/1D2/1G2/2B2/2D2/3AZ DZ2, 3SK1G2, 3CK/1D2/1G2 2B2/2D2/DZ2*	E		1360	TU3M, TU3A, TU3F2, TU3S, TU3	M	+/-		08/89 ▸ 03/90	126422	**819771**	92	96	97	101	22X1.5	29	
1.4,1.4 i	*3AK/1D2/1G2/2B2/2D2/3AZ DZ2, 3SK1G2, 3CK/1D2/1G2 2B2/2D2/DZ2*	E		1360	TU3, TU3F2, TU3S, TU3A, TU3M	M	+/-		08/89 ▸ 03/90	126420	**819760**	86		95		22X1.5	29	
1.4,1.4 i	*3AK/1D2/1G2/2B2/2D2/3A1 3AZ/DY2/DZ2, 3SK1G2, 3CK 1D2/1G2/2B2/2D2/DY2/DZ2*	E		1360	TU3A, TU3M, TU3F2, TU3, TU3S	M	+/-		03/90 ▸ 08/94	126423	**819751**	86		95		22X1.5	29	
1.4,1.4 i	*3AK/1D2/1G2/2B2/2D2/3A1 3AZ/DY2/DZ2, 3SK1G2, 3CK 1D2/1G2/2B2/2D2/DY2/DZ2*	E		1360	TU3M, TU3F2, TU3A, TU3, TU3S	M	+/-		03/90 ▸ 08/94	126440	**819752**	92		97		22X1.5	29	
1.4,1.4 i	*3AK/1D2/1G2/2B2/2D2/3A1 3AZ/DY2/DZ2, 3SK1G2, 3CK 1D2/1G2/2B2/2D2/DY2/DZ2*	E		1360	TU3F2, TU3A, TU3M, TU3, TU3S	M	+		03/90 ▸ 08/94	126445	**819747**	92	96	97	101	22X1.5	29	
1.4,1.4 i	*3AK/1D2/1G2/2B2/2D2/3A1 3AZ/DY2/DZ2, 3SK1G2, 3CK 1D2/1G2/2B2/2D2/DY2/DZ2*	E		1360	TU3A, TU3M, TU3F2, TU3, TU3S	M	-		03/90 ▸ 08/94	126444	**819755**	88	92	93	97	22X1.5	29	
1.5	*3AY2A2*	E		1442	Y2	M	-		08/89 ▸ 03/90	126420	**819760**	86		95		22X1.5	29	
1.5	*3AY2A2*	E		1442	Y2	M	-		08/89 ▸ 03/90	126421	**819761**	92		97		22X1.5	29	
1.5	*3AY2A2*	E		1442	Y2	M	-		08/89 ▸ 03/90	126422	**819771**	92	96	97	101	22X1.5	29	
1.5	*3AY2A2*	E		1442	Y2	M	-		08/89 ▸ 03/90	126418	**819773**	88	92	93	97	22X1.5	29	
1.5	*3AY2A2*	E		1442	Y2	M	-		08/89 ▸ 07/92	126414	**819757**	79		88		22X1.5	29	

• **New** Nouveau **Nuevo** Novo **Nuovo** Nieuw **Neu** Yeni Новый Nou

PEUGEOT (.../...)

309 (89>94) (.../...)

1.5	3AY2A2	E	1442	Y2	M	-		08/89 ▸ 07/92	126417	**819770**	83	88	87	92	22X1.5	29
1.5	3AY2A2	E	1442	Y2	M	-		03/90 ▸ 07/92	126440	**819752**	92		97		22X1.5	29
1.5	3AY2A2	E	1442	Y2	M	-		03/90 ▸ 07/92	126423	**819751**	86		95		22X1.5	29
1.5	3AY2A2	E	1442	Y2	M	-		08/90 ▸ 07/92	126444	**819755**	88	92	93	97	22X1.5	29
1.6,1.6 i	3CBDY2, 3AB/2B2/6D2/6E2 DY2	E	1580	XU5M, XU52C, XU5JA	M	+/-		08/89 ▸ 03/90	126418	**819773**	88	92	93	97	22X1.5	29
1.6,1.6 i	3AB/2B2/5A2/6D2/6E2/DY2 DZ2, 3CB/2B2/DY2/DZ2	E	1580	XU52C, XU5M, XU5JA	M	+/-		08/89 ▸ 08/93	126414	**819757**	79		88		22X1.5	29
1.6,1.6 i	3AB/2B2/5A2/6D2/6E2/DY2 DZ2, 3CB/2B2/DY2/DZ2	E	1580	XU52C, XU5M, XU5JA	M	+/-		08/89 ▸ 08/93	126417	**819770**	83	88	87	92	22X1.5	29
1.6,1.6 i	3CBDY2, 3AB/2B2/6D2/6E2 DY2	E	1580	XU5JA, XU52C, XU5M	M	+/-		08/89 ▸ 03/90	126421	**819761**	92		97		22X1.5	29
1.6,1.6 i	3CBDY2, 3AB/2B2/6D2/6E2 DY2	E	1580	XU5M, XU52C, XU5JA	M	+/-		08/89 ▸ 03/90	126420	**819760**	86		95		22X1.5	29
1.6,1.6 i	3CBDY2, 3AB/2B2/6D2/6E2 DY2	E	1580	XU5M, XU52C, XU5JA	M	+/-		08/89 ▸ 03/90	126422	**819771**	92	96	97	101	22X1.5	29
1.6,1.6 i	3AB/2B2/5A2/6D2/6E2/DY2 DZ2, 3CB/2B2/DY2/DZ2	E	1580	XU5M, XU52C, XU5JA	M	+/-		03/90 ▸ 08/93	126423	**819751**	86		95		22X1.5	29
1.6,1.6 i	3AB/2B2/5A2/6D2/6E2/DY2 DZ2, 3CB/2B2/DY2/DZ2	E	1580	XU5M, XU52C, XU5JA	M	+/-		03/90 ▸ 08/93	126440	**819752**	92		97		22X1.5	29
1.6,1.6 i	3AB/2B2/5A2/6D2/6E2/DY2 DZ2, 3CB/2B2/DY2/DZ2	E	1580	XU5M, XU5JA, XU52C	M	+		03/90 ▸ 08/93	126445	**819747**	92	96	97	101	22X1.5	29
1.6,1.6 i	3AB/2B2/5A2/6D2/6E2/DY2 DZ2, 3CB/2B2/DY2/DZ2	E	1580	XU52C, XU5M, XU5JA	M	-		03/90 ▸ 08/93	126444	**819755**	88	92	93	97	22X1.5	29
1.6,1.6 i	3AB/2B4/DY4, 3CB/2A4/2B4 DY4	E	1580	XU52C, XU5M	A	+/-		08/89 ▸ 08/93	126417	**819770**	83	88	87	92	22X1.5	29
1.6,1.6 i	3AB/2B4/DY4, 3CB/2A4/2B4 DY4	E	1580	XU52C, XU5M	A	+/-		08/89 ▸ 08/93	126414	**819757**	79		88		22X1.5	29
1.6	3AB2B4, 3CB2A4	E	1580	XU52C	A	+/-		08/89 ▸ 03/90	126418	**819773**	88	92	93	97	22X1.5	29
1.6	3AB2B4, 3CB2A4	E	1580	XU52C	A	+/-		08/89 ▸ 03/90	126422	**819771**	92	96	97	101	22X1.5	29
1.6	3AB2B4, 3CB2A4	E	1580	XU52C	A	+/-		08/89 ▸ 03/90	126421	**819761**	92		97		22X1.5	29
1.6	3AB2B4, 3CB2A4	E	1580	XU52C	A	+/-		08/89 ▸ 03/90	126420	**819760**	86		95		22X1.5	29
1.6,1.6 i	3AB/2B4/DY4, 3CB/2A4/2B4 DY4	E	1580	XU52C, XU5M	A	+/-		03/90 ▸ 08/93	126440	**819752**	92		97		22X1.5	29
1.6,1.6 i	3AB/2B4/DY4, 3CB/2A4/2B4 DY4	E	1580	XU52C, XU5M	A	+/-		03/90 ▸ 08/93	126423	**819751**	86		95		22X1.5	29
1.6,1.6 i	3AB/2B4/DY4, 3CB/2A4/2B4 DY4	E	1580	XU52C, XU5M	A	+		03/90 ▸ 08/93	126445	**819747**	92	96	97	101	22X1.5	29
1.6,1.6 i	3AB/2B4/DY4, 3CB/2A4/2B4 DY4	E	1580	XU52C, XU5M	A	-		03/90 ▸ 08/93	126444	**819755**	88	92	93	97	22X1.5	29
1.6	3AJ2A2	E	1592	J2	M	+/-		08/89 ▸ 07/92	126417	**819770**	83	88	87	92	22X1.5	29
1.6	3AJ2A2	E	1592	J2	M	+/-		03/90 ▸ 07/92	126423	**819751**	86		95		22X1.5	29
1.6	3AJ2A2	E	1592	J2	M	-		08/89 ▸ 03/90	126420	**819760**	86		95		22X1.5	29
1.6	3AJ2A2	E	1592	J2	M	-		08/89 ▸ 03/90	126421	**819761**	92		97		22X1.5	29
1.6	3AJ2A2	E	1592	J2	M	-		08/89 ▸ 03/90	126422	**819771**	92	96	97	101	22X1.5	29
1.6	3AJ2A2	E	1592	J2	M	-		08/89 ▸ 03/90	126418	**819773**	88	92	93	97	22X1.5	29
1.6	3AJ2A2	E	1592	J2	M	-		08/89 ▸ 07/92	126414	**819757**	79		88		22X1.5	29
1.6	3AJ2A2	E	1592	J2	M	-		03/90 ▸ 07/92	126440	**819752**	92		97		22X1.5	29
1.6	3AJ2A2	E	1592	J2	M	-		03/90 ▸ 07/92	126444	**819755**	88	92	93	97	22X1.5	29
1.9,1.9 i,1.9 i 16V	3AD/2A2/6B2/DZ2, 3CD/2A2 2H2/6B2/6C2/DZ2	E	1905	XU92C, XU9M, XU9JA, XU9J4	M	+/-		08/89 ▸ 03/90	126418	**819773**	88	92	93	97	22X1.5	29
1.9,1.9 i,1.9 i 16V	3AD/2A2/6B2/DZ2, 3CD/2A2 2H2/6B2/6C2/DZ2	E	1905	XU9M, XU9JA, XU92C, XU9J4	M	+/-		08/89 ▸ 03/90	126422	**819771**	92	96	97	101	22X1.5	29
1.9,1.9 i,1.9 i 16V	3AD/2A2/6B2/DZ2, 3CD/2A2 2H2/6B2/6C2/DZ2	E	1905	XU9M, XU92C, XU9JA, XU9J4	M	+/-		08/89 ▸ 03/90	126420	**819760**	86		95		22X1.5	29
1.9,1.9 i,1.9 i 16V	3AD/2A2/2H2/6B2/DZ2/KZ2 3CD/2A2/2H2/6B2/6C2/DZ2 FW2/KZ2	E	1905	XU9JAZ, XU92C, XU9JA, XU9M XU9J4	M	+/-		08/89 ▸ 08/93	126417	**819770**	83	88	87	92	22X1.5	29
1.9,1.9 i,1.9 i 16V	3AD/2H2/6B2/DZ2/KZ2, 3CD 2A2/2H2/6B2/6C2/DZ2/FW2 KZ2	E	1905	XU9JA, XU9M, XU9J4, XU92C XU9JAZ	M	+/-		08/89 ▸ 08/93	126414	**819757**	79		88		22X1.5	29
1.9,1.9 i,1.9 i 16V	3AD/2A2/6B2/DZ2, 3CD/2A2 2H2/6B2/6C2/DZ2	E	1905	XU9JA, XU9M, XU92C, XU9J4	M	+/-		08/89 ▸ 03/90	126421	**819761**	92		97		22X1.5	29

• **New** Nouveau **Nuevo** Novo **Nuovo** Nieuw **Neu** Yeni Новый Nou

			Type Ctr.		cc		AC			OE	Valeo	(°)C T1	T2	T3	T4	COD.	mm	
PEUGEOT (.../...)																			
309 (89>94) (.../...)																			
1.9,1.9 i,1.9 i 16V	*3AD/2A2/2H2/6B2/DZ2/KZ2 3CD/2A2/2H2/6B2/6C2/DZ2 FW2/KZ2*	E	1905	XU9M, XU9J4, XU9JA, XU9JAZ XU92C	M	+/-		03/90 ▸ 08/93	126440	**819752**	92		97		22X1.5	29	
1.9,1.9 i,1.9 i 16V	*3AD/2A2/2H2/6B2/DZ2/KZ2 3CD/2A2/2H2/6B2/6C2/DZ2 FW2/KZ2*	E	1905	XU9JAZ, XU92C, XU9JA, XU9M XU9J4	M	+/-		03/90 ▸ 08/93	126423	**819751**	86		95		22X1.5	29	
1.9,1.9 i,1.9 i 16V	*3AD/2A2/2H2/6B2/DZ2/KZ2 3CD/2A2/2H2/6B2/6C2/DZ2 FW2/KZ2*	E	1905	XU9JA, XU9M, XU92C, XU9J4 XU9JAZ	M	+/-		03/90 ▸ 08/93	126445	**819747**	92	96	97	101	22X1.5	29	
1.9,1.9 i,1.9 i 16V	*3AD/2A2/2H2/6B2/DZ2/KZ2 3CD/2A2/2H2/6B2/6C2/DZ2 FW2/KZ2*	E	1905	XU92C, XU9M, XU9J4, XU9JA XU9JAZ	M	-		03/90 ▸ 08/93	126444	**819755**	88	92	93	97	22X1.5	29	
1.9 i	*3AD/FZ4/KZ4, 3CD/FZ4/KZ4*	E	1905	XU9JAZ, XU9J1	A	+/-		08/90 ▸ 08/93	126414	**819757**	79		88		22X1.5	29	
1.9 i	*3AD/FZ4/KZ4, 3CD/FZ4/KZ4*	E	1905	XU9JAZ, XU9J1	A	+/-		08/90 ▸ 08/93	126440	**819752**	92		97		22X1.5	29	
1.9 i	*3AD/FZ4/KZ4, 3CD/FZ4/KZ4*	E	1905	XU9J1, XU9JAZ	A	+/-		08/90 ▸ 08/93	126417	**819770**	83	88	87	92	22X1.5	29	
1.9 i	*3AD/FZ4/KZ4, 3CD/FZ4/KZ4*	E	1905	XU9J1, XU9JAZ	A	+/-		08/90 ▸ 08/93	126423	**819751**	86		95		22X1.5	29	
1.9 i	*3AD/FZ4/KZ4, 3CD/FZ4/KZ4*	E	1905	XU9JAZ, XU9J1	A	+		08/90 ▸ 08/93	126445	**819747**	92	96	97	101	22X1.5	29	
1.9 i	*3AD/FZ4, 3CD/FZ4/KZ4*	E	1905	XU9JAZ, XU9J1	A	-		08/90 ▸ 08/93	126444	**819755**	88	92	93	97	22X1.5	29	
1.7 D,1.7 TD	*3AA/8B2/9A2/9A9, 3SA9A2 3CA/8B2/9A2/9A9*	D	1769	XUD7, XUD7T	M	+/-		08/89 ▸ 08/94	126414	**819757**	79		88		22X1.5	29	
1.7 D,1.7 TD	*3AA/8B2/9A2/9A9, 3SA9A2 3CA/8B2/9A2/9A9*	D	1769	XUD7, XUD7T	M	+/-		08/89 ▸ 03/90	126422	**819771**	92	96	97	101	22X1.5	29	
1.7 D,1.7 TD	*3AA/8B2/9A2/9A9, 3SA9A2 3CA/8B2/9A2/9A9*	D	1769	XUD7, XUD7T	M	+/-		08/89 ▸ 03/90	126421	**819761**	92		97		22X1.5	29	
1.7 D,1.7 TD	*3AA/8B2/9A2/9A9, 3SA9A2 3CA/8B2/9A2/9A9*	D	1769	XUD7T, XUD7	M	+/-		08/89 ▸ 03/90	126420	**819760**	86		95		22X1.5	29	
1.7 D,1.7 TD	*3AA/8B2/9A2/9A9, 3SA9A2 3CA/8B2/9A2/9A9*	D	1769	XUD7T, XUD7	M	+/-		08/89 ▸ 03/90	126418	**819773**	88	92	93	97	22X1.5	29	
1.7 D,1.7 TD	*3AA/8B2/9A2/9A9, 3SA9A2 3CA/8B2/9A2/9A9*	D	1769	XUD7T, XUD7	M	+/-		08/89 ▸ 08/94	126417	**819770**	83	88	87	92	22X1.5	29	
1.7 D,1.7 TD	*3AA/8B2/9A2/9A9, 3SA9A2 3CA/8B2/9A2/9A9*	D	1769	XUD7, XUD7T	M	+/-		03/90 ▸ 08/94	126440	**819752**	92		97		22X1.5	29	
1.7 D,1.7 TD	*3AA/8B2/9A2/9A9, 3SA9A2 3CA/8B2/9A2/9A9*	D	1769	XUD7T, XUD7	M	+/-		03/90 ▸ 08/94	126423	**819751**	86		95		22X1.5	29	
1.7 D,1.7 TD	*3AA/8B2/9A2/9A9, 3SA9A2 3CA/8B2/9A2/9A9*	D	1769	XUD7, XUD7T	M	+		03/90 ▸ 08/94	126445	**819747**	92	96	97	101	22X1.5	29	
1.7 D,1.7 TD	*3AA/8B2/9A2/9A9, 3SA9A2 3CA/8B2/9A2/9A9*	D	1769	XUD7, XUD7T	M	-		03/90 ▸ 08/94	126444	**819755**	88	92	93	97	22X1.5	29	
1.9 D	*3CD9A2, 3SD9A2, 3AD/9A2*	D	1905	XUD9	M	+/-		08/89 ▸ 03/90	126422	**819771**	92	96	97	101	22X1.5	29	
1.9 D	*3AD/9A2/JZ2, 3SD9A2, 3CD/9A2/JZ2*	D	1905	XUD9	M	+/-		08/89 ▸ 08/93	126417	**819770**	83	88	87	92	22X1.5	29	
1.9 D	*3AD/9A2/JZ2, 3SD9A2, 3CD/9A2/JZ2*	D	1905	XUD9	M	+/-		08/89 ▸ 08/93	126414	**819757**	79		88		22X1.5	29	
1.9 D	*3CD9A2, 3SD9A2, 3AD/9A2*	D	1905	XUD9	M	+/-		08/89 ▸ 03/90	126420	**819760**	86		95		22X1.5	29	
1.9 D	*3CD9A2, 3SD9A2, 3AD/9A2*	D	1905	XUD9	M	+/-		08/89 ▸ 03/90	126421	**819761**	92		97		22X1.5	29	
1.9 D	*3CD9A2, 3SD9A2, 3AD/9A2*	D	1905	XUD9	M	+/-		08/89 ▸ 03/90	126418	**819773**	88	92	93	97	22X1.5	29	
1.9 D	*3AD/9A2/JZ2, 3SD9A2, 3CD/9A2/JZ2*	D	1905	XUD9	M	+/-		03/90 ▸ 08/93	126440	**819752**	92		97		22X1.5	29	
1.9 D	*3AD/9A2/JZ2, 3SD9A2, 3CD/9A2/JZ2*	D	1905	XUD9	M	+/-		03/90 ▸ 08/93	126423	**819751**	86		95		22X1.5	29	
1.9 D	*3AD/9A2/JZ2, 3SD9A2, 3CD/9A2/JZ2*	D	1905	XUD9	M	+		03/90 ▸ 08/93	126445	**819747**	92	96	97	101	22X1.5	29	
1.9 D	*3AD/9A2/JZ2, 3SD9A2, 3CD/9A2/JZ2*	D	1905	XUD9	M	-		03/90 ▸ 08/93	126444	**819755**	88	92	93	97	22X1.5	29	
404																			
1.5	*U6, U8*	E	1468	XB2, XB5	M			06/62 ▸ 07/70	024212	**819758**	68		82		22X1.5	29	
1.6,1.6 i	*U6A*	E	1618	XC5, KF2	M			09/62 ▸ 05/70	024212	**819758**	68		82		22X1.5	29	
1.6		E	1618	XC5, XC6-C, XC7	A			09/60 ▸ 03/75	024212	**819758**	68		82		22X1.5	29	
1.8	*U6S*	E	1796	XMU6S	M			01/70 ▸ 10/70	024212	**819758**	68		82		22X1.5	29	
1.8 D	*U6D*	D	1816	XD85	M			06/62 ▸ 06/63	024212	**819758**	68		82		22X1.5	29	
1.9 D	*U6D, U7D, U8D, U10*	D	1948	XD88	M			07/63 ▸ 1977	024212	**819758**	68		82		22X1.5	29	
2.0 D	*UXD*	D	1984	XDP88	M			09/72 ▸ 05/79	024212	**819758**	68		82		22X1.5	29	
405 (87>92)																			
1.4 GPL	*15BK11*	G	1360	TU3-G	M	+		1990 ▸ 06/91	126445	**819747**	92	96	97	101	22X1.5	29	
8921218 ▸																			
1.4 GPL	*15BK11*	G	1360	TU3-G	M	-		06/87 ▸ 06/91	126444	**819755**	88	92	93	97	22X1.5	29	
1.4 GPL	*15BK11*	G	1360	TU3-G	M			06/87 ▸ 03/90	126423	**819751**	86		95		22X1.5	29	
1.4 GPL	*15BK11*	G	1360	TU3-G	M			06/87 ▸ 03/90	126421	**819761**	92		97		22X1.5	29	

• **New** Nouveau **Nuevo** Novo **Nuovo** Nieuw **Neu** Yeni Новый Nou

PEUGEOT (.../...)

405 (87>92) (.../...)

1.4 GPL	*15BK11*	G	1360	TU3-G	M			06/87 ▸ 06/91	126418	**819773**	88	92	93	97	22X1.5	29
1.4 GPL	*15BK11*	G	1360	TU3-G	M			04/90 ▸ 06/91	126440	**819752**	92		97		22X1.5	29
1.4 GPL	*15BK11*	G	1360	TU3-G	M			06/87 ▸ 1990	126422	**819771**	92	96	97	101	22X1.5	29
▸ 8921217																		
1.4	*15B/K11/K12/K21/K22/K31/K32*	E	1360	TU3.2, TU3A	M	+		06/90 ▸ 06/92	126445	**819747**	92	96	97	101	22X1.5	29
8921218 ▸																		
1.4	*15B/K11/K12/K21/K22/K31/K32*	E	1360	TU3A, TU3.2, TU3, TU3&3A	M	-		06/87 ▸ 06/92	126444	**819755**	88	92	93	97	22X1.5	29
1.4	*15B/K11/K12/K21/K22/K31/K32*	E	1360	TU3&3A, TU3A, TU3, TU3.2	M			06/87 ▸ 06/92	126423	**819751**	86		95		22X1.5	29
1.4	*15B/K11/K12/K21/K22/K31/K32*	E	1360	TU3A, TU3, TU3.2, TU3&3A	M			06/87 ▸ 06/92	126418	**819773**	88	92	93	97	22X1.5	29
1.4	*15B/K11/K12/K31/K32*	E	1360	TU3, TU3&3A, TU3A	M			06/87 ▸ 03/90	126421	**819761**	92		97		22X1.5	29
1.4	*15B/K11/K12/K21/K22/K31/K32*	E	1360	TU3A, TU3.2, TU3, TU3&3A	M			06/89 ▸ 06/92	126440	**819752**	92		97		22X1.5	29
1.4	*15B/K11/K12/K31/K32*	E	1360	TU3, TU3&3A, TU3A	M			06/87 ▸ 05/90	126422	**819771**	92	96	97	101	22X1.5	29
▸ 8921217																		
1.6,1.6 i	*15B/B12/B22/B52/BD2*	E	1580	XU52C, XU5M, XU51C	M	+		▸ 06/92	126445	**819747**	92	96	97	101	22X1.5	29
8921218 ▸	*15SB22, 15E/B12/B22/B32 B52/BD2*																	
1.6,1.6 i	*15B/8A2/B12/B22/B32/B52 BD2, 15SB22, 15E/B12/B22 B32/B52/BD2*	E	1580	XU51C, XU52C, XU5M, XU5CP	M	-		06/87 ▸ 06/92	126444	**819755**	88	92	93	97	22X1.5	29
1.6	*15B/8A2/B12/B22/B32/B52, 15SB22 15E/B12/B22/B32/B52*	E	1580	XU52C, XU51C, XU5CP	M			06/87 ▸ 03/90	126423	**819751**	86		95		22X1.5	29
1.6,1.6 i	*15B/8A2/B12/B22/B32/B52 BD2, 15SB22, 15E/B12/B22 B32/B52/BD2*	E	1580	XU51C, XU52C, XU5M, XU5CP	M			06/87 ▸ 06/92	126418	**819773**	88	92	93	97	22X1.5	29
1.6	*15B/8A2/B12/B22/B32/B52, 15SB22 15E/B12/B22/B32/B52*	E	1580	XU51C, XU52C, XU5CP	M			06/87 ▸ 03/90	126421	**819761**	92		97		22X1.5	29
1.6,1.6 i	*15B/B12/B22/B52/BD2 15SB22, 15E/B12/B22/B32 B52/BD2*	E	1580	XU5M, XU51C, XU52C	M			04/90 ▸ 06/92	126440	**819752**	92		97		22X1.5	29
1.6,1.6 i	*15B/B24/BD4, 15E/B24/BD4*	E	1580	XU52C, XU5M	A	+		▸ 06/92	126445	**819747**	92	96	97	101	22X1.5	29
8921218 ▸																		
1.6,1.6 i	*15B/B24/BD4, 15E/B24/BD4*	E	1580	XU52C, XU5M	A	-		06/88 ▸ 06/92	126444	**819755**	88	92	93	97	22X1.5	29
1.6	*15BB24, 15EB24*	E	1580	XU52C	A			06/88 ▸ 03/90	126421	**819761**	92		97		22X1.5	29
1.6,1.6 i	*15B/B24/BD4, 15E/B24/BD4*	E	1580	XU52C, XU5M	A			06/88 ▸ 06/92	126418	**819773**	88	92	93	97	22X1.5	29
1.6	*15BB24, 15EB24*	E	1580	XU52C	A			06/88 ▸ 03/90	126423	**819751**	86		95		22X1.5	29
1.6,1.6 i	*15B/B24/BD4, 15E/B24/BD4*	E	1580	XU5M, XU52C	A			04/90 ▸ 06/92	126440	**819752**	92		97		22X1.5	29
1.6,1.6 i	*15B/8A2/B12/B22/B32/B52*	E	1580	XU51C, XU5M, XU52C, XU5CP	M	+/-		06/87 ▸ 1990	126422	**819771**	92	96	97	101	22X1.5	29
▸ 8921217	*BD2, 15SB22, 15E/B12/B22 B32/B52*																	
1.6,1.6 i	*15EB24, 15B/B24/BD4*	E	1580	XU52C, XU5M	A	+/-		06/88 ▸ 1990	126422	**819771**	92	96	97	101	22X1.5	29
▸ 8921217																		
1.9,1.9 i,1.9 i 16V	*15B/D22/D27/D52/D62/D67 DD2/DD7/DF2/DF7/DK2, 15E D22/D27/D52/D62/DD2/DD7 DF2/DF7/DK2*	E	1905	XU9JAZ, XU92C, XU9J2, XU9J1 XU9M, XU9J4	M	+/-		06/87 ▸ 06/92	126444	**819755**	88	92	93	97	22X1.5	29
1.9,1.9 i,1.9 i 16V	*15B/D22/D27/D52/D62/D67 DD2/DD7/DF2/DF7/DK2, 15E D22/D27/D52/D62/DD2/DD7 DF2/DF7/DK2*	E	1905	XU9M, XU9J4, XU9J2, XU9J1 XU9JAZ, XU92C	M	+/-		06/87 ▸ 06/92	126423	**819751**	86		95		22X1.5	29
1.9,1.9 i,1.9 i 16V	*15B/D22/D27/D52/D62/D67 DD2/DD7/DF2/DF7/DK2, 15E D22/D27/D52/D62/DD2/DD7 DF2/DF7/DK2*	E	1905	XU9J2, XU9JAZ, XU92C, XU9J1 XU9J4, XU9M	M	+/-		03/90 ▸ 06/92	126440	**819752**	92		97		22X1.5	29
1.9,1.9 i,1.9 i 16V	*15B/D22/D27/D52/D62/D67 DD2/DD7/DF2/DF7/DK2, 15E D22/D27/D52/D62/DD2/DD7 DF2/DF7/DK2*	E	1905	XU92C, XU9M, XU9J2, XU9JAZ XU9J4, XU9J1	M	+		03/90 ▸ 06/92	126445	**819747**	92	96	97	101	22X1.5	29
8921218 ▸																		
1.9,1.9 i,1.9 i 16V	*15B/D22/D27/D52/D62/DD2 DD7/DF2/DK2, 15E/D22/D27 D52/D62/DD2/DD7/DF2/DK2*	E	1905	XU9J2, XU9J1, XU92C, XU9JAZ XU9M, XU9J4	M			06/87 ▸ 03/90	126421	**819761**	92		97		22X1.5	29
1.9,1.9 i,1.9 i 16V	*15B/D22/D27/D52/D62/D67 DD2/DD7/DF2/DF7/DK2, 15E D22/D27/D52/D62/DD2/DD7 DF2/DF7/DK2*	E	1905	XU92C, XU9J1, XU9J2, XU9M XU9JAZ, XU9J4	M			06/87 ▸ 06/92	126418	**819773**	88	92	93	97	22X1.5	29

• **New** Nouveau **Nuevo** Novo **Nuovo** Nieuw **Neu** Yeni Новый Nou

PEUGEOT (.../...)

405 (87>92) (.../...)

1.9,1.9 i	15B/D24/D54/D64/DF4/DK4 15E/D24/D54/D64/DD2/DF4 DK4	E	1905	XU9J2, XU92C, XU9J1A, XU9M XU9JAZ, XU9J1	A	+/-		06/87 ▸ 06/92	126423	**819751**	86		95		22X1.5	29
1.9,1.9 i	15B/D24/D54/D64/DK4, 15E D24/D54/D64/DF4/DK4	E	1905	XU92C, XU9J2, XU9JAZ, XU9J1	A	+/-		06/87 ▸ 05/90	126422	**819771**	92	96	97	101	22X1.5	29
1.9,1.9 i	15B/D24/D54/D64/DF4/DK4 15E/D24/D64/DD2/DF4/DK4	E	1905	XU9JAZ, XU92C, XU9J1, XU9J2 XU9J1A, XU9M	A	+/-		03/90 ▸ 06/92	126440	**819752**	92		97		22X1.5	29
1.9,1.9 i 8921218 ▸	15B/D24/D54/D64/DF4/DK4 15E/D24/D64/DD2/DF4/DK4	E	1905	XU9J1, XU92C, XU9J2, XU9JAZ XU9J1A, XU9M	A	+		03/90 ▸ 06/92	126445	**819747**	92	96	97	101	22X1.5	29
1.9,1.9 i	15B/D24/D54/D64/DF4/DK4 15E/D24/D54/D64/DD2/DF4 DK4	E	1905	XU9J2, XU9J1A, XU92C, XU9JAZ XU9J1, XU9M	A	-		06/87 ▸ 06/92	126444	**819755**	88	92	93	97	22X1.5	29
1.9,1.9 i	15B/D24/D54/D64, 15E/D24 D54/D64/DF4	E	1905	XU92C, XU9J2, XU9J1	A			06/87 ▸ 03/90	126421	**819761**	92		97		22X1.5	29
1.9,1.9 i	15B/D24/D54/D64/DF4/DK4 15E/D24/D54/D64/DD2/DF4 DK4	E	1905	XU9J2, XU92C, XU9J1A, XU9JAZ XU9M, XU9J1	A			06/87 ▸ 06/92	126418	**819773**	88	92	93	97	22X1.5	29
1.9,1.9 i,1.9 i 16V 8921217 ▸	15B/D22/D27/D52/D62/D67 DD2/DD7/DF2/DK2, 15E/D22 D27/D52/D62/DD2/DD7/DF2 DK2	E	1905	XU9M, XU92C, XU9J2, XU9J4 XU9J1, XU9JAZ	M	+		06/87 ▸ 05/90	126422	**819771**	92	96	97	101	22X1.5	29
1.7 D,1.7 TD	15B/A82/A92/AJ2, 15SA92 15E/A82/A92/AJ2	D	1769	XUD7, XUD7TE	M	+/-		06/88 ▸ 06/92	126440	**819752**	92		97		22X1.5	29
1.7 D,1.7 TD 8921218 ▸	15B/A82/A92/AJ2, 15SA92 15E/A82/A92/AJ2	D	1769	XUD7TE, XUD7	M	+		06/90 ▸ 06/92	126445	**819747**	92	96	97	101	22X1.5	29
1.7 D,1.7 TD	15B/A82/A92/AJ2, 15SA92 15E/A82/A92/AJ2	D	1769	XUD7TE, XUD7	M	-		06/87 ▸ 06/92	126444	**819755**	88	92	93	97	22X1.5	29
1.7 D,1.7 TD	15B/A82/A92/AJ2, 15SA92 15E/A82/A92/AJ2	D	1769	XUD7TE, XUD7	M			06/87 ▸ 06/92	126423	**819751**	86		95		22X1.5	29
1.7 D,1.7 TD	15B/A82/A92/AJ2, 15SA92 15E/A82/A92/AJ2	D	1769	XUD7TE, XUD7	M			06/87 ▸ 06/92	126418	**819773**	88	92	93	97	22X1.5	29
1.7 TD	15BA82, 15EA82	D	1769	XUD7TE	M			06/87 ▸ 03/90	126421	**819761**	92		97		22X1.5	29
1.7 TD 8921217 ▸	15EA82, 15B/A82/A92	D	1769	XUD7TE	M	+/-		06/87 ▸ 1990	126422	**819771**	92	96	97	101	22X1.5	29
1.9 D	15B/D92/DJ2, 15SD92, 15E/D92/DJ2	D	1905	XUD9A	M	+/-		06/87 ▸ 03/90	126421	**819761**	92		97		22X1.5	29
1.9 D 8921218 ▸	15B/D92/DJ2, 15SD92, 15E/D92/DJ2	D	1905	XUD9A	M	+		03/90 ▸ 06/92	126445	**819747**	92	96	97	101	22X1.5	29
1.9 D	15B/D92/DJ2, 15SD92, 15E/D92/DJ2	D	1905	XUD9A	M	-		06/87 ▸ 06/92	126444	**819755**	88	92	93	97	22X1.5	29
1.9 D	15B/D92/DJ2, 15SD92, 15E/D92/DJ2	D	1905	XUD9A	M			06/87 ▸ 06/92	126418	**819773**	88	92	93	97	22X1.5	29
1.9 D	15B/D92/DJ2, 15SD92, 15E/D92/DJ2	D	1905	XUD9A	M			06/87 ▸ 06/92	126440	**819752**	92		97		22X1.5	29
1.9 D	15B/D92/DJ2, 15SD92, 15E/D92/DJ2	D	1905	XUD9A	M			06/87 ▸ 03/90	126423	**819751**	86		95		22X1.5	29
1.9 D 8921217 ▸	15B/D92/DJ2, 15SD92, 15E/D92/DJ2	D	1905	XUD9A	M	+		06/87 ▸ 03/90	126422	**819771**	92	96	97	101	22X1.5	29

405 (92>96)

1.4,1.4 i	4BK/2D2/DX2, 4EK/2D2/DX2	E	1360	TU3MC, TU3.2, TU3M	M			07/92 ▸ 10/96	126445	**819747**	92	96	97	101	22X1.5	29
1.6,1.6 i	4BB/2A2/5A2/DY2/FZ2, 4EB 2A2/5A2/DY2/FZ2, 4SB/2A2 DY2/FZ2	E	1580	XU5JP, XU52C, XU5M	M			07/92 ▸ 10/96	126445	**819747**	92	96	97	101	22X1.5	29
1.6,1.6 i	4BB/2A4/DY4/FZ4, 4EB/2A4 DY4/FZ4	E	1580	XU5M, XU5JP, XU52C	A			07/92 ▸ 10/96	126445	**819747**	92	96	97	101	22X1.5	29
1.8 i	4BL/6A2/FZ2, 4EL/6A2/FZ2	E	1761	XU7JP, XU7JPPR	M			07/92 ▸ 10/96	126445	**819747**	92	96	97	101	22X1.5	29
1.8 i	4BLFZ4, 4ELFZ4	E	1761	XU7JP	A			07/92 ▸ 10/96	126445	**819747**	92	96	97	101	22X1.5	29
1.9,1.9 i	4BD/2H2/2H6/2H8/5A2/6D2 4ED/2H2/2H8/5A2/6D2	E	1905	XU92C, XU9J2	M			07/92 ▸ 10/96	126445	**819747**	92	96	97	101	22X1.5	29
1.9,1.9 i	4ED2H4, 4BD/2H4/5A4/6D4	E	1905	XU92C, XU9J2	A			07/92 ▸ 10/96	126445	**819747**	92	96	97	101	22X1.5	29
2.0 i,2.0 i Turbo 16S	4BR/FX2/FX7/FY2/GZ7, 4ER 6D2/FX2/FX7	E	1998	XU10J2, XU10J2C, XU10J4 XU10J4TE	M			07/92 ▸ 10/96	126445	**819747**	92	96	97	101	22X1.5	29
2.0 i	4BR/FX4, 4ER/6D4/FX4	E	1998	XU10J2, XU10J2C	A			07/92 ▸ 10/96	126445	**819747**	92	96	97	101	22X1.5	29
1.7 TD	15BA82	D	1769	XUD7TE	M			1994 ▸ 10/95	126444	**819755**	88	92	93	97	22X1.5	29
1.9 D,1.9 TD	4BD/8A2/9B2/HY2/JZ2 4SD9B2, 4ED/8A2/9B2/HY2 JY2/JZ2	D	1905	XUD9A, XUD9TE	M			07/92 ▸ 10/96	126444	**819755**	88	92	93	97	22X1.5	29

• **New** Nouveau **Nuevo** Novo **Nuovo** Nieuw **Neu** Yeni Новый Nou

PEUGEOT (.../...)

			CC			AC			OE	Valeo	T1	T2	T3	T4	COD.	mm
405 (92>96) (.../...)																
1.9 TD	4BD/8A2/HY2, 4ED/8A2/HY2	D	1905	XUD9TE	M	+/-		07/92 ▸ 10/96	133827	•820834			60		14X1.25	
406 (95>99)																
1.6 i	8BB/FZ2/FZD/FZE	E	1580	XU5JP	M			10/95 ▸ 03/99	126440	**819752**	92		97		22X1.5	29
1.8 i,1.8 i 16V	8CLFYE, 8BL/6A2/FXE/FY2 FY8/FYD/FYE/FYS/FYT/FYW 8EL/6A2/FXE/FYE/FYT/FYW 8FL/FXE/FYE/FYT	E	1761	XU7JB, XU7JP4, XU7JP	M	+/-		10/95 ▸ 04/99	126440	**819752**	92		97		22X1.5	29
1.8 i 16V	8ELFYP, 8FLFYP, 8BL/FYP	E	1761	XU7JP4	A			07/96 ▸ 03/99	126445	**819747**	92	96	97	101	22X1.5	29
1.8 i 16V	8BLFYP	E	1761	XU7JP4	A			07/96 ▸ 03/99	126440	**819752**	92		97		22X1.5	29
2.0 i 16V	8BR/6E2/FV2/FVD/FVE/FVW 8CR/FV2/FVE, 8FRFVE, 8ER 6E2/FVE/FVW	E	1998	XU10J4R	M	+/-		10/95 ▸ 04/99	126445	**819747**	92	96	97	101	22X1.5	29
2.0 i 16V	8BR/6E4/FV4/FVN/FVP, 8CR FV8/FVP/FVT, 8FRFVP, 8ER 6E2/FVP	E	1998	XU10J4R	A	+/-		10/95 ▸ 04/99	126445	**819747**	92	96	97	101	22X1.5	29
1.9 TD	8BD/8B2/8BD/HVF/HWE/HX2 HXE, 8ED/8BD/HWE/HX2/HXE 8FD/HWE/HXE	D	1905	XUD9TE, XUD9BTF, XUD9SD XUD9BSD	M	-		11/95 ▸ 03/99	126445	**819747**	92	96	97	101	22X1.5	29
1.9 TD	8EDHWE, 8FDHWE, 8BD/HVF HWE	D	1905	XUD9SD, XUD9BSD	M			07/96 ▸ 03/99	126444	**819755**	88	92	93	97	22X1.5	29
1.9 TD	8EDHXP, 8FDHXP, 8BD/HXP	D	1905	XUD9BTF	A	-		03/97 ▸ 03/99	126445	**819747**	92	96	97	101	22X1.5	29
406 (95>2003)																
1.9 TD	8BD/8B2/8BD/HVF/HWE/HX2 HXE, 8ED/8BD/HWE/HX2/HXE 8FD/HWE/HXE	D	1905	XUD9BSD,XUD9BTF,XUD9SD,XUD9TE	M	+/-		11/95 ▸ 03/99	133827	•820834			60		14X1.25	
406 (99>)																
1.6 i	8BBFZE	E	1580	XU5JP	M			04/99 ▸ 03/04	126440	**819752**	92		97		22X1.5	29
1.8 i,1.8 i 16V 1.8 i GPL 16V	8BL/6A2/FXE/FYE/FYF/FYT FYW, 8EL/FXE/FYE/FYT, 8FL FXE/FYE	E	1761	XU7JB, XU7JP4, XU7JP	M			04/99 ▸ 04/04	126440	**819752**	92		97		22X1.5	29
1.8 i 16V	8BL/FYP, 8FLFYP, 8EL/FYP FYR	E	1761	XU7JP4	A			04/99 ▸ 04/04	126445	**819747**	92	96	97	101	22X1.5	29
504																
1.6	504/M71/U01/V01	E	1618	XC7	M			08/79 ▸ 07/85	024212	**819758**	68		82		22X1.5	29
1.8,1.8 i	504/A01/A02/B02/C02/E01 EA1/F01/F81/M01/M51/V51 V57	E	1796	XM7, KF5, XM	M			06/68 ▸ 09/93	024212	**819758**	68		82		22X1.5	29
1.8	504/A03/E03/M03/M53	E	1796	XM7, XM	A			12/68 ▸ 07/85	024212	**819758**	68		82		22X1.5	29
2.0,2.0 i	504/A11/A12/B12/C12/D11 F11/H11/MA1/MY1/R17/V11	E	1971	XN1, XN2, XNA	M			09/69 ▸	024212	**819758**	68		82		22X1.5	29
2.0,2.0 i	504/A13/A14/B14/C14/D13 F13/H13/MA3/MY3	E	1971	XN1, XNA, XN2	A			09/69 ▸ 07/85	024212	**819758**	68		82		22X1.5	29
2.7 V6,2.7 i V6 Injection	504/B31/C31/C32	E	2664	ZMJ, ZM112	M			09/74 ▸ 07/84	126415	**819744**	82		92		22X1.5	29
2.7 V6	504C33	E	2664	ZM112	A			09/74 ▸ 07/77	126415	**819744**	82		92		22X1.5	29
1.9 D	504/E20/F80/M20/U20/V20	D	1948	XD88	M			08/70 ▸ 07/85	126415	**819744**	82		92		22X1.5	29
1.9 D	504/E20/F80/M20/U20/V20	D	1948	XD88	M			08/70 ▸ 07/85	126416	**819772**	79	83	84	88	22X1.5	29
1.9 D	504/E20/F80/K40/M20/U20/V20	D	1948	XD88	M			08/70 ▸ 07/85	126404	**819749**	75		85		22X1.5	29
1.9 D	504/E20/F80/K40/M20/U20/V20	D	1948	XD88	M			08/70 ▸ 07/85	024212	**819758**	68		82		22X1.5	29
2.1 D	504/A20/D20/D80/E20/F20/F80/H20/M20 V60/VZ0	D	2112	XD90, XD4	M			09/69 ▸ 07/85	126416	**819772**	79	83	84	88	22X1.5	29
2.1 D	504/A20/D20/D80/E20/F20/F80/H20/M20 V60/VZ0	D	2112	XD90, XD4	M			09/69 ▸ 07/85	024212	**819758**	68		82		22X1.5	29
2.1 D	504/A20/D20/D80/E20/F20/F80/H20/M20 V60/VZ0	D	2112	XD90, XD4	M			09/69 ▸ 07/85	126404	**819749**	75		85		22X1.5	29
2.1 D	504/A20/D20/D80/E20/F20/F80/H20/M20 V60/VZ0	D	2112	XD90, XD4	M			09/69 ▸ 07/85	126415	**819744**	82		92		22X1.5	29
2.3 D	504/A40/D40/F20/F40/H40/M40/R48/V40 V48	D	2304	XD2	M			08/71 ▸	126404	**819749**	75		85		22X1.5	29
2.3 D	504/A40/D40/F20/F40/H40/M40/R48/V40 V48	D	2304	XD2	M			08/71 ▸	024212	**819758**	68		82		22X1.5	29

• **New** Nouveau **Nuevo** Novo **Nuovo** Nieuw **Neu** Yeni Новый Nou

PEUGEOT (.../...)

504 (.../...)

2.3 D	*504/A40/D40/F20/F40/H40/M40/R48/V40 V48*	D	2304	XD2	M			08/71 ▸	126416	**819772**	79	83	84	88	22X1.5	29
2.3 D	*504/A40/D40/F20/F40/H40/M40/R48/V40 V48*	D	2304	XD2	M			08/71 ▸	126415	**819744**	82		92		22X1.5	29
2.3 D	*504/A45/F45/M45*	D	2304	XD2	A			07/75 ▸ 07/83	024212	**819758**	68		82		22X1.5	29
2.3 D	*504/A45/F45/M45*	D	2304	XD2	A			07/75 ▸ 07/83	126404	**819749**	75		85		22X1.5	29
2.3 D	*504/A45/F45/M45*	D	2304	XD2	A			07/75 ▸ 07/83	126415	**819744**	82		92		22X1.5	29
2.3 D	*504/A45/F45/M45*	D	2304	XD2	A			07/75 ▸ 07/83	126416	**819772**	79	83	84	88	22X1.5	29
2.5 D	*504V58*	D	2498	XD3	M			08/85 ▸ 09/93	126416	**819772**	79	83	84	88	22X1.5	29
2.5 D	*504V58*	D	2498	XD3	M			08/85 ▸ 09/93	024212	**819758**	68		82		22X1.5	29
2.5 D	*504V58*	D	2498	XD3	M			08/85 ▸ 09/93	126404	**819749**	75		85		22X1.5	29
2.5 D	*504V58*	D	2498	XD3	M			08/85 ▸ 09/93	126415	**819744**	82		92		22X1.5	29

505

1.6	*551AT1*	E	1618	XC7	M			08/83 ▸ 07/84	126414	**819757**	79		88		22X1.5	29
1.8	*551/A01/A71/A77/D01/D71/D77/F01/F71 F77/FC2*	E	1796	XM7, XM7A	M			08/80 ▸	126414	**819757**	79		88		22X1.5	29
1.8	*551/A01/A71/A77/D01/D71/D77/F01/F71 F77/FC2*	E	1796	XM7, XM7A	M			08/80 ▸	126417	**819770**	83	88	87	92	22X1.5	29
1.8	*551/A03/A73/F73*	E	1796	XM7A, XM7	A			05/79 ▸	126417	**819770**	83	88	87	92	22X1.5	29
1.8	*551/A03/A73/F73*	E	1796	XM7, XM7A	A			05/79 ▸	126414	**819757**	79		88		22X1.5	29
2.0,2.0 i	*551/A11/A17/AF6/D11/D17 DG1/F11/F17/FB1/G11/G17 H11/H17/S11/S17*	E	1971	XN1, XN1A, XN6	M			05/79 ▸	126417	**819770**	83	88	87	92	22X1.5	29
2.0,2.0 i	*551/A11/A17/AF6/D11/D17 DG1/F11/F17/FB1/G11/G17 H11/H17/S11/S17*	E	1971	XN1, XN1A, XN6	M			05/79 ▸	126414	**819757**	79		88		22X1.5	29
2.0,2.0 i	*551/A13/A18/AF4/D13/D18 F13/F18/FF4*	E	1971	XN6, XN1A, XN1	A			05/79 ▸	126414	**819757**	79		88		22X1.5	29
2.0,2.0 i	*551/A13/A18/AF4/D13/D18 F13/F18/FF4*	E	1971	XN1, XN1A, XN6	A			05/79 ▸	126417	**819770**	83	88	87	92	22X1.5	29
2.0 i	*551/A12/A16/D16/F16/FD1*	E	1995	ZEJK, ZEJ	M			05/79 ▸	126420	**819760**	86		95		22X1.5	29
2.0 i	*551/A12/A16/D16/F16/FD1*	E	1995	ZEJ, ZEJK	M			05/79 ▸	126417	**819770**	83	88	87	92	22X1.5	29
2.0 i	*551/A14/A19*	E	1995	ZEJ, ZEJK	A			05/79 ▸ 1989	126417	**819770**	83	88	87	92	22X1.5	29
2.0 i	*551/A14/A19*	E	1995	ZEJ, ZEJK	A			05/79 ▸ 1989	126420	**819760**	86		95		22X1.5	29
2.2 T,2.2 Turbo 2.2 Turbo injection	*BA716, 551/A66/A96*	E	2155	N9TE, N9T	M			08/82 ▸	126417	**819770**	83	88	87	92	22X1.5	29
2.2 T,2.2 Turbo 2.2 Turbo injection	*BA716, 551/A66/A96*	E	2155	N9TE, N9T	M			08/82 ▸	126414	**819757**	79		88		22X1.5	29
2.2 Turbo 2.2 Turbo injection	*BA71F, BD71G, BF71G, C225 CE328, 551/A99*	E	2155	N9TE	A			07/88 ▸	126417	**819770**	83	88	87	92	22X1.5	29
2.2 Turbo 2.2 Turbo injection	*BA71F, BD71G, BF71G, C225 CE328, 551/A99*	E	2155	N9TE	A			07/88 ▸	126414	**819757**	79		88		22X1.5	29
2.2 i	*551/A36/A86/D86/F86, BD815, BF327 BF816, BA8/15/16*	E	2165	ZDJL, ZDJK	M			08/81 ▸	126417	**819770**	83	88	87	92	22X1.5	29
2.2 i	*551/A36/A86/D86/F86, BD815, BF327 BF816, BA8/15/16*	E	2165	ZDJL, ZDJK	M			08/81 ▸	126420	**819760**	86		95		22X1.5	29
2.2 i	*551/A34/A84/A89/D89/F89, BD81E BF81F, CF221, CF327, BA8/1E/2F/2R*	E	2165	ZDJL, ZDJK	A			08/81 ▸	126417	**819770**	83	88	87	92	22X1.5	29
2.2 i	*551/A34/A84/A89/D89/F89, BD81E BF81F, CF221, CF327, BA8/1E/2F/2R*	E	2165	ZDJL, ZDJK	A			08/81 ▸	126420	**819760**	86		95		22X1.5	29
2.8 V6	*551/A76, BA9/16/17/19*	E	2849	ZNJK-170, ZNJK-146	M			08/85 ▸ 1990	126414	**819757**	79		88		22X1.5	29
2.8 V6	*551/A76, BA9/16/17/19*	E	2849	ZNJK-146, ZNJK-170	M			08/85 ▸ 1990	126418	**819773**	88	92	93	97	22X1.5	29
2.8 V6	*551/A79, BA9/1F/1J/1R*	E	2849	ZNJK-170, ZNJK-146	A			08/86 ▸ 1990	126414	**819757**	79		88		22X1.5	29
2.8 V6	*551/A79, BA9/1F/1J/1R*	E	2849	ZNJK-146, ZNJK-170	A			08/86 ▸ 1990	126418	**819773**	88	92	93	97	22X1.5	29
2.3 D	*551/A40/A48/D40/D48/F40/S40/S48*	D	2304	XD2	M			08/79 ▸ 07/85	126416	**819772**	79	83	84	88	22X1.5	29
2.3 D	*551/A40/A48/D40/D48/F40/S40/S48*	D	2304	XD2	M			08/79 ▸ 07/85	024212	**819758**	68		82		22X1.5	29
2.3 TD	*551A46*	D	2304	XD2S	M			08/80 ▸ 08/81	126404	**819749**	75		85		22X1.5	29
2.3 TD	*551A46*	D	2304	XD2S	M			09/81 ▸ 07/85	126414	**819757**	79		88		22X1.5	29
2.3 D	*551A45*	D	2304	XD2	A			08/79 ▸ 07/84	126416	**819772**	79	83	84	88	22X1.5	29
2.3 D	*551A45*	D	2304	XD2	A			08/79 ▸ 07/84	024212	**819758**	68		82		22X1.5	29
2.3 TD	*551A44*	D	2304	XD2S	A			08/80 ▸ 08/81	126404	**819749**	75		85		22X1.5	29
2.3 TD	*551A44*	D	2304	XD2S	A			09/81 ▸ 07/85	126414	**819757**	79		88		22X1.5	29

• **New** Nouveau **Nuevo** Novo **Nuovo** Nieuw **Neu** Yeni Новый Nou

		Type Ctr.		cc			AC			OE	Valeo	(°)C T1	T2	T3	T4	COD.	○: mm	
PEUGEOT (.../...)																			
505 (.../...)																			
2.5 D	*551/A50/A53/A58/D50/D57/D58/DH8/F50 F58/G58/H58/S50/S58*	D	2498	XD3	M			08/79 ▸		126416	**819772**	79	83	84	88	22X1.5	29	
2.5 D	*551/A50/A53/A58/D50/D57/D58/DH8/F50 F58/G58/H58/S50/S58*	D	2498	XD3	M			08/79 ▸		126404	**819749**	75		85		22X1.5	29	
2.5 TD	*551A56*	D	2498	XD3T, XD3TE	M			08/83 ▸ 1990		126415	**819744**	82		92		22X1.5	29	
2.5 TD	*551A56*	D	2498	XD3T, XD3TE	M			08/83 ▸ 1990		126417	**819770**	83	88	87	92	22X1.5	29	
2.5 D	*551/A55/A57/D55/F55/F57*	D	2498	XD3	A			08/81 ▸		126416	**819772**	79	83	84	88	22X1.5	29	
2.5 D	*551/A55/A57/D55/F55/F57*	D	2498	XD3	A			08/81 ▸		126404	**819749**	75		85		22X1.5	29	
2.5 TD	*551/A54/A59/D53/D59/F59*	D	2498	XD3T, XD3TE	A			08/83 ▸		126415	**819744**	82		92		22X1.5	29	
2.5 TD	*551/A54/A59/D53/D59/F59*	D	2498	XD3T, XD3TE	A			08/83 ▸		126417	**819770**	83	88	87	92	22X1.5	29	
604																			
2.0 i	*604A18*	E	1971	XN6	M			07/82 ▸ 1984		126414	**819757**	79		88		22X1.5	29	
2.7 V6,2.7 i V6	*604/A31/A32/A37*	E	2664	ZMJ, ZM	M			10/77 ▸ 1985		126415	**819744**	82		92		22X1.5	29	
2.7 V6,2.7 i V6	*604/A33/A34*	E	2664	ZM, ZMJ	A			03/76 ▸ 1985		126415	**819744**	82		92		22X1.5	29	
2.8 i V6	*604A66*	E	2849	ZNJ	M			09/83 ▸ 12/86		126415	**819744**	82		92		22X1.5	29	
2.8 i V6	*604A64*	E	2849	ZNJ	A			1984 ▸ 1985		126415	**819744**	82		92		22X1.5	29	
2.3 TD	*604/A40/A46*	D	2304	XD2S	M	+		08/82 ▸ 1985		126417	**819770**	83	88	87	92	22X1.5	29	
2.3 TD	*604/A40/A46*	D	2304	XD2S	M			02/79 ▸ 1985		126404	**819749**	75		85		22X1.5	29	
2.3 TD	*604/A40/A46*	D	2304	XD2S	M			02/79 ▸ 1985		126414	**819757**	79		88		22X1.5	29	
2.3 TD	*604/A40/A46*	D	2304	XD2S	M			08/82 ▸ 1985		126415	**819744**	82		92		22X1.5	29	
2.3 TD	*604A45*	D	2304	XD2S	A	+		08/83 ▸ 1985		126417	**819770**	83	88	87	92	22X1.5	29	
2.3 TD	*604A45*	D	2304	XD2S, XD2SC	A			02/79 ▸ 07/83		126404	**819749**	75		85		22X1.5	29	
2.3 TD	*604A45*	D	2304	XD2SC, XD2S	A			02/79 ▸ 07/83		126414	**819757**	79		88		22X1.5	29	
2.3 TD	*604A45*	D	2304	XD2S	A			08/83 ▸ 1985		126415	**819744**	82		92		22X1.5	29	
2.5 TD	*604A56*	D	2498	XD3T	M	+		09/83 ▸ 12/86		126417	**819770**	83	88	87	92	22X1.5	29	
2.5 TD	*604A56*	D	2498	XD3T	M			09/83 ▸ 12/86		126415	**819744**	82		92		22X1.5	29	
2.5 TD	*604A55*	D	2498	XD3T	A	+		09/83 ▸ 12/86		126417	**819770**	83	88	87	92	22X1.5	29	
2.5 TD	*604A55*	D	2498	XD3T	A			09/83 ▸ 12/86		126415	**819744**	82		92		22X1.5	29	
605 (89>94)																			
2.0,2.0 i,2.0 i Turbo	*6BR/2A2/2A8/5A2/6A2/6A8 DZ2/FZ2/FZ8/FZ9/GY2*	E	1998	XU102C, XU10M, XU10J2TE XU102C TR, XU10J2	M			10/89 ▸ 06/94		126444	**819755**	88	92	93	97	22X1.5	29	
2.0,2.0 i,2.0 i Turbo	*6BR/2A2/2A8/5A2/6A2/6A8 DZ2/FZ2/FZ8/FZ9/GY2*	E	1998	XU10J2, XU102C TR, XU10J2TE XU10M, XU102C	M			10/89 ▸ 06/94		126427	**819754**	79	83	84	88	22X1.5	29	
2.0 i,2.0 i Turbo	*6BR/6A4/FZ4/GY4*	E	1998	XU10J2TE, XU10J2	A			04/90 ▸ 06/94		126427	**819754**	79	83	84	88	22X1.5	29	
2.0 i,2.0 i Turbo	*6BR/6A4/FZ4/GY4*	E	1998	XU10J2TE, XU10J2	A			04/90 ▸ 06/94		126444	**819755**	88	92	93	97	22X1.5	29	
3.0 i V6,3.0 i V6 24V	*6BU/FZ2/KZ2*	E	2963	ZPJ4, ZPJ	M			09/93 ▸ 06/94		126444	**819755**	88	92	93	97	22X1.5	29	
3.0 i V6,3.0 i V6 24V	*6BU/FZ2/KZ2*	E	2963	ZPJ, ZPJ4	M			09/93 ▸ 06/94		126427	**819754**	79	83	84	88	22X1.5	29	
3.0 i V6	*6BUFZ4*	E	2963	ZPJ	A			09/93 ▸ 06/94		126444	**819755**	88	92	93	97	22X1.5	29	
3.0 i V6	*6BUFZ4*	E	2963	ZPJ	A			09/93 ▸ 06/94		126427	**819754**	79	83	84	88	22X1.5	29	
3.0 i V6,3.0 i V6 24V	*6BS/6A2/FZ2/KZ2*	E	2975	ZPJ4, ZPJ	M			10/89 ▸ 06/94		126444	**819755**	88	92	93	97	22X1.5	29	
3.0 i V6,3.0 i V6 24V	*6BS/6A2/FZ2/KZ2*	E	2975	ZPJ, ZPJ4	M			10/89 ▸ 06/94		126427	**819754**	79	83	84	88	22X1.5	29	
3.0 i V6	*6BS/6A4/FZ4*	E	2975	ZPJ	A			04/90 ▸ 06/94		126427	**819754**	79	83	84	88	22X1.5	29	
3.0 i V6	*6BS/6A4/FZ4*	E	2975	ZPJ	A			04/90 ▸ 06/94		126444	**819755**	88	92	93	97	22X1.5	29	
2.1 TD Turbo	*6BP/8A2/8B2/8C2/HZ2*	D	2088	XUD11BTE, XUD11ATE	M			04/90 ▸ 06/94		126444	**819755**	88	92	93	97	22X1.5	29	
2.1 TD Turbo	*6BP/8A4/8C4/HZ4*	D	2088	XUD11BTE, XUD11ATE	A			04/90 ▸ 06/94		126444	**819755**	88	92	93	97	22X1.5	29	
2.1 D	*6BP/9A2/JZ2*	D	2138	XUD11A	M			09/90 ▸ 06/94		126444	**819755**	88	92	93	97	22X1.5	29	
605 (94>99)																			
2.0 i Turbo	*6BRGX2*	E	1998	XU10J2CTE	M	-		07/94 ▸ 05/99		126427	**819754**	79	83	84	88	22X1.5	29	
2.0,2.0 i,2.0 i Turbo	*6BR/5A2/6A8/GX2/GXE*	E	1998	XU10J2CTE, XU10J2 XU10J2CTEL3, XU102C TR	M	-		07/94 ▸ 05/99		126444	**819755**	88	92	93	97	22X1.5	29	
2.0 i,2.0 i Turbo	*6BR/6A4/GX4/GXP*	E	1998	XU10J2CTE, XU10J2 XU10J2CTEL3	A	-		07/94 ▸ 05/99		126444	**819755**	88	92	93	97	22X1.5	29	
3.0 i V6,3.0 i V6 24V	*6BU/FZ2/KZ2*	E	2963	ZPJ, ZPJ4	M	+/-		07/94 ▸ 05/99		126427	**819754**	79	83	84	88	22X1.5	29	
3.0 i V6	*6BUFZ4*	E	2963	ZPJ	A	+/-		07/94 ▸ 05/99		126427	**819754**	79	83	84	88	22X1.5	29	
806 (94>98)																			
1.8 i	*221LA2*	E	1761	XU7JP	M	-		06/95 ▸ 09/98		126440	**819752**	92		97		22X1.5	29	
2.0 i	*221/RB2/RB9*	E	1998	XU10J2C	M	-		07/94 ▸ 09/98		126440	**819752**	92		97		22X1.5	29	
2.0 i Turbo	*221RA2*	E	1998	XU10J2CTEL3, XU10J2CTE	M	-		07/94 ▸ 09/98		126445	**819747**	92	96	97	101	22X1.5	29	
1.9 TD	*221/DA2/DC2/DH2*	D	1905	XUD9TE, XUD9BTF, XUD9TEF	M	-		08/94 ▸ 09/98		126444	**819755**	88	92	93	97	22X1.5	29	

• **New** Nouveau **Nuevo** Novo **Nuovo** Nieuw **Neu** Yeni Новый Nou

		Type Ctr.		cc		AC			OE	Valeo	(°)C T1	T2	T3	T4	COD.	mm
PEUGEOT (.../...)																		
806 (94>98) (.../...)																		
2.1 TD	*221PA2*	D	2088	XUD11BTE	M	-		06/96 ▸ 09/98	126444	**819755**	88	92	93	97	22X1.5	29
806 (98>2002)																		
1.8 i	*221LA2*	E	1761	XU7JP	M	-		10/98 ▸ 05/02	126440	**819752**	92		97		22X1.5	29
2.0 i Turbo CT	*221RA2*	E	1998	XU10J2CTEL3	M	-		10/98 ▸ 05/02	126445	**819747**	92	96	97	101	22X1.5	29
2.0 i,2.0 i 16V	*221RB2, AFRFVB*	E	1998	XU10J2C, XU10J4R	M	-		10/98 ▸ 05/02	126440	**819752**	92		97		22X1.5	29
1.9 TD	*221DH2*	D	1905	XUD9BTF	M	-		10/98 ▸ 05/02	126444	**819755**	88	92	93	97	22X1.5	29
2.1 TD	*221PA2*	D	2088	XUD11BTE	M	-		10/98 ▸ 05/02	126444	**819755**	88	92	93	97	22X1.5	29
PEUGEOT																		
Boxer (94>2001)																		
2.0,2.0 i	*231/A22/A24/A34/B12/B22 B24/C22/C24/G22/H22/V22 V24, 232/B22/B24/G22/H22 J12/J22/K22/L22/V22/V24 233/B22/G22/H22/J22/K22 L22*	E	1998	XU10J2U, XU102CU	M	+		02/94 ▸	126433	**820031**	87	92	92	97	22X1.5	29
1.9 D,1.9 TD	*231/A32/A62/A72/A82/B72 B82/C32/C62/C72/C82/V82 232/B72/B82*	D	1905	XUD9A, XUD9UTF, XUD9TEF XUD9AU	M	+/-		02/94 ▸ 12/01	126434	**819827**	83	87	88	92	22X1.5	29
1.9 D,1.9 TD	*231/A32/A62/A72/A82/B72 B82/C32/C62/C72/C82/E82 G82/H82/U82/V82, 232/B72 B82/E82/F82/G82/H82, 233 F82/G82/H82*	D	1905	XUD9A,XUD9AU,XUD9TEF,XUD9UTF	M	+/-		02/94 ▸ 12/01	133827	•**820834**			60		14X1.25	
2.5 D,2.5 TD,2.5 TDi	*231/A52/B02/B42/B44/B52 B54/B59/B92/B94/C02/C42 C44/G52/H52/J42/J52/V42 V52/V94, 232/B02/B42/B44 B52/B54/B92/B94/G52/H52 H92/J02/J42/J44/J52/J54 J92/J94/K52/K54/L52/L54 L92/V44/V52/V94, 233/B42 B52/G52/H52/J42/J44/J52 J54/J92/K52/K54/L52/L54 234/G52/K52*	D	2446	DJ5TED, DJ5, DJ5T	M	+/-		02/94 ▸ 12/01	126434	**819827**	83	87	88	92	22X1.5	29
2.5 D,2.5 TD	*231/A52/B02/B52/B54/B59 B92/B94/C02/J52/V52/V54 V94, 232/B02/B52/B54/B92 B94/G52/H52/H92/J02/J52 J54/J92/J94/K52/K54/L52 L54/L92/V52/V54/V94, 233 B52/J52/J92, 234/G52/K52*	D	2446	DJ5,DJ5T	M	+/-		02/94 ▸ 12/01	133827	•**820834**			60		14X1.25	
2.8 D,2.8 HDi,2.8 TD	*231/AL2/B52/BL2/BL4/CH2 CL2/GH2/GL2/HL2/JL2/NH2 VL2, 232//BH2/BL2/BL4/GH2 GL2/GL4/HL2/HL4/JH2/JL2 JL4/KH2/KL2/KL4/LL2/LL4 VH2/VL2, 233/BL2/GH2/GL2 HL2/JH2/JL2/JL4/KH2/KL2 KL4/LL2/LL4, 234/GH2/GL2 KH2/KL2*	D	2798	8140-43S, 8140-63, 8140-43	M	+/-		06/99 ▸	126433	**820031**	87	92	92	97	22X1.5	29
2.8 D	*232*	D	2798	8140-63	M	+		06/99 ▸ 12/01	126434	**819827**	83	87	88	92	22X1.5	29
Boxer (2002>2006)																		
2.2 HDi	*ZAR/MF/MP, ZBR/MD/MF/MH MP, ZCR/MD/MF/MH/MM*	D	2179	DW12TED	M	+/-		01/02 ▸	126433	**820031**	87	92	92	97	22X1.5	29
Expert (95>2003)																		
1.6 i	*223AA2, 224AA2, 222/AA2*	E	1581	160A	M	-		09/95 ▸	126440	**819752**	92		97		22X1.5	29
1.8 i	*222/LA9/LB9, 224/LA9/LB9*	E	1761	XU7JP	M	-		07/96 ▸	126440	**819752**	92		97		22X1.5	29

• **New** Nouveau **Nuevo** Novo **Nuovo** Nieuw **Neu** Yeni Новый Nou

		Type Ctr.		CC		AC			OE	Valeo	(°)C T1	T2	T3	T4	COD.	○: mm
PEUGEOT (.../...)																
Expert (95>2003) (.../...)																
1.9 D	*BBW/JZA, BAW/JZA, BEW/JZA, BDW/JYB JZA, BTW/JYB/JZA, BZW/JYB/JZA*	D	1868	DW8, DW8B	M			05/98 ▸ 12/03	126444	**819755**	88	92	93	97	22X1.5	29
1.9 D,1.9 TD	*222/DA2/DB2, 223/DA2/DB2 DH2, 225DA2, 226DA2, 224 DA2/DB2/DH2*	D	1905	XUD9TEF, XUD9A, XUD9BTF	M	-		09/95 ▸	126444	**819755**	88	92	93	97	22X1.5	29
1.9 D,1.9 TD	*222/DA2/DB2, 223/DA2/DB2 DH2, 225DA2, 226DA2, 224 DA2/DB2/DH2*	D	1905	XUD9A,XUD9BTF,XUD9TEF	M	+/-		09/95 ▸ 12/03	133827	**●820834**			60		14X1.25	
Expert II (2004>2006)																
1.9 D	*BVW/JYB, BXW/JYB, BZW/JYB, BTW/JYB*	D	1868	DW8B	M	-		01/04 ▸	126444	**819755**	88	92	93	97	22X1.5	29
J5																
1.8 GPL	*280A11*	G	1796	XM7T-G	M		+ Cable	11/81 ▸ 08/90	126411	**819764**	87		92		22X1.5	29
2.0	*28G224, 280/B22/G22*	G	1971	XN1T-G	M		+ Cable	11/81 ▸ 08/90	126411	**819764**	87		92		22X1.5	29
1.8	*280/A11/C11, 290/A11/C11*	E	1796	XM7T, XM7T3	M		+ Cable	11/81 ▸ 04/92	126411	**819764**	87		92		22X1.5	29
1.8	*290/A11/C11*	E	1796	XM7T	M			05/92 ▸ 02/94	126435	**819774**	87		92		22X1.5	29
2.0	*280/B22/C22/D22/G22/H22/J32/K32 290/A42/B22/B42/B44/C22/C42/C44 D42/G22/G42/G44/J32/K32/K42*	E	1971	XN1T, XN1TA	M		+ Cable	11/81 ▸ 04/92	126411	**819764**	87		92		22X1.5	29
2.0	*290/A42/B22/B42/B44/C22/C42/C44/D42 G22/G42/G44/J32/K32/K42*	E	1971	XN1T, XN1TA	M			05/92 ▸ 02/94	126435	**819774**	87		92		22X1.5	29
1.9 D	*280/B62/C82, 290/A62/B62/C02/G62 M62/R62*	D	1905	XUD9A	M		+ Cable	07/87 ▸ 04/92	126410	**819828**	83	87	88	92	22X1.5	29
1.9 D	*290/A62/B62/C02/G62/M62/R62*	D	1905	XUD9A	M			09/90 ▸ 02/94	126430	**820030**	84		95			
1.9 TD	*290/A72/B72/C72/D72/G72 H72/V72*	D	1929	M705	M		+ Cable	09/90 ▸ 04/92	126410	**819828**	83	87	88	92	22X1.5	29
1.9 TD	*290/A72/B72/C72/D72/G72 H72/V72*	D	1929	M705	M			05/92 ▸ 02/94	126430	**820030**	84		95			
2.5 D,2.5 TD	*280/A51/B52/B92/C51/C52 C92/C94/D52/G52/G92/H52 H92/J52/J92/K92/L92/X54 28B/52D/92D, 2G921D, 290 B52/B54/B92/B94/C52/C54 C92/C94/G52/G54/G92/G94 J52/J92/K52/K92*	D	2500	CRD93L, CRD93(651), CRD93LS CRD93(661)	M		+ Cable	11/81 ▸ 04/92	126410	**819828**	83	87	88	92	22X1.5	29
2.5 D,2.5 TD	*290/B52/B54/B92/B94/C52 C54/C92/C94/G52/G54/G92 G94/J52/J92/K52/K92*	D	2500	CRD93LS, CRD93L	M			05/92 ▸ 02/94	126430	**820030**	84		95			
J7																
1.5	*J7B*	E	1468	XB5P	M			06/65 ▸ 07/70	024212	**819758**	68		82		22X1.5	29
1.6	*J7PZ10, J7C//P/S/T*	E	1618	XC5P, XC7P	M			09/65 ▸ 08/79	024212	**819758**	68		82		22X1.5	29
1.8	*J7E/, J7F//P/S/T, J7P/W20/W25/X20 X23/X24/Y20/Y26/Y27/Y28/Z20/Z21/Z22*	E	1796	XM7P	M			07/70 ▸ 01/80	024212	**819758**	68		82		22X1.5	29
1.8 D	*J7AD*	D	1816	XDP85	M			06/65 ▸ 09/67	024212	**819758**	68		82		22X1.5	29
2.0 D	*J7GD, J7PZ30, J7B/D/D8/DP/DS/DT*	D	1984	XDP88	M			09/65 ▸ 07/78	024212	**819758**	68		82		22X1.5	29
2.1 D	*J7B/D/D8/DP/DS/DT, J7H/D/DP/DS/DT J7P/W40/W45/X40/X43/X44/Y40/Y46 Y47/Y48/Z40/Z41/Z42/Z50*	D	2112	XDP90	M			09/67 ▸ 01/80	024212	**819758**	68		82		22X1.5	29
2.3 D	*J7P/W60/W65/X60/X63/X64/Y60/Y66/Y67 Y68/Z60/Z61/Z62*	D	2304	XD2P94	M			07/77 ▸ 01/80	024212	**819758**	68		82		22X1.5	29
J9																
1.6	*888A10*	E	1618	XC7P	M			01/80 ▸ 1991	024212	**819758**	68		82		22X1.5	29
2.0	*888/A30/A31/A33/A35/A39/B31/C30/C33 C39/D33/D35/D39*	E	1971	XN1P	M			01/80 ▸ 1991	024212	**819758**	68		82		22X1.5	29
2.1 D	*888A60*	D	2112	XDP90	M			01/80 ▸ 07/90	024212	**819758**	68		82		22X1.5	29
2.3 D	*888/A70/A71/A73/A75/A79/B71/C70/C73 C76/C79/D73/D75/D79*	D	2304	XD2P	M			01/80 ▸ 07/82	024212	**819758**	68		82		22X1.5	29
2.5 D	*888/A70/A71/A73/A75/A79/B71/C70/C73 C76/C79/D73/D75/D79*	D	2498	XD3P	M			08/82 ▸ 1991	024212	**819758**	68		82		22X1.5	29

• **New** Nouveau **Nuevo** Novo **Nuovo** Nieuw **Neu** Yeni Новый Nou

			Type Ctr.		cc		AC			OE	Valeo	(°)C T1	T2	T3	T4	COD.	mm	
PEUGEOT (.../...)																			
P4																			
2.5 D	VP4A50, CP4/A50/C50	D		2498	XD3	M			1986 ▸	126415	**819744**	82		92		22X1.5	29	
Partner (96>2002)																			
1.1 i,1.1 i GPL	5AH/DZA/DZE, 5DHDZE, 5BH DZD/DZE, 5FH/DZD/DZE	E		1124	TU1M+	M	+/-		06/96 ▸ 11/02	126440	**819752**	92		97		22X1.5	29	
1.4,1.4 i,1.4 i GPL	5BK/5A2/5AG/6C2/FXD/FXE 5EK5AG, 5CK/FXD/FXE, 5FK 5A2/5AG/6C2/FXD/FXE	E		1360	TU3JP, TU3.2	M	+/-		01/00 ▸ 11/02	126440	**819752**	92		97		22X1.5	29	
1.8 i	5FLFXE	E		1761	XU7JB	M	-		05/97 ▸ 11/02	126440	**819752**	92		97		22X1.5	29	
1.8 D	5CA9AD, 5FA9AD, 5BA/9A2/9AD/9AG	D		1769	XUD7	M	+/-		06/96 ▸ 09/96	126445	**819747**	92	96	97	101	22X1.5	29	
1.8 D	5FA9AD, 5BA/9A2/9AD/9AG	D		1769	XUD7	M	+/-		10/96 ▸ 11/02	126443	**819753**	91		93		22X1.5	29	
1.9 D	5FWJZE, 5BW/JZE/JZT	D		1868	DW8	M	-		10/98 ▸ 11/02	126443	**819753**	91		93		22X1.5	29	
1.9 D	5CD9BD, 5BD/9BD/JYE, 5FD/9BD/JYE	D		1905	XUD9A	M	+/-		06/96 ▸ 09/96	126445	**819747**	92	96	97	101	22X1.5	29	
1.9 D	5CD9BD, 5BD/9BD/JYE, 5FD/9BD/JYE	D		1905	XUD9A	M	+/-		10/96 ▸ 11/02	126443	**819753**	91		93		22X1.5	29	
2.0 HDi	5CRHYF, 5BR/HYF, 5FR/HYF HYU	D		1997	DW10TD	M	-		05/00 ▸ 11/02	126443	**819753**	91		93		22X1.5	29	
Ranch (96>2002)																			
1.4 i	5BKFXD, 5FKFXE	E		1360	TU3JP	M	-		06/96 ▸	126440	**819752**	92		97		22X1.5	29	
1.8 i	5FLFXE	E		1761	XU7JB	M	-		07/97 ▸	126440	**819752**	92		97		22X1.5	29	
1.8 D	5BA9AD	D		1769	XUD7	M	-		06/96 ▸ 09/96	126445	**819747**	92	96	97	101	22X1.5	29	
1.8 D	5BA9AD	D		1769	XUD7	M	-		10/96 ▸	126443	**819753**	91		93		22X1.5	29	
1.9 D	5BWJZE, 5CWJZE	D		1868	DW8	M	-		01/99 ▸	126443	**819753**	91		93		22X1.5	29	
1.9 D	5CD9BD, 5FDJYE, 5BD/9BD	D		1905	XUD9A	M	-		06/96 ▸ 09/96	126445	**819747**	92	96	97	101	22X1.5	29	
1.9 D	5CD9BD, 5FDJYE, 5BD/9BD	D		1905	XUD9A	M	-		10/96 ▸	126443	**819753**	91		93		22X1.5	29	
PORSCHE																			
944																			
2.5	945013, 945042	E		2479	M44.01, M44.07, M44.40	M			06/81 ▸ 07/88	94460648100	**819759**	87		92		22X1.5	29	
2.5	945012	E		2479	M44.07, M44.01	A			06/81 ▸ 07/88	823959481F	**819759**	87		92		22X1.5	29	
2.7	945027	E		2681	M44.11	M			09/88 ▸ 08/89	94460648100	**819759**	87		92		22X1.5	29	
RENAULT																			
R4																			
1.1 GPL	R112, R237, 210/B	G		1108	688	M			09/75 ▸ 1992	7700759441	**819744**	82		92		22X1.5	29	
0.8	R210	E		845	B1B, 800	M			07/65 ▸ 06/86	7700759441	**819744**	82		92		22X1.5	29	
1.0	R112	E		956	C1C	M			07/86 ▸ 1990	7700759441	**819744**	82		92		22X1.5	29	
1.1	R112, R210, 3C2/3, R243, R23/7/9	E		1108	C1E, 688	M			07/75 ▸ 1992	7700759441	**819744**	82		92		22X1.5	29	
R5																			
0.8	R122	E		782	839	M			01/72 ▸ 06/81	7700759441	**819744**	82		92		22X1.5	29	
0.9	R122, R238, 139/1	E		845	800	M			07/72 ▸ 06/85	7700759441	**819744**	82		92		22X1.5	29	
1.0	R122, R238, 139/2	E		956	689	M			01/72 ▸ 06/85	7700759441	**819744**	82		92		22X1.5	29	
1.1	1397, 2387, 122/7	E		1108	688, C1E	M			07/79 ▸ 06/85	7700759441	**819744**	82		92		22X1.5	29	
1.3	122/9, R122, 139/4/5/6/9	E		1289	810	M			07/73 ▸ 06/85	7700759441	**819744**	82		92		22X1.5	29	
1.3	1395, R122	E		1289	810	A			07/75 ▸ 06/85	7700759441	**819744**	82		92		22X1.5	29	
1.4,1.4 Turbo	1399, 8220, R122, 122/9/B	E		1397	C7K, 840, C2J, C6J, 847	M			07/75 ▸ 06/85	7700759441	**819744**	82		92		22X1.5	29	
1.4	1229, 1399	E		1397	847	A			07/80 ▸ 06/85	7700759441	**819744**	82		92		22X1.5	29	
Super 5																			
0.9	C400, S400, B40/0	E		956	C1C	M			06/84 ▸ 06/87	7700759441	**819744**	82		92		22X1.5	29	
0.9	B400, C400	E		956	C1C	M			06/87 ▸ 12/92	7700782503	**819745**	82		92		22X1.5	29	
1.1	C401, S401, B40/1	E		1108	C1E	M			06/84 ▸	7700759441	**819744**	82		92		22X1.5	29	
1.1	B40/1/H, S401, C40/1/H	E		1108	C1E	M			07/85 ▸	7700782503	**819745**	82		92		22X1.5	29	
1.2	C40F, S40F, B40/F	E		1237	C1G	M			06/86 ▸ 08/90	7700782503	**819745**	82		92		22X1.5	29	
1.2	B40F	E		1237	C1G	M			06/86 ▸ 08/90	7700759441	**819744**	82		92		22X1.5	29	
1.4,1.4 Turbo,1.4 i	B40/2/3/7, S407, C40/2/3 5/7	E		1397	C3J, C1J, C2J	M			07/84 ▸	7700759441	**819744**	82		92		22X1.5	29	
1.4,1.4 Turbo,1.4 i	B40/2/3/7/J/M, S407, C40 2/3/5/7/J/M	E		1397	C3J, C2J, C1J	M			07/85 ▸	7700782503	**819745**	82		92		22X1.5	29	

• **New** Nouveau **Nuevo** Novo **Nuovo** Nieuw **Neu** Yeni Новый Nou

		Type Ctr.		CC			AC				OE	Valeo	(°)C T1	T2	T3	T4	COD.	mm	
RENAULT (.../...)																			
Super 5 (.../...)																			
1.4 Turbo	C405	E	1397	C1J		M			06/88 ▸ 08/90	6001023839	**819756**	68		78		22X1.5	29	
1.4	B403, C403	E	1397	C2J		A			07/84 ▸ 05/87	7700759441	**819744**	82		92		22X1.5	29	
1.4	B40/3/J, C40/3/J	E	1397	C2J		A			06/87 ▸ 08/90	7700782503	**819745**	82		92		22X1.5	29	
1.7	B408	E	1721	F3N		M			06/86 ▸ 05/87	7700759441	**819744**	82		92		22X1.5	29	
1.7	B40/8, C40/8/9	E	1721	F3N		M			06/86 ▸ 08/90	7700782503	**819745**	82		92		22X1.5	29	
1.7	B40/G/K, C40/G/K	E	1721	F2N		M		+ Cable	06/87 ▸ 08/90	6006001590	**819782**	82		92		22X1.5	29	
1.7	B408, C408	E	1721	F3N		A			06/86 ▸ 08/90	7700782503	**819745**	82		92		22X1.5	29	
1.7	B408	E	1721	F3N		A			06/86 ▸ 05/87	7700759441	**819744**	82		92		22X1.5	29	
1.6 D	C404, S404, B40/4	D	1595	F8M		M			06/85 ▸	7700759441	**819744**	82		92		22X1.5	29	
1.6 D	C404, S404, B40/4	D	1595	F8M		M			07/85 ▸	7700782503	**819745**	82		92		22X1.5	29	
R6																			
1.1	R118	E	1108	688		M			10/69 ▸ 1980	7700759441	**819744**	82		92		22X1.5	29	
R9																			
1.1	L421	E	1108	C1E		M	+/-		10/81 ▸ 05/87	7700759441	**819744**	82		92		22X1.5	29	
1.2	L42S	E	1237	C1G		M	+/-		07/85 ▸ 05/87	7700759441	**819744**	82		92		22X1.5	29	
1.2	L42S	E	1237	C1G		M	+/-		06/87 ▸ 09/88	7700782503	**819745**	82		92		22X1.5	29	
1.4	L423	E	1397	C2J		M	+/-	+ Cable	06/87 ▸ 12/88	7700777685	**819782**	82		92		22X1.5	29	
1.4,1.4 Turbo	L42/2/3/5/C/J/R	E	1397	C2J, C1J		M			10/81 ▸ 05/87	7700759441	**819744**	82		92		22X1.5	29	
1.4,1.4 Turbo	L42/2/3/5/A/C/J/R	E	1397	C2J, C1J, C3J		M			07/86 ▸ 12/88	7700782503	**819745**	82		92		22X1.5	29	
1.4	L423	E	1397	C2J		A	+/-		10/81 ▸ 05/87	7700759441	**819744**	82		92		22X1.5	29	
1.4	L423	E	1397	C2J		A	+/-	+ Cable	06/87 ▸ 1988	7700777685	**819782**	82		92		22X1.5	29	
1.4	L423	E	1397	C2J		A			05/87 ▸ 1988	7700782503	**819745**	82		92		22X1.5	29	
1.7	L42/6/E/F/L/N	E	1721	F2N, F3N		M	+/-		09/83 ▸ 05/87	7700759441	**819744**	82		92		22X1.5	29	
1.7	L42/6/D/E/F/L/N	E	1721	F3N, F2N		M	+/-		06/87 ▸ 12/88	7700782503	**819745**	82		92		22X1.5	29	
1.7	L426	E	1721	F2N		A	+/-		09/87 ▸ 12/88	7700782503	**819745**	82		92		22X1.5	29	
1.6 D	L424	D	1595	F8M		M	+/-		10/82 ▸ 05/87	7700759441	**819744**	82		92		22X1.5	29	
1.6 D	L424	D	1595	F8M		M	+/-		06/87 ▸ 12/88	7700782503	**819745**	82		92		22X1.5	29	
R11																			
1.4 GPL	B373	G	1397	C2J		M	+/-		07/84 ▸ 05/87	7700759441	**819744**	82		92		22X1.5	29	
1.4 GPL	B373	G	1397	C2J		M	+/-	+ Cable	05/87 ▸ 07/87	7700777685	**819782**	82		92		22X1.5	29	
1.4 GPL	B373	G	1397	C2J		M			05/87 ▸ 07/87	7700782503	**819745**	82		92		22X1.5	29	
1.7 GPL	B376	G	1721	F2N		M	+/-		07/83 ▸ 05/87	7700759441	**819744**	82		92		22X1.5	29	
1.7 GPL	B376	G	1721	F2N		M	+/-		05/87 ▸ 07/89	7700782503	**819745**	82		92		22X1.5	29	
1.1	C371, S371, B37/1	E	1108	C1E		M	+/-		07/82 ▸ 05/87	7700759441	**819744**	82		92		22X1.5	29	
1.1	C371	E	1108	C1E		M	-		06/87 ▸ 06/86	7700782503	**819745**	82		92		22X1.5	29	
1.2	C37S, S37S, B37/S	E	1237	C1G		M	-		07/84 ▸ 05/87	7700759441	**819744**	82		92		22X1.5	29	
1.2	C37S, S37S, B37/S	E	1237	C1G		M	-		05/87 ▸ 07/89	7700782503	**819745**	82		92		22X1.5	29	
1.4,1.4 Turbo,1.4 i	B37/2/3/5/A/C/R/S, C37/2 3/5/A/C/R	E	1397	C1J, C2J, C3J		M	+/-, -		05/87 ▸ 07/89	7700782503	**819745**	82		92		22X1.5	29	
1.4,1.4 Turbo	B37/2/3/5/C/S, C37/2/3/5 C/R, S37/2/3	E	1397	C1J, C2J		M	+/-		07/82 ▸ 05/87	7700759441	**819744**	82		92		22X1.5	29	
1.4	B373, C373	E	1397	C2J		M	+/-	+ Cable	05/87 ▸ 07/89	7700777685	**819782**	82		92		22X1.5	29	
1.4	B373, C373	E	1397	C2J		A	+/-		07/82 ▸ 05/87	7700759441	**819744**	82		92		22X1.5	29	
1.4	B373, C373	E	1397	C2J		A	+/-	+ Cable	05/87 ▸ 07/89	7700777685	**819782**	82		92		22X1.5	29	
1.4	B373, C373	E	1397	C2J		A			05/87 ▸ 07/89	7700782503	**819745**	82		92		22X1.5	29	
1.7,1.7 i	B37/6/F/L/N, C37/6/E/F/L N	E	1721	F3N, F2N		M	+/-		07/83 ▸ 05/87	7700759441	**819744**	82		92		22X1.5	29	
1.7,1.7 i	B37/6/D/E/F/L/N, C37/6/D E/F/L/N	E	1721	F2N, F3N		M	+/-		05/87 ▸ 07/89	7700782503	**819745**	82		92		22X1.5	29	
1.7	B376	E	1721	F2N		A	+/-		06/87 ▸ 07/89	7700782503	**819745**	82		92		22X1.5	29	
1.6 D	C374, S374, B37/4	D	1595	F8M		M	+/-		07/83 ▸ 05/87	7700759441	**819744**	82		92		22X1.5	29	
1.6 D	C374, S374, B37/4	D	1595	F8M		M	+/-		05/87 ▸ 07/89	7700782503	**819745**	82		92		22X1.5	29	
R12																			
1300	R117, R133	E	1289	810		M			09/72 ▸ 1980	7700759441	**819744**	82		92		22X1.5	29	
1300	R117, R133	E	1289	810		A			09/72 ▸ 1980	7700759441	**819744**	82		92		22X1.5	29	
R14																			
1.2	121/0/1	E	1218	145, 129		M			04/76 ▸ 1984	7700759441	**819744**	82		92		22X1.5	29	

• **New** Nouveau **Nuevo** Novo **Nuovo** Nieuw **Neu** Yeni Новый Nou

RENAULT (.../...)

R14 (.../...)

1.2,1.4	*121/2/3*	E	1360	X5J, 150	M			09/79 ▸ 1984	7700759441	**819744**	82		92		22X1.5	29

R16

1600	*R115*	E	1565	821, 807	M			03/68 ▸ 1979	7700759441	**819744**	82		92		22X1.5	29
1600	*R115*	E	1565	807, 821	A			03/68 ▸ 1976	7700759441	**819744**	82		92		22X1.5	29
1650	*R115*	E	1647	843	M			10/73 ▸ 1980	7700759441	**819744**	82		92		22X1.5	29
1650	*R115*	E	1647	843, 841	A			10/73 ▸ 1980	7700759441	**819744**	82		92		22X1.5	29

R18

1.4	*134/0/9, 2350, 135/0/9*	E	1397	847	M			09/77 ▸ 1986	7700759441	**819744**	82		92		22X1.5	29
1.4	*1340*	E	1397	847	A			03/79 ▸ 1986	7700759441	**819744**	82		92		22X1.5	29
1.6 Turbo,1.6 i Turbo	*134/5/A, 135/5/A*	E	1565	A5L, A7L	M			09/80 ▸ 1986	7700759441	**819744**	82		92		22X1.5	29
1.6,1.6 i	*134/1/2, 135/1/2/8*	E	1647	A6M, 843, A2M, 841	M			04/78 ▸ 1986	7700759441	**819744**	82		92		22X1.5	29
1.6,1.6 i	*134/1/2, 135/1/2/8*	E	1647	841, 843, A6M	A			07/79 ▸ 1986	7700759441	**819744**	82		92		22X1.5	29
2.0	*1343, 1353*	E	1995	J6R	M			09/81 ▸ 1986	7700759441	**819744**	82		92		22X1.5	29
2.0	*1343, 1353*	E	1995	J6R	A			09/81 ▸ 10/86	7700759441	**819744**	82		92		22X1.5	29
2.2 Turbo	*135B*	E	2165	J7T	M			07/83 ▸ 06/86	7700759441	**819744**	82		92		22X1.5	29
2.2 Turbo	*135B*	E	2165	J7T	A			07/83 ▸ 1986	7700759441	**819744**	82		92		22X1.5	29
2.1 D,2.1 TD Turbo	*134/4/6, 2354, 135/4/6*	D	2068	852, J8S	M			07/80 ▸ 1986	7700759441	**819744**	82		92		22X1.5	29
2.1 D	*1344, 1354*	D	2068	J8S	A			07/80 ▸ 1986	7700759441	**819744**	82		92		22X1.5	29

R19

1.2 e	*C53W, L53W, B53/W*	E	1171	E7F	M			05/92 ▸ 10/95	7700782503	**819745**	82		92		22X1.5	29
1.2	*C530, L530, S530, B53/0*	E	1237	C1G	M			07/88 ▸ 10/95	7700782503	**819745**	82		92		22X1.5	29
1.4,1.4 GPL	*C537, L537, S537, B53/7*	E	1390	E6J	M		+ Cable	07/88 ▸ 05/89	7700796048	**819783**	82		92		22X1.5	29
1.4,1.4 GPL,1.4 e,1.4 i	*B53/5/7/A/G, C53/5/7/A S537, L53/5/7/A/G*	E	1390	E7J, E6J	M			06/89 ▸ 11/95	7700782503	**819745**	82		92		22X1.5	29
1.4	*C537, L537, B53/7*	E	1390	E6J	A		+ Cable	07/88 ▸ 05/89	7700796048	**819783**	82		92		22X1.5	29
1.4,1.4 e,1.4 i	*B53/7/A, C53/7/A, L53/7/A*	E	1390	E7J, E6J	A			06/89 ▸ 11/95	7700782503	**819745**	82		92		22X1.5	29
1.4,1.4 e,1.4 i	*B53/1/2/H/P, C53/1/2/P S532, L53/1/2/H/P*	E	1397	C1J, C2J, C3J	M			07/88 ▸ 10/95	7700782503	**819745**	82		92		22X1.5	29
1.7,1.7 i	*B53/3/6/B/C/E/F/M, D53C C53/3/B/C/E/F/M, L53/3/6 B/C/F*	E	1721	F2N, F3N	M			07/88 ▸ 11/95	7700782503	**819745**	82		92		22X1.5	29
1.7,1.7 i	*B53/3/B/C, D53C, C53/3/B C, L53/3/B/C*	E	1721	F3N, F2N	A			07/88 ▸ 11/95	7700782503	**819745**	82		92		22X1.5	29
1.8 16V,1.8 i 16V	*B53/9/D, D53D, C53/9/D L53/9/D*	E	1763	F7P	M			07/88 ▸ 10/95	7700782503	**819745**	82		92		22X1.5	29
1.8 i	*353/A/C/D, 453/A/C/D/H, 553/A/C/D/H 853/A/C, B53/8/Y, D53Y, C53/8/Y L53/8/Y*	E	1794	F3P	M			05/92 ▸ 11/95	7700782503	**819745**	82		92		22X1.5	29
1.8 i	*353/F, 453/F/H, 853F, B53Y, 553/F/H C53/V/Y, D53/V/Y, L53/V/Y*	E	1794	F3P	A			05/92 ▸ 11/95	7700782503	**819745**	82		92		22X1.5	29
1.9 D,1.9 TD	*B53/4/I/J/K, C53/4/J/K L53/4/I/J/K/Z, S53/4/K*	D	1870	F8Q	M	+/-		07/88 ▸ 10/95	7700809773	**820215**	82	95	92	100	22X1.5	29
1.9 D,1.9 TD	*B53/4/I/J/K/T, C53/4/I/J K/T/Z, L53/4/I/J/K/T/Z S53/4/I/J/K*	D	1870	F8Q	M	+/-		07/88 ▸ 10/95	7700782503	**819745**	82		92		22X1.5	29

R20

1.6	*R127*	E	1647	843	M			12/75 ▸ 12/81	7700759441	**819744**	82		92		22X1.5	29
1.6	*R127*	E	1647	843	A			12/75 ▸ 12/81	7700759441	**819744**	82		92		22X1.5	29
2.0	*R127*	E	1995	829	M			07/77 ▸ 1984	7700759441	**819744**	82		92		22X1.5	29
2.0	*R127*	E	1995	829	A			07/77 ▸ 1984	7700759441	**819744**	82		92		22X1.5	29
2.2	*R127*	E	2165	851	M			07/80 ▸ 1984	7700759441	**819744**	82		92		22X1.5	29
2.2	*R127*	E	2165	851	A			07/80 ▸ 1984	7700759441	**819744**	82		92		22X1.5	29

R21

1.4	*K48U, B48/D, L48/D/U*	E	1397	C2J, C2L	M	+/-		06/88 ▸ 1994	7700782503	**819745**	82		92		22X1.5	29
1.4	*K48U*	E	1397	C2L	M	+	+ Cable	06/88 ▸ 04/89	7700777683	**819781**	82	82	92	96	22X1.5	29
1.4	*K48U*	E	1397	C2L	M	+		05/89 ▸ 11/92	7700798264	**820033**	82	82	92	96	22X1.5	29
1.4	*B48U, L48U*	E	1397	C2L	A			06/88 ▸ 03/92	7700782503	**819745**	82		92		22X1.5	29

• **New** Nouveau **Nuevo** Novo **Nuovo** Nieuw **Neu** Yeni Новый Nou

RENAULT (.../...)

R21 (.../...)

1.7,1.7 i	B48/1/2/4/E/F, K48/1/2/4 E/F/M/N, L48/1/2/E/F/M/N S48/1/2	E	1721	F2N, F3N	M	+/-		06/86 ▸	7700782503	**819745**	82		92		22X1.5	29
1.7	K48/1/2/M/N, S48/1/2	E	1721	F2N	M	+	+ Cable	06/87 ▸ 04/89	7700777683	**819781**	82	82	92	96	22X1.5	29
1.7	K48/1/2/4/M, S48/1/2	E	1721	F2N	M	+		05/89 ▸	7700798264	**820033**	82	82	92	96	22X1.5	29
1.7	L48/1/2	E	1721	F2N	M			03/86 ▸ 07/86	7700759441	**819744**	82		92		22X1.5	29
1.7,1.7 i	K48/1/2/E/F, L48/1/2/E/F S48/1/2	E	1721	F2N, F3N	M		+ Cable	06/86 ▸ 06/87	7700777685	**819782**	82		92		22X1.5	29
1.7,1.7 i	B48/2/E, L48/2/E	E	1721	F3N, F2N	A			06/88 ▸ 04/93	7700782503	**819745**	82		92		22X1.5	29
2.0	K48J	E	1965	F2R	M	-	+ Cable	06/86 ▸ 05/87	7700777685	**819782**	82		92		22X1.5	29
2.0	K48J	E	1965	F2R	M	-		06/87 ▸ 05/91	7700782503	**819745**	82		92		22X1.5	29
2.0,2.0 i Turbo	K48/3/C/R/S, L48/5/L	E	1995	J7R, J6T	M	+/-	+ Cable	06/86 ▸ 03/93	7700782694	**819781**	82	82	92	96	22X1.5	29
2.0,2.0 i,2.0 i Turbo	K48/3/S, L48/3/5	E	1995	J6T, J7R	M	+/-	+ Cable	06/86 ▸ 03/92	6006001590	**819782**	82		92		22X1.5	29
2.0	K489	E	1995	J6R	M	+/-		05/89 ▸ 03/92	7700798264	**820033**	82	82	92	96	22X1.5	29
2.0,2.0 i	B48/3/C/R/Y, K48/3/9/C/R L48/3/C/Q/R/Y	E	1995	J7R, J6R	M	- +/-		06/86 ▸ 08/95	7700782503	**819745**	82		92		22X1.5	29
2.0 i	L483	E	1995	J7R	M			03/86 ▸ 07/86	7700759441	**819744**	82		92		22X1.5	29
2.0,2.0 i	B48/3/C, K48/3/9/C, L48/3 C	E	1995	J7R, J6R	A	+/-,-		06/87 ▸ 08/95	7700782503	**819745**	82		92		22X1.5	29
2.0,2.0 i	L483, K48/3/S	E	1995	J6T, J7R	A	+/-	+ Cable	07/86 ▸ 04/89	6006001590	**819782**	82		92		22X1.5	29
2.0	K489	E	1995	J6R	A	+/-		05/89 ▸ 03/92	7700798264	**820033**	82	82	92	96	22X1.5	29
2.0	K48/3/C/S	E	1995	J7R, J6T	A	+	+ Cable	06/88 ▸ 04/92	7700782694	**819781**	82	82	92	96	22X1.5	29
2.2,2.2 i	K48K, L48K, B48/K	E	2165	J7T	M	+/-		06/87 ▸	7700782503	**819745**	82		92		22X1.5	29
2.2	K48K	E	2165	J7T	M	-	+ Cable	06/86 ▸ 05/87	7700777683	**819781**	82	82	92	96	22X1.5	29
2.2,2.2 i	K48K, L48K	E	2165	J7T	M		+ Cable	06/86 ▸ 05/87	6006001590	**819782**	82		92		22X1.5	29
2.2,2.2 i	K48K, L48K, B48/K	E	2165	J7T	A	+/-		06/87 ▸	7700782503	**819745**	82		92		22X1.5	29
2.2 i	L48K	E	2165	J7T	A		+ Cable	08/86 ▸ 05/87	6006001590	**819782**	82		92		22X1.5	29
1.9 D	K48H, L48H, S48H, B48/H	D	1870	F8Q	M	+/-		05/89 ▸ 03/93	7700782503	**819745**	82		92		22X1.5	29
2.1 D,2.1 TD	B48/0/6/7/8/P/V/W, K48/0 6/7/8/P/V/W, L48/0/6/7/8 P/V, S48/0/6/V	D	2068	J8S	M	+/-		06/86 ▸	7700782503	**819745**	82		92		22X1.5	29
2.1 D,2.1 TD	B48/0/V, L480, K48/0/6/7 8/P/V/W, S48/0/6/V	D	2068	J8S	M	+	+ Cable	06/86 ▸	7700782694	**819781**	82	82	92	96	22X1.5	29
2.1 D,2.1 TD	K48/6/8, S486, L48/6/8	D	2068	J8S	M		+ Cable	06/86 ▸ 05/87	7700777685	**819782**	82		92		22X1.5	29

R25

2.0	B29/7/H	E	1995	J6R, J7R	M			09/83 ▸ 06/87	7700759441	**819744**	82		92		22X1.5	29
2.0	B29/2/4/7/H	E	1995	J7R, J6R	M			07/87 ▸ 1992	7700782503	**819745**	82		92		22X1.5	29
2.0	B297	E	1995	J6R	A			09/83 ▸ 06/87	7700759441	**819744**	82		92		22X1.5	29
2.0	B29/2/7/H	E	1995	J6R, J7R	A			07/87 ▸ 1992	7700782503	**819745**	82		92		22X1.5	29
2.2	B29/B/E	E	2165	J7T	M	+/-		09/83 ▸ 06/87	7700759441	**819744**	82		92		22X1.5	29
2.2	B29/B/E	E	2165	J7T	M	+/-		06/87 ▸ 1992	7700782503	**819745**	82		92		22X1.5	29
2.2	B29E	E	2165	J7T	M	+	+ Cable	07/87 ▸ 1992	7700777683	**819781**	82	82	92	96	22X1.5	29
2.2	B29E	E	2165	J7T	A	+/-	+ Cable	06/86 ▸ 1992	7700777683	**819781**	82	82	92	96	22X1.5	29
2.2	B29/B/E	E	2165	J7T	A	+/-		06/87 ▸ 1992	7700782503	**819745**	82		92		22X1.5	29
2.2	B29/B/E	E	2165	J7T	A			09/83 ▸ 06/87	7700759441	**819744**	82		92		22X1.5	29
2.5 V6 Turbo	B295	E	2458	Z7U	M			09/85 ▸ 06/87	7700759441	**819744**	82		92		22X1.5	29
2.5 V6 Turbo	B295	E	2458	Z7U	M			07/87 ▸ 1992	7700782503	**819745**	82		92		22X1.5	29
2.5 V6 Turbo	B29G	E	2458	Z7U	M		+ Cable	06/89 ▸ 1992	7700777683	**819781**	82	82	92	96	22X1.5	29
2.6 V6 Injection	B298	E	2664	Z7V	M			09/83 ▸ 06/87	7700759441	**819744**	82		92		22X1.5	29
2.6 V6 Injection	B298	E	2664	Z7V	M			07/87 ▸ 05/88	7700782503	**819745**	82		92		22X1.5	29
2.6 V6 Injection	B298	E	2664	Z7V	A			09/83 ▸ 06/87	7700759441	**819744**	82		92		22X1.5	29
2.6 V6 Injection	B298	E	2664	Z7V	A			07/87 ▸ 05/89	7700782503	**819745**	82		92		22X1.5	29
2.8 V6 Injection	B29A	E	2849	Z7W	M	+	+ Cable	09/85 ▸ 05/88	7700777683	**819781**	82	82	92	96	22X1.5	29
2.8 V6 Injection	B29A	E	2849	Z7W	M			09/85 ▸ 06/87	7700759441	**819744**	82		92		22X1.5	29
2.8 V6,2.8 V6 Injection	B29/3/A/F	E	2849	Z7W	M			06/87 ▸ 1992	7700782503	**819745**	82		92		22X1.5	29
2.1 D,2.1 TD	B29/0/6	D	2068	J8S	M			09/83 ▸ 1992	7700759441	**819744**	82		92		22X1.5	29
2.1 TD	B29W	D	2068	J8S	M		+ Cable	06/89 ▸ 1992	7700777683	**819781**	82	82	92	96	22X1.5	29

Alpine A310

2.7	2700	E	2664	112	M			07/76 ▸ 1984	7700759441	**819744**	82		92		22X1.5	29

Alpine GT D500

2.5 V6 Turbo	D501	E	2458	Z7U	M	+	+ Cable	07/87 ▸ 1991	7700777683	**819781**	82	82	92	96	22X1.5	29

• **New** Nouveau **Nuevo** Novo **Nuovo** Nieuw **Neu** Yeni Новый Nou

Valeo

Thermoswitch
Thermocontact
Termocontacto
Termocontato
Termocontatto
Thermokontakt
Thermoschalter

Włącznik wentylatora
Tepelný spínač
Termokapcsoló
Termocontact
Fan müşiri
ТЕРМОДАТЧИК

		Type Ctr.		cc			AC			OE	Valeo	(°)C T1	T2	T3	T4	COD.	mm	
RENAULT (.../...)																				
Alpine GT D500 (.../...)																				
2.5 V6 Turbo	*D501*	E	2458	Z7U	M	-		09/84 ▸ 07/87	7700759441	**819744**	82		92		22X1.5	29				
2.5 V6 Turbo	*D501*	E	2458	Z7U	M	-	+ Cable	07/87 ▸ 1991	6006001590	**819782**	82		92		22X1.5	29				
2.8 V6	*D500*	E	2849	Z6W	M	+	+ Cable	07/87 ▸ 07/89	7700777683	**819781**	82	82	92	96	22X1.5	29				
2.8 V6	*D500*	E	2849	Z6W	M	-		09/84 ▸ 07/87	7700759441	**819744**	82		92		22X1.5	29				
2.8 V6	*D500*	E	2849	Z6W	M	-	+ Cable	07/87 ▸ 07/89	6006001590	**819782**	82		92		22X1.5	29				
Clio (90>98)																				
-	*557W*	L	0	2BD	M	+/-		03/96 ▸ 02/98	7700782503	**819745**	82		92		22X1.5	29				
1.0	*B570, C570*	E	956	C1C	M			06/90 ▸ 12/93	7700782503	**819745**	82		92		22X1.5	29				
1.1	*C571, S571, B57/1*	E	1108	C1E	M			06/90 ▸ 02/96	7700782503	**819745**	82		92		22X1.5	29				
1.2 i	*357/K/Y, 657K, 557/K/Y*	E	1149	D7F	M	+/-		03/96 ▸ 02/98	7700782503	**819745**	82		92		22X1.5	29				
1.2,1.2 i	*357/F/G/J/L, 557/F/G/J/L R, B57/2/A/N/R/S, C57/2/A R/S, S57/2/A/R*	E	1171	E7F, E5F	M	+/-		06/90 ▸ 02/98	7700782503	**819745**	82		92		22X1.5	29				
1.2 i	*C577, S577, B57/7*	E	1239	C3G	M			07/94 ▸ 02/96	7700782503	**819745**	82		92		22X1.5	29				
1.4,1.4 i	*557/B, B57/3/B/J/P/T/Y C57/3/B/J/T/Y*	E	1390	E6J, E7J	M			06/90 ▸ 02/98	7700782503	**819745**	82		92		22X1.5	29				
1.4,1.4 i	*B57/3/B/J/T, C57/3/B/J/T*	E	1390	E6J, E7J	A			06/90 ▸ 02/98	7700782503	**819745**	82		92		22X1.5	29				
1.7	*B574, C574*	E	1721	F2N	M	+/-	+ Cable	06/90 ▸ 02/96	7700796048	**819783**	82		92		22X1.5	29				
1.8 i 16S	*C57/5/D*	E	1763	F7P	M			03/91 ▸ 02/96	7700782503	**819745**	82		92		22X1.5	29				
1.8 i	*557U, 357/E, B57/C/U, C57/9/C/H/U*	E	1794	F3P	M	+/-	+ Cable	09/90 ▸ 02/98	7700796048	**819783**	82		92		22X1.5	29				
1.8 i	*557U, B57C, 357/E/U/V, C57/C/H*	E	1794	F3P	M			06/94 ▸ 02/98	7700782503	**819745**	82		92		22X1.5	29				
1.8 i	*357/A/D, B578, C578, 557/D/U*	E	1794	F3P	A		+ Cable	01/94 ▸ 02/98	7700796048	**819783**	82		92		22X1.5	29				
1.8 i	*557U, B578, C578, 357/A/U*	E	1794	F3P	A			03/96 ▸ 02/98	7700782503	**819745**	82		92		22X1.5	29				
2.0 i	*C57M*	E	1998	F7R	M			05/93 ▸ 02/96	7700782503	**819745**	82		92		22X1.5	29				
1.9 D	*557N, 357/N, 657/H/M/N, B57/6/I/L C57/6/I/L, S57/6/I/L*	D	1870	F8Q	M			06/90 ▸ 02/98	7700782503	**819745**	82		92		22X1.5	29				
Clio II (98>2001)																				
1.9 D	*CB0E, BB0/E, SB0/E/J/R*	D	1870	F8Q	M			03/98 ▸ 03/01	7700782503	**819745**	82		92		22X1.5	29				
Clio II (2001>)																				
1.2 GPL,1.2 i	*BB1K, CB0A, SB0A, BB0/A*	G	1149	D7F	M	+/-		04/01 ▸	7700782503	**819745**	82		92		22X1.5	29				
1.0 i	*BB0Y*	E	999	D7D	M	+		04/01 ▸	7700782503	**819745**	82		92		22X1.5	29				
1.2 i,1.2 i 16V	*BB0/5/A/F/W, BB2D, BB1/0 1/K, CB0/5/A/F/W, CB2D CB1/0/1/K, SB10, SB0/A/F*	E	1149	D7F, D4F	M	+/-		04/01 ▸	7700782503	**819745**	82		92		22X1.5	29				
1.4 i,1.4 i 16V	*BB0/B/C/L/P/S, BB1/3/7/L CB0/B/C/L/P/S, CB1/3/7/L*	E	1390	K4J, E7J, K7J	M	+		04/01 ▸	7700782503	**819745**	82		92		22X1.5	29				
1.4 i,1.4 i 16V	*BB0/L/P/S, BB1/3/L, CB0/L P/S, CB1/3/L*	E	1390	K4J, E7J	A	+/-		04/01 ▸	7700782503	**819745**	82		92		22X1.5	29				
1.6 i,1.6 i 16V	*BB0/0/1/D/H/T, BB1/4/D/J CB0/D/H/T, CB1/4/D*	E	1598	K7M, K4M	M	+/-		04/01 ▸	7700782503	**819745**	82		92		22X1.5	29				
1.6 i,1.6 i 16V	*BB0/D, CB0D, BB1/4/D/R CB1/4/D*	E	1598	K4M, K7M	A	+/-		04/01 ▸	7700782503	**819745**	82		92		22X1.5	29				
2.0 i 16V	*CB0/M, CB1/5/C/N/S*	E	1998	F4R	M	+		04/01 ▸	7700782503	**819745**	82		92		22X1.5	29				
1.5 dCi	*BB0/7/8, CB0/7/8, SB0/7/8 9*	D	1461	K9K	M	+/-		04/01 ▸	7700782503	**819745**	82		92		22X1.5	29				
1.9 D,1.9 dTi	*BB2C, BB0/2/E/J/U/V, CB2C CB0/E/J/U/V, SB0/E/J/R/U*	D	1870	F8Q, F9Q	M	+		04/01 ▸	7700782503	**819745**	82		92		22X1.5	29				
Espace (84>91)																				
2.0	*S112, J11/2/6*	E	1995	J6R, J7R	M			09/84 ▸ 1991	7700782503	**819745**	82		92		22X1.5	29				
2.2	*J117*	E	2165	J7T	M			09/86 ▸ 1991	7700782503	**819745**	82		92		22X1.5	29				
2.1 TD	*S115, J11/4/5*	D	2068	J8S	M			09/84 ▸ 1991	7700759441	**819744**	82		92		22X1.5	29				
Espace II (91>96)																				
2.1 dT	*J63305, J63325, S63535*	E	2068	J8S.6.10, J8S.6.12, J8S.7.72 J8S.7.76,J8S.7.78	M	-		05/93 ▸ 05/96	6025106008	●**820830**	82		87		22X1.5					
Espace III (96>2000)																				
2.0 i	*JE0A*	E	1998	F3R	M	+/-		09/96 ▸ 06/00	7700839072	**820032**	78	82	88	92	22X1.5	29				
2.0 i,2.0 i 16V	*JE0/A/N*	E	1998	F4R, F3R	M	+/-		09/96 ▸ 06/00	7700782503	**819745**	82		92		22X1.5	29				
2.0 i	*JE0A*	E	1998	F3R	A	+/-		09/96 ▸ 06/00	7700839072	**820032**	78	82	88	92	22X1.5	29				

• **New** Nouveau **Nuevo** Novo **Nuovo** Nieuw **Neu** Yeni Новый Nou

		Type Ctr.		CC		AC			OE	Valeo	(°)C T1	T2	T3	T4	COD.	mm	
RENAULT (.../...)																				
Espace III (96>2000) (.../...)																				
2.0 i	JE0A	E	1998	F3R		A	+/-		10/96 ▸ 04/97	7700782503	**819745**	82		92		22X1.5	29
3.0 i V6	JE0D	E	2963	Z7X		A			09/96 ▸ 06/98	7700839072	**820032**	78	82	88	92	22X1.5	29
1.9 dTi	JE0M	D	1870	F9Q		M			1999 ▸ 06/00	7700782503	**819745**	82		92		22X1.5	29
2.2 dT	JE0/E/H/P	D	2188	G8T		M	+		10/96 ▸ 06/00	7700839072	**820032**	78	82	88	92	22X1.5	29
Espace III (2000>2002)																				
2.0 i 16V	JE0L	E	1998	F4R		A	-		07/00 ▸ 10/02	7700782503	**819745**	82		92		22X1.5	29
3.0 i V6	JE0G	E	2946	L7X		A			07/00 ▸ 10/02	7700421969	**820032**	78	82	88	92	22X1.5	29
Fuego																				
1.4	R136	E	1397	847		M			09/79 ▸ 1985	7700759441	**819744**	82		92		22X1.5	29
1.6 Turbo,1.6 i Turbo	R136	E	1565	A5L, A7L		M			07/81 ▸ 06/85	7700759441	**819744**	82		92		22X1.5	29
1.6	R136	E	1647	843, A6M, A2M		M			09/79 ▸ 1985	7700759441	**819744**	82		92		22X1.5	29
1.6	R136	E	1647	A6M, 843		A			09/79 ▸ 1985	7700759441	**819744**	82		92		22X1.5	29
2.0	136B, R136	E	1995	829, J7R		M			09/80 ▸ 1985	7700759441	**819744**	82		92		22X1.5	29
2.0	R136	E	1995	J6R		A			09/80 ▸ 1985	7700759441	**819744**	82		92		22X1.5	29
2.2,2.2 Turbo	136B, R136	E	2165	J7T		M			07/83 ▸ 06/85	7700759441	**819744**	82		92		22X1.5	29
2.2	136B, R136	E	2165	J7T		A			07/83 ▸ 06/85	7700759441	**819744**	82		92		22X1.5	29
2.1 TD	1366	D	2068	J8S		M			09/82 ▸ 1984	7700759441	**819744**	82		92		22X1.5	29
Laguna (94>98)																				
1.8 i	B56/0/A/B/S/T/Z	E	1794	F3P		M			01/94 ▸ 04/98	7700782503	**819745**	82		92		22X1.5	29
2.0 i 16V	B56M	E	1948	N7Q		M			05/95 ▸ 04/98	7700839072	**820032**	78	82	88	92	22X1.5	29
2.0 i 16V	B56D	E	1948	N7Q		M			05/95 ▸ 12/96	7700782503	**819745**	82		92		22X1.5	29
2.0 i	B56N	E	1998	F3R		M			01/94 ▸ 04/98	7700839072	**820032**	78	82	88	92	22X1.5	29
2.0 i	B56/C/H/L	E	1998	F3R		M			01/94 ▸ 04/98	7700782503	**819745**	82		92		22X1.5	29
2.0 i	B56/C/H/L	E	1998	F3R		A			01/94 ▸ 04/98	7700782503	**819745**	82		92		22X1.5	29
2.0 i	B56N	E	1998	F3R		A			01/94 ▸ 04/98	7700839072	**820032**	78	82	88	92	22X1.5	29
3.0 i V6	B56V	E	2946	L7X		M			05/97 ▸ 04/98	7700421969	**820032**	78	82	88	92	22X1.5	29
3.0 i V6	B56V	E	2946	L7X		A			07/97 ▸ 04/98	7700421969	**820032**	78	82	88	92	22X1.5	29
3.0 i V6	B56E	E	2963	Z7X		M			01/94 ▸ 12/96	7700421969	**820032**	78	82	88	92	22X1.5	29
3.0 i V6	B56/5/R	E	2963	Z7X		A			01/94 ▸ 04/98	7700421969	**820032**	78	82	88	92	22X1.5	29
2.2 D,2.2 Dt	B56/2/6/9/F/P	D	2188	G8T		M			03/94 ▸ 04/98	7700839072	**820032**	78	82	88	92	22X1.5	29
Laguna (98>2000)																				
1.8 i GPL	B560	G	1794	F3P		M	+		05/98 ▸ 12/00	7700421969	**820032**	78	82	88	92	22X1.5	29
1.8 i GPL	B560	G	1794	F3P		M			05/98 ▸ 12/00	7700782503	**819745**	82		92		22X1.5	29
1.8 i 16V	B56/3/4/Y	E	1783	F4P		M	+/-		09/98 ▸ 12/00	7700782503	**819745**	82		92		22X1.5	29
1.8 i	B560	E	1794	F3P		M	+		09/99 ▸ 12/00	7700421969	**820032**	78	82	88	92	22X1.5	29
1.8 i	B560	E	1794	F3P		M			09/99 ▸ 12/00	7700782503	**819745**	82		92		22X1.5	29
2.0 i 16V	B56M	E	1948	N7Q		M			05/98 ▸ 12/00	7700839072	**820032**	78	82	88	92	22X1.5	29
2.0 i	B56L	E	1998	F3R		M	+		05/98 ▸ 12/00	7700421969	**820032**	78	82	88	92	22X1.5	29
2.0 i,2.0 i 16V	556A, B56L	E	1998	F3R, F4R		M			05/98 ▸ 12/00	7700782503	**819745**	82		92		22X1.5	29
2.0 i	B56/L/U	E	1998	F3R		A			05/98 ▸ 12/00	7700782503	**819745**	82		92		22X1.5	29
3.0 i V6	B56V	E	2946	L7X		M	+		05/98 ▸ 12/00	7700839072	**820032**	78	82	88	92	22X1.5	29
3.0 i V6	B56V	E	2946	L7X		A	+		05/98 ▸ 12/00	7700839072	**820032**	78	82	88	92	22X1.5	29
1.9 dTi	B56J	D	1870	F9Q		M			05/98 ▸ 12/00	7700782503	**819745**	82		92		22X1.5	29
2.2 dT	B569	D	2188	G8T		M			05/98 ▸ 12/00	7700839072	**820032**	78	82	88	92	22X1.5	29
Laguna Nevada (95>98)																				
1.8 i	K56/0/S/T/Z	E	1794	F3P		M	+		07/95 ▸ 04/98	7700839072	**820032**	78	82	88	92	22X1.5	29
1.8 i	K56/0/S/T/Z	E	1794	F3P		M			07/95 ▸ 04/98	7700782503	**819745**	82		92		22X1.5	29
2.0 i 16V	K56/D/M	E	1948	N7Q		M	+		07/95 ▸	7700839072	**820032**	78	82	88	92	22X1.5	29
2.0 i 16V	K56/D/M	E	1948	N7Q		M			07/95 ▸ 04/98	7700782503	**819745**	82		92		22X1.5	29
2.0 i	K56/C/H/L/N	E	1998	F3R		M	+/-		07/95 ▸ 04/98	7700839072	**820032**	78	82	88	92	22X1.5	29
2.0 i	K56/C/H/L	E	1998	F3R		M			07/95 ▸ 04/98	7700782503	**819745**	82		92		22X1.5	29
2.0 i	K56/C/H/L/N	E	1998	F3R		A	+/-		07/95 ▸ 04/98	7700839072	**820032**	78	82	88	92	22X1.5	29
2.0 i	K56/C/H/L	E	1998	F3R		A			07/95 ▸ 04/98	7700782503	**819745**	82		92		22X1.5	29
3.0 i V6	K56V	E	2946	L7X		M	+/-		05/97 ▸ 04/98	7700839072	**820032**	78	82	88	92	22X1.5	29
3.0 i V6	K56V	E	2946	L7X		A	+/-		07/97 ▸ 04/98	7700839072	**820032**	78	82	88	92	22X1.5	29
3.0 i V6	K56/5/R	E	2963	Z7X		A			02/96 ▸ 04/98	7700421969	**820032**	78	82	88	92	22X1.5	29
2.2 D,2.2 dT	K56/2/6/9/F, S56/6/F	D	2188	G8T		M			07/95 ▸ 04/98	7700839072	**820032**	78	82	88	92	22X1.5	29
Laguna Nevada (98>2000)																				
1.8 i GPL	K560	G	1794	F3P		M	+		05/98 ▸ 12/00	7700421969	**820032**	78	82	88	92	22X1.5	29

• **New** Nouveau **Nuevo** Novo **Nuovo** Nieuw **Neu** Yeni Новый Nou

		Type Ctr.		cc		AC		2 3	OE	Valeo	(°)C T1	T2	T3	T4	COD.	mm				

RENAULT (.../...)

Laguna Nevada (98>2000) (.../...)

1.8 i GPL	K560	G	1794	F3P	M			05/98 ▸ 12/00	7700782503	**819745**	82		92		22X1.5	29
1.8 i 16V	K56/3/4/Y	E	1783	F4P	M	-		05/98 ▸ 12/00	7700782503	**819745**	82		92		22X1.5	29
1.8 i	K560	E	1794	F3P	M	+		05/99 ▸ 12/00	7700421969	**820032**	78	82	88	92	22X1.5	29
1.8 i	K560	E	1794	F3P	M			05/99 ▸ 12/00	7700782503	**819745**	82		92		22X1.5	29
2.0 i 16V	K56M	E	1948	N7Q	M	+/-		05/98 ▸ 12/00	7700782503	**819745**	82		92		22X1.5	29
2.0 i	K56L	E	1998	F3R	M	+/-		05/98 ▸ 12/00	7700782503	**819745**	82		92		22X1.5	29
2.0 i	K56L	E	1998	F3R	M	+		05/98 ▸ 12/00	7700421969	**820032**	78	82	88	92	22X1.5	29
2.0 i	K56L	E	1998	F3R	A	+/-		05/98 ▸ 12/00	7700782503	**819745**	82		92		22X1.5	29
1.9 dTi	K56J, S56J	D	1870	F9Q	M			05/98 ▸ 12/00	7700782503	**819745**	82		92		22X1.5	29
2.2 dT	K569	D	2188	G8T	M			05/98 ▸ 12/00	7700839072	**820032**	78	82	88	92	22X1.5	29

Lutecia (Jap)

1.4 i	B57B	E	1390	E7J	M	+/-		03/96 ▸ 02/98	7700782503	**819745**	82		92		22X1.5	29
1.8 i	357A, 557A	E	1794	F3P	A	+/-	+ Cable	10/94 ▸ 02/98	7700796048	**819783**	82		92		22X1.5	29
1.8 i	357A, 557A	E	1794	F3P	A			03/96 ▸ 02/98	7700782503	**819745**	82		92		22X1.5	29

Mégane (95>99)

1.4 i	BA0/E/T	E	1390	E7J	M	+/-		11/95 ▸ 02/99	7700782503	**819745**	82		92		22X1.5	29
1.4 i	BA0E	E	1390	E7J	M	+		11/95 ▸ 02/99	7700839072	**820032**	78	82	88	92	22X1.5	29
1.6 i	DA0F, EA0F, BA0/F/L/S	E	1598	K7M	M	+/-		11/95 ▸ 02/99	7700782503	**819745**	82		92		22X1.5	29
1.6 i	DA0F, EA0F, BA0/F/L/S	E	1598	K7M	M	+ -		11/95 ▸ 02/99	7700839072	**820032**	78	82	88	92	22X1.5	29
1.6 i	BA0F, DA0F	E	1598	K7M	A	+/-		11/95 ▸ 02/99	7700782503	**819745**	82		92		22X1.5	29
1.6 i	BA0F, DA0F	E	1598	K7M	A	+/-		11/95 ▸ 02/99	7700839072	**820032**	78	82	88	92	22X1.5	29
2.0 i,2.0 i 16V	BA0/7/G/H, DA0/G/H, EA0/G/H	E	1998	F7R, F3R	M	+ -		11/95 ▸ 02/99	7700839072	**820032**	78	82	88	92	22X1.5	29
2.0 i,2.0 i 16V	BA0/7/G/H, DA0/G/H, EA0/G/H	E	1998	F7R, F3R	M	- +		11/95 ▸ 02/99	7700782503	**819745**	82		92		22X1.5	29
2.0 i	DA0G, EA0G, BA0/7/G	E	1998	F3R	A	+/-		11/95 ▸ 02/99	7700839072	**820032**	78	82	88	92	22X1.5	29
2.0 i	DA0G, EA0G, BA0/7/G	E	1998	F3R	A	- +		11/95 ▸ 02/99	7700782503	**819745**	82		92		22X1.5	29
1.9 D,1.9 dT,1.9 dTi	DA0N, BA0/8/9/A/K/N/U/Y SA0/9/A/N/U/Y	D	1870	F8Q, F9Q	M	+/-		11/95 ▸ 02/99	7700839072	**820032**	78	82	88	92	22X1.5	29
1.9 dTi	DA0N, SA0N, BA0/8	D	1870	F9Q	M	+/-		07/96 ▸ 02/99	7700782503	**819745**	82		92		22X1.5	29
1.9 dTi	BA0N, DA0N	D	1870	F9Q	A	+/-		11/95 ▸ 02/99	7700839072	**820032**	78	82	88	92	22X1.5	29
1.9 dTi	DA0N	D	1870	F9Q	A			11/95 ▸ 06/97	7700782503	**819745**	82		92		22X1.5	29

Mégane (98>)

1.6 i,1.6 i 16V	BA0F, EA04	E	1598	K7M, K4M	M	+/-		02/99 ▸	7700782503	**819745**	82		92		22X1.5	29
1.6 i	BA0F	E	1598	K7M	M	-		02/99 ▸ 10/00	7700839072	**820032**	78	82	88	92	22X1.5	29
1.6 i	BA0F	E	1598	K7M	A	-		02/99 ▸ 10/00	7700839072	**820032**	78	82	88	92	22X1.5	29
1.6 i,1.6 i 16V	BA0F, DA04	E	1598	K7M, K4M	A	-		02/99 ▸ 05/01	7700782503	**819745**	82		92		22X1.5	29
1.9 d,1.9 dTi	DA0N, BA0/N/R, SA0N, KA0 J/N	D	1870	F9Q, F8Q	M	+/-		10/98 ▸ 03/01	7700839072	**820032**	78	82	88	92	22X1.5	29
1.9 D,1.9 dTi	DA0N, BA0/N/R, KA0/J/N SA0/N/R	D	1870	F9Q, F8Q	M	-		10/98 ▸ 03/99	7700782503	**819745**	82		92		22X1.5	29
1.9 dTi	DA0N, KA0N, BA0/N	D	1870	F9Q	A	+		10/98 ▸ 03/01	7700839072	**820032**	78	82	88	92	22X1.5	29
1.9 dTi	DA0N, KA0N, BA0/N	D	1870	F9Q	A	-		10/98 ▸ 03/99	7700782503	**819745**	82		92		22X1.5	29

Mégane Classic (96>99)

1.4 i	LA0/E/V	E	1390	E7J	M	+		09/96 ▸ 02/99	7700839072	**820032**	78	82	88	92	22X1.5	29
1.4 i	LA0/E/V	E	1390	E7J	M	-		09/96 ▸ 02/99	7700782503	**819745**	82		92		22X1.5	29
1.6 e	LA1C, LA0/F/L/S	E	1598	K7M	M	+		09/96 ▸ 02/99	7700839072	**820032**	78	82	88	92	22X1.5	29
1.6 e	LA1C, LA0/F/L/S	E	1598	K7M	M	-		09/96 ▸ 02/99	7700782503	**819745**	82		92		22X1.5	29
1.6 e	LA0F	E	1598	K7M	A	+		09/96 ▸ 02/99	7700839072	**820032**	78	82	88	92	22X1.5	29
1.6 e	LA0F	E	1598	K7M	A	-		09/96 ▸ 02/99	7700782503	**819745**	82		92		22X1.5	29
2.0 i	LA0/7/G	E	1998	F3R	M	+		09/96 ▸ 02/99	7700839072	**820032**	78	82	88	92	22X1.5	29
2.0 i	LA0/7/G	E	1998	F3R	M	-		09/96 ▸ 02/99	7700782503	**819745**	82		92		22X1.5	29
2.0 i	LA0/7/G	E	1998	F3R	A	+		09/96 ▸ 02/99	7700839072	**820032**	78	82	88	92	22X1.5	29
2.0 i	LA0/7/G	E	1998	F3R	A	-		09/96 ▸ 02/99	7700782503	**819745**	82		92		22X1.5	29
1.9 D,1.9 dT,1.9 dTi	LA1U, LA0/8/A/K/N/R/U/Y	D	1870	F9Q, F8Q	M	+/-		09/96 ▸ 02/99	7700839072	**820032**	78	82	88	92	22X1.5	29
1.9 dTi	LA1U, LA0/8/N	D	1870	F9Q	M	-		04/97 ▸ 02/99	7700782503	**819745**	82		92		22X1.5	29
1.9 dTi	LA0N	D	1870	F9Q	A	+		04/97 ▸ 02/99	7700839072	**820032**	78	82	88	92	22X1.5	29

• **New** Nouveau **Nuevo** Novo **Nuovo** Nieuw **Neu** Yeni Новый Nou

		Type Ctr.		CC		AC			OE	Valeo	(°)C T1	T2	T3	T4	COD.	☼: mm	
RENAULT (.../...)																			
Mégane Classic (96>99) (.../...)																			
1.9 dTi	LA0N	D	1870	F9Q	A	-		04/97 ▸ 02/99	7700782503	**819745**	82		92		22X1.5	29
Mégane Scénic (96>99)																			
1.4 i,1.4 i 16V	JA0/E/W	E	1390	E7J, K4J	M	+/-		10/96 ▸ 09/99	7700782503	**819745**	82		92		22X1.5	29
1.4 i,1.4 i 16V	JA0/E/W	E	1390	E7J, K4J	M	+/-		10/96 ▸ 09/99	7700839072	**820032**	78	82	88	92	22X1.5	29
1.6 i	JA0/F/L	E	1598	K7M	M	+/-		10/96 ▸ 09/97	7700782503	**819745**	82		92		22X1.5	29
1.6 i	JA0/F/L	E	1598	K7M	M	+		10/96 ▸ 09/99	7700839072	**820032**	78	82	88	92	22X1.5	29
1.6 i	JA0F	E	1598	K7M	A	+/-		10/96 ▸ 09/99	7700839072	**820032**	78	82	88	92	22X1.5	29
1.6 i	JA0F	E	1598	K7M	A	-		09/97 ▸ 09/99	7700782503	**819745**	82		92		22X1.5	29
2.0 i	JA0G	E	1998	F3R	M	+		10/96 ▸ 09/99	7700839072	**820032**	78	82	88	92	22X1.5	29
2.0 i	JA0G	E	1998	F3R	M	-		10/96 ▸ 09/99	7700782503	**819745**	82		92		22X1.5	29
2.0 i	JA0G	E	1998	F3R	A	+		10/96 ▸ 09/99	7700839072	**820032**	78	82	88	92	22X1.5	29
2.0 i	JA0G	E	1998	F3R	A	-		04/97 ▸ 09/99	7700782503	**819745**	82		92		22X1.5	29
1.9 dTi	JA0N	D	1870	F9Q	M	+/-		04/97 ▸ 09/99	7700782503	**819745**	82		92		22X1.5	29
1.9 D,1.9 dT,1.9 dTi	FA0/J/N/Y, JA0/J/K/N/Y	D	1870	F8Q, F9Q	M	+/-		10/96 ▸ 09/99	7700839072	**820032**	78	82	88	92	22X1.5	29
1.9 dTi	JA0N	D	1870	F9Q	A	+		04/97 ▸ 09/99	7700839072	**820032**	78	82	88	92	22X1.5	29
1.9 dTi	JA0N	D	1870	F9Q	A	+		04/97 ▸ 09/99	7700782503	**819745**	82		92		22X1.5	29
Safrane																			
2.0 i 16V	B54L	E	1948	N7Q	M	+		09/96 ▸ 11/00	7700782503	**819745**	82		92		22X1.5	29
2.0 i 16V	B54L	E	1948	N7Q	M			09/96 ▸ 11/00	7700798264	**820033**	82	82	92	96	22X1.5	29
2.0 i 16V	B54L	E	1948	N7Q	A			09/96 ▸ 04/00	7700798264	**820033**	82	82	92	96	22X1.5	29
2.0 Si,2.0 i	B54/0/2/E	E	1995	J7R	M	+/-		05/92 ▸ 09/96	7700798264	**820033**	82	82	92	96	22X1.5	29
2.0 Si,2.0 i	B54/0/2	E	1995	J7R	M	+		05/92 ▸ 09/96	7700839072	**820032**	78	82	88	92	22X1.5	29
2.0 Si,2.0 i	B54/0/2	E	1995	J7R	M	+		05/92 ▸ 09/96	7700782503	**819745**	82		92		22X1.5	29
2.0 Si,2.0 i	B54/0/2/E	E	1995	J7R	A	+/-		05/92 ▸ 09/96	7700798264	**820033**	82	82	92	96	22X1.5	29
2.0 Si,2.0 i	B54/0/2	E	1995	J7R	A	-		05/92 ▸ 09/96	7700839072	**820032**	78	82	88	92	22X1.5	29
2.2 Si,2.2 i	B54/1/3	E	2165	J7T	M	+/-		05/92 ▸ 09/96	7700839072	**820032**	78	82	88	92	22X1.5	29
2.2 Si,2.2 i	B54/1/3	E	2165	J7T	M	+		05/92 ▸ 09/96	7700782503	**819745**	82		92		22X1.5	29
2.2 Si,2.2 i	B54/1/3	E	2165	J7T	M	+		05/92 ▸ 09/96	7700798264	**820033**	82	82	92	96	22X1.5	29
2.2 i	B541	E	2165	J7T	A	+		05/92 ▸ 09/96	7700782503	**819745**	82		92		22X1.5	29
2.2 Si,2.2 i	B54/1/3	E	2165	J7T	A	+		05/92 ▸ 09/96	7700798264	**820033**	82	82	92	96	22X1.5	29
2.2 Si,2.2 i	B54/1/3	E	2165	J7T	A	-		05/92 ▸ 09/96	7700839072	**820032**	78	82	88	92	22X1.5	29
2.5 i 20V	B54F	E	2435	N7U	M			09/96 ▸ 11/00	7700798264	**820033**	82	82	92	96	22X1.5	29
2.5 i 20V	B54F	E	2435	N7U	A			09/96 ▸ 07/99	7700798264	**820033**	82	82	92	96	22X1.5	29
3.0 i	B54M	E	2963	Z7X	A			09/96 ▸ 12/98	7700798264	**820033**	82	82	92	96	22X1.5	29
3.0 i V6,3.0 i V6i 3.0 i V6i Biturbo	B54/4/5	E	2975	Z7X	M	+/-		05/92 ▸ 09/96	7700839072	**820032**	78	82	88	92	22X1.5	29
3.0 i V6,3.0 i V6i 3.0 i V6i Biturbo	B54/4/5	E	2975	Z7X	M	+/-		05/92 ▸ 09/96	7700798264	**820033**	82	82	92	96	22X1.5	29
3.0 i V6	B54/4/B/J	E	2975	Z7X	A	+/-		05/92 ▸ 09/96	7700798264	**820033**	82	82	92	96	22X1.5	29
3.0 i V6	B54/4/J	E	2975	Z7X	A	+/-		05/92 ▸ 09/96	7700839072	**820032**	78	82	88	92	22X1.5	29
2.1 Dt	B546	D	2068	J8S	M	+		05/92 ▸ 09/96	7700798264	**820033**	82	82	92	96	22X1.5	29
2.1 Dt	B546	D	2068	J8S	M	-		05/92 ▸ 09/96	7700782503	**819745**	82		92		22X1.5	29
2.2 TD	B54G	D	2188	G8T	M			09/96 ▸ 11/00	7700798264	**820033**	82	82	92	96	22X1.5	29
2.5 Dt	B548	D	2499	S8U	M	+/-		04/93 ▸ 09/96	7700798264	**820033**	82	82	92	96	22X1.5	29
2.5 Dt	B548	D	2499	S8U	A	+/-		04/93 ▸ 09/96	7700798264	**820033**	82	82	92	96	22X1.5	29
Twingo I (93>98)																			
1.2 i	S066	E	1149	D7F	A			09/96 ▸ 08/98	7700782503	**819745**	82		92		22X1.5	29
1.2 i ▸ 970324	S066, C06/6/7	E	1149	D7F	M	-	+ Cable	07/96 ▸ 03/97	7700796048	**819783**	82		92		22X1.5	29
1.2 i ▸ 970324	S066, C06/6/7	E	1149	D7F	A	-	+ Cable	07/96 ▸ 03/97	7700796048	**819783**	82		92		22X1.5	29
1.2	C06/3/4, S06/3/4	E	1239	C3G	M	-		03/93 ▸ 01/97	7700782503	**819745**	82		92		22X1.5	29
RENAULT																			
Express (85>91)																			
1.0	F400	E	956	C1C	M			09/85 ▸ 05/87	7700759441	**819744**	82		92		22X1.5	29
1.0	F400	E	956	C1C	M			06/87 ▸ 08/91	7700782503	**819745**	82		92		22X1.5	29
1.1	F401	E	1108	C1E	M			09/85 ▸ 05/87	7700759441	**819744**	82		92		22X1.5	29
1.1	F40/1/H	E	1108	C1E	M			06/87 ▸ 08/91	7700782503	**819745**	82		92		22X1.5	29

• **New** Nouveau **Nuevo** Novo **Nuovo** Nieuw **Neu** Yeni Новый Nou

			Type Ctr.		cc			AC		2 3	OE	Valeo	(°)C T1	T2	T3	T4	COD.	mm	
RENAULT (.../...)																			
Express (85>91) (.../...)																			
1.4,1.4 i	*F40/2/7*	E		1397	C3J, C1J	M			09/85 ▸ 05/87	7700759441	**819744**	82		92		22X1.5	29
1.4,1.4 i	*F40/2/7/M*	E		1397	C2J, C1J, C3J	M			06/87 ▸ 08/91	7700782503	**819745**	82		92		22X1.5	29
1.6 D	*F404*	D		1595	F8M	M			09/85 ▸ 05/87	7700759441	**819744**	82		92		22X1.5	29
1.6 D	*F404*	D		1595	F8M	M			05/87 ▸ 08/91	7700782503	**819745**	82		92		22X1.5	29
Express (91>)																			
1.1	*F40/1/T*	E		1108	C1E	M	+/-		09/91 ▸ 08/97	7700782503	**819745**	82		92		22X1.5	29
1.2	*F40F*	E		1237	C1G	M			09/91 ▸ 08/94	7700782503	**819745**	82		92		22X1.5	29
1.2 i	*F406*	E		1239	C3G	M			07/93 ▸ 08/97	7700782503	**819745**	82		92		22X1.5	29
1.4,1.4 i	*F40/A/D/S/U/V/Y*	E		1390	E6J, E7J	M			09/91 ▸ 08/97	7700782503	**819745**	82		92		22X1.5	29
1.4 i	*F40/S/U*	E		1390	E7J	A			09/91 ▸ 08/97	7700782503	**819745**	82		92		22X1.5	29
1.4 i	*F407*	E		1397	C3J	M	+		09/91 ▸ 08/94	7700782503	**819745**	82		92		22X1.5	29
1.6 D	*F404*	D		1595	F8M	M	+		09/91 ▸ 08/94	7700782503	**819745**	82		92		22X1.5	29
1.9 D	*F40/E/N/P/R*	D		1870	F8Q	M			09/91 ▸ 08/97	7700782503	**819745**	82		92		22X1.5	29
Extra (85>91)																			
1.0	*F400*	E		956	C1C	M			09/85 ▸ 05/87	7700759441	**819744**	82		92		22X1.5	29
1.0	*F400*	E		956	C1C	M			05/87 ▸ 08/91	7700782503	**819745**	82		92		22X1.5	29
1.1	*F401*	E		1108	C1E	M			09/85 ▸ 05/87	7700759441	**819744**	82		92		22X1.5	29
1.1	*F401*	E		1108	C1E	M			05/87 ▸ 08/91	7700782503	**819745**	82		92		22X1.5	29
1.4	*F402*	E		1397	C1J	M			09/85 ▸ 05/87	7700759441	**819744**	82		92		22X1.5	29
1.4	*F402*	E		1397	C1J	M			05/87 ▸ 08/91	7700782503	**819745**	82		92		22X1.5	29
1.6 D	*F404*	D		1595	F8M	M			09/85 ▸ 05/87	7700759441	**819744**	82		92		22X1.5	29
1.6 D	*F404*	D		1595	F8M	M			05/87 ▸ 08/91	7700782503	**819745**	82		92		22X1.5	29
Extra (91>97)																			
1.2	*F40F*	E		1237	C1G	M			09/91 ▸ 08/94	7700782503	**819745**	82		92		22X1.5	29
1.2 i	*F406*	E		1239	C3G	M			09/94 ▸ 08/97	7700782503	**819745**	82		92		22X1.5	29
1.4,1.4 i	*F40/A/U*	E		1390	E6J, E7J	M			09/91 ▸ 08/97	7700782503	**819745**	82		92		22X1.5	29
1.6 D	*F404*	D		1595	F8M	M			09/91 ▸ 08/94	7700782503	**819745**	82		92		22X1.5	29
1.9 D	*F40/E/N/R*	D		1870	F8Q	M			09/91 ▸ 08/97	7700782503	**819745**	82		92		22X1.5	29
Master (80>89)																			
2.0	*FB30, FC30*	E		1995	J5R	M			08/80 ▸ 02/89	7700759441	**819744**	82		92		22X1.5	29
2.0	*FB30, FC30*	E		1995	J5R	M			01/87 ▸ 02/89	7700748169	**819749**	75		85		22X1.5	29
870115 ▸																			
2.1 D	*FB30*	D		2068	J8S	M			08/80 ▸ 02/89	7700759441	**819744**	82		92		22X1.5	29
2.1 D	*FB30*	D		2068	J8S	M			08/80 ▸ 02/89	7700748169	**819749**	75		85		22X1.5	29
2.4 D	*FB30, FC30*	D		2445	S8U	M			08/80 ▸ 02/89	7700759441	**819744**	82		92		22X1.5	29
2.4 D	*FB30, FC30*	D		2445	S8U	M			08/80 ▸ 02/89	7700748169	**819749**	75		85		22X1.5	29
Master (89>94)																			
2.0	*QH92, QJ72, QJ92, R8D2, RC92, RF12 RH12, RH52, RH92, RJ12, RJ22, RJ52 RJ92, RL92, QH7/2*	E		1995	J5R	M		+ Cable	03/89 ▸ 09/94	7700777685	**819782**	82		92		22X1.5	29
2.1 D	*RF13*	D		2068	J8S	M		+ Cable	03/89 ▸ 09/94	7700777683	**819781**	82	82	92	96	22X1.5	29
2.5 D	*QH94, QHA4, QJ74, QJ94, QH7/4*	D		2445	S8U	M		+ Cable	03/89 ▸ 09/92	7700777683	**819781**	82	82	92	96	22X1.5	29
2.5 D,2.5 TD	*R8D/5/6, RH1/5/6, RH5/5/6 RH9/5/6, RJ1/5/6, RJ2/5 6, RJ5/5/6, RJ9/5/6*	D		2499	S9U, S8U	M		+ Cable	03/89 ▸ 09/94	7700777683	**819781**	82	82	92	96	22X1.5	29
Master (94>97)																			
2.2 i	*RC7E, RC9E, RD9E, RF1E, RH1E, RH2E RH5E, RH9E, RJ1E, RJ2E, RJ5E, RJ9E RL7E, RL9E, R8D/E*	E		2165	J7T	M		+ Cable	10/94 ▸ 09/97	7700777685	**819782**	82		92		22X1.5	29
2.5 D,2.5 TD	*R8D/G, RC7/G/H, RC9/G/H/J RD8/H/J, RF1G, RD9/G/H RH1/G/H/J, RH2/G/H, RH5 G/H, RH9/G/H/J, RJ1/G/H/J RJ2/G/H/J, RJ5/G/H/J RJ9/G/H/J, RL7/H/J, RL9 G/H/J*	D		2499	S8U, S9U	M			10/94 ▸ 09/97	7700798264	**820033**	82	82	92	96	22X1.5	29

• **New** Nouveau **Nuevo** Novo **Nuovo** Nieuw **Neu** Yeni Новый Nou

RENAULT (.../...)

Master (94>97) (.../...)

2.5 D,2.5 TD	R8D/G, RC7/G/H, RC9/G/H/J, RD8/H/J, RF1G, RD9/G/H, RH1/G/H/J, RH2/G/H, RH5 G/H, RH9/G/H/J, RJ1/G/H/J, RJ2/G/H/J, RJ5/G/H/J, RJ9/G/H/J, RL7/H/J, RL9 G/H/J	D	2499	S9U, S8U	M			10/94 ▸ 09/97	7700748169	**819749**	75		85		22X1.5	29

Master (97>2003)

2.5 D	ED0/A/E, FD0/A/E, HD0/A/E, JD0/A/E UD0/A/E	D	2499	S8U	M	+/-		09/97 ▸	7700300648	**820032**	78	82	88	92	22X1.5	29
2.5 D	FD0A, HD0A, JD0A, UD0A, ED0/A	D	2499	S8U	M			09/97 ▸ 09/03	7700782503	**819745**	82		92		22X1.5	29
2.8 dTi	FD0C, HD0C, JD0B, UD0C ED0/C	D	2800	S9W	M	+/-		01/98 ▸	7700782503	**819745**	82		92		22X1.5	29
2.8 dTi	FD0C, HD0C, JD0B, UD0C ED0/C	D	2800	S9W	M	+		01/98 ▸	7700839072	**820032**	78	82	88	92	22X1.5	29

Master Propulsion I (99>2004)

2.8 dCi 110,2.8 dCi 130 2.8 dCi 150	FH0/E/F/G, FH5/E/G, HH0/E F/G, HH5F, HH6E, HH1/E/F UH0/E/F/G, UH4G, UH5G UH1/E/F, UH6/E/F	D	2800	S9W	M	+/-		07/99 ▸ 06/04	7700300648	**820032**	78	82	88	92	22X1.5	29

Rapid (85>91)

1.0	F400	E	956	C1C	M			09/85 ▸ 05/87	7700759441	**819744**	82		92		22X1.5	29
1.0	F400	E	956	C1C	M			06/87 ▸ 08/91	7700782503	**819745**	82		92		22X1.5	29
1.1	F401	E	1108	C1E	M			09/85 ▸ 05/87	7700759441	**819744**	82		92		22X1.5	29
1.1	F40/1/H	E	1108	C1E	M			06/87 ▸ 08/91	7700782503	**819745**	82		92		22X1.5	29
1.4	F402	E	1397	C1J	M			09/85 ▸ 05/87	7700759441	**819744**	82		92		22X1.5	29
1.4,1.4 i	F40/2/7	E	1397	C1J, C3J	M			06/87 ▸ 08/91	7700782503	**819745**	82		92		22X1.5	29
1.6 D	F404	D	1595	F8M	M			09/85 ▸ 05/87	7700759441	**819744**	82		92		22X1.5	29
1.6 D	F404	D	1595	F8M	M			06/87 ▸ 08/91	7700782503	**819745**	82		92		22X1.5	29

Rapid II (91>97)

1.4 i	F40/D/U/V	E	1390	E7J	M	-		09/91 ▸ 03/98	7700782503	**819745**	82		92		22X1.5	29
1.9 D	F40/N/P	D	1870	F8Q	M	-		09/91 ▸ 03/98	7700782503	**819745**	82		92		22X1.5	29

Trafic (80>89)

1.4 GPL	T1X0	G	1397	847	M			07/80 ▸ 02/89	7700782503	**819745**	82		92		22X1.5	29
1.4	T1X0, T5X0	E	1397	847	M			07/80 ▸ 02/89	7700782503	**819745**	82		92		22X1.5	29
1.6,1.6 GPL	T3X1, T4V1, T4X1, T5W1 T5X1, T6W1, T9X1, TAX1 TAZ1, V5W1, V9X1, T3V/1	E	1647	A1M	M			07/80 ▸ 02/89	7700759441	**819744**	82		92		22X1.5	29
1.6	T3X1, T5X1, T9X1, TAX1, TAZ1, T3V/1	E	1647	A1M	A			07/80 ▸ 1986	7700759441	**819744**	82		92		22X1.5	29
1.7	T2W8, T3X8, T4V8, T4X8, T5W8, T5X8 TBZ8, P3X/8	E	1721	F1N	M			07/80 ▸ 05/88	7700759441	**819744**	82		92		22X1.5	29
1.7	T2W8, T3X8, T4V8, T4X8, T5W8, T5X8 TBZ8, P3X/8	E	1721	F1N	M			06/88 ▸ 02/89	7700782503	**819745**	82		92		22X1.5	29
2.0 F010074 ▸	PCX2, PCY2, T3V3, T5X2, T7W2, TBX2 TBZ2, V2W2, V4X2, V9X2, PAY/2	E	1995	J5R	M			▸ 02/89	7700782503	**819745**	82		92		22X1.5	29
2.0	T5X2, T7W2, TBX2, TBZ2, V2W2, V4X2 V9X2, T3V/3	E	1995	J5R	M			07/80 ▸ 05/88	7700759441	**819744**	82		92		22X1.5	29
2.0	T5X2, TBX2	E	1995	J5R	A			07/80 ▸ 05/88	7700759441	**819744**	82		92		22X1.5	29
2.0	T5X2, TBX2	E	1995	J5R	A			06/88 ▸ 02/89	7700782503	**819745**	82		92		22X1.5	29
2.1 D 591723 ▸	PAY3, PCY3, P3X/3	D	2068	852	M			▸ 02/89	7700782503	**819745**	82		92		22X1.5	29

Trafic (89>94)

1.4	T110, T120	E	1397	C1J	M	-		03/89 ▸ 06/91	7700782503	**819745**	82		92		22X1.5	29
1.7	P358, T118, T128, T2B8, T318, T328 T358, T418, T428, T558, T5B8, P31 8	E	1721	F1N	M	-		03/89 ▸ 09/94	7700782503	**819745**	82		92		22X1.5	29

• **New** Nouveau **Nuevo** Novo **Nuovo** Nieuw **Neu** Yeni Новый Nou

Valeo

Thermoswitch
Thermocontact
Termocontacto
Termocontato
Termocontatto
Thermokontakt
Thermoschalter

Włącznik wentylatora
Tepelný spínač
Termokapcsoló
Termocontact
Fan müşiri
ТЕРМОДАТЧИК

			Type Ctr.		cc		AC			OE	Valeo	(°)C T1	T2	T3	T4	COD.	mm	
RENAULT (.../...)																		
Trafic (89>94) (.../...)																		
2.0	*PC92, PCG2, T2B2, T552, T7B2, TB12 TB22, TB42, TB52, TB62, TB92, TE92 V312, V412, V422, V492, V5B2, PC8 2*	E		1995	J5R	M	-		03/89 ▸ 09/94	7700782503	**819745**	82		92		22X1.5	29	
2.2	*T35A, T5BA, T7BA, T7CA, TB1A, TB2A TB6A, TB9A, TC9A, TE1A, TE2A, TE9A V31A, V41A, V42A, V49A, V5BA, T31 A*	E		2165	J7T	M	-		03/89 ▸ 09/94	7700782503	**819745**	82		92		22X1.5	29	
2.1 D	*P313, P353*	D		2068	852	M	-	+ Cable	03/89 ▸ 09/94	6006001590	**819782**	82		92		22X1.5	29	
2.1 D	*P313, P353*	D		2068	852	M			03/89 ▸ 09/94	7700782503	**819745**	82		92		22X1.5	29	
2.5 D	*T2B/4, T41/4/B, T434, T554, T42/4/B T7B/4/B, TB1/4/B, TB34, TB44, TB54 TB64, TB2/4/B, TC94, TB9/4/B, V31 4/B, V42/4/B, V49/4/B, V5B/4/B*	D		2499	S8U	M	+/-	+ Cable	03/89 ▸ 09/94	6006001590	**819782**	82		92		22X1.5	29	
Trafic (95>97)																		
2.2 i	*T12E, T2BE, T31E, T32E, T35E, T41E T42E, T55E, T5BE, T7CE, TB1E, TB2E TB4E, TB5E, TB6E, TB9E, TC9E, TMBE V31E, V42E, V49E, V5BE, T11/E*	E		2165	J7T	M			10/94 ▸ 08/97	7700782503	**819745**	82		92		22X1.5	29	
2.2 i	*T12E, T2BE, T31E, T32E, T35E, T41E T42E, T55E, T5BE, T7CE, TB1E, TB2E TB4E, TB5E, TB6E, TB9E, TC9E, TMBE V31E, V42E, V49E, V5BE, T11/E*	E		2165	J7T	M		+ Cable	10/94 ▸ 08/97	6006001590	**819782**	82		92		22X1.5	29	
2.1 D	*PC9F, PCGF, T11F, T12F, T2BF, T31F T32F, T33F, T35F, T41F, T42F, T43F T55F, T5BF, TMBF, PC8/F*	D		2068	J8S	M			10/94 ▸ 08/97	7700782503	**819745**	82		92		22X1.5	29	
2.5 D	*TB1G, TB2G, TB3G, TB4G, TB5G, TB6G TB9G, TC7G, TC9G, TG1G, TH1G, TJ1G V31G, V42G, V49G, V5BG, T55/G*	D		2499	S8U	M			10/94 ▸ 08/97	7700782503	**819745**	82		92		22X1.5	29	
Trafic (97>2001)																		
1.9 D	*T55/J/L, TF1/J/L, TF2/J/L, TF3/J/L THB/J/L*	D		1870	F8Q	M			09/97 ▸ 03/01	7700782503	**819745**	82		92		22X1.5	29	
2.5 D	*T7BG, TB2G, TB9G, TC9M, T55/G/M TCJ/G/M, TF1/G/M, TF2/G/M, TF3/G/M V31/G/M, V5B/G/M*	D		2499	S8U	M			09/97 ▸ 03/01	7700782503	**819745**	82		92		22X1.5	29	
ROVER																		
45 (2004>)																		
2.0 Di	*RTMW, RTSW, RTC/L*	D		1994	20T2N	M	+/-		06/04 ▸ 04/05	KTP9017	•**820832**	88		96		22		
2.0 D	*RTC/L/W, RTM/L/W, RTS/L/W, RTZ/L/W*	D		1996	20T2N	M	+/-		06/04 ▸ 04/05	KTP9017	•**820832**	88		96		22		
200 (84>90)																		
213 800001 ▸	*XHSL, XHYL, XHM/L*	E		1342	EV	M			▸ 09/90	KTP9017	•**820832**	88		96		22		
213 800001 ▸	*XHYL*	E		1342	EV	A			▸ 09/90	KTP9017	•**820832**	88		96		22		
216	*XHWL, XHYL, XHZL, XHS/L*	E		1598	H16A,H16B,H16B-EFI	M			03/85 ▸ 09/90	KTP9017	•**820832**	88		96		22		
200 (95>99)																		
220	*RFH/W, RFM/M/W/Y*	D		1994	20T2N,20T2R	M			11/95 ▸ 11/99	KTP9017	•**820832**	88		96		22		
400 (95>)																		
420	*RTMW, RTSW, RTZW, RTC/W*	D		1994	20T2N,20T2R	M			11/95 ▸ 03/00	KTP9017	•**820832**	88		96		22		
Maestro																		
1.3	*XCHW, XCJW, XCMW, XCRW, XCSW, XCD/W*	E		1275	12H,12H959,12HA04,12HA20 12HC32,12HC34,12HE,12HF	M			03/83 ▸ 10/94	KTP9017	•**820832**	88		96		22		
1.6	*XCPW, XCSW, XCTW, XCWW, XCM/W*	E		1598	16H,16H956,16HA03,16HB77 16HC37,ROVE10	M			03/83 ▸ 04/92	KTP9017	•**820832**	88		96		22		
1.6	*XCSW*	E		1598	16H,16HA01,16HA36,16HC38	A			10/83 ▸ 04/92	KTP9017	•**820832**	88		96		22		

• **New** Nouveau **Nuevo** Novo **Nuovo** Nieuw **Neu** Yeni Новый Nou

		Type Ctr.		cc			AC			OE	Valeo	(°)C T1	T2	T3	T4	COD.	○: mm	
ROVER (.../...)																			
Maestro (.../...)																			
2.0,2.0 i,2.0 i Turbo	*XCTW*	E	1994	20HA50,20HA51,20HB63,20HC78	M			03/83 ▸ 11/91	KTP9017	●820832	88		96		22	
2.0 D,2.0 TD	*XCHW, XCMW, XCG/H*	D	1994	BA,BB	M			10/87 ▸ 01/95	KTP9017	●820832	88		96		22	
Montego																			
1300	*XEML, XESL, XEH/L*	E	1275	12HA37	M			05/84 ▸ 1992	GVS106	●820832	88		96		22	
1600	*XEM/L/M, XEWL, XES/L/M*	E	1598	16HA35,16HA35S	M			05/84 ▸ 12/94	GVS106	●820832	88		96		22	
2000,2000 Turbo,2000 i	*XEB/L, XEM/L/M, XES/L/M XEYL, XEW/L/M, XEZ/L/M*	E	1994	20HA,20HA30,20HA30/B43,20HA32, 20HB43 20HB59,20HB63,20HB69/B78,20HD55	M			05/84 ▸ 12/94	GVS106	●820832	88		96		22	
2000,2000 i	*XEYL, XEZL*	E	1994	20HA30,20HB55,20HB60	A			05/84 ▸ 1992	GVS106	●820832	88		96		22	
2000 TD	*XEZM, XES/L/M*	D	1994	BB	M			10/88 ▸ 12/94	GVS106	●820832	88		96		22	
SAAB																			
900 (79>93)																			
2.0,2.0 T Turbo 2.0 T Turbo 16V,2.0 i 2.0 i 16V	*AC/35D/45D/55D/75D, AE43S AD/35S/55S/75L/75S, AG 31S/33S/42S/51S/52S, AH 25J/35J, AL/35C/44C/45C AS33S, AM/25J/35J/45J 55J/55T, AT/34S/35L/35S 44S/45L/45S/54S/55L/55S 75L*	E	1985	B201I, B20T, B202I, B20S B202L, B20C, B202S, B201S B201C, B20I, B201T	M			10/80 ▸ 06/93	4086708	**819759**	87		92		22X1.5	29
2.0,2.0 T Turbo 2.0 T Turbo 16V,2.0 i 2.0 i 16V	*AC/36D/46D/56D/76D, AD 36S/56S/76L, AH26J, AL56C AE/43/66S, AM/36J/46J 56J, AT/36S/44/46S/56S*	E	1985	B201S, B202I, B20S, B202S B201I, B201C, B20I, B202L	A			10/81 ▸ 06/93	4086708	**819759**	87		92		22X1.5	29
9000																			
2.0 Turbo 16V,2.0 i 16V	*CC/45D/55D/65D/65J, CT55L CD/45L/55D/55L/55T/65D 65L, CX/45J/65J*	E	1985	B202I, B204I, B202L	M			06/84 ▸ 07/98	4086682	**820208**	110		115	0	22X1.5	29
2.0 Turbo 16V,2.0 i 16V	*CC/48D/58D/68D, CT58L, CD 48L/58L/68D, CX/45J/65J*	E	1985	B202I, B202L, B204I	A			06/84 ▸ 07/98	4086682	**820208**	110		115	0	22X1.5	29
2.3 T Turbo 16V,2.3 i 16V	*CC/45B/55B/65B, CD/45M 45U/55M/56M/65M/65R/65U CX/45B/45M/45U/65B/65M 65R/65U*	E	2290	B234I, B234L, B234E, B235R	M			01/90 ▸ 07/98	4086682	**820208**	110		115	0	22X1.5	29
2.3 T Turbo 16V,2.3 i 16V	*CC/48B/58B/68B, CD/48M 58M/68M/68U, CX/48M/68B 68M/68U*	E	2290	B234I, B234E, B234L	A			01/90 ▸ 07/98	4086682	**820208**	110		115	0	22X1.5	29
3.0 i V6	*CX/45W/65W*	E	2962	B308I	M			07/94 ▸ 07/98	4086682	**820208**	110		115	0	22X1.5	29
3.0 i V6	*CX/48W/68W*	E	2962	B308I	A			07/94 ▸ 07/98	4086682	**820208**	110		115	0	22X1.5	29
SEAT																			
Alhambra																			
1.8 i 20V,1.8 i Turbo 20V	*7V8/3J5/9J5, 7V9/3B3/5B3 9B3*	E	1781	AWC, AJH	M	+/-		06/00 ▸	1H0959481B	**820035**	84	91	95	102	22X1.5	29
1.8 i 20V,1.8 i Turbo 20V	*7V8/3J5/3J8, 7V9/3B9/5B9 9B9*	E	1781	AJH, AWC	A			06/00 ▸	1H0959481B	**820035**	84	91	95	102	22X1.5	29
2.0 i	*7V8/355/3S5/9S5, 7V9/2A3/3A3/5A3*	E	1984	ATM, ADY	M	+/-		06/00 ▸	1H0959481B	**820035**	84	91	95	102	22X1.5	29
2.0 i	*7V8/9S8, 7V9/2A8/3A8*	E	1984	ADY, ATM	A			06/00 ▸	1H0959481B	**820035**	84	91	95	102	22X1.5	29
2.8 i VR6 24V	*7V9/3D3/3D7/5D3/5D7/9D3 9D7*	E	2792	AUE, AYL	M	+/-		06/00 ▸	1H0959481B	**820035**	84	91	95	102	22X1.5	29
2.8 i VR6 24V	*7V9/3D7/3D9/5D7/5D9/9D7 9D9*	E	2792	AYL, AUE	A	+/-		06/00 ▸	1H0959481B	**820035**	84	91	95	102	22X1.5	29
1.9 TDi	*7V8/385/3X5/985/9X5, 7V9 2U3/3C3/3T3/3T7/3U3/5C3 5T3/5T7/9C3/9T3/9T7/9U3*	D	1896	AUY, ANU, ASZ, 1Z, AFN, AHU	M	+/-		06/00 ▸	1H0959481B	**820035**	84	91	95	102	22X1.5	29

• **New** Nouveau **Nuevo** Novo **Nuovo** Nieuw **Neu** Yeni Новый Nou

		Type Ctr.		cc		AC			OE	Valeo	(°)C T1	T2	T3	T4	COD.	mm	
SEAT (.../...)																	
Alhambra (.../...)																	
1.9 TDi	7V8/388/988, 7V9/3T7/3T9 5T9/9T7/9T9	D	1896	AFN, AUY	A			06/00 ▸	1H0959481B	**820035**	84	91	95	102	22X1.5	29	
Alhambra II (2003>)																	
1.8 i Turbo 20V	7V9/3B3/5B3/9B3	E	1781	AWC	M			06/03 ▸	1H0959481B	**820035**	84	91	95	102	22X1.5	29	
1.8 i Turbo 20V	7V9/3B9/5B9/9B9	E	1781	AWC	A			06/03 ▸	1H0959481B	**820035**	84	91	95	102	22X1.5	29	
2.0 i	7V9/3A3/5A3	E	1984	ATM	M			06/03 ▸	1H0959481B	**820035**	84	91	95	102	22X1.5	29	
2.0 i	7V9/2A8/3A8	E	1984	ATM	A			06/03 ▸	1H0959481B	**820035**	84	91	95	102	22X1.5	29	
2.8 i VR6 24V	7V9/3D3/3D7/5D3/5D7/9D3 9D7	E	2792	AYL	M			06/03 ▸	1H0959481B	**820035**	84	91	95	102	22X1.5	29	
2.8 i VR6 24V	7V9/3D9/5D9/9D9	E	2792	AYL	A			06/03 ▸	1H0959481B	**820035**	84	91	95	102	22X1.5	29	
1.9 TDi	7V9/363/3C3/3C7/3T3/3T7 3U3/563/5C3/5C7/5T3/5T7 963/9C3/9C7/9T3/9T7/9U3	D	1896	BTB, ANU, AUY, ASZ	M			06/03 ▸	1H0959481B	**820035**	84	91	95	102	22X1.5	29	
1.9 TDi	7V9/3T9/5T9/9T9	D	1896	AUY	A			06/03 ▸	1H0959481B	**820035**	84	91	95	102	22X1.5	29	
2.0 TDi 16V	7V9/353/383/553/583/953 983	D	1968	BRT	M			06/05 ▸	1H0959481B	**820035**	84	91	95	102	22X1.5	29	
Arosa																	
1.0 i	6H1/0A4/0B4/0C4/0H4/0H5/0L4/0W4/1B4	E	999	AHT, AUC, AER, ALD, ALL, ANV	M	-		02/97 ▸	867959481	**820034**	84		95		22X1.5	29	
1.0 i	6H10B4, 6H10H4, 6H10L4, 6H11B4 6H10W4, 6H10C4, 6H10H5	E	999	AER,ALD,ALL,ANV,AUC	M	+		02/97 ▸ 06/04	191919369A	●**820833**			120		20		
1.4 i,1.4 i 16V	6H1/0D4/0E4/0F4/0N4/0R4 0S4/0X4/1N4/2N4/3E4	E	1390	ANW, AKV, APQ, AQQ, AKK, AUB AUD, AFK, AEX	M	-		02/97 ▸	867959481	**820034**	84		95		22X1.5	29	
1.4 i	6H1/0D3/0F3/0S3/0X3/1N3/2N3	E	1390	AEX, AKV, AUD, APQ, AKK, ANW	A	-		02/97 ▸	867959481	**820034**	84		95		22X1.5	29	
1.4 i	6H11N3, 6H10S3, 6H10F3, 6H10D3 6H10X3, 6H12N3	E	1390	AEX,AKK,AKV,ANW,APQ,AUD	A	+		02/97 ▸ 06/04	191919369A	●**820833**			120		20		
1.4 i,1.4 i 16V	6H10N4, 6H10S4, 6H12N4 6H10X4, 6H10F4, 6H10D4 6H13E4, 6H11N4, 6H10E4 6H10R4	E	1390	AEX,AFK,AKK,AKV,ANW,APQ,AQQ AUB,AUD	M	+		02/97 ▸ 06/04	191919369A	●**820833**			120		20		
1.4 TDi	6H1/094/194/294	D	1422	AMF	M	-		10/99 ▸	867959481	**820034**	84		95		22X1.5	29	
1.4 TDi	6H1194, 6H1294, 6H1094	D	1422	AMF	M	+		10/99 ▸ 06/04	191919369A	●**820833**			120		20		
1.7 SDi	6H1/074/0M4/174	D	1716	AKU	M	-		08/97 ▸	867959481	**820034**	84		95		22X1.5	29	
1.7 SDi	6H10M4, 6H1174, 6H1074	D	1716	AKU	M	+		08/97 ▸ 10/03	191919369A	●**820833**			120		20		
1.4 TDi	6H1/094/194/294	D	1422	AMF	M	-		10/99 ▸ 06/04	6X0959481	**820302**	90		95		22X1.5	29	
Cordoba (2002>)																	
1.2 i 12V	6L2/2D4/3D4	E	1198	AZQ	M	+		10/02 ▸ 04/04	1J0959481A	●**820831**	85		90		22X1.5	29	
1.2 i 12V	6L2/2D4/3D4	E	1198	AZQ	M	+		10/02 ▸ 04/04	1J0959481	**820302**	90		95		22X1.5	29	
1.4 i 16V	6L2/3G4	E	1390	BKY	M	+/-		05/04 ▸ 06/06	1J0959481A	●**820831**	85		90		22X1.5	29	
1.4 i 16V	6L2/2G4/2H4/3G4/3H4/5G4 5H4	E	1390	BBY,BBZ	M	+		09/02 ▸	1J0959481A	●**820831**	85		90		22X1.5	29	
1.4 i 16V	6L2/2G3/3G3	E	1390	BBY	A	+		10/02 ▸ 04/04	1J0959481A	●**820831**	85		90		22X1.5	29	
1.4 i 16V	6L2/2G4/2H4/3G4/3H4/5G4 5H4	E	1390	BBY,BBZ	M	+		09/02 ▸ 11/09	1J0959481	**820302**	90		95		22X1.5	29	
1.4 i 16V	6L2/2G3/3G3	E	1390	BBY	A	+		10/02 ▸ 04/04	1J0959481	**820302**	90		95		22X1.5	29	
2.0 i	6L2/3L4/5L4	E	1984	BBX	M	+/-		04/03 ▸	1J0959481A	●**820831**	85		90		22X1.5	29	
2.0 i	6L2/2T4/3T4/5T4	E	1984	AZL	M	+		09/02 ▸	1J0959481A	●**820831**	85		90		22X1.5	29	
1.6 i	6L2/2K4/3K4	E	1598	BAH	M			04/03 ▸ 11/09	1J0959481	**820302**	90		95		22X1.5	29	
2.0 i	6L2/2T4/3T4/5T4	E	1984	AZL	M	+		09/02 ▸ 11/06	1J0959481	**820302**	90		95		22X1.5	29	
2.0 i	6L2L4	E	1984	BBX	M			04/03 ▸ 11/09	1J0959481	**820302**	90		95		22X1.5	29	
1.4 TDi	6L2/254/264/274/354/364 374/564/574	D	1422	BMS,BNM,BNV	M	+/-		05/05 ▸	1J0959481A	●**820831**	85		90		22X1.5	29	
1.4 TDi	6L2/204/304/504	D	1422	AMF	M	+		10/02 ▸ 12/05	1J0959481	**820302**	90		95		22X1.5	29	
1.9 TDi	6L2/224/324/336/524/536	D	1896	AXR,BLT	M	+/-		05/05 ▸ 06/06	1J0959481A	●**820831**	85		90		22X1.5	29	
1.9 SDi,1.9 TDi	6L2/214/224/314/324/336 524/536	D	1896	ASY,ASZ,ATD	M	+		09/02 ▸ 12/05	1J0959481	**820302**	90		95		22X1.5	29	
Cordoba (93>96)																	
1.4 i	6K2/2U2/2U3/2V2/3U2/3U3/3V2	E	1390	AEX	M			09/95 ▸ 06/96	191959481B	**819743**	84		94		22X1.5	29	
1.4 i ▸ TR-099 001	6K2/2U2/2U3/2V2/3U2/3U3/3V2	E	1390	AEX	M			11/95 ▸ 06/96	1H0959481B	**820035**	84	91	95	102	22X1.5	29	
1.4 i ▸ TR-099 000	6K2/2U2/2U3/2V2/3U2/3U3/3V2	E	1390	AEX	M			09/95 ▸ 11/95	191959481C	**819769**	84	91	95	102	22X1.5	29	

• **New** Nouveau **Nuevo** Novo **Nuovo** Nieuw **Neu** Yeni Новый Nou

SEAT (.../...)

Cordoba (93>96) (.../...)

1.4 i	6K2/2J1/2J2/2P1/2P2/2R1/2R2/3J1/3J2 3P1/3P2/3R1/3R2	E	1391	ABD	M			11/93 ▸ 11/95	191959481B	**819743**	84		94		22X1.5	29
1.4 i TR-099 001 ▸	6K2/2P1/2P2/3J2/3R1	E	1391	ABD	M			11/95 ▸ 11/95	1H0959481B	**820035**	84	91	95	102	22X1.5	29
1.4 i ▸ 6K-TR099000	6K2/2J1/2J2/2P1/2P2/2R1/2R2/3J1/3J2 3P1/3P2/3R1/3R2	E	1391	ABD	M			11/93 ▸ 11/95	191959481C	**819769**	84	91	95	102	22X1.5	29
1.6 i	6K2/2A1/2D1/2S1/3A1/3D1	E	1595	1F	M			11/93 ▸ 06/96	191959481B	**819743**	84		94		22X1.5	29
1.6 i 6K-TR099001 ▸	6K2/2A1/2D1/3A1/3D1	E	1595	1F	M			11/95 ▸ 06/96	1H0959481B	**820035**	84	91	95	102	22X1.5	29
1.6 i ▸ 6K-TR099000	6K2/2A1/2D1/2S1/3A1/3D1	E	1595	1F	M			11/93 ▸ 11/95	191959481C	**819769**	84	91	95	102	22X1.5	29
1.6 i	6K2/2E1/2E2/2W1/2W2/3E1/3E2/3W1/3W2 8W1/8W2	E	1598	AFT, ABU	M			11/93 ▸ 06/96	191959481B	**819743**	84		94		22X1.5	29
1.6 i TR-099 001 ▸	6K2/2W1/3W1/3W2/8W1/8W2	E	1598	AFT	M			11/95 ▸ 06/96	1H0959481B	**820035**	84	91	95	102	22X1.5	29
1.6 i ▸ TR-099 000	6K2/2E1/2E2/2W1/3E1/3E2/3W1/3W2/8W1 8W2	E	1598	AFT, ABU	M			11/93 ▸ 11/95	191959481C	**819769**	84	91	95	102	22X1.5	29
1.8 i,1.8 i 16V	6K2/2D1/2F1/2M1/2T1/3C1 3F1/3M1/6G1/8C1/8G1	E	1781	ADZ, ABS, ACC, ADL	M			11/93 ▸ 06/96	191959481B	**819743**	84		94		22X1.5	29
1.8 i,1.8 i 16V 6K-TR099001 ▸	6K2/2F1/2M1/2T1/3C1/3F1 3M1/6G1/8C1/8G1	E	1781	ADZ, ADL, ACC	M			11/95 ▸ 06/96	1H0959481B	**820035**	84	91	95	102	22X1.5	29
1.8 i	6K2/2C2/2F2/2M2/3C2/3F2/3M2	E	1781	ADZ, ABS	A			01/94 ▸ 06/96	191959481B	**819743**	84		94		22X1.5	29
1.8 i 6K-TR099001 ▸	6K2/2C2/2F2/2M2/3F2/3M2	E	1781	ADZ	A			11/95 ▸ 06/96	1H0959481B	**820035**	84	91	95	102	22X1.5	29
1.8 i,1.8 i 16V ▸ 6K-TR099000	6K2/2D1/2F1/2M1/2T1/3C1 3F1/3M1/6G1/8C1/8G1	E	1781	ABS, ADZ, ADL, ACC	M			11/93 ▸ 11/95	191959481C	**819769**	84	91	95	102	22X1.5	29
1.8 i ▸ 6K-TR099000	6K2/2C2/2F2/2M2/3C2/3F2/3M2	E	1781	ADZ, ABS	A			01/94 ▸ 11/95	191959481C	**819769**	84	91	95	102	22X1.5	29
2.0 i	6K2/3H1/5H1/8H1/8L1	E	1984	2E, AGG	M			11/93 ▸ 06/96	191959481B	**819743**	84		94		22X1.5	29
2.0 i TR-099 001 ▸	6K2/3H1/5H1/8H1	E	1984	2E	M			11/95 ▸ 06/96	1H0959481B	**820035**	84	91	95	102	22X1.5	29
2.0 i ▸ 6K-TR099000	6K2/3H1/5H1/8H1	E	1984	2E	M			11/93 ▸ 11/95	191959481C	**819769**	84	91	95	102	22X1.5	29
1.9 D,1.9 SDi,1.9 TD	6K2/2N1/2X1/2X2/2Z2/372 3E1/3K1/3Q1/3X1/3Y2/3Z2 5E1/5K1/5Q1	D	1896	AAZ, 1Y, AEY	M			11/93 ▸ 06/96	191959481B	**819743**	84		94		22X1.5	29
1.9 D,1.9 SDi,1.9 TD 6K-TR099001 ▸	6K2/2X1/2X2/2Z2/372/3E1 3K1/3Q1/3X1/3Y2/3Z2/5E1 5K1/5Q1	D	1896	1Y, AAZ, AEY	M			11/95 ▸ 06/96	1H0959481B	**820035**	84	91	95	102	22X1.5	29
1.9 D,1.9 SDi,1.9 TD ▸ TR-099 000	6K2/2N1/2X1/2X2/2Z2/372 3E1/3K1/3Q1/3X1/3Y2/3Z2 5E1/5K1/5Q1	D	1896	1Y, AAZ, AEY	M			11/93 ▸ 11/95	191959481C	**819769**	84	91	95	102	22X1.5	29

Cordoba (96>99)

1.0 i	6K2/261/361	E	999	AER	M			06/97 ▸ 04/99	1H0959481B	**820035**	84	91	95	102	22X1.5	29
1.4 i,1.4 i 16V	6K2/271/2A3/2U2/2U3/2V2 371/3A3/3U2/3U3/3V2, 6K5 2A3/2U2/2U3/2V2/3A3/3U2 3U3/3V2	E	1390	APQ, AEX, AKV, ANX, AFH	M			07/96 ▸ 05/99	1H0959481B	**820035**	84	91	95	102	22X1.5	29
1.6 i	6K2/2D1/2S1/3D1/8D1	E	1595	1F	M			07/96 ▸ 04/99	1H0959481B	**820035**	84	91	95	102	22X1.5	29
1.6 i	6K2/2D4/3D4, 6K5/2D4/3D4	E	1595	1F	A			05/97 ▸ 05/99	1H0959481B	**820035**	84	91	95	102	22X1.5	29
1.6 i	6K2/251/2F1/2W1/2W2/351/3F1/3W1/3W2 5W1/5W2/851/8F1/8W1/8W2, 6K5/251 2F1/2W1/351/3F1/3W1/3W2	E	1598	ALM, AFT, AEE	M			07/96 ▸ 05/99	1H0959481B	**820035**	84	91	95	102	22X1.5	29
1.8 i	6K52T1, 6K2/2M1/2T1/3M1	E	1781	ACC, ADZ	M			07/96 ▸ 05/99	1H0959481B	**820035**	84	91	95	102	22X1.5	29
1.8 i	6K2/2C2/2M2/3C2/3M2	E	1781	ADZ	A			07/96 ▸ 04/99	1H0959481B	**820035**	84	91	95	102	22X1.5	29
1.8 i	6K22C2, 6K23C2, 6K22M2, 6K23M2	E	1781	ADZ	A			07/96 ▸ 04/99	191919369A	●**820833**			120		20	
2.0 i,2.0 i 16V	6K2/2L1/5L1/611/811/8L1	E	1984	ABF, AGG	M			07/96 ▸ 04/99	1H0959481B	**820035**	84	91	95	102	22X1.5	29
1.9 D,1.9 SDi,1.9 TD 1.9 TDi	6K2/2N2/2Y2/2Z2/3E1/3N2 3Y2/3Z2/581/5E1/5N2/881 8N2, 6K5/2N2/2Z2/3N2/3Z2/581	D	1896	AHU, 1Y, AEY, AFN, 1Z, AAZ	M			07/96 ▸ 05/99	1H0959481B	**820035**	84	91	95	102	22X1.5	29

Cordoba (99>2002)

1.0 i,1.0 i 16V	6K2/2A6/2B6/2Q6/2V6/2Y6 3A6/3B6/3V6/3Y6	E	999	ALD, AVZ, AUC, ANV, AST	M			08/99 ▸ 08/02	1H0959481B	**820035**	84	91	95	102	22X1.5	29

• **New** Nouveau **Nuevo** Novo **Nuovo** Nieuw **Neu** Yeni Новый Nou

		Type Ctr.		cc			AC			OE	Valeo	(°)C T1	T2	T3	T4	COD.	mm
SEAT (.../...)																	
Cordoba (99>2002) (.../...)																	
1.4 i,1.4 i 16V	*6K2/2C6/2D6/2E6/2R6/2U6 3C6/3D6/3E6/3R6/3U6/5R6 8E6, 6K5/2C6/2D6/2E6/2R6 2U6/3C6/3D6/3E6/3R6/3U6*	E	1390	ANW, AQQ, APE, AUD, AUB, AKK		M			05/99 ▸ 08/02	1H0959481B	**820035**	84	91	95	102	22X1.5	29
1.6 i	*6K2/2H6/2S6/2T6/3H6/3T6/5H6/5T6/8H6 8T6, 6K5/2H6/2S6/2T6/3H6/3T6/5H6 5T6*	E	1595	AUR, AKL, APF		M			05/99 ▸ 08/02	1H0959481B	**820035**	84	91	95	102	22X1.5	29
1.6 i	*6K2/2G8/2S7/3G8, 6K5/2G8/2S7/3G8*	E	1595	AKL, AEH		A			05/99 ▸ 08/02	1H0959481B	**820035**	84	91	95	102	22X1.5	29
1.6 i	*6K2/2F1/3F1/8F1, 6K5/2F1/3F1*	E	1598	ALM		M			05/99 ▸ 08/02	1H0959481B	**820035**	84	91	95	102	22X1.5	29
1.8 i Turbo 20V	*6K2/6J6/9J6*	E	1781	AQX		M			12/99 ▸ 08/02	1H0959481B	**820035**	84	91	95	102	22X1.5	29
1.9 SDi,1.9 TDi	*6K2/2K6/2L6/2M6/2N6/3K6 3L6/3M6/3N6/3X6/5L6/5N6 5X6/8L6/8N6/9X6, 6K5/2K6 2L6/2M6/2N6/3K6/3L6/3M6 3N6/3X6/5L6/5N6/5X6*	D	1896	ALH, AGR, AQM, AGP, ASV		M			03/99 ▸ 08/02	1H0959481B	**820035**	84	91	95	102	22X1.5	29
Ibiza (93>99)																	
1.0 i	*6K1/161/261/361*	E	999	AER		M			09/96 ▸ 1999	1H0959481B	**820035**	84	91	95	102	22X1.5	29
1.0 i	*6K1161, 6K1261, 6K1361*	E	999	AER		M	+		09/96 ▸ 06/99	191919369A	●**820833**			120		20	
1.05,1.05 i	*6K1/1B1/1B2/1B3/2B3/3B3*	E	1043	AAU		M	+/-		02/93 ▸ 06/96	191959481B	**819743**	84		94		22X1.5	29
1.05 i	*6K1/1B3/2B3/3B3*	E	1043	AAU		M	+/-		11/95 ▸ 06/96	1H0959481B	**820035**	84	91	95	102	22X1.5	29
6K-TR099 001 ▸																	
1.05,1.05 i	*6K1/1B1/1B2/1B3/2B3/3B3*	E	1043	AAU		M	+/-		02/93 ▸ 11/95	191959481C	**819769**	84	91	95	102	22X1.5	29
▸ 6K-TR099000																	
1.05,1.05 i	*6K11B2, 6K12B3, 6K11B1 6K11B3, 6K13B3*	E	1043	AAU		M	+		02/93 ▸ 06/96	191919369A	●**820833**			120		20	
1.3 i	*6K1/1C1/1C2/1L1/1L2/2C1/2C2/2L2/3C1 3C2/3L2*	E	1272	AAV, 2G		M	+/-		02/93 ▸ 07/94	191959481B	**819743**	84		94		22X1.5	29
1.3 i	*6K1/1C1/1C2/1L1/1L2/2C1/2C2/2L2/3C1 3C2/3L2*	E	1272	AAV, 2G		M	+/-		02/93 ▸ 07/94	191959481C	**819769**	84	91	95	102	22X1.5	29
1.3 i	*6K11C2, 6K11L2, 6K13C2, 6K12C1 6K12C2, 6K12L2, 6K11L1, 6K13C1 6K13L2, 6K11C1*	E	1272	2G,AAV		M	+		02/93 ▸ 07/94	191919369A	●**820833**			120		20	
1.4 i	*6K1/1U2/1U3/1V2/2U2/2U3/2V2/3U2/3U3 3V2*	E	1390	AEX		M	+/-		07/95 ▸ 06/96	191959481B	**819743**	84		94		22X1.5	29
1.4 i,1.4 i 16V	*6K1/1A3/1U2/1U3/1V2/271 2A3/2U2/2U3/2V2/371/3A3 3U2/3U3/3V2/571*	E	1390	APQ, AEX, AFH, AKV, ANX		M			11/95 ▸ 1999	1H0959481B	**820035**	84	91	95	102	22X1.5	29
1.4 i,1.4 i 16V	*6K13V2, 6K11U3, 6K11V2 6K12U2, 6K11U2, 6K1571 6K12U3, 6K13U2, 6K12A3 6K12V2, 6K11A3, 6K13U3 6K13A3, 6K1371, 6K1271*	E	1390	AEX,AFH,AKV,ANX,APQ		M	+		07/95 ▸ 06/99	191919369A	●**820833**			120		20	
1.4 i	*6K1/1U2/1U3/1V2/2U2/2U3/2V2/3U2/3U3*	E	1390	AEX		M	+/-		07/95 ▸ 11/95	191959481C	**819769**	84	91	95	102	22X1.5	29
▸ 6K-TR099000	*3V2*																
1.4 i	*6K1/1J1/1J2/1P1/1P2/1R1/1R2/2J1/2J2 2P1/2P2/2R1/2R2/3J2/3P1/3P2/3R1/3R2*	E	1391	ABD		M	+/-		09/93 ▸ 06/96	191959481B	**819743**	84		94		22X1.5	29
1.4 i	*6K1/1J1/1J2/1P1/1P2/1R1/2J1/2J2/2P1*	E	1391	ABD		M	+/-		11/95 ▸ 06/96	1H0959481B	**820035**	84	91	95	102	22X1.5	29
6K-TR099 001 ▸	*2P2/2R1/3J2/3P1/3P2/3R1*																
1.4 i	*6K1/1J1/1J2/1P1/1P2/1R1/1R2/2J1/2J2*	E	1391	ABD		M	+/-		09/93 ▸ 11/95	191959481C	**819769**	84	91	95	102	22X1.5	29
▸ 6K-TR099000	*2P1/2P2/2R1/2R2/3J2/3P1/3P2/3R1/3R2*																
1.4 i	*6K11R1, 6K12J2, 6K12J1, 6K12P1 6K13P1, 6K11J1, 6K13R2, 6K13R1 6K12R1, 6K11P1, 6K12R2, 6K11P2 6K13P2, 6K12P2, 6K13J2, 6K11J2 6K11R2*	E	1391	ABD		M	+		09/93 ▸ 06/96	191919369A	●**820833**			120		20	
1.6 i	*6K1/1D1/2A1/2D1/3A1/3D1*	E	1595	1F		M	+/-		05/94 ▸ 06/96	191959481B	**819743**	84		94		22X1.5	29
1.6 i	*6K1/1D1/2A1/2D1/3A1/3D1*	E	1595	1F		M			11/95 ▸ 1999	1H0959481B	**820035**	84	91	95	102	22X1.5	29
1.6 i	*6K1/2D4/3D4*	E	1595	1F		A			05/97 ▸ 1999	1H0959481B	**820035**	84	91	95	102	22X1.5	29
1.6 i	*6K1/1D1/2A1/2D1/3A1/3D1*	E	1595	1F		M	+/-		05/94 ▸ 11/95	191959481C	**819769**	84	91	95	102	22X1.5	29
▸ 6K-TR099000																	
1.6 i	*6K13D4, 6K12D4*	E	1595	1F		A	+		05/97 ▸ 06/99	191919369A	●**820833**			120		20	
1.6 i	*6K12D1, 6K12A1, 6K13A1, 6K13D1 6K11D1*	E	1595	1F		M	+		05/94 ▸ 06/99	191919369A	●**820833**			120		20	

• **New** Nouveau **Nuevo** Novo **Nuovo** Nieuw **Neu** Yeni Новый Nou

														(°)C				
														T1	T2	T3	T4	mm
SEAT (.../...)																		
Ibiza (93>99) (.../...)																		
1.6 i	*6K1/2E1/2E2/2W1/2W2/3E1/3E2/3W1/3W2*	E	1598	ABU, AFT	M	+/-		02/93 ▸ 06/96	191959481B	**819743**	84		94		22X1.5	29
1.6 i	*6K1/251/2F1/2W1/2W2/351/3F1/3W1/3W2 5W1/5W2*	E	1598	AFT, AEE, ALM	M			12/95 ▸ 1999	1H0959481B	**820035**	84	91	95	102	22X1.5	29
1.6 i ▸ 6K-TR099000	*6K1/2E1/2E2/2W1/2W2/3E1/3E2/3W1/3W2*	E	1598	ABU, AFT	M	+/-		02/93 ▸ 11/95	191959481C	**819769**	84	91	95	102	22X1.5	29
1.6 i	*6K15W1, 6K13W1, 6K12W2, 6K1351 6K12E2, 6K12E1, 6K12F1, 6K1251 6K15W2, 6K13E2, 6K13W2, 6K12W1 6K13F1, 6K13E1*	E	1598	ABU,AEE,AFT,ALM	M	+		02/93 ▸ 06/99	191919369A	●**820833**			120		20	
1.8 i,1.8 i 16V ▸ 6K-TR099 001 ▸	*6K1/2C1/2C3/2F1/2M1/2T1 3C1/3C3/3F1/3M1/6G1/7G1*	E	1781	ADZ, ABS, ADL, ACC	M	+/-, +		11/95 ▸ 1999	1H0959481B	**820035**	84	91	95	102	22X1.5	29
1.8 i,1.8 i 16V	*6K1/2C1/2C3/2F1/2M1/2T1 3C1/3C3/3F1/3M1/6G1/7G1*	E	1781	ADZ, ABS, ADL, ACC	M	+/-		02/93 ▸ 06/96	191959481B	**819743**	84		94		22X1.5	29
1.8 i	*6K1/2C2/2F2/2M2/3C2/3F2/3F3/3M2*	E	1781	ADZ, ABS	A	+/-		02/93 ▸ 06/96	191959481B	**819743**	84		94		22X1.5	29
1.8 i	*6K1/2C2/2F2/2M2/3C2/3F3/3M2*	E	1781	ADZ, ABS	A			11/95 ▸ 1999	1H0959481B	**820035**	84	91	95	102	22X1.5	29
1.8 i,1.8 i 16V ▸ 6K-TR099000	*6K1/2C1/2C3/2F1/2M1/2T1 3C1/3C3/3F1/3M1/6G1/7G1*	E	1781	ADZ, ABS, ADL, ACC	M	+/-		02/93 ▸ 06/96	191959481C	**819769**	84	91	95	102	22X1.5	29
1.8 i ▸ 6K-TR099000	*6K1/2C2/2F2/2M2/3C2/3F2/3F3/3M2*	E	1781	ADZ, ABS	A	+/-		02/93 ▸ 11/95	191959481C	**819769**	84	91	95	102	22X1.5	29
1.8 i	*6K13F2, 6K13F3*	E	1781	ABS	A	+		02/93 ▸ 06/96	191919369A	●**820833**			120		20	
1.8 i	*6K12F2, 6K13M2, 6K12M2, 6K12C2 6K13C2, 6K13F2*	E	1781	ADZ	A	+/-		07/94 ▸ 06/99	191919369A	●**820833**			120		20	
1.8 i,1.8 i 16V	*6K12M1, 6K13F1, 6K13M1 6K13C3, 6K12T1, 6K12C1 6K17G1, 6K12F1, 6K16G1 6K13C1, 6K12C3*	E	1781	ABS,ACC,ADL,ADZ	M	+		02/93 ▸ 06/99	191919369A	●**820833**			120		20	
2.0 i	*6K1/3H1/5H1/5L1/7H1/7L1*	E	1984	2E, AGG	M	+/-		02/93 ▸ 06/96	191959481B	**819743**	84		94		22X1.5	29
2.0 i	*6K1/3H1/5H1/5L1/7H1/7L1*	E	1984	2E, AGG	M	+/-		02/93 ▸ 06/96	191959481C	**819769**	84	91	95	102	22X1.5	29
2.0 i,2.0 i 16V	*6K1/3H1/5H1/5L1/611/7H1 7L1*	E	1984	AGG, ABF, 2E	M			11/95 ▸ 1999	1H0959481B	**820035**	84	91	95	102	22X1.5	29
2.0 i,2.0 i 16V	*6K15L1, 6K15H1, 6K1611 6K17L1, 6K13H1, 6K17H1*	E	1984	2E,ABF,AGG	M	+		02/93 ▸ 06/99	191919369A	●**820833**			120		20	
1.9 D,1.9 SDI,1.9 TD	*KK13K1, 6K1/1N1/1X1/1Y2 1Z2/2N1/2X1/2Y2/2Z2/3E1 3K1/3Q1/3X1/3Y2/3Z2/5E1 5K1/5Q1/7E1*	D	1896	AAZ, 1Y, AEY	M	+/-		02/93 ▸ 06/96	191959481B	**819743**	84		94		22X1.5	29
1.9 D,1.9 SDi,1.9 TD 1.9 TDi	*KK13K1, 6K1/1N1/1X1/1Y2 1Z2/2N1/2N2/2X1/2Y2/2Z2 3E1/3K1/3N2/3Q1/3X1/3Y2 3Z2/581/5E1/5K1/5N2/5Q1 7E1*	D	1896	AEY, 1Y, 1Z, AHU, AAZ, AFN	M			11/95 ▸ 1999	1H0959481B	**820035**	84	91	95	102	22X1.5	29
1.9 D,1.9 SDI,1.9 TD ▸ 6K-TR099000	*KK13K1, 6K1/1N1/1X1/1Y2 1Z2/2N1/2X1/2Y2/2Z2/3E1 3K1/3Q1/3X1/3Y2/3Z2/5E1 5K1/5Q1/7E1*	D	1896	AAZ, 1Y, AEY	M	+/-		02/93 ▸ 06/96	191959481C	**819769**	84	91	95	102	22X1.5	29
1.9 SDI,1.9 TDi	*6K13N2, 6K13Z2, 6K1581 6K12Z2, 6K11Z2, 6K12N2 6K15N2*	D	1896	AEY,AFN,AHU	M	+/-		09/95 ▸ 06/99	191919369A	●**820833**			120		20	
1.9 D,1.9 TD,1.9 TDi	*6K12N1, 6K13Y2, 6K11N1 6K13E1, 6K13N2, 6K12N2 6K15E1, 6K15N2, 6K13Q1 6K13K1, 6K11X1, 6K12Y2 KK13K1, 6K13X1, 6K15Q1 6K11Y2, 6K17E1, 6K12X1 6K15K1*	D	1896	1Y,1Z,AAZ	M	+		02/93 ▸ 12/96	191919369A	●**820833**			120		20	
Ibiza (99>2001)																		
1.0 i,1.0 i 16V	*6K1/1A6/1B6/1V6/2A6/2B6 2Q6/2V6/2Y6/3A6/3B6/3V6 3Y6*	E	999	ALD, AUC, ANV, AVZ, AST	M	+/-		08/99 ▸ 11/01	1H0959481B	**820035**	84	91	95	102	22X1.5	29
1.4 i,1.4 i 16V	*6K1/1C6/1D6/1U6/2C6/2D6 2E6/2R6/2U6/3C6/3D6/3E6 3R6/3U6/5R6*	E	1390	AKK, AUD, ANW, AQQ, APE, AUB AUA	M	+/-		08/99 ▸ 11/01	1H0959481B	**820035**	84	91	95	102	22X1.5	29
1.6 i	*6K1/2H6/2S6/2T6/3H6/3T6/5H6/5T6*	E	1595	AKL, APF, AUR	M	+/-		06/99 ▸ 11/01	1H0959481B	**820035**	84	91	95	102	22X1.5	29

• **New** Nouveau **Nuevo** Novo **Nuovo** Nieuw **Neu** Yeni Новый Nou

			Type Ctr.		cc			AC			OE	Valeo	(°)C T1	T2	T3	T4	COD.	mm
SEAT (.../...)																		
Ibiza (99>2001) (.../...)																		
1.6 i	*6K1/2G8/2S7/3G8*	E		1595	AEH, AKL	A	+/-		01/00 ▸ 11/01	1H0959481B	**820035**	84	91	95	102	22X1.5	29
1.6 i	*6K1/2F1/3F1*	E		1598	ALM	M	+/-		08/99 ▸ 11/01	1H0959481B	**820035**	84	91	95	102	22X1.5	29
1.8 i Turbo 20V	*6K1/5J6/6J6*	E		1781	AQX, AYP	M	+/-		12/99 ▸ 11/01	1H0959481B	**820035**	84	91	95	102	22X1.5	29
1.9 SDi,1.9 TDi	*6K1/1K6/1M6/2K6/2L6/2M6 2N6/3K6/3L6/3M6/3N6/3X6 5L6/5N6/5X6*	D		1896	AGP, AQM, ALH, AGR, ASV	M	+/-		03/99 ▸ 11/01	1H0959481B	**820035**	84	91	95	102	22X1.5	29
Ibiza (2001>)																		
1.2 i 12V	*6L1D4*	E		1198	AZQ	M	+		01/02 ▸ 04/04	1J0959481	**820302**	90		95		22X1.5	29
1.4 i 16V	*6L1/2H4/3H4/5G4/5H4*	E		1390	BBY,BBZ	M	+		01/02 ▸ 11/09	1J0959481	**820302**	90		95		22X1.5	29
1.4 i 16V	*6L1/2G3/3G3*	E		1390	BBY,BKY	A			06/02 ▸ 12/07	1J0959481	**820302**	90		95		22X1.5	29
1.4 i 16V	*6L1/2H4/3H4/5G4/5H4*	E		1390	BBY,BBZ	M	+		01/02 ▸	1J0959481A	●**820831**	85		90		22X1.5	29
1.4 i 16V	*6L1/2G4/2H4/3G4/3H4/5H4*	E		1390	AUB,BBY,BKY	M			09/01 ▸ 06/06	1J0959481A	●**820831**	85		90		22X1.5	29
1.4 i 16V	*6L1/2G3/3G3*	E		1390	BBY,BKY	A			06/02 ▸ 12/07	1J0959481A	●**820831**	85		90		22X1.5	29
1.6 i	*6L1/2K4/3K4*	E		1598	BAH	M			04/03 ▸ 04/04	1J0959481	**820302**	90		95		22X1.5	29
1.8 i Turbo 20V	*6L1/6P4/7J4*	E		1781	BBU,BJX	M			12/03 ▸ 05/08	1J0959481	**820302**	90		95		22X1.5	29
2.0 i	*6L1/2L4/3L4/5L4*	E		1984	BBX	M			04/03 ▸ 06/07	1J0959481A	●**820831**	85		90		22X1.5	29
2.0 i	*6L1/2T4/3T4/5T4*	E		1984	AZL	M	+		07/02 ▸ 06/05	1J0959481	**820302**	90		95		22X1.5	29
2.0 i	*6L1/2L4/3L4/5L4*	E		1984	BBX	M			04/03 ▸ 06/07	1J0959481	**820302**	90		95		22X1.5	29
1.4 TDi	*6L1/2D4/3D4/5D4*	D		1422	AMF	M	+		05/02 ▸ 12/05	1J0959481	**820302**	90		95		22X1.5	29
1.9 SDi	*6L1114*	D		1896	ASY	M	+		01/02 ▸ 12/05	1J0959481	**820302**	90		95		22X1.5	29
1.9 SDi,1.9 TDi	*6L1/2L4/2Z4/3L4/3Z4/3J6 5Z4/5J6/6K6/7K6/7L6*	D		1896	ASY,ASZ,ATD,BPX	M			09/01 ▸ 11/05	1J0959481A	●**820831**	85		90		22X1.5	29
Ibiza VI (2008>)																		
1.2 i 12V	*6J1/2C4/3C4/5C4, 6J5/2C4 3C4*	E		1198	BZG	M			03/08 ▸	1J0959481A	●**820831**	85		90		22X1.5	29
1.4 i 16V	*6J1/2E4/3E4/5E4, 6J5/2E4 3E4/5E4*	E		1390	BXW	M			03/08 ▸	1J0959481A	●**820831**	85		90		22X1.5	29
1.6 i 16V	*6J1/2G4/3G4/5G4, 6J5/2G4 3G4/5G4*	E		1598	BTS	M			05/08 ▸	1J0959481A	●**820831**	85		90		22X1.5	29
1.6 i 16V	*6J1/3G7/5G7, 6J5/2G7/3G7 5G7*	E		1598	BTS	A			05/08 ▸	1J0959481A	●**820831**	85		90		22X1.5	29
SEAT																		
Inca																		
1.4 i,1.4 i 16V	*6K9/1A1/1D6/1E6/1U1/1V1 2A1/2D6/2E6/2U1/2U4/2V1 3A1/3D6/3E6/3U1/3U4/3V1 4A1/4D6/4E6/4U1/4V1*	E		1390	AUA, AEX, APQ, AUD, AKV	M			11/95 ▸	1H0959481B	**820035**	84	91	95	102	22X1.5	29
1.6 i	*6K9/1D2/2D2/2D3/3D2/3D3/4D2*	E		1595	1F	M			11/95 ▸ 05/97	1H0959481B	**820035**	84	91	95	102	22X1.5	29
1.6 i	*6K9/152/252/253/352/353/452*	E		1598	AEE	M			06/97 ▸	1H0959481B	**820035**	84	91	95	102	22X1.5	29
1.7 SDi	*6K9/121/221/321/421*	D		1714	AHB	M			09/96 ▸	1H0959481B	**820035**	84	91	95	102	22X1.5	29
1.9 D,1.9 SDi	*6K9/136/1Y1/1Z1/236/2Y1 2Z1/336/3Y1/3Z1/436/4Y1 4Z1*	D		1896	AYQ, 1Y, AEY	M			11/95 ▸	1H0959481B	**820035**	84	91	95	102	22X1.5	29
SEAT																		
Leon																		
1.4 i 16V	*1M1/2C4/2D4/3C4/3D4/5C4 5D4/8C4/8D4*	E		1390	BCA, AXP, APE, AHW	M			06/00 ▸	867959481	**820034**	84		95		22X1.5	29
1.4 i 16V	*1M1/2C4/2D4/3C4/3D4/5C4 5D4/8C4/8D4*	E		1390	AHW,APE	M	+/-		11/99 ▸ 05/02	1J0959481A	●**820831**	85		90		22X1.5	29
1.4 i 16V	*1M18C4, 1M15C4, 1M12C4 1M13C4*	E		1390	AXP	M	+		06/00 ▸ 02/02	191919369A	●**820833**			120		20	
1.4 i 16V	*1M1/2C4/2D4/3C4/3D4/5C4 5D4/8C4/8D4*	E		1390	AHW,APE	M	+/-		11/99 ▸ 05/02	1J0959481	**820302**	90		95		22X1.5	29
1.4 i 16V	*1M1/2C4/3C4/5C4/8C4*	E		1390	AXP,BCA	M			06/00 ▸ 10/05	1J0959481	**820302**	90		95		22X1.5	29
1.6 i,1.6 i 16V	*1M1/3J4/3KC/5J4/5KC/8J4 8KC*	E		1595	AKL, AZD, AUS, BCB	M	+/-		06/00 ▸	867959481	**820034**	84		95		22X1.5	29

• **New** Nouveau **Nuevo** Novo **Nuovo** Nieuw **Neu** Yeni Новый Nou

			Type Ctr.		CC		AC			OE	Valeo	(°)C T1	T2	T3	T4	COD.	mm	
SEAT (.../...)																			
Leon (.../...)																			
1.6 i	*1M1/3H3/5H3/8H3*	E	1595	AEH	A	+/-		11/99 ▸	867959481	**820034**	84		95		22X1.5	29
1.6 i	*1M1/3J4/5J4/8J4*	E	1595	AKL	M	+/-		11/99 ▸ 10/05	1J0959481A	**●820831**	85		90		22X1.5	29
1.6 i 16V	*1M1/3KC/5KC/8KC*	E	1595	AUS,AZD,BCB	M			06/00 ▸ 10/05	1J0959481A	**●820831**	85		90		22X1.5	29
1.6 i 16V	*1M13KC, 1M15KC, 1M18KC*	E	1595	AUS	M	+		06/00 ▸ 04/01	191919369A	**●820833**			120		20	
1.6 i	*1M1/3H3/5H3/8H3*	E	1595	AEH	A	+/-		08/99 ▸ 04/04	1J0959481A	**●820831**	85		90		22X1.5	29
1.6 i	*1M15H3, 1M18H3, 1M13H3*	E	1595	AEH	A	+		08/99 ▸ 10/05	191919369A	**●820833**			120		20	
1.6 i	*1M1/3J4/5J4/8J4*	E	1595	AKL	M	+/-		11/99 ▸ 10/05	1J0959481	**820302**	90		95		22X1.5	29
1.6 i	*1M1/3H3/5H3/8H3*	E	1595	AEH	A	+/-		08/99 ▸ 04/04	1J0959481	**820302**	90		95		22X1.5	29
1.8 i 20V,1.8 i Turbo 20V	*1M1/3O4/516/536/559/586 599/5P4/5O4/636/736/759 8P4/8O4*	E	1781	AJQ, AGN, APP, APG, AUQ, ARY BAM, AMK	M	+/-		09/00 ▸	867959481	**820034**	84		95		22X1.5	29
1.8 i 20V	*1M1/3O3/5O3/8O3*	E	1781	APG	A			09/00 ▸ 10/05	867959481	**820034**	84		95		22X1.5	29
1.8 i 20V,1.8 i Turbo 20V	*1M1/536/599/5P4/5O4/8P4 8O4*	E	1781	AGN,AJQ,APG,APP	M	+/-		08/99 ▸ 10/05	1J0959481	**820302**	90		95		22X1.5	29
1.8 i 20V,1.8 i Turbo 20V	*1M1/3O4/516/536/559/586 636/736/759*	E	1781	AMK,APG,ARY,AUQ,BAM	M			09/00 ▸ 05/06	1J0959481	**820302**	90		95		22X1.5	29
1.8 i 20V	*1M1/3O3/5O3/8O3*	E	1781	APG	A			09/00 ▸ 10/05	1J0959481	**820302**	90		95		22X1.5	29
2.8 i V6 24V	*1M1/6W7/7W7*	E	2792	BDE, AUE	M			10/00 ▸ 04/04	867959481	**820034**	84		95		22X1.5	29
2.8 i V6 24V	*1M1/6W7/7W7*	E	2792	AUE,BDE	M			10/00 ▸ 04/04	1J0959481	**820302**	90		95		22X1.5	29
1.9 SDi,1.9 TDi	*1M1/2O4/3O4/324/344/346 374/3B4/524/546/566/567 574/666/667/766/767/824 844/846/874/8B4*	D	1896	ARL, ASZ, AQM, ALH, AGR, AHF ASV	M			09/00 ▸	867959481	**820034**	84		95		22X1.5	29
1.9 SDi,1.9 TDi	*1M1/2O4/3O4/324/344/374 3B4/524/574/824/844/874 8B4*	D	1896	AGR,AHF,ALH,AQM,ASV	M	+/-		10/99 ▸ 05/06	1J0959481	**820302**	90		95		22X1.5	29
1.9 TDi	*1M1/346/546/566/567/666 667/766/767/846*	D	1896	ARL,ASZ	M			09/00 ▸ 05/06	1J0959481	**820302**	90		95		22X1.5	29
Marbella																			
850		E	843	08NCA	M			11/86 ▸ 1991	SE021952600A	**820202**	90	100	95	105	22X1.5	29
900		E	899	1170A	M			10/96 ▸ 05/98	SE021952600A	**820202**	90	100	95	105	22X1.5	29
900		E	903	09NCA,09NCB	M			11/86 ▸ 09/96	SE021952600A	**820202**	90	100	95	105	22X1.5	29
SEAT																			
Terra																			
903	*CS0/4/5/6/7, CS1/0/6/7, CS2/0/5 CS40, CS50, CS3/0/5, CT0/0/1/2/3/4 5/6/7/9, CT1/0/6/7, CT2/0/5, CT3/0 5, CT4/0/5, CT65, CT75, CT5/0/5*	E	903	09NCA, 09NCB	M			02/87 ▸	SE127952600A	**819759**	87		92		22X1.5	29
1.3 D	*CD0/0/1*	D	1272	MN	M			08/89 ▸ 1991	SE021952600B	**819748**	79		88		22X1.5	29
1.4 D	*CD15, CD0/2/3, CD30, CE02, CE15 CE25, CD2/0/5*	D	1391	1W	M			08/89 ▸	SE021952600B	**819748**	79		88		22X1.5	29
SEAT																			
Toledo (91>98)																			
1.6 i	*1L23B1, 1L28B1, 1L22B1*	E	1595	1F	M			02/91 ▸ 09/95	191919369A	**●820833**			120		20	
1.6,1.6 i	*1L2/2A1/2B1/2O1/2X1/3A1 3B1/3O1/3X1/5X1/8A1/8B1 8O1/8X1*	E	1595	1F, EZ, ABN	M			02/91 ▸ 10/98	191959481C	**819769**	84	91	95	102	22X1.5	29
1.6,1.6 i	*1L2/2A1/2B1/3A1/3B1/8A1 8B1*	E	1595	ABN, 1F, EZ	M			02/91 ▸ 09/95	191959481B	**819743**	84		94		22X1.5	29
1.6 i	*1L2/2W1/311/3W1/511/5W1/8W1*	E	1598	AFT, AKS	M			09/96 ▸ 10/98	191959481C	**819769**	84	91	95	102	22X1.5	29
1.8 i,1.8 i 16V	*1L2/2C1/2C2/2J1/2P1/3C1 3C2/3J1/3P1/3P2/5E1/5F1 8C1/8C2/8J1/8P1/8P2*	E	1781	ADZ, KR, RP, ABS, PL	M			02/91 ▸ 09/98	1H0959481B	**820035**	84	91	95	102	22X1.5	29
1.8 i,1.8 i 16V	*1L2/2C1/2C2/2J1/2P1/3C1 3C2/3J1/3P1/3P2/5E1/5F1 8C1/8C2/8J1/8P1/8P2*	E	1781	KR, ADZ, RP, ABS, PL	M			02/91 ▸ 10/98	191959481C	**819769**	84	91	95	102	22X1.5	29

• **New** Nouveau **Nuevo** Novo **Nuovo** Nieuw **Neu** Yeni Новый Nou

			Type Ctr.		cc		AC			OE	Valeo	(°)C T1	T2	T3	T4	COD.	mm	
SEAT (.../...)																		
Toledo (91>98) (.../...)																		
2.0 i,2.0 i 16V	*1L2/2K1/3D1/3K1/5D1/5K1 5M1/6M1/8D1/8K1*	E		1984	2E, ABF	M			02/91 ▸ 08/96	1H0959481B	**820035**	84	91	95	102	22X1.5	29	
2.0 i,2.0 i 16V	*1L2/2K1/3D1/3K1/3T1/5D1 5K1/5M1/5M2/5T1/6M1/6M2 8D1/8K1/8T1*	E		1984	AGG, 2E, ABF	M			02/91 ▸ 10/98	191959481C	**819769**	84	91	95	102	22X1.5	29	
2.0 i	*1L2/3D2/5D2/5K2/8D2*	E		1984	2E	A			02/91 ▸ 09/95	1H0959481B	**820035**	84	91	95	102	22X1.5	29	
2.0 i	*1L2/3D2/3T2/5D2/5K2/5T2/8D2/8T2*	E		1984	AGG, 2E	A			02/91 ▸ 10/98	191959481C	**819769**	84	91	95	102	22X1.5	29	
1.9 D,1.9 TD,1.9 TDi	*1L2/2H1/2L1/2S1/3G1/3G2 3H1/3L1/3N1/3R1/3S1/3Z1 5R1/5Z1/8G1/8G2/8H1/8L1 8N1/8R1/8S1/8Z1*	D		1896	AHU, AAZ, 1Y, AFN, 1Z	M			02/91 ▸ 10/98	191959481C	**819769**	84	91	95	102	22X1.5	29	
1.9 D,1.9 TD,1.9 TDi	*1L2/2H1/2L1/3G1/3G2/3H1 3L1/3N1/3R1/5R1/8G1/8G2 8H1/8L1/8N1/8R1*	D		1896	AAZ, 1Y, 1Z	M			02/91 ▸ 04/97	1H0959481B	**820035**	84	91	95	102	22X1.5	29	
Toledo (98>2004)																		
1.4 i 16V	*1M2/2C4/2D4/3C4/3D4*	E		1390	AXP, AHW	M	+/-		01/00 ▸ 05/02	867959481	**820034**	84		95		22X1.5	29	
1.4 i 16V	*1M2/2C4/2D4/3C4/3D4*	E		1390	AHW,AXP	M	+/-		01/00 ▸ 05/02	1J0959481A	●**820831**	85		90		22X1.5	29	
1.4 i 16V	*1M2/2C4/2D4/3C4/3D4*	E		1390	AHW,AXP	M	+/-		01/00 ▸ 05/02	1J0959481	**820302**	90		95		22X1.5	29	
1.6 i,1.6 i 16V	*1M2/2J4/2KC/3J4/3KC/5J4 5KC/8J4/8KC*	E		1595	AZD, AKL, AUS, BCB	M	+/-		04/02 ▸	867959481	**820034**	84		95		22X1.5	29	
1.6 i	*1M2/3H3/5H3/8H3*	E		1595	AEH	A	+/-		11/98 ▸	867959481	**820034**	84		95		22X1.5	29	
1.6 i,1.6 i 16V	*1M2/2J4/2KC/3J4/3KC/5J4 5KC/8J4/8KC*	E		1595	AKL,AUS,AZD	M	+/-		10/98 ▸ 07/04	1J0959481A	●**820831**	85		90		22X1.5	29	
1.6 i	*1M2/3H3/5H3/8H3*	E		1595	AEH	A	+/-		11/98 ▸ 07/04	1J0959481A	●**820831**	85		90		22X1.5	29	
1.6 i,1.6 i 16V	*1M2/2J4/2KC/3J4/3KC/5J4 5KC/8J4/8KC*	E		1595	AKL,AUS,AZD	M	+/-		10/98 ▸ 07/04	1J0959481	**820302**	90		95		22X1.5	29	
1.6 i 16V	*1M2/2KC/8KC*	E		1595	BCB	M			04/02 ▸ 07/04	1J0959481	**820302**	90		95		22X1.5	29	
1.6 i	*1M2/3H3/5H3/8H3*	E		1595	AEH	A	+/-		11/98 ▸ 07/04	1J0959481	**820302**	90		95		22X1.5	29	
1.8 i 20V	*1M2/3P4/3O4/536/5P4/5O4 836/8P4/8O4*	E		1781	AGN, APG, AUQ	M	+/-		05/01 ▸	867959481	**820034**	84		95		22X1.5	29	
1.8 i 20V	*1M2/3N3/3Q3/5N3/5Q3/8N3 8Q3*	E		1781	AGN, APG	A	+/-		05/02 ▸	867959481	**820034**	84		95		22X1.5	29	
1.8 i 20V	*1M2/3Q3/5N3/5Q3/8N3/8Q3*	E		1781	AGN,APG	A	+/-		11/98 ▸ 07/04	1J0959481A	●**820831**	85		90		22X1.5	29	
1.8 i 20V	*1M23N3*	E		1781	AGN	A			05/02 ▸ 12/03	1J0959481A	●**820831**	85		90		22X1.5	29	
1.8 i 20V	*1M2/5P4/5O4/8P4/8O4*	E		1781	AGN,APG	M	+/-		10/98 ▸ 07/04	1J0959481	**820302**	90		95		22X1.5	29	
1.8 i 20V	*1M2/3Q3/5N3/5Q3/8N3/8Q3*	E		1781	AGN,APG	A	+/-		11/98 ▸ 07/04	1J0959481	**820302**	90		95		22X1.5	29	
2.3 i VR5 20V	*1M2/5T4/5U4/6T4/6U4/8U4*	E		2324	AQN, AGZ	M			05/02 ▸	867959481	**820034**	84		95		22X1.5	29	
2.3 i VR5 20V	*1M2/5T4/6T4/6U4*	E		2324	AGZ,AQN	M	+/-		10/98 ▸ 11/03	1J0959481A	●**820831**	85		90		22X1.5	29	
2.3 i VR5 20V	*1M2/5T4/5U4/6T4/6U4*	E		2324	AGZ,AQN	M	+/-		10/98 ▸ 11/03	1J0959481	**820302**	90		95		22X1.5	29	
2.3 i VR5 20V	*1M28U4*	E		2324	AQN	M			05/02 ▸ 11/03	1J0959481	**820302**	90		95		22X1.5	29	
1.9 TDi	*1M2/224/244/274/2B4/324 344/374/3B4/524/566/574 666/824/844/846/866/874 8B4*	D		1896	ASV, AHF, AGR, ALH, ARL, ASZ	M	+/-		10/98 ▸	867959481	**820034**	84		95		22X1.5	29	
SKODA																		
Fabia (99>2004)																		
1.0 i	*6Y21A4*	E		997	ARV	M			10/00 ▸ 08/02	1J0959481A	●**820831**	85		90		22X1.5	29	
1.0 i	*6Y21A4*	E		997	ARV	M	-		10/00 ▸ 08/02	1J0959481	**820302**	90		95		22X1.5	29	
1.2 i	*6Y21C4*	E		1198	BMD	M			05/04 ▸ 07/04	1J0959481A	●**820831**	85		90		22X1.5	29	
1.2 i	*6Y21C4*	E		1198	BMD	M	-		05/04 ▸ 07/04	1J0959481	**820302**	90		95		22X1.5	29	
1.4 i 16V	*6Y2/2J4/3F4*	E		1390	AUA,AUB	M	+		10/99 ▸ 08/03	1J0959481A	●**820831**	85		90		22X1.5	29	
1.4 i 16V	*6Y2/1F4/2F4/3J4, 6Y3/1F4 2F4/3F4, 6Y5/1F4/2F4/3F4*	E		1390	AUA,AUB,BBY	M			10/99 ▸ 05/04	1J0959481A	●**820831**	85		90		22X1.5	29	
1.4 i 16V	*6Y2/2F3/3F3*	E		1390	AUA	A	+		05/00 ▸ 11/02	1J0959481A	●**820831**	85		90		22X1.5	29	
1.4 i 16V	*6Y2/1F3, 6Y3/1F3/2F3/3F3 6Y5/1F3/2F3/3F3*	E		1390	AUA	A			05/00 ▸ 08/03	1J0959481A	●**820831**	85		90		22X1.5	29	
1.4 i 16V	*6Y2/1F4/2F4/2J4/3F4/3J4*	E		1390	AUA,AUB	M	-		10/99 ▸ 08/03	1J0959481	**820302**	90		95		22X1.5	29	
1.4 i 16V	*6Y2/1F3/2F3/3F3*	E		1390	AUA	A	-		05/00 ▸ 11/02	1J0959481	**820302**	90		95		22X1.5	29	
1.4 i	*6Y2/1D4/2D4*	E		1397	AME,ATZ	M	+		08/99 ▸ 05/03	1J0959481A	●**820831**	85		90		22X1.5	29	

• **New** Nouveau **Nuevo** Novo **Nuovo** Nieuw **Neu** Yeni Новый Nou

			Type Ctr.		CC			AC				OE	Valeo	(°)C T1	T2	T3	T4	COD.	○: mm	
SKODA (.../...)																				
Fabia (99>2004) (.../...)																				
1.4 i	*6Y2/1D4/2B4/3D4, 6Y3/1D4/2D4/3D4 6Y5/1D4/2D4/3D4*	E		1397	AME,ATZ,AZF	M			08/99 ▸ 05/03	1J0959481A	●820831	85		90		22X1.5	29
1.4 i	*6Y2/1D4/2B4/2D4*	E		1397	AME,ATZ,AZF	M	-		08/99 ▸ 05/03	1J0959481	820302	90		95		22X1.5	29
1.4 TDi	*6Y2144*	D		1422	AMF	M			04/03 ▸ 07/04	1J0959481A	●820831	85		90		22X1.5	29
1.4 TDi	*6Y2144*	D		1422	AMF	M			04/03 ▸ 07/04	1J0959481	820302	90		95		22X1.5	29
1.9 SDi,1.9 TDi	*6Y2/124/224/264/364*	D		1896	ASY,ATD	M	+		11/99 ▸ 04/03	1J0959481A	●820831	85		90		22X1.5	29
1.9 SDi,1.9 TDi	*6Y2/124/224/264/364*	D		1896	ASY,ATD	M	-		11/99 ▸ 04/03	1J0959481	820302	90		95		22X1.5	29
Fabia (2004>2007)																				
2.0 i	*6Y2/1T4/2T4/3T4, 6Y3/1T4/2T4/3T4 6Y5/1T4/2T4/3T4*	E		1984	AZL	M			08/04 ▸ 12/07	1J0959481	820302	90		95		22X1.5	29
1.9 TDi	*6Y2585*	D		1896	ASZ,BLT	M			08/04 ▸ 04/07	1J0959481	820302	90		95		22X1.5	29
Fabia II (2007>)																				
1.2 i,1.2 i 12V	*542/1B4/1D4/2B4/2D4/3B4 3D4/4B4/4D4*	E		1198	BBM-E2,BBM-E4,BZG-E4	M	+/-		12/06 ▸	1J0959481A	●820831	85		90		22X1.5	29
1.2 i,1.2 i 12V	*542/1B4/1D4/2B4/2D4/3B4 3D4/4B4/4D4*	E		1198	BBM,BZG	M	-		12/06 ▸ 03/10	1J0959481	820302	90		95		22X1.5	29
1.4 i,1.4 i 16V	*542/1D4/1G4/2G4/3G4/4G4 545/1G4/2G4/3G4/4G4*	E		1390	BXW-E2,BXW-E4	M	+/-		01/07 ▸	1J0959481A	●820831	85		90		22X1.5	29
1.4 i 16V	*542/1D4/1G4/2G4/3G4/4G4*	E		1390	BXW	M	-		01/07 ▸ 03/10	1J0959481	820302	90		95		22X1.5	29
1.6 i 16V	*542/1K4/2K4/3K4/4K4*	E		1598	BTS-E4	M	+/-		04/07 ▸	1J0959481A	●820831	85		90		22X1.5	29
1.6 i 16V	*542/1KC/2KC/3KC/4KC*	E		1598	BTS-E4	A	+/-		07/07 ▸	1J0959481A	●820831	85		90		22X1.5	29
Favorit																				
1.1		E		1137	SKOD04	M			01/89 ▸ 07/95	6U0959481E	819760	86		95		22X1.5	29
1.1		E		1137	SKOD04	M			10/91 ▸ 07/95	115095070	819757	79		88		22X1.5	29
1.3	*AEA200, CEA300, CEE300, ADA/200/300*	E		1289	136, 781135B	M			03/88 ▸ 07/95	6U0959481E	819760	86		95		22X1.5	29
1.3	*AEA200, CEA300, CEE300, ADA/200/300*	E		1289	136, 781135B	M			10/91 ▸ 07/95	115095070	819757	79		88		22X1.5	29
Felicia (94>2001)																				
1.3,1.3 i	*6U1/314/334/335/344/372 374/414/434/435/444/474 6U5/314/334/335/344/374 384/414/434/435/444/474 484, 6U6/114/134/144/174 184, 6U7/114/134/144/174 184, EEA/413/414/613/614 673, EEF/613/614/679, EEG 413/614, EFF/413/613/614 679*	E		1289	AMH, 135CP, 135I, 13MPI54 135, 136I, AMG, AMJ, 13MPI68	M	+		10/94 ▸ 12/97	6U0959481A	819769	84	91	95	102	22X1.5	29
1.3,1.3 i	*6U1/314/334/344/372/414 434/444, EEF614, EEA/414 613/614, EFF413, EEG/413 614*	E		1289	135CP, 135, AMG, 136I, 135I	M			10/94 ▸ 07/95	115095070	819757	79		88		22X1.5	29
1.3,1.3 i	*6U1/314/334/335/344/372 374/414/434/435/444/474 6U5/314/334/335/344/374 384/414/434/435/444/474 484, 6U6/114/134/174/184 6U7/114/144/174/184, EEA 413/414/613/614/673, EEF 613/614/679, EEG/413/614 EFF/413/613/614/679*	E		1289	135I, 136I, 135, AMG, 135CP 13MPI68, 13MPI54, AMJ, AMH	M			10/94 ▸ 05/98	6U0959481E	819760	86		95		22X1.5	29
1.6 i	*6U71G4, 6UFFG4, EGF615, 6U6/1G4*	E		1598	AEE, 16MPI	M	+		07/95 ▸ 12/97	6U0959481A	819769	84	91	95	102	22X1.5	29
1.6 i	*EGF615*	E		1598	16MPI	M			07/95 ▸ 06/96	004433017	819760	86		95		22X1.5	29
1.9 D	*6U1/3H4/4H4, 6U61H4, 6U71H4, 6U5 3H4/4H4, EHH/613/614/673/679*	D		1896	AEF	M	+/-		10/95 ▸ 12/97	6U0959481A	819769	84	91	95	102	22X1.5	29
Felicia (Facelift) (98>2001)																				
1.3,1.3 i	*6U1/375/385/475/485, 6U5 375/385/475/485, 6U6/135 175/185, 6UFF85, 6U7/135 175/185*	E		1289	AMH, AMJ, AMG	M	+/-		01/98 ▸ 07/95	115095070	819757	79		88		22X1.5	29

• **New** Nouveau **Nuevo** Novo **Nuovo** Nieuw **Neu** Yeni Новый Nou

SKODA (.../...)

Felicia (Facelift) (98>2001) (.../...)

1.3,1.3 i	6U1/371/375/385/475/485 6U5/375/385/475/485, 6U6 135/175/185, 6UFF85, 6U7 135/175	E	1289	AMG, AMH, AMJ	M	+		01/98 ▸	6U0959481A	**819769**	84	91	95	102	22X1.5	29
1.3,1.3 i	6U1/375/385/475/485, 6U5 375/385/475/485, 6U6/135 175/185, 6UFF85, 6U7/135 175	E	1289	AMJ, AMG, AMH	M	-		01/98 ▸ 05/98	6U0959481E	**819760**	86		95		22X1.5	29
1.6 i	6U1/3C5/3G5/4C5/4G5, 6U5/3C5/3G5 4C5/4G5, 6U6/1C5/1G5, 6UFFG5, 6U7 1C5/1G5	E	1598	AEE	M	+		01/97 ▸	6U0959481A	**819769**	84	91	95	102	22X1.5	29
1.9 D	6U1/3H5/4H5, 6U61H5, 6U71H5, 6UFFH5 6U5/3H5/4H5	D	1896	AEF	M			11/95 ▸	6U0959481A	**819769**	84	91	95	102	22X1.5	29

Forman

1.3		E	1289	135, 781135B	M			11/90 ▸	6U0959481E	**819760**	86		95		22X1.5	29
1.3		E	1289	135, 781135B	M			10/91 ▸	115095070	**819757**	79		88		22X1.5	29

Octavia (96>2000)

1.4 i	1U21A4	E	1390	AMD	M			02/99 ▸ 07/00	867959481	**820034**	84		95		22X1.5	29
1.4 i	1U21A4	E	1390	AMD	M	+		02/99 ▸ 07/00	1J0959481A	**●820831**	85		90		22X1.5	29
1.4 i	1U21A4	E	1390	AMD	M			02/99 ▸ 07/00	1J0959481	**820302**	90		95		22X1.5	29
1.6 i	1U2/2E4/2L4/3L4, 1U5/1E4/1F4/2E4 2F4/3E4/3F4	E	1595	AEH	M			02/97 ▸ 07/00	867959481	**820034**	84		95		22X1.5	29
1.6 i	1U2/2L3/3L3, 1U5/2E3/2F3/2L3/3E3 3F3/3L3	E	1595	AEH, AKL	A			02/97 ▸ 07/00	867959481	**820034**	84		95		22X1.5	29
1.6 i	1U2/2E4/2L4/3L4, 1U5/1E4/1F4/2E4 2F4/3E4/3F4	E	1595	AEH	M	+		04/97 ▸ 07/00	1J0959481A	**●820831**	85		90		22X1.5	29
1.6 i	1U5/2E4/3E4	E	1595	AEH	M			08/98 ▸ 07/00	1J0959481A	**●820831**	85		90		22X1.5	29
1.6 i	1U2/2L3/3L3, 1U5/2E3/2F3/2L3/3E3 3F3/3L3	E	1595	AEH,AKL	A	+		06/97 ▸ 07/00	1J0959481A	**●820831**	85		90		22X1.5	29
1.6 i	1U5/1E4/1F4/2E4/2F4/3E4/3F4	E	1595	AEH	M	-		05/98 ▸ 07/00	1J0959481	**820302**	90		95		22X1.5	29
1.6 i	1U5/2E3/2F3/2L3/3E3/3F3/3L3	E	1595	AEH,AKL	A	-		08/98 ▸ 07/00	1J0959481	**820302**	90		95		22X1.5	29
1.6 i	1U51D4, 1U2/1D4/2D4	E	1598	AEE	M			10/96 ▸ 07/00	867959481	**820034**	84		95		22X1.5	29
1.6 i	1U51D4, 1U2/1D4/2D4	E	1598	AEE	M	+		10/96 ▸ 07/00	1J0959481A	**●820831**	85		90		22X1.5	29
1.6 i	1U21D4	E	1598	AEE	M			08/98 ▸ 07/00	1J0959481A	**●820831**	85		90		22X1.5	29
1.6 i	1U51D4	E	1598	AEE	M	-		05/98 ▸ 07/00	1J0959481	**820302**	90		95		22X1.5	29
1.6 i	1U2/1D4/2D4	E	1598	AEE	M			10/96 ▸ 07/00	1J0959481	**820302**	90		95		22X1.5	29
1.8 i 20V,1.8 i Turbo 20V	1U2/3P4/4Q4/4S4, 1U5/2R4 3Q4/3R4/4Q4/4S4	E	1781	AGU, AGN, ARZ	M			10/96 ▸ 07/00	867959481	**820034**	84		95		22X1.5	29
1.8 i 20V,1.8 i Turbo 20V	1U2/3P3, 1U5/2P3/3P3/3Q3 4Q3	E	1781	AGN, AGU	A			06/97 ▸ 07/00	867959481	**820034**	84		95		22X1.5	29
1.8 i 20V,1.8 i Turbo 20V	1U2/3P4/4Q4, 1U5/2R4/3Q4 3R4/4Q4	E	1781	AGN,AGU	M	+		10/96 ▸ 07/00	1J0959481A	**●820831**	85		90		22X1.5	29
1.8 i 20V,1.8 i Turbo 20V	1U2/4S4, 1U5/3Q4/3R4/4S4	E	1781	AGN,AGU,ARZ	M			05/98 ▸ 07/00	1J0959481A	**●820831**	85		90		22X1.5	29
1.8 i 20V,1.8 i Turbo 20V	1U2/3P3, 1U5/2P3/3P3/3Q3 4Q3	E	1781	AGN,AGU	A	+		06/97 ▸ 07/00	1J0959481A	**●820831**	85		90		22X1.5	29
1.8 i 20V	1U23P3	E	1781	AGN	A			03/98 ▸ 04/99	1J0959481A	**●820831**	85		90		22X1.5	29
1.8 i 20V,1.8 i Turbo 20V	1U5/2R4/3Q4/3R4/4Q4	E	1781	AGN,AGU	M	-		05/98 ▸ 07/00	1J0959481	**820302**	90		95		22X1.5	29
1.8 i 20V,1.8 i Turbo 20V	1U5/2P3/3P3/3Q3/4Q3	E	1781	AGN,AGU	A	-		08/98 ▸ 07/00	1J0959481	**820302**	90		95		22X1.5	29
2.0 i	1U2/3N4, 1U5/2TX/3TX	E	1984	AZH, ATF, AQY	M			05/99 ▸ 07/00	867959481	**820034**	84		95		22X1.5	29
2.0 i	1U23N3	E	1984	APK, AQY	A			05/99 ▸ 07/00	867959481	**820034**	84		95		22X1.5	29
2.0 i	1U23N4	E	1984	AQY	M	+		05/99 ▸ 07/00	1J0959481A	**●820831**	85		90		22X1.5	29
2.0 i	1U5/2TX/3TX	E	1984	ATF,AZH	M			11/99 ▸ 07/00	1J0959481A	**●820831**	85		90		22X1.5	29
2.0 i	1U23N3	E	1984	APK,AQY	A			05/99 ▸ 07/00	1J0959481A	**●820831**	85		90		22X1.5	29
2.0 i	1U2/3N4, 1U5/2TX/3TX	E	1984	AQY,ATF,AZH	M			05/99 ▸ 07/00	1J0959481	**820302**	90		95		22X1.5	29
2.0 i	1U23N3	E	1984	APK,AQY	A			05/99 ▸ 07/00	1J0959481	**820302**	90		95		22X1.5	29
1.9 SDi,1.9 TDi	1U2/164/264/274/374/384 394/484/494, 1U5/164/274 27X/374/37X/384/484/494 774	D	1896	AGR, AGP, ASV, AHF	M			10/96 ▸	867959481	**820034**	84		95		22X1.5	29
1.9 TDi	1U2383	D	1896	AHF	A			08/97 ▸ 07/00	867959481	**820034**	84		95		22X1.5	29

• **New** Nouveau **Nuevo** Novo **Nuovo** Nieuw **Neu** Yeni Новый Nou

SKODA (.../...)

Octavia (96>2000) (.../...)

1.9 SDi,1.9 TDi	*1U2/164/264/274/374/384 484, 1U5/164/274/374/37X 384/484/774*	D	1896	AGP,AGR,AHF	M	+		10/96 ▸ 07/00	1J0959481A	●820831	85		90		22X1.5	29
1.9 TDi	*1U2/394/494, 1U5/274/27X 374/384/494*	D	1896	AGR,AHF,ASV	M			08/98 ▸	1J0959481A	●820831	85		90		22X1.5	29
1.9 TDi	*1U2383*	D	1896	AHF	A	+		08/97 ▸ 07/00	1J0959481A	●820831	85		90		22X1.5	29
1.9 SDi,1.9 TDi	*1U2/164/264/274/374/384 394/484/494, 1U5/274/27X 374/384/494*	D	1896	AGP,AGR,AHF,ASV	M			10/96 ▸	1J0959481	820302	90		95		22X1.5	29
1.9 TDi	*1U2383*	D	1896	AHF	A			08/97 ▸ 07/00	1J0959481	820302	90		95		22X1.5	29

Octavia (2000>2004)

1.4 i,1.4 i 16V	*1U2/1A4/1B4/2A4/2B4, 1U5 1B4/2B4*	E	1390	AXP, BCA, AMD	M			08/00 ▸	867959481	820034	84		95		22X1.5	29
1.4 i 16V	*1U22B4, 1U52B4*	E	1390	BCA	M	+		01/02 ▸ 09/04	1J0959481A	●820831	85		90		22X1.5	29
1.4 i,1.4 i 16V	*1U2/1A4/1B4/2A4/2B4, 1U5 1B4/2B4*	E	1390	AMD,AXP,BCA	M			08/00 ▸ 12/10	1J0959481	820302	90		95		22X1.5	29
1.6 i	*1U2/1E3/1E4/1G4/2E4/2G4/3E4/3G4 1U5/1E4/1G4/2E4/2G4/3E4/3G4*	E	1595	AKL, AEH, AVU, BFQ	M			08/00 ▸	867959481	820034	84		95		22X1.5	29
1.6 i	*1U2/1E3/1G3/2E3/2G3/3E3/3G3, 1U5 1E3/1G3/2E3/2G3/3E3/3G3*	E	1595	BFQ, AEH, AVU, AKL	A			08/00 ▸	867959481	820034	84		95		22X1.5	29
1.6 i	*1U2/1E3/1E4/2G4/3G4, 1U5/1G4/2G4 3G4*	E	1595	AEH,AKL,BFQ	M	+		08/00 ▸ 12/07	1J0959481A	●820831	85		90		22X1.5	29
1.6 i	*1U2/1E4/1G4/2E4/2G4/3E4/3G4, 1U5 1E4/1G4/2E4/2G4/3E4/3G4*	E	1595	AEH,AKL,AVU,BFQ	M			08/00 ▸	1J0959481A	●820831	85		90		22X1.5	29
1.6 i	*1U2/1E3/1G3/2G3/3G3, 1U5/1E3/1G3 2G3/3G3*	E	1595	AEH,AKL,BFQ	A	+		08/00 ▸ 12/07	1J0959481A	●820831	85		90		22X1.5	29
1.6 i	*1U2/2E3/2G3/3E3/3G3, 1U5/2E3/2G3 3E3/3G3*	E	1595	AEH,AKL,AVU	A			08/00 ▸ 09/04	1J0959481A	●820831	85		90		22X1.5	29
1.6 i	*1U2/1E3/1E4/1G4/2E4/2G4/3E4/3G4 1U5/1E4/1G4/2E4/2G4/3E4/3G4*	E	1595	AEH,AKL,AVU,BFQ	M			08/00 ▸ 12/10	1J0959481	820302	90		95		22X1.5	29
1.6 i	*1U2/1E3/1G3/2E3/2G3/3E3/3G3, 1U5 1E3/1G3/2E3/2G3/3E3/3G3*	E	1595	AEH,AKL,AVU,BFQ	A			08/00 ▸ 12/07	1J0959481	820302	90		95		22X1.5	29
1.6 i	*1U2/1D4/2D4, 1U5/1D4/2D4*	E	1598	AEE	M			08/00 ▸	867959481	820034	84		95		22X1.5	29
1.6 i	*1U2/1D4/2D4, 1U5/1D4/2D4*	E	1598	AEE	M			08/00 ▸ 09/04	1J0959481A	●820831	85		90		22X1.5	29
1.6 i	*1U2/1D4/2D4, 1U5/1D4/2D4*	E	1598	AEE	M			08/00 ▸ 09/04	1J0959481	820302	90		95		22X1.5	29
1.8 20V,1.8 i Turbo 20V	*1U2/1O4/1OX/2O4/2OX/3O4 3OX/4O4/4OX/5O4/5R4/PO4 1U5/1O4/1OX/2O4/2OX/3O4 3OX/4O4/4OX/5R4*	E	1781	ARX, AGU, AUQ, AUM, ARZ	M			08/00 ▸	867959481	820034	84		95		22X1.5	29
1.8 i Turbo 20V	*1U2/1Q3/2Q3/3Q3/4Q3, 1U5 1Q3/2Q3/3Q3/4Q3*	E	1781	AUM, AGU, ARX	A			08/00 ▸	867959481	820034	84		95		22X1.5	29
1.8 i Turbo 20V	*1U2/1O4/1OX/2O4/2OX/5O4 PO4, 1U5/1O4/1OX/2O4/2OX 4O4*	E	1781	AGU,ARX,AUM	M	+		08/00 ▸	1J0959481A	●820831	85		90		22X1.5	29
1.8 20V,1.8 i Turbo 20V	*1U2/3O4/3OX/4O4/4OX/5R4 1U5/3O4/3OX/4O4/4OX/5R4*	E	1781	AGU,ARX,ARZ,AUM,AUQ	M			08/00 ▸ 09/04	1J0959481A	●820831	85		90		22X1.5	29
1.8 i Turbo 20V	*1U2/1Q3/2Q3/3Q3/4Q3, 1U5 1Q3/2Q3/3Q3/4Q3*	E	1781	AGU,AUM	A	+		08/00 ▸ 01/06	1J0959481A	●820831	85		90		22X1.5	29
1.8 i Turbo 20V	*1U2/3Q3/4Q3, 1U5/3Q3/4Q3*	E	1781	AGU,ARX	A			08/00 ▸ 09/04	1J0959481A	●820831	85		90		22X1.5	29
1.8 20V,1.8 i Turbo 20V	*1U2/1O4/1OX/2O4/2OX/3O4 3OX/4O4/4OX/5O4/5R4/PO4 1U5/1O4/1OX/2O4/2OX/3O4 3OX/4O4/4OX/5R4*	E	1781	AGU,ARX,ARZ,AUM,AUQ	M			08/00 ▸ 12/10	1J0959481	820302	90		95		22X1.5	29
1.8 i Turbo 20V	*1U2/1Q3/2Q3/3Q3/4Q3, 1U5 1Q3/2Q3/3Q3/4Q3*	E	1781	AGU,ARX,AUM	A			08/00 ▸ 01/06	1J0959481	820302	90		95		22X1.5	29
2.0 i	*1U2/1N4/1T4/2M4/2N4/2T4/3M4/3N4/3T4 1U5/1N4/1T4/1TX/2N4/2T4/2TX/3N4 3T4/3TX*	E	1984	APK, AQY, AZH, AEG, AZJ	M			08/00 ▸	867959481	820034	84		95		22X1.5	29
2.0 i	*1U2/1N3/1T3/2N3/2T3/3N3/3T3, 1U5 1N3/1T3/2N3/2T3/3N3/3T3*	E	1984	AEG, AQY, APK, AZJ	A			08/00 ▸	867959481	820034	84		95		22X1.5	29
2.0 i	*1U2/1N4/1T4/2M4/2T4/3M4/3T4, 1U5 1N4/1T4/1TX/2T4/2TX/3T4/3TX*	E	1984	AEG,APK,AQY,AZH,AZJ	M	+		08/00 ▸ 05/07	1J0959481A	●820831	85		90		22X1.5	29
2.0 i	*1U2/2N4/3N4, 1U5/2N4/2TX/3N4/3TX*	E	1984	AEG,APK,AQY,AZH	M			08/00 ▸ 09/04	1J0959481A	●820831	85		90		22X1.5	29

• **New** Nouveau **Nuevo** Novo **Nuovo** Nieuw **Neu** Yeni Новый Nou

SKODA (.../...)

Octavia (2000>2004) (.../...)

2.0 i	1U2/1N3/1T3/2T3/3T3, 1U5/1N3/1T3 2T3/3T3	E	1984	AEG,APK,AQY,AZJ	A	+		08/00 ▸ 05/07	1J0959481A	●820831	85		90		22X1.5	29
2.0 i	1U2/2N3/3N3, 1U5/2N3/3N3	E	1984	AEG,APK,AQY	A			08/00 ▸ 09/04	1J0959481A	●820831	85		90		22X1.5	29
2.0 i	1U2/1N4/1T4/2N4/2N4/2T4/3N4/3N4/3T4 1U5/1N4/1T4/1TX/2N4/2T4/2TX/3N4 3T4/3TX	E	1984	AEG,APK,AQY,AZH,AZJ	M			08/00 ▸ 05/07	1J0959481	820302	90		95		22X1.5	29
2.0 i	1U2/1N3/1T3/2N3/2T3/3N3/3T3, 1U5 1N3/1T3/2N3/2T3/3N3/3T3	E	1984	AEG,APK,AQY,AZJ	A			08/00 ▸ 05/07	1J0959481	820302	90		95		22X1.5	29
1.9 D,1.9 TDi	1U2/164/174/184/264/274 284/295/374/384/395/474 484/495/P84, 1U5/15Y/164 174/184/25Y/264/274/27X 284/295/35Y/374/37X/384 394/395/484/495	D	1896	ASV, AGR, AQM, ASZ, ALH, ATD AHF	M			08/00 ▸	867959481	820034	84		95		22X1.5	29
1.9 TDi	1U2/173/273/373/473, 1U5 173/273/373	D	1896	ALH	A			08/00 ▸	867959481	820034	84		95		22X1.5	29
1.9 TDi	1U2/174/184/295/474, 1U5 15Y/184	D	1896	AGR,AHF,ALH,ASV,ASZ,ATD	M	+		08/00 ▸ 01/06	1J0959481A	●820831	85		90		22X1.5	29
1.9 D,1.9 TDi	1U2/164/174/264/274/284 374/384/395/484/495/P84 1U5/164/174/25Y/264/274 27X/284/295/35Y/374/37X 384/394/395/484/495	D	1896	AGR,AHF,ALH,AQM,ASV,ASZ,ATD	M			08/00 ▸ 09/04	1J0959481A	●820831	85		90		22X1.5	29
1.9 TDi	1U5173, 1U2/173/473	D	1896	ALH	A	+		08/00 ▸ 12/07	1J0959481A	●820831	85		90		22X1.5	29
1.9 TDi	1U2/273/373, 1U5/273/373	D	1896	ALH	A			08/00 ▸ 09/04	1J0959481A	●820831	85		90		22X1.5	29
1.9 D,1.9 TDi	1U2/164/174/184/264/274 284/295/374/384/395/474 484/495/P84, 1U5/15Y/164 174/184/25Y/264/274/27X 284/295/35Y/374/37X/384 394/395/484/495	D	1896	AGR,AHF,ALH,AQM,ASV,ASZ,ATD	M			08/00 ▸ 01/06	1J0959481	820302	90		95		22X1.5	29
1.9 TDi	1U2/173/273/373/473, 1U5 173/273/373	D	1896	ALH	A			08/00 ▸ 12/07	1J0959481	820302	90		95		22X1.5	29

Octavia (2004>2008)

1.4 i 16V	1Z3/1B4/1C4/2B4/2C4, 1Z5 1B4/1C4/2B4/2C4	E	1390	BCA,BUD	M			05/04 ▸ 10/08	1J0959481A	●820831	85		90		22X1.5	29
1.6 i	1Z3/1G4/2G4/3G4	E	1595	BSE,BSF	M			05/05 ▸ 10/08	1J0959481A	●820831	85		90		22X1.5	29
1.6 i	1Z3/1GC/2GC/3GC	E	1595	BSE,BSF	A			05/05 ▸ 10/08	1J0959481A	●820831	85		90		22X1.5	29

Roomster

1.2 i 12V	5J7/1E4/2E4/3E4/4E4	E	1198	BME-E2,BME-E4	M			05/06 ▸	1J0959481A	●820831	85		90		22X1.5	29
1.6 i 16V	5J7/1K4/2K4/3K4/4K4	E	1598	BTS-E2,BTS-E4	M	+/-		05/06 ▸	1J0959481A	●820831	85		90		22X1.5	29
1.4 TDi	5J7/114/134/214/234/314 334/414/434	D	1422	BNM,BNV	M			05/06 ▸	1J0959481A	●820831	85		90		22X1.5	29
1.9 TDi	5J7/164/264/364/464	D	1896	AXR	M			03/06 ▸ 05/06	1J0959481A	●820831	85		90		22X1.5	29

Superb

1.8 i Turbo 20V	3U4/1K4/2K4/3K4	E	1781	AWT	M			12/01 ▸	8D0959481B	820305	90	97	95	102	2	
1.8 i Turbo 20V	3U4/1KB/2KB/3KB	E	1781	AWT	A			01/04 ▸	8D0959481B	820305	90	97	95	102	2	
2.0 i	3U4/1M4/2M4/3M4	E	1984	AZM	M			12/01 ▸	8D0959481B	820305	90	97	95	102	2	
2.8 i V6 30V	3U4/1S4/2S4/3S4	E	2771	AMX	M			12/01 ▸	8D0959481B	820305	90	97	95	102	2	
2.8 i V6 30V	3U4/1SB/1TB/2SB/2TB/3SB 3TB	E	2771	AMX, BBG	A			12/01 ▸	8D0959481B	820305	90	97	95	102	2	
1.9 TDi	3U4/124/134/224/234/324 334	D	1896	AVB, AWX	M			12/01 ▸	8D0959481B	820305	90	97	95	102	2	
1.9 TDi	3U4/13B/23B/33B	D	1896	AVF	A			01/04 ▸	8D0959481B	820305	90	97	95	102	2	
2.5 TDi V6 24V	3U4/165/175/265/275/365 375	D	2496	BDG, AYM	M			12/01 ▸	8D0959481B	820305	90	97	95	102	2	

• **New** Nouveau **Nuevo** Novo **Nuovo** Nieuw **Neu** Yeni Новый Nou

			Type Ctr.		CC			AC				OE	Valeo	(°)C T1	T2	T3	T4	COD.	mm
SKODA (.../...)																			
Superb (.../...)																			
2.5 TDi V6 24V	*3U4/16B/17B/26B/27B/36B 37B*	D		2496	AYM, BDG	A			12/01 ▸		8D0959481B	**820305**	90	97	95	102	2	
SUBARU																			
Justy																			
1.3 i	*MAF, MAG*	E		1298	G13BA	M			10/95 ▸ 07/96		1768050F10	**820329**	95		100		16X1.5	
SUZUKI																			
Alto (SS80)																			
0.8	*SS80F*	E		796	F8A	M			10/80 ▸ 09/85		1768078000	**820238**	87		92		16X1.5	
0.8	*SS80A*	E		796	F8A	A			10/80 ▸ 09/85		1768078000	**820238**	87		92		16X1.5	
Swift (SF) (89>)																			
1.3 i 16V	*EAA34*	E		1298	G13BDOHC, G13DOHC	M			10/89 ▸		1768050F10	**820329**	95		100		16X1.5	
Swift (SF) (95>96)																			
1.0 i	*MAB44, MAA44*	E		993	G10A	M			01/95 ▸		1768050F10	**820329**	95		100		16X1.5	
1.0 i	*MAA44, MAB44*	E		993	G10A	A			01/95 ▸		1768050F10	**820329**	95		100		16X1.5	
1.3 i	*MAA35, MAB35, MAH35*	E		1298	G13BAK	M			01/95 ▸		1768050F10	**820329**	95		100		16X1.5	
1.3 i	*MAB35, MAA35*	E		1298	G13BAK	A			01/95 ▸		1768050F10	**820329**	95		100		16X1.5	
TALBOT																			
Horizon																			
1.1	*T2-DF, 21A-0*	E		1118	E1A, E1	M			01/78 ▸ 07/85		0013255100	**819760**	86		95		22X1.5	29
1.3	*21A-1, S2-DG, T2-DG*	E		1294	G2S, G1E, G1, G1A, G1D	M			01/78 ▸ 07/85		0013255100	**819760**	86		95		22X1.5	29
1.4	*S2-DH, 21A-2, T2-DH, T2-DJ, S2-DJ*	E		1442	Y1, Y2, Y1B, Y2S, TALB04	M			10/78 ▸ 1986		0013255100	**819760**	86		95		22X1.5	29
1.4	*21A-2, T2-DJ*	E		1442	Y2S, Y2	A			07/79 ▸ 1986		0013255100	**819760**	86		95		22X1.5	29
1.6	*21A-3, 21A-6, 21A-4*	E		1592	J2A, J2S, J1B	M			07/82 ▸ 1986		0013255100	**819760**	86		95		22X1.5	29
1.6	*21A-3*	E		1592	J2S, J2A	A			07/83 ▸ 07/84		0013255100	**819760**	86		95		22X1.5	29
1.7 D	*21A-5*	D		1769	XUD7	M			07/83 ▸ 06/85		126416	**819772**	79	83	84	88	22X1.5	29
1.9 D	*21A-5*	D		1905	XUD9	M			07/82 ▸ 1986		0013255100	**819760**	86		95		22X1.5	29
Samba																			
1.0	*51A-5, 51A-6*	E		954	XV8, XV5	M			01/81 ▸ 1985		126414	**819757**	79		88		22X1.5	29
1.1	*51A-6, 51A-7, 51A-5, 51F-6, 51E-6*	E		1124	XW7	M			01/81 ▸ 1985		126414	**819757**	79		88		22X1.5	29
1.2	*51A-6*	E		1219	XZ7R	M			1983 ▸ 1985		126414	**819757**	79		88		22X1.5	29
1.4	*51E-6, 51A-6*	E		1360	XY6B, XY8, XY6, XY7	M			01/81 ▸ 1985		126414	**819757**	79		88		22X1.5	29
Solara																			
1.3	*62B-1, T6-EC*	E		1294	G1E, G1D	M			04/80 ▸ 1984		0013255100	**819760**	86		95		22X1.5	29
1.4	*T6-EE, 62B-2, 62B-3, T6-ED*	E		1442	Y1, Y2S, Y2	M			04/80 ▸ 1984		0013255100	**819760**	86		95		22X1.5	29
1.6	*62B-1, 62B-3, T6-EB*	E		1592	J1A, J1, J2, J2A	M			04/80 ▸ 1985		0013255100	**819760**	86		95		22X1.5	29
1.6	*T6-EB, 62B-3*	E		1592	J2, J2A	A			04/80 ▸ 1984		0013255100	**819760**	86		95		22X1.5	29
TOYOTA																			
Camry (82>86)																			
1.8	*SV10RU, SV10LU*	E		1832	1S-L	M			10/82 ▸ 10/86		8942832010	**820237**	85		90		16X1.5	
1.8	*SV10LU, SV10RU*	E		1832	1S-L	A			10/82 ▸ 10/86		8942832010	**820237**	85		90		16X1.5	
2.0 i	*SV11LU, SV11RU*	E		1995	2S-EL,2S-ELC	M			03/83 ▸ 10/86		8942815011	**820237**	85		90		16X1.5	
2.0 i	*SV11LU, SV11RU*	E		1995	2S-EL,2S-ELC	A			03/83 ▸ 10/86		8942815011	**820237**	85		90		16X1.5	
1.8 TD	*CV10LU, CV10RU*	D		1839	1C-TL	M			08/83 ▸ 08/85		8942815030	**820325**	85		90		16X1.5	
1.8 TD	*CV10LU, CV10RU*	D		1839	1C-TL	A			08/83 ▸ 08/85		8942815030	**820325**	85		90		16X1.5	
2.0 TD	*CV11LU, CV11RU*	D		1974	2C-TL	M			08/85 ▸ 10/86		8942815011	**820237**	85		90		16X1.5	
2.0 TD	*CV11LU*	D		1974	2C-TL	A			08/85 ▸ 10/86		8942815011	**820237**	85		90		16X1.5	
Camry (86>91)																			
1.8	*SV20LG, SV20LU*	E		1832	1S-L	M			11/87 ▸ 08/88		8942820060	**820326**	85		90		16X1.5	

• **New** Nouveau **Nuevo** Novo **Nuovo** Nieuw **Neu** Yeni Новый Nou

			Type Ctr.		cc			AC			OE	Valeo	(°)C T1	T2	T3	T4	COD.	mm	
TOYOTA (.../...)																			
Camry (86>91) (.../...)																			
1.8	SV20LU	E		1832	1S-L		A			11/87 ▸ 08/88	8942820060	**820326**	85		90		16X1.5		
1.8	SV20LU, SV20LG	E		1832	1S-L		M			10/86 ▸ 11/87	8942832010	**820237**	85		90		16X1.5		
1.8	SV20LU	E		1832	1S-L		A			10/86 ▸ 11/87	8942832010	**820237**	85		90		16X1.5		
2.0 i	SV21LG, SV21LU, SV25LU	E		1996	3S-FE		M			11/87 ▸ 06/91	8942820060	**820326**	85		90		16X1.5		
2.0 i	SV21LU, SV21LG	E		1996	3S-FE		A			11/87 ▸ 06/91	8942820060	**820326**	85		90		16X1.5		
2.0 i	SV25LU, SV21LG, SV21LU	E		1996	3S-FE		M			10/86 ▸ 11/87	8942832010	**820237**	85		90		16X1.5		
2.0 i	SV21LU, SV21LG	E		1996	3S-FE		A			10/86 ▸ 11/87	8942832010	**820237**	85		90		16X1.5		
2.0 i 16V	SV21RU, SV21LG, SV21RG SV25LU, SV21LU, SV25RU	E		1998	3S-FE		M			11/87 ▸ 06/91	8942820060	**820326**	85		90		16X1.5		
2.0 i 16V	SV21LU, SV21LG, SV21RU SV21RG	E		1998	3S-FE		A			11/87 ▸ 06/91	8942820060	**820326**	85		90		16X1.5		
2.0 i 16V	SV25LU, SV21RU, SV21LG SV25RU, SV21LU, SV21RG	E		1998	3S-FE		M			10/86 ▸ 11/87	8942832010	**820237**	85		90		16X1.5		
2.0 i 16V	SV21LG, SV21RG, SV21RU SV21LU	E		1998	3S-FE		A			10/86 ▸ 11/87	8942832010	**820237**	85		90		16X1.5		
2.5 i V6	VZV21L	E		2507	2VZ-FE		M			02/88 ▸ 06/91	8942820060	**820326**	85		90		16X1.5		
2.5 i V6	VZV21L, VZV21R	E		2507	2VZ-FE		A			02/88 ▸ 06/91	8942820060	**820326**	85		90		16X1.5		
2.0 TD	CV20RU, CV20RG, CV20LG CV20LU	D		1974	2C-TL		M			10/86 ▸ 06/91	8942815030	**820325**	85		90		16X1.5		
Carina II (ST17*) (87>92)																			
1.6,1.6 i 16V	AT171L, AT171R	E		1587	4A-F,4A-FC,4A-FEC		M			12/87 ▸ 11/92	8942815011	**820237**	85		90		16X1.5		
1.6,1.6 i 16V	AT171R, AT171L	E		1587	4A-F,4A-FC,4A-FEC		A			12/87 ▸ 03/92	8942815011	**820237**	85		90		16X1.5		
2.0 i 16V	ST171R, ST171L	E		1998	3S-FE, 3S-FEC		M			12/87 ▸ 03/92	8942820060	**820326**	85		90		16X1.5		
2.0 i 16V	ST171L, ST171R	E		1998	3S-FEC, 3S-FE		A			12/87 ▸ 03/92	8942820060	**820326**	85		90		16X1.5		
2.0 D	CT170R, CT170L	D		1974	2C		M			12/87 ▸ 11/92	8942815030	**820325**	85		90		16X1.5		
Carina E (92>97)																			
1.6 i 16V	AT190L, AT190R	E		1587	4A-FE		M			12/92 ▸ 10/97	8942812160	**820338**	87		92		16X1.5		
1.6 i 16V	AT190R, AT190L	E		1587	4A-FE		A			12/92 ▸ 01/96	8942812160	**820338**	87		92		16X1.5		
1.8 i 16V	AT191L, AT191R	E		1762	7A-FE		M			12/94 ▸ 10/97	8942812160	**820338**	87		92		16X1.5		
1.8 i 16V	AT191L, AT191R	E		1762	7A-FE		A			01/96 ▸ 10/97	8942812160	**820338**	87		92		16X1.5		
2.0 TD	CT190R	D		1974	2C-T		M			01/96 ▸ 10/97	8942812160	**820338**	87		92		16X1.5		
Celica (ST16) (85>89)																			
1.6,1.6 i 16V	AT160L	E		1587	4A-GEL, 4A-L, 4A-GELC		M			08/85 ▸ 08/89	8942820060	**820326**	85		90		16X1.5		
2.0 i Turbo	ST165R, ST165L	E		1998	3S-GTE		M			10/87 ▸ 08/89	8942815030	**820325**	85		90		16X1.5		
2.0 i	ST162L, ST162R	E		1998	3S-GEL, 3S-GELC		M			01/88 ▸ 08/89	8942820060	**820326**	85		90		16X1.5		
2.0 i	ST162L, ST162R	E		1998	3S-GEL		A			01/88 ▸ 08/89	8942820060	**820326**	85		90		16X1.5		
2.0 i	ST162L, ST162R	E		1998	3S-GEL,3S-GELC		M			08/85 ▸ 01/88	8942832010	**820237**	85		90		16X1.5		
2.0 i	ST162R, ST162L	E		1998	3S-GEL		A			08/85 ▸ 01/88	8942832010	**820237**	85		90		16X1.5		
Celica (ST18) (89>93)																			
1.6 16V	AT180L, AT180R	E		1587	4A-FE		M			08/91 ▸ 10/93	8942812160	**820338**	87		92		16X1.5		
1.6 16V	AT180L, AT180R	E		1587	4A-FE		M			10/89 ▸ 08/91	8942815011	**820237**	85		90		16X1.5		
2.0 16V,2.0 Turbo	ST185L, ST182R, ST182L ST185R	E		1998	3S-GTE, 3S-GE		M			10/89 ▸ 09/91	8942815030	**820325**	85		90		16X1.5		
2.0 16V,2.0 Turbo	ST182R, ST185L, ST185R ST182L	E		1998	3S-GE, 3S-GTE		A			10/89 ▸ 08/91	8942815030	**820325**	85		90		16X1.5		
Celica (ST200) (93>99)																			
1.8 i 16V	AT200R	E		1762	7A-FE		M			05/95 ▸ 07/99	8942812160	**820338**	87		92		16X1.5		
Corolla (100) (92>97)																			
1.3	EE100L	E		1295	2E		M			05/92 ▸ 04/97	8942812160	**820338**	87		92		16X1.5		
1.3 16V	EE101L, EE101R	E		1332	4E-FE		M			05/92 ▸ 04/97	8942812160	**820338**	87		92		16X1.5		
1.3 16V	EE101L, EE101R	E		1332	4E-FE		A			05/92 ▸ 04/97	8942812160	**820338**	87		92		16X1.5		
1.6 16V	AE101L, AE101R	E		1587	4A-FE		M			05/92 ▸ 04/97	8942812160	**820338**	87		92		16X1.5		
1.6 16V	AE101L, AE101R	E		1587	4A-FE		A			05/92 ▸ 04/97	8942812160	**820338**	87		92		16X1.5		
1.8 16V	AE102R, AE102L	E		1762	7A-FE		M			11/92 ▸ 05/95	8942812160	**820338**	87		92		16X1.5		
Corolla (110) (97>99)																			
1.3 i 12V	EE110L	E		1295	2E		M			04/97 ▸ 09/99	8942812160	**820338**	87		92		16X1.5		
1.3 i 16V	EE111R, EE111L	E		1332	4E-FE		M			04/97 ▸ 09/99	8942812160	**820338**	87		92		16X1.5		

• **New** Nouveau **Nuevo** Novo **Nuovo** Nieuw **Neu** Yeni Новый Nou

		Type Ctr.		CC			AC			OE	Valeo	(°)C T1	T2	T3	T4	COD.	○: mm	
TOYOTA (.../...)																				
Corolla (110) (97>99) (.../...)																				
1.3 i 16V	*EE111L, EE111R*	E	1332	4E-FE	A			04/97 ▸ 09/99	8942812160	**820338**	87		92		16X1.5					
1.6 i 16V	*AE111L, AE111R*	E	1587	4A-FE	M			04/97 ▸ 09/99	8942812160	**820338**	87		92		16X1.5					
1.6 i 16V	*AE111L, AE111R*	E	1587	4A-FE	A			04/97 ▸ 09/99	8942812160	**820338**	87		92		16X1.5					
1.8 i 16V	*AE115L*	E	1762	7A-FE	M			04/97 ▸ 09/99	8942812160	**820338**	87		92		16X1.5					
2.0 D	*CE110L, CE110R*	D	1974	2C-E	M			04/97 ▸ 09/99	8942812160	**820338**	87		92		16X1.5					
Corolla (50) (79>83)																				
1.3	*KE70LE, KE70RG, KE70LG, KE70RE*	E	1290	4K, 4K-C	M			08/81 ▸ 06/84	8942810050	**820332**	92		97		16X1.5					
1.3	*KE70LE, KE70RE, KE70LG, KE70RG*	E	1290	4K, 4K-C	A			08/81 ▸ 06/84	8942810050	**820332**	92		97		16X1.5					
Corolla (80) (83>87)																				
1.3	*EE80LE, EE80RE*	E	1295	2E-L, 2E-LC	M			10/84 ▸ 09/87	8942810100	**820331**	80		85		16X1.5					
1.3	*EE80LE, EE80RE*	E	1295	2E-L	A			08/84 ▸ 09/87	8942810100	**820331**	80		85		16X1.5					
1.3	*AE80LE, AE80RE*	E	1296	2A-L,2A-LC	M			05/83 ▸ 05/86	8942815011	**820237**	85		90		16X1.5					
1.3	*AE80RE, AE80LE*	E	1296	2A-L,2A-LC	A			05/83 ▸ 05/86	8942815011	**820237**	85		90		16X1.5					
1.6,1.6 i 16V	*AE82RE, AE82LE, AE82RC*	E	1587	4A-GEL,4A-GELC,4A-L,4A-LC	M			05/83 ▸ 09/87	8942815011	**820237**	85		90		16X1.5					
1.6	*AE82LE, AE82RE*	E	1587	4A-L,4A-LC	A			05/83 ▸ 09/87	8942815011	**820237**	85		90		16X1.5					
1.8 D	*CE80LE, CE80RE*	D	1839	1C-L	M			05/83 ▸ 09/87	8942815030	**820325**	85		90		16X1.5					
Corolla (90) (87>92)																				
1.3	*EE90LA, EE90RA*	E	1295	2E, 2E-E	M			05/87 ▸ 05/92	8942820060	**820326**	85		90		16X1.5					
1.3	*EE90RA, EE90LA*	E	1295	2E, 2E-E	A			05/87 ▸ 05/92	8942820060	**820326**	85		90		16X1.5					
1.6,1.6 16V	*AE95LC, AE95LA, AE92LA AE92RA, AE95RA, AE95RC*	E	1587	4A-F,4A-FE,4A-GE	M			05/87 ▸ 05/92	8942815011	**820237**	85		90		16X1.5					
1.6,1.6 16V	*AE92RA, AE92LA*	E	1587	4A-F,4A-FE	A			05/87 ▸ 05/92	8942815011	**820237**	85		90		16X1.5					
1.8 D	*CE90LA, CE90RA*	D	1839	1C	M			05/87 ▸ 05/92	8942815030	**820325**	85		90		16X1.5					
MR 2 (AW20)																				
2.0 i 16V	*SW20RA, SW20LA, SW20KA*	E	1998	3S-GE, 3S-GEC, 3S-GEW, 3S-FE	M			10/89 ▸ 11/92	8942815030	**820325**	85		90		16X1.5					
2.0 i 16V	*SW20RA*	E	1998	3S-FE	A			12/89 ▸ 12/91	8942815030	**820325**	85		90		16X1.5					
Paseo (95>99)																				
1.5 i 16V	*EL54LD, EL54RD*	E	1496	5E-FE	M			08/95 ▸ 07/99	8942812160	**820338**	87		92		16X1.5					
1.5 i 16V	*EL54LD, EL54RD*	E	1496	5E-FE	A			08/95 ▸ 07/99	8942812160	**820338**	87		92		16X1.5					
Starlet (EP/NP8) (89>95)																				
1.3,1.3 i	*EP81LA, EP81RA*	E	1295	2E, 2E-E	M			12/89 ▸ 12/95	8942812160	**820338**	87		92		16X1.5					
1.3,1.3 i	*EP81LA, EP81RA*	E	1295	2E, 2E-E	M			12/89 ▸ 12/95	8942820060	**820326**	85		90		16X1.5					
1.3,1.3 i	*EP81LA*	E	1295	2E-E, 2E	A			12/89 ▸ 12/95	8942820060	**820326**	85		90		16X1.5					
1.3	*EP81LA*	E	1295	2E	A			12/89 ▸ 12/95	8942812160	**820338**	87		92		16X1.5					
1.5 D	*NP80LA*	D	1453	1N	M			12/89 ▸ 12/95	8942812160	**820338**	87		92		16X1.5					
1.5 D	*NP80LA*	D	1453	1N	M			12/89 ▸ 12/95	8942820060	**820326**	85		90		16X1.5					
1.0	*EP80RA, EP80LA*	E	999	1E	M			12/89 ▸ 12/92	8942820060	**820326**	85		90		16X1.5					
1.0	*EP80RA, EP80LA*	E	999	1E	M			12/89 ▸ 12/92	8942812160	**820338**	87		92		16X1.5					
Starlet (KP6) (78>84)																				
1.2	*KP62LP, KP62RP*	E	1166	3K-H	M			05/80 ▸ 08/82	8942810050	**820332**	92		97		16X1.5					
1.3	*KP61LP, KP61RP, KP61LV*	E	1290	4K	M			08/81 ▸ 10/84	8942810050	**820332**	92		97		16X1.5					
1.3	*KP61LP, KP61RP*	E	1290	4K	A			08/81 ▸ 10/84	8942810050	**820332**	92		97		16X1.5					
1.0	*KP60RP, KP60LP, KP60LV*	E	993	2K	M			05/80 ▸ 10/84	8942810050	**820332**	92		97		16X1.5					
Tercel (AL1)																				
1.3	*AL11*	E	-		M			1978 ▸ 05/82	8942815030	**820325**	85		90		16X1.5					
Tercel (AL2)																				
1.3	*AL20LZ, AL20RZ*	E	1295	2A	M			05/82 ▸ 08/84	8942815030	**820325**	85		90		16X1.5					
1.3	*AL20RZ, AL20LZ*	E	1295	2A	A			05/82 ▸ 08/84	8942815030	**820325**	85		90		16X1.5					
1.5	*AL25RG, AL25LG, AL21LZ*	E	1452	3A-C, 3A	M			08/82 ▸ 01/88	8942815030	**820325**	85		90		16X1.5					
1.5	*AL21LZ*	E	1452	3A-C	A			09/82 ▸ 08/84	8942815030	**820325**	85		90		16X1.5					
Tercel (EL5)																				
1.5 i 16V	*EL53LA*	E	1496	5E-FE	M			09/94 ▸ 07/99	8942812160	**820338**	87		92		16X1.5					

• **New** Nouveau **Nuevo** Novo **Nuovo** Nieuw **Neu** Yeni Новый Nou

		Type Ctr.		cc		AC			OE	Valeo	(°)C T1	T2	T3	T4	COD.	mm	
TOYOTA (.../...)																				
Tercel (EL5) (.../...)																				
1.5 i 16V	*EL53LA*	E	1496	5E-FE	A			09/94 ▸ 07/99	8942812160	**820338**	87		92		16X1.5		
Yaris Verso																				
1.3 i 16V	*NCP22R, NCP20L, NCP20R NCP22L*	E	1299	2NZ-FE	M			08/99 ▸	8942812160	**820338**	87		92		16X1.5		
1.3 i 16V	*NCP20L, NCP20R*	E	1299	2NZ-FE	A			08/99 ▸	8942812160	**820338**	87		92		16X1.5		
1.4 D-4D	*NLP20L, NLP20R, NLP22R NLP22L*	D	1364	1ND-TV	M			10/01 ▸	8942812160	**820338**	87		92		16X1.5		
1.5 VVT-i 16V	*NCP21L, NCP21R*	E	1497	1NZ-FE	M			03/00 ▸	8942812160	**820338**	87		92		16X1.5		
VAUXHALL																				
Astra II (84>91)																				
1.2 J2791968 ▸		E	1196	12ST	M			1988 ▸ 09/91	90242277	**819830**	95		100		22X1.5	29	
1.2 JE222259 ▸		E	1196	12ST	M		+ Cable	1988 ▸ 09/91	90340497	**819829**	95		100		22X1.5	29	
1.2 ▸ J2791967		E	1196	12ST	M			10/84 ▸ 1988	90108636	**819746**	95		100		22X1.5	29	
1.3 J5273428 ▸		E	1297	13S	M			1988 ▸ 10/89	90242277	**819830**	95		100		22X1.5	29	
1.3 J2791968 ▸		E	1297	13S	M		+ Cable	1988 ▸ 10/89	90340497	**819829**	95		100		22X1.5	29	
1.3 ▸ J5273427		E	1297	13S	M			10/84 ▸ 1988	90108636	**819746**	95		100		22X1.5	29	
1.4 i	*TC15J, TC35J, TC08J/J/X, TD08J TD35J, TD48J, TC48J/J/X*	E	1389	C14NZ	M			10/89 ▸ 09/91	90242277	**819830**	95		100		22X1.5	29	
1.6 i J5273428 ▸	*TC48B, TD08R, TD35B, TD48B, TC08/B*	E	1598	C16NZ, 16SV	M			1988 ▸ 09/91	90242277	**819830**	95		100		22X1.5	29	
1.6 i J2791968 ▸	*TC48B, TD35B*	E	1598	C16NZ	M		+ Cable	1988 ▸ 09/91	90340497	**819829**	95		100		22X1.5	29	
1.6 i J5273428 ▸	*TC48B, TD35B, TD48B, TC08/B*	E	1598	C16NZ	A			1988 ▸ 09/91	90242277	**819830**	95		100		22X1.5	29	
1.6 i JE222259 ▸	*TC48B, TD35B*	E	1598	C16NZ	A		+ Cable	1988 ▸ 09/91	90340497	**819829**	95		100		22X1.5	29	
1.6,1.6 i ▸ J5273427	*TD35B, TD48B, TC48/B*	E	1598	16SV, C16NZ	M			10/84 ▸ 1988	90108636	**819746**	95		100		22X1.5	29	
1.6,1.6 i ▸ J5273427	*TD35B, TD48B, TC48/B*	E	1598	C16NZ, 16SV	A			10/84 ▸ 1988	90108636	**819746**	95		100		22X1.5	29	
1.8 i J5273428 ▸	*TC35E, TC48E, TD48E, TC08/E*	E	1796	18SE	M			1988 ▸ 09/91	90242277	**819830**	95		100		22X1.5	29	
1.8 i	*TD48E*	E	1796	18SE	A			01/89 ▸ 09/91	90242277	**819830**	95		100		22X1.5	29	
1.8 i ▸ J2791967	*TC35E, TC48E, TC08/E*	E	1796	18SE	M			10/84 ▸ 1988	90108636	**819746**	95		100		22X1.5	29	
2.0 i J2791968 ▸	*TD08H*	E	1998	20SEH, C20NE	M		+ Cable	1988 ▸ 09/91	90340497	**819829**	95		100		22X1.5	29	
Calibra																				
2.0 i 16V,2.0 i Turbo	*JM07*	E	1998	C20LET, X20XEV	M	+/-		06/90 ▸	90355880	**820037**	90	100	95	105	22X1.5	29	
2.0 i,2.0 i 16V	*JM07/1/D*	E	1998	C20XE, C20NE	M	+/-		06/90 ▸ 08/96	90242277	**819830**	95		100		22X1.5	29	
2.0 i,2.0 i 16V 2.0 i Turbo	*JM07//1/D*	E	1998	C20XE, C20NE, C20LET	M	+/-		06/90 ▸	90339500	**820038**	95		100		22X1.5	29	
2.0 i,2.0 i 16V 2.0 i Turbo	*JM07//1/D*	E	1998	C20XE, X20XEV, C20LET, C20NE	M	+/-		06/90 ▸	90357303	**820242**	82		87		22X1.5	29	
2.0 i,2.0 i 16V 2.0 i Turbo	*JM07//1/D*	E	1998	C20NE, X20XEV, C20XE, C20LET	M	+		06/90 ▸	90376209	**820311**	100	115	105	120	22X1.5	29	
2.0 i	*JM07D*	E	1998	C20NE	A	+/-		06/90 ▸ 08/96	90242277	**819830**	95		100		22X1.5	29	
2.0 i	*JM07D*	E	1998	C20NE	A	+/-		06/90 ▸ 08/96	90357303	**820242**	82		87		22X1.5	29	
2.0 i,2.0 i 16V	*JM07//D*	E	1998	C20NE, X20XEV	A	+		06/90 ▸ 06/97	90376209	**820311**	100	115	105	120	22X1.5	29	
2.0 i	*JM07D*	E	1998	C20NE	A	-		06/90 ▸ 08/96	90339500	**820038**	95		100		22X1.5	29	
2.0 i 16V	*JM07*	E	1998	X20XEV	A	-		02/94 ▸ 06/97	90355880	**820037**	90	100	95	105	22X1.5	29	
2.5 i V6,2.5 i V6 24V	*JM07*	E	2498	C25XE,X25XE	M	-		08/93 ▸ 07/97	90355879	**820036**	95	105	100	110	22x1.5	29	

• **New** Nouveau **Nuevo** Novo **Nuovo** Nieuw **Neu** Yeni Новый Nou

		Type Ctr.		cc		AC			OE	Valeo	(°)C T1	T2	T3	T4	COD.	○: mm	
VAUXHALL (.../...)																		
Calibra (.../...)																		
2.5 i V6,2.5 i V6 24V	JM07	E	2498	C25XE,X25XE	A	-		08/93 ▸ 07/97	90355879	**820036**	95	105	100	110	22x1.5	29
Carlton																		
1.8,1.8 i	VF19/E/R, VF35/E/R, VM19 E/R, VM35/E/R	E	1796	18SEH, 18SV	M	+/-		11/86 ▸ 08/92	90108636	**819746**	95		100		22X1.5	29
1.8,1.8 i	VF19/E/R, VF35/E/R, VM19 E/R, VM35/E/R	E	1796	18SEH, 18SV	A	+/-		11/86 ▸ 08/92	90108636	**819746**	95		100		22X1.5	29
2.0 i ▸P1132204	VF35D, VM19I, VM35I, VF19/D	E	1998	C20NE	M	+/-		1993 ▸ 05/94	90277288	**819830**	95		100		22X1.5	29
2.0 i ▸P1132204	VF35D, VF19/D, VM35I, VM19/I/T	E	1998	C20NE	A	+/-		1993 ▸ 05/94	90277288	**819830**	95		100		22X1.5	29
2.0 i ▸P1132203	VF35D, VF19/D, VM19/I/T, VM35/I/T	E	1998	C20NE, 20SE	M	+/-		11/86 ▸ 1993	90108636	**819746**	95		100		22X1.5	29
2.0 i ▸P1132203	VF35D, VF19/D, VM19/I/T, VM35/I/T	E	1998	C20NE, 20SE	A	+/-		11/86 ▸ 1993	90108636	**819746**	95		100		22X1.5	29
2.6 i ▸P1132204	VM19L, VM35L	E	2594	C26NE	M	+/-		1993 ▸ 05/94	90277288	**819830**	95		100		22X1.5	29
2.6 i ▸P1132204	VM19L, VM35L	E	2594	C26NE	A	+/-		1993 ▸ 05/94	90277288	**819830**	95		100		22X1.5	29
2.6 i ▸P1132203	VM19L, VM35L	E	2594	C26NE	M	+/-		09/90 ▸ 1993	90108636	**819746**	95		100		22X1.5	29
2.6 i ▸P1132203	VM19L, VM35L	E	2594	C26NE	A	+/-		09/90 ▸ 1993	90108636	**819746**	95		100		22X1.5	29
3.0 i,3.0 i 24V		E	2968	30NE, C30SE	M	+/-		03/87 ▸	90108636	**819746**	95		100		22X1.5	29
3.0 i		E	2968	30NE	M	+		03/87 ▸ 09/90	90277288	**819830**	95		100		22X1.5	29
2.3 D,2.3 TD Turbo ▸K1000099		D	2260	23DTR, 23YD	M	-		1989 ▸ 05/94	90277288	**819830**	95		100		22X1.5	29
2.3 D,2.3 TD Turbo		D	2260	23YDT, 23DTR, 23YD	M	-		11/86 ▸ 1989	90108636	**819746**	95		100		22X1.5	29
Cavalier II (81>88)																		
1.3	9JF6/8/9, 9JM6/8/9	E	1297	13S	M			08/81 ▸ 08/88	90108636	**819746**	95		100		22X1.5	29
1.6		E	1598	16S	M			08/81 ▸ 08/88	90108636	**819746**	95		100		22X1.5	29
1.8 i	0FJ6/8/9, 0JM6/8/9	E	1796	18SE, 18E	M			10/82 ▸ 08/88	90108636	**819746**	95		100		22X1.5	29
2.0 i		E	1998	20SEH, 20NE	M			09/86 ▸	90108636	**819746**	95		100		22X1.5	29
1.6 D		D	1598	16D	M			09/82 ▸ 08/88	90108636	**819746**	95		100		22X1.5	29
Nova																		
1.0 ▸K400001	SF11M, SF19M, SF68M, SF08/M	E	993	10S	M			01/89 ▸ 03/92	90242277	**819830**	95		100		22X1.5	29
1.0 ▸J499999	SF11M, SF19M, SF68M, SF08/M	E	993	10S	M			04/83 ▸ 12/88	90108636	**819746**	95		100		22X1.5	29
1.2,1.2 i ▸K400001	SF11N, SF19N, SF68N, SF08/N	E	1196	12NV, 12ST, C12NZ	M			01/89 ▸ 03/93	90242277	**819830**	95		100		22X1.5	29
1.2 ▸J499999	SF11N, SF19N, SF68N, SF08/N	E	1196	12ST, 12NV	M			04/83 ▸ 12/88	90108636	**819746**	95		100		22X1.5	29
1.3 ▸K400001		E	1297	13SB	M			01/89 ▸ 09/89	90242277	**819830**	95		100		22X1.5	29
1.3 ▸J499999		E	1297	13SB	M			07/83 ▸ 12/88	90108636	**819746**	95		100		22X1.5	29
1.4,1.4 i	SF19X, SF68X, SF08/J/X	E	1389	C14NZ, 14NV	M			10/89 ▸ 03/93	90242277	**819830**	95		100		22X1.5	29
1.6 i	SF08P	E	1598	C16SE, E16SE	M			01/89 ▸ 03/93	90242277	**819830**	95		100		22X1.5	29
1.6 i ▸J499999		E	1598	E16SE	M			05/88 ▸ 12/88	90108636	**819746**	95		100		22X1.5	29
1.5 D,1.5 TD ▸L400001	SF08/D, SF68/B/F	D	1488	T4EC1, 4EC1	M			01/90 ▸ 03/93	90339408	**820037**	90	100	95	105	22X1.5	29
Omega																		
2.0 i,2.0 i 16V	F69, M35	E	1998	X20XEV, X20SE	M	+		04/94 ▸	90376209	**820311**	100	115	105	120	22X1.5	29
2.0 i,2.0 i 16V	F69, M35	E	1998	X20XEV, X20SE	M	+		04/94 ▸	90242277	**819830**	95		100		22X1.5	29
2.0 i,2.0 i 16V	F69, M35	E	1998	X20XEV, X20SE	M	-		04/94 ▸	90339409	**820037**	90	100	95	105	22X1.5	29
2.0 i,2.0 i 16V	F69, M35	E	1998	X20XEV, X20SE	A	+		04/94 ▸	90242277	**819830**	95		100		22X1.5	29
2.0 i,2.0 i 16V	F69, M35	E	1998	X20XEV, X20SE	A	+		04/94 ▸	90376209	**820311**	100	115	105	120	22X1.5	29
2.0 i,2.0 i 16V	F69, M35	E	1998	X20XEV, X20SE	A	-		04/94 ▸	90339409	**820037**	90	100	95	105	22X1.5	29
2.5 i V6 24V ▸T1003098	F69, M35	E	2498	X25XE-170	M	+		1996 ▸	90376209	**820311**	100	115	105	120	22X1.5	29

• **New** Nouveau **Nuevo** Novo **Nuovo** Nieuw **Neu** Yeni Новый Nou

Valeo

Thermoswitch
Thermocontact
Termocontacto
Termocontato
Termocontatto
Thermokontakt
Thermoschalter

Włącznik wentylatora
Tepelný spínač
Termokapcsoló
Termocontact
Fan müşiri
ТЕРМОДАТЧИК

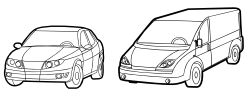 Type Ctr.		cc		AC		2 3	OE	Valeo	(°)C T1	T2	T3	T4	COD.	mm
VAUXHALL (.../...)														
Omega (.../...)														
2.5 i V6 24V	*F69, M35*	E	2498	X25XE-170	M	-		1995 ▸	90458540	**820309**	95	105	100	110	22X1.5	29
2.5 i V6 24V	*F69, M35*	E	2498	X25XE-170	M	-		1996 ▸	90339409	**820037**	90	100	95	105	22X1.5	29
T1056693 ▸																
2.5 i V6 24V	*F69, M35*	E	2498	X25XE-170	M	-		04/94 ▸	90277288	**819830**	95		100		22X1.5	29
T1003098 ▸																
2.5 i V6 24V	*F69, M35*	E	2498	X25XE-170	A	+		1996 ▸	90376209	**820311**	100	115	105	120	22X1.5	29
T1003098 ▸																
2.5 i V6 24V	*F69, M35*	E	2498	X25XE-170	A	-		1996 ▸	90339409	**820037**	90	100	95	105	22X1.5	29
T1056693 ▸																
2.5 i V6 24V	*F69, M35*	E	2498	X25XE-170	A	-		04/94 ▸	90458540	**820309**	95	105	100	110	22X1.5	29
2.5 i V6 24V	*F69, M35*	E	2498	X25XE-170	A	-		04/94 ▸	90277288	**819830**	95		100		22X1.5	29
▸ T1003097																
3.0 i,3.0 i V6	*F69, M35*	E	2962	X30XE	M	+		1996 ▸	90376209	**820311**	100	115	105	120	22X1.5	29
T1003098 ▸																
3.0 i,3.0 i V6	*F69, M35*	E	2962	X30XE	M	-		1996 ▸	90339409	**820037**	90	100	95	105	22X1.5	29
T1056693 ▸																
3.0 i,3.0 i V6	*F69, M35*	E	2962	X30XE	M	-		06/94 ▸	90458540	**820309**	95	105	100	110	22X1.5	29
3.0 i,3.0 i V6	*F69, M35*	E	2962	X30XE	A	+		1996 ▸	90376209	**820311**	100	115	105	120	22X1.5	29
T1003098 ▸																
3.0 i,3.0 i V6	*F69, M35*	E	2962	X30XE	A	-		1996 ▸	90339409	**820037**	90	100	95	105	22X1.5	29
T1056693 ▸																
3.0 i,3.0 i V6	*F69, M35*	E	2962	X30XE	A	-		06/94 ▸	90458540	**820309**	95	105	100	110	22X1.5	29
3.0 i,3.0 i V6	*F69, M35*	E	2962	X30XE	M	-		06/94 ▸	90277288	**819830**	95		100		22X1.5	29
▸ T1003097																
3.0 i,3.0 i V6	*F69, M35*	E	2962	X30XE	A	-		06/94 ▸	90277288	**819830**	95		100		22X1.5	29
▸ T1003097																
2.5 TD	*F69, M35*	D	2497	U25TD, X25TD	M	+		04/94 ▸	90307873	**820212**	92		97		22X1.5	29
2.5 TD	*F69, M35*	D	2497	X25TD, U25TD	M	+		04/94 ▸	90491319	**820312**	100	110	105	115	22X1.5	29
2.5 TD	*F69, M35*	D	2497	X25TD, U25TD	M	-		04/94 ▸	90339409	**820037**	90	100	95	105	22X1.5	29
2.5 TD	*F69, M35*	D	2497	U25TD, X25TD	A	+		04/94 ▸	90491319	**820312**	100	110	105	115	22X1.5	29
2.5 TD	*F69, M35*	D	2497	U25TD, X25TD	A	+		04/94 ▸	90307873	**820212**	92		97		22X1.5	29
2.5 TD	*F69, M35*	D	2497	U25TD, X25TD	A	-		04/94 ▸	90339409	**820037**	90	100	95	105	22X1.5	29
Senator (87>93)																
2.5 i	*P19*	E	2490	25NE	M			▸ 09/90	90277288	**819830**	95		100		22X1.5	29
0053436 ▸																
2.5 i	*P19*	E	2490	25NE	A			▸ 09/90	90277288	**819830**	95		100		22X1.5	29
0053436 ▸																
2.5 i	*P19*	E	2490	25NE	M			09/87 ▸	90108636	**819746**	95		100		22X1.5	29
▸ 0053435																
2.5 i	*P19*	E	2490	25NE	A			09/87 ▸	90108636	**819746**	95		100		22X1.5	29
▸ 0053435																
3.0 i,3.0 i 24V	*P19, VP19Q*	E	2968	30NE, C30NE, C30SE	M			▸ 08/93	90277288	**819830**	95		100		22X1.5	29
0109242 ▸																
3.0 i,3.0 i 24V	*P19, VP19Q*	E	2968	30NE, C30SE, C30NE	A			▸ 08/93	90277288	**819830**	95		100		22X1.5	29
0109242 ▸																
3.0 i,3.0 i 24V	*P19, VP19Q*	E	2968	C30NE, C30SE, 30NE	M			09/87 ▸	90108636	**819746**	95		100		22X1.5	29
▸ 0011334																
3.0 i,3.0 i 24V	*P19, VP19Q*	E	2968	C30NE, C30SE, 30NE	A			09/87 ▸	90108636	**819746**	95		100		22X1.5	29
▸ 0011334																
Sintra																
2.2 i	*U06A*	E	2198	X22XE	M			03/96 ▸ 12/99	90277288	**819830**	95		100		22X1.5	29
3.0 i V6	*U06B*	E	2962	X30XE	A	-		03/96 ▸ 12/99	90277288	**819830**	95		100		22X1.5	29
Tigra																
1.4 i 16V	*F07*	E	1389	X14XE	M			11/94 ▸	90242277	**819830**	95		100		22X1.5	29
1.4 i 16V	*F07*	E	1389	X14XE	A			02/95 ▸	90242277	**819830**	95		100		22X1.5	29
1.4 i 16V	*F07*	E	1389	X14XE	M	+	+ Cable	11/94 ▸ 01/01	90482428	**820227**	115	100	120	105	22x1.5	29
1.4 i 16V	*F07*	E	1389	X14XE	A	+	+ Cable	02/95 ▸ 01/01	90482428	**820227**	115	100	120	105	22x1.5	29
1.6 i 16V	*F07*	E	1598	X16XE	M			11/94 ▸	90242277	**819830**	95		100		22X1.5	29
1.6 i 16V	*F07*	E	1598	X16XE	M	+	+ Cable	11/94 ▸ 01/01	90482428	**820227**	115	100	120	105	22x1.5	29
Vectra (95>2002)																
1.6 i,1.6 i 16V	*JF19, JF68*	E	1598	X16XEL, X16SZR	M	+		10/95 ▸	90506498	**820241**	100	95	105	100	2	

• **New** Nouveau **Nuevo** Novo **Nuovo** Nieuw **Neu** Yeni Новый Nou

		Type Ctr.		cc			AC			OE	Valeo	(°)C T1	T2	T3	T4	COD.	○: mm	
VAUXHALL (.../...)																		
Vectra (95>2002) (.../...)																		
1.6 i,1.6 i 16V	*JF19, JF68*	E	1598	X16XEL, X16SZR	M	-		10/95 ▸		90242277	**819830**	95		100		22X1.5	29
1.6 i 16V	*JF19, JF68*	E	1598	X16XEL	A	+		10/95 ▸		90506498	**820241**	100	95	105	100	2	
1.6 i 16V	*JF19, JF68*	E	1598	X16XEL	A	-		10/95 ▸		90242277	**819830**	95		100		22X1.5	29
1.8 i 16V	*JF35, JF68, JF19*	E	1799	X18XE	M	+/-		10/95 ▸		90506498	**820241**	100	95	105	100	2	
1.8 i 16V	*JF35, JF68, JF19*	E	1799	X18XE	A	+/-		10/95 ▸		90506498	**820241**	100	95	105	100	2	
2.0 i 16V	*JF35, JF68, JF19*	E	1998	X20XEV	M	+/-		10/95 ▸		90506498	**820241**	100	95	105	100	2	
2.0 i 16V	*JF35, JF68, JF19*	E	1998	X20XEV	A	+/-		10/95 ▸		90506498	**820241**	100	95	105	100	2	
2.5 i V6 24V	*JF35, JF68, JF19*	E	2498	X25XE-170	M	+		10/95 ▸		90506498	**820241**	100	95	105	100	2	
2.5 i V6 24V	*JF35, JF68, JF19*	E	2498	X25XE-170	M	-		10/95 ▸		90506497	**820310**	100	105	105	110	22X1.5	29
2.5 i V6 24V	*JF35, JF68, JF19*	E	2498	X25XE-170	M			10/95 ▸ 03/02		90506496	**819830**	95		100		22X1.5	29
2.5 i V6 24V	*JF35, JF68, JF19*	E	2498	X25XE-170	A	+		10/95 ▸		90506498	**820241**	100	95	105	100	2	
2.5 i V6 24V	*JF35, JF68, JF19*	E	2498	X25XE-170	A	-		10/95 ▸		90506497	**820310**	100	105	105	110	22X1.5	29
2.5 i V6 24V	*JF35, JF68, JF19*	E	2498	X25XE-170	A			10/95 ▸ 03/02		90506496	**819830**	95		100		22X1.5	29
2.0 Di 16V	*JF35, JF68, JF19*	D	1995	X20DTL	M	+		08/96 ▸		90506498	**820241**	100	95	105	100	2	
2.0 Di 16V	*JF35, JF68, JF19*	D	1995	X20DTL	M	-		08/96 ▸		90506497	**820310**	100	105	105	110	22X1.5	29
2.0 Di 16V	*JF35, JF68, JF19*	D	1995	X20DTL	M			08/96 ▸ 01/99		90506496	**819830**	95		100		22X1.5	29
VAUXHALL																		
Combo																		
1.4 i		E	1389	C14NZ	M	+		10/93 ▸ 09/01		90357303	**820242**	82		87		22X1.5	29
1.4 i		E	1389	C14NZ	M			10/93 ▸ 09/01		90242277	**819830**	95		100		22X1.5	29
1.7 D		D	1686	X17D	M			10/93 ▸ 09/01		90341759	**820308**	82	90	87	95	22X1.5	29
VOLKSWAGEN																		
Bora																		
1.4 i 16V	*1J2/0/1/2, 1J6/0/1/2*	E	1390	BCA, AXP, AKQ, AHW, APE	M	+/-		09/98 ▸ 05/05		867959481	**820034**	84		95		22X1.5	29
1.4 i 16V	*1J2/0/1/2, 1J6/0/1/2*	E	1390	AHW,AKQ,APE,AXP,BCA	M			09/98 ▸ 05/05		1J0959481A	●**820831**	85		90		22X1.5	29
1.4 i 16V	*1J2/0/1/2, 1J6/0/1/2*	E	1390	AHW,AKQ,APE,AXP,BCA	M	-		09/98 ▸ 05/05		1J0959481	**820302**	90		95		22X1.5	29
1.6 FSI 16V,1.6 i 1.6 i 16V,1.6 i 16V 16V	*1J2/0/1/2/3/5, 1J6/0/1/2 3/5*	E	1595	AKL, AUS, AEH, APF, AZD, ATN BFQ, BAD, BCB	M	+/-		09/98 ▸ 05/05		867959481	**820034**	84		95		22X1.5	29
1.6 i	*1J2/0/1/2/3/5, 1J6/0/1/2/3/5*	E	1595	APF, AKL, AVU, AEH, BFQ	A	+/-		09/98 ▸ 05/05		867959481	**820034**	84		95		22X1.5	29
1.6 FSI 16V,1.6 i 1.6 i 16V	*1J2/0/1/2/3/5, 1J6/0/1/2 3/5*	E	1595	AEH,AKL,APF,ATN,AUS,AZD,BAD BCB,BFQ	M			09/98 ▸ 05/05		1J0959481A	●**820831**	85		90		22X1.5	29
1.6 i	*1J2/0/1/2/3/5, 1J6/0/1/2/3/5*	E	1595	AEH,AKL,APF,AVU,BFQ	A			09/98 ▸ 05/05		1J0959481A	●**820831**	85		90		22X1.5	29
1.6 FSI 16V,1.6 i 1.6 i 16V	*1J2/0/1/2/3/5, 1J6/0/1/2 3/5*	E	1595	AEH,AKL,APF,ATN,AUS,AZD,BAD BCB,BFQ	M	-		09/98 ▸ 05/05		1J0959481	**820302**	90		95		22X1.5	29
1.6 i	*1J2/0/1/2/3/5, 1J6/0/1/2/3/5*	E	1595	AEH,AKL,APF,AVU,BFQ	A	-		09/98 ▸ 05/05		1J0959481	**820302**	90		95		22X1.5	29
1.8 i 20V,1.8 i Turbo 20V	*1J2/0/1/2/3/5, 1J6/0/1/2 3/5*	E	1781	AUM, AGN, AGU, AUQ	M	+/-		02/99 ▸ 05/05		867959481	**820034**	84		95		22X1.5	29
1.8 i 20V,1.8 i Turbo 20V	*1J2/0/1/2/3/5, 1J6/0/1/2 3/5*	E	1781	AGU, ARX, AGN, AUM	A	+/-		02/99 ▸ 05/05		867959481	**820034**	84		95		22X1.5	29
1.8 i 20V,1.8 i Turbo 20V	*1J2/0/1/2/3/5, 1J6/0/1/2 3/5*	E	1781	AGN,AGU,AUM,AUQ	M			02/99 ▸ 05/05		1J0959481A	●**820831**	85		90		22X1.5	29
1.8 i 20V,1.8 i Turbo 20V	*1J2/0/1/2/3/5, 1J6/0/1/2 3/5*	E	1781	AGN,AGU,ARX,AUM	A			02/99 ▸ 05/05		1J0959481A	●**820831**	85		90		22X1.5	29
1.8 i Turbo 20V	*1J22, 1J23, 1J62, 1J63*	E	1781	AGU,AUM	A	+		05/00 ▸ 05/05		191919369A	●**820833**			120		20	
1.8 i Turbo 20V	*1J63, 1J22, 1J23, 1J62*	E	1781	AGU,AUM,AUQ	M	+		09/00 ▸ 05/05		191919369A	●**820833**			120		20	
1.8 i 20V,1.8 i Turbo 20V	*1J2/0/1/2/3/5, 1J6/0/1/2 3/5*	E	1781	AGN,AGU,AUM,AUQ	M	-		02/99 ▸ 05/05		1J0959481	**820302**	90		95		22X1.5	29
1.8 i 20V,1.8 i Turbo 20V	*1J2/0/1/2/3/5, 1J6/0/1/2 3/5*	E	1781	AGN,AGU,ARX,AUM	A	-		02/99 ▸ 05/05		1J0959481	**820302**	90		95		22X1.5	29
2.0 i	*1J2/0/1/2/3/5, 1J6/0/1/2/3/5*	E	1984	AZJ, AQY, AZH, APK	M	+/-		09/98 ▸ 05/05		867959481	**820034**	84		95		22X1.5	29
2.0 i	*1J2/0/1/2/3/5, 1J6/0/1/2/3/5*	E	1984	APK, AQY, AZH, AZJ	A	+/-		09/98 ▸ 05/05		867959481	**820034**	84		95		22X1.5	29
2.0 i	*1J2/0/1/2/3/5, 1J6/0/1/2/3/5*	E	1984	APK,AQY,AZH,AZJ	M			09/98 ▸ 05/05		1J0959481A	●**820831**	85		90		22X1.5	29
2.0 i	*1J2/0/1/2/3/5, 1J6/0/1/2/3/5*	E	1984	APK,AQY,AZH,AZJ	A			09/98 ▸ 05/05		1J0959481A	●**820831**	85		90		22X1.5	29
2.0 i	*1J2/0/1/2/3/5, 1J6/0/1/2/3/5*	E	1984	APK,AQY,AZH,AZJ	M	-		09/98 ▸ 05/05		1J0959481	**820302**	90		95		22X1.5	29
2.0 i	*1J2/0/1/2/3/5, 1J6/0/1/2/3/5*	E	1984	APK,AQY,AZH,AZJ	A	-		09/98 ▸ 05/05		1J0959481	**820302**	90		95		22X1.5	29
2.3 i V5 20V	*1J2/0/1/2/3/5, 1J6/0/1/2 3/5*	E	2324	AGZ, AQN	M	+/-		09/98 ▸ 05/05		867959481	**820034**	84		95		22X1.5	29

• **New** Nouveau **Nuevo** Novo **Nuovo** Nieuw **Neu** Yeni Новый Nou

		Type Ctr.		cc		AC			OE	Valeo	(°)C T1	T2	T3	T4	COD.	mm	
VOLKSWAGEN (.../...)																			
Bora (.../...)																			
2.3 i V5 20V	*1J2/0/1/2/3/5, 1J6/0/1/2 3/5*	E	2324	AQN, AGZ	A	+/-		09/98 ▸ 05/05	867959481	**820034**	84		95		22X1.5	29	
2.3 i V5 20V	*1J2/0/1/2/3/5, 1J6/0/1/2 3/5*	E	2324	AGZ,AQN	M			09/98 ▸ 05/05	1J0959481A	**●820831**	85		90		22X1.5	29	
2.3 i V5 20V	*1J2/0/1/2/3/5, 1J6/0/1/2 3/5*	E	2324	AGZ,AQN	A			09/98 ▸ 05/05	1J0959481A	**●820831**	85		90		22X1.5	29	
2.3 i V5 20V	*1J2/0/1/2/3/5, 1J6/0/1/2 3/5*	E	2324	AGZ,AQN	M	-		09/98 ▸ 05/05	1J0959481	**820302**	90		95		22X1.5	29	
2.3 i V5 20V	*1J2/0/1/2/3/5, 1J6/0/1/2 3/5*	E	2324	AGZ,AQN	A	-		09/98 ▸ 05/05	1J0959481	**820302**	90		95		22X1.5	29	
2.8 i VR6 24V	*1J2/3/5/6, 1J6/3/5/6*	E	2792	AUE, AQP, BDE	M	+/-		05/99 ▸ 05/03	867959481	**820034**	84		95		22X1.5	29	
2.8 i VR6 24V	*1J2/3/5/6, 1J6/3/5/6*	E	2792	AUE, AQP, BDE	A	+/-		05/99 ▸ 05/03	867959481	**820034**	84		95		22X1.5	29	
2.8 i VR6 24V	*1J2/3/5/6, 1J6/3/5/6*	E	2792	AQP,AUE,BDE	M			05/99 ▸ 05/03	1J0959481A	**●820831**	85		90		22X1.5	29	
2.8 i VR6 24V	*1J2/3/5/6, 1J6/3/5/6*	E	2792	AQP,AUE,BDE	A			05/99 ▸ 05/03	1J0959481A	**●820831**	85		90		22X1.5	29	
2.8 i VR6 24V	*1J2/3/5/6, 1J6/3/5/6*	E	2792	AQP,AUE,BDE	M	-		05/99 ▸ 05/03	1J0959481	**820302**	90		95		22X1.5	29	
2.8 i VR6 24V	*1J2/3/5/6, 1J6/3/5/6*	E	2792	AQP,AUE,BDE	A	-		05/99 ▸ 05/03	1J0959481	**820302**	90		95		22X1.5	29	
1.9 SDi,1.9 TDi	*1J2/0/1/2/3/5, 1J6/0/1/2 3/5*	D	1896	AJM, ASZ, ALH, AGR, AUY, ARL ATD, AHF, AXR, ASV, AQM, AGP	M	+/-		09/98 ▸ 05/05	867959481	**820034**	84		95		22X1.5	29	
1.9 TDi	*1J2/0/1/2/3/5, 1J6/0/1/2 3/5*	D	1896	ATD, AJM, ALH, AHF, AGR, AUY ARL, ASZ	A	+/-		09/98 ▸	867959481	**820034**	84		95		22X1.5	29	
1.9 SDi,1.9 TDi	*1J2/0/1/2/3/5, 1J6/0/1/2 3/5*	D	1896	AGP,AGR,AHF,AJM,ALH,AQM,ARL ASV,ASZ,ATD,AUY,AXR	M			09/98 ▸ 05/05	1J0959481A	**●820831**	85		90		22X1.5	29	
1.9 TDi	*1J2/0/1/2/3/5, 1J6/0/1/2 3/5*	D	1896	AGR,AHF,AJM,ALH,ARL,ASZ,ATD AUY	A			09/98 ▸ 05/05	1J0959481A	**●820831**	85		90		22X1.5	29	
1.9 SDi,1.9 TDi	*1J2/0/1/2/3/5, 1J6/0/1/2 3/5*	D	1896	AGP,AGR,AHF,AJM,ALH,AQM,ARL ASV,ASZ,ATD,AUY,AXR	M	+/-		09/98 ▸ 05/05	1J0959481	**820302**	90		95		22X1.5	29	
1.9 TDi	*1J2/0/1/2/3/5, 1J6/0/1/2 3/5*	D	1896	AGR,AHF,AJM,ALH,ARL,ASZ,ATD AUY	A	-		09/98 ▸ 05/05	1J0959481	**820302**	90		95		22X1.5	29	
Corrado																			
1.8 i 16V,1.8 i G60	*5090*	E	1781	KR, PG	M			09/88 ▸ 07/93	191959481C	**819769**	84	91	95	102	22X1.5	29	
1.8 i G60	*5090*	E	1781	PG	M			07/93 ▸ 07/93	1H0959481B	**820035**	84	91	95	102	22X1.5	29	
1.8 i 16V,1.8 i G60	*5090*	E	1781	KR, PG	A			04/89 ▸ 07/92	191959481C	**819769**	84	91	95	102	22X1.5	29	
1.8 i G60	*5090*	E	1781	PG	A	+		08/89 ▸ 07/92	191919369A	**●820833**			120		20		
1.8 i G60	*5090*	E	1781	PG	M	+		09/88 ▸ 07/93	191919369A	**●820833**			120		20		
2.0 i,2.0 i 16V	*5090*	E	1984	9A, 2E	M			08/91 ▸ 07/93	191959481C	**819769**	84	91	95	102	22X1.5	29	
2.0 i,2.0 i 16V	*5090*	E	1984	9A, 2E, ADY	M			07/93 ▸ 07/95	1H0959481B	**820035**	84	91	95	102	22X1.5	29	
2.0 i,2.0 i 16V	*5090*	E	1984	9A, 2E	A			08/91 ▸ 07/93	191959481C	**819769**	84	91	95	102	22X1.5	29	
2.0 i,2.0 i 16V	*5090*	E	1984	9A, ADY, 2E	A			08/93 ▸ 07/95	1H0959481B	**820035**	84	91	95	102	22X1.5	29	
2.0 i,2.0 i 16V	*5090*	E	1984	2E,9A	A	+		08/91 ▸ 09/94	191919369A	**●820833**			120		20		
2.0 i,2.0 i 16V	*5090*	E	1984	2E,9A	M	+		08/91 ▸ 07/95	191919369A	**●820833**			120		20		
2.9 E VR6	*5090*	E	2861	ABV	M			08/91 ▸ 07/93	191959481C	**819769**	84	91	95	102	22X1.5	29	
2.9 E VR6	*5090*	E	2861	ABV	M			09/92 ▸ 07/95	1H0959481B	**820035**	84	91	95	102	22X1.5	29	
2.9 E VR6	*5090*	E	2861	ABV	A			08/91 ▸ 07/93	191959481C	**819769**	84	91	95	102	22X1.5	29	
2.9 E VR6	*5090*	E	2861	ABV	A			01/93 ▸ 07/95	1H0959481B	**820035**	84	91	95	102	22X1.5	29	
Derby (77>81)																			
0.9	*865/0/1/2, 866/0/1/2*	E	895	HA	M			01/77 ▸ 07/78	823959481F	**819759**	87		92		22X1.5	29	
0.9	*865/0/1/2, 866/0/1/2*	E	895	HA	M			07/78 ▸ 09/81	191959481B	**819743**	84		94		22X1.5	29	
1.1	*865/0/1/2, 866/0/1/2*	E	1093	HB, HD	M			01/77 ▸ 07/78	823959481F	**819759**	87		92		22X1.5	29	
1.1	*865/0/1/2, 866/0/1/2*	E	1093	HB, HD	M			07/78 ▸ 09/81	191959481B	**819743**	84		94		22X1.5	29	
1.3	*865/0/1/2, 866/1/2*	E	1272	HH, HJ	M			01/77 ▸ 07/78	823959481F	**819759**	87		92		22X1.5	29	
1.3	*865/0/1/2, 866/1/2*	E	1272	HJ, HH	M			07/78 ▸ 09/81	191959481B	**819743**	84		94		22X1.5	29	
Golf I (74>83)																			
1.1	*171/0/1/2, 172/0/1/2, 173/0/1/2 174/0/1/2*	E	1093	FJ, FA	M			04/74 ▸ 07/78	823959481F	**819759**	87		92		22X1.5	29	
1.1	*171/0/1/2, 172/0/1/2, 173/0/1/2 174/0/1/2*	E	1093	FA, FJ, GG	M			08/76 ▸ 12/83	191959481B	**819743**	84		94		22X1.5	29	
1.1	*171/0/1/2*	E	1093	GG	M			08/79 ▸ 07/83	191959481C	**819769**	84	91	95	102	22X1.5	29	
1.3	*171/0/1*	E	1272	GF	M			08/79 ▸ 07/83	191959481C	**819769**	84	91	95	102	22X1.5	29	
1.3	*171/0/1/2, 172/0/1/2, 173/0/1/2 174/0/1/2*	E	1272	GF, GS	M			08/79 ▸ 12/83	191959481B	**819743**	84		94		22X1.5	29	

• **New** Nouveau **Nuevo** Novo **Nuovo** Nieuw **Neu** Yeni Новый Nou

VOLKSWAGEN (.../...)

Golf I (74>83) (.../...)

1.5	171/0/1/2, 172/0/1/2, 173/0/1/2 174/0/1/2	E	1457	EH, JB, GH	M			08/77 ▸ 12/83	191959481B	**819743**	84		94		22X1.5	29
1.5	171/0/1, 172/0/1/2, 173/0/1/2, 174 0/1/2	E	1457	JB, EH	M			08/77 ▸ 07/78	823959481F	**819759**	87		92		22X1.5	29
1.5	171/0/1/2	E	1457	JB, GH	M			08/79 ▸ 07/83	191959481C	**819769**	84	91	95	102	22X1.5	29
1.5	172/0/1/2, 174/0/1/2	E	1457	EH	A			08/77 ▸ 07/78	823959481F	**819759**	87		92		22X1.5	29
1.5	171/0/1/2, 172/0/1/2, 173/0/1/2 174/0/1/2	E	1457	JB, GH, EH	A			08/78 ▸ 12/83	191959481B	**819743**	84		94		22X1.5	29
1.5	171/0/1	E	1457	JB	A			08/78 ▸ 07/83	191959481C	**819769**	84	91	95	102	22X1.5	29
1.5	171/0/1, 172/0/1, 173/0/1, 174/0/1	E	1471	FK, FH	M			02/74 ▸ 12/75	823959481F	**819759**	87		92		22X1.5	29
1.5	171/0/1, 172/0/1, 173/0/1, 174/0/1	E	1471	FH, FK	A			08/74 ▸ 12/75	823959481F	**819759**	87		92		22X1.5	29
1.6	171/0/1/2/3, 172/0/1/2, 173/0/1/2 174/0/1/2	E	1588	FP, FN, FV, FT, EG	M			08/75 ▸ 07/78	823959481F	**819759**	87		92		22X1.5	29
1.6	171/0/1/2/3, 172/0/1/2/3, 173/0/1/2 174/0/1/2	E	1588	FV, EJ, EM, FN, EG	M			01/76 ▸ 12/83	191959481B	**819743**	84		94		22X1.5	29
1.6	1711	E	1588	EM	M			08/79 ▸ 07/81	191959481C	**819769**	84	91	95	102	22X1.5	29
1.6	171/0/1/2, 172/0/1/2, 173/0/1/2 174/0/1/2	E	1588	FT, FP, FV, FN	A			08/75 ▸ 07/78	823959481F	**819759**	87		92		22X1.5	29
1.6	171/0/1/2, 172/0/1/2, 173/0/1/2 174/0/1/2	E	1588	FV, EJ, EM	A			01/76 ▸ 12/83	191959481B	**819743**	84		94		22X1.5	29
1.7 i	172/0/1/2, 174/0/1/2	E	1716	EN	M			08/80 ▸ 07/83	191959481B	**819743**	84		94		22X1.5	29
1.7 i	172/0/1/2, 174/0/1/2	E	1716	EN	A			08/80 ▸ 12/83	191959481B	**819743**	84		94		22X1.5	29
1.8	1723, 1733, 171/3	E	1781	DX, JJ	M			08/82 ▸ 12/83	191959481B	**819743**	84		94		22X1.5	29
1.8	1713, 1733	E	1781	JJ	M			08/82 ▸ 12/83	191959481C	**819769**	84	91	95	102	22X1.5	29
1.5 D	171/0/1/2, 172/0/1/2, 173/0/1/2 174/0/1/2	D	1471	CK	M			08/76 ▸ 07/78	823959481F	**819759**	87		92		22X1.5	29
1.5 D	1710	D	1471	CK	M			08/78 ▸ 07/80	191959481B	**819743**	84		94		22X1.5	29
1.5 D	171/0/1/2, 172/0/1/2, 173/0/1/2 174/0/1/2	D	1471	CK	A			08/77 ▸ 07/78	823959481F	**819759**	87		92		22X1.5	29
1.6 D,1.6 TD	171/0/1/2/T, 172/0/1/2 173/0/1/2/T, 174/0/1/2/A	D	1588	CR, JK, CY	M			08/80 ▸ 12/84	191959481B	**819743**	84		94		22X1.5	29
1.6 D,1.6 TD	171/0/1/2, 172/0/1/2, 173 0/1/2, 174/0/1/2/A	D	1588	JK, CR, CY	M			08/80 ▸ 12/84	191959481C	**819769**	84	91	95	102	22X1.5	29
1.6 D	171/0/1/2, 172/0/1/2, 173/0/1/2 174/0/1/2/A	D	1588	JK, CR	A			08/81 ▸ 12/83	191959481C	**819769**	84	91	95	102	22X1.5	29
1.6 D	171/0/1/2, 172/0/1/2, 173/0/1/2 174/0/1/2/A	D	1588	CR, JK	A			08/81 ▸ 12/83	191959481B	**819743**	84		94		22X1.5	29

Golf I Cabriolet (79>93)

1.1	1542, 1552	E	1093	GG, FA	M			01/79 ▸ 07/83	191959481B	**819743**	84		94		22X1.5	29
1.3 i	1552	E	1272	HK	M	+		08/83 ▸ 07/86	191959481C	**819769**	84	91	95	102	22X1.5	29
1.3 i	1552	E	1272	HK	M			08/83 ▸ 07/86	191959481B	**819743**	84		94		22X1.5	29
1.5	1542, 1552	E	1457	EH, GH, JB	M			01/79 ▸ 08/83	191959481B	**819743**	84		94		22X1.5	29
1.5	1542, 1552	E	1457	EH, JB, GH	A			01/79 ▸ 08/83	191959481B	**819743**	84		94		22X1.5	29
1.6,1.6 i	1542, 1552	E	1588	EG, EM, FV, EJ, FN	M			01/79 ▸ 07/83	191959481B	**819743**	84		94		22X1.5	29
1.6,1.6 i	1542, 1552	E	1588	EM, FV, EJ, FN	A			01/79 ▸ 07/83	191959481B	**819743**	84		94		22X1.5	29
1.6	154/2/4, 155/2/4	E	1595	EW, HN	M	+		08/83 ▸	191959481C	**819769**	84	91	95	102	22X1.5	29
1.6	154/2/4, 155/2/4	E	1595	EW, HN	M			08/83 ▸	191959481B	**819743**	84		94		22X1.5	29
1.6	155/2/4	E	1595	EW, HN	A	+		08/83 ▸	191959481C	**819769**	84	91	95	102	22X1.5	29
1.6	154/2/4, 155/2/4	E	1595	EW, HN	A			08/83 ▸	191959481B	**819743**	84		94		22X1.5	29
1.7 i	1552	E	1716	EN	M			08/80 ▸ 07/81	191959481B	**819743**	84		94		22X1.5	29
1.7 i	1552	E	1716	EN	A			08/80 ▸ 07/81	191959481B	**819743**	84		94		22X1.5	29
1.8,1.8 i	154/2/4/A, 155/2/4/A/J/K	E	1781	DX, KT, EX, 2H, JH, JJ	M	+/-		08/82 ▸ 07/93	191959481C	**819769**	84	91	95	102	22X1.5	29
1.8,1.8 i	154/2/4/A, 155/2/4/A/J/K	E	1781	DX, EX, JH, 2H, KT, JJ	M			08/82 ▸ 07/93	191959481B	**819743**	84		94		22X1.5	29
1.8,1.8 i	154/2/4, 155/2/4/J/K	E	1781	2H, JH, EX	A	+/-		08/83 ▸ 07/93	191959481C	**819769**	84	91	95	102	22X1.5	29
1.8,1.8 i	154/2/4, 155/2/4/J/K	E	1781	EX, JH, 2H	A			08/83 ▸ 07/93	191959481B	**819743**	84		94		22X1.5	29

Golf II (83>91)

1.05	1920, 191/0/1/2, 1940, 193/0/1/2 1G1/1/2/3	E	1043	GN, HZ	M			08/83 ▸ 10/91	191959481C	**819769**	84	91	95	102	22X1.5	29
1.05	1920, 191/0/1/2, 1940, 193/0/1/2 1G1/1/2/3	E	1043	HZ, GN	M			08/83 ▸ 10/91	191959481B	**819743**	84		94		22X1.5	29
1.3	1920, 191/0/1/2/H/J, 193/0/1/2/G/H J, 194/0/1, 1G1/0/1/2/3	E	1272	NU, MH, HK, NZ, 2G, GT	M	+/-		08/83 ▸ 07/92	191959481C	**819769**	84	91	95	102	22X1.5	29

• **New** Nouveau **Nuevo** Novo **Nuovo** Nieuw **Neu** Yeni Новый Nou

VOLKSWAGEN (.../...)

Golf II (83>91) (.../...)

1.3	*1920, 191/0/1/2/H/J, 193/0/1/2/G/H J, 194/0/1, 1G1/0/1/2/3*	E	1272	NU, NZ, MH, GT, 2G, HK	M			08/83 ▸ 07/92	191959481B	**819743**	84		94		22X1.5	29
1.6	*1920, 191/0/1/2/H/J, 193/0/1/2/G/H J, 194/1/2, 1G1/1/2/3*	E	1595	PN, ABX, RF, EZA, ABN, EZ, HM	M	+/-		08/83 ▸ 07/92	191959481C	**819769**	84	91	95	102	22X1.5	29
1.6	*1920, 191/0/1/2/H/J, 193/0/1/2/G/H J, 194/1/2, 1G1/1/2/3*	E	1595	PN, RF, EZA, EZ, HM, ABN, ABX	M			08/83 ▸ 07/92	191959481B	**819743**	84		94		22X1.5	29
1.6	*1920, 191/0/1/2, 193/0/1/2, 194/0/1 2, 1G1/1/2/3*	E	1595	EZA, PN, HM, RF, EZ	A	+/-		08/83 ▸ 10/91	191959481C	**819769**	84	91	95	102	22X1.5	29
1.6	*1920, 191/0/1/2, 193/0/1/2, 194/0/1 2, 1G1/1/2/3*	E	1595	HM, RF, EZ, PN, EZA	A			08/83 ▸ 10/91	191959481B	**819743**	84		94		22X1.5	29
1.8 G60	*1G17, 1G47*	E	1763	1H	M	+		08/88 ▸ 12/89	191959481C	**819769**	84	91	95	102	22X1.5	29
1.8 G60	*1G17, 1G47*	E	1763	1H	M			08/88 ▸ 12/89	191959481B	**819743**	84		94		22X1.5	29
1.8,1.8 G60,1.8 i 1.8 i 16V	*168Z, 167/5, 191/0/1/2/3 G/H/J/N/S/T/U/V/W/Z, 192 0/1/2/3/T/U/V/Z, 193/0/1 2/3/7/G/H/J/K/N/P/S/T/U/V W/Z, 194/0/1/2/3/7/T/V/Z 1G47, 1G1/1/2/3/5/7/J*	E	1781	GX, RH, RP, GU, HV, PF, PB RV, RD, PL, HT, PG, 1P, EV KR, GZ	M	+/-		01/84 ▸ 07/97	191959481C	**819769**	84	91	95	102	22X1.5	29
1.8,1.8 G60,1.8 i 1.8 i 16V	*168Z, 167/5, 191/0/1/2/3 G/H/J/N/S/T/U/V/W/Z, 192 0/1/2/3/T/U/V/Z, 193/0/1 2/3/7/G/H/J/K/N/P/S/T/U/V W/Z, 194/0/1/2/3/7/T/V/Z 1G47, 1G1/1/2/3/5/7/J*	E	1781	GX, RV, RP, 1P, KR, GU, PF RH, EV, PL, PG, PB, HV, RD HT, GZ	M			01/84 ▸ 07/97	191959481B	**819743**	84		94		22X1.5	29
1.8,1.8 i	*191/0/1/2/G/H/J, 192/0/1 2, 193/0/1/2/7/G/H/J/K/T 194/0/1/2/7/G, 1G1/1/2/3 5*	E	1781	GU, RP, RV, GX, HV, RH	A	+/-		08/83 ▸ 10/91	191959481C	**819769**	84	91	95	102	22X1.5	29
1.8,1.8 i	*191/0/1/2/G/H/J, 192/0/1 2, 193/0/1/2/7/G/H/J/K/T 194/0/1/2/7/G, 1G1/1/2/3 5*	E	1781	GX, RH, GU, RP, HV, RV	A			08/83 ▸ 10/91	191959481B	**819743**	84		94		22X1.5	29
1.6 D,1.6 TD	*191/0/1/2/T/V, 192/0/1/2 193/0/1/2/7/T, 194/0/1/2 1G1/1/2/3/5*	D	1588	JR, SB, JP, MF, ME, 1V, RA	M	+/-		08/83 ▸ 07/92	191959481C	**819769**	84	91	95	102	22X1.5	29
1.6 D,1.6 TD	*191/0/1/2/T/V, 192/0/1/2 193/0/1/2/7/T, 194/0/1/2 1G1/1/2/3/5*	D	1588	JP, 1V, RA, JR, MF, ME, SB	M			08/83 ▸ 07/92	191959481B	**819743**	84		94		22X1.5	29
1.6 D	*1920, 191/0/1/2, 193/0/1/2, 194/0/2 1G1/1/2/3*	D	1588	JP	A	+/-		08/83 ▸ 10/91	191959481C	**819769**	84	91	95	102	22X1.5	29
1.6 D	*1920, 191/0/1/2, 193/0/1/2, 194/0/2 1G1/1/2/3*	D	1588	JP	A			08/83 ▸ 10/91	191959481B	**819743**	84		94		22X1.5	29

Golf II Cabriolet (93>98)

1.6 i	*1E7/3/5/E*	E	1598	AFT, AKS, AEK	M			07/94 ▸ 12/97	1H0959481B	**820035**	84	91	95	102	22X1.5	29
1.6 i	*1E7/3/5/E*	E	1598	AFT, AEK, AKS	M			07/94 ▸ 12/97	867959481	**820034**	84		95		22X1.5	29
1.6 i	*1E7/3/5/E*	E	1598	AFT, AEK, AKS	M			07/94 ▸ 02/98	191959481C	**819769**	84	91	95	102	22X1.5	29
1.6 i	*1E7/3/5/E*	E	1598	AEK, AFT, AKS	M			07/94 ▸ 02/98	191959481B	**819743**	84		94		22X1.5	29
1.6 i	*1E7/3/5/E*	E	1598	AEK, AFT	A			07/94 ▸ 02/98	191959481C	**819769**	84	91	95	102	22X1.5	29
1.6 i	*1E7/3/5/E*	E	1598	AFT, AEK	A			07/94 ▸ 12/97	867959481	**820034**	84		95		22X1.5	29
1.6 i	*1E7/3/5/E*	E	1598	AFT, AEK	A			07/94 ▸ 02/98	191959481B	**819743**	84		94		22X1.5	29
1.6 i	*1E7/3/5/E*	E	1598	AEK, AFT	A			07/94 ▸ 12/97	1H0959481B	**820035**	84	91	95	102	22X1.5	29
1.8 i	*1E7/3/5*	E	1781	ANN, ANP, ABS, ADZ, AAM	M	+/-		09/93 ▸ 02/98	191959481C	**819769**	84	91	95	102	22X1.5	29
1.8 i	*1E7/3/5*	E	1781	ABS, ADZ, AAM	M			09/93 ▸ 12/97	867959481	**820034**	84		95		22X1.5	29
1.8 i	*1E7/3/5*	E	1781	ABS, AAM, ADZ	M			09/93 ▸ 12/97	1H0959481B	**820035**	84	91	95	102	22X1.5	29
1.8 i	*1E7/3/5*	E	1781	ADZ, AAM, ABS, ANN, ANP	M			09/93 ▸ 02/98	191959481B	**819743**	84		94		22X1.5	29
1.8 i	*1E7/3/5*	E	1781	ANP, ABS, ADZ	A	+/-		09/93 ▸ 02/98	191959481C	**819769**	84	91	95	102	22X1.5	29
1.8 i	*1E7/3/5*	E	1781	ANP, ADZ, ABS	A			09/93 ▸ 02/98	191959481B	**819743**	84		94		22X1.5	29
1.8 i	*1E7/3/5*	E	1781	ABS, ADZ	A			09/93 ▸ 12/97	867959481	**820034**	84		95		22X1.5	29
1.8 i	*1E7/3/5*	E	1781	ABS, ADZ	A			09/93 ▸ 12/97	1H0959481B	**820035**	84	91	95	102	22X1.5	29
2.0 i	*1E7/3/5*	E	1984	ADY, AGG, 2E, AKR	M			09/93 ▸ 02/98	191959481B	**819743**	84		94		22X1.5	29
2.0 i	*1E7/3/5*	E	1984	ADY, AGG, AKR, 2E	M			09/93 ▸ 12/97	1H0959481B	**820035**	84	91	95	102	22X1.5	29
2.0 i	*1E7/3/5*	E	1984	AGG, ADY, AKR, 2E	M			09/93 ▸ 02/98	191959481C	**819769**	84	91	95	102	22X1.5	29
2.0 i	*1E7/3/5*	E	1984	AGG, ADY, AKR, 2E	M			09/93 ▸ 12/97	867959481	**820034**	84		95		22X1.5	29

• **New** Nouveau **Nuevo** Novo **Nuovo** Nieuw **Neu** Yeni Новый Nou

VOLKSWAGEN (.../...)

Golf II Cabriolet (93>98) (.../...)

2.0 i	*1E7/3/5*	E	1984	ADY, AGG, 2E	A			09/93 ▸ 02/98	191959481B	**819743**	84		94		22X1.5	29
2.0 i	*1E7/3/5*	E	1984	ADY, AGG, 2E	A			09/93 ▸ 12/97	867959481	**820034**	84		95		22X1.5	29
2.0 i	*1E7/3/5*	E	1984	AGG, ADY, 2E	A			09/93 ▸ 12/97	1H0959481B	**820035**	84	91	95	102	22X1.5	29
2.0 i	*1E7/3/5*	E	1984	AGG, ADY, 2E	A			09/93 ▸ 02/98	191959481C	**819769**	84	91	95	102	22X1.5	29
1.9 TDi	*1E7/3/5*	D	1896	ALE, AHU, 1Z, AFN	M			08/95 ▸ 02/98	191959481C	**819769**	84	91	95	102	22X1.5	29
1.9 TDi	*1E7/3/5*	D	1896	AHU, ALE, 1Z, AFN	M			08/95 ▸ 12/97	1H0959481B	**820035**	84	91	95	102	22X1.5	29
1.9 TDi	*1E7/3/5*	D	1896	1Z, AFN, AHU, ALE	M			08/95 ▸ 02/98	191959481B	**819743**	84		94		22X1.5	29
1.9 TDi	*1E7/3/5*	D	1896	ALE, AHU, AFN, 1Z	M			08/95 ▸ 12/97	867959481	**820034**	84		95		22X1.5	29
1.9 TDi	*1E7/3/5*	D	1896	AHU, 1Z	A			08/95 ▸ 12/97	191959481C	**819769**	84	91	95	102	22X1.5	29
1.9 TDi	*1E7/3/5*	D	1896	AHU, 1Z	A			08/95 ▸ 12/97	191959481B	**819743**	84		94		22X1.5	29
1.9 TDi	*1E7/3/5*	D	1896	1Z, AHU	A			08/95 ▸ 12/97	1H0959481B	**820035**	84	91	95	102	22X1.5	29
1.9 TDi	*1E7/3/5*	D	1896	1Z, AHU	A			08/95 ▸ 12/97	867959481	**820034**	84		95		22X1.5	29

Golf III (91>97)

1.4,1.4 i	*1H1/0/2/3/B, 1H5/0/2/B*	E	1390	APQ, AEX	M	+/-		08/95 ▸ 05/98	867959481	**820034**	84		95		22X1.5	29
1.4,1.4 i	*1H1/0/2/3/B, 1H5/0/2/B*	E	1390	APQ, AEX	M	+/-		08/95 ▸ 05/98	1H0959481B	**820035**	84	91	95	102	22X1.5	29
1.4,1.4 i 1H-R-000 001 ▸	*1H52, 1H1/2/3*	E	1391	ABD	M	+/-		08/93 ▸ 06/95	867959481	**820034**	84		95		22X1.5	29
1.4,1.4 i	*1H52, 1H1/2/3*	E	1391	ABD	M	+/-		08/93 ▸ 06/95	1H0959481B	**820035**	84	91	95	102	22X1.5	29
1.4 ▸ 1H-P-990 000	*1H1/2/3*	E	1391	ABD	M	+		11/91 ▸ 07/93	191959481C	**819769**	84	91	95	102	22X1.5	29
1.4 ▸ 1H-P-990 000	*1H1/2/3*	E	1391	ABD	M	-		11/91 ▸ 07/93	191959481B	**819743**	84		94		22X1.5	29
1.6,1.6 i	*1H1/0/2/3/5/B/E, 1H5/0/2 3/5/B*	E	1598	AKS, AEK, AFT, ABU, AEE, AEA	M	+/-		11/91 ▸ 02/99	867959481	**820034**	84		95		22X1.5	29
1.6,1.6 i	*1H1/0/2/3/5/B/E, 1H5/0/2 3/5/B*	E	1598	AEA, AFT, AEK, AKS, ABU, AEE	M	+/-		09/92 ▸ 02/99	1H0959481B	**820035**	84	91	95	102	22X1.5	29
1.6 i	*1H1/0/2/3/B, 1H5/0/2/3/B*	E	1598	AEK, AFT	A	+/-		10/94 ▸ 02/99	1H0959481B	**820035**	84	91	95	102	22X1.5	29
1.6 i	*1H1/0/2/3/B, 1H5/0/2/3/B*	E	1598	AFT, AEK	A	+/-		10/94 ▸ 02/99	867959481	**820034**	84		95		22X1.5	29
1.6 ▸ 1H-P-990 000	*1H1/2/3*	E	1598	ABU, AEK	M	+		11/91 ▸ 07/93	191959481C	**819769**	84	91	95	102	22X1.5	29
1.6 ▸ 1H-P-990 000	*1H1/2/3*	E	1598	ABU, AEK	M	-		11/91 ▸ 07/93	191959481B	**819743**	84		94		22X1.5	29
1.8,1.8 i	*1H1/2/3/5*	E	1781	ABS, AAM	M	+/-		11/91 ▸ 07/93	191959481B	**819743**	84		94		22X1.5	29
1.8,1.8 i 1H-R-000 001 ▸	*1H1/0/2/3/5, 1H5/0/2/3/5*	E	1781	ABS, AAM, ADZ, ACC, ANN, ANP	M	+/-		07/92 ▸ 04/99	867959481	**820034**	84		95		22X1.5	29
1.8,1.8 i 1H-R-000 001 ▸	*1H1/0/2/3/5, 1H5/0/2/3/5*	E	1781	AAM, ABS, ADZ, ACC, ANP, ANN	M	- +		07/92 ▸ 04/99	1H0959481B	**820035**	84	91	95	102	22X1.5	29
1.8,1.8 i 1H-R-000 001 ▸	*1H1/0/2/3, 1H5/0/2/3*	E	1781	ABS, ADZ, AAM, ANP, ANN	A	+/-		07/92 ▸ 02/99	1H0959481B	**820035**	84	91	95	102	22X1.5	29
1.8,1.8 i 1H-R-000 001 ▸	*1H1/0/2/3, 1H5/0/2/3*	E	1781	AAM, ABS, ANN, ADZ, ANP	A	+/-		08/93 ▸ 02/99	867959481	**820034**	84		95		22X1.5	29
1.8,1.8 i ▸ 1H-P-990 000	*1H1/2/3/5*	E	1781	AAM, ABS	M	+/-		11/91 ▸ 07/93	191959481C	**819769**	84	91	95	102	22X1.5	29
1.8 ▸ 1H-P-990 000	*1H1/2/3*	E	1781	AAM, ABS	A	+/-		11/91 ▸ 07/93	191959481C	**819769**	84	91	95	102	22X1.5	29
1.8 ▸ 1H-P-990 000	*1H1/2/3*	E	1781	AAM, ABS	A	-		11/91 ▸ 07/93	191959481B	**819743**	84		94		22X1.5	29
1.8	*1H1/3/5*	E	1781	AAM,ABS	M	+		11/91 ▸ 06/92	1H0959481C	**820225**	79	85	90	97	22X1.5	29
1.8	*1H13*	E	1781	AAM,ABS	A	+		11/91 ▸ 06/92	1H0959481C	**820225**	79	85	90	97	22X1.5	29
2.0 16V,2.0 E,2.0 i	*1H33, 1H1/0/2/3/5/6, 1H5 0/2/3/5*	E	1984	ADY, AGG, 2E, AKR, AEP, ABF	M	+/-		07/92 ▸ 04/99	867959481	**820034**	84		95		22X1.5	29
2.0 16V,2.0 E,2.0 i 1H-R-000 001 ▸	*1H33, 1H1/0/2/3/5/6, 1H5 0/2/3/5*	E	1984	ADY, AKR, ABF, AGG, 2E, AEP	M	+/-		07/92 ▸ 04/99	1H0959481B	**820035**	84	91	95	102	22X1.5	29
2.0 E,2.0 i	*1H1/0/2/3, 1H5/0/2/3*	E	1984	2E, AGG, ADY, AEP	A	+/-		08/93 ▸ 02/99	867959481	**820034**	84		95		22X1.5	29
2.0 E,2.0 i 1H-R-000 001 ▸	*1H1/0/2/3, 1H5/0/2/3*	E	1984	2E, AGG, ADY, AEP	A	+/-		08/93 ▸ 02/99	1H0959481B	**820035**	84	91	95	102	22X1.5	29
2.0 16V,2.0 E ▸ 1H-P-990 000	*1H1/2/3/5/6*	E	1984	ABF, 2E	M	+/-		11/91 ▸ 07/93	191959481B	**819743**	84		94		22X1.5	29
2.0 16V,2.0 E ▸ 1H-P-990 000	*1H1/2/3/5/6*	E	1984	2E, ABF	M	+		11/91 ▸ 07/93	191959481C	**819769**	84	91	95	102	22X1.5	29
2.0 E ▸ 1H-P-990 000	*1H1/2/3*	E	1984	2E	A	+		11/91 ▸ 07/93	191959481C	**819769**	84	91	95	102	22X1.5	29
2.0 E ▸ 1H-P-990 000	*1H1/2/3*	E	1984	2E	A	-		11/91 ▸ 07/93	191959481B	**819743**	84		94		22X1.5	29

• **New** Nouveau **Nuevo** Novo **Nuovo** Nieuw **Neu** Yeni Новый Nou

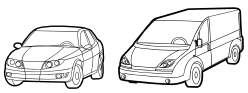

Type Ctr.	cc		AC		2 3	OE	Valeo	(°)C T1	T2	T3	T4	COD.	mm

VOLKSWAGEN (.../...)

Golf III (91>97) (.../...)

2.0 16V	1H16	E	1984	ABF	M			03/92 ▸ 12/97	1H0959481C	**820225**	79	85	90	97	22X1.5	29
2.8 VR6	1H16	E	2792	AAA	M	+		08/93 ▸ 12/97	1H0959481B	**820035**	84	91	95	102	22X1.5	29
1H-R-000 001 ▸																	
2.8 VR6	1H16	E	2792	AAA	M	-		08/93 ▸ 12/97	867959481	**820034**	84		95		22X1.5	29
1H-R-000 001 ▸																	
2.8 VR6	1H16	E	2792	AAA	A	+		08/93 ▸ 12/97	1H0959481B	**820035**	84	91	95	102	22X1.5	29
1H-R-000 001 ▸																	
2.8 VR6	1H16	E	2792	AAA	A	-		08/93 ▸ 12/97	867959481	**820034**	84		95		22X1.5	29
1H-R-000 001 ▸																	
2.8 VR6	1H16	E	2792	AAA	M	+		01/92 ▸ 07/93	191959481C	**819769**	84	91	95	102	22X1.5	29
▸ 1H-P-990 000																	
2.8 VR6	1H16	E	2792	AAA	M	-		01/92 ▸ 07/93	191959481B	**819743**	84		94		22X1.5	29
▸ 1H-P-990 000																	
2.8 VR6	1H16	E	2792	AAA	A	+		07/92 ▸ 07/93	191959481C	**819769**	84	91	95	102	22X1.5	29
▸ 1H-P-990 000																	
2.8 VR6	1H16	E	2792	AAA	A	-		07/92 ▸ 07/93	191959481B	**819743**	84		94		22X1.5	29
▸ 1H-P-990 000																	
2.9 i VR6	1H56, 1H1/3/6	E	2861	ABV	M			01/94 ▸ 04/99	1H0959481B	**820035**	84	91	95	102	22X1.5	29
2.9 i VR6	1H56, 1H1/3/6	E	2861	ABV	M			01/94 ▸ 04/99	867959481	**820034**	84		95		22X1.5	29
1.9 D,1.9 D Ecomatic	1H0/0, 1H1/0/2/3/5, 1H5/0	D	1896	AAZ, 1Y, AFN, AEY, 1Z, ALE	M	+/-		06/92 ▸ 04/99	1H0959481B	**820035**	84	91	95	102	22X1.5	29
1.9 SDi,1.9 SDi Ecomatic	2/3/5			AHU													
1.9 TD,1.9 TDi																	
1H-R-000 001 ▸																	
1.9 D,1.9 D Ecomatic	1H0/0, 1H1/0/2/3/5, 1H5/0	D	1896	AEY, 1Z, AHU, AFN, 1Y, AAZ	M	+/-		06/93 ▸ 04/99	867959481	**820034**	84		95		22X1.5	29
1.9 SDi,1.9 SDi Ecomatic	2/3/5			ALE													
1.9 TD,1.9 TDi																	
1.9 TD,1.9 TDi	1H1/0/2/3, 1H5/0/2/3/B	D	1896	1Z, AHU, AFN, AAZ	A	+/-		07/92 ▸ 02/99	1H0959481B	**820035**	84	91	95	102	22X1.5	29
1.9 TDi	1H1/0/2/3, 1H5/0/2/3/B	D	1896	AFN, 1Z, AHU	A	+/-		07/93 ▸ 02/99	867959481	**820034**	84		95		22X1.5	29
1.9 TD	1H1/2/3	D	1896	AAZ	A	+		11/91 ▸ 06/93	191959481C	**819769**	84	91	95	102	22X1.5	29
1.9 D,1.9 D Ecomatic	1H1/2/3/5	D	1896	AAZ, 1Y	M	+/-		11/91 ▸ 07/93	191959481B	**819743**	84		94		22X1.5	29
1.9 TD																	
▸ 1H-P-990 000																	
1.9 D,1.9 D Ecomatic	1H1/2/3/5	D	1896	AAZ, 1Y	M	+/-		11/91 ▸ 07/93	191959481C	**819769**	84	91	95	102	22X1.5	29
1.9 TD																	
▸ 1H-P-990 000																	
1.9 TD	1H1/2/3	D	1896	AAZ	A	-		11/91 ▸ 06/93	191959481B	**819743**	84		94		22X1.5	29
▸ 1H-P-990 000																	

Golf III Cabriolet (98>2002)

1.6 i	1E7/1/2/3/4/6/F	E	1598	AFT, AKS	M			03/98 ▸	1H0959481B	**820035**	84	91	95	102	22X1.5	29
1.6 i	1E7/1/2/3/4/6/F	E	1598	AFT, AKS	M			03/98 ▸	867959481	**820034**	84		95		22X1.5	29
1.6 i	1E7/1/2/3/4/6/F	E	1598	AFT	A			03/98 ▸	867959481	**820034**	84		95		22X1.5	29
1.6 i	1E7/1/2/3/4/6/F	E	1598	AFT	A			03/98 ▸	1H0959481B	**820035**	84	91	95	102	22X1.5	29
1.8 i	1E7/1/2/3/4/6	E	1781	ANN, ANP, AAM, ADZ	M			03/98 ▸	867959481	**820034**	84		95		22X1.5	29
1.8 i	1E7/1/2/3/4/6	E	1781	ANN, ANP, AAM, ADZ	M			03/98 ▸	1H0959481B	**820035**	84	91	95	102	22X1.5	29
1.8 i	1E7/1/2/3/4/6	E	1781	ADZ, ANP	A			03/98 ▸	867959481	**820034**	84		95		22X1.5	29
1.8 i	1E7/1/2/3/4/6	E	1781	ADZ, ANP	A			03/98 ▸	1H0959481B	**820035**	84	91	95	102	22X1.5	29
2.0 i	1V73, 1E7/1/2/3/4/6	E	1984	AWG, ATU, AGG, AKR	M			03/98 ▸	1H0959481B	**820035**	84	91	95	102	22X1.5	29
2.0 i	1V73, 1E7/1/2/3/4/6	E	1984	AWG, AGG, AKR, ATU	M			03/98 ▸	867959481	**820034**	84		95		22X1.5	29
2.0 i	1V73, 1E7/1/2/3/4/6	E	1984	AWF, AGG, ATU, AWG	A			03/98 ▸	1H0959481B	**820035**	84	91	95	102	22X1.5	29
2.0 i	1V73, 1E7/1/2/3/4/6	E	1984	AGG, AWF, ATU, AWG	A			03/98 ▸	867959481	**820034**	84		95		22X1.5	29
1.9 TDi	1E7/1/2/3/4/6	D	1896	ALE, AVG, AFN, AHU	M			03/98 ▸	867959481	**820034**	84		95		22X1.5	29
1.9 TDi	1E7/1/2/3/4/6	D	1896	ALE, AVG, AHU, AFN	M			03/98 ▸	1H0959481B	**820035**	84	91	95	102	22X1.5	29

Golf IV (97>2003)

1.4 i 16V	1J1/0/1/2, 1J5/0/1/2/3	E	1390	AHW, AXP, AKQ, BCA, APE	M	+/-		10/97 ▸	867959481	**820034**	84		95		22X1.5	29
1.4 i 16V	1J12	E	1390	AHW	A	+/-		10/97 ▸	867959481	**820034**	84		95		22X1.5	29
1.4 i 16V	1J12, 1J52	E	1390	AHW,AKQ,AXP	M	+		10/97 ▸ 06/06	1J0959481A	**•820831**	85		90		22X1.5	29
1.4 i 16V	1J1/0/1/2, 1J5/0/1/2/3	E	1390	AHW,AKQ,APE,AXP,BCA	M			10/97 ▸ 06/06	1J0959481A	**•820831**	85		90		22X1.5	29
1.4 i 16V	1J12	E	1390	AHW	A	+		10/97 ▸ 05/00	1J0959481A	**•820831**	85		90		22X1.5	29
1.4 i 16V	1J12	E	1390	AHW	A			10/97 ▸ 05/00	1J0959481A	**•820831**	85		90		22X1.5	29
1.4 i 16V	1J12, 1J52	E	1390	AHW,AKQ,AXP	M	-		10/97 ▸ 06/06	1J0959481	**820302**	90		95		22X1.5	29
1.4 i 16V	1J1/0/1/2, 1J5/0/1/2/3	E	1390	AHW,AKQ,APE,AXP,BCA	M			10/97 ▸ 06/06	1J0959481	**820302**	90		95		22X1.5	29
1.4 i 16V	1J12	E	1390	AHW	A	-		10/97 ▸ 05/00	1J0959481	**820302**	90		95		22X1.5	29

• **New** Nouveau **Nuevo** Novo **Nuovo** Nieuw **Neu** Yeni Новый Nou

VOLKSWAGEN (.../...)

Golf IV (97>2003) (.../...)

		Type Ctr.		CC			AC			OE	Valeo	(°)C T1	T2	T3	T4	COD.	mm	
1.4 i 16V	1J12	E		1390	AHW		A		10/97 ▸ 05/00	1J0959481	**820302**	90		95		22X1.5	29	
1.6 FSI 16V,1.6 i 1.6 i 16V	1J1/0/1/2/3/5, 1J5/0/1/2 3/5	E		1595	AKL, AEH, APF, ATN, BAD, BFQ BCB, AZD, AUS, AVU		M	+/-	10/97 ▸	867959481	**820034**	84		95		22X1.5	29	
1.6 i	1J1/0/1/2/3/5, 1J5/0/1/2/3/5	E		1595	BFQ, APF, AVU, AEH, AKL		A	+/-	10/97 ▸	867959481	**820034**	84		95		22X1.5	29	
1.6 i,1.6 i 16V	1J1/2/5, 1J5/2/5	E		1595	AEH,AKL,APF,ATN		M	+	10/97 ▸ 06/02	1J0959481A	●**820831**	85		90		22X1.5	29	
1.6 FSI 16V,1.6 i 1.6 i 16V	1J1/0/1/2/3/5, 1J5/0/1/2 3/5	E		1595	AEH,AKL,APF,ATN,AUS,AVU,AZD BAD,BCB,BFQ		M		10/97 ▸ 06/06	1J0959481A	●**820831**	85		90		22X1.5	29	
1.6 i	1J1/2/5, 1J5/2/5	E		1595	AEH,AKL		A	+	10/97 ▸ 05/00	1J0959481A	●**820831**	85		90		22X1.5	29	
1.6 i,1.6 i 16V	1J1/2/5, 1J5/2/5	E		1595	AEH,AKL,APF,ATN		M	-	10/97 ▸ 06/02	1J0959481	**820302**	90		95		22X1.5	29	
1.6 FSI 16V,1.6 i 1.6 i 16V	1J1/0/1/2/3/5, 1J5/0/1/2 3	E		1595	AEH,AKL,APF,ATN,AUS,AVU,AZD BAD,BCB,BFQ		M		10/97 ▸ 06/06	1J0959481	**820302**	90		95		22X1.5	29	
1.6 i	1J1/2/5, 1J5/2/5	E		1595	AEH,AKL		A	-	10/97 ▸ 05/00	1J0959481	**820302**	90		95		22X1.5	29	
1.6 i	1J1/0/1/2/3/5, 1J5/0/1/2/3/5	E		1595	AEH,AKL,APF,AVU,BFQ		A		10/97 ▸ 06/06	1J0959481	**820302**	90		95		22X1.5	29	
1.8 i,1.8 i 20V 1.8 i Turbo 1.8 i Turbo 20V	1J1/0/1/2/3/5/6, 1J5/0/1 2/3/5	E		1781	AGN, AGU, AUQ, ARZ, AUM		M	+/-	10/97 ▸	867959481	**820034**	84		95		22X1.5	29	
1.8 i 20V,1.8 i Turbo 20V	1J1/2/3/5/6, 1J5/2/3	E		1781	AGU, AGN, AUM		A	+/-	10/97 ▸	867959481	**820034**	84		95		22X1.5	29	
1.8 i 20V,1.8 i Turbo 20V	1J1/2/5/6, 1J5/2/5	E		1781	AGN,AGU		M	+	10/97 ▸ 09/00	1J0959481A	●**820831**	85		90		22X1.5	29	
1.8 i 20V,1.8 i Turbo 20V	1J1/2/5/6	E		1781	AGN,AGU		A	+	10/97 ▸ 05/00	1J0959481A	●**820831**	85		90		22X1.5	29	
1.8 i 20V,1.8 i Turbo 20V	1J1/2/5/6, 1J5/2/5	E		1781	AGN,AGU		M	-	10/97 ▸ 09/00	1J0959481	**820302**	90		95		22X1.5	29	
1.8 i,1.8 i 20V 1.8 i Turbo 1.8 i Turbo 20V	1J1/0/1/2/3/5/6, 1J5/0/1 2/3	E		1781	AGN,AGU,ARZ,AUM,AUQ		M		10/97 ▸ 05/06	1J0959481	**820302**	90		95		22X1.5	29	
1.8 i 20V,1.8 i Turbo 20V	1J1/2/5/6	E		1781	AGN,AGU		A	-	10/97 ▸ 05/00	1J0959481	**820302**	90		95		22X1.5	29	
1.8 i 20V,1.8 i Turbo 20V	1J1/2/3/5/6, 1J5/2/3	E		1781	AGN,AGU,AUM		A		10/97 ▸ 05/06	1J0959481	**820302**	90		95		22X1.5	29	
2.0 i	1J1/0/1/2/3, 1J5/0/1/2/3	F		1984	BEH		M		05/02 ▸	867959481	**820034**	84		95		22X1.5	29	
2.0 i	1J1/0/1/2/3/5/6, 1J5/0/1/2/3/5	E		1984	APK, AQY, AZJ, AZH, AZG		M	+/-	08/98 ▸	867959481	**820034**	84		95		22X1.5	29	
2.0 i	1J25, 1J1/0/1/2/3/5, 1J5/0/1/2/3/5	E		1984	AZJ, AQY, APK		A	+/-	08/98 ▸	867959481	**820034**	84		95		22X1.5	29	
2.0 i	1J1/2/5/6, 1J5/2/5	E		1984	APK,AQY,AZJ		M	+	08/98 ▸ 05/04	1J0959481A	●**820831**	85		90		22X1.5	29	
2.0 i	1J1/0/1/2/3/5/6, 1J5/0/1/2/3/5	E		1984	APK,AQY,AZG,AZH,AZJ		M		08/98 ▸ 06/06	1J0959481A	●**820831**	85		90		22X1.5	29	
2.0 i	1J25, 1J1/2/5, 1J5/2/5	E		1984	APK,AQY		A	+	08/98 ▸ 05/00	1J0959481A	●**820831**	85		90		22X1.5	29	
2.0 i	1J1/0/1/2/3, 1J5/0/1/2/3	F		1984	BEH		M		05/02 ▸ 06/06	1J0959481	**820302**	90		95		22X1.5	29	
2.0 i	1J52, 1J1/2/5/6	E		1984	APK,AQY,AZJ		M	-	08/98 ▸ 05/04	1J0959481	**820302**	90		95		22X1.5	29	
2.0 i	1J1/0/1/2/3/5/6, 1J5/0/1/2/3/5	E		1984	APK,AQY,AZG,AZH,AZJ		M		08/98 ▸ 06/06	1J0959481	**820302**	90		95		22X1.5	29	
2.0 i	1J25, 1J1/2/5, 1J5/2/5	E		1984	APK,AQY		A	-	08/98 ▸ 05/00	1J0959481	**820302**	90		95		22X1.5	29	
2.0 i	1J25, 1J1/0/1/2/3/5, 1J5/0/1/2/3	E		1984	APK,AQY,AZJ		A		08/98 ▸ 06/06	1J0959481	**820302**	90		95		22X1.5	29	
2.3 i VR5 20V	1J1/0/1/2/3/5/6, 1J5/3/5	E		2324	AGZ, AQN		M	+/-	10/97 ▸	867959481	**820034**	84		95		22X1.5	29	
2.3 i VR5 20V	1J1/0/1/2/3/5, 1J5/3/5	E		2324	AQN, AGZ		A	+/-	10/97 ▸	867959481	**820034**	84		95		22X1.5	29	
2.3 i VR5 20V	1J55, 1J1/5/6	E		2324	AGZ		M	+	10/97 ▸ 05/00	1J0959481A	●**820831**	85		90		22X1.5	29	
2.3 i VR5 20V	1J15, 1J55	E		2324	AGZ		A	+	10/97 ▸ 05/00	1J0959481A	●**820831**	85		90		22X1.5	29	
2.3 i VR5 20V	1J55, 1J1/5/6	E		2324	AGZ		M	-	10/97 ▸ 05/00	1J0959481	**820302**	90		95		22X1.5	29	
2.3 i VR5 20V	1J53, 1J1/0/1/2/3/5/6	E		2324	AGZ,AQN		M		10/97 ▸ 06/05	1J0959481	**820302**	90		95		22X1.5	29	
2.3 i VR5 20V	1J15, 1J55	E		2324	AGZ		A	-	10/97 ▸ 05/00	1J0959481	**820302**	90		95		22X1.5	29	
2.3 i VR5 20V	1J53, 1J1/0/1/2/3/5	E		2324	AGZ,AQN		A		10/97 ▸ 05/06	1J0959481	**820302**	90		95		22X1.5	29	
2.8 i V6 24V 2.8 i VR6 24V	1J1/3/5/6, 1J5/3/5/6	E		2792	AUE, BDE, AQP		M	+/-	05/99 ▸	867959481	**820034**	84		95		22X1.5	29	
2.8 i V6 24V	1J5/5/6	E		2792	AQP		M	+	05/99 ▸ 05/00	1J0959481A	●**820831**	85		90		22X1.5	29	
2.8 i V6 24V 2.8 i VR6 24V	1J1/3/5/6, 1J5/3/5/6	E		2792	AQP,AUE,BDE		M		05/99 ▸ 06/05	1J0959481A	●**820831**	85		90		22X1.5	29	
2.8 i V6 24V	1J5/5/6	E		2792	AQP		M	-	05/99 ▸ 05/00	1J0959481	**820302**	90		95		22X1.5	29	
2.8 i V6 24V 2.8 i VR6 24V	1J1/3/5/6, 1J5/3/5/6	E		2792	AQP,AUE,BDE		M		05/99 ▸ 06/05	1J0959481	**820302**	90		95		22X1.5	29	
3.2 i V6	1J1R	E		3189	BFH		M		06/02 ▸ 05/04	867959481	**820034**	84		95		22X1.5	29	
3.2 i V6	1J1R	E		3189	BFH		A		06/02 ▸	867959481	**820034**	84		95		22X1.5	29	
3.2 i V6	1J1R	E		3189	BFH		M		06/02 ▸ 05/04	1J0959481A	●**820831**	85		90		22X1.5	29	
3.2 i V6	1J1R	E		3189	BFH		M		06/02 ▸ 05/04	1J0959481	**820302**	90		95		22X1.5	29	
3.2 i V6	1J1R	E		3189	BFH		A		06/02 ▸ 05/04	1J0959481	**820302**	90		95		22X1.5	29	
1.9 SDi,1.9 TDi	1J1/0/1/2/3/5/6, 1J5/0/1 2/3/5	D		1896	AGR, AHF, ALH, ATD, AJM, AQM AGP, AUY, AXR, ASZ, ASV, ARL		M	+/-	10/97 ▸	867959481	**820034**	84		95		22X1.5	29	
1.9 TDi	1J1/0/1/2/3/5, 1J5/0/1/2 3/5	D		1896	ATD, AHF, AUY, AGR, ALH, ASZ		A	+/-	10/97 ▸	867959481	**820034**	84		95		22X1.5	29	
1.9 SDi,1.9 TDi	1J1/2/5/6, 1J5/2/5	D		1896	AGP,AGR,AHF,AJM,ALH,AQM,ATD AUY		M	+	10/97 ▸ 05/06	1J0959481A	●**820831**	85		90		22X1.5	29	
1.9 TDi	1J1/2/5, 1J5/2/5	D		1896	AGR,AHF,ALH		A	+	10/97 ▸ 05/00	1J0959481A	●**820831**	85		90		22X1.5	29	

• **New** Nouveau **Nuevo** Novo **Nuovo** Nieuw **Neu** Yeni Новый Nou

VOLKSWAGEN (.../...)

Golf IV (97>2003) (.../...)

1.9 TDi	1J1/0/1/2/3/5, 1J5/0/1/2 3/5	D	1896	AGR,AHF,ALH,ASZ,ATD,AUY	A			10/97 ▸ 05/06	1J0959481A	●820831	85		90		22X1.5	29
1.9 SDi,1.9 TDi	1J1/2/5/6, 1J5/2/5	D	1896	AGP,AGR,AHF,AJM,ALH,AQM,ATD AUY	M	-		10/97 ▸ 05/06	1J0959481	820302	90		95		22X1.5	29
1.9 SDi,1.9 TDi	1J1/0/1/2/3/5/6, 1J5/0/1 2/3/5	D	1896	AGP,AGR,AHF,AJM,ALH,AQM,ARL ASV,ASZ,ATD,AUY,AXR	M			10/97 ▸ 06/06	1J0959481	820302	90		95		22X1.5	29
1.9 TDi	1J1/2/5, 1J5/2/5	D	1896	AGR,AHF,ALH	A	-		10/97 ▸ 05/00	1J0959481	820302	90		95		22X1.5	29
1.9 TDi	1J1/0/1/2/3/5, 1J5/0/1/2 3/5	D	1896	AGR,AHF,ALH,ASZ,ATD,AUY	A			10/97 ▸ 05/06	1J0959481	820302	90		95		22X1.5	29

Golf V (2003>)

1.4 i 16V	1K1/0/1/2	E	1390	BCA	M	-		10/03 ▸ 05/06	1J0959481A	●820831	85		90		22X1.5	29
1.4 FSi 16V	1K1/0/1/2	E	1390	BLN	M			11/04 ▸ 05/06	1J0959481A	●820831	85		90		22X1.5	29
1.6 i	1K1/0/1/2	E	1595	BSE,BSF	M			06/05 ▸ 11/08	1J0959481A	●820831	85		90		22X1.5	29
1.6 i	1K1/0/1	E	1595	BSE,BSF	A			06/05 ▸ 11/08	1J0959481A	●820831	85		90		22X1.5	29
1.6 FSi 16V	1K1/0/1/2	E	1598	BLF	M			01/05 ▸ 07/08	1J0959481A	●820831	85		90		22X1.5	29
1.6 FSi 16V	1K1/0/1/2	E	1598	BLF	A			01/05 ▸ 07/08	1J0959481A	●820831	85		90		22X1.5	29
2.0 SDi	1K1/0/1/2	D	1968	BDK	M			01/04 ▸ 11/08	1J0959481A	●820831	85		90		22X1.5	29

Golf V Plus (2005>)

1.4 i 16V	5M1/0/1	E	1390	BCA	M	-		01/05 ▸ 05/06	1J0959481A	●820831	85		90		22X1.5	29
1.4 FSi 16V	5M1/0/1/2	E	1390	BLN	M			07/05 ▸ 05/06	1J0959481A	●820831	85		90		22X1.5	29
1.6 i	5M1/0/1/2	E	1595	BSE,BSF	M			05/05 ▸	1J0959481A	●820831	85		90		22X1.5	29
1.6 i	5M1/0/1/2	E	1595	BSE,BSF	A			05/05 ▸	1J0959481A	●820831	85		90		22X1.5	29
1.6 FSi 16V	5M1/0/1/2	E	1598	BLF	M			01/05 ▸ 01/09	1J0959481A	●820831	85		90		22X1.5	29
1.6 FSi 16V	5M1/0/1/2	E	1598	BLF	A			04/05 ▸ 05/08	1J0959481A	●820831	85		90		22X1.5	29

Jetta I (78>83)

1.1	161/0/2, 162/1/2	E	1093	GG	M			08/80 ▸ 02/84	191959481B	819743	84		94		22X1.5	29
1.1	1612, 1622	E	1093	GG	M			08/81 ▸ 02/84	191959481C	819769	84	91	95	102	22X1.5	29
1.3	1630, 161/0/2	E	1272	GS, GF	M			08/79 ▸ 02/84	191959481B	819743	84		94		22X1.5	29
1.3	1630, 161/0/2	E	1272	GS, GF	M			08/81 ▸ 02/84	191959481C	819769	84	91	95	102	22X1.5	29
1.5	1632, 161/0/1/2	E	1457	GH, JB	M			08/78 ▸ 02/84	191959481B	819743	84		94		22X1.5	29
1.5	1632, 161/1/2	E	1457	JB, GH	M			08/81 ▸ 02/84	191959481C	819769	84	91	95	102	22X1.5	29
1.5	1632, 161/0/1/2	E	1457	GH, JB	A			08/78 ▸ 07/83	191959481B	819743	84		94		22X1.5	29
1.5	1612, 1632	E	1457	JB, GH	A			08/81 ▸ 07/83	191959481C	819769	84	91	95	102	22X1.5	29
1.6	1620, 1641, 161/0/1/2	E	1588	EG, FR, EM, EJ	M			08/78 ▸ 02/84	191959481B	819743	84		94		22X1.5	29
1.6	1620, 161/0/2	E	1588	FR, EG, EM	M			08/81 ▸ 02/84	191959481C	819769	84	91	95	102	22X1.5	29
1.6	1620, 1641, 161/0	E	1588	EM, FR	A			08/79 ▸ 07/83	191959481B	819743	84		94		22X1.5	29
1.6	1610, 1620	E	1588	EM, FR	A			08/81 ▸ 07/83	191959481C	819769	84	91	95	102	22X1.5	29
1.7	1610	E	1716	EN	M			08/80 ▸ 07/82	191959481B	819743	84		94		22X1.5	29
1.7	1610	E	1716	EN	M			08/81 ▸ 07/82	191959481C	819769	84	91	95	102	22X1.5	29
1.7	1610	E	1716	EN	A			08/80 ▸ 07/81	191959481B	819743	84		94		22X1.5	29
1.8	1612, 1632	E	1781	JJ, DX	M			08/82 ▸ 02/84	191959481B	819743	84		94		22X1.5	29
1.8	1612, 1632	E	1781	JJ, DX	M			08/82 ▸ 02/84	191959481C	819769	84	91	95	102	22X1.5	29
1.6 D,1.6 TD	1620, 161/0/1	D	1588	CY, JK, CR	M			08/80 ▸ 02/84	191959481B	819743	84		94		22X1.5	29
1.6 D,1.6 TD	1620, 161/0/1	D	1588	JK, CR, CY	M			08/81 ▸ 02/84	191959481C	819769	84	91	95	102	22X1.5	29
1.6 D	161/0/1	D	1588	CR, JK	A			08/81 ▸ 07/83	191959481B	819743	84		94		22X1.5	29
1.6 D	161/0/1	D	1588	JK, CR	A			08/81 ▸ 07/83	191959481C	819769	84	91	95	102	22X1.5	29

Jetta II (83>92)

1.05	1G22, 167/0/1	E	1043	HZ	M			08/86 ▸ 10/91	191959481C	819769	84	91	95	102	22X1.5	29
1.05	1G22, 167/0/1	E	1043	HZ	M			08/86 ▸ 10/91	191959481B	819743	84		94		22X1.5	29
1.3,1.3 i	165/0/1/2/G/H/J, 167/0/1 2/3/G/H/J, 168/0/1, 1G2/2 3	E	1272	NZ, HK, MH, GT, 2C, NU	M			08/83 ▸ 07/92	191959481C	819769	84	91	95	102	22X1.5	29
1.3,1.3 i	165/0/1/2/G/H/J, 167/0/1 2/3/G/H/J, 168/0/1, 1G2/2 3	E	1272	NZ, MH, NU, HK, GT, 2C	M			08/83 ▸ 07/92	191959481B	819743	84		94		22X1.5	29
1.6	165/0/1/2/G/H/J, 167/0/1/2/G/H/J 168/0/1/2, 1G2/2/3	E	1595	EZ, RF, HM, PN	M			08/83 ▸ 07/92	191959481C	819769	84	91	95	102	22X1.5	29
1.6	165/0/1/2/G/H/J, 167/0/1/2/G/H/J 168/0/1/2, 1G2/2/3	E	1595	PN, EZ, RF, HM	M			08/83 ▸ 07/92	191959481B	819743	84		94		22X1.5	29

• **New** Nouveau **Nuevo** Novo **Nuovo** Nieuw **Neu** Yeni Новый Nou

		Type Ctr.		CC			AC			OE	Valeo	(°)C T1	T2	T3	T4	COD.	○: mm	
VOLKSWAGEN (.../...)																		
Jetta II (83>92) (.../...)																		
1.6	*165/0/1/2, 167/0/1/2, 168/0/1/2 1G2/2/3*		E	1595	EZ, RF, HM, PN	A			08/83 ▸ 07/92	191959481B	**819743**	84		94		22X1.5	29	
1.6	*165/0/1/2, 167/0/1/2, 168/0/1/2 1G2/2/3*		E	1595	EZ, RF, HM, PN	A			08/83 ▸ 07/92	191959481C	**819769**	84	91	95	102	22X1.5	29	
1.8,1.8 i,1.8 i 16V	*165/0/1/2/3/G/H/J/N/S/T 167/0/1/2/3/7/G/H/J/K/N S/T/U/N/Z, 168/0/2/3/7/U V/Z, 1G2/1/2/3/5*		E	1781	HV, PF, RV, RD, GX, RP, GZ GU, EV, KR, PB, RH, PL, GU-K 1P	M	+/-		01/84 ▸ 1991	191959481C	**819769**	84	91	95	102	22X1.5	29	
1.8,1.8 i,1.8 i 16V	*165/0/1/2/3/G/H/J/N/S/T 167/0/1/2/3/7/G/H/J/K/N S/T/U/N/Z, 168/0/2/3/7/U V/Z, 1G2/1/2/3/5*		E	1781	GU, RP, GZ, RV, PF, GX, HV GU-K, RH, EV, KR, PL, RD, 1P PB	M			01/84 ▸ 10/91	191959481B	**819743**	84		94		22X1.5	29	
1.8,1.8 i	*165/0/1/2/G/H/J, 167/0/1 2/7/G/H/J/K, 168/0/2/7 1G2/1/2/3*		E	1781	RV, GX, HV, RP, GU, RH, PF	A			01/84 ▸ 10/91	191959481B	**819743**	84		94		22X1.5	29	
1.8,1.8 i	*165/0/1/2/G/H/J, 167/0/1 2/7/G/H/J/K, 168/0/2/7 1G2/1/2/3*		E	1781	RP, RV, GX, GU, HV, RH, PF	A			01/84 ▸ 10/91	191959481C	**819769**	84	91	95	102	22X1.5	29	
1.6 D,1.6 TD	*165/0/1/2/T, 167/0/1/2/7 T, 168/0/1/2, 1G2/1/2/3/5*		D	1588	ME, JP, JR, SB, MF, RA, 1V	M			08/83 ▸ 07/92	191959481B	**819743**	84		94		22X1.5	29	
1.6 D,1.6 TD	*165/0/1/2/T, 167/0/1/2/7 T, 168/0/1/2, 1G2/1/2/3/5*		D	1588	JP, ME, JR, SB, MF, 1V, RA	M			08/83 ▸ 07/92	191959481C	**819769**	84	91	95	102	22X1.5	29	
1.6 D	*165/0/1/2, 167/0/1/2, 1G2/2/3*		D	1588	JP	A			08/83 ▸ 07/90	191959481C	**819769**	84	91	95	102	22X1.5	29	
1.6 D	*165/0/1/2, 167/0/1/2, 1G2/2/3*		D	1588	JP	A			08/83 ▸ 07/90	191959481B	**819743**	84		94		22X1.5	29	
Lupo																		
1.0 i	*6X10*		E	999	ANV, ALD, ALL, AER, AHT, AUC	M			10/98 ▸	1H0959481B	**820035**	84	91	95	102	22X1.5	29	
1.0 i	*6X10*		E	999	ALD, ALL, AUC, AHT, ANV, AER	M			10/98 ▸	867959481	**820034**	84		95		22X1.5	29	
1.4 FSI 16V,1.4 i 1.4 i 16V	*6E10, 6X10*		E	1390	AUB, BBY, AHW, AUA, AQQ, APE AUD, AFK, AKQ, ARR	M			10/98 ▸	1H0959481B	**820035**	84	91	95	102	22X1.5	29	
1.4 FSI 16V,1.4 i 1.4 i 16V	*6E10, 6X10*		E	1390	AUB, AHW, ARR, AUA, AFK, AQQ AUD, APE, BBY, AKQ	M			10/98 ▸	867959481	**820034**	84		95		22X1.5	29	
1.4 i 16V	*6X10*		E	1390	BBY, AHW, APE, AUA, AKQ	A			10/98 ▸	867959481	**820034**	84		95		22X1.5	29	
1.4 i 16V	*6X10*		E	1390	AHW, AUA, APE, BBY, AKQ	A			10/98 ▸	1H0959481B	**820035**	84	91	95	102	22X1.5	29	
1.6 i 16V	*6E10*		E	1598	AVY	M			06/00 ▸	1H0959481B	**820035**	84	91	95	102	22X1.5	29	
1.6 i 16V	*6E10*		E	1598	AVY	M			06/00 ▸	867959481	**820034**	84		95		22X1.5	29	
1.2 TDi	*6E10*		D	1191	ANY, AYZ	M			05/99 ▸ 05/03	867959481	**820034**	84		95		22X1.5	29	
1.2 TDi	*6E10*		D	1191	ANY, AYZ	M			05/99 ▸ 05/03	1H0959481B	**820035**	84	91	95	102	22X1.5	29	
1.2 TDi	*6E10*		D	1191	ANY,AYZ	M	+		05/99 ▸ 07/05	191919369A	**●820833**			120		20		
1.4 TDi	*6X10*		D	1422	AMF	M			05/99 ▸	1H0959481B	**820035**	84	91	95	102	22X1.5	29	
1.4 TDi	*6X10*		D	1422	AMF	M			05/99 ▸ 07/05	6X0959481	**820302**	90		95		22X1.5	29	
1.7 SDi	*6X10*		D	1716	AKU	M			10/98 ▸	1H0959481B	**820035**	84	91	95	102	22X1.5	29	
1.7 SDi	*6X10*		D	1716	AKU	M			10/98 ▸	867959481	**820034**	84		95		22X1.5	29	
New Beetle (98>2001)																		
1.6 i	*9C13*		E	1595	AWH,AYD	M			11/99 ▸ 05/01	1J0959481A	**●820831**	85		90		22X1.5	29	
1.6 i	*9C13*		E	1595	AYD	A			06/00 ▸ 05/01	1J0959481A	**●820831**	85		90		22X1.5	29	
1.8 i Turbo 20V	*9C13, 1C1/5/7/8*		E	1781	APH,AVC,AWU,AWV	M			07/99 ▸ 05/01	1J0959481A	**●820831**	85		90		22X1.5	29	
1.8 i Turbo 20V	*1C1/5/7/8*		E	1781	APH,AWV	A			01/99 ▸ 05/01	1J0959481A	**●820831**	85		90		22X1.5	29	
2.0 i	*9C13, 1C1/3/8*		E	1984	AEG,AQY	M			01/98 ▸ 05/01	1J0959481A	**●820831**	85		90		22X1.5	29	
2.0 i	*9C13, 1C1/3/5/8*		E	1984	AEG,APK,AQY	A			01/98 ▸ 05/01	1J0959481A	**●820831**	85		90		22X1.5	29	
2.3 i V5 20V	*9C13*		E	2324	AQN	M			10/00 ▸ 05/01	1J0959481A	**●820831**	85		90		22X1.5	29	
3.2 i V6 24V	*1C95*		E	3189	AXJ	M			10/00 ▸ 05/01	1J0959481A	**●820831**	85		90		22X1.5	29	
1.9 TDi	*9C13, 1C1/3/5/8*		D	1896	ALH,ATD	M			11/98 ▸ 05/01	1J0959481A	**●820831**	85		90		22X1.5	29	
1.9 TDi	*9C13, 1C1/3/5/8*		D	1896	ALH	A			11/98 ▸ 05/01	1J0959481A	**●820831**	85		90		22X1.5	29	
New Beetle (2001>2005)																		
1.4 i 16V	*1C13, 1Y73*		E	1390	BCA	M			08/01 ▸ 06/05	1J0959481A	**●820831**	85		90		22X1.5	29	
1.6 i	*1Y73, 9C13, 1C1/3*		E	1595	AYD,BFS	M			06/01 ▸ 06/05	1J0959481A	**●820831**	85		90		22X1.5	29	
1.6 i	*1C13, 9C13*		E	1595	AYD,BFS	A			06/01 ▸ 06/05	1J0959481A	**●820831**	85		90		22X1.5	29	
1.8 i Turbo 20V	*1Y73, 9C13, 1C1/3/6/7/8/S*		E	1781	AWP,AWU,AWV	M			06/01 ▸ 06/05	1J0959481A	**●820831**	85		90		22X1.5	29	
1.8 i Turbo 20V	*9C13, 1C1/3/8/S*		E	1781	AWU,AWV	A			06/01 ▸ 06/05	1J0959481A	**●820831**	85		90		22X1.5	29	
2.0 i	*1Y73, 9C13, 1C1/3/5/8*		E	1984	AEG,APK,AQY,AZJ,BEJ	M			06/01 ▸ 06/05	1J0959481A	**●820831**	85		90		22X1.5	29	
2.0 i	*1Y73, 9C13, 1C1/3/5/8*		E	1984	AEG,APK,AQY,AZJ,BEJ	A			06/01 ▸ 06/05	1J0959481A	**●820831**	85		90		22X1.5	29	

• **New** Nouveau **Nuevo** Novo **Nuovo** Nieuw **Neu** Yeni Новый Nou

VOLKSWAGEN (.../...)

New Beetle (2001>2005) (.../...)

1.9 TDi	1C13, 9C13	D	1896	ALH,ATD	M			06/01 ▸ 06/05	1J0959481A	●820831	85		90		22X1.5	29
1.9 TDi	1C13, 9C13	D	1896	ALH	A			06/01 ▸ 06/04	1J0959481A	●820831	85		90		22X1.5	29
2.3 i V5 20V	1C13, 9C13	E	2324	AQN	M			06/01 ▸ 06/05	1J0959481A	●820831	85		90		22X1.5	29

New Beetle (2005>)

1.4 i 16V	1C13, 1Y73	E	1390	BCA	M			07/05 ▸	1J0959481A	●820831	85		90		22X1.5	29
1.6 i	1C13, 1Y73	E	1595	BFS	M			07/05 ▸	1J0959481A	●820831	85		90		22X1.5	29
1.6 i	1C13	E	1595	BFS	A			07/05 ▸	1J0959481A	●820831	85		90		22X1.5	29
1.8 i Turbo 20V	1C13, 1Y73	E	1781	AWU	M			07/05 ▸	1J0959481A	●820831	85		90		22X1.5	29
1.8 i Turbo 20V	1C13	E	1781	AWU	A			07/05 ▸	1J0959481A	●820831	85		90		22X1.5	29
2.0 i	1Y73, 1C1/3/5	E	1984	AZJ,BER,BHP	M			07/05 ▸	1J0959481A	●820831	85		90		22X1.5	29
2.0 i	1Y73, 1C1/3/5	E	1984	AZJ,BER,BHP	A			07/05 ▸	1J0959481A	●820831	85		90		22X1.5	29
2.5 i 20V	1Y75	E	2451	BPR,BPS	M			07/05 ▸	1J0959481A	●820831	85		90		22X1.5	29
2.5 i 20V	1Y75	E	2451	BPR,BPS	A			07/05 ▸	1J0959481A	●820831	85		90		22X1.5	29
1.9 TDi	1Y73, 1C1/3/4/5	D	1896	BSW	M			07/05 ▸	1J0959481A	●820831	85		90		22X1.5	29
1.9 TDi	1C1/4/5	D	1896	BEW	A			07/05 ▸	1J0959481A	●820831	85		90		22X1.5	29

Passat (73>82)

1.3	3220, 3231, 3240, 321/1/2, 3320 331/0/1/2	E	1272	FZ, ZF, ZA, FY	M			05/73 ▸ 07/78	823959481F	819759	87		92		22X1.5	29
1.3	321/2, 3320, 331/0/1/2	E	1272	FZ, FY	M			08/78 ▸ 07/81	191959481B	819743	84		94		22X1.5	29
1.5	321/0/2	E	1471	YJ, ZC	M			09/75 ▸ 12/75	823959481F	819759	87		92		22X1.5	29
1.5	3210	E	1471	ZC, YJ, ZB	A			05/73 ▸ 12/75	823959481F	819759	87		92		22X1.5	29
1.6	3215	E	1588	WY	M	+		08/80 ▸ 07/81	191959481C	819769	84	91	95	102	22X1.5	29
1.6	3231, 321/0/1, 331/1/2	E	1588	YP, FS, YN, YG	M			09/75 ▸ 07/78	823959481F	819759	87		92		22X1.5	29
1.6	3225, 3232, 321/0/1/2/5, 331/1/2	E	1588	FS, YY, WP, YS, WZ, WY, YN YP	M			08/78 ▸ 07/81	191959481B	819743	84		94		22X1.5	29
1.6	3215, 3237	E	1588	WY	A	+		08/80 ▸ 07/81	191959481C	819769	84	91	95	102	22X1.5	29
1.6	3230, 321/0/1/5	E	1588	YN, YP	A			09/75 ▸ 07/78	823959481F	819759	87		92		22X1.5	29
1.6	321/5, 323/0/7	E	1588	YP, YN, WY	A			08/78 ▸ 07/81	191959481B	819743	84		94		22X1.5	29
1.9	3236	E	1921	WN	M			01/81 ▸ 07/81	191959481B	819743	84		94		22X1.5	29
1.9	3236	E	1921	WN	A			01/81 ▸ 07/81	191959481B	819743	84		94		22X1.5	29
2.2	3216	E	2144	WE	M			01/81 ▸ 07/81	191959481B	819743	84		94		22X1.5	29
2.2	3216	E	2144	WE	A			01/81 ▸ 07/81	191959481B	819743	84		94		22X1.5	29
1.5 D	3311	D	1471	CK	M			08/77 ▸ 07/78	823959481F	819759	87		92		22X1.5	29
1.5 D	3311	D	1471	CK	M			08/78 ▸ 07/80	191959481B	819743	84		94		22X1.5	29
1.6 D	3216	D	1588	CR	M			08/80 ▸ 07/81	191959481B	819743	84		94		22X1.5	29

Passat (82>88)

1.3	321/5/6/7, 322/5/7, 323/5/6/7, 324 5/6/7, 331/5/6/7, 332/5/6/7	E	1272	FY, FZ	M	+/-		08/81 ▸ 07/83	191959481C	819769	84	91	95	102	22X1.5	29
1.3	321/5/6/7, 322/5/7, 323/5/6/7, 324 5/6/7, 331/5/6/7, 332/5/6/7	E	1272	FZ, FY	M			08/81 ▸ 07/83	191959481B	819743	84		94		22X1.5	29
1.3	321/0/1/5/6, 323/0/1/2/5/6/7/R/S 327/R/S, 331/0/1/5/6/7/R/S	E	1297	EP, EU	M			08/83 ▸ 04/88	191959481B	819743	84		94		22X1.5	29
1.3	321/0/1/5/6, 323/0/1/2/5/6/7/R/S 327/R/S, 331/0/1/5/6/7/R/S	E	1297	EP, EU	M			08/83 ▸ 04/88	191959481C	819769	84	91	95	102	22X1.5	29
1.3,1.3 i	323/6, 331/6/7	E	1297	EU	A			08/83 ▸ 07/84	191959481B	819743	84		94		22X1.5	29
1.3,1.3 i	323/6, 331/6/7	E	1297	EU	A			08/83 ▸ 07/84	191959481C	819769	84	91	95	102	22X1.5	29
1.6	321/5/6/7/A/B/C, 322/5/6/7, 323/5/6 7/A/B/C, 324/5/6/7/A/B/C, 331/5/6/7 A/B/C, 332/5/6/7/A/B/C	E	1588	WV, YP, WY	M	+/-		08/81 ▸ 04/88	191959481C	819769	84	91	95	102	22X1.5	29
1.6	321/5/6/7/A/B/C, 322/5/6/7, 323/5/6 7/A/B/C, 324/5/6/7/A/B/C, 331/5/6/7 A/B/C, 332/5/6/7/A/B/C	E	1588	WY, WV, YP	M			08/81 ▸ 04/88	191959481B	819743	84		94		22X1.5	29
1.6	321/5/6/7, 322/5/6/7, 323/5/6/7 324/5/6/7, 331/5/6/7, 332/5/6/7	E	1588	WV, YP, WY	A	+/-		08/81 ▸ 12/84	191959481C	819769	84	91	95	102	22X1.5	29
1.6	321/5/6/7, 322/5/6/7, 323/5/6/7 324/5/6/7, 331/5/6/7, 332/5/6/7	E	1588	YP, WV, WY	A			08/81 ▸ 12/84	191959481B	819743	84		94		22X1.5	29
1.6	321/0/1/2, 323/0/1/2/D/J/K/L/R/S/T 324/0/R, 328R, 327/R/S/T, 331/0/1 6/7/C/D/K/L/R/S/T, 332/0/5	E	1595	DTA, DT, JU, PP	M			08/83 ▸ 04/88	191959481C	819769	84	91	95	102	22X1.5	29

• **New** Nouveau **Nuevo** Novo **Nuovo** Nieuw **Neu** Yeni Новый Nou

			Type Ctr.		CC			AC			OE	Valeo	(°)C T1	T2	T3	T4	COD.	mm	
VOLKSWAGEN (.../...)																			
Passat (82>88) (.../...)																			
1.6	321/0/1/2, 323/0/1/2/D/J/K/L/R/S/T 324/0/R, 328R, 327/R/S/T, 331/0/1 6/7/C/D/K/L/R/S/T, 332/0/5	E		1595	DT, JU, DTA, PP	M			08/83 ▸ 04/88	191959481B	**819743**	84		94		22X1.5	29	
1.6	321/0/1/2, 323/0/1/2/D/R/S/T, 327/R S/T, 331/0/1/D/R/S/T	E		1595	DT	A			08/84 ▸ 04/88	191959481B	**819743**	84		94		22X1.5	29	
1.6	321/0/1/2, 323/0/1/2/D/R/S/T, 327/R S/T, 331/0/1/D/R/S/T	E		1595	DT	A			08/84 ▸ 04/88	191959481C	**819769**	84	91	95	102	22X1.5	29	
1.8,1.8 i	321/0/1/2/6, 323/0/1/2/D E/G/H/J/K/L/R/S/T, 324/D S, 327/7/J/K/L/R/S/T, 328 S/T, 331/0/1/D/E/G/H/J/K L/R/S/T/U/Y, 332/1/S	E		1781	DS, JN, JV, RM	M	+/-		08/83 ▸ 07/88	191959481C	**819769**	84	91	95	102	22X1.5	29	
1.8,1.8 i	321/0/1/2/6, 323/0/1/2/D E/G/H/J/K/L/R/S/T, 324/D S, 327/7/J/K/L/R/S/T, 328 S/T, 331/0/1/D/E/G/H/J/K L/R/S/T/U/Y, 332/1/S	E		1781	JV, DS, JN, RM	M			08/83 ▸ 07/88	191959481B	**819743**	84		94		22X1.5	29	
1.8,1.8 i	321/0/1/2, 324S, 323/0/1 2/D/E/G/H/J/K/L/R/S/T 327/7/J/K/L/R/S/T, 328/S T, 331/0/1/D/E/G/H/J/K/L R/S/T, 332/1/S	E		1781	JV, DS, JN, RM	A	+/-		08/83 ▸ 04/88	191959481C	**819769**	84	91	95	102	22X1.5	29	
1.8,1.8 i	321/0/1/2, 324S, 323/0/1 2/D/E/G/H/J/K/L/R/S/T 327/7/J/K/L/R/S/T, 328/S T, 331/0/1/D/E/G/H/J/K/L R/S/T, 332/1/S	E		1781	JV, DS, RM, JN	A			08/83 ▸ 04/88	191959481B	**819743**	84		94		22X1.5	29	
1.9	321/5/6/7, 323/5/6/7, 324/5/6/7 331/5/6/7, 332/5/6/7	E		1921	WN	M	+/-		08/81 ▸ 07/83	191959481C	**819769**	84	91	95	102	22X1.5	29	
1.9	321/5/6/7, 323/5/6/7, 324/5/6/7 331/5/6/7, 332/5/6/7	E		1921	WN	M			08/81 ▸ 07/83	191959481B	**819743**	84		94		22X1.5	29	
1.9	321/5/6/7, 323/5/6/7, 324/5/6/7 331/5/6/7, 332/5/6/7	E		1921	WN	A	+/-		08/81 ▸ 07/84	191959481C	**819769**	84	91	95	102	22X1.5	29	
1.9	321/5/6/7, 323/5/6/7, 324/5/6/7 331/5/6/7, 332/5/6/7	E		1921	WN	A			08/81 ▸ 07/84	191959481B	**819743**	84		94		22X1.5	29	
2.0 i	323/1/2/6/7/A/D/R/T, 324/1/2/A/D/R T, 327/C/R/T, 328/C/R/T, 331/1/6/7 8/D/P/R/T/N/W, 332/A/D/R/T	E		1994	JS, HP	M	+/-		08/83 ▸ 07/88	191959481C	**819769**	84	91	95	102	22X1.5	29	
2.0 i	323/1/2/6/7/A/D/R/T, 324/1/2/A/D/R T, 327/C/R/T, 328/C/R/T, 331/1/6/7 8/D/P/R/T/N/W, 332/A/D/R/T	E		1994	JS, HP	M			08/83 ▸ 07/88	191959481B	**819743**	84		94		22X1.5	29	
2.0 i	323/1/2/6/7/A/D/R/T, 324/1/2/A/D/R T, 327/C/R/T, 328/C/R/T, 331/1/6/7 A/D/R/T, 332/A/D/R/T	E		1994	JS, HP	A	+/-		08/83 ▸ 04/88	191959481C	**819769**	84	91	95	102	22X1.5	29	
2.0 i	323/1/2/6/7/A/D/R/T, 324/1/2/A/D/R T, 327/C/R/T, 328/C/R/T, 331/1/6/7 A/D/R/T, 332/A/D/R/T	E		1994	JS, HP	A			08/83 ▸ 04/88	191959481B	**819743**	84		94		22X1.5	29	
2.2,2.2 i	321/5/6/7, 323/5/6/7, 331 5/6/7	E		2144	WE	M	+/-		08/81 ▸ 07/83	191959481C	**819769**	84	91	95	102	22X1.5	29	
2.2,2.2 i	321/5/6/7, 323/5/6/7, 331 5/6/7	E		2144	WE	M			08/81 ▸ 07/83	191959481B	**819743**	84		94		22X1.5	29	
2.2,2.2 i	321/5/6/7, 323/5/6/7, 331 5/6/7	E		2144	WE	A	+/-		08/81 ▸ 07/83	191959481C	**819769**	84	91	95	102	22X1.5	29	
2.2,2.2 i	321/5/6/7, 323/5/6/7, 331 5/6/7	E		2144	WE	A			08/81 ▸ 07/83	191959481B	**819743**	84		94		22X1.5	29	
2.3,2.3 i	324K, 323/D/E/J/K, 328K 327/F/J/K, 332K, 331/8/D E/J/K/Q/W/Z	E		2226	KX, HY, JT, KV	M	+/-		08/84 ▸ 07/88	191959481C	**819769**	84	91	95	102	22X1.5	29	
2.3,2.3 i	324K, 323/D/E/J/K, 328K 327/F/J/K, 332K, 331/8/D E/J/K/Q/W/Z	E		2226	KX, KV, HY, JT	M			08/84 ▸ 07/88	191959481B	**819743**	84		94		22X1.5	29	
2.3 i	324K, 323/E/J/K, 328K, 327/F/J/K 332K, 331/E/J/K	E		2226	KX	A	+/-		08/85 ▸ 04/88	191959481C	**819769**	84	91	95	102	22X1.5	29	

• **New** Nouveau **Nuevo** Novo **Nuovo** Nieuw **Neu** Yeni Новый Nou

VOLKSWAGEN (.../...)

Passat (82>88) (.../...)

2.3 i	*324K, 323/E/J/K, 328K, 327/F/J/K 332K, 331/E/J/K*	E	2226	KX	A			08/85 ▸ 04/88	191959481B	**819743**	84		94		22X1.5	29
1.6 D,1.6 TD	*321/0/1/2/5/6/7, 322/5/6 7, 323/0/1/2/5/6/7/D/R/S T, 324/0/1/2/5/6/7/R/S/T 327/4/J/L/R/S/T, 328/R/S T, 331/0/1/5/6/7/D/R/S/T 332/0/1/5/6/7/R/S/T*	D	1588	JK, CY, CR	M			08/81 ▸ 04/88	191959481B	**819743**	84		94		22X1.5	29
1.6 D,1.6 TD	*321/0/1/2/5/6/7, 322/5/6 7, 323/0/1/2/5/6/7/D/R/S T, 324/0/1/2/6/7/R/S/T 327/4/J/L/R/S/T, 328/R/S T, 331/0/1/5/6/7/D/R/S/T 332/0/1/5/6/7/R/S/T*	D	1588	CR, CY, JK	M			08/81 ▸ 04/88	191959481C	**819769**	84	91	95	102	22X1.5	29
1.6 D,1.6 TD	*321/0/1/2/5/6/7, 322/5/6 7, 323/0/1/2/6/7/R/S/T 324/5/6/7, 327/R/S/T 331/0/1/5/6/7/R/S/T, 332 5/6/7*	D	1588	CR, JK, CY	A	+/-		08/81 ▸ 04/88	191959481C	**819769**	84	91	95	102	22X1.5	29
1.6 D,1.6 TD	*321/0/1/2/5/6/7, 322/5/6 7, 323/0/1/2/5/6/7/R/S/T 324/5/6/7, 327/R/S/T 331/0/1/5/6/7/R/S/T, 332 5/6/7*	D	1588	CR, JK, CY	A			08/81 ▸ 04/88	191959481B	**819743**	84		94		22X1.5	29

Passat (88>93)

1.6,1.6 i	*312/1/2/3, 315/1/2/3*	E	1595	RF, 1F, EZ, ABN	M			04/88 ▸ 07/92	191959481B	**819743**	84		94		22X1.5	29
1.6,1.6 i	*312/1/2/3, 315/1/2/3*	E	1595	1F, EZ, RF, ABN	M			04/88 ▸ 07/92	191959481C	**819769**	84	91	95	102	22X1.5	29
1.6,1.6 i	*312/2/3, 315/2/3*	E	1595	1F, EZ, RF	A			08/88 ▸ 07/90	191959481B	**819743**	84		94		22X1.5	29
1.6,1.6 i	*312/2/3, 315/2/3*	E	1595	1F, EZ, RF	A			08/88 ▸ 07/90	191959481C	**819769**	84	91	95	102	22X1.5	29
1.8,1.8 i,1.8 i 16V	*312/1/2/3/5, 315/1/2/3/5*	E	1781	ABS, KR, RP, PB, PG, PF, AAM	M			04/88 ▸ 10/93	191959481C	**819769**	84	91	95	102	22X1.5	29
1.8,1.8 i,1.8 i 16V	*312/1/2/3/5, 315/1/2/3/5*	E	1781	PB, RP, ABS, KR, AAM, PF	M			04/88 ▸ 10/93	191959481B	**819743**	84		94		22X1.5	29
1.8 i	*312/3/5*	E	1781	ABS	M			07/93 ▸ 10/93	1H0959481B	**820035**	84	91	95	102	22X1.5	29
1.8 i	*312/3/5*	E	1781	ABS	M			07/93 ▸ 10/93	867959481	**820034**	84		95		22X1.5	29
1.8,1.8 i,1.8 i 16V	*312/1/2/3/5, 315/1/2/3/5*	E	1781	ABS, PF, RP, PB, KR	A			08/88 ▸ 10/93	191959481C	**819769**	84	91	95	102	22X1.5	29
1.8,1.8 i,1.8 i 16V	*312/1/2/3/5, 315/1/2/3/5*	E	1781	ABS, RP, KR, PB, PF	A			08/88 ▸ 10/93	191959481B	**819743**	84		94		22X1.5	29
1.8 i	*3125*	E	1781	ABS	A			07/93 ▸ 10/93	867959481	**820034**	84		95		22X1.5	29
1.8 i	*3125*	E	1781	ABS	A			07/93 ▸ 10/93	1H0959481B	**820035**	84	91	95	102	22X1.5	29
2.0,2.0 i,2.0 i 16V	*312/1/2/3/5/8, 315/1/2/3 5/8*	E	1984	9A, 2E, ACX	M			04/88 ▸ 10/93	191959481C	**819769**	84	91	95	102	22X1.5	29
2.0,2.0 i,2.0 i 16V	*312/1/2/3/5/8, 315/1/2/3 5/8*	E	1984	9A, 2E, ACX	M			04/88 ▸ 10/93	191959481B	**819743**	84		94		22X1.5	29
2.0,2.0 i	*3153, 312/1/5*	E	1984	2E	M			07/93 ▸ 10/93	867959481	**820034**	84		95		22X1.5	29
2.0,2.0 i	*3153, 312/1/5*	E	1984	2E	M			07/93 ▸ 10/93	1H0959481B	**820035**	84	91	95	102	22X1.5	29
2.0,2.0 i,2.0 i 16V	*312/1/2/3/5/8, 315/1/2/3 5/8*	E	1984	9A, 2E	A			08/88 ▸ 10/93	191959481C	**819769**	84	91	95	102	22X1.5	29
2.0,2.0 i,2.0 i 16V	*312/1/2/3/5/8, 315/1/2/3 5/8*	E	1984	2E, 9A	A			08/88 ▸ 10/93	191959481B	**819743**	84		94		22X1.5	29
2.0,2.0 i 16V	*312/3/8*	E	1984	2E, 9A	A			07/93 ▸ 10/93	867959481	**820034**	84		95		22X1.5	29
2.0,2.0 i 16V	*312/3/8*	E	1984	2E, 9A	A			07/93 ▸ 10/93	1H0959481B	**820035**	84	91	95	102	22X1.5	29
2.8 i,2.8 i V6	*312/3/5/8, 315/3/5/8*	E	2792	AAA	M			06/91 ▸ 10/93	191959481B	**819743**	84		94		22X1.5	29
2.8 i,2.8 i V6	*312/3/5/8, 315/3/5/8*	E	2792	AAA	M			06/91 ▸ 10/93	191959481C	**819769**	84	91	95	102	22X1.5	29
2.8 i,2.8 i V6,2.8 i VR6	*312/3/5/8, 315/3/5/8*	E	2792	AAA	A			06/91 ▸ 10/93	191959481B	**819743**	84		94		22X1.5	29
2.8 i,2.8 i V6,2.8 i VR6	*312/3/5/8, 315/3/5/8*	E	2792	AAA	A			06/91 ▸ 10/93	191959481C	**819769**	84	91	95	102	22X1.5	29
2.8 i,2.8 i V6,2.8 i VR6	*312/3/5/8, 315/3/5/8*	E	2792	AAA	A			07/93 ▸ 10/93	1H0959481B	**820035**	84	91	95	102	22X1.5	29
2.8 i,2.8 i V6,2.8 i VR6	*312/3/5/8, 315/3/5/8*	E	2792	AAA	A			07/93 ▸ 10/93	867959481	**820034**	84		95		22X1.5	29
1.6 TD	*312/1/2/3/5, 315/1/2/3/5*	D	1588	SB, RA	M			06/88 ▸ 10/93	191959481C	**819769**	84	91	95	102	22X1.5	29
1.6 TD	*312/1/2/3/5, 315/1/2/3/5*	D	1588	SB, RA	M			06/88 ▸ 10/93	191959481B	**819743**	84		94		22X1.5	29
1.6 TD	*3151*	D	1588	SB	M			07/93 ▸ 10/93	867959481	**820034**	84		95		22X1.5	29
1.6 TD	*3151*	D	1588	SB	M			07/93 ▸ 10/93	1H0959481B	**820035**	84	91	95	102	22X1.5	29
1.6 TD	*312/2/3/5, 315/2/3/5*	D	1588	RA	A			08/88 ▸ 07/90	191959481B	**819743**	84		94		22X1.5	29
1.6 TD	*312/2/3/5, 315/2/3/5*	D	1588	RA	A			08/88 ▸ 07/90	191959481C	**819769**	84	91	95	102	22X1.5	29
1.9 D,1.9 TD	*312/1/2/3/8, 315/1/2/3*	D	1896	AAZ, 1Y	M			08/88 ▸ 10/93	191959481B	**819743**	84		94		22X1.5	29
1.9 D,1.9 TD	*312/1/2/3/8, 315/1/2/3*	D	1896	1Y, AAZ	M			08/88 ▸ 10/93	191959481C	**819769**	84	91	95	102	22X1.5	29

• **New** Nouveau **Nuevo** Novo **Nuovo** Nieuw **Neu** Yeni Новый Nou

VOLKSWAGEN (.../...)

Passat (88>93) (.../...)

1.9 D	3121	D	1896	1Y	M			07/93 ▸ 10/93	1H0959481B	**820035**	84	91	95	102	22X1.5	29
1.9 D	3121	D	1896	1Y	M			07/93 ▸ 10/93	867959481	**820034**	84		95		22X1.5	29
1.9 D,1.9 TD	312/1/2/3, 315/1/2/3	D	1896	AAZ, 1Y	A			08/88 ▸ 10/93	191959481C	**819769**	84	91	95	102	22X1.5	29
1.9 D,1.9 TD	312/1/2/3, 315/1/2/3	D	1896	1Y, AAZ	A			08/88 ▸ 10/93	191959481B	**819743**	84		94		22X1.5	29
1.9 TD	312/1/2/3, 315/1/2/3	D	1896	AAZ	A			07/93 ▸ 10/93	867959481	**820034**	84		95		22X1.5	29
1.9 TD	312/1/2/3, 315/1/2/3	D	1896	AAZ	A			07/93 ▸ 10/93	1H0959481B	**820035**	84	91	95	102	22X1.5	29

Passat (93>97)

1.6 i	3A2/2/3/5/A, 3A5/2/3/5/C	E	1598	AFT, AEK	M			10/94 ▸ 12/96	1H0959481B	**820035**	84	91	95	102	22X1.5	29
1.6 i	3A2/2/3/5/A, 3A5/2/3/5/C	E	1598	AEK, AFT	M			10/94 ▸ 12/96	867959481	**820034**	84		95		22X1.5	29
1.6 i	3A2/2/3/5, 3A5/2/3/5	E	1598	AFT, AEK	A			10/94 ▸ 12/96	867959481	**820034**	84		95		22X1.5	29
1.6 i	3A2/2/3/5, 3A5/2/3/5	E	1598	AFT, AEK	A			10/94 ▸ 12/96	1H0959481B	**820035**	84	91	95	102	22X1.5	29
1.8 i	3A2/2/3/5, 3A5/2/3/5	E	1781	ADZ, AAM, ABS	M			10/93 ▸ 12/96	867959481	**820034**	84		95		22X1.5	29
1.8 i	3A2/2/3/5, 3A5/2/3/5	E	1781	ADZ, ABS, AAM	M			10/93 ▸ 12/96	1H0959481B	**820035**	84	91	95	102	22X1.5	29
1.8 i	3A2/2/3/5, 3A5/2/3/5	E	1781	ABS, ADZ	A			10/93 ▸ 12/96	1H0959481B	**820035**	84	91	95	102	22X1.5	29
1.8 i	3A2/2/3/5, 3A5/2/3/5	E	1781	ADZ, ABS	A			10/93 ▸ 12/96	867959481	**820034**	84		95		22X1.5	29
2.0 i,2.0 i 16V	3A2/2/3/5, 3A5/2/3/5	E	1984	2E, AGG, ADY, ABF, AEP, ACX	M			10/93 ▸ 05/97	1H0959481B	**820035**	84	91	95	102	22X1.5	29
2.0 i,2.0 i 16V	3A2/2/3/5, 3A5/2/3/5	E	1984	AEP, ADY, 2E, ABF, AGG, ACX	M			10/93 ▸ 05/97	867959481	**820034**	84		95		22X1.5	29
2.0 i	3A2/2/3/5, 3A5/2/3/5	E	1984	AEP, ADY, 2E, AGG, ACX	A			10/93 ▸ 12/96	867959481	**820034**	84		95		22X1.5	29
2.0 i	3A2/2/3/5, 3A5/2/3/5	E	1984	AGG, ADY, AEP, 2E, ACX	A			10/93 ▸ 12/96	1H0959481B	**820035**	84	91	95	102	22X1.5	29
2.8 i VR6	3A2/3/6, 3A5/3/6	E	2792	AAA	M			10/93 ▸ 12/96	867959481	**820034**	84		95		22X1.5	29
2.8 i VR6	3A2/3/6, 3A5/3/6	E	2792	AAA	M			10/93 ▸ 12/96	1H0959481B	**820035**	84	91	95	102	22X1.5	29
2.8 i VR6	3A2/3/6, 3A5/3/6	E	2792	AAA	A			10/93 ▸ 12/96	867959481	**820034**	84		95		22X1.5	29
2.8 i VR6	3A2/3/6, 3A5/3/6	E	2792	AAA	A			10/93 ▸ 12/96	1H0959481B	**820035**	84	91	95	102	22X1.5	29
2.9 i VR6	3A56	E	2861	ABV	M			01/94 ▸ 05/97	1H0959481B	**820035**	84	91	95	102	22X1.5	29
2.9 i VR6	3A56	E	2861	ABV	M			01/94 ▸ 05/97	867959481	**820034**	84		95		22X1.5	29
1.9 TD,1.9 TDi	3A2/2/3/5/A, 3A5/2/3/5	D	1896	AFN, 1Z, AAZ, AHU	M			10/93 ▸ 12/96	867959481	**820034**	84		95		22X1.5	29
1.9 TD,1.9 TDi	3A2/2/3/5/A, 3A5/2/3/5	D	1896	1Z, AAZ, AHU, AFN	M			10/93 ▸ 12/96	1H0959481B	**820035**	84	91	95	102	22X1.5	29
1.9 TDi	3A2/2/3/5/A, 3A5/2/3/5/A	D	1896	AFN, AHU, 1Z	A			10/93 ▸ 12/96	867959481	**820034**	84		95		22X1.5	29
1.9 TDi	3A2/2/3/5/A, 3A5/2/3/5/A	D	1896	AHU, 1Z, AFN	A			10/93 ▸ 12/96	1H0959481B	**820035**	84	91	95	102	22X1.5	29

Passat (96>2000)

1.6 i	3B2/3/A, 3B5/3/A	E	1595	AHL, ADP, ANA, ARM	M			10/96 ▸	191959481C	**819769**	84	91	95	102	22X1.5	29
1.6 i	3B2/3/A, 3B5/3/A	E	1595	ARM, ADP, AHL, ANA	M			10/96 ▸	893959481	**820304**	90		95		22X1.5	29
1.6 i	3B53, 3B2/3/A	E	1595	ADP, AHL, ARM, ANA	A			10/96 ▸	191959481C	**819769**	84	91	95	102	22X1.5	29
1.6 i	3B53, 3B2/3/A	E	1595	AHL, ARM, ADP, ANA	A			10/96 ▸	893959481	**820304**	90		95		22X1.5	29
1.8 i,1.8 i 20V 1.8 i Turbo 20V	3B2/3/A, 3B5/3/A	E	1781	ADR, ARG, AEB, APT, ANB, AFY APU	M			10/96 ▸	893959481	**820304**	90		95		22X1.5	29
1.8 i,1.8 i 20V 1.8 i Turbo 20V	3B2/3/A, 3B5/3/A	E	1781	AEB, ADR, APT, APU, AFY, ARG ANB	M			10/96 ▸	191959481C	**819769**	84	91	95	102	22X1.5	29
1.8 i,1.8 i 20V 1.8 i Turbo 20V	3B53, 3B2/3/A	E	1781	AEB, APT, ANB, ADR, AFY, APU ARG	A			10/96 ▸	191959481C	**819769**	84	91	95	102	22X1.5	29
1.8 i,1.8 i 20V 1.8 i Turbo 20V	3B53, 3B2/3/A	E	1781	ADR, APT, ARG, APU, AEB, AFY ANB	A			10/96 ▸	893959481	**820304**	90		95		22X1.5	29
2.3 i VR5 20V	3B23, 3B53	E	2324	AGZ	M			10/96 ▸	893959481	**820304**	90		95		22X1.5	29
2.3 i VR5 20V	3B23, 3B53	E	2324	AGZ	M			10/96 ▸	191959481C	**819769**	84	91	95	102	22X1.5	29
2.3 i VR5 20V	3B23, 3B53	E	2324	AGZ	A			10/96 ▸	191959481C	**819769**	84	91	95	102	22X1.5	29
2.3 i VR5 20V	3B23, 3B53	E	2324	AGZ	A			10/96 ▸	893959481	**820304**	90		95		22X1.5	29
2.8 i V6 30V	3B2/6/B, 3B5/6/B	E	2771	AQD, ACK, APR, ATX, ALG, AGE	M			01/97 ▸	191959481C	**819769**	84	91	95	102	22X1.5	29
2.8 i V6 30V	3B2/6/B, 3B5/6/B	E	2771	AQD, APR, AGE, ACK, ALG, ATX	M			01/97 ▸	893959481	**820304**	90		95		22X1.5	29
2.8 i V6 30V	3B2/6/B, 3B5/6/B	E	2771	ACK, APR, ALG, AQD, ATX, AGE	A			05/97 ▸	191959481C	**819769**	84	91	95	102	22X1.5	29
2.8 i V6 30V	3B2/6/B, 3B5/6/B	E	2771	APR, AQD, ACK, AGE, ALG, ATX	A			05/97 ▸	893959481	**820304**	90		95		22X1.5	29
1.9 TDi	3B2/3/A, 3B5/3/A	D	1896	AJM, AFN, ATJ, AVG, AHU, AHH AVB	M			10/96 ▸	893959481	**820304**	90		95		22X1.5	29
1.9 TDi	3B2/3/A, 3B5/3/A	D	1896	AFN, ATJ, AJM, AHU, AHH, AVG AVB	M			10/96 ▸	191959481C	**819769**	84	91	95	102	22X1.5	29
1.9 TDi	3B23, 3B53	D	1896	AVG, AFN, AJM, AHU, AHH, ATJ	A			10/96 ▸	893959481	**820304**	90		95		22X1.5	29
1.9 TDi	3B23, 3B53	D	1896	AHH, AVG, AFN, ATJ, AHU, AJM	A			10/96 ▸	191959481C	**819769**	84	91	95	102	22X1.5	29
2.5 TDi V6	3B26, 3B56	D	2496	AFB, AKN	M	+/-		08/99 ▸	893959481	**820304**	90		95		22X1.5	29
2.5 TDi V6	3B26, 3B56	D	2496	AFB, AKN	M			08/99 ▸	191959481C	**819769**	84	91	95	102	22X1.5	29
2.5 TDi V6	3B26, 3B56	D	2496	AFB	M			08/99 ▸	8D0959481B	**820305**	90	97	95	102	2	
2.5 TDi V6	3B26, 3B56	D	2496	AFB, AKN	A	+/-		08/98 ▸	893959481	**820304**	90		95		22X1.5	29
2.5 TDi V6	3B26, 3B56	D	2496	AFB	A			08/98 ▸	8D0959481B	**820305**	90	97	95	102	2	

• **New** Nouveau **Nuevo** Novo **Nuovo** Nieuw **Neu** Yeni Новый Nou

		Type Ctr.		cc		AC			OE	Valeo	(°)C T1	T2	T3	T4	COD.	mm
VOLKSWAGEN (.../...)																		
Passat (96>2000) (.../...)																		
2.5 TDi V6	*3B2, 3B5*	D	2496	AFB, AKN	A			08/98 ▸	191959481C	**819769**	84	91	95	102	22X1.5	29
Passat (2000>)																		
1.6 i	*3B3/0/1/2, 3B6/0/1/2*	E	1595	ALZ	M			10/00 ▸	8D0959481B	**820305**	90	97	95	102	2	
1.8 i Turbo 20V	*3B3/0/1/2/3/4, 3B6/0/1/2/3/4*	E	1781	AWT	M			10/00 ▸	8D0959481B	**820305**	90	97	95	102	2	
1.8 i Turbo 20V	*3B3/0/1/2/3/4/6, 3B6/0/1/2/3/4/6*	E	1781	AWT, AWM	A			10/00 ▸	8D0959481B	**820305**	90	97	95	102	2	
2.0 i,2.0 i 20V	*3B3/0/1/2/3, 3B6/0/1/2/3*	E	1984	AZM, ALT	M			10/00 ▸	8D0959481B	**820305**	90	97	95	102	2	
2.0 i,2.0 i 20V	*3B3/0/1/2/3, 3B6/0/1/2/3*	E	1984	AZM, ALT	A			10/00 ▸	8D0959481B	**820305**	90	97	95	102	2	
2.3 i V5	*3B3/1/2/3, 3B6/1/2/3*	E	2324	AZX	M			01/01 ▸	8D0959481B	**820305**	90	97	95	102	2	
2.3 i V5	*3B3/1/2/3, 3B6/1/2/3*	E	2324	AZX	A			01/01 ▸	8D0959481B	**820305**	90	97	95	102	2	
2.8 i V6	*3B3/1/2/3, 3B6/0/1/2/3*	E	2771	ATQ, AMX, BBG	M			10/00 ▸	8D0959481B	**820305**	90	97	95	102	2	
2.8 i V6	*3B3/1/2/3/4/5, 3B6/1/2/3/4/5*	E	2771	ATQ, BBG, AMX	A			10/00 ▸	8D0959481B	**820305**	90	97	95	102	2	
4.0 i W8	*3B3/7/8, 3B6/7/8*	E	3999	BDN	M			09/01 ▸	8D0959481B	**820305**	90	97	95	102	2	
4.0 i W8	*3B3/7/8, 3B6/7/8*	E	3999	BDN, BDP	A			09/01 ▸	8D0959481B	**820305**	90	97	95	102	2	
1.9 TDi	*3B3/0/1/2/3, 3B6/0/1/2/3*	D	1896	AWX, AVF, AVB	M			10/00 ▸	8D0959481B	**820305**	90	97	95	102	2	
1.9 TDi	*3B3/0/1/2/3, 3B6/0/1/2/3*	D	1896	AVF, AVB	A			10/00 ▸	8D0959481B	**820305**	90	97	95	102	2	
2.0 TDi	*3B3/0/1/2/3, 3B6/0/1/2/3*	D	1968	BGW	M			11/03 ▸	8D0959481B	**820305**	90	97	95	102	2	
2.5 TDi,2.5 TDi V6	*3B3/1/2/3, 3B6/1/2/3*	D	2496	BDG, BDH, AKN	M			10/00 ▸	8D0959481B	**820305**	90	97	95	102	2	
2.5 TDi,2.5 TDi V6	*3B3/1/2/3, 3B6/1/2/3*	D	2496	BAU, AKN, BDG	A			10/00 ▸	8D0959481B	**820305**	90	97	95	102	2	
Phaeton Phase I (2002>2007)																		
6.0 i W12 48V	*3D2/5/6, 3D8/5/6*	E	5998	BAN	A			05/02 ▸ 05/05	1J0959481A	•**820831**	85		90		22X1.5	29
Polo (74>81)																		
0.8	*8610*	E	800	HE	M			01/76 ▸ 07/78	055919369C	**819760**	86		95		22X1.5	29
0.9	*8610*	E	895	HA	M			04/75 ▸ 09/81	055919369C	**819760**	86		95		22X1.5	29
0.9	*8610*	E	895	HA	M			07/78 ▸ 09/81	191959481C	**819769**	84	91	95	102	22X1.5	29
1.1	*8610*	E	1093	HC	M			04/75 ▸ 07/77	191959481B	**819743**	84		94		22X1.5	29
1.1	*8610*	E	1093	HB, HD, HC	M			04/75 ▸ 07/81	055919369C	**819760**	86		95		22X1.5	29
1.1	*8610*	E	1093	HB, HC	M			04/75 ▸ 07/81	191959481C	**819769**	84	91	95	102	22X1.5	29
1.3	*8610*	E	1272	HH, HJ	M			01/77 ▸ 09/81	191959481C	**819769**	84	91	95	102	22X1.5	29
1.3	*8610*	E	1272	HJ, HH	M			01/77 ▸ 07/81	055919369C	**819760**	86		95		22X1.5	29
Polo (81>86)																		
1.05	*867/0, 8730, 871/0/1*	E	1043	GL, HZ	M			10/81 ▸ 10/90	055919369C	**819760**	86		95		22X1.5	29
1.1	*8711, 8730, 867/0*	E	1093	HB	M			10/81 ▸ 07/83	055919369C	**819760**	86		95		22X1.5	29
1.3	*867/0/1, 871/0/1, 873/0/1*	E	1272	MH, HW, HH, HK, GT, HJ	M			10/81 ▸ 07/86	055919369C	**819760**	86		95		22X1.5	29
1.3	*8713*	E	1272	GK	M			09/82 ▸ 07/86	035919369C	**819743**	84		94		22X1.5	29
Polo (86>90)																		
1.05	*801/0/1/2/5/6, 802/1/2, 803/1/2/6*	E	1043	HZ, AAK, GL	M			08/86 ▸ 10/90	055919369C	**819760**	86		95		22X1.5	29
1.3	*801/1/2/5/6, 802/1/2, 803/1/2/5/6*	E	1272	MH, GT	M			08/86 ▸ 10/90	055919369C	**819760**	86		95		22X1.5	29
1.3	*801/0/1/2/5/6, 802/1/2, 803/1/2/5/6*	E	1272	NZ, NU, 3F, 2G, GK, PY	M			08/86 ▸ 10/90	035919369C	**819743**	84		94		22X1.5	29
Polo (90>94)																		
1.3,1.3 i	*8022, 801/5, 803/5/6*	E	1272	PYK, 3F, AAV, NZ	M			10/90 ▸ 10/94	191959481C	**819769**	84	91	95	102	22X1.5	29
Polo (94>99)																		
1.0 i	*6N10*	E	1043	AEV	M			10/94 ▸ 06/96	867959481	**820034**	84		95		22X1.5	29
1.0 i	*6N10*	E	1043	AEV	M			10/94 ▸ 06/96	1H0959481B	**820035**	84	91	95	102	22X1.5	29
1.3 i	*6N10*	E	1296	ADX	M			10/94 ▸ 04/97	1H0959481B	**820035**	84	91	95	102	22X1.5	29
1.3 i	*6N10*	E	1296	ADX	M			10/94 ▸ 04/97	867959481	**820034**	84		95		22X1.5	29
1.4 i,1.4 i 16V	*6V20, 6V50, 6N1/0*	E	1390	AEX, AFH, AKV, APQ, ANX	M	+/-		07/95 ▸ 12/99	1H0959481B	**820035**	84	91	95	102	22X1.5	29
1.4 i,1.4 i 16V	*6V20, 6V50, 6N1/0*	E	1390	APQ, AEX, AKV, ANX, AFH	M			07/95 ▸ 12/99	867959481	**820034**	84		95		22X1.5	29
1.4 i	*6N10*	E	1390	AEX, AKV, APQ, ANX	A	+/-		10/95 ▸ 12/99	1H0959481B	**820035**	84	91	95	102	22X1.5	29
1.4 i	*6N10*	E	1390	ANX, AEX, AKV, APQ	A			10/95 ▸ 12/99	867959481	**820034**	84		95		22X1.5	29
1.6 i	*6V20*	E	1595	1F	M			05/96 ▸ 09/97	1H0959481B	**820035**	84	91	95	102	22X1.5	29
1.6 i	*6V20*	E	1595	1F	M			05/96 ▸ 09/97	867959481	**820034**	84		95		22X1.5	29
1.6 i,1.6 i 16V	*6V20, 6V50, 6N1/0*	E	1598	AEA, AFT, AEE, ALM, AJV	M	+/-		10/94 ▸ 12/99	1H0959481B	**820035**	84	91	95	102	22X1.5	29
1.6 i,1.6 i 16V	*6V20, 6V50, 6N1/0*	E	1598	AEE, AFT, AEA, AJV, ALM	M			10/94 ▸ 12/99	867959481	**820034**	84		95		22X1.5	29
1.6 i	*6V20, 6V50, 6N1/0*	E	1598	AEE, AFT, AHS	A	+/-		09/95 ▸ 12/99	1H0959481B	**820035**	84	91	95	102	22X1.5	29

• **New** Nouveau **Nuevo** Novo **Nuovo** Nieuw **Neu** Yeni Новый Nou

VOLKSWAGEN (.../...)

Polo (94>99) (.../...)

1.6 i	6V20, 6V50, 6N1/0	E	1598	AFT, AEE, AHS	A			09/95 ▸ 12/99	867959481	**820034**	84		95		22X1.5	29
1.8 i	6V20	E	1781	ADD	M			03/98 ▸ 08/99	1H0959481B	**820035**	84	91	95	102	22X1.5	29
1.8 i	6V20	E	1781	ADD	M			03/98 ▸ 08/99	867959481	**820034**	84		95		22X1.5	29
2.0 i	6V20	E	1984	ADC	M			08/99 ▸ 08/99	867959481	**820034**	84		95		22X1.5	29
2.0 i	6V20	E	1984	ADC	M			08/99 ▸ 08/99	1H0959481B	**820035**	84	91	95	102	22X1.5	29
2.0 i	6V20	E	1984	ADC	A			08/99 ▸ 08/99	1H0959481B	**820035**	84	91	95	102	22X1.5	29
2.0 i	6V20	E	1984	ADC	A			08/99 ▸ 08/99	867959481	**820034**	84		95		22X1.5	29
1.0 i	6N10	E	999	AER, ALL	M			07/96 ▸ 12/99	867959481	**820034**	84		95		22X1.5	29
1.0 i	6N10	E	999	ALL, AER	M			07/96 ▸ 12/99	1H0959481B	**820035**	84	91	95	102	22X1.5	29
1.7 SDI	6V20, 6V50, 6N1/0	D	1716	AKU, AHG, AKW	M			04/97 ▸ 12/99	1H0959481B	**820035**	84	91	95	102	22X1.5	29
1.7 SDI	6V20, 6V50, 6N1/0	D	1716	AKU, AHG, AKW	M			04/97 ▸ 12/99	867959481	**820034**	84		95		22X1.5	29
1.9 D,1.9 SDI,1.9 TDi	6V20, 6V50, 6N1/0	D	1896	AEF, AFN, ALE, AHU, AGD, 1Y AEY	M	+/-		01/95 ▸ 12/99	1H0959481B	**820035**	84	91	95	102	22X1.5	29
1.9 D,1.9 SDi,1.9 TDi	6V20, 6V50, 6N1/0	D	1896	AEY, AHU, AGD, AEF, ALE, AFN 1Y	M			01/95 ▸ 12/99	867959481	**820034**	84		95		22X1.5	29

Polo (99>2001)

1.0 i	6N2/0/1/2/3	E	999	ALD, AUC	M	+/-		10/99 ▸	1H0959481B	**820035**	84	91	95	102	22X1.5	29
1.0 i	6N2/0/1/2/3	E	999	ALD, AUC	M			10/99 ▸	867959481	**820034**	84		95		22X1.5	29
1.4 i,1.4 i 16V	6V20, 6V50, 6N2/0/1/2/3/6	E	1390	AHW, AFK, AUD, AKP, AUB, AUA AKK	M	+/-		10/99 ▸	867959481	**820034**	84		95		22X1.5	29
1.4 i,1.4 i 16V	6V20, 6V50, 6N2/0/1/2/3/6	E	1390	AKK, AHW, AKP, AUB, AFK, AUA AUD, APE, ANW	M			10/99 ▸	1H0959481B	**820035**	84	91	95	102	22X1.5	29
1.4 i,1.4 i 16V	6N2/0/1/2/3	E	1390	AUD, AKK, AUA, AHW	A	+/-		10/99 ▸	867959481	**820034**	84		95		22X1.5	29
1.4 i,1.4 i 16V	6N2/0/1/2/3	E	1390	AKK, AUA, AHW, AUD	A	+/-		10/99 ▸	1H0959481B	**820035**	84	91	95	102	22X1.5	29
1.6 i	6V20, 6V50	E	1595	APF	M			03/00 ▸ 10/00	867959481	**820034**	84		95		22X1.5	29
1.6 i	6V20, 6V50	E	1595	AKL	M			10/99 ▸	1H0959481B	**820035**	84	91	95	102	22X1.5	29
1.6 i	6V50	E	1595	AEH	A			10/99 ▸ 09/01	867959481	**820034**	84		95		22X1.5	29
1.6 i	6V20	E	1595	AEH	A			10/99 ▸	1H0959481B	**820035**	84	91	95	102	22X1.5	29
1.6 i,1.6 i 16V	6V20, 6V50, 6N2/0/6	E	1598	ARC, ALM, AUR, AVY	M	+/-		10/99 ▸	1H0959481B	**820035**	84	91	95	102	22X1.5	29
1.6 i 16V	6N2/0/6	E	1598	ARC, AVY	M	+/-		11/99 ▸	867959481	**820034**	84		95		22X1.5	29
1.8 i	6V20	E	1781	ADD	M			03/00 ▸ 09/01	867959481	**820034**	84		95		22X1.5	29
2.0 i	6V20	E	1984	ADC	M			06/00 ▸ 09/01	867959481	**820034**	84		95		22X1.5	29
2.0 i	6V20	E	1984	ADC	A			06/00 ▸ 09/01	867959481	**820034**	84		95		22X1.5	29
1.4 TDi	6N20	D	1422	ATL, AMF	M			01/00 ▸	1H0959481B	**820035**	84	91	95	102	22X1.5	29
1.4 TDi	6N20	D	1422	ATL	M			01/00 ▸ 04/00	867959481	**820034**	84		95		22X1.5	29
1.4 TDi	6N20	D	1422	AMF	M	+/-		10/99 ▸ 09/01	6X0959481	**820302**	90		95		22X1.5	29
1.7 SDi	6N20	D	1716	AKU	M	+/-		10/99 ▸	867959481	**820034**	84		95		22X1.5	29
1.7 SDi	6N20	D	1716	AKU	M			10/99 ▸	1H0959481B	**820035**	84	91	95	102	22X1.5	29
1.9 D,1.9 SDi,1.9 TDi	6V20, 6V50, 6N2/0/1/2/3	D	1896	AGD, AEF, AQM, ASX, AGR, ALH ASV, AGP	M	+/-		10/99 ▸	1H0959481B	**820035**	84	91	95	102	22X1.5	29
1.9 D,1.9 SDi	6N2/0/1/2/3	D	1896	AEF, ASX, AGD	M			10/99 ▸	867959481	**820034**	84		95		22X1.5	29

Polo (2001>)

1.0 i	9A21	E	999	ARA	M			03/03 ▸ 09/03	1J0959481A	**●820831**	85		90		22X1.5	29
1.0 i	9A21	E	999	ARA	M			03/03 ▸ 09/03	1J0959481	**820302**	90		95		22X1.5	29
1.2 i,1.2 i 12V,1.2 i 6V	9N1/0/1/2/3/5	E	1198	AWY,AZQ,BMD,BME	M			11/01 ▸ 05/05	1J0959481	**820302**	90		95		22X1.5	29
1.4 i 16V	9A2/2/4, 9N1/0/1/2/3, 9N2 0/1	E	1390	BBY,BKY	A			11/01 ▸	1J0959481A	**●820831**	85		90		22X1.5	29
1.4 16V,1.4 FSI 16V 1.4 i 16V ▸ 9N-4-034 000	9N1/0/1/2/3/5, 9N2/0/1	E	1390	AUA,AUB,AXU,BBY,BBZ,BKY	M			11/01 ▸	1J0959481A	**●820831**	85		90		22X1.5	29
1.4 16V,1.4 i 16V	9N1/0/1/2/3/5, 9N2/0/1	E	1390	AUA,AUB,BBY,BBZ,BKY	M			11/01 ▸	1J0959481	**820302**	90		95		22X1.5	29
1.4 i 16V	9A2/2/4, 9N1/0/1/2/3, 9N2 0/1	E	1390	BBY,BKY	A			11/01 ▸ 06/05	1J0959481	**820302**	90		95		22X1.5	29
1.6 i	9A2/1/2/3	E	1595	BPA	M			10/04 ▸	1J0959481A	**●820831**	85		90		22X1.5	29
1.6 i	9A2/1/2/3	E	1595	BPA	M			10/04 ▸	1J0959481	**820302**	90		95		22X1.5	29
1.6 i	9A2/1/2/3/4	E	1598	BAH	M			09/02 ▸	1J0959481A	**●820831**	85		90		22X1.5	29
1.6 i	9A2/1/2/3/4	E	1598	BAH	M			09/02 ▸ 06/05	1J0959481	**820302**	90		95		22X1.5	29
2.0 i	9A2/2/3/4	E	1984	BBX	M			09/02 ▸	1J0959481A	**●820831**	85		90		22X1.5	29
2.0 i	9A2/2/3/4	E	1984	BBX	M			09/02 ▸ 06/05	1J0959481	**820302**	90		95		22X1.5	29
1.4 TDi	9N1/0/1/2/3/5, 9N2/0/1	D	1422	AMF,BAY	M			11/01 ▸	1J0959481A	**●820831**	85		90		22X1.5	29
1.4 TDi	9N1/0/1/2/3/5, 9N2/0/1	D	1422	AMF,BAY	M			11/01 ▸ 06/05	1J0959481	**820302**	90		95		22X1.5	29

• **New** Nouveau **Nuevo** Novo **Nuovo** Nieuw **Neu** Yeni Новый Nou

		Type Ctr.		CC			AC			OE	Valeo	(°)C T1	T2	T3	T4	COD.	☼: mm	
VOLKSWAGEN (.../...)																		
Scirocco (.../...)																		
1.7	*533*	E	1716	EN	M	+		08/81 ▸ 07/83	191959481C	**819769**	84	91	95	102	22X1.5	29
1.7	*531, 533*	E	1716	EN	M			08/80 ▸ 07/83	191959481B	**819743**	84		94		22X1.5	29
1.7	*531*	E	1716	EN	A			08/80 ▸ 07/81	191959481B	**819743**	84		94		22X1.5	29
1.8,1.8 16V	*533/1/2/4*	E	1781	EX, JH, JJ, KT, DX, PL, KR	M	+		08/82 ▸ 07/90	191959481C	**819769**	84	91	95	102	22X1.5	29
1.8,1.8 16V	*533/1/2/4*	E	1781	EX, DX, PL, JH, KR, KT, JJ	M			08/82 ▸ 07/90	191959481B	**819743**	84		94		22X1.5	29
1.8	*5331*	E	1781	EX	A	+		08/83 ▸ 07/90	191959481C	**819769**	84	91	95	102	22X1.5	29
1.8	*5331*	E	1781	EX	A			08/83 ▸ 07/90	191959481B	**819743**	84		94		22X1.5	29
Sharan (95>2000)																		
1.8 i Turbo 20V	*7M8/2/3/5/9*	E	1781	AJH	M			11/97 ▸ 02/00	1H0959481B	**820035**	84	91	95	102	22X1.5	29
1.8 i Turbo 20V	*7M8/2/3/5/9*	E	1781	AJH	A			11/97 ▸ 02/00	1H0959481B	**820035**	84	91	95	102	22X1.5	29
2.0 i	*7M8/2/3/5/9*	E	1984	ADY	M			09/95 ▸ 02/00	1H0959481B	**820035**	84	91	95	102	22X1.5	29
2.0 i	*7M8/2/3/5/9*	E	1984	ADY	A			09/95 ▸ 02/00	1H0959481B	**820035**	84	91	95	102	22X1.5	29
2.8 i VR6	*7M8/3/5/9*	E	2792	AAA, AMY	M			09/95 ▸ 02/00	1H0959481B	**820035**	84	91	95	102	22X1.5	29
2.8 i VR6	*7M8/3/5/9*	E	2792	AAA, AMY	A			09/95 ▸ 02/00	1H0959481B	**820035**	84	91	95	102	22X1.5	29
1.9 TDi	*7M8/2/3/5/9*	D	1896	AHU, AFN, AVG, ANU, 1Z	M			09/95 ▸ 02/00	1H0959481B	**820035**	84	91	95	102	22X1.5	29
1.9 TDi	*7M8/2/3/5/9*	D	1896	AVG, AFN	A			12/96 ▸ 02/00	1H0959481B	**820035**	84	91	95	102	22X1.5	29
Sharan (2000>2003)																		
1.8 i Turbo 20V	*7M9/2/3/5/9*	E	1781	AWC	M			04/00 ▸	1H0959481B	**820035**	84	91	95	102	22X1.5	29
1.8 i Turbo 20V	*7M9/2/3/5/9*	E	1781	AWC	A			04/00 ▸	1H0959481B	**820035**	84	91	95	102	22X1.5	29
2.0 i	*7M9/2/3/5/9*	E	1984	ATM	M			04/00 ▸	1H0959481B	**820035**	84	91	95	102	22X1.5	29
2.0 i	*7M9/2/3/5/9*	E	1984	ATM	A			04/00 ▸	1H0959481B	**820035**	84	91	95	102	22X1.5	29
2.8 i V6	*7M9/2/3/5/9*	E	2792	AYL	M			04/00 ▸ 05/03	1H0959481B	**820035**	84	91	95	102	22X1.5	29
2.8 i V6,2.8 i VR6	*7M9/2/3/5/9*	E	2792	AYL	A			04/00 ▸	1H0959481B	**820035**	84	91	95	102	22X1.5	29
1.9 TDi	*7M9/2/3/5/9*	D	1896	AUY, ASZ, ANU	M			04/00 ▸	1H0959481B	**820035**	84	91	95	102	22X1.5	29
1.9 TDi	*7M9/2/3/5/9*	D	1896	AUY	A			10/00 ▸	1H0959481B	**820035**	84	91	95	102	22X1.5	29
Sharan (2003>)																		
1.8 i Turbo 20V	*7M6/0/1/2/3/S/T*	E	1781	AWC	M			06/03 ▸	1H0959481B	**820035**	84	91	95	102	22X1.5	29
1.8 i Turbo 20V	*7M6/0/1/2/3/S/T*	E	1781	AWC	A			06/03 ▸	1H0959481B	**820035**	84	91	95	102	22X1.5	29
2.0 i	*7M6/0/1/2/3/S/T*	E	1984	ATM	M			06/03 ▸	1H0959481B	**820035**	84	91	95	102	22X1.5	29
2.0 i	*7M6/0/1/2/3/S/T*	E	1984	ATM	A			06/03 ▸	1H0959481B	**820035**	84	91	95	102	22X1.5	29
2.8 i VR6	*7M6/0/1/2/3/S/T*	E	2792	AYL	M			06/03 ▸	1H0959481B	**820035**	84	91	95	102	22X1.5	29
2.8 i VR6	*7M6/0/1/2/3/S/T*	E	2792	AYL	A			06/03 ▸	1H0959481B	**820035**	84	91	95	102	22X1.5	29
1.9 TDi	*7M6/0/1/2/3/S/T*	D	1896	ASZ, AUY, BTB, ANU	M			06/03 ▸	1H0959481B	**820035**	84	91	95	102	22X1.5	29
1.9 TDi	*7M6/0/1/2/3/S*	D	1896	AUY	A			06/03 ▸	1H0959481B	**820035**	84	91	95	102	22X1.5	29
Touareg (2002>2006)																		
4.2 i V8 40V	*7LA/A/B/C/D*	E	4172	AXQ	A			12/02 ▸ 11/06	1J0959481A	●**820831**	85		90		22X1.5	29
6.0 i W12 48V	*7LA/A/F*	E	5998	BJN	A			08/04 ▸ 11/06	1J0959481A	●**820831**	85		90		22X1.5	29
Touareg (2006>)																		
6.0 i W12 48V	*7L60*	E	5998	BJN	A			12/06 ▸	1J0959481A	●**820831**	85		90		22X1.5	29
Touran (2003>2006)																		
[1]Touran (2006>)																		
1.6 FSi	*1T2A*	E	1598	BLF	M	-		11/06 ▸ 01/07	1J0959481A	●**820831**	85		90		22X1.5	29
1.6 FSi	*1T2H*	E	1598	BLF	A	-		11/06 ▸	1J0959481A	●**820831**	85		90		22X1.5	29
2.0 i	*1T2/C/H/T*	F	1984	BSX	M	-		11/06 ▸	1J0959481A	●**820831**	85		90		22X1.5	29
UP																		
1.0 Sre 60,1.0 Sre 75	*121/2/3*	E	999	CHYA,CHYB	M			08/11 ▸	1J0959481	**820302**	90		95		22X1.5	29
Vento																		
1.4 i	*1H2/2/3/B*	E	1390	AEX	M			07/95 ▸ 12/97	867959481	**820034**	84		95		22X1.5	29

• **New** Nouveau **Nuevo** Novo **Nuovo** Nieuw **Neu** Yeni Новый Nou

		Type Ctr.		cc			AC			OE	Valeo	(°)C T1	T2	T3	T4	COD.	mm	
VOLKSWAGEN (.../...)																				
Vento (.../...)																				
1.4 i	*1H2/2/3*	E	1391	ABD	M			11/91 ▸ 07/93	191959481B	**819743**	84		94		22X1.5	29				
1.4 i	*1H2/2/3*	E	1391	ABD	M			11/91 ▸ 07/93	191959481C	**819769**	84	91	95	102	22X1.5	29				
1.4 i	*1H2/2/3*	E	1391	ABD	M			08/93 ▸ 07/95	867959481	**820034**	84		95		22X1.5	29				
1.6 i	*1H2/2/3*	E	1598	ABU	M			07/92 ▸ 07/93	191959481C	**819769**	84	91	95	102	22X1.5	29				
1.6 i	*1H2/2/3*	E	1598	ABU	M			07/92 ▸ 07/93	191959481B	**819743**	84		94		22X1.5	29				
1.6 i	*1H2/2/3/4/5/B*	E	1598	AFT, ABU, AEA, AKS, AEE, AEK	M			08/93 ▸ 12/97	867959481	**820034**	84		95		22X1.5	29				
1.6 i	*1H2/2/3/4/B*	E	1598	AFT, AEK	A			10/94 ▸ 12/97	867959481	**820034**	84		95		22X1.5	29				
1.6 i	*1H22*	E	1598	AEK	A			10/94 ▸ 12/95	1H0959481B	**820035**	84	91	95	102	22X1.5	29				
1.8 i	*1H2/2/3/5*	E	1781	ABS, AAM	M			11/91 ▸ 07/93	191959481B	**819743**	84		94		22X1.5	29				
1.8 i	*1H2/2/3/5*	E	1781	AAM, ABS	M			11/91 ▸ 07/93	191959481C	**819769**	84	91	95	102	22X1.5	29				
1.8 i	*1H33, 1H2/2/3/4/5*	E	1781	ABS, ADZ, AAM	M			08/93 ▸ 12/97	867959481	**820034**	84		95		22X1.5	29				
1.8 i	*1H2/2/3*	E	1781	AAM, ABS	A			01/92 ▸ 07/93	191959481B	**819743**	84		94		22X1.5	29				
1.8 i	*1H2/2/3*	E	1781	AAM, ABS	A			01/92 ▸ 07/93	191959481C	**819769**	84	91	95	102	22X1.5	29				
1.8 i	*1H2/2/3/4*	E	1781	ABS, AAM, ADZ	A			08/93 ▸ 12/97	867959481	**820034**	84		95		22X1.5	29				
2.0 E	*1H2/2/3/5*	E	1984	2E	M			11/91 ▸ 07/93	191959481B	**819743**	84		94		22X1.5	29				
2.0 E	*1H2/2/3/5*	E	1984	2E	M			11/91 ▸ 07/93	191959481C	**819769**	84	91	95	102	22X1.5	29				
1.9 D,1.9 TD	*1H2/2/3/5*	D	1896	1Y, AAZ	M			11/91 ▸ 07/93	191959481B	**819743**	84		94		22X1.5	29				
1.9 D,1.9 TD	*1H2/2/3/5*	D	1896	AAZ, 1Y	M			11/91 ▸ 07/93	191959481C	**819769**	84	91	95	102	22X1.5	29				
1.9 D,1.9 SDi,1.9 TD 1.9 TDi	*1H2/2/3/4/5/B*	D	1896	AHU, AAZ, AFN, 1Z, 1Y, ALE AEY	M			08/93 ▸ 12/97	867959481	**820034**	84		95		22X1.5	29				
1.9 TD	*1H2/2/3*	D	1896	AAZ	A			01/92 ▸ 07/93	191959481B	**819743**	84		94		22X1.5	29				
1.9 TD	*1H2/2/3*	D	1896	AAZ	A			01/92 ▸ 07/93	191959481C	**819769**	84	91	95	102	22X1.5	29				
1.9 TDi	*1H2/2/3/4/B*	D	1896	AHU, AFN, 1Z	A			09/93 ▸ 12/97	867959481	**820034**	84		95		22X1.5	29				
2.0 E	*1H2/2/3/4/5*	E	1984	AKR, ADY, 2E, AGG, AEP	M			08/93 ▸ 12/97	867959481	**820034**	84		95		22X1.5	29				
2.0 E	*1H2/2/3*	E	1984	2E	A			11/91 ▸ 07/93	191959481B	**819743**	84		94		22X1.5	29				
2.0 E	*1H2/2/3*	E	1984	2E	A			11/91 ▸ 07/93	191959481C	**819769**	84	91	95	102	22X1.5	29				
2.0 E	*1H2/2/3/4*	E	1984	AGG, 2E, ADY, AEP	A			08/93 ▸ 12/97	867959481	**820034**	84		95		22X1.5	29				
2.8 i VR6	*1H25*	E	2792	AAA	M			01/92 ▸ 07/93	191959481B	**819743**	84		94		22X1.5	29				
2.8 i VR6	*1H25*	E	2792	AAA	M			01/92 ▸ 07/93	191959481C	**819769**	84	91	95	102	22X1.5	29				
2.8 i VR6	*1H2/5/7*	E	2792	AAA	M			07/93 ▸ 12/97	867959481	**820034**	84		95		22X1.5	29				
2.8 i VR6	*1H25*	E	2792	AAA	A			07/92 ▸ 07/93	191959481B	**819743**	84		94		22X1.5	29				
2.8 i VR6	*1H25*	E	2792	AAA	A			07/92 ▸ 07/93	191959481C	**819769**	84	91	95	102	22X1.5	29				
2.8 i,2.8 i VR6	*1H2/5/7*	E	2792	AAA	A			07/93 ▸ 12/97	867959481	**820034**	84		95		22X1.5	29				
VOLKSWAGEN																				
Caddy (82>92)																				
1.5	*147/0/7/8/9, 148/0/7/8/9*	E	1457	JB	M			08/82 ▸ 07/83	191959481C	**819769**	84	91	95	102	22X1.5	29				
1.5	*147/0/7/8/9, 148/0/7/8/9*	E	1457	JB	M			08/82 ▸ 07/83	191959481B	**819743**	84		94		22X1.5	29				
1.6	*147/0/7/8/9*	E	1588	EM	M			08/82 ▸ 07/83	191959481C	**819769**	84	91	95	102	22X1.5	29				
1.6	*147/0/7/8/9*	E	1588	EM	M			08/82 ▸ 07/83	191959481B	**819743**	84		94		22X1.5	29				
1.6	*147/0/7/8/9*	E	1588	EM	A			08/82 ▸ 07/83	191959481C	**819769**	84	91	95	102	22X1.5	29				
1.6	*147/0/7/8/9*	E	1588	EM	A			08/82 ▸ 07/83	191959481B	**819743**	84		94		22X1.5	29				
1.6	*147/0/7/8/9, 1AE1, 148/0/7/8/9*	E	1595	HN, EW	M			08/83 ▸ 07/92	191959481B	**819743**	84		94		22X1.5	29				
1.6	*147/0/7/8/9, 1AE1, 148/0/7/8/9*	E	1595	EW, HN	M			08/83 ▸ 07/92	191959481C	**819769**	84	91	95	102	22X1.5	29				
1.6	*147/0/7/8, 1AE1, 148/0/7/8*	E	1595	EW, HN	A			08/83 ▸ 07/92	191959481C	**819769**	84	91	95	102	22X1.5	29				
1.6	*147/0/7/8, 1AE1, 148/0/7/8*	E	1595	HN, EW	A			08/83 ▸ 07/92	191959481B	**819743**	84		94		22X1.5	29				
1.8 i	*147/0/7/8, 1AE1, 148/0/7/8*	E	1781	JH	M			08/85 ▸ 07/92	191959481B	**819743**	84		94		22X1.5	29				
1.8 i	*147/0/7/8, 1AE1, 148/0/7/8*	E	1781	JH	M			08/85 ▸ 07/92	191959481C	**819769**	84	91	95	102	22X1.5	29				
1.8 i	*147/0/7/8, 1AE1, 148/0/7/8*	E	1781	JH	A			08/85 ▸ 07/92	191959481C	**819769**	84	91	95	102	22X1.5	29				
1.8 i	*147/0/7/8, 1AE1, 148/0/7/8*	E	1781	JH	A			08/85 ▸ 07/92	191959481B	**819743**	84		94		22X1.5	29				
1.6 D	*147/0/7/8/9, 1AE1, 148/0/7/8/9*	D	1588	JK, ME	M			08/82 ▸ 07/92	191959481B	**819743**	84		94		22X1.5	29				
1.6 D	*147/0/7/8/9, 1AE1, 148/0/7/8/9*	D	1588	JK, ME	M			08/82 ▸ 07/92	191959481C	**819769**	84	91	95	102	22X1.5	29				
Caddy (95>2004)																				
1.4 i,1.4 i 16V	*9K9/A/B*	E	1390	AEX, APQ, AUA, AKV, AUD	M			11/95 ▸ 06/03	1H0959481B	**820035**	84	91	95	102	22X1.5	29				
1.6 i	*9K9/A/B*	E	1595	1F	M			11/95 ▸ 05/97	1H0959481B	**820035**	84	91	95	102	22X1.5	29				
1.6 i	*9K9/A/B*	E	1598	AEE	M			06/97 ▸ 09/00	1H0959481B	**820035**	84	91	95	102	22X1.5	29				
1.7 SDi	*9K9/A/B*	D	1716	AHB	M			07/96 ▸ 09/00	1H0959481B	**820035**	84	91	95	102	22X1.5	29				
1.9 D,1.9 SDi,1.9 TDi	*9K9/A/B*	D	1896	AYQ, ALH, AEY, AHU, 1Y, ALE	M			11/95 ▸ 06/03	1H0959481B	**820035**	84	91	95	102	22X1.5	29				
Caddy (2004>)																				
1.4 i 16V	*2KA/A/B, 2KB/C/D*	E	1390	BCA	M	-		02/04 ▸ 05/06	1J0959481A	●**820831**	85		90		22X1.5	29				

• **New** Nouveau **Nuevo** Novo **Nuovo** Nieuw **Neu** Yeni Новый Nou

VOLKSWAGEN (.../...)

Caddy (2004>) (.../...)

1.6 i	2KA/A/B, 2KB/C/D	E	1595	BGU,BSE,BSF	M	-		04/04 ▸	1J0959481A	●820831	85		90		22X1.5	29
1.9 TDi	2KAA, 2KBD	D	1896	BJB	M			02/04 ▸	1J0959481A	●820831	85		90		22X1.5	29
2.0 SDi	2KA/A/B, 2KB/C/D	D	1968	BDJ,BST	M	-		06/05 ▸	1J0959481A	●820831	85		90		22X1.5	29
2.0 SDi	2KA/A, 2KB/C/D	D	1968	BDJ	M			02/04 ▸	1J0959481A	●820831	85		90		22X1.5	29

LT (96>2003)

2.5 SDi,2.5 TDI	2DM1, 2DC0, 2DB1, 2DE0 2DD1, 2DA0, 2DF1, 2DG0 2DD2, 2DF0, 2DM2, 2DK1 2DH1, 2DG2, 2DC1, 2DF2 2DA1, 2DL1, 2DG1, 2DD0 2DH2, 2DB0, 2DE1, 2DL2	D	2460	AGX,AHD,ANJ,APA	M	+		05/96 ▸ 04/02	191919369A	●820833			120		20	
2.8 TD	2DA0, 2DL1, 2DM1, 2DG0 2DC1, 2DG2, 2DH2, 2DF1 2DA1, 2DB1, 2DK1, 2DF0 2DG1, 2DC0, 2DM2, 2DH1 2DD0, 2DD2, 2DD1, 2DL2 2DE1, 2DE0, 2DF2, 2DB0	D	2798	AGK,ATA	M	+		07/96 ▸ 01/02	191919369A	●820833			120		20	
2.8 TD,2.8 TDI	2DG2, 2DH1, 2DC0, 2DC1 2DA0, 2DD1, 2DB0, 2DL2 2DF2, 2DD2, 2DK1, 2DH2 2DF1, 2DL1, 2DE0, 2DE1 2DG0, 2DA1, 2DG1, 2DM1 2DD0, 2DF0, 2DB1	D	2799	AUH,BCQ	M	+		02/02 ▸ 05/03	191919369A	●820833			120		20	

LT (2003>)

2.8 TDi	2DC1, 2DG2, 2DC0, 2DA0 2DF1, 2DD0, 2DL2, 2DD2 2DK1, 2DL1, 2DG1, 2DF2 2DB1, 2DM2, 2DD1, 2DM1 2DH2, 2DH1, 2DF0, 2DA1 2DG0	D	2799	AUH	M	+/-		06/03 ▸ 07/06	191919369A	●820833			120		20	

Transporter (F24) (79>92)

1.9	245/0/1, 246/0/1, 247/0/3, 2510 2520, 248/0/3, 253/0/1/2/3/4/5/9 254/0/2/3/4/5/9, 255/0/1/2/3/4/5 256/0/2/3	E	1915	DF	M			08/82 ▸ 07/92	191959481B	819743	84		94		22X1.5	29
1.9 ▸ 24-F-000001 ▸	245/0/1/G/H, 246/0/1, 247/0/3/A/G/K 248/0/3, 251/0/G/H, 252/0/D, 253/0 1/2/3/4/5/9/G/H/J/K/L/M/O/S/T, 254 0/2/3/4/5/9/D/F, 255/0/1/2/3/4/5/G H/J/K/M/N/S/T, 256/0/1/2/3/4/5/E/F	E	1915	DH, GW, DG, SP	M			08/84 ▸ 07/92	251959481K	820229	79	85	87	93	22X1.5	29
1.9 ▸ 24-F-000001 ▸	245/0/1/G/H, 246/0/1, 247/0/3/G/K 248/0/3, 251/0/G, 252/0/D, 253/0/1 2/3/4/5/9/G/H/J/K/L/M, 254/0/2/3/5 9/D/F, 255/0/1/2/4/5/6/G/H/J/K/L/M N, 256/0/2/3/4/E/F	E	1915	DH, GW, DG	A			08/84 ▸ 07/92	251959481K	820229	79	85	87	93	22X1.5	29
1.9		E	1915	DF, EY	M			08/82 ▸ 07/91	191959481B	819743	84		94		22X1.5	29
1.9 ▸ 24-E-200000	245/0/1/H, 246/0/1, 247/0/3/G/K 248/0/3, 2520, 251/0/G/H, 253/0/1 2/3/4/5/9/G/H/J/K/L/M, 254/0/2/3/5 9, 255/0/1/2/3/4/5/6/G/H/J/K/L/M/T 256/0/1/2/3/4	E	1915	DH, DG, GW	M			08/82 ▸ 07/84	191959481C	819769	84	91	95	102	22X1.5	29
1.9 ▸ 24-E-200000	245/0/1/G/H, 246/0/1, 247/0/3/G/K 248/0/3, 2520, 251/0/G, 253/0/1/2 3/4/5/9/G/H/J/K/L/M, 254/0/2/3/5/9 255/0/1/2/4/5/6/G/H/J/K/L/M, 256/0 2/3/4	E	1915	DG, GW, DH	A			08/82 ▸ 07/84	191959481C	819769	84	91	95	102	22X1.5	29

• **New** Nouveau **Nuevo** Novo **Nuovo** Nieuw **Neu** Yeni Новый Nou

Valeo

Thermoswitch
Thermocontact
Termocontacto
Termocontato
Termocontatto
Thermokontakt
Thermoschalter

Włącznik wentylatora
Tepelný spínač
Termokapcsoló
Termocontact
Fan müşiri
ТЕРМОДАТЧИК

			CC			AC			OE	Valeo	(°)C T1	T2	T3	T4	COD.	mm
VOLKSWAGEN (.../...)																
Transporter (F24) (79>92) (.../...)																
2.1	245/0, 246/0/F/G, 247/0/3/A/C/G/K 248/0/A/G/K, 251/0/G, 252/0/G, 253 0/1/2/3/4/5/9/F/G/H/J/K/L/M/P/S/T 254/0/3/5/C/D/F/G/L/M, 255/0/1/2/3 4/5/6/F/G/H/J/K/L/M/N, 256/0/2/3/4 5/E/F/G/K/L	E	2109	DJ, MV	M			08/84 ▸ 07/92	251959481K	**820229**	79	85	87	93	22X1.5	29
2.1		E	2109	SS, DJ, MV, SR	M			08/85 ▸ 09/91	251959481K	**820229**	79	85	87	93	22X1.5	29
1.6 D,1.6 TD 24-F-000001 ▸	245/0/1, 246/0/1, 247/0/3 A, 2510, 2520, 248/0/3/A 253/0/1/2/3/4/5/7/9/S/T 254/0/2/3/5/9, 255/0/1/2 3/4/5/S/T, 256/0/2/3/4/5	D	1588	JX, CS	M			08/84 ▸ 07/92	251959481K	**820229**	79	85	87	93	22X1.5	29
1.6 TD	2556	D	1588	JX	A			08/84 ▸ 07/85	251959481K	**820229**	79	85	87	93	22X1.5	29
1.6 TD		D	1588	JX	M			08/84 ▸ 07/91	251959481K	**820229**	79	85	87	93	22X1.5	29
1.6 D ▸ 24-C-200000	245/0/1, 246/0/1, 247/0/3, 2510 2520, 248/0/3, 253/0/1/2/3/4/5/9 254/0/2/3/5/9, 255/0/1/3/5/T, 256 0/3	D	1588	CS	M			05/79 ▸ 07/82	191959481B	**819743**	84		94		22X1.5	29
1.6 D ▸ 24-C-200000	245/0/1, 246/0/1, 247/0/3, 2510 2520, 248/0/3, 253/0/1/2/3/4/5/9 254/0/2/3/5/9, 255/0/1/3/5/T, 256 0/3	D	1588	CS	M			05/79 ▸ 07/84	251959481	**819769**	84	91	95	102	22X1.5	29
1.8 D	245/0/1, 246/0/1, 247/0/3, 2510 2520, 248/0/3, 253/1/2/3/4/5/9 254/0/2/3/5/6, 255/0/1/2/3/5, 256 0/2/3/5	D	1715	KY	M			08/84 ▸ 07/92	251959481K	**820229**	79	85	87	93	22X1.5	29
Transporter (F70) (90>96)																
1.8	70A/1, 70B/1/C/K/M, 70E1, 70H1, 70C 2/3, 70J/1/C/K/M, 70L1, 70M1, 70K/2 3	E	1781	PD	M	+/-		09/90 ▸ 07/92	701959481	**820224**	76	82	87	93	22x1.5	29
1.8	70A/1, 70C2, 70E1, 70M1, 70B/1/C/K M	E	1781	PD	M	-		12/90 ▸ 07/92	251959481K	**820229**	79	85	87	93	22X1.5	29
2.0	70A1	E	1968	AAC	A	+		09/90 ▸ 12/95	701959481C	**820303**	75	82	80	87	22X1.5	29
2.0 ▸ 70-P-250 000	70A/1, 70C2, 70E1, 70H1, 70B/1/C/K M, 70J/1/K/M, 70L1, 70M1, 70K/2/3	E	1968	AAC	M	+/-		09/90 ▸ 07/93	251959481K	**820229**	79	85	87	93	22X1.5	29
2.0 ▸ 70-P-250 000	70A/1, 70B/C/K	E	1968	AAC	A	+/-		09/90 ▸ 07/93	251959481K	**820229**	79	85	87	93	22X1.5	29
2.0	70A/1, 70B/1/K/M/T, 70E1, 70H1, 70C 2/3, 70J/1/C/K/M/T/W, 70L1, 70M1 70K/2/3	E	1968	AAC	M	+/-		09/90 ▸ 12/95	701959481	**820224**	76	82	87	93	22x1.5	29
2.0 70-R-000 001 ▸	70A/1, 70B/1/C/K/M/T, 70E1, 70H1 70C/2/3, 70J/1/C/K/T, 70L1, 70M1 70K/2/3	E	1968	AAC	A	+/-		09/90 ▸ 12/95	701959481	**820224**	76	82	87	93	22x1.5	29
2.5,2.5 i ▸ 70-P-250 000	70A/1, 70B/1/C/K/M/T 70E1, 70H1, 70C/2/3, 70J 1/C/K/M/T, 70L1, 70M1 70K/2/3/K	E	2460	AAF	M	+/-		09/90 ▸ 07/93	251959481K	**820229**	79	85	87	93	22X1.5	29
2.5 ▸ 70-P-250 000	70BC	E	2460	AAF	A	+/-		09/90 ▸ 07/93	251959481K	**820229**	79	85	87	93	22X1.5	29
2.5,2.5 i	70A/1, 70B/1/C/K/M/T 70E1, 70H1, 70C/2/3, 70J 1/C/K/M/T/W, 70L1, 70M1 70K/2/3/K	E	2460	AAF,ACU	M	+/-		09/90 ▸ 05/96	701959481	**820224**	76	82	87	93	22x1.5	29
2.5	70A/1, 70B/1/C/K/M/T, 70E1, 70H1 70C/2/3, 70J/1/C/K/M/T/W, 70L1 70M1, 70K/2/3	E	2460	AAF,ACU	A	+/-		10/91 ▸ 12/95	701959481	**820224**	76	82	87	93	22x1.5	29
1.9 D	70BC	D	1896	1X	M	+		09/90 ▸ 12/95	701959481C	**820303**	75	82	80	87	22X1.5	29
1.9 D,1.9 TD ▸ 70-P-250 000	70A/1, 70B/1/C/K/M/T 70E1, 70H1, 70C/2/3, 70J 1/C/K/M/T, 70L1, 70M1 70K/2/3	D	1896	1X, ABL	M	+/-		09/90 ▸ 07/93	251959481K	**820229**	79	85	87	93	22X1.5	29
1.9 D,1.9 TD	70C3, 70B/C/T, 70J/T/W	D	1896	1X,ABL	M	+/-		09/90 ▸ 12/95	701959481	**820224**	76	82	87	93	22x1.5	29

• **New** Nouveau **Nuevo** Novo **Nuovo** Nieuw **Neu** Yeni Новый Nou

VOLKSWAGEN (.../...)

Transporter (F70) (90>96) (.../...)

2.4 D	70A/1, 70B/1/C/K/M/T, 70E1, 70H1 70C/2/3, 70J/1/C/K/T/W, 70L1, 70M1 70K/2/3/K	D	2370	AAB	M	+		09/90 ▸ 05/96	701959481C	**820303**	75	82	80	87	22X1.5	29
2.4 D	70A/1, 70B/1/K/M/T, 70E1, 70H1, 70C 2/3, 70J/1/C/K/M/T/W, 70L1, 70M1 70K/2/3	D	2370	AAB	A	+		09/90 ▸ 12/95	701959481C	**820303**	75	82	80	87	22X1.5	29
2.4 D ▸ 70-P-250 000	70A/1, 70B/1/C/K/M/T, 70E1, 70H1 70C/2/3, 70J/1/C/K/T, 70L1, 70M1 70K/2/3/K	D	2370	AAB	M	+/-		09/90 ▸ 07/93	251959481K	**820229**	79	85	87	93	22X1.5	29
2.4 D ▸ 70-P-250 000	70A1	D	2370	AAB	A	+/-		09/90 ▸ 07/93	251959481K	**820229**	79	85	87	93	22X1.5	29
2.4 D	70A/1, 70B/1/C/K/M/T, 70E1, 70H1 70C/2/3, 70J/1/C/K/T/W, 70L1, 70M1 70K/2/3/K	D	2370	AAB	M	+/-		09/90 ▸ 12/95	701959481	**820224**	76	82	87	93	22x1.5	29
2.4 D	70A/1, 70B/1/K/M/T, 70E1, 70H1, 70C 2/3, 70J/1/C/K/M/T/W, 70L1, 70M1 70K/2/3	D	2370	AAB	A	+/-		05/92 ▸ 12/95	701959481	**820224**	76	82	87	93	22x1.5	29
2.5 TDI	70A/1, 70B/1/K/M/T, 70E1 70C/2/3, 70H/1/3, 70K2 70L1, 70M1, 70J/1/K/W	D	2460	ACV	M	+/-		09/95 ▸ 12/95	701959481	**820224**	76	82	87	93	22x1.5	29

Transporter (F7D) (96>2003)

2.0 i	7DA/1, 7DB/1/K, 7DE1, 7DH1, 7DC/2/3 A/G/M/T/U, 7DJ/1/K, 7DL1, 7DM1, 7DK 2/3/M/W	E	1968	AAC	M			01/96 ▸ 06/03	701959481	**820224**	76	82	87	93	22x1.5	29
2.5 i	7DA/1, 7DB/1/K, 7DE1, 7DH1, 7DC/1/2 3/A/G/M/T/U, 7DJ/1/K, 7DL1, 7DM1 7DK/2/3/J/T/W	E	2460	ACU,AET,AEU,APL,AVT	M			01/96 ▸ 06/03	701959481	**820224**	76	82	87	93	22x1.5	29
2.5 i	7DA/1, 7DB/1/K, 7DE1, 7DH1, 7DC/2/3 A/G/M/T/U, 7DJ/1/K, 7DL1, 7DM1, 7DK 2/3/T/W	E	2460	ACU,AET,AEU,APL,AVT	A			01/96 ▸ 06/03	701959481	**820224**	76	82	87	93	22x1.5	29
2.5 i	7DA/1, 7DB/1/K, 7DE1, 7DH1, 7DC/1/2 3/M/T/U, 7DJ/1/K, 7DL1, 7DM1, 7DK/2 T	E	2460	AEU, AET, ACU, AVT, APL	M	+		05/96 ▸	701959481C	**820303**	75	82	80	87	22X1.5	29
2.5 i	7DA/1, 7DB/1/K, 7DE1, 7DH1, 7DC/2/3 M/T/U, 7DJ/1/K, 7DL1, 7DM1, 7DK/2/T	E	2460	APL, AVT, AEU, AET, ACU	A	+		05/96 ▸	701959481C	**820303**	75	82	80	87	22X1.5	29
2.8 i VR6	7DA/1, 7DB/1/K, 7DE1 7DH1, 7DC/2/3/A/G/M/T/U 7DJ/1/K, 7DL1, 7DM1, 7DK 2/3/M/T/W	E	2792	AES	M			01/96 ▸ 06/03	701959481	**820224**	76	82	87	93	22x1.5	29
2.8 i V6 24V,2.8 i VR6	7DA/1, 7DB/1/K, 7DE1 7DH1, 7DC/2/3/A/G/M/T/U 7DJ/1/K, 7DL1, 7DM1, 7DK 2/3/M/T/W	E	2792	AES,AMV	A			01/96 ▸ 06/03	701959481	**820224**	76	82	87	93	22x1.5	29
1.9 TD	7DA/1, 7DB/1/K, 7DE1 7DH1, 7DC/2/3/A/G/M/T/U 7DJ/1/K, 7DL1, 7DM1, 7DK 2/3/M/T/W	D	1896	ABL	M			01/96 ▸ 06/03	701959481	**820224**	76	82	87	93	22x1.5	29
2.4 D	7DA/1, 7DB/1/K, 7DE1, 7DH1, 7DC/2/3 A/G/M/T/U, 7DJ/1/K, 7DL1, 7DM1, 7DK 2/3/T/W	D	2370	AAB,AJA	M			01/96 ▸ 06/03	701959481	**820224**	76	82	87	93	22x1.5	29
2.4 D	7DA/1, 7DB/1/K, 7DE1, 7DH1, 7DC/2/3 A/G/M/T/U, 7DJ/1/K, 7DL1, 7DM1, 7DK 2/3/T/W	D	2370	AAB,AJA	A			01/96 ▸ 06/03	701959481	**820224**	76	82	87	93	22x1.5	29
2.4 D	7DA/1, 7DB/1/K, 7DE1, 7DH1, 7DC/2/3 A/G/M/T/U, 7DJ/1/K, 7DL1, 7DM1, 7DK 2/3/T/W	D	2370	AAB	M	+		01/96 ▸	701959481C	**820303**	75	82	80	87	22X1.5	29
2.4 D	7DA/1, 7DB/1/K, 7DE1, 7DH1, 7DC/2/3 A/G/M/T, 7DJ/1/K, 7DL1, 7DM1, 7DK/2 3/T/W	D	2370	AAB	A	+		01/96 ▸ 09/98	701959481C	**820303**	75	82	80	87	22X1.5	29
2.5 TDi	7DA/1, 7DB/1/K, 7DE1 7DH1, 7DC/1/2/3/A/G/M/T U, 7DJ/1/K, 7DL1, 7DM1 7DK/2/3/T/W	D	2460	ACV,AHY,AXL,AYC	M			01/96 ▸ 06/03	701959481	**820224**	76	82	87	93	22x1.5	29

• **New** Nouveau **Nuevo** Novo **Nuovo** Nieuw **Neu** Yeni Новый Nou

		Type Ctr.		cc		AC			OE	Valeo	(°)C T1	T2	T3	T4	COD.	mm
VOLKSWAGEN (.../...)																		
Transporter (F7D) (96>2003) (.../...)																		
2.5 DTi,2.5 TDi	*7DA/1, 7DB/1/K, 7DE1 7DH1, 7DC/2/M/T/U, 7DJ/1 K, 7DL1, 7DM1, 7DK/2/T*	D	2460	ACV,AUF,AXL,AYC	A			01/96 ▸ 06/03	701959481	**820224**	76	82	87	93	22x1.5	29
2.5 TDi	*7DA/1, 7DB/1/K, 7DE1 7DH1, 7DC/1/2/3/A/G/M/T U, 7DJ/1/K, 7DL1, 7DM1 7DK/2/3/T/W*	D	2460	ACV, AXL	M	+		01/96 ▸	701959481C	**820303**	75	82	80	87	22X1.5	29
2.5 DTi,2.5 TDi	*7DCM, 7DE1, 7DJ1, 7DB/1 7DL1, 7DM1, 7DK/2/T*	D	2460	AXL, ACV	A	+		08/96 ▸	701959481C	**820303**	75	82	80	87	22X1.5	29
2.5 TDi	*7DA/1, 7DB/1/K, 7DE1 7DH1, 7DC/2/M/T/U, 7DJ/1 K, 7DL1, 7DM1, 7DK/2/T*	D	2461	AJT,AXG,AYY	M			05/98 ▸ 06/03	701959481	**820224**	76	82	87	93	22x1.5	29
VOLVO																		
240-260																		
2.0,2.0 i	*242-11, 242-24, 242-21*	E	1986	B19A,B19E,B19K,B20A	M			08/74 ▸ 08/84	13785043	**820205**	95		100		14X1.5	
2.0	*244-21, 244-24, 244-4*	E	1986	B19A,B200E	M			03/79 ▸ 08/82	13785043	**820205**	95		100		14X1.5	
2.0	*245-24, 245-21*	E	1986	B19K,B200E	M			07/81 ▸ 08/82	13785043	**820205**	95		100		14X1.5	
2.0	*244233, 244273, 245243, 244242 244243, 244231, 245273, 245242*	E	1986	B200E,B200F,B200K	M			09/82 ▸ 1993	13785043	**820205**	95		100		14X1.5	
2.0	*244-21, 244-24*	E	1986	B19A,B200E	A			03/79 ▸ 08/82	13785043	**820205**	95		100		14X1.5	
2.0	*245-4*	E	1986	B200E	A			07/79 ▸ 08/82	13785043	**820205**	95		100		14X1.5	
2.0	*245277, 244247, 244277*	E	1986	B200E,B200F	A			09/82 ▸ 1993	13785043	**820205**	95		100		14X1.5	
2.1,2.1 i	*242-41, 242-44*	E	2127	B21A,B21E	M			08/74 ▸ 07/79	13785043	**820205**	95		100		14X1.5	
2.1 Turbo	*245-*	E	2127	B21ET	M			07/81 ▸ 08/82	13785043	**820205**	95		100		14X1.5	
2.1 Turbo	*245462*	E	2127	B21ET	M			09/82 ▸ 06/85	13785043	**820205**	95		100		14X1.5	
2.3 i	*242-34*	E	2316	B23E	M			03/79 ▸ 07/79	13785043	**820205**	95		100		14X1.5	
2.3	*244, 244-84*	E	2316	B230E,B23A	M			03/79 ▸ 08/82	13785043	**820205**	95		100		14X1.5	
2.3	*264*	E	2316	B23A	M			08/80 ▸ 07/82	13785043	**820205**	95		100		14X1.5	
2.3	*244842, 245883, 245842, 244843 244883, 244833, 245843, 245833*	E	2316	B230E,B230F,B230FD,B23E	M			09/82 ▸ 07/93	13785043	**820205**	95		100		14X1.5	
2.3	*244-84*	E	2316	B230E	A			03/79 ▸ 08/82	13785043	**820205**	95		100		14X1.5	
2.3	*245847*	E	2316	B23E	A			09/82 ▸ 06/84	13785043	**820205**	95		100		14X1.5	
2.7	*265*	E	2664	B27A,B27E	M			08/78 ▸ 07/80	13785043	**820205**	95		100		14X1.5	
2.7	*265*	E	2664	B27A,B27E	A			08/78 ▸ 07/80	13785043	**820205**	95		100		14X1.5	
2.8	*265, 265682*	E	2849	B28A,B28E	M			08/79 ▸ 07/85	13785043	**820205**	95		100		14X1.5	
2.8	*265, 265688*	E	2849	B28A,B28E	A			08/79 ▸ 07/85	13785043	**820205**	95		100		14X1.5	
2.4 D	*265*	D	2383	D24	M			08/78 ▸ 07/85	13785043	**820205**	95		100		14X1.5	
2.4 D	*244778*	D	2383	D24	A			09/82 ▸ 06/83	13785043	**820205**	95		100		14X1.5	
440-460-480																		
1.6	*LX173E*	E	1596	B16F	M			02/00 ▸ 06/97	3463730	**819743**	84		94		22X1.5	29
1.6 i	*KX173E*	E	1596	B16F	M			02/00 ▸ 06/97	3463730	**819743**	84		94		22X1.5	29
1.6	*LX173E*	E	1596	B16F	M			10/91 ▸ 06/97	3448916	**819769**	84	91	95	102	22X1.5	29
1.6 i	*KX173E*	E	1596	B16F	M			10/91 ▸ 06/97	3448916	**819769**	84	91	95	102	22X1.5	29
1.7 581056 ▸	*EX173E, EX183E, EX083E*	E	1721	B18FP, B18F, B18EP	M	+/-		10/92 ▸ 06/97	3463730	**819743**	84		94		22X1.5	29
1.7 i,1.7 i Turbo	*KX143E, KX193E, KX063E KX183E*	E	1721	B18EP, B18FT, B18FTM, B18FP	M			10/88 ▸ 06/95	3448916	**819769**	84	91	95	102	22X1.5	29
1.7 i,1.7 i Turbo	*KX143E, KX183E, KX193E KX063E*	E	1721	B18EP, B18FP, B18FT, B18FTM	M			10/88 ▸ 06/95	3435172	**819743**	84		94		22X1.5	29
1.7 i,1.7 i Turbo	*LX143E, LX183E, LX063E*	E	1721	B18EP, B18FP, B18FTM	M			01/90 ▸ 1992	3435172	**819743**	84		94		22X1.5	29
1.7 i,1.7 i Turbo	*LX063E, LX143E, LX183E*	E	1721	B18FTM, B18EP, B18FP	M			01/90 ▸ 1992	3448916	**819769**	84	91	95	102	22X1.5	29
1.7 581056 ▸	*EX085E*	E	1721	B18EP	A	+/-		10/92 ▸ 06/97	3463730	**819743**	84		94		22X1.5	29
1.7 i	*KX185E, KX145E*	E	1721	B18FP, B18EP	A			10/88 ▸ 1992	3448916	**819769**	84	91	95	102	22X1.5	29
1.7 i	*KX145E, KX185E*	E	1721	B18EP, B18FP	A			10/88 ▸ 1992	3435172	**819743**	84		94		22X1.5	29
1.7 i	*LX185E, LX145E*	E	1721	B18FP, B18EP	A			01/90 ▸ 1992	3435172	**819743**	84		94		22X1.5	29
1.7 i	*LX185E, LX145E*	E	1721	B18FP, B18EP	A			01/90 ▸ 1992	3448916	**819769**	84	91	95	102	22X1.5	29
1.7 ▸ 551749	*EX085E, EX145E*	E	1721	B18EP, B18E	A	+/-		07/86 ▸	3451216	**819769**	84	91	95	102	22X1.5	29

• **New** Nouveau **Nuevo** Novo **Nuovo** Nieuw **Neu** Yeni Новый Nou

		Type Ctr.		CC		AC			OE	Valeo	(°)C T1	T2	T3	T4	COD.	○: mm	
VOLVO (.../...)																	
440-460-480 (.../...)																	
1.7,1.7 i Turbo ▸ 551749	*EX193E, EX063E, EX143E EX053E, EX173E, EX083E EX183E*	E	1721	B18FT, B18FTM, B18E, B18ED B18FP, B18EP, B18F	M	+/-		07/86 ▸	3451216	**819769**	84	91	95	102	22X1.5	29
1.7	*KX023E, KX013E*	E	1783	B18KP, B18K	M			10/88 ▸ 1992	3435172	**819743**	84		94		22X1.5	29
1.7	*LX023E*	E	1783	B18KP	M			01/90 ▸ 1992	3435172	**819743**	84		94		22X1.5	29
1.7	*LX023E*	E	1783	B18KP	M			01/90 ▸ 1992	3448916	**819769**	84	91	95	102	22X1.5	29
1.7	*KX013E*	E	1783	B18K	M			09/90 ▸ 1992	3448916	**819769**	84	91	95	102	22X1.5	29
1.8 i	*LX163E*	E	1794	B18U	M			10/91 ▸ 06/95	3448916	**819769**	84	91	95	102	22X1.5	29
1.8 i	*KX153E, KX163E*	E	1794	B18U-200, B18U	M			10/91 ▸ 06/97	3435172	**819743**	84		94		22X1.5	29
1.8 i	*KX163E, KX153E*	E	1794	B18U, B18U-200	M			10/91 ▸ 06/97	3448916	**819769**	84	91	95	102	22X1.5	29
1.8 i	*LX163E*	E	1794	B18U	M			10/91 ▸ 06/95	3435172	**819743**	84		94		22X1.5	29
1.8 i	*KX166E, KX156E*	E	1794	B18U, B18U-200	A			08/94 ▸ 06/97	3435172	**819743**	84		94		22X1.5	29
1.8 i	*KX156E, KX166E*	E	1794	B18U-200, B18U	A			08/94 ▸ 06/97	3448916	**819769**	84	91	95	102	22X1.5	29
2.0	*EX313E*	E	1998	B20F	M	+/-		10/92 ▸	3463730	**819743**	84		94		22X1.5	29
2.0 i	*KX313E*	E	1998	B20F	M			10/92 ▸ 06/97	3463730	**819743**	84		94		22X1.5	29
2.0	*LX313E*	E	1998	B20F	M			07/93 ▸ 06/97	3463730	**819743**	84		94		22X1.5	29
2.0	*EX315E*	E	1998	B20F	A	+/-		10/92 ▸	3463730	**819743**	84		94		22X1.5	29
2.0 i	*KX315E*	E	1998	B20F	A			10/92 ▸ 06/97	3463730	**819743**	84		94		22X1.5	29
2.0	*LX315E*	E	1998	B20F	A			07/93 ▸ 06/97	3463730	**819743**	84		94		22X1.5	29
1.9 TD	*LX703E, LX793E*	D	1870	D19TEGR, D19T	M			07/94 ▸ 06/97	3463730	**819743**	84		94		22X1.5	29
1.9 TD	*KX703E, KX793E*	D	1870	D19TEGR, D19T	M			07/94 ▸ 06/97	3463730	**819743**	84		94		22X1.5	29
740-760-780																	
2.3 Turbo 2.3 Turbo Intercooler	*764862, 704862, 764872*	E	2316	B230ET,B230FT	M	-		07/83 ▸ 1990	13785043	**820205**	95		100		14X1.5	
2.3 Turbo 2.3 Turbo Intercooler	*704865, 764876, 764865*	E	2316	B230ET,B230FT	A	-		07/83 ▸ 1990	13785043	**820205**	95		100		14X1.5	
2.4 TD,2.4 TD Intercooler	*764762, 704762, 765752 764752*	D	2383	D24T,D24TIC	M	-		02/82 ▸ 1990	13785043	**820205**	95		100		14X1.5	
2.4 TD,2.4 TD Intercooler	*764765, 704765, 764755*	D	2383	D24T,D24TIC	A	-		02/82 ▸ 1990	13785043	**820205**	95		100		14X1.5	

• **New** Nouveau **Nuevo** Novo **Nuovo** Nieuw **Neu** Yeni Новый Nou

COOLANT TEMPERATURE SENSOR

CAPTEUR DE TEMPÉRATURE DU LIQUIDE DE REFROIDISSEMENT / SENSOR DE TEMPERATURA DEL LIQUIDO REFRIGERANTE / SENSORE DI TEMPERATURE DEL LIQUIDO DI RAFFREDDAMENTO / KÜHLMITTELTEMPERATURSENSOR

VALEO PRODUCT CHARACTERISTICS

Caractéristiques du produit Valeo / Características del producto Valeo / Caratteristiche del prodotto Valeo / Valeo Produktmerkmale

DESIGN OF SENSOR

Conception du capteur / Diseño del sensor / Progettazione di sensore / Konstruktion des Sensors

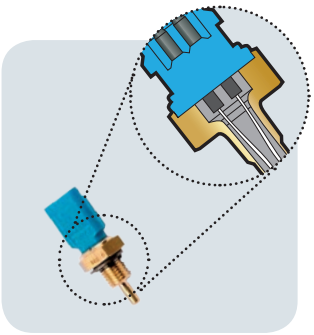

SCREW FIXATION

- FR Fixation par vis
- SP Fijación con rosca
- IT Montaggio con filettatura
- DE Schraubenfixierung

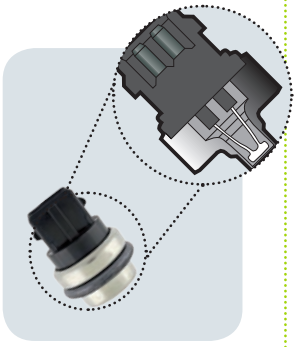

CLIP FIXATION

- FR Fixation par clip
- SP Fijación con clip
- IT Fissagio con clip
- DE Clip-Halterung

ELECTRICAL SCHEME OF SENSOR

Schema électrique du capteur / Esquema eléctrico de sensor / Schema elettrico di sensore / Elektrischer Schaltplan des Sensors

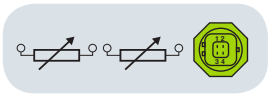

DOUBLE FUNCTION 4 PINS

- FR Double fonction 4 broches
- SP Función doble 4 pines
- IT Doppia funzione 4 pini
- DE Doppelfunktion 4 pins

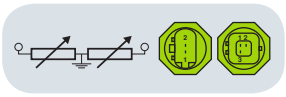

COMBINED CIRCUIT 2 / 3 PINS

- FR Circuit combiné 2 / 3 broches
- SP Circuito combinado 2 / 3 pines
- IT Circuito di combinata 2 / 3 pini
- DE Kombinierte Schaltung 2 / 3 pins

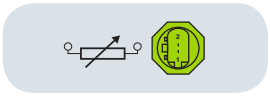

VARIABLE RESISTANCE 2 PINS

- FR Résistance variable 2 broches
- SP Resistencia variable 2 pines
- IT Resistenza variable 2 pini
- DE Variabler Widerstand 2 pins

RESISTANCE 1 & 2 PINS

- FR Résistance 1 / 2 broches
- SP Resistencia 1 / 2 pines
- IT Resistenza 1 / 2 pini
- DE Widerstand 1 / 2 pins

POSITION IN VEHICLE

Position dans le véhicule / Posición en vehículo / Posizione nel veicolo / Position Im Fahrzeug

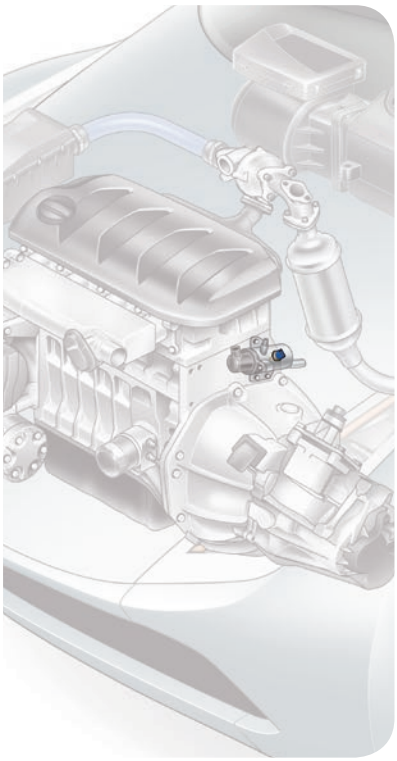

- EN The coolant temperature sensor is located in the thermostat water flange or at engine block, sending an electrical signal to engine control unit
- FR Le capteur de température du liquide de refroidissement est dans le corps du thermostat ou du bloc-moteur, et envoie un signal électrique au calculateur de contrôle moteur
- SP El sensor de temperatura de liquido refrigerante se encuentra en el cuerpo del termostato o en el monoblock, enviando una señal eléctrica al comando del motor
- IT Sensore di temperatura del liquido refrigerante è nel corpo termostato o blocco motore, inviando un segnale il comando motore
- DE Der Kühlmittel-Temperaturfühler befindet sich im Thermostat oder am Motorblock und sendet ein elektrisches Signal an das Motorsteuergerät

INTERFACE

Interface / Interfaz / Interfaccia / Schnittstelle

STRAIGHT CONECTOR OR BENDED

- FR Connecteur axial ou en angle
- SP Conector axial o en angulo
- IT Connettore assiale o dell'angolo
- DE Axialer Anschluss oder abgewinkelt

ACCESSORIES

OF PRODUCT FOR MOUNTING*

Accessoires de produit pour le montage* / Accesorios del producto para el montaje* / Accessori del prodotto per il montaggio* / Zubehör für den Einbau des Produkts*

- EN * There are several configurations in the range
- FR * Il existe plusieurs configurations dans l'offre
- SP * Existen varias configuraciones en la gama
- IT * Non tutti i riferimenti possono avere gli accessori, così come indicato nell'immagine
- DE * Mehrere Konfigurationen Werden Angeboten

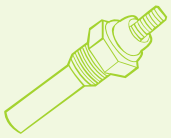

4

Valeo

Valeo

Water temperature sensor
Sonde à thermistance
Sensor de temperatura de água
Sensor de temperatura de água
Sensore temperatura acqua
Watertemperatuursensor
Wassertemperaturfühler

Czujnik temperatury wody
Snímač teploty vody
Comutator de temperatură
Su sicklik sensörü
датчик температуры воды

Type Ctr.	E/D	cc		AC		2 3	OE	Valeo	COD.	mm
ALFA ROMEO										
145										
1.3 i *930A3*	E	1351	AR33501	M	+/-		09/94 ▸ 12/96	60504210	**700007**	14X1.5	19
1.4 i Twin Spark 16V *930A3* ▸3174687	E	1370	AR33503	M	+/-		12/96 ▸	7738223	**700022**	12X1.5	19
1.6 i *930A2*	E	1596	AR33201	M	+/-		09/94 ▸ 12/96	60504210	**700007**	14X1.5	19
1.6 i Twin Spark 16V *930A2* ▸3174687	E	1598	AR67601	M	+/-		12/96 ▸	7738223	**700022**	12X1.5	19
1.9 JTD *930A4*	D	1910	AR32302	M	+/-		03/99 ▸ 06/01	46472179	**700028**	12X1.5	19
1.9 TD *930A4*	D	1929	AR33601	M			09/94 ▸ 03/99	60813751	**700021**	12X1.5	19
1.9 TD *930A4*	D	1929	AR33601	M			09/94 ▸	60812439	**700027**	12X1.5	19
1.9 TD *930A4*	D	1929	AR67501, AR33601	M			09/94 ▸ 03/99	7735919	**700010**	16X1.5	19
146										
1.6 i *930B2*	E	1596	AR33201	M	+/-		12/94 ▸ 12/96	60800167	**700019**	12X1.5	19
1.6 i *930B2*	E	1596	AR33201	M	+/-		12/94 ▸ 12/96	60504210	**700007**	14X1.5	19
1.9 JTD *930B4*	D	1910	AR32302	M	+/-		03/99 ▸ 06/01	46472179	**700028**	12X1.5	19
1.9 TDs *930B4*	D	1929	AR33601	M			12/94 ▸ 06/01	60813751	**700021**	12X1.5	19
1.9 TDs *930B4*	D	1929	AR33601	M			12/94 ▸	60812439	**700027**	12X1.5	19
1.9 TDs *930B4*	D	1929	AR67501, AR33601	M			12/94 ▸ 06/01	7735919	**700010**	16X1.5	19
155										
1.6 i Twin Spark 16V *167A6*	E	1598	AR67601	M	+/-		04/96 ▸ 08/97	7738223	**700022**	12X1.5	19
1.7 i Twin Spark 16V *167A4*	E	1747	AR67106	M	+/-		04/96 ▸ 08/97	7738223	**700022**	12X1.5	19
1.7 i Twin Spark *167A4*	E	1749	AR67103	M	+/-		11/91 ▸ 08/97	60504210	**700007**	14X1.5	19
1.8 i Twin Spark *167A4*	E	1773	AR67101, AR67102	M	+/-		11/91 ▸ 03/95	60504210	**700007**	14X1.5	19
2.0 i Turbo *167A2*	E	1995	AR67203	M	+/-		11/91 ▸ 08/97	46477022	**700021**	12X1.5	19
2.0 i Twin Spark *167A2*	E	1995	AR67202, AR67201	M	+/-		11/91 ▸ 03/95	60504210	**700007**	14X1.5	19
1.9 TD *167A3*	D	1929	AR33601	M			04/96 ▸ 08/97	7735919	**700010**	16X1.5	19
156 (97>2003)										
1.6 i Twin Spark 16V *932A4* ▸0084340	E	1598	AR67601	M	+/-		09/97 ▸	7738223	**700022**	12X1.5	19
1.8 i Twin Spark 16V *932A3*	E	1747	AR32201	M	+/-		09/97 ▸	46472179	**700028**	12X1.5	19
2.0 i Twin Spark 16V *932A2*	E	1970	AR32301	M	+/-		09/97 ▸	46472179	**700028**	12X1.5	19
2.5 i V6 24V *932/A1/B1*	E	2492	AR32401, AR32405	M			09/97 ▸	60812240	**700022**	12X1.5	19
2.5 i V6 24V *932/A1/B1*	E	2492	AR32401, AR32405	A	+/-		02/99 ▸	60812240	**700022**	12X1.5	19
1.9 JTD *932/A/B2*	D	1910	AR32302	M			09/97 ▸	60813687	**700002**	16.5X1	19
1.9 JTD *932/A/B2*	D	1910	AR32302	M			09/97 ▸	46472179	**700028**	12X1.5	19
2.4 JTD *932/A/B1*	D	2387	AR32501	M	+/-		09/97 ▸	46472179	**700028**	12X1.5	19
159										
1.9 JTS 16V *939/AX/BX*	E	1859	939A6.000	M	+/-		07/05 ▸	55187822	**700028**	12X1.5	19
2.2 JTS 16V *939/AX/BX*	E	2198	939A5.000	M	+/-		07/05 ▸	55187822	**700028**	12X1.5	19
164 (87>92)										
2.0 i Twin Spark *164A2*	E	1962	AR06416, AR06420	M			07/87 ▸ 09/92	60504210	**700007**	14X1.5	19
164 (92>98)										
2.0 i Twin Spark *164H3*	E	1962	AR64103	M	+/-		09/92 ▸ 09/98	60504210	**700007**	14X1.5	19
2.0 V6 Turbo *164K3*	E	1997	AR64102	M			09/92 ▸ 09/98	7647004	**700023**	12X1.5	19
3.0 i 24V,3.0 i V6 24V *164/H1/K1*	E	2959	AR66304, AR66301, AR66302 AR64306, AR64307, AR64308 AR64304	M			09/92 ▸ 09/98	5972332	**700019**	12X1.5	19
3.0 i V6 *164/H1/K1*	E	2959	AR64305, AR66303	M			09/92 ▸ 09/98	7647004	**700023**	12X1.5	19
3.0 i V6 *164/H1/K1*	E	2959	AR64305, AR66303	A			09/92 ▸ 09/98	7647004	**700023**	12X1.5	19
3.0 i V6 24V *164K1*	E	2959	AR64306, AR66301, AR66302	A			09/92 ▸ 09/98	5972332	**700019**	12X1.5	19
2.5 TD *164/H2/K2*	D	2500	VM08B, VM32B	M			09/92 ▸ 09/98	60573388	**700022**	12X1.5	19
166 (98>2003)										
2.4 JTD *936A2*	D	2387	AR34202	M	+/-		10/98 ▸ 10/00	46472179	**700028**	12X1.5	19
Brera										
2.2 JTS 16V *939DX*	E	2198	939A5.000	M			01/06 ▸	55187822	**700028**	12X1.5	19
GTV (95>2003)										
2.0 i Twin Spark 16V *916C2*	E	1970	AR16201	M	+/-		03/95 ▸ 08/00	7738223	**700022**	12X1.5	19

• **New** Nouveau **Nuevo** Novo **Nuovo** Nieuw **Neu** **Yeni** Новый Nou

			CC		AC			OE	Valeo	COD.	mm
ALFA ROMEO (.../...)												
GTV (95>2003) (.../...)												
3.0 i V6 24V	*916C1*	E	2959	AR16102, AR16105	M	+/-		02/97 ▸ 02/03	60800167	**700019**	12X1.5	19
Spider (95>2003)												
3.0 i V6	*916S1*	E	2959	AR16101	M	+/-		02/95 ▸ 02/03	5972332	**700019**	12X1.5	19
Spider II (2006>)												
2.2 JTS Twin Spark 16V	*939EX*	E	2198	939A5.000	M			03/06 ▸	55187822	**700028**	12X1.5	19
AUDI												
80 (86>91)												
1.6 TD	*8930, 8A20*	D	1588	SB	M	+/-		01/89 ▸ 08/91	251919501D	●**700036**	20	
1.9 D	*8A20*	D	1896	1Y	M	+/-		08/89 ▸ 08/91	251919501D	●**700036**	20	
80 (91>95)												
1.9 TD,1.9 TDi	*8C20, 8C50*	D	1896	1Z,AAZ	M	+/-		09/91 ▸ 07/95	251919501D	●**700036**	20	
1.9 TD,1.9 TDi	*8C20, 8C50*	D	1896	1Z,AAZ	A	+/-		09/91 ▸ 07/95	251919501D	●**700036**	20	
2.0 E,2.0 S	*8C20*	E	1984	ABK, ABT	M			09/91 ▸ 07/92	025906041A	**700011**		20
2.0 E,2.0 S	*8C20*	E	1984	ABT, ABK	A			09/91 ▸ 07/92	025906041A	**700011**		20
1.9 TD,1.9 TDi	*8C20*	D	1896	AAZ, 1Z	M			09/91 ▸ 07/92	025906041A	**700011**		20
1.9 TD	*8C20*	D	1896	AAZ	A			09/91 ▸ 07/92	025906041A	**700011**		20
90 (87>91)												
1.6 TD	*8937, 8A27*	D	1588	SB	M	+/-		04/89 ▸ 12/91	251919501D	●**700036**	20	
100 (90>94)												
2.0 i	*4A20, 4A50*	E	1984	AAE, AAD, ABK	M			12/90 ▸ 07/94	025906041A	**700011**		20
2.0 i	*4A20, 4A50*	E	1984	ABK, AAD, AAE	A			12/90 ▸ 07/94	025906041A	**700011**		20
A4 (94>98)												
1.6 i	*8D2/0/H, 8D5/0/H*	E	1595	AHL, ADP	M			11/94 ▸ 12/98	025906041A	**700011**		20
1.6 i	*8D2/0/H, 8D5/0/H*	E	1595	AHL, ADP	A			11/94 ▸ 12/98	025906041A	**700011**		20
1.6 i ▸ 8D-T-300 000	*8D2/0/H, 8D5/0/H*	E	1595	ADP	M			11/94 ▸ 08/96	058919501A	**700025**		20
1.6 i ▸ 8D-T-300 000	*8D2/0/H, 8D5/0/H*	E	1595	ADP	A			11/94 ▸ 08/96	058919501A	**700025**		20
1.8 i 20V,1.8 i Turbo 20V	*8D2/0/H/S/T, 8D5/0/H/S*	E	1781	ADR, AEB, AFY	M			11/94 ▸ 12/98	025906041A	**700011**		20
1.8 i 20V,1.8 i Turbo 20V	*8D2/0/H/S, 8D5/0/H/S*	E	1781	AEB, ADR, AFY	A			11/94 ▸ 12/98	025906041A	**700011**		20
1.8 i 20V,1.8 i Turbo 20V ▸ 8D-T-300 000	*8D2/0/H/S/T, 8D5/0/H/S*	E	1781	AFY, AEB, ADR	M			11/94 ▸ 08/96	058919501A	**700025**		20
1.8 i 20V,1.8 i Turbo 20V ▸ 8D-T-300 000	*8D2/0/H/S, 8D5/0/H/S*	E	1781	AEB, ADR, AFY	A			11/94 ▸ 08/96	058919501A	**700025**		20
2.4 i V6 ▸ 8D-T-300 000	*8D20, 8D50*	E	2393	AFM	M			07/95 ▸ 08/96	058919501A	**700025**		20
2.6 i V6 ▸ 8D-T-300 000	*8D2/0/H/S, 8D5/0/H/S*	E	2598	ABC, ACZ	M			11/94 ▸ 08/96	058919501A	**700025**		20
2.6 i V6 ▸ 8D-T-300 000	*8D2/0/H/S, 8D5/0/H/S*	E	2598	ABC, ACZ	A			11/94 ▸ 08/96	058919501A	**700025**		20
2.8 i V6,2.8 i V6 30V ▸ 8D-T-300 000	*8D50, 8D2/0/H/S*	E	2771	ACK, AAH	M			11/94 ▸ 08/96	058919501A	**700025**		20
2.8 i V6,2.8 i V6 30V ▸ 8D-T-300 000	*8D50, 8D2/0/H/S*	E	2771	ACK, AAH	A			02/95 ▸ 08/96	058919501A	**700025**		20
1.9 TDi	*8D2/0/H, 8D5/0/H*	D	1896	AFF, AFN, AHU, AHH, 1Z	M			11/94 ▸ 12/98	025906041A	**700011**		20
1.9 TDi	*8D2/0/H, 8D5/0/H*	D	1896	1Z, AHU, AFN	A			01/95 ▸ 12/98	025906041A	**700011**		20
1.9 TDi ▸ 8D-T-300 000	*8D2/0/H, 8D5/0/H*	D	1896	AHU, 1Z, AFN, AFF	M			11/94 ▸ 08/96	058919501A	**700025**		20
1.9 TDi ▸ 8D-T-300 000	*8D2/0/H, 8D5/0/H*	D	1896	AHU, 1Z, AFN	A			01/95 ▸ 08/96	058919501A	**700025**		20
A6 (94>97)												
1.8 E 20V,1.8 i 20V	*4A2/0/H, 4A5/0/H*	E	1781	ADR	M	+/-		07/95 ▸ 09/97	058919501A	**700025**		20
1.8 E 20V	*4A2/0/H, 4A5/0/H*	E	1781	ADR	A	+/-		07/95 ▸ 09/97	058919501A	**700025**		20

• **New** Nouveau **Nuevo** Novo **Nuovo** Nieuw **Neu** **Yeni** Новый Nou

Valeo

Water temperature sensor
Sonde à thermistance
Sensor de temperatura de água
Sensor de temperatura de água
Sensore temperatura acqua
Watertemperatuursensor
Wassertemperaturfühler

Czujnik temperatury wody
Snímač teploty vody
Comutator de temperatură
Su sicklik sensörü
датчик температуры воды

			cc		AC			OE	Valeo	COD.	mm
AUDI (.../...)											
A6 (94>97) (.../...)											
2.0 E,2.0 i	*4A20, 4A50*	E	1984	ADW, ABK, AAE	M	+/-		07/94 ▸ 09/97	025906041A	**700011**		20
2.0 E	*4A20, 4A50*	E	1984	ABK, ADW	A	+/-		07/94 ▸ 09/97	025906041A	**700011**		20
2.4 i V6	*4A20, 4A50*	E	2393	AFM	A	+/-		07/95 ▸ 09/97	026906161	**700038**	10X1	19
2.6 E V6	*4A20, 4A50*	E	2598	ACZ, ABC	M	+/-		07/94 ▸ 09/97	026906161	**700038**	10X1	19
2.6 E V6	*4A20, 4A50*	E	2598	ABC, ACZ	A	+/-		07/94 ▸ 09/97	026906161	**700038**	10X1	19
2.8 E V6,2.8 i V6	*4A20, 4A50*	E	2771	AAH, AEJ	M	+/-		07/94 ▸ 09/97	026906161	**700038**	10X1	19
2.8 E V6,2.8 i V6	*4A20, 4A50*	E	2771	AAH, AEJ	A	+/-		07/94 ▸ 09/97	026906161	**700038**	10X1	19
1.9 TDi	*4A20, 4A50*	D	1896	1Z	M	+/-		07/94 ▸ 06/96	025906041A	**700011**		20
1.9 TDi	*4A20, 4A50*	D	1896	1Z	A	+/-		07/94 ▸ 06/96	025906041A	**700011**		20
Cabriolet											
2.0 E	*8G70*	E	1984	ABK	M	+/-		01/93 ▸ 09/98	025906041A	**700011**		20
2.6 E V6	*8G70*	E	2598	ABC, ACZ	M	+/-		01/94 ▸ 08/00	026906161	**700038**	10X1	19
2.6 E V6	*8G70*	E	2598	ACZ, ABC	A	+/-		01/94 ▸ 08/00	026906161	**700038**	10X1	19
2.6 E V6 ▸ 8G-T-012 000	*8G70*	E	2598	ACZ, ABC	M	+/-		01/94 ▸ 12/99	058919501A	**700025**		20
2.6 E V6 ▸ 8G-T-015 000	*8G70*	E	2598	ABC, ACZ	A	+/-		01/94 ▸ 07/96	058919501A	**700025**		20
2.8 i V6	*8G70*	E	2771	AAH	M	+/-		11/92 ▸ 08/00	026906161	**700038**	10X1	19
2.8 i V6	*8G70*	E	2771	AAH	A	+/-		01/93 ▸ 08/00	026906161	**700038**	10X1	19
2.8 i V6 ▸ 8G-T-015 000	*8G70*	E	2771	AAH	M	+/-		11/92 ▸ 07/96	058919501A	**700025**		20
2.8 i V6 ▸ 8G-T-015 000	*8G70*	E	2771	AAH	A	+/-		01/93 ▸ 07/96	058919501A	**700025**		20
RS6 Quattro											
4.2 i V8 40V	*4B40, 4B60*	E	4172	BCY, BRV	A	+/-		07/02 ▸ 09/04	058919501A	**700025**		20
BMW											
3 series E30											
316i	*AB/11/12, AC/11/12, AJ/11/12*	E	1596	M40B16ME.8	M			09/88 ▸ 09/93	13621709966	**700019**	12X1.5	19
316i,316i Touring	*AB/22, AC/21/22, AJ/21/22*	E	1596	M40B16ME.8	A			09/88 ▸ 09/93	13621709966	**700019**	12X1.5	19
316,318i	*10/12/52, 13/15/31/32/52 72, AC/51/71, AK/31/51*	E	1766	M10B/18V/18LE/18L	M			09/84 ▸ 09/88	13621709966	**700019**	12X1.5	19
316,318i	*10/22/32/42/62/82, AC81 13/41/62/82, AK/41/61*	E	1766	M10B/18V/18L/18LE	A			09/84 ▸ 08/88	13621709966	**700019**	12X1.5	19
318i,318iS	*AF/51/52/91, AJ/51/52, BA 51/52*	E	1796	M40B///18ME, M42B///18, M40B18	M			09/87 ▸ 04/93	13621709966	**700019**	12X1.5	19
318i,318i Touring	*AG81, AF/61/62, AJ/61/62 82, BA/61/62*	E	1796	M40B/18ME/18	A			09/87 ▸ 09/93	13621709966	**700019**	12X1.5	19
320i,320i Touring	*11/51/52, AA31, AD31, 14 32/51/52, AH/52/71, BA/11 12/22/32*	E	1990	M20B/20/20M1.Z7	M			09/84 ▸ 09/93	13621709966	**700019**	12X1.5	19
320i,320i Touring	*1442, AA41, AD41, 11/61 62, AH/61/62/81, BA/41/42*	E	1990	M20B/20/20K/20M1.Z7	A			09/84 ▸ 09/93	13621709966	**700019**	12X1.5	19
320iS	*AC95, AK95*	E	1991	S14B20	M			01/88 ▸ 12/91	13621709966	**700019**	12X1.5	19
323i	*11/71, 14/71/72*	E	2316	M20B23L	M			09/84 ▸ 09/86	13621709966	**700019**	12X1.5	19
323i	*11/82, 14/81/82*	E	2316	M20B23L	A			09/84 ▸ 09/86	13621709966	**700019**	12X1.5	19
325i,325i Touring,325iX	*11/11/12, 12/31/32/71/91 15/31/32/71/91, AG/51/52 BB/11/12/31*	E	2494	M20B/25M1.Z7/25M/G/25ME	M			09/85 ▸ 09/93	13621709966	**700019**	12X1.5	19
325i,325i Touring,325iX	*11/21/22, 1421, 12/01/41 42/81, 15/41/42/81, AG/61 62, BB/21/22/42*	E	2494	M20B/25M1.Z7/25M/G/25ME	A			09/85 ▸ 09/93	13621709966	**700019**	12X1.5	19
325e	*12/51/52, 15/51/52*	E	2692	M20B27M1.Z7	M			02/85 ▸ 08/87	13621709966	**700019**	12X1.5	19
325e	*1562*	E	2692	M20B27M1.Z7	A			09/85 ▸ 08/87	13621709966	**700019**	12X1.5	19
325e	*12/61/62*	E	2693	M20B27ME	A			02/85 ▸ 08/87	13621709966	**700019**	12X1.5	19
324td	*AD91*	D	2443	M21D24WA	M			09/87 ▸ 12/91	13621709966	**700019**	12X1.5	19
324td	*AD01*	D	2443	M21D24WA	A			09/87 ▸ 12/91	13621709966	**700019**	12X1.5	19
3 series E36											
316i	*BE/11/12, CA/11/12/71/72, CE/11/12 CG/10/11/12/16/18*	E	1596	M43B16, M40B16ME.8	M	+/-		12/90 ▸ 04/01	13621709966	**700019**	12X1.5	19

• **New** Nouveau **Nuevo** Novo **Nuovo** Nieuw **Neu** **Yeni** Новый Nou

			CC		AC			OE	Valeo	COD.	mm

BMW (.../...)

3 series E36 (.../...)

316i	BE/21/22, CA/21/22/81/82, CE/21/22 CG/20/21/22/26/28	E	1596	M43B16, M40B16ME.8	A	+/-		04/91 ▸ 04/01	13621709966	**700019**	12X1.5	19
318i,318iS,318ti	BE/51/52, BH/31/32, CA/31 32/51/52/91/92, CE/31/32 CG/51/52	E	1796	M42B///18, M40B///18, M43B18	M	+/-		12/90 ▸ 02/00	13621709966	**700019**	12X1.5	19
318i,318iS,318ti	BE/61/62, BH/41/42, CA/01 02/41/42/61/62, CE/41/42 CG/61/62	E	1796	M43B///18, M42B///18, M40B18	A	+/-		01/91 ▸ 02/00	13621709966	**700019**	12X1.5	19
316i,318iS,318ti	BE/71, CG/71/72, CS/10 11/12/15/16/17/18	E	1895	M43B/19-E46, M44B/19, M43B19-E46G	M	+/-		12/95 ▸ 04/01	13621709966	**700019**	12X1.5	19
316i,318iS,318ti	BE/81, CG/81/82, CS/20/21 22/28	E	1895	M43B19-E46, M44B19	A	+/-		12/95 ▸ 04/01	13621709966	**700019**	12X1.5	19
320i	BF/11/12/51, BJ/11/12/31/32, CB/11 12/51/52, CE/51/52	E	1991	M52B20, M50B20	M	+/-		12/90 ▸ 02/00	13621709966	**700019**	12X1.5	19
320i	BF/21/22/61, BJ/21/22/41/42, CB/21 22/61/62, CE/61/62	E	1991	M52B20, M50B20	A	+/-		12/90 ▸ 02/00	13621709966	**700019**	12X1.5	19
325i	BF/31/32, BJ/51/52, CB/31/32	E	2494	M50B25	M	+/-		12/90 ▸ 07/95	13621709966	**700019**	12X1.5	19
325i	BF/41/42, BJ/61/62, CB/41/42	E	2494	M50B25	A	+/-		12/90 ▸ 08/95	13621709966	**700019**	12X1.5	19
325td,325tds	CC/11/12/31/32, CF/91/92	D	2497	M51A, M51D25	M	+/-		08/91 ▸ 09/99	13622242184	**700022**	12X1.5	19
325td,325tds	CC/21/22/41/42, CF/01/02	D	2497	M51D25, M51A	A	+/-		08/91 ▸ 09/99	13622242184	**700022**	12X1.5	19

5 series E28

525e	DB51, 42/31/32/52	E	2693	M20B27ME	M			12/86 ▸ 08/88	13621709966	**700019**	12X1.5	19
535i	DC/12/31/32	E	3430	M30B/34ME/34M	M			01/85 ▸ 08/88	13621709966	**700019**	12X1.5	19
535i	DC/21/22	E	3430	M30B34M	A			02/85 ▸ 08/88	13621709966	**700019**	12X1.5	19

5 series E34

518i	HA/11/12/31/32, HG/11/12/31	E	1796	M40B18, M43B18	M	+/-		09/89 ▸ 09/96	13621709966	**700019**	12X1.5	19
518i	HA/21/22/41/42	E	1796	M43B18, M40B18	A	+/-		10/93 ▸ 09/95	13621709966	**700019**	12X1.5	19
520i	HB/11/12/31/32	E	1990	M20B/20M1.Z7/20M0.E8	M	+/-		01/88 ▸ 07/90	13621709966	**700019**	12X1.5	19
520i	HB/21/22/41/42	E	1990	M20B/20M0.E8/20M1.Z7	A	+/-		01/88 ▸ 07/90	13621709966	**700019**	12X1.5	19
520i	HB/51/52, HG/51/52	E	1991	M50B20	M	+/-		03/90 ▸ 09/96	13621709966	**700019**	12X1.5	19
520i	HB/61/62, HG/61/62	E	1991	M50B20	A	+/-		03/90 ▸ 09/96	13621709966	**700019**	12X1.5	19
525i,525iX	HC/11/12/13, HD/51/52/71 72, HJ/51/52/71/72	E	2494	M20B25, M50B25	M	+/-		02/88 ▸ 09/96	13621709966	**700019**	12X1.5	19
525i,525iX	HC/21/22/23, HD/61/62/81 82, HJ/61/62/81/82	E	2494	M50B25, M20B25	A	+/-		02/88 ▸ 09/96	13621709966	**700019**	12X1.5	19
530i	HC/51/52	E	2986	M30B30M.E7	M	+/-		01/88 ▸ 04/90	13621709966	**700019**	12X1.5	19
530i	HC/61/62	E	2986	M30B30M.E7	A	+/-		01/88 ▸ 06/90	13621709966	**700019**	12X1.5	19
530i	HE/11/12, HK/11/12	E	2997	M60B30	M	+/-		09/92 ▸ 09/96	13621709966	**700019**	12X1.5	19
530i	HE/21/22, HK/21/22	E	2997	M60B30	A	+/-		09/92 ▸ 09/96	13621709966	**700019**	12X1.5	19
535i	HD/11/12/13	E	3430	M30B/35M7/34M	M	+/-		01/88 ▸ 04/93	13621709966	**700019**	12X1.5	19
535i	HD/21/22/23	E	3430	M30B/35M7/34M	A	+/-		01/88 ▸ 04/93	13621709966	**700019**	12X1.5	19
524td	HA51	D	2443	M21D24WA	M	+/-		03/88 ▸ 08/91	13622242184	**700022**	12X1.5	19
524td	HA51	D	2443	M21D24WA	M	+/-		03/88 ▸ 08/91	13621709966	**700019**	12X1.5	19
524td	HA61	D	2443	M21D24WA	A	+/-		03/88 ▸ 08/91	13622242184	**700022**	12X1.5	19
524td	HA61	D	2443	M21D24WA	A	+/-		03/88 ▸ 08/91	13621709966	**700019**	12X1.5	19
525td,525tds	HA/71/72/91/92, HG/71/72 91	D	2497	M51D25, M51A	M	+/-		08/91 ▸ 09/96	13622242184	**700022**	12X1.5	19
525td,525tds	HA/01/02/81/82, HG/01/81 82	D	2497	M51A, M51D25	A	+/-		08/91 ▸ 09/96	13622242184	**700022**	12X1.5	19

M3 E30

2.3 i	BB01	E	2302	S14B23	M			06/88 ▸ 06/89	13621709966	**700019**	12X1.5	19

CHRYSLER

Grand Voyager (91>96)

2.5 TD		D	2499	M0U	M			10/93 ▸ 10/95	4720598	**700022**	12X1.5	19

• **New** Nouveau **Nuevo** Novo **Nuovo** Nieuw **Neu** **Yeni** Новый Nou

			cc		AC			OE	Valeo	COD.		mm
CHRYSLER (.../...)												
Voyager (91>95)												
2.5 TD	*HN5M, HN5MR*	D	2499	M0U	M			01/93 ▸ 10/95	4720598	**700022**	12X1.5	19
CITROËN												
AX (91>98)												
1.0	*ZAZ/A/AT/H*	E	954	TU9	M	+/-		05/91 ▸ 12/92	024261	**700039**	14X1.25	19
1.0,1.0 i	*ZAL/H/J, ZAZ/A/AT/H*	E	954	TU9, TU9M	M	+/-		05/91 ▸ 07/98	133772	**700001**	14X1.25	17
1.0 i	*ZAL/H/J*	E	954	TU9M	M	+		05/91 ▸ 07/98	1920K9	**700015**	12X1.5	19
1.0 i	*ZAL/H/J*	E	954	TU9M	M	-		05/91 ▸ 07/98	024246	**700019**	12X1.5	19
1.1 i	*ZAD/A/AB/AC/B/BB/BC*	E	1124	TU1M	M	+/-		05/91 ▸ 07/96	024246	**700019**	12X1.5	19
1.1,1.1 i	*ZALAT, ZAD/A/AB/AC/B/BB BC, ZAZ/B/BT/J*	E	1124	TU1M, TU1	M	+/-		05/91 ▸ 07/96	133772	**700001**	14X1.25	17
1.1	*ZAL/AT, ZAZ/B/BT/J*	E	1124	TU1	M			05/91 ▸ 07/96	024261	**700039**	14X1.25	19
1.4	*ZAD/H/J, ZAL/B/C, ZAZ/D/Y*	E	1360	TU3S, TU3.2	M	+/-		05/91 ▸ 07/96	024261	**700039**	14X1.25	19
1.4,1.4 i	*ZAD/D/DB/E/EB/H/J/M/N ZAL/B/C/F/G, ZAZ/D/Y*	E	1360	TU3M, TU3J2, TU3MC, TU3.2 TU3S	M	+/-		05/91 ▸ 07/96	024246	**700019**	12X1.5	19
1.5 D	*ZAK/E/ET/F*	D	1527	TUD5	M	+/-		07/94 ▸ 07/96	133878	**700017**	14X1.25	19
BX												
1.1	*XBEP, XBXR*	E	1124	XW7B2, TU1	M			09/82 ▸ 06/91	024261	**700039**	14X1.25	19
1.4,1.4 i	*XBE/C/R/RB/RBB/S, XBX/A/D DA/DBC/T/Y/YE*	E	1360	TU3A, XY6C, XY6D, XY7CP, XY6	M			09/82 ▸ 12/94	024261	**700039**	14X1.25	19
1.4,1.4 i	*XBF/G, XBH/C/D/Y*	E	1360	TU3M, TU3.2	M			07/89 ▸ 12/94	133772	**700001**	14X1.25	17
1.9 i 16S	*XBEJ, XBFC*	E	1905	XU9J4	M			07/87 ▸ 12/94	133772	**700001**	14X1.25	17
C Crosser												
2.2 HDi 16V	*VU4HNH*	D	2179	DW12MTED4	M	+		07/07 ▸	1338C1	•**700055**	20	
C1												
1.4 HDi	*PM8HTC, PN8HTC*	D	1398	DV4TD	M	+/-		06/05 ▸	1338C1	•**700055**	20	
C2												
1.4 HDi	*JG8/HXB/HZC, JM8/HXB/HXC HZB/HZC*	D	1398	DV4TD	M	+/-		09/03 ▸ 01/10	1338C1	•**700055**	20	
1.6 HDi 16V	*JM9HZC*	D	1560	DV6TED4	M	+/-		11/05 ▸ 01/10	1338C1	•**700055**	20	
C3 (2002>2005)												
1.1 i ▸9428	*FCH/FXB/FXC, FNH/FXB/FXC*	E	1124	TU1JP	M	+/-		04/02 ▸ 09/02	1338A6	•**700054**	12X1.5	21
1.4 i ▸9428	*FCK/FVB/FVC, FNK/FVB/FVC*	E	1360	TU3JP	M	+/-		04/02 ▸ 09/02	1338A6	•**700054**	12X1.5	21
1.4 i ▸9428	*FCK/FVE/FVF, FNK/FVE/FVF*	E	1360	TU3JP	A	+/-		04/02 ▸ 09/02	1338A6	•**700054**	12X1.5	21
1.6 i 16V ▸9428	*FCNFUB, FNNFUB*	E	1587	TU5JP4	M	+/-		04/02 ▸ 08/02	1338A6	•**700054**	12X1.5	21
1.4 HDi,1.4 HDi 16V	*FC8/HYB/HZ/HZB, FN8/HYB HZB, FR8/HYB/XZB*	D	1398	DV4TD,DV4TED4	M	+/-		04/02 ▸ 10/05	1338C1	•**700055**	20	
1.6 HDi 16V	*FC9HXC*	D	1560	DV6ATED4	M	+/-		06/05 ▸ 10/05	1338C1	•**700055**	20	
C3 (2005>)												
1.4 i GNV	*FCKFVC*	F	1360	TU3JP	M	+/-		11/05 ▸ 10/09	1338A6	•**700054**	12X1.5	21
1.4 i	*FCK/FVB/FVC*	E	1360	TU3A,TU3JP	M	+/-		11/05 ▸ 10/09	1338A6	•**700054**	12X1.5	21
1.1 i	*FCHFXC*	E	1124	TU1A	M	+/-		11/05 ▸ 10/09	1338A6	•**700054**	12X1.5	21
1.4 HDi	*FC8HZC*	D	1398	DV4TD	M	+/-		11/05 ▸ 10/09	1338C1	•**700055**	20	
1.6 HDi 16V	*FL9HXC, FC9/HXC/HZC*	D	1560	DV6ATED4,DV6TED4	M	+/-		11/05 ▸ 10/09	1338C1	•**700055**	20	
C3 Pluriel												
1.4 HDi	*HB8HZB*	D	1398	DV4TD	M			02/04 ▸ 12/05	1338C1	•**700055**	20	
C4												
2.0 i 16V	*LCRFJF*	E	1997	EW10A	A	+/-		11/04 ▸	1338C1	•**700055**	20	

• **New** Nouveau **Nuevo** Novo **Nuovo** Nieuw **Neu** **Yeni** Новый Nou

			CC		AC			OE	Valeo	COD.	mm	
CITROËN (.../...)												
C4 (.../...)												
1.6 HDi 16V	*LA9/HVC/HXC/HY/HYC/HZC HZH, LD9HZC, LC9/HVC/HXC HYB/HYC/HZC, LG9/HXC/HZC*	D	1560	DV6ATED4,DV6TED4,DV6TED4B	M	+/-		11/04 ▸	1338C1	●700055	20	
1.6 HDi 16V	*LC9HZ*	D	1560	DV6TED4	A	+/-		03/06 ▸	1338C1	●700055	20	
2.0 HDi 16V	*LARHRH, LCRHRH*	D	1997	DW10BTED4	M	+/-		11/04 ▸	1338C1	●700055	20	
2.0 HDi 16V	*LAR/HR, LCR/HR/HRJ*	D	1997	DW10BTED4	A	+/-		11/04 ▸	1338C1	●700055	20	
C4 Picasso (2006>)												
1.8 i 16V	*UA6FYC, UD6FYC*	E	1749	EW7A	M	+/-		09/06 ▸	1338C1	●700055	20	
1.6 HDi 16V	*UA9/HZC/HZH, UD9/HZC/HZH*	D	1560	DV6TED4	M	+/-		09/06 ▸	1338C1	●700055	20	
2.0 HDi 16V	*UARHRH, UDRHRH*	D	1997	DW10BTED4	M	+/-		09/06 ▸	1338C1	●700055	20	
2.0 HDi 16V	*UDRHRJ*	D	1997	DW10BTED4	A	+/-		03/07 ▸	1338C1	●700055	20	
C5 (2001>2004)												
2.0 HDi	*DCR/HYB/HZB, DER/HSB/HYB HZB*	D	1997	DW10ATED,DW10TD	M			02/01 ▸ 08/04	1338C1	●700055	20	
2.0 HDi	*DCR/HZE/HZF, DER/HZE/HZF*	D	1997	DW10ATED	A			02/01 ▸ 08/04	1338C1	●700055	20	
2.2 HDi 16V	*DC4HXB, DE4HXB*	D	2179	DW12TED4	M			02/01 ▸ 08/04	1338C1	●700055	20	
2.2 HDi 16V	*DC4HXE, DE4HXF*	D	2179	DW12TED4	A			02/01 ▸ 08/04	1338C1	●700055	20	
C5 (2004>2007)												
2.0 i 16V	*RCRFJC, RERFJC*	E	1997	EW10A	M			09/04 ▸ 06/08	1338C1	●700055	20	
2.0 i 16V	*RCRFJF, RERFJF*	E	1997	EW10A	A			09/04 ▸ 06/08	1338C1	●700055	20	
1.6 HDi 16V	*RC9HZC, RE9HZC*	D	1560	DV6TED4	M	+/-		09/04 ▸ 06/08	1338C1	●700055	20	
2.0 HDi 16V	*RCR/HRG/HRH, RER/HRG/HRH*	D	1997	DW10BTED4	M	+/-		09/04 ▸ 06/08	1338C1	●700055	20	
2.0 HDi 16V	*RCR/HRJ, RER/HRG/HRJ*	D	1997	DW10BTED4	A			11/05 ▸ 06/08	1338C1	●700055	20	
2.2 HDi 16V	*RC4HPH, RE4HPH*	D	2179	DW12BTED4	M	+		02/06 ▸ 06/08	1338C1	●700055	20	
2.2 HDi 16V	*RC4/HRJ/HSJ, RE4/HRJ/HSJ*	D	2179	DW12BTED4	A	+		09/06 ▸ 06/08	1338C1	●700055	20	
C5 (2008>)												
1.8 i 16V	*RD6FYC, RW6FYC*	E	1749	EW7A	M	+		03/08 ▸	1338C1	●700055	20	
2.0 i 16V	*RDRFJC, RWRFJC*	E	1997	EW10A	M	+		03/08 ▸	1338C1	●700055	20	
2.0 i 16V	*RDRFJF, RWRFJF*	E	1997	EW10A	A	+		03/08 ▸	1338C1	●700055	20	
1.6 HDi	*RD9HZC, RW9HZC*	D	1560	DV6TED4	M	+		03/08 ▸	1338C1	●700055	20	
2.0 HDi	*RDRHRH, RWRHRH*	D	1997	DW10BTED4	M	+		03/08 ▸	1338C1	●700055	20	
2.0 HDi	*RDRHRJ, RWRHRJ*	D	1997	DW10BTED4	A	+		03/08 ▸	1338C1	●700055	20	
2.2 HDi	*RD4HTH, RW4HTH*	D	2179	DW12BTED4	M	+		03/08 ▸	1338C1	●700055	20	
C8												
2.0 HDi 16V	*EARHTB, EBRHTB*	D	1997	DW10ATED4	M	+/-		06/02 ▸	1338C1	●700055	20	
2.0 HDi 16V	*EAR/HME, EBR/HME/HWB*	D	1997	DW10ATED4	A	+/-		06/02 ▸ 10/06	1338C1	●700055	20	
2.2 HDi 16V	*EA4/HWB/HWG, EB4/HWB/HWG*	D	2179	DW12TED4	M	+/-		06/02 ▸ 06/06	1338C1	●700055	20	
2.2 HDi 16V	*EB4HTH*	D	2179	DW12BTED4	M			12/07 ▸	1338C1	●700055	20	
Evasion (94>98)												
1.8 i	*U6UE*	E	1761	XU7JP	M	+/-		07/96 ▸ 09/98	1920K9	700015	12X1.5	19
1.8 i	*U6UE*	E	1761	XU7JP	M	+		07/96 ▸ 09/98	133809	700000	14X1.25	19
2.0 i	*U6UB*	E	1998	XU10J2C	M	+/-		07/94 ▸ 09/98	1920K9	700015	12X1.5	19
2.0 i	*U6UB*	E	1998	XU10J2C	M	+		07/94 ▸ 09/98	133809	700000	14X1.25	19
2.0 i Turbo CT	*U6UA*	E	1998	XU10J2CTEL3	M	+		07/94 ▸ 09/98	133834	700008	14X1.25	19
1.9 TD	*U6U/C/J/J/8/J/T*	D	1905	XUD9TEF, XUD9BTF, XUD9TF	M	+		10/94 ▸ 09/98	133809	700000	14X1.25	19
2.1 TD 12V	*U6UW*	D	2088	XUD11BTE	M	+/-		04/96 ▸ 09/98	133878	700017	14X1.25	19
2.1 TD 12V	*U6UW*	D	2088	XUD11BTE	M	+		04/96 ▸ 09/98	133809	700000	14X1.25	19
Evasion (98>2002)												
1.8 i	*U6U/E/E/1*	E	1761	XU7JP	M	+/-		10/98 ▸ 05/02	1920K9	700015	12X1.5	19
1.8 i	*U6U/E/E/1*	E	1761	XU7JP	M	+		10/98 ▸ 05/02	133809	700000	14X1.25	19
2.0 i,2.0 i 16V	*AFR/FVB, U6U/B/B/T*	E	1998	XU10J4R, XU10J2C	M	+/-		10/98 ▸ 05/02	1920K9	700015	12X1.5	19
2.0 i,2.0 i 16V	*AFR/FVB, U6U/B/B/T*	E	1998	XU10J2C, XU10J4R	M	+		10/98 ▸ 05/02	133809	700000	14X1.25	19
2.0 i Turbo CT	*U6UA*	E	1998	XU10J2CTEL3	M	+		10/98 ▸ 05/02	133834	700008	14X1.25	19
1.9 TD	*U6U/C/C/T*	D	1905	XUD9BTF	M	+		10/98 ▸ 05/02	133809	700000	14X1.25	19
2.1 TD 12V	*U6U/W/W/T*	D	2088	XUD11BTE	M	+/-		10/98 ▸ 05/02	133878	700017	14X1.25	19

• **New** Nouveau **Nuevo** Novo **Nuovo** Nieuw **Neu** **Yeni** Новый Nou

Valeo

Water temperature sensor
Sonde à thermistance
Sensor de temperatura de água
Sensor de temperatura de água
Sensore temperatura acqua
Watertemperatuursensor
Wassertemperaturfühler

Czujnik temperatury wody
Snímač teploty vody
Comutator de temperatură
Su sicklik sensörü
датчик температуры воды

Type Ctr.		cc		AC		2 3	OE	Valeo	COD.	mm
CITROËN (.../...)										
Evasion (98>2002) (.../...)										
2.1 TD 12V U6U/W/W/T	D	2088	XUD11BTE	M	+		10/98 ▸ 05/02	133809	**700000**	14X1.25	19
Saxo (96>99)										
1.1 i,1.1 i GPL S0H/DYF/DZC/DZE/DZF/DZG ▸7727 S3HDZF, S1H/DYF/DZC/DZE DZF/DZG	E	1124	TU1M+	M	+/-		03/96 ▸ 01/98	1920K9	**700015**	12X1.5	19
1.4 i S0K/FXF/FXG/FXT, S1K/FXF/FXG/FXT	E	1360	TU3JP	M	+/-		03/96 ▸ 08/99	1920K9	**700015**	12X1.5	19
1.4 i S0K/FXD, S1K/FXD/FXT	E	1360	TU3JP	A	+/-		04/96 ▸ 08/99	1920K9	**700015**	12X1.5	19
1.6 i S0N/FZF/FZT, S6NFZF, S1N/FZF/FZT ▸7867	E	1587	TU5JP	M	+/-		03/96 ▸ 05/98	1920K9	**700015**	12X1.5	19
1.6 i S0NFZD, S1NFZD ▸7867	E	1587	TU5JP	A	+/-		06/96 ▸ 05/98	1920K9	**700015**	12X1.5	19
1.5 D S0V/JXB/JYF/JZC/JZE/JZF, S3VJZF S1V/JXB/JYF/JZC/JZE/JZF	D	1527	TUD5, TUD5B	M	+/-		05/96 ▸ 08/99	133878	**700017**	14X1.25	19
Saxo (99>)										
1.5 D S1VJXB, S3VJXB, S0V/JXB	D	1527	TUD5B	M	+/-		09/99 ▸	133878	**700017**	14X1.25	19
Xantia (93>97)										
1.6 i X12B	E	1580	XU5JP	M	+/-		08/93 ▸ 12/97	1920K9	**700015**	12X1.5	19
1.8 i,1.8 i 16V X11/A/E, X13H, X14C, X15C X12/A/E/F/H, X17A, X16/C G	E	1761	XU7JP4, XU7JP, XU7JB	M	+/-		03/93 ▸ 12/97	1920K9	**700015**	12X1.5	19
1.8 i X19B	E	1761	XU7JP	A	+/-		09/93 ▸ 12/97	1920K9	**700015**	12X1.5	19
2.0 i,2.0 i 16V X13/C/E, X14/A/C/F, X15/A F, X19/C/E	E	1998	XU10J2C, XU10J4R, XU10J4	M	+/-		03/93 ▸ 12/97	1920K9	**700015**	12X1.5	19
2.0 i X15E, X17B	E	1998	XU10J2C	A	+/-		09/93 ▸ 12/97	1920K9	**700015**	12X1.5	19
1.9 SD,1.9 TD X14H, X12/D, X17/E/E/T/F T/F, X18/A/E	D	1905	XUD9BTF,XUD9SD,XUD9TEF	M	+/-		06/93 ▸ 12/97	133855	●**700056**	14X1.25	19
2.1 TD,2.1 TD 12V X12G, X13G, X14G, X15G X16G, X18D, X11/G	D	2088	XUD11BTE	M	+/-		07/95 ▸ 12/97	133878	**700017**	14X1.25	19
Xantia (97>2002)										
1.6 i X1BFZF	E	1580	XU5JP	M	+/-		12/97 ▸ 05/02	1920K9	**700015**	12X1.5	19
1.8 i,1.8 i 16V X1L/6AG/FXF/FYB/FYC/FYF 1.8 i GPL 16V X2L/FXF/FYB/FYC/FYF	E	1761	XU7JB, XU7JP4, XU7JP	M	+/-		12/97 ▸ 05/02	1920K9	**700015**	12X1.5	19
1.8 i 16V X1LFYM	E	1761	XU7JP4	A	+/-		12/97 ▸ 05/02	1920K9	**700015**	12X1.5	19
2.0 i 16V X2RFVF, X7RFVF, X1R/FVF FVG	E	1998	XU10J4R	M	+/-		12/97 ▸ 05/02	1920K9	**700015**	12X1.5	19
2.0 i,2.0 i 16V X1R/FVU/FXM, X2R/FVM/FXM	E	1998	XU10J2C, XU10J4R	A	+/-		12/97 ▸ 05/02	1920K9	**700015**	12X1.5	19
2.0 HDi X2RHZF, X7RHZF, X1R/HZF	D	1997	DW10ATED	M	+/-		10/98 ▸ 05/02	1338A6	●**700054**	12X1.5	21
2.1 TD 12V X2P8CF, X7P8CF, X1P/8CF	D	2088	XUD11BTE	M	+/-		12/97 ▸ 05/02	133878	**700017**	14X1.25	19
XM (89>94)										
2.0,2.0 i Y3A/A/B/C/H/J/P/R/Z	E	1998	XU102C, XU10M, XU10J2	M	+/-		05/89 ▸ 06/94	1920C4	**700014**	12X1.5	19
2.0 i Y3A/C/H/P/R/Z	E	1998	XU10J2	M	+/-		05/89 ▸ 06/94	024246	**700019**	12X1.5	19
2.0 i Y3A/H/R/Z ▸6020	E	1998	XU10J2	M	+/-		05/93 ▸ 06/94	1920K9	**700015**	12X1.5	19
2.0 i Y3A/CA/HA/RA	E	1998	XU10J2	A	+/-		01/90 ▸ 06/94	1920C4	**700014**	12X1.5	19
2.0 i Y3A/CA/HA/RA	E	1998	XU10J2	A	+/-		01/90 ▸ 06/94	024246	**700019**	12X1.5	19
2.0 i Y3A/HA/RA ▸6020	E	1998	XU10J2	A	+/-		05/93 ▸ 06/94	1920K9	**700015**	12X1.5	19
3.0 i V6,3.0 i V6 24V Y3C/M/N/U	E	2963	ZPJ, ZPJ4	M	+/-		05/93 ▸ 06/94	1920C4	**700014**	12X1.5	19
3.0 i V6 Y3CNA	E	2963	ZPJ	A	+/-		07/93 ▸ 06/94	1920C4	**700014**	12X1.5	19
3.0 i V6,3.0 i V6 24V Y3A/D/G/L/W	E	2975	ZPJ, ZPJ4	M	+/-		05/89 ▸ 06/94	1920C4	**700014**	12X1.5	19
3.0 i V6 Y3A/GA/WA	E	2975	ZPJ	A	+/-		05/90 ▸ 06/94	1920C4	**700014**	12X1.5	19
2.1 TD Turbo D12 12V Y3A/F/K/T	D	2088	XUD11ATE	M	+/-		11/89 ▸ 06/94	133809	**700000**	14X1.25	19
2.1 TD Turbo D12 12V Y3ATA	D	2088	XUD11ATE	A	+/-		07/92 ▸ 06/94	133809	**700000**	14X1.25	19
2.1 D D12 Y3A/E/S	D	2138	XUD11A	M	+/-		09/89 ▸ 06/94	133809	**700000**	14X1.25	19
XM (94>2001)										
2.0 i Turbo CT Y4G/G/M	E	1998	XU10J2TE	M	+/-		07/94 ▸ 07/01	133834	**700008**	14X1.25	19
2.0 i 16V Y4GB, Y4TX, Y4C/Z	E	1998	XU10J4R	M	+/-		07/94 ▸ 07/01	1920K9	**700015**	12X1.5	19

• **New** Nouveau **Nuevo** Novo **Nuovo** Nieuw **Neu** **Yeni** Новый Nou

			cc			AC			OE	Valeo	COD.	mm	
CITROËN (.../...)													
XM (94>2001) (.../...)													
2.0 i 16V	*Y4GB, Y4TX, Y4CZ*	E	1998	XU10J4R	M	+		07/94 ▸ 07/01	133809	**700000**	14X1.25	19
2.0 i Turbo CT	*Y4T/S/T*	E	1998	XU10J2TE	A	+/-		07/94 ▸ 07/01	133834	**700008**	14X1.25	19
2.0 i 16V	*Y4T/U/V*	E	1998	XU10J4R	A	+/-		07/94 ▸ 07/01	1920K9	**700015**	12X1.5	19
2.0 i 16V	*Y4T/U/V*	E	1998	XU10J4R	A	+		07/94 ▸ 07/01	133809	**700000**	14X1.25	19
3.0 i V6,3.0 i V6 24V	*Y4G/N/R/U*	E	2963	ZPJ, ZPJ4	M	+/-		07/94 ▸ 05/99	1920C4	**700014**	12X1.5	19
3.0 i V6,3.0 i V6 24V	*Y4G/N/R/U*	E	2963	ZPJ4, ZPJ	M	+		07/94 ▸ 05/99	133809	**700000**	14X1.25	19
3.0 i V6	*Y4T/N/R*	E	2963	ZPJ	A	+/-		07/94 ▸ 05/99	1920C4	**700014**	12X1.5	19
3.0 i V6	*Y4T/N/R*	E	2963	ZPJ	A	+		07/94 ▸ 05/99	133809	**700000**	14X1.25	19
2.1 TD Turbo D12 12V	*Y4MZ, Y4G/X/Y/Z*	D	2088	XUD11BTE, XUD11ATE	M	+/-		07/94 ▸ 06/95	133809	**700000**	14X1.25	19
2.1 TD Turbo D12 12V	*Y4GZ, Y4MZ*	D	2088	XUD11BTE	M	+/-		07/95 ▸ 07/01	133878	**700017**	14X1.25	19
2.1 TD Turbo D12 12V	*Y4NW, Y4RN, Y4TD, Y4C/W*	D	2088	XUD11BTE, XUD11ATE	A	+/-		07/94 ▸ 06/97	133809	**700000**	14X1.25	19
2.1 TD Turbo D12 12V	*Y4CW, Y4RN*	D	2088	XUD11BTE	A	+/-		07/97 ▸ 07/01	133878	**700017**	14X1.25	19
2.1 D D12	*Y4G/V/W*	D	2138	XUD11A	M	+		07/94 ▸ 06/96	133809	**700000**	14X1.25	19
2.5 TD Turbo D	*Y4RM, Y4N/X/Y*	D	2446	DK5ATE	M	+/-		07/94 ▸ 07/01	133809	**700000**	14X1.25	19
2.5 TD Turbo D	*Y4RM, Y4N/X/Y*	D	2446	DK5ATE	M	+/-		07/94 ▸ 07/01	1920K9	**700015**	12X1.5	19
Xsara (97>2000)													
1.4 i	*N0K/FXF, N1K/FXB/FXF*	E	1360	TU3JP	M	+		07/97 ▸ 05/99	133855	●**700056**	14X1.25	19
1.4 i,1.4 i GPL	*N0K/FXB/FXF/FXG, N1K/FXB FXF/FXG, N2K/FXB/FXF*	E	1360	TU3JP	M			07/97 ▸ 08/00	1920K9	**700015**	12X1.5	19
1.6 i	*N1N/FZF/FZG*	E	1587	TU5JP	M	+		07/97 ▸ 05/99	133855	●**700056**	14X1.25	19
1.6 i ▸ 7874	*N0N/FZF, N2NFZF, N1N/FZF/FZG*	E	1587	TU5JP	M	+/-		07/97 ▸ 05/98	1920K9	**700015**	12X1.5	19
1.8 i,1.8 i 16V 1.8 i GPL 16V	*N0L/FXF/FYF, N1L/FXF/FYF FZU, N6LFYF, N2L/FXF/FYF*	E	1761	XU7JP, XU7JP4, XU7JB	M	+/-		07/97 ▸ 08/00	1920K9	**700015**	12X1.5	19
1.8 i	*N1LFZM, N2LFZM, N0L/FZM*	E	1761	XU7JP	A	+/-		07/97 ▸ 08/00	1920K9	**700015**	12X1.5	19
1.8 i 16V	*N1LFYF*	E	1761	XU7JP4	M	+		07/97 ▸ 08/00	133855	●**700056**	14X1.25	19
1.8 i	*N1LFZM*	E	1761	XU7JP	A	+		07/97 ▸ 08/00	133855	●**700056**	14X1.25	19
2.0 i 16V	*N2RFVF, N6RFSF, N1R/FVF*	E	1998	XU10J4RS, XU10J4R	M	+/-		01/98 ▸ 08/00	1920K9	**700015**	12X1.5	19
2.0 i 16V	*N1RFVM, N2RFVM*	E	1998	XU10J4R	A	+/-		06/98 ▸ 08/00	1920K9	**700015**	12X1.5	19
2.0 i 16V	*N1RFVF*	E	1998	XU10J4R	M	+		06/98 ▸ 08/00	133855	●**700056**	14X1.25	19
2.0 i 16V	*N1RFVM*	E	1998	XU10J4R	A	+		11/98 ▸ 08/00	133855	●**700056**	14X1.25	19
1.8 D	*N0A9AF*	D	1769	XUD7	M	+		07/98 ▸ 08/00	133855	●**700056**	14X1.25	19
1.8 D	*N2A9AF*	D	1769	XUD7	M			03/98 ▸ 08/00	133855	●**700056**	14X1.25	19
1.9 D,1.9 TD	*N1D/HYF/JYF*	D	1905	XUD9A,XUD9TE	M	+		07/97 ▸ 08/00	133855	●**700056**	14X1.25	19
1.9 D,1.9 SD,1.9 TD	*N0D/HYF/JYF, N6DHYF, N2D HVB/HWF/HYF/JYF*	D	1905	XUD9A,XUD9BSD,XUD9SD,XUD9TE	M			01/98 ▸ 08/00	133855	●**700056**	14X1.25	19
2.0 HDi ▸ 8513	*N1RHYF, N2RHYF, N6RHYF N0R/HYF*	D	1997	DW10TD	M	+/-		03/99 ▸ 02/00	1338A6	●**700054**	12X1.5	21
Xsara (2000>)													
1.4 i ▸ 9457	*N1KFWB, N2KFWB, N0K/FWB*	E	1360	TU3JP	M	+/-		09/00 ▸ 09/02	1338A6	●**700054**	12X1.5	21
1.6 i 16V ▸ 9457	*N1NFUB, N2NFUB, N0N/FUB*	E	1587	TU5JP4	M	+/-		09/00 ▸ 09/02	1338A6	●**700054**	12X1.5	21
1.6 i 16V ▸ 9457	*N1NFUN, N2NFUB, N0N/FUN*	E	1587	TU5JP4	A	+/-		09/00 ▸ 09/02	1338A6	●**700054**	12X1.5	21
2.0 i 16V	*N0RFSB*	E	1998	XU10J4RS	M			09/00 ▸ 01/05	133855	●**700056**	14X1.25	19
2.0 i 16V	*N0RFSB*	E	1998	XU10J4RS	M	+/-		09/00 ▸	133809	**700000**	14X1.25	19
1.4 HDi	*N18HZB, N28HZB, N08/HZB*	D	1398	DV4TD	M	+/-		01/03 ▸ 08/05	1338C1	●**700055**	20	
2.0 HDi	*N0R/HYB/HZB, N1R/HYB/HZB N2R/HYB/HZB*	D	1997	DW10ATED,DW10TD	M	+/-		09/00 ▸ 08/05	1338C1	●**700055**	20	
2.0 HDi	*N1RHZN, N2RHZN, N0R/HZN*	D	1997	DW10ATED	A	+/-		08/01 ▸ 08/05	1338C1	●**700055**	20	
Xsara Picasso													
1.6 i ▸ 9491	*CHNFVB*	E	1587	TU5JP	M	+/-		01/02 ▸ 11/02	1338A6	●**700054**	12X1.5	21
1.6 HDi 16V	*CH9/HXC/HYB/HZC*	D	1560	DV6ATED4,DV6TED4	M	+/-		03/04 ▸	1338C1	●**700055**	20	
2.0 HDi	*CHRHYA*	D	1997	DW10TD	M	+/-		12/99 ▸ 12/05	1338C1	●**700055**	20	
2.0 HDi	*CHRHYB*	D	1997	DW10TD	M	+		12/99 ▸ 12/05	1338C1	●**700055**	20	
CITROËN													
Berlingo (96>2002)													
1.1 i ▸ 7729	*MAH/DZA/DZD, MFHDZE, MBH/DZE/DZF*	E	1124	TU1M+	M	+/-		07/96 ▸ 01/98	1920K9	**700015**	12X1.5	19

• **New** Nouveau **Nuevo** Novo **Nuovo** Nieuw **Neu** **Yeni** Новый Nou

		cc		AC				OE	Valeo	COD.	mm	
CITROËN (.../...)												
Berlingo (96>2002) (.../...)												
1.1 i	MBHFXW, MFHFXB, MAH/KXB	E	1124	TU1JP	M	+/-		01/01 ▸ 12/02	1338A6	●700054	12X1.5	21
1.4 i,1.4 i GPL	MBK/6CG/FWB/FXF, MCK/FWB FXF, MFK/6CG/FWB/FXB/FXF	E	1360	TU3JP	M	+/-		07/96 ▸ 12/02	1920K9	700015	12X1.5	19
1.4,1.4 i ▸8210	MCKFXF, MBK/5AG/FXF, MFK 5AG/FXB/FXF	E	1360	TU3.2,TU3JP	M	+/-		07/96 ▸ 12/02	133855	●700056	14X1.25	19
1.6 i 16V	MFN/FUB/FUF	E	1587	TU5JP4	M	+/-		12/00 ▸ 12/02	1338A6	●700054	12X1.5	21
1.8 i	MFLFXF	E	1761	XU7JB	M	+		07/97 ▸ 12/02	133855	●700056	14X1.25	19
1.8 i	MFLFXF	E	1761	XU7JB	M	+		07/97 ▸ 12/02	133809	700000	14X1.25	19
1.8 D	MBA/9AE/PAG, MEA9AE, MFA9AE, MCA 9AE/9AG	D	1769	XUD7	M	+/-		07/96 ▸ 12/02	133878	700017	14X1.25	19
1.8 D	MBA/9AE/PAG, MEA9AE, MFA9AE, MCA 9AE/9AG	D	1769	XUD7	M	+		07/96 ▸ 12/02	133809	700000	14X1.25	19
1.9 D	MCD9BE, MED9BE, MFD9BE, MBD/9BE	D	1905	XUD9A	M	+/-		07/96 ▸ 12/02	133878	700017	14X1.25	19
1.9 D	MCD9BE, MED9BE, MBD/9BE, MFD/9BE JYF	D	1905	XUD9A	M	+		07/96 ▸ 12/02	133809	700000	14X1.25	19
2.0 HDi 9156 ▸	MBR/HYB, MCR/HYB/HYF, MFR HYB/HYF	D	1997	DW10TD	M	+/-		12/01 ▸ 12/02	1338C1	●700055	20	
Berlingo (2002>)												
1.6 HDi 16V	GB9/HWC/HXC, GC9/HW/HXC GJ9/HW/HXC	D	1560	DV6ATED4,DV6BTED4	M	+/-		01/06 ▸ 05/08	1338C1	●700055	20	
2.0 HDi	GCRHYB, GERHYB, GBR/HYB GJR/HYB/HYK	D	1997	DW10TD	M	+/-		12/02 ▸ 05/08	1338C1	●700055	20	
Berlingo (B9) (2008>)												
1.6 HDi 16V	7A9/HTC/HXC, 7B9/HTC/HXC 7J9/HTC/HXC/HZC	D	1560	DV6ATED4,DV6AUTED4,DV6BTED4 DV6BUTED4,DV6TED4	M	+/-		05/08 ▸	1338C1	●700055	20	
C15												
1.1,1.1 i	VDP/X/Y/Z, VDVN, VDS/C/E F/V/Z	E	1124	TU1M, TU1	M	-		07/88 ▸ 02/01	024246	700019	12X1.5	19
1.4,1.4 i	VD*/, VDS/A/B/C/G/J	E	1360	TU3TR, TU3.2, TU3M, TU3A	M	-		05/88 ▸ 02/01	024246	700019	12X1.5	19
Dispatch (2004>2006)												
2.0 HDi	BWRHZB	D	1997	DW10BTED,DW10BTED+L4	M			01/04 ▸ 12/06	1338A6	●700054	12X1.5	21
Dispatch (2007>)												
1.6 HDi 16V	XT9HUC, XU9HUC, XV9HUC XW9HUC, XS9/HUC	D	1560	DV6UTED4	M	+/-		01/07 ▸	1338C1	●700055	20	
2.0 HDi 16V	XSR/HKH, XURHKH, XVRHKH XWRHKH, XTR/HKH/HRH	D	1997	DW10BTED4,DW10UTED4	M	+/-		01/07 ▸	1338C1	●700055	20	
Jumper (94>2001)												
2.0 i	231/A22/A24/A32/B22/B24/C22/C24/G22 G32/H22/H32/V22/V24, 232/B22/F22 G22/H22/J22/K22/L22/N22/V22/V24 321A34, 233/B22/D22/F22/G22/H22 J22/K22/L22/N22	E	1998	XU10J2U	M	+/-		02/94 ▸ 12/01	1920K9	700015	12X1.5	19
Jumper (2002>2006)												
2.0 i	ZAT/MF, ZBT/MF/MP, ZCT/MF/MM	E	1998	XU10J2U	M	+/-		01/02 ▸ 06/06	133897	●700054	12X1.5	21
2.8 HDi	ZAP/MF/MP, ZCMNCA, ZBP/MD MF/MH/MP, ZCP/MD/MF/MH/MM	D	2798	F28TDCR	M	+/-		01/02 ▸ 06/06	1338C7	700028	12X1.5	19
Jumper II (2006>)												
3.0 HDi 16V	YCDMF, YBD/MD/MF	D	2999	F30DT	M	+/-		07/06 ▸	1338F9	700028	12X1.5	19
Jumpy (95>2003)												
1.6 i	U6U/G/N/N/R/T/T/5/T/6/T/8/T/9	E	1581	160A	M			09/95 ▸ 12/03	024246	700019	12X1.5	19

• **New** Nouveau **Nuevo** Novo **Nuovo** Nieuw **Neu** **Yeni** Новый Nou

			CC		AC			OE	Valeo	COD.	mm	
CITROËN (.../...)												
Jumpy (95>2003) (.../...)												
1.9 D,1.9 TD	*BBDHXA, BEDHXA, BSDHXA BUDHXA, BWDHXA, BYDHXA BZDHXA, BAD/HXA, U6K/S/U U/R, U6U/F/H/K/L/P/R/R/8 R/9/S/5/S/6/S/8/S/9/U/U/9*	D	1905	XUD9BTF, XUD9TF, XUD9A	M	+		09/95 ▸ 12/03	133809	**700000**	14X1.25	19
1.9 D,1.9 TD ▸ 7846	*BBDHXA, BAD/HXA, U6U/F/K L/P/R/R/8/R/9/S/5/S/6/S/8 S/9/U/U/9*	D	1905	XUD9BTF, XUD9TF, XUD9A	M	+/-		09/95 ▸ 05/98	133878	**700017**	14X1.25	19
1.9 D,1.9 TD	*BBDHXA, BEDHXA, BSDHXA BUDHXA, BWDHXA, BYDHXA BZDHXA, BAD/HXA, U6K/S/U U/R, U6U/F/H/K/L/P/R/R/8 R/9/S/5/S/6/S/8/S/9/U/U/9*	D	1905	XUD9A,XUD9BTF,XUD9TF	M	+		09/95 ▸ 12/03	133855	●**700056**	14X1.25	19
2.0 HDi 16V ▸ 9268	*BTRHWB, BZRHWB, BAR/HWB*	D	1997	DW10ATED4	M	+/-		03/02 ▸ 12/03	1338C1	●**700055**	20	
2.0 HDi,2.0 HDi 16V ▸ 9267	*BBRHZA, BCRHZB, BAR/HWB HXA/HZA/HZB, BDR/HXB/HZA HZB, BER/HXA/HZA/HZB BTRHWB, BURHZB, BWRHZB BSR/HXA/HXB/HZB, BYR/HXA HXB/HZB, BZR/HWB/HXA/HXB*	D	1997	DW10ATED,DW10ATED4,DW10BTED DW10CTED	M	+/-		09/00 ▸ 12/03	1338A6	●**700054**	12X1.5	21
Jumpy (2004>2006)												
2.0 HDi,2.0 HDi 16V	*BBR/HXB/HZB, BER/HXB/HZB BURHZB, BSR/HXB/HZB, BWR HXB/HZB, BZRHWB, BYR/HWB HXB/HZB*	D	1997	DW10ATED4,DW10BTED DW10BTED+L4	M	+/-		01/04 ▸ 12/06	1338A6	●**700054**	12X1.5	21
2.0 HDi 16V	*BYRHWB*	D	1997	DW10ATED4	M	+/-		01/04 ▸ 12/06	1338C1	●**700055**	20	
Jumpy (2007>)												
1.6 HDi 16V	*XC9HUC, XS9HUC, XT9HUC XU9HUC, XV9HUC, XW9HUC XA9/HUC*	D	1560	DV6UTED4	M	+/-		01/07 ▸	1338C1	●**700055**	20	
2.0 HDi 16V	*XAR/HKH/HRH, XCR/HKH/HRH XSRHKH, XDR/HKH/HRH XURHKH, XVRHKH, XWRHKH XTR/HKH/HRH*	D	1997	DW10BTED4,DW10UTED4	M	+/-		01/07 ▸	1338C1	●**700055**	20	
Nemo												
1.4 HDi	*AA8HSC*	D	1398	DV4TED	M	+/-		12/07 ▸	1338C1	●**700055**	20	
Relay (2002>2006)												
2.0 i	*ZATMF, ZBTMF*	E	1998	XU10J2U	M	+/-		01/02 ▸ 06/06	133897	●**700054**	12X1.5	21
FIAT												
Barchetta (95>2003)												
1.8 i 16V	*183/SA1A/SB1A*	E	1747	183A1.000, 188A6.000	M			05/95 ▸	7588802	**700002**	16.5X1	19
Brava												
1.4 i 12V	*182/BA1A/BG1A*	E	1372	182A3.000, 182A5.000	M	+/-		06/95 ▸ 09/98	5972332	**700019**	12X1.5	19
1.4 i 12V	*182/BA1A/BG1A*	E	1372	182A3.000, 182A5.000	M			06/95 ▸ 09/98	7588802	**700002**	16.5X1	19
1.6 i 16V	*182/B01A/BB1A/BH1A*	E	1581	182A6.000, 182A4.000 182A4.027	M			06/95 ▸	7588802	**700002**	16.5X1	19
1.6 i 16V	*182B01A*	E	1581	182A4.027	M			10/98 ▸	46414596	**700024**	12X1.5	19
1.6 i 16V	*182BB1A*	E	1581	182A4.000	A			10/96 ▸ 09/98	7588802	**700002**	16.5X1	19
1.6 i 16V	*182BU1A*	E	1596	182B6.000	M			10/98 ▸	7588802	**700002**	16.5X1	19
1.8 i 16V	*182BC1A*	E	1747	182A2.000	M			06/95 ▸ 07/99	7588802	**700002**	16.5X1	19
1.8 i 16V	*182BC1A*	E	1747	182A2.000	M			10/98 ▸	7738223	**700022**	12X1.5	19
1.9 TD	*182/B11A/BI1A*	D	1910	182A8.000	M	+/-		03/96 ▸	7735919	**700010**	16X1.5	19
1.9 JTD	*182BR1A*	D	1910	182B4.000	M	+/-		10/98 ▸	46472179	**700028**	12X1.5	19
1.9 TD	*182/BF1A/BI1A*	D	1910	182A8.000, 182A7.000	M			03/96 ▸ 09/98	7588802	**700002**	16.5X1	19

• **New** Nouveau **Nuevo** Novo **Nuovo** Nieuw **Neu** **Yeni** Новый Nou

Valeo

Water temperature sensor
Sonde à thermistance
Sensor de temperatura de água
Sensor de temperatura de água
Sensore temperatura acqua
Watertemperatuursensor
Wassertemperaturfühler

Czujnik temperatury wody
Snímač teploty vody
Comutator de temperatură
Su sicklik sensörü
датчик температуры воды

			cc		AC			OE	Valeo	COD.	mm
FIAT (.../...)											
Brava (.../...)											
1.9 TD	*182BF*	D	1910	182A7.000	M			10/98 ▸	7738223	**700022**	12X1.5	19
1.9 D	*182BE1B*	D	1929	160A7.000	M			06/95 ▸ 09/98	7588802	**700002**	16.5X1	19
Bravo (95>98)											
1.4 i 12V	*182/AA1A/AGIA*	E	1372	182A3.000, 182A5.000	M	+/-		06/95 ▸ 09/98	5972332	**700019**	12X1.5	19
1.4 i 12V	*182/AA1A/AGIA*	E	1372	182A3.000, 182A5.000	M			06/95 ▸ 09/98	7588802	**700002**	16.5X1	19
1.6 i 16V	*182/AB1A/ABIA/AHIA*	E	1581	182A4.000, 182A6.000	M			06/95 ▸ 09/98	7588802	**700002**	16.5X1	19
1.6 i 16V	*182AB11*	E	1581	182A4.000	A			10/96 ▸ 09/98	7588802	**700002**	16.5X1	19
1.8 i 16V	*182/AC1A/AC1B*	E	1747	182A2.000	M			06/95 ▸ 09/98	7588802	**700002**	16.5X1	19
2.0 i 20V	*182AD1A*	E	1998	182A1.000	M			06/95 ▸ 09/98	7588802	**700002**	16.5X1	19
1.9 TD	*182AI1A*	D	1910	182A8.000	M	+/-		03/96 ▸ 09/98	7735919	**700010**	16X1.5	19
1.9 TD	*182/AF1A/AI1A*	D	1910	182A8.000, 182A7.000	M	+/-		03/96 ▸ 09/98	46477022	**700021**	12X1.5	19
1.9 TD	*182/AF1A/AI1A*	D	1910	182A7.000, 182A8.000	M			03/96 ▸ 09/98	7588802	**700002**	16.5X1	19
1.9 D	*182/AE1A/AE1B*	D	1929	160A7.000	M			06/95 ▸ 09/98	7588802	**700002**	16.5X1	19
Bravo (98>2006)											
1.2 i 16V	*182/AP1A/AT1A*	E	1242	188A5.000, 182B2.000	M			10/98 ▸	7588802	**700002**	16.5X1	19
1.6 i 16V	*182AB1A*	E	1581	182A4.000	M			10/98 ▸	7588802	**700002**	16.5X1	19
1.6 i 16V	*182AB11*	E	1581	182A4.000	A			10/98 ▸	7588802	**700002**	16.5X1	19
1.6 i 16V	*182AU1A*	E	1596	182B6.000	M			10/98 ▸	7588802	**700002**	16.5X1	19
1.8 i 16V	*182/AC1A/AC1B*	E	1747	182A2.000	M			10/98 ▸	7738223	**700022**	12X1.5	19
1.8 i 16V ▸ 4873621	*182/AC1A/AC1B*	E	1747	182A2.000	M			10/98 ▸ 07/99	7588802	**700002**	16.5X1	19
2.0 i 20V	*182AQ1A*	E	1998	182B7.000	M			10/98 ▸	7588802	**700002**	16.5X1	19
1.9 TD	*182AI1A*	D	1910	182A8.000	M	+/-		10/98 ▸	7588802	**700002**	16.5X1	19
1.9 JTD	*182AR1A*	D	1910	182B4.000	M	+/-		10/98 ▸	46472179	**700028**	12X1.5	19
1.9 TD	*182AI1A*	D	1910	182A8.000	M	+/-		10/98 ▸	7735919	**700010**	16X1.5	19
1.9 TD	*182AF1A*	D	1910	182A7.000	M			10/98 ▸	7738223	**700022**	12X1.5	19
Cinquecento											
700,700 i	*170/AA43/AD43*	E	704	170A.000, 170A.046	M			01/92 ▸ 02/98	7591297	**700002**	16.5X1	19
900,900 i	*170/AF53/AG53/BF53*	E	899	1170A1.046, 1170A1.000	M	+/-		01/92 ▸ 02/98	46477022	**700021**	12X1.5	19
900,900 i	*170/AB53/AC53*	E	903	170A1.046, 170A1.000	M	+/-		01/92 ▸ 02/98	46477022	**700021**	12X1.5	19
900,900 i	*170/AB53/AC53*	E	903	170A1.000, 170A1.046	M			01/92 ▸ 02/98	7588802	**700002**	16.5X1	19
1.1 i	*170AH53*	E	1108	176B2.000	M	+/-		10/94 ▸ 02/98	46477022	**700021**	12X1.5	19
1.1 i	*170AH53*	E	1108	176B2.000	M			10/94 ▸ 02/98	7588802	**700002**	16.5X1	19
Croma											
2.0 TDiD	*154LR55*	D	1929	154D1.000	M	+/-		11/92 ▸ 12/96	7663320	**700027**	12X1.5	19
2.5 TD	*154LH55*	D	2500	8144-97	M	+/-		01/91 ▸ 12/92	7588856	**700007**	14X1.5	19
2.5 TD	*154/LI55/LL55*	D	2500	8144-97S, 8144-97Y	M	+/-		01/91 ▸ 08/96	4850371	**700021**	12X1.5	19
2.5 TD	*154LH45*	D	2500	8144-97	A	+/-		01/91 ▸ 12/92	7588856	**700007**	14X1.5	19
Marea											
1.4 i 12V	*185/AXA/BXA*	E	1372	182A3.000	M	+/-		07/96 ▸ 01/99	5972332	**700019**	12X1.5	19
1.6 i 16V 1.6 i Bipower 16V	*185/AXH1/AXL1*	E	1581	185A3.000, 182B5.098	M			02/99 ▸	7588802	**700002**	16.5X1	19
1.6 i 16V	*185/AXR1/BXR1*	E	1596	182B6.000	M			02/99 ▸	7588802	**700002**	16.5X1	19
1.6 i 16V	*185/AXR1/BXR1*	E	1596	182B6.000	A			02/99 ▸	7588802	**700002**	16.5X1	19
2.0 i 20V	*185/AXD/BXD*	E	1998	182A1.000	M	+/-		07/96 ▸ 01/99	5972332	**700019**	12X1.5	19
1.9 TD	*185/AXF/AXF1/BXF/BXF1*	D	1910	182A8.000	M	+/-		07/96 ▸	7735919	**700010**	16X1.5	19
1.9 TD	*185/AXF1/BXF1*	D	1910	182A8.000	M	+/-		02/99 ▸	46477022	**700021**	12X1.5	19
1.9 JTD	*185/AXN1/BXN1*	D	1910	182B4.000	M	+/-		02/99 ▸	46472179	**700028**	12X1.5	19
2.4 JTD	*185/AXQ1/BXQ1*	D	2387	185A6.000	M	+/-		02/99 ▸	46472179	**700028**	12X1.5	19
Multipla (98>2003)											
1.9 JTD	*186AXB1*	D	1910	182B4.000	M	+/-		11/98 ▸	46472179	**700028**	12X1.5	19
Palio											
1.6 i 16V	*178DXD1*	E	1581	178B3.000	M	+/-		09/97 ▸	46414596	**700024**	12X1.5	19
1.7 D,1.7 TD	*178/BXN1/DXH1*	D	1697	176B3.000, 176A3.000	M	+/-		09/97 ▸ 02/01	7735919	**700010**	16X1.5	19
Panda											
750	*141/AI43/AI53*	E	769	141B.000	M			04/91 ▸ 07/92	4448131	**700002**	16.5X1	19

• **New** Nouveau **Nuevo** Novo **Nuovo** Nieuw **Neu** **Yeni** Новый Nou

Type Ctr.		CC		AC		2 3	OE	Valeo	COD.	mm
FIAT (.../...)										
Panda (.../...)										
900 ie *141AT53*	E	899	1170A1.046	M			04/92 ▸ 08/03	4448131	**700002**	16.5X1	19
900 ie *141/AT53/GT53/GT5F*	E	899	1170A1.046F, 1170A1.046	M			04/92 ▸ 08/03	46477022	**700021**	12X1.5	19
900 *141AL53*	E	903	146A.048	M			04/91 ▸ 03/92	4448131	**700002**	16.5X1	19
1000 ie *141/AO43/AO53*	E	999	156A2.246	M	+/-		01/93 ▸ 08/03	5972332	**700019**	12X1.5	19
1000 *141AB53*	E	999	156A2.000	M			04/91 ▸ 12/92	7588802	**700002**	16.5X1	19
1000 ie *141AJ53*	E	999	141C2.000	M			01/93 ▸ 08/03	46477022	**700021**	12X1.5	19
1100 ie *141AS53*	E	1108	156C.046	M	+/-		04/91 ▸ 01/93	5972332	**700019**	12X1.5	19
1100 ie *141/AK53/AS53/AW53/MK53*	E	1108	187A1.000, 156C.046 176B2.000	M			04/91 ▸ 08/03	46477022	**700021**	12X1.5	19
1100 ie *141AS13*	E	1108	156C.046	A	+/-		04/91 ▸ 01/93	5972332	**700019**	12X1.5	19
1100 ie *141/AK13/AS13*	E	1108	156C.046, 176B2.000	A			04/91 ▸ 08/03	46477022	**700021**	12X1.5	19
Panda (2003>)										
1.1 i *169/AXA1/CXA1*	E	1108	187A1.000	M			09/03 ▸	46477022	**700021**	12X1.5	19
Punto (93>99)										
55 ED,55 EL 6 speed,55 SX 55 SX 6 speed *176/AO53/AO55/AO63*	E	1108	176B2.000	M	-		10/94 ▸ 09/99	7588802	**700002**	16.5X1	19
60 SX,85 ELX,85 Sporting *176/AR53/AR55/AV52/AV53 AV55/BV53*	E	1242	176B4.000, 176B9.000	M	+/-		06/95 ▸	7588802	**700002**	16.5X1	19
60 ELX,60 SX *176/AR12/AR13/AR15*	E	1242	176B4.000	A	+/-		06/95 ▸ 09/99	7588802	**700002**	16.5X1	19
GT *176/AD53/AS53*	E	1372	176A4.000, 176B6.000	M			07/93 ▸ 09/99	5972332	**700019**	12X1.5	19
90 ELX,ELX *176/AL52/BL52/BL53/BL55*	E	1581	176A9.000	M	+/-		11/93 ▸ 04/97	7778980	**700018**	12X1.5	19
70 ELX,70 SX,ELX,S,SX *176/AF/AF53/AF55/AF5C AF5F/AG53/CG/CG53/CG55*	D	1697	176A3.000, 176A3.000F 176A5.000	M			07/93 ▸ 09/99	7735919	**700010**	16X1.5	19
60 Diva,60 SX,ELX,SX *176/AF/AF53/AF55/AF5F AG53/AT53/AT55*	D	1697	176A3.000, 176B7.000 176A5.000	M			07/93 ▸ 09/99	7588802	**700002**	16.5X1	19
Seicento										
0.9 i *187/AXA/AXA1*	E	899	1170A1.046F	M			03/98 ▸ 08/00	7588802	**700002**	16.5X1	19
0.9 i *187AXA1*	E	899	1170A1.046F	A			03/98 ▸ 08/00	7588802	**700002**	16.5X1	19
1.1 i *187/AXB1/CXB*	E	1108	176B2.000	M			03/98 ▸ 08/00	46477022	**700021**	12X1.5	19
Siena (97>2001)										
1.7 D *178CXN*	D	1697	176B3.000	M	+/-		09/98 ▸ 12/01	7735919	**700010**	16X1.5	19
1.7 TD *178CYB1*	D	1697	176B7.000	M	+/-		06/99 ▸ 12/01	46477022	**700021**	12X1.5	19
Tempra										
1.9 TD,1.9 TDs *159/AI54/AI55/AI5C/AL AO54/AO55*	D	1929	160D1.000, 160A6.046 160A6.000	M	+/-		11/89 ▸ 1996	7663320	**700027**	12X1.5	19
1.9 TD *159/AI54/AI55/AO54/AO55 BI54/BI55*	D	1929	160D1.000, 160A6.000	M	+/-		03/93 ▸ 1996	7735919	**700010**	16X1.5	19
Tipo										
1.1 *160/AA45/AA55*	E	1108	160A3.000	M			01/88 ▸ 05/91	7588883	**700041**	14X1.25	19
1.1 *160/AA45/AA55*	E	1108	160A3.000	M			05/91 ▸ 02/93	7588882	**700002**	16.5X1	19
1.9 TD *160EL55*	D	1929	160D1.000	M	+/-		03/93 ▸ 1995	7735919	**700010**	16X1.5	19
1.9 TD,1.9 TDs *160/AO55/AO5C/AW55/EL55*	D	1929	160B6.046, 160A6.000 160D1.000	M			01/88 ▸ 1995	7663320	**700027**	12X1.5	19
Ulysse (94>98)										
1.8 ie *220/BB5/BB5U*	E	1761	LFW	M	+		03/96 ▸ 09/98	9601842680	**700000**	14X1.25	19
1.8 ie *220/BB5/BB5U*	E	1761	LFW	M	-		03/96 ▸ 09/98	9613147080	**700015**	12X1.5	19
2.0 ie,2.0 ie Turbo *220/AC5/AC5U/AD5/CD5*	E	1998	RFU, RGX	M	+/-		06/94 ▸ 09/98	9616455680	**700015**	12X1.5	19
2.0 ie *220/AC5/AC5U*	E	1998	RFU	M	+		06/94 ▸ 09/98	9601842680	**700000**	14X1.25	19
2.0 ie Turbo *220/AD5/CD5*	E	1998	RGX	M	+		06/94 ▸ 09/98	9616455480	**700008**	14X1.25	19
2.0 ie *220/AC5/AC5U*	E	1998	RFU	M	+		06/94 ▸ 09/98	9621000680	**●700056**	14X1.25	19
1.9 TD *220/AE5/AE5U/AH5/AHX*	D	1905	XUD9TEF/L3, XUD9TEF/K, XUD9TEF/Y	M	+		06/94 ▸ 09/98	9601842680	**700000**	14X1.25	19
1.9 TD *220/AE5/AE5U/AH5/AHX*	D	1905	XUD9TEF/K, XUD9TEF/Y, XUD9TEF/L3	M			06/94 ▸ 09/98	9618572580	**700017**	14X1.25	19
1.9 TD *220/AE5/AE5U/AH5/AHX*	D	1905	XUD9TEF,XUD9TEF/K,XUD9TEF/L3	M	+		06/94 ▸ 09/98	9621000680	**●700056**	14X1.25	19
2.1 TD *220/AJ5/AJ5U*	D	2088	P8C	M	+/-		03/96 ▸ 09/98	9618572580	**700017**	14X1.25	19
2.1 TD *220/AJ5/AJ5U*	D	2088	P8C	M	+		03/96 ▸ 09/98	9601842680	**700000**	14X1.25	19

• **New** Nouveau **Nuevo** Novo **Nuovo** Nieuw **Neu** **Yeni** Новый Nou

			cc			AC			OE	Valeo	COD.	mm
FIAT (.../...)												
Ulysse (94>98) (.../...)												
2.1 TD	220/AJ5/AJ5U	D	2088	P8C	M	+/-		03/96 ▸ 09/98	9621000680	●700056	14X1.25	19
Ulysse (98>2002)												
1.8 ie	220BB5	E	1761	LFW	M	+/-		10/98 ▸ 08/02	9613147080	700015	12X1.5	19
1.8 ie	220BB5	E	1761	LFW	M	+		10/98 ▸ 08/02	9601842680	700000	14X1.25	19
2.0 ie,2.0 ie 16V 2.0 ie Turbo	220/AC5/AD5/AL5/AV5/CD5	E	1998	RFU, RFV, RGX	M	+/-		10/98 ▸ 08/02	9616455680	700015	12X1.5	19
2.0 ie,2.0 ie 16V	220/AC5/AL5/AV5	E	1998	RFV, RFU	M	+/-		10/98 ▸ 08/02	9601842680	700000	14X1.25	19
2.0 ie,2.0 ie 16V	220/AC5/AL5/AV5	E	1998	RFU,RFV	M	+		10/98 ▸ 08/02	9621000680	●700056	14X1.25	19
1.9 TD	220/AH5/AHX	D	1905	XUD9TEF/L3	M	+/-		10/98 ▸ 08/02	9618572580	700017	14X1.25	19
1.9 TD	220/AH5/AHX	D	1905	XUD9TEF/L3	M	+		10/98 ▸ 08/02	9601842680	700000	14X1.25	19
1.9 TD	220/AE5/AH5/AHX	D	1905	XUD9TEF/K,XUD9TEF/L3	M	+		10/98 ▸ 08/02	9621000680	●700056	14X1.25	19
2.1 TD	220AJ5	D	2088	P8C	M	+/-		10/98 ▸ 08/02	9618572580	700017	14X1.25	19
2.1 TD	220AJ5	D	2088	P8C	M			10/98 ▸ 08/02	9601842680	700000	14X1.25	19
2.1 TD	220AJ5	D	2088	P8C	M	+		10/98 ▸ 08/02	9621000680	●700056	14X1.25	19
Uno (89>95)												
45,45 S 121897 ▸	146/EC43/EC45/EC4C/EC53 EC55/EC5C	E	999	156A2.000	M			▸ 12/93	7588802	700002	16.5X1	19
45,45 S ▸ 121897	146/EC43/EC45/EC4C/EC53 EC55/EC5C	E	999	156A2.000	M			10/89 ▸	7548005	700041	14X1.25	19
- 121897 ▸	146/ET53/ET55	E	1108	156C.046	M			▸ 12/93	7588802	700002	16.5X1	19
- ▸ 121897	146/ET53/ET55	E	1108	156C.046	M			10/89 ▸	7548005	700041	14X1.25	19
60	146EG15	E	1116	146A4.048	A			07/90 ▸ 12/92	4448131	700002	16.5X1	19
75S,75SX	146/EM53/EM55	E	1498	149C1.000	M			10/89 ▸ 12/93	4448131	700002	16.5X1	19
-	146/EM13/EM15	E	1498	149C1.000	A			10/89 ▸ 12/93	4448131	700002	16.5X1	19
45	146/EN53/EN55	D	1301	146B1.000	M			10/89 ▸ 03/92	4414600	700002	16.5X1	19
70,70 S	146/ES53/ES55/ES5C	D	1367	146B3.000	M	+/-		10/89 ▸ 07/93	7588802	700002	16.5X1	19
60	146/EO53/EO55	D	1697	146B2.000	M			10/89 ▸ 08/95	4448131	700002	16.5X1	19
-	146/EP53/EP55	D	1929	149B5.046	M	+/-		07/90 ▸ 03/94	4448131	700002	16.5X1	19
Uno Mondo (98>)												
1.0 i	146EE55	E	999	156A2.246	M	+/-		01/98 ▸	5972332	700019	12X1.5	19
1.0 i	146EE55	E	999	156A2.246	M			01/98 ▸	7588802	700002	16.5X1	19
1.1	146052, 158350	E	1108	160A3.000	M			01/98 ▸	7588802	700002	16.5X1	19
1.4	146EK55	E	1372	146C2.028	M			01/98 ▸	7588802	700002	16.5X1	19
1.7 D	158351, 146E055, 146/E0	D	1697	146B2.000	M			01/98 ▸	7588802	700002	16.5X1	19
FIAT												
Doblo (2000>2003)												
1.6 i 16V	223AXD1	E	1596	182B6.000	M			10/01 ▸ 12/03	7588802	700002	16.5X1	19
Doblo (2004>2005)												
1.6 GNV 16V	223AXD1	E	1596	182B6.000	M			01/04 ▸	7588802	700002	16.5X1	19
Doblo II (2006>)												
1.6 GNV 16V	223AXD1	E	1596	182B6.000	M			01/06 ▸	7588802	700002	16.5X1	19
Doblo Cargo (2000>2003)												
1.6 i 16V	223ZXD1	E	1596	182B6.000	M			10/01 ▸	7588802	700002	16.5X1	19
Doblo Cargo II (2006>)												
1.6 GNV	223WXD1	G	1596	182B6.000-GNV	M			01/06 ▸	7588802	700002	16.5X1	19
Ducato (230) (94>2001)												
2.0,2.0 i	230/AGMF/AGMP/AGMS/AGMT AGMU/AGWT/AHMF/AHMP/BGMA BGMC/BGMD/BGMF/BGMH/BGMN BGMP/BGMQ/BGMS/BGWN/BGWS BGWT/CGMA/CGMC/CGMD/CGMF CGMH/CGMM/CGMN	E	1998	XU10J2U/W2, XU102CU/W2	M	-		02/94 ▸ 12/01	9613147080	700015	12X1.5	19

• **New** Nouveau **Nuevo** Novo **Nuovo** Nieuw **Neu** **Yeni** Новый Nou

			CC		AC			OE	Valeo	COD.	mm
FIAT (.../...)											
Ducato (230) (94>2001) (.../...)											
1.9 D,1.9 TD	*230/0NMQ/AMMC/AMMD/AMMF AMMQ/ANMA/ANMF/ANMP/ANMQ BLMA/BNMA/BNMF/BNMM/BNMQ ENMF*	D	1905	XUD9TEF/W3, XUD9A/K	M	+		06/98 ▸ 12/01	9601842680	**700000**	14X1.25	19
1.9 D,1.9 TD	*230/AAMA/AAMB/AAMD/AAMF AAMQ/AAMR/ABMA/ABMB/ABMD ABMF/ABMP/ABMQ/ABMR/ACMA ACMD/ACMF/BBMA/BBMD/BBMF BBMN/BBMP/BBMQ/BBMR/BCMA BCMD/BCMF/BCMQ/EAMF/EBMF*	D	1929	230A2.000, 230A3.000 230A4.000	M	+/-		02/94 ▸ 12/01	46477022	**700021**	12X1.5	19
1.9 D,1.9 TD	*230/AAMA/AAMB/AAMD/AAMF AAMQ/AAMR/ABMA/ABMB/ABMD ABMF/ABMP/ABMQ/ABMR/ACMA ACMD/ACMF/BBMA/BBMD/BBMF BBMN/BBMP/BBMQ/BBMR/BCMA BCMD/BCMF/BCMQ/EAMF/EBMF*	D	1929	230A4.000, 230A3.000 230A2.000	M	+/-		02/94 ▸	7663320	**700027**	12X1.5	19
2.5 D,2.5 TD	*230/AEMP/AEMT/AEMU/AFMP BEMA/BEMB/BEMD/BEMF/BEMG BEMH/BEMN/BEMQ/BEMR/BEMT BFMA/BFMB/BFMD/BFMF/BFMG BFMH/BFMN/BFMQ/BFMR/BFMS BLWF/CDMA/CDMF/CEMA/CEMB CEMD/CEME/CEMF/CEMG/CEMH CEML/CEMM/CEMN/CFMA/CFMB CFMD/CFMF/CFMG/CFMH/CFMN*	D	2499	8140-47, 8140-47R	M	+/-		02/94 ▸ 12/01	4850371	**700021**	12X1.5	19
2.8 D,2.8 TDi	*233CIMN, 230/AIMF/AIMT AIMU/ALMP/ALMT/ALWP/ALWT BIMA/BIMC/BIMD/BIMF/BIMH BIMM/BIMN/BIMP/BIMQ/BIMS BIMT/BLMA/BLMF/BLMH/BLMM BLMN/BLMP/BLMQ/BLMS/BLMT BLMU/BLWA/BLWF/BLWN/BLWQ BLWS/BLWT/CEMN/CIMA/CIME CIMF/CIMH/CIML/CIMM/CIMN CIWA/CIWF/CIWH/CIWN/CLMA CLMB/CL*	D	2798	8140-63, 8140-43	M	+/-		01/98 ▸ 12/01	4850371	**700021**	12X1.5	19
Ducato (2002>2006)											
2.0 i GPL	*244/AAMA/BTMF*	G	1998	RFL	M	+/-		01/02 ▸ 06/06	9631000880	●**700054**	12X1.5	21
2.0,2.0 i	*244/AAMA/APMF/APMP/APMR ATMF/ATMN/ATMP/ATMR/BPMA BPMF/BTMA/BTMF/BTMN/BTMP BTMR/BTMS/BTWF/BTWS/BTWT CTMF/CTMN/CTWN*	E	1998	RFL	M	+/-		01/02 ▸ 06/06	9631000880	●**700054**	12X1.5	21
2.8 TD	*244/APMF/APMP/APMR/BPMA BPMF/BPMP/BPWN/BPWR*	D	2798	8140-43	M	+/-		01/02 ▸ 06/06	4850371	**700021**	12X1.5	19
Fiorino (146) (93>2000)											
-	*146RH53*	D	1698	146D7.000	M	+/-		06/96 ▸ 09/00	7735919	**700010**	16X1.5	19
Scudo (95>2003)											
1.6 i	*220/WG5/XG5/XG59/YG5/YH5/ZG5*	E	1581	220A2.000	M	+/-		07/95 ▸ 12/03	5972332	**700019**	12X1.5	19
1.9 D,1.9 TD	*220/WH5C/XE5/XE59/XF5 XF59/XH5/XH51/XH5A/XH5B XH50/YE5/YF5/YH5/YH5C/ZE5 ZE5A/ZF5/ZH5/ZH5A/ZH5B*	D	1905	XUD9TEF/L3, XUD9TEF/K, XUD9A/K, XUD9TEF/W3	M	+		07/95 ▸ 12/03	9601842680	**700000**	14X1.25	19
1.9 D,1.9 TD ▸ 0007847	*220/WH5C/XF5/XF59/XH5 XH5A/XH5B/YF5/ZF5/ZH5*	D	1905	XUD9TEF/L3, XUD9A/K, XUD9TEF/W3	M	+/-		07/95 ▸	9618572580	**700017**	14X1.25	19
1.9 D,1.9 TD	*220/WH5C/XE5/XE59/XF5 XF59/XH5/XH51/XH5A/XH5B XH50/YE5/YF5/YH5/YH5C/ZE5 ZE5A/ZF5/ZH5/ZH5A/ZH5B*	D	1905	XUD9A,XUD9TEF/K,XUD9TEF/L3, XUD9TEF/W3	M	+		07/95 ▸ 12/03	9621000680	●**700056**	14X1.25	19

• **New** Nouveau **Nuevo** Novo **Nuovo** Nieuw **Neu** **Yeni** Новый Nou

Valeo

Water temperature sensor
Sonde à thermistance
Sensor de temperatura de água
Sensor de temperatura de água
Sensore temperatura acqua
Watertemperatuursensor
Wassertemperaturfühler

Czujnik temperatury wody
Snímač teploty vody
Comutator de temperatură
Su sicklik sensörü
датчик температуры воды

			cc			AC			OE	Valeo	COD.	mm
FIAT (.../...)												
Scudo (95>2003) (.../...)												
2.0 JTD,2.0 JTD 16V ▸ 0009303	*220/XN5O/XP5O/XR5A/XR5B YP5A/ZP5/ZP5A*	D	1997	DW10ATED4,DW10BTED DW10BTED+L4	M	+/-		02/00 ▸ 12/03	9636777280	●700054	12X1.5	21
Scudo (2004>2006)												
2.0 JTD	*220/KP5A/YP5R/ZP5R, 222 0ZP5/0ZPS*	D	1997	DW10BTED	M	+/-		01/04 ▸ 12/06	9636777280	●700054	12X1.5	21
Strada Pick Up												
-	*178EX*	D	1697	176A3.000	M	+/-		03/99 ▸ 03/03	7735919	700010	16X1.5	19
-	*178EX*	D	1697	176A3.000	M	+/-		03/99 ▸ 03/03	46477022	700021	12X1.5	19
FORD												
Cougar												
2.0 i	*FT60T*	E	1998	EDB	M			09/98 ▸ 02/01	4537712	700026	12X1.5	19
Escort (80>86)												
1.1	*AVA//DF*	E	1117	GLA	M	+/-		08/80 ▸ 02/86	6058836	700003	1/8X27 NPTF	13
1.1	*AVA//DF*	E	1117	GLA	M	+		08/80 ▸ 02/86	1657685	●700046	1/8X27 NPT	13
1.3	*AVA//GH*	E	1296	JPA	M	+/-		08/80 ▸ 02/86	6058836	700003	1/8X27 NPTF	13
1.3	*AVA//GH*	E	1296	JPA	M	+		08/80 ▸ 02/86	1657685	●700046	1/8X27 NPT	13
Escort (86>90)												
1.1		E	1117	GSG	M	+/-		01/86 ▸ 09/90	6058836	700003	1/8X27 NPTF	13
1.1		E	1117	GSG	M	-		01/86 ▸ 09/90	1657685	●700046	1/8X27 NPT	13
1.3		E	1297	JLA	M	+/-		01/86 ▸ 09/90	6058836	700003	1/8X27 NPTF	13
1.3		E	1297	JLA	M	-		01/86 ▸ 09/90	1657685	●700046	1/8X27 NPT	13
1.4,1.4 i	*GAF*	E	1392	FU, FUA	M	+/-		01/86 ▸ 09/90	6146864	700004	1/8X27 NPTF	13
1.6,1.6 i		E	1597	LUC, LRB	M	+/-		01/86 ▸ 09/90	6146864	700004	1/8X27 NPTF	13
1.6		E	1597	LUC	A	+/-		01/86 ▸ 09/90	6146864	700004	1/8X27 NPTF	13
1.6 Turbo,1.6 i		E	1597	R7, LRB, LNB	M	+/-		01/86 ▸ 09/90	6146864	700004	1/8X27 NPTF	13
Escort (90>94)												
1.1	*ABL*	E	1118	GUF	M	+/-		09/90 ▸ 03/91	6058836	700003	1/8X27 NPTF	13
1.1	*ABL*	E	1118	GUF	M	-		09/90 ▸ 03/91	1657685	●700046	1/8X27 NPT	13
1.3,1.3 i	*AAL//AA/XF, ABL//AA/XE AVL, ANL//XE*	E	1299	JBE, JBD, J6A	M	+/-		09/90 ▸ 12/94	6058836	700003	1/8X27 NPTF	13
1.3,1.3 i	*AAL//AA/XF, ABL//AA/XE AVL, ANL//XE*	E	1299	J6A,JBD,JBE	M	-		09/90 ▸ 12/94	1657685	●700046	1/8X27 NPT	13
1.4,1.4 i	*AAL/BC/CC/CH, ALLCG, ABL BC/CC/CH, ANL/3L/BE/CC AVL//CC*	E	1392	F6F, FUH, F6G	M	+/-		09/90 ▸ 12/94	6146864	700004	1/8X27 NPTF	13
1.4	*GAL*	E	1392	F4B	M	+/-		08/93 ▸ 12/94	1657685	●700046	1/8X27 NPT	13
1.4 i	*AAL/CC/CH, ALLCG, ABL/CC/CH, AVLCC GAL, ANL/3L/CC*	E	1392	F6F,F6G	M			02/91 ▸ 12/94	1657685	●700046	1/8X27 NPT	13
1.6,1.6 i	*AAL/DC/FC/GC, ABL/DC/FC GC, ALL//GG, ANL/DF/FF/GC*	E	1597	LUJ, LJF, LUK, LJE	M	+/-		09/90 ▸ 12/94	6146864	700004	1/8X27 NPTF	13
1.6	*AALEE*	E	1597	LUK	A	+/-		09/90 ▸ 12/94	6146864	700004	1/8X27 NPTF	13
1.6 i	*ABLGC, AAL/GC, ANLGC, ALL//GG*	E	1597	LJE,LJF	M	+/-		02/91 ▸ 12/92	1657685	●700046	1/8X27 NPT	13
2.0 i	*ABL/C4/C4V*	E	1993	N5F	M			03/92 ▸ 06/94	1639283	700021	12X1.5	19
2.0 i	*ABL/C4/C4V*	E	1993	N5F	M			03/92 ▸ 12/94	6145143	700034	1/8X27 NPTF	
Escort (95>2001)												
1.3 i	*AAL/6F/XE, AFLXE, ABL/6E/XE, AVL ANL//6H*	E	1299	J4,J6A	M	-		01/95 ▸ 09/01	1657685	●700046	1/8X27 NPT	13
1.6 i	*AAL/WL, AFLWL, ALLWM, ABL//WK, ANL WM*	E	1597	L1E,L1H,L1K	M	+/-		09/95 ▸ 05/98	7158126	●700061	3/8X18 NPTF	19
1.6 i	*ABLAM, AFLAM, ALLAN, ANLAN, AAL/AM*	E	1597	L1K	A	+/-		09/95 ▸ 05/98	7158126	●700061	3/8X18 NPTF	19
1.6 i	*ABLWK, AFLWL, AAL/WL, ANL//WM*	E	1597	L1H, L1K	M	+/-		05/98 ▸ 09/01	4537712	700026	12X1.5	19
1.6 i	*ABLAM, AFLAM, AAL/AM*	E	1597	L1K	A	+/-		05/98 ▸ 09/01	4537712	700026	12X1.5	19
1.8 i	*AAL/9M/RK, ABL/9M/RK, ANL9M, AFL/9M RK*	E	1796	RKC, RDA	M	+/-		05/98 ▸ 09/01	4537712	700026	12X1.5	19

• **New** Nouveau **Nuevo** Novo **Nuovo** Nieuw **Neu** **Yeni** Новый Nou

			CC		AC			OE	Valeo	COD.	mm	
FORD (.../...)												
Escort (95>2001) (.../...)												
1.8 i	*AAL/9M/RK, ABL/9M/RK, AFL/9M/RK ANL9M, ALL//90*	E	1796	RDA,RKC,RQB	M	+/-		09/95 ▸ 05/98	7158126	●**700061**	3/8X18 NPTF	19
1.8 D,1.8 TD	*AAL/1M/7L/97/BN, ABL/1L 7K/7KC/97/BN/BNC, ALL AFL/1L/7K/97/BN, ANL//1N 7N/97/BN, AVL//18*	D	1753	RFS, RV, RTH, RFD	M			01/95 ▸ 09/01	6145143	**700034**	1/8X27 NPTF	
1.8 TD	*AAL/1M/97, ABL/1L/97, ALL AFL/1L/97, AVL18, ANL 1N/97*	D	1753	RFD,RFS	M	+/-		01/95 ▸ 09/01	7158126	●**700061**	3/8X18 NPTF	19
Fiesta (76>83)												
0.9		E	957	TLA, TKA	M	+/-		06/76 ▸ 08/83	6058836	**700003**	1/8X27 NPTF	13
0.9		E	957	TKA	A	+/-		06/76 ▸ 08/83	6058836	**700003**	1/8X27 NPTF	13
0.9		E	957	TKA,TLA	M	-		06/76 ▸ 08/83	1657685	●**700046**	1/8X27 NPT	13
1.3		E	1296	J3E	M	+/-		03/77 ▸ 08/83	6058836	**700003**	1/8X27 NPTF	13
Fiesta (83>89)												
0.9		E	957	TLA, TKB	M	+/-		08/83 ▸ 1989	6058836	**700003**	1/8X27 NPTF	13
0.9		E	957	TKB,TLA	M	-		08/83 ▸ 1989	1657685	●**700046**	1/8X27 NPT	13
Fiesta (89>95)												
1.0	*FBJKZ, FAJ/KA/KZ*	E	999	TLB	M	+/-		04/89 ▸ 01/94	6058836	**700003**	1/8X27 NPTF	13
1.0	*FBJKZ, FAJ/KA/KZ*	E	999	TLB	M	-		04/89 ▸ 01/94	1657685	●**700046**	1/8X27 NPT	13
1.1,1.1 i	*FAJ/1B/2C/2D/2F/AB/BB/KC KD/KF, FBJ/1A/1B/2B/2C/2E AA/BA/BB/KB/KC/KE*	E	1118	GUE, G6A	M	+/-		02/89 ▸ 07/95	6146864	**700004**	1/8X27 NPTF	13
1.1,1.1 i	*FAJ/1B/2C/2D/2F/AB/BB/KC KD/KF, FBJ/1A/1B/2B/2C/2E AA/BA/BB/KB/KC/KE*	E	1118	GUE, G6A	M	+/-		02/89 ▸ 07/95	6058836	**700003**	1/8X27 NPTF	13
1.1	*FAJCB, FBJCA*	E	1118	GUE	A	+/-		02/89 ▸ 12/92	6146864	**700004**	1/8X27 NPTF	13
1.1	*FAJCB, FBJCA*	E	1118	GUE	A	+/-		02/89 ▸ 12/92	6058836	**700003**	1/8X27 NPTF	13
1.3,1.3 i	*FAJ/WD/WF/XD, FBJ/WC/WE XC*	E	1299	JBC, J6B	M	+/-		02/89 ▸ 07/95	6146864	**700004**	1/8X27 NPTF	13
1.3,1.3 i	*FAJ/WD/WF/XD, FBJ/WC/WE XC*	E	1299	J6B, JBC	M	+/-		02/89 ▸ 07/95	6058836	**700003**	1/8X27 NPTF	13
1.3 i	*FBJZC, FAJ/ZC/ZD/ZF*	E	1299	J6B	A	+/-		04/91 ▸ 07/95	6146864	**700004**	1/8X27 NPTF	13
1.3 i	*FBJZC, FAJ/ZC/ZD/ZF*	E	1299	J6B	A	+/-		04/91 ▸ 07/95	6058836	**700003**	1/8X27 NPTF	13
1.4,1.4 i	*FAJ/5H/DC/LC/MC/MD/ME FBJ/5G/DB/LB/MB/MC/MD*	E	1392	FUF, F6E, F4A	M	+/-		02/89 ▸ 07/95	6146864	**700004**	1/8X27 NPTF	13
1.4	*FAJEC, FBJEB*	E	1392	FUF	A	+/-		02/89 ▸ 05/91	6146864	**700004**	1/8X27 NPTF	13
1.6,1.6 i,1.6 i Turbo	*FAJ/FC, FBJ//FB/GE/TTF*	E	1597	LJD, LUH, LNA, LJC	M	+/-		02/89 ▸ 01/94	6146864	**700004**	1/8X27 NPTF	13
1.8 D,1.8 TD	*FAJ/JF/NF/NG/NI/TF/VG FBJ/JE/NE/NH/TE/VE, FVJ 8/9/9D*	D	1753	RFE, RTD, RTC	M	-		02/89 ▸ 07/95	6145143	**700034**	1/8X27 NPTF	
Fiesta (95>99)												
1.0 i	*JBSC4*	E	999	C4	M	+/-		05/96 ▸ 04/99	6058836	**700003**	1/8X27 NPTF	13
1.1 i	*FAJ2F, FBJ2E*	E	1118	G6A	M	+/-		08/95 ▸ 09/96	6058836	**700003**	1/8X27 NPTF	13
1.3 i	*JAS/J4C/JJA, JBS/J4C/JJA, JVS/J4C JJA*	E	1299	JJA, J4C	M	+/-		08/95 ▸ 08/99	6058836	**700003**	1/8X27 NPTF	13
Fiesta (99>2002)												
1.3 i	*JAS, JBS*	E	1299	J4L, JJC, J4J, JJE	M	+/-		08/99 ▸ 03/02	6058836	**700003**	1/8X27 NPTF	13
Fiesta (2002>)												
2.0 i 16V	*NH*	E	1999	NAJB	M	+/-		01/05 ▸	4537712	**700026**	12X1.5	19
Focus (2004>)												
1.8 i CNG 16V,1.8 i Flexifuel 16V		F	1798	DURA18CNG, Q7DA	M	+/-		11/04 ▸	4537712	**700026**	12X1.5	19
2.0 i 16V		E	1999	2.0 DURATEC HE	M	+/-		11/04 ▸	4537712	**700026**	12X1.5	19
2.0 i 16V		E	1999	2.0 DURATEC HE	A	+/-		11/04 ▸	4537712	**700026**	12X1.5	19
Focus C-Max (03>07)												
1.8 i CNG 16V,1.8 i Flexifuel 16V		F	1798	Q7DA, DURA18CNG	M			06/06 ▸	4537712	**700026**	12X1.5	19

• **New** Nouveau **Nuevo** Novo **Nuovo** Nieuw **Neu** **Yeni** Новый Nou

Valeo

Water temperature sensor
Sonde à thermistance
Sensor de temperatura de água
Sensor de temperatura de água
Sensore temperatura acqua
Watertemperatuursensor
Wassertemperaturfühler

Czujnik temperatury wody
Snímač teploty vody
Comutator de temperatură
Su sicklik sensörü
датчик температуры воды

Type Ctr.		cc		AC			OE	Valeo	COD.	mm
FORD (.../...)										
Focus C-Max (03>07) (.../...)										
1.6 i 16V *DM*	E	1596	HWDA/B	M	+/-		06/03 ▸	4537712	**700026**	12X1.5 19
1.8 i 16V *DMIC, DMJC*	E	1798	DURA18, CSDA	M	+/-		06/03 ▸	4537712	**700026**	12X1.5 19
2.0 i 16V *DM*	E	1999	2.0 DURATEC HE	M	+/-		06/03 ▸	4537712	**700026**	12X1.5 19
2.0 i 16V	E	1999	2.0 DURATEC HE	A			11/05 ▸	4537712	**700026**	12X1.5 19
Focus C-Max (2007>)										
1.8 i 16V	F	1798	1.8 DURATEC	M			03/07 ▸	4537712	**700026**	12X1.5 19
1.8 i 16V	E	1798	1.8 DURATEC	M			03/07 ▸	4537712	**700026**	12X1.5 19
2.0 i 16V	E	1999	2.0 DURATEC HE	M			03/07 ▸	4537712	**700026**	12X1.5 19
2.0 i 16V	E	1999	2.0 DURATEC HE	A			03/07 ▸	4537712	**700026**	12X1.5 19
Galaxy (95>2000)										
2.3 i 16V *WGRY5*	E	2295	Y5	A	+/-		01/97 ▸	7158126	●**700061**	3/8X18 NPTF 19
2.3 i 16V *WGRY5*	E	2295	Y5	A	+/-		01/97 ▸ 03/00	6193368	●**700059**	1/8X27NPT 22
2.8 i VR6 *WGRAAA*	E	2792	PW	M	+/-		05/95 ▸ 03/00	1669949	●**700036**	20
2.8 i VR6 *WGRAAA*	E	2792	PW	A	+/-		05/95 ▸ 03/00	1669949	●**700036**	20
Galaxy (2000>)										
2.3 i 16V	E	2295	Y5	M	+/-		04/00 ▸ 08/01	6193368	●**700059**	1/8X27NPT 22
2.3 i 16V	E	2295	Y5	M	+/-		04/00 ▸	7158126	●**700061**	3/8X18 NPTF 19
2.3 i 16V	E	2295	Y5	A	+/-		04/00 ▸ 08/01	6193368	●**700059**	1/8X27NPT 22
2.3 i 16V	E	2295	Y5	A	+/-		04/00 ▸	7158126	●**700061**	3/8X18 NPTF 19
Galaxy CA1 (2006>)										
2.0 i 16V	E	1999	2.0 DURATEC HE	M	+		04/06 ▸	4537712	**700026**	12X1.5 19
2.3 i 16V	E	2261	2.3 DURATEC HE	A			03/07 ▸	4537712	**700026**	12X1.5 19
Granada (85>91)										
1.8 *GAE*	E	1796	REC	M	-		05/85 ▸ 08/88	1657685	●**700046**	1/8X27 NPT 13
2.0,2.0 i *GAE*	E	1993	NEL,NRA	M	-		05/85 ▸ 01/89	1657685	●**700046**	1/8X27 NPT 13
2.0,2.0 i *GAE*	E	1993	NEL,NRA	A	-		05/85 ▸ 01/89	1657685	●**700046**	1/8X27 NPT 13
Granada (92>95)										
2.0 i	E	1998	N9B	M	+/-		01/92 ▸ 01/95	1657685	●**700046**	1/8X27 NPT 13
2.0 i	E	1998	N9B	A	+/-		01/92 ▸ 01/95	1657685	●**700046**	1/8X27 NPT 13
Ka (96>2008)										
1.3 i *RBT*	E	1299	J4D,J4K,J4M,JJB,JJD,JJF	M	+/-		09/96 ▸ 10/02	1657685	●**700046**	1/8X27 NPT 13
Mondeo (93>2000)										
1.6 i *BFP, BNP, BAP*	E	1597	L1, L1J-90	M	+/-		08/96 ▸ 08/00	4537712	**700026**	12X1.5 19
1.8 i *BFP, BNP, BAP*	E	1796	RKJ	M	+/-		08/96 ▸ 08/00	4537712	**700026**	12X1.5 19
1.8 i *BFP, BNP, BAP*	E	1796	RKJ	A	+/-		08/96 ▸ 08/00	4537712	**700026**	12X1.5 19
2.0 i *BFP, BNP, BAP*	E	1988	NGA	M	+/-		08/96 ▸ 08/00	4537712	**700026**	12X1.5 19
2.0 i *BFP, BNP, BAP*	E	1988	NGA	A	+/-		08/96 ▸ 08/00	4537712	**700026**	12X1.5 19
2.5 i V6 24V *BAP, BFP*	E	2544	SEA	M	+/-		08/96 ▸ 08/00	4537712	**700026**	12X1.5 19
1.8 TD *BFP, BNP, BAP*	D	1753	RFN	M	+/-		08/96 ▸ 12/97	6145143	**700034**	1/8X27 NPTF
Mondeo (2000>)										
1.8 i 16V *WFO/AXX/FXX/NXX*	E	1798	CGBB, CHBA, CGBA, CHBB	M			10/00 ▸	4537712	**700026**	12X1.5 19
2.0 i 16V *WFO/AXX/FXX/NXX*	E	1999	CJBB, CJBA	M			10/00 ▸	4537712	**700026**	12X1.5 19
2.0 i 16V *WFO/AXX/FXX/NXX*	E	1999	CJBA, CJBB	A			10/00 ▸	4537712	**700026**	12X1.5 19
Mondeo (2003>)										
1.8 SCi 16V	E	1798	ZH18	M			06/03 ▸	4537712	**700026**	12X1.5 19
Mondeo (2005>)										
1.8 i 16V	E	1798	DURA18	M	+/-		05/05 ▸	4537712	**700026**	12X1.5 19
2.0 i 16V	E	1999	2.0 DURATEC HE	M	+/-		05/05 ▸	4537712	**700026**	12X1.5 19
2.0 i 16V	E	1999	2.0 DURATEC HE	A	+/-		05/05 ▸	4537712	**700026**	12X1.5 19
Mondeo III (2007>)										
2.0 16V	E	1999	2.0 DURATEC HE	M	+		10/07 ▸	4537712	**700026**	12X1.5 19

• **New** Nouveau **Nuevo** Novo **Nuovo** Nieuw **Neu** **Yeni** Новый Nou

		CC			AC			OE	Valeo	COD.	mm
FORD (.../...)											
Mondeo III (2007>) (.../...)											
2.3 16V	E	2261	2.3 DURATEC HE	A	+		09/07 ▸	4537712	**700026**	12X1.5	19
Orion (83>90)											
1300	E	1296	JP, JPA	M	+/-		09/83 ▸ 08/90	6146864	**700004**	1/8X27 NPTF	13
1400,1400 i	E	1392	FUA, F6B	M	+/-		02/86 ▸ 08/90	6146864	**700004**	1/8X27 NPTF	13
1600,1600 i	E	1597	LR, LUA, LRA	M	+/-		09/83 ▸ 08/90	6146864	**700004**	1/8X27 NPTF	13
1600	E	1597	LUA	A	+/-		02/86 ▸ 08/90	6146864	**700004**	1/8X27 NPTF	13
1600	E	1598	LPA	M	+/-		09/83 ▸ 02/86	6146864	**700004**	1/8X27 NPTF	13
1600	E	1598	LPA	A	+/-		09/83 ▸ 02/86	6146864	**700004**	1/8X27 NPTF	13
Orion (90>93)											
1.3 *AFL*	E	1297	JB	M	+/-		09/90 ▸ 09/93	6058836	**700003**	1/8X27 NPTF	13
1.3 i *AFL*	E	1299	J6A	M	+/-		09/90 ▸ 09/93	6058836	**700003**	1/8X27 NPTF	13
1.4,1.4 i *AFL*	E	1392	FUH, F6F, F6G	M	+/-		09/90 ▸ 09/93	6146864	**700004**	1/8X27 NPTF	13
1.6 *AFL*	E	1597	LUJ, LUK	M	+/-		09/90 ▸ 09/93	6146864	**700004**	1/8X27 NPTF	13
Puma											
1.7 i 16V *ECV*	E	1679	MHA,MHA-160	M	+/-		05/97 ▸ 12/01	1657685	•**700046**	1/8X27 NPT	13
Scorpio (92>94)											
2.0,2.0 i *GFK, GNM, GAE*	E	1998	N8B,N9B,N9D,N9F	M	+/-		02/92 ▸ 10/94	1657685	•**700046**	1/8X27 NPT	13
2.0,2.0 i *GAE, GFK*	E	1998	N8B,N9B,N9D,N9F	A	+/-		02/92 ▸ 10/94	1657685	•**700046**	1/8X27 NPT	13
Scorpio (94>98)											
2.0 i *GFR, GNR*	E	1998	NSD,NSE	M	+/-		10/94 ▸ 07/98	1657685	•**700046**	1/8X27 NPT	13
Sierra (82>86)											
1.3	E	1294	JCT	M	+/-		05/83 ▸ 10/84	6146864	**700004**	1/8X27 NPTF	13
1.6,1600	E	1593	LCT, LCS	M	+/-		05/83 ▸ 10/84	6146864	**700004**	1/8X27 NPTF	13
1.6	E	1593	LCT	A	+/-		05/83 ▸ 10/84	6146864	**700004**	1/8X27 NPTF	13
1600	E	1597	LSD	M	+/-		10/84 ▸ 10/84	6146864	**700004**	1/8X27 NPTF	13
1.6	E	1597	LSE	A	+/-		10/84 ▸ 10/84	6146864	**700004**	1/8X27 NPTF	13
1.8,1800	E	1796	REB, RED	M	+/-		10/84 ▸ 10/84	6146864	**700004**	1/8X27 NPTF	13
1800	E	1796	REB	A	+/-		10/84 ▸ 10/84	6146864	**700004**	1/8X27 NPTF	13
2.0,2000	E	1993	NET	M	+/-		05/83 ▸ 10/84	6146864	**700004**	1/8X27 NPTF	13
2.0	E	1993	NET	A	+/-		05/83 ▸ 10/84	6146864	**700004**	1/8X27 NPTF	13
2.0	E	1998	NYT	M	+/-		05/83 ▸ 10/84	6146864	**700004**	1/8X27 NPTF	13
2.3,2300	E	2294	YY	A	+/-		05/83 ▸ 10/84	6146864	**700004**	1/8X27 NPTF	13
S-Max											
2.0 i 16V	E	1999	2.0 DURATEC HE	M	+/-		04/06 ▸	4537712	**700026**	12X1.5	19
2.3 i Turbo 16V	E	2261	2.3 DURATEC HE	A			03/07 ▸	4537712	**700026**	12X1.5	19
FORD											
Courrier (91>96)											
1.8 D	D	1753	RTD	M			11/95 ▸ 09/96	7158126	•**700061**	3/8X18 NPTF	19
Courrier (96>)											
1.6 i *J3S*	E	1596	ZL16	M			07/99 ▸	7158126	•**700061**	3/8X18 NPTF	19
1.8 D *J3SC, J5SRTJ*	D	1753	RTJ	M			10/96 ▸	7158126	•**700061**	3/8X18 NPTF	19
Tourneo Connect											
1.8 i 16V	E	1796	EYPA	M	+/-		05/02 ▸ 06/06	6193368	•**700059**	1/8X27NPT	22
Transit (86>91)											
2.9 i V6	E	2933	BRT	M			04/89 ▸ 12/91	1657685	•**700046**	1/8X27 NPT	13
Transit (92>95)											
2.9 i V6 *EJBVDS*	E	2933	BRT	M			08/91 ▸ 08/94	1657685	•**700046**	1/8X27 NPT	13
Transit (95>99)											
2.0 i GPL	G	1998	NSH	M	-		09/94 ▸ 12/99	1657685	•**700046**	1/8X27 NPT	13

• **New** Nouveau **Nuevo** Novo **Nuovo** Nieuw **Neu** **Yeni** Новый Nou

		cc			AC			OE	Valeo	COD.	mm
FORD (.../...)											
Transit (95>99) (.../...)											
2.0 i		E	1998	NSF,NSG	M	-		09/94 ▸ 12/99	1657685	●700046	1/8X27 NPT	13
Transit (2006>)											
2.3 i 16V		E	2261	2.3 DURATEC HE	M			04/06 ▸	4537712	700026	12X1.5	19
Transit Connect (2002>2006)											
1.8 i 16V	*PT2EYP, PU2EYP*	E	1796	EYPA	M	+/-		05/02 ▸ 06/06	6193368	●700059	1/8X27NPT	22
IVECO											
Daily (78>89)											
2.4 D,2.4 TD	*1003, 1001, 1031, 1005 1035, 9005*	D	2445	8140.61, 8140.21	M	-		01/78 ▸ 12/89	4448131	700002	16.5X1	19
2.5 TD	*1261*	D	2499	8140.27	M	-		01/85 ▸ 12/89	4448131	700002	16.5X1	19
Daily (89>96)											
2.5 TD	*1313, 1311*	D	2499	8140.47	M	-		03/89 ▸ 03/96	4448131	700002	16.5X1	19
LANCIA											
Dedra											
1.6 ie,1.6 ie 16V	*835/EB54A/EB55B/EI54A EI55B*	E	1581	159B9.000, 182A4.000	M	+/-		10/95 ▸ 09/99	7735919	700010	16X1.5	19
1.8 ie 16V	*835/EH54A/EH55B/FG54A FG55B*	E	1747	183A1.000, 182A2.000	M	+/-		03/96 ▸ 09/99	7735919	700010	16X1.5	19
1.8 ie	*835/FA54A/FA55B*	E	1756	836A5.000	M	+/-		10/95 ▸ 09/99	7735919	700010	16X1.5	19
2.0 ie 16V	*835/ED54A/ED55B/ED55W*	E	1995	836A3.000	M	+/-		10/95 ▸ 09/99	7735919	700010	16X1.5	19
2.0 ie	*835EC44A*	E	1995	835A5.046	A	+/-		10/95 ▸ 09/99	7735919	700010	16X1.5	19
1.9 TDs	*835/AS54A/EE54A/EE55B EF54A/EF55B*	D	1929	835A4.000, 160D1.000	M	+/-		03/89 ▸ 09/99	7735919	700010	16X1.5	19
1.9 Tds	*835/EF54A/EF55B*	D	1929	160D1.000	M	+/-		07/94 ▸ 09/99	46477022	700021	12X1.5	19
Delta (93>99)											
1.4 ie	*836/AF55A/AH55A*	E	1372	836A4.000, 160A1.046	M	+/-		10/95 ▸ 08/99	7735919	700010	16X1.5	19
1.6 ie,1.6 ie 16V	*836/AD55A/AO53A/AO55A AP53A/AP55A/BD55A*	E	1581	182A6.000, 835C1.000 182A4.000	M	+/-		10/95 ▸ 08/99	7735919	700010	16X1.5	19
1.6 ie,1.6 ie 16V ▸3297145	*836/AO53A/AO55A/AP53A AP55A*	E	1581	182A4.000, 182A6.000	M			07/95 ▸	46414596	700024	12X1.5	19
1.8 ie 16V	*836/AO55A/AR53A/AR55A*	E	1747	182A2.000, 183A1.000	M	+/-		10/95 ▸ 08/99	7735919	700010	16X1.5	19
1.8 ie	*836/AG55A/AI55A/AL55A BI55A*	E	1756	836A5.000, 835C4.000 836A6.000	M	+/-		10/95 ▸ 08/99	7735919	700010	16X1.5	19
2.0 i 16V,2.0 i Turbo 16V	*836/AA55A/AB53A/AB55A AS53A/CA53A/CA55A*	E	1995	836A2.000, 836A3.000 175A4.000	M	+/-		10/95 ▸ 08/99	7735919	700010	16X1.5	19
1.9 TD	*836/AN53A/AN55A*	D	1929	160D1.000	M	+/-		06/94 ▸ 08/99	46477022	700021	12X1.5	19
1.9 TD	*836/AM53A/AM55A/AN53A AN55A*	D	1929	160D1.000, 835A4.000	M	+/-		10/95 ▸ 08/99	7735919	700010	16X1.5	19
Kappa											
2.0 ie 20V ▸2092439	*838/AA1AA/AG1AA/BG1AA*	E	1995	838A1.000, 838A6.000	M	+/-		10/94 ▸	5972332	700019	12X1.5	19
2.0 ie 20V ▸2092439	*838/AA1AA/AG1AAA*	E	1995	838A6.000, 838A1.000	A	+/-		10/94 ▸	5972332	700019	12X1.5	19
2.0 ie Turbo 20V ▸2102852	*838/AM1AA/BM1AA/CM1AA*	E	1998	175A3.000	M	+/-		05/98 ▸	7738223	700022	12X1.5	19
2.4 ie 20V	*838/AC1AA/BC1AA/CC1AA*	E	2446	838A2.000	M	+/-		10/94 ▸ 10/01	5972332	700019	12X1.5	19
2.4 ie 20V	*838BC11A*	E	2446	838A2.000	A	+/-		05/96 ▸ 10/01	5972332	700019	12X1.5	19
2.4 JTD,2.4 TDs ▸2102330	*838/AH1AA/AL1AA/BH1AA BL1AA*	D	2387	838A8.000, 838A7.000	M	+/-		05/96 ▸ 04/99	60814715	700028	12X1.5	19
Lybra											
1.9 JTD	*839/AXD1A0/BXD1A0*	D	1910	AR32302	M	+/-		09/99 ▸	46472179	700028	12X1.5	19

• **New** Nouveau **Nuevo** Novo **Nuovo** Nieuw **Neu** **Yeni** Новый Nou

			CC		AC			OE	Valeo	COD.	mm	
LANCIA (.../...)												
Lybra (.../...)												
2.4 JTD	*839/AXE1A/AXE1A0/BXE1A BXE1A0*	D	2387	839A5.000, AR32501	M	+/-		09/99 ▸	46472179	**700028**	12X1.5	19
Phedra												
2.0 JTD 16V	*179AXE1A*	D	1997	DW10ATED4	A	+/-		03/03 ▸	9632562080	**●700055**	20	
2.2 JTD 16V	*179AXC1A*	D	2179	DW12ATED4/L4	M	+/-		09/02 ▸ 02/04	9632562080	**●700055**	20	
Thema												
2500 TD	*834/AE54A/AE55C/AM54A AM55C*	D	2500	8144-97S, 8144-97	M	+/-		10/88 ▸ 08/92	7588856	**700007**	14X1.5	19
2.5 TDs	*834/FE54A/FE55C/LE54A LE55C*	D	2500	8144-97YC, 8144-97Y	M	+/-		09/92 ▸ 11/94	4850371	**700021**	12X1.5	19
2500 TD	*834/AE44A/AE85C/AM44A AM85C*	D	2500	8144-97, 8144-97S	A	+/-		10/88 ▸ 08/92	7588856	**700007**	14X1.5	19
Y Ipsilon (95>2000)												
1.1 i	*840AE1A*	E	1108	176B2.000	M	-		04/97 ▸ 08/00	46477022	**700021**	12X1.5	19
1.2 i	*840/AA/AA1A*	E	1242	840A3.000	M	+/-		11/95 ▸ 08/00	46477022	**700021**	12X1.5	19
1.2 i	*840AA1AA*	E	1242	840A3.000	A	+/-		11/95 ▸ 08/00	46477022	**700021**	12X1.5	19
1.4 i	*840/AB1A/AC1A*	E	1370	840A4.000, 840A2.000	M	+/-		11/95 ▸ 08/00	5972332	**700019**	12X1.5	19
Zeta												
2.0 ie 16V	*220AL5*	E	1998	RFV	M	+/-		07/98 ▸ 12/00	9613147080	**700015**	12X1.5	19
2.1 TD	*220AJ5*	D	2088	P8C	M	+/-		03/96 ▸ 05/98	9601842680	**700000**	14X1.25	19
2.1 TD	*220AJ5*	D	2088	P8C	M	+/-		03/96 ▸ 05/98	9621000680	**●700056**	14X1.25	19
MERCEDES												
E Class (124)												
E250D D,E250DL D,E250TD D E250TD TD	*124/.126/.128/.129/.186 .188*	D	2497	602.962, 605.911	M			07/93 ▸ 02/96	0085425617	**700050**	14X1.5	19
E250D D,E250DL D,E250TD D E250TD TD	*124/.126/.128/.129/.186 .188*	D	2497	605.911, 602.962	A			07/93 ▸ 02/96	0085425617	**700050**	14X1.5	19
V Class (638/2)												
V230TD TD	*638.274*	D	2299	601.970	M	+/-		10/96 ▸ 12/02	0085425617	**700050**	14X1.5	19
V230TD TD	*638.274*	D	2299	601.970	A	+/-		10/96 ▸ 12/02	0085425617	**700050**	14X1.5	19
MERCEDES												
Vito (96>2003)												
2.3 D,2.3 TD	*638/.064/.068/.074/.078 .164/.174*	D	2299	601.942, 601.970	M	+/-		01/96 ▸ 09/03	0085425617	**700050**	14X1.5	19
NISSAN												
Serena (C23M)												
1.6 i	*EAYVLGF, AAYVLEF, AAYVLGF, EAYVLEF*	E	1597	GA16DEE	M			07/92 ▸ 11/01	250809F900	**700042**	12X1.25	13
2.0 i	*EBYALGF, ABYALGF, ABYALHF*	E	1998	SR20DEA	M			07/92 ▸ 11/01	250809F900	**700042**	12X1.25	13
2.0 D	*EVEVLEF*	D	1952	LD20	M			07/92 ▸ 09/94	250809F900	**700042**	12X1.25	13
2.3 D	*EVFVLGF, AVFALHF, EVFVLEF, AVFVLEF*	D	2283	LD23	M			09/94 ▸ 11/01	250809F900	**700042**	12X1.25	13
OPEL												
Agila												
1.0 i 12V		E	973	Z10XE	M			03/00 ▸	1342561	**700005**	1/8X27 NPTF	13
1.0 i 12V		E	973	Z10XE	M			03/00 ▸	6238422	**700028**	12X1.5	19
1.0 i Twinport 12V 19t85745 ▸	*HF68CG*	E	998	Z10XEP	M			08/03 ▸ 12/07	6238422	**700028**	12X1.5	19

• **New** Nouveau **Nuevo** Novo **Nuovo** Nieuw **Neu** **Yeni** Новый Nou

Valeo

Water temperature sensor
Sonde à thermistance
Sensor de temperatura de água
Sensor de temperatura de água
Sensore temperatura acqua
Watertemperatuursensor
Wassertemperaturfühler

Czujnik temperatury wody
Snímač teploty vody
Comutator de temperatură
Su sicklik sensörü
датчик температуры воды

			cc			AC			OE	Valeo	COD.	mm
OPEL (.../...)												
Agila (.../...)												
1.0 i Twinport 12V	*HF68CG*	E	998	Z10XEP	M			08/03 ▸	1342561	**700005**	1/8X27 NPTF	13
1.2 i 16V	*HL68EG*	E	1199	Z12XE	M			03/00 ▸	6238422	**700028**	12X1.5	19
1.2 i 16V	*HL68EG*	E	1199	Z12XE	M			03/00 ▸	1342561	**700005**	1/8X27 NPTF	13
1.2 i Twinport 16V 19t85745 ▸		E	1229	Z12XEP	M			08/03 ▸ 12/07	6238422	**700028**	12X1.5	19
1.2 i Twinport 16V		E	1229	Z12XEP	M			09/04 ▸	1342561	**700005**	1/8X27 NPTF	13
Ascona C (81>88)												
1600	*JC*	E	1584	16N	M	-		08/81 ▸ 08/83	1338477	**700018**	12X1.5	19
1600,1600 S,1600 i	*JC/, JCC438, JCU467, JC4 381/384/481/484/487/488 4A8/4AR/8A8, JU4/11/68/69 GT8/GT9, JU8/68/69*	E	1598	E16NZ, 16SH, C16NZ	M	+/-		08/81 ▸ 08/88	1338477	**700018**	12X1.5	19
1600,1600 S,1600 i	*JC/, JCC458, JCU567, JC4 581/584/586/587/588/589 5R8, JU5/11/68/69/GT1/GT8*	E	1598	E16NZ, 16SH	A	+/-		08/81 ▸ 08/88	1338477	**700018**	12X1.5	19
Astra F (91>98)												
1.4,1.4 i,1.4 i 16V	*TA1/308/319/368, TA4/306 308/319/368/408/419/435 468, TAC/408/419/468, TAK 136/436*	E	1389	C14NZ, X14NZ, C14SE, X14XE 14NV, 14SE	M			09/91 ▸ 02/01	1342561	**700005**	1/8X27 NPTF	13
1.4,1.4 i,1.4 i 16V	*TA1/308/319/368, TA4/306 308/319/368/408/419/435 468, TAC/408/419/468, TAK 136/436*	E	1389	C14NZ, 14SE, X14XE, X14NZ C14SE, 14NV	M			09/91 ▸ 02/01	1338458	**700019**	12X1.5	19
1.4 i,1.4 i 16V	*TA6/308/319/368*	E	1389	C14SE, X14XE, 14SE	A			09/91 ▸ 02/01	1342561	**700005**	1/8X27 NPTF	13
1.4 i,1.4 i 16V	*TA6/308/319/368*	E	1389	14SE, C14SE, X14XE	A			09/91 ▸ 02/01	1338458	**700019**	12X1.5	19
1.6 i,1.6 i 16V	*TAM/301/306/308/319/368 TAN/408/419/468*	E	1598	C16NZ, X16SZ, C16SE, X16SZR X16XEL, 16LZ2	M	+/-		09/91 ▸ 01/98	1342569	**700005**	1/8X27 NPTF	13
1.6 i,1.6 i 16V	*TAM/301/306/308/319/368 TAN/408/419/468*	E	1598	X16XEL, X16SZR, X16SZ, 16LZ2 C16SE, C16NZ	M			09/91 ▸ 02/01	1338458	**700019**	12X1.5	19
1.6 i,1.6 i 16V	*TAM/608/619/668, TAN/608 619/668*	E	1598	C16SE, X16SZ, X16SZR, C16NZ X16XEL	A	+/-		09/91 ▸ 02/01	1342569	**700005**	1/8X27 NPTF	13
1.6 i,1.6 i 16V	*TAM/608/619/668, TAN/608 619/668*	E	1598	X16XEL, X16SZR, C16SE, X16SZ C16NZ	A			09/91 ▸ 02/01	1338458	**700019**	12X1.5	19
1.8 i		E	1796	C18NZ	M			09/91 ▸ 08/94	1342561	**700005**	1/8X27 NPTF	13
1.8 i		E	1796	C18NZ	M			09/91 ▸ 08/94	1338458	**700019**	12X1.5	19
1.8 i		E	1796	C18NZ	A			09/91 ▸ 08/94	1342561	**700005**	1/8X27 NPTF	13
1.8 i		E	1796	C18NZ	A			09/91 ▸ 08/94	1338458	**700019**	12X1.5	19
1.8 i 16V		E	1799	C18XE, X18XE	M			07/93 ▸ 02/01	1342850	**700021**	12X1.5	19
1.8 i 16V	*TAKU46*	E	1799	C18XEL, C18XE, X18XE	M			07/93 ▸ 02/01	1342561	**700005**	1/8X27 NPTF	13
1.8 i 16V		E	1799	X18XE	A			08/94 ▸ 02/01	1342561	**700005**	1/8X27 NPTF	13
1.8 i 16V		E	1799	X18XE	A			08/94 ▸ 02/01	1342850	**700021**	12X1.5	19
2.0 i,2.0 i 16V	*TAD/3G0, TAKD46, TAJ/3G0 3G1/3G6*	E	1998	C20XE, C20NE	M			09/91 ▸ 01/98	1338458	**700019**	12X1.5	19
2.0 i,2.0 i 16V	*TAD/3G0, TAKD46, TAJ/3G0 3G1/3G6, TAW/300/401/406*	E	1998	C20NE, C20XE, X20XEV	M			09/91 ▸ 01/98	1342569	**700005**	1/8X27 NPTF	13
2.0 i 16V	*TAJ/3G0/3G1/3G6*	E	1998	C20XE	M	-		07/94 ▸ 01/98	1338457	**700023**	12X1.5	19
2.0 i 16V	*TAW/300/401/406*	E	1998	X20XEV	M			07/94 ▸ 01/98	1342850	**700021**	12X1.5	19
2.0 i,2.0 i 16V	*TAW/600/601/606*	E	1998	C20NE, X20XEV	A			09/91 ▸ 01/98	1342569	**700005**	1/8X27 NPTF	13
2.0 i		E	1998	C20NE	A			09/91 ▸ 02/01	1338458	**700019**	12X1.5	19
2.0 i 16V	*TAW/600/601/606*	E	1998	X20XEV	A			07/94 ▸ 01/98	1342850	**700021**	12X1.5	19
1.7 TD Turbo	*TA9/419/468/4E0/4E1/4E6*	D	1686	17TD	M	+/-		09/91 ▸ 01/98	1342561	**700005**	1/8X27 NPTF	13
1.7 D,1.7 TD 1.7 TD Ecoturbo	*TAA/408/419/468*	D	1699	X17DTL, 17DR	M			09/91 ▸ 01/98	1342569	**700005**	1/8X27 NPTF	13
Astra G (98>)												
1.6 i GNV		G	1598	Z16YNG	M			03/03 ▸ 02/04	6238266	**700028**	12X1.5	19
1.2 i 16V		E	1199	Z12XE, X12XE	M	+/-		09/00 ▸	1338467	**700028**	12X1.5	19
1.4 i,1.4 i 16V		E	1389	X14NZ, X14XE, Z14XE	M	+/-		02/98 ▸	1342567	**700005**	1/8X27 NPTF	13
1.4 i		E	1389	X14NZ	M	+/-		09/98 ▸	1338458	**700019**	12X1.5	19
1.4 i 16V		E	1389	X14XE	M			02/98 ▸	1338467	**700028**	12X1.5	19

• **New** Nouveau **Nuevo** Novo **Nuovo** Nieuw **Neu** **Yeni** Новый Nou

OPEL (.../...)

Astra G (98>) (.../...)

1.4 i 16V		E	1389	X14XE, Z14XE	A	+/-		02/98 ▸	1342567	**700005**	1/8X27 NPTF	13
1.4 i 16V		E	1389	X14XE	A			02/98 ▸	1338467	**700028**	12X1.5	19
1.6 i,1.6 i 16V 1.6 i Twinport 16V ▸ 320000001	*BF67IY*	E	1598	Z16XE, Z16XEP, C16SEL, X16XEL X16SZR	M	+/-		12/02 ▸	6238266	**700028**	12X1.5	19
1.6 i		E	1598	X16SZR	M	+/-		09/98 ▸	1338458	**700019**	12X1.5	19
1.6 i,1.6 i 16V		E	1598	X16XEL, C16SEL, X16SZR, Z16XE	A			12/02 ▸	6238266	**700028**	12X1.5	19
1.6 i,1.6 i 16V		E	1598	X16SZR, Z16XE, Z16SE/E4	A			02/98 ▸	1342567	**700005**	1/8X27 NPTF	13
1.6 i,1.6 i 16V,1.6 i Twinport 16V ▸ 22999999		E	1598	X16SZR, X16XEL, Z16XEP, Z16SE/E2 Z16XE, Z16SE/E4	M			09/00 ▸	1342567	**700005**	1/8X27 NPTF	13
2.0 i Turbo 16V		E	1998	Z20LET	M	+/-		03/01 ▸	1338467	**700028**	12X1.5	19
2.2 i 16V	*0BP07P, BF67P1*	E	2198	Z22SE	M	+/-		10/99 ▸ 06/05	1338441	**700018**	12X1.5	19
2.2 i 16V	*0BP07P, BF67P1*	E	2198	Z22SE	A	+/-		10/99 ▸ 12/05	1338441	**700018**	12X1.5	19
1.7 DTi 16V	*TU35JA*	D	1686	Y17DT	M			02/00 ▸ 02/04	6238236	**700020**	3/8X18 NPT	19
1.7 CDTI	*TU35JF*	D	1686	Z17DTL	M			04/03 ▸ 02/04	6235605	**700028**	12X1.5	19
1.7 TD,1.7 TD Ecoturbo		D	1699	X17DTL	M			02/98 ▸	6238236	**700020**	3/8X18 NPT	19
2.0 DTi 16V,2.0 Di 16V		D	1995	Y20DTH, Y20DTL, X20DTL	M			02/98 ▸	1338467	**700028**	12X1.5	19
2.0 DTi 16V,2.0 Di 16V		D	1995	Y20DTH, Y20DTL, X20DTL	A			02/98 ▸	1338467	**700028**	12X1.5	19

Astra H (2004>)

1.4 i Twinport 16V		E	1364	Z14XEP	M	+/-		03/04 ▸	6238422	**700028**	12X1.5	19
1.6 i Twinport 16V		E	1598	Z16XEP	M	+/-		03/04 ▸	6238266	**700028**	12X1.5	19
1.6 i Twinport 16V		E	1598	Z16XEP	M			03/04 ▸	1342567	**700005**	1/8X27 NPTF	13
1.6 i Twinport 16V		E	1598	Z16XEP	A	+/-		03/04 ▸	6238266	**700028**	12X1.5	19
1.6 i Twinport 16V		E	1598	Z16XEP	A			03/04 ▸	1342567	**700005**	1/8X27 NPTF	13
2.0 i Turbo 16V		E	1998	Z20LEL, Z20LER	M	+/-		03/04 ▸	1338467	**700028**	12X1.5	19
1.7 CDTI,1.7 CDTI 16V		D	1686	Z17DTH, Z17DTL	M			03/04 ▸	6235605	**700028**	12X1.5	19

Corsa A (82>93)

1.3 i		E	1297	C13N	M			09/86 ▸ 09/90	1338477	**700018**	12X1.5	19

Corsa B (93>2000)

1.0 i 12V	*S93/CN1/DN1*	E	973	X10XE	M	+/-		03/97 ▸ 08/00	1342561	**700005**	1/8X27 NPTF	13
1.0 i 12V	*S93/CN1/DN1*	E	973	X10XE	M	+/-		03/97 ▸ 08/00	1338467	**700028**	12X1.5	19
1.2 i	*S93/CB1/DB1*	E	1195	C12NZ, X12SZ	M	+/-		03/93 ▸ 08/00	1342561	**700005**	1/8X27 NPTF	13
1.2 i	*S93/CB1/DB1*	E	1195	X12SZ, C12NZ	M	+/-		01/97 ▸ 08/00	1338511	**700028**	12X1.5	19
1.2,1.2 i	*S93/CB1/DB1*	E	1195	12NZ, C12NZ, X12SZ	M			03/93 ▸ 1994	1338458	**700019**	12X1.5	19
1.2 i 16V		E	1199	X12XE	M	+/-		03/98 ▸ 08/00	1342561	**700005**	1/8X27 NPTF	13
1.2 i 16V		E	1199	X12XE	M	+/-		03/98 ▸ 08/00	1338467	**700028**	12X1.5	19
1.2 i 16V		E	1199	X12XE	A	+/-		03/98 ▸ 08/00	1338467	**700028**	12X1.5	19
1.2 i 16V		E	1199	X12XE	A	+/-		03/98 ▸ 08/00	1342561	**700005**	1/8X27 NPTF	13
1.4 i,1.4 i 16V	*S93/CJ1/CM1/DJ1/DM1*	E	1389	X14SZ, C14SE, C14NZ, X14XE	M	+/-		03/93 ▸ 12/97	1338458	**700019**	12X1.5	19
1.4 i,1.4 i 16V	*S93/CJ1/DJ1*	E	1389	X14XE, C14NZ, C14SE	M	+/-		03/93 ▸ 08/00	1342569	**700005**	1/8X27 NPTF	13
1.4 i	*S93/CM1/DM1*	E	1389	X14SZ, C14NZ, C14SE	M	+/-		01/98 ▸ 08/00	1338511	**700028**	12X1.5	19
1.4 i,1.4 i 16V	*S93/CJ1/CM1/DJ1/DM1*	E	1389	X14XE, C14NZ, X14SZ	A	+/-		09/93 ▸ 12/97	1338458	**700019**	12X1.5	19
1.4 i,1.4 i 16V	*S93/CJ1/DJ1*	E	1389	C14NZ, X14XE	A	+/-		09/93 ▸ 08/00	1342569	**700005**	1/8X27 NPTF	13
1.4 i	*S93/CM1/DM1*	E	1389	C14NZ, X14SZ	A	+/-		01/98 ▸ 08/00	1338511	**700028**	12X1.5	19
1.6 i 16V		E	1598	C16XE	M	+/-		03/93 ▸ 12/97	1338458	**700019**	12X1.5	19
1.6 i,1.6 i 16V		E	1598	C16XE, X16XE, C16SEL	M	+/-		03/93 ▸ 08/00	1342569	**700005**	1/8X27 NPTF	13
1.6 i		E	1598	C16SEL	M	+/-		01/98 ▸ 08/00	1338511	**700028**	12X1.5	19
1.5 D,1.5 TD		D	1488	15TD, 15D	M	+/-		03/93 ▸ 08/00	1342561	**700005**	1/8X27 NPTF	13
1.7 D	*S93/CL1/DL1*	D	1686	X17D	M	+/-		07/95 ▸ 08/00	1342561	**700005**	1/8X27 NPTF	13

Corsa C (2000>2003)

1.0 i 12V	*0AB/08C/68C*	E	973	Z10XE	M	+/-		09/00 ▸	6238422	**700028**	12X1.5	19
1.2 i 16V	*0AB/08E/68E, 0AE/08E/68E* *0AS/08E/68E*	E	1199	Z12XE	M	+/-		09/00 ▸	6238422	**700028**	12X1.5	19
1.4 i 16V	*0AE/08G/68G, 0AS/08G/68G*	E	1389	Z14XE	M	+/-		09/00 ▸ 12/02	1342567	**700005**	1/8X27 NPTF	13
1.4 i 16V	*0AE/08G/68G, 0AS/08G/68G*	E	1389	Z14XE	M	+/-		01/03 ▸ 08/03	6238266	**700028**	12X1.5	19
1.4 i 16V	*0AE08G*	E	1389	Z14XE	A	+/-		09/00 ▸ 12/02	1342567	**700005**	1/8X27 NPTF	13
1.4 i 16V	*0AE/08G/68G*	E	1389	Z14XE	A	+/-		01/03 ▸ 08/03	6238266	**700028**	12X1.5	19

• **New** Nouveau **Nuevo** Novo **Nuovo** Nieuw **Neu** **Yeni** Новый Nou

Valeo

Water temperature sensor
Sonde à thermistance
Sensor de temperatura de água
Sensor de temperatura de água
Sensore temperatura acqua
Watertemperatuursensor
Wassertemperaturfühler

Czujnik temperatury wody
Snímač teploty vody
Comutator de temperatură
Su sicklik sensörü
датчик температуры воды

Type Ctr.	cc		AC		2 3	OE	Valeo	COD.	mm
OPEL (.../...)									
Corsa C (2000>2003) (.../...)									
1.7 DI 16V,1.7 DTi 16V *0AB/08J/68J, 0AE/08J/68J 0AS/08J/68J*	D	1686	Y17DTL, Y17DT	M	+/-		09/00 ▸	6238236	**700020**	3/8X18 NPT	19
Corsa C (2003>)									
1.0 i Twinport 12V *AB68CF, AC08CF, AC68CF AB0/8CF*	E	998	Z10XEP	M	+/-		09/03 ▸	6238422	**700028**	12X1.5	19
1.2 i 16V *AB68EE, AB0/8EE, AC0/8EB 8EE, AC6/8EB/8EE, AE0/8EB 8EE, AE6/8EB/8EE, AS0/8EB 8EE, AS6/8EB/8EE*	E	1199	Z12XE	M	+/-		09/03 ▸ 08/04	6238422	**700028**	12X1.5	19
1.4 i Twinport 16V *F08/GAB/GS5, F68/GAB/GS5*	E	1364	Z14XEP	M	+/-		09/03 ▸	6238422	**700028**	12X1.5	19
1.7 CDTI 16V *AE68JK, AS08JK, AS68JK AE0/8JK*	D	1686	Z17DTH	M	+/-		09/03 ▸	6235605	**700028**	12X1.5	19
Frontera (91>98)									
2.0 i *52SUD2, 55SUD2*	E	1998	C20NE, X20SE	M			03/91 ▸ 09/98	1342561	**700005**	1/8X27 NPTF	13
2.2 i 16V *54MWL4*	E	2198	X22XE	M			04/95 ▸ 09/98	1342561	**700005**	1/8X27 NPTF	13
2.4 i *53MWL4*	E	2410	C24NE	M			03/91 ▸ 04/95	1342561	**700005**	1/8X27 NPTF	13
2.3 TD *5JM/UL4/WL4*	D	2260	23DTR	M			03/91 ▸ 04/95	1342561	**700005**	1/8X27 NPTF	13
2.5 TDS *5KMWL4, 5KSUD2*	D	2499	25TDS	M	+/-		06/96 ▸ 09/98	1342852	**700022**	12X1.5	19
Frontera (98>)									
2.2 i 16V *6B0/VF/ZC, 6B1/66/VF/ZC*	E	2198	X22SE, Y22SE	M			10/98 ▸	1338477	**700018**	12X1.5	19
3.2 i V6 24V	E	3165	6VD1	M			10/98 ▸	6238236	**700020**	3/8X18 NPT	19
3.2 i V6 24V	E	3165	6VD1	M			10/98 ▸	1338507	**700043**	1/8 GAS	13
3.2 i V6 24V	E	3165	6VD1	A			10/98 ▸	1338507	**700043**	1/8 GAS	13
3.2 i V6 24V	E	3165	6VD1	A			10/98 ▸	6238236	**700020**	3/8X18 NPT	19
2.2 DTi 16V *6B166, 6B0/66/76*	D	2171	Y22DTH(120)	M			03/01 ▸	1342561	**700005**	1/8X27 NPTF	13
2.2 DTi 16V *6B166, 6B0/66/76*	D	2171	Y22DTH(120)	M			03/01 ▸	1338467	**700028**	12X1.5	19
2.2 DTi 16V *6B0/76, 6B1/66/76*	D	2171	Y22DTH(120)	A			03/01 ▸	1338467	**700028**	12X1.5	19
2.2 DTi 16V *6B0/76, 6B1/66/76*	D	2171	Y22DTH(120)	A			03/01 ▸	1342561	**700005**	1/8X27 NPTF	13
2.2 DTi 16V	D	2172	X22DTH	M			10/98 ▸	1342561	**700005**	1/8X27 NPTF	13
2.2 DTi 16V	D	2172	X22DTH	M			10/98 ▸	1338467	**700028**	12X1.5	19
2.2 DTi 16V	D	2172	X22DTH	A			10/98 ▸	1338467	**700028**	12X1.5	19
2.2 DTi 16V	D	2172	X22DTH	A			10/98 ▸	1342561	**700005**	1/8X27 NPTF	13
Kadett E (84>91)									
1.2 S *T5435, T5835, E83/543/544/583/584*	E	1196	12S, 12ST	M			08/84 ▸	1342561	**700005**	1/8X27 NPTF	13
1.3,1.3 S *E83/943/944/94B/984/98B E84/943/944/94B/94R/983 984, T94/08/19/35/48/GT T98/08/19/48*	E	1297	13S, C13N	M			08/84 ▸	1342561	**700005**	1/8X27 NPTF	13
1.3	E	1297	C13N	M			09/86 ▸ 1991	1338477	**700018**	12X1.5	19
1.3 S *E83/953/954/95B, E84/953/954/95B T95/08/19/48*	E	1297	13S	A			08/84 ▸	1342561	**700005**	1/8X27 NPTF	13
1.6 S,1.6 i *E83/444/44B/483/484/48B E84/443/444/44B/483/484 48B/4CR, TU4/19/35/48/GT TU8/08/19/35/48*	E	1598	16SV, 16S-OHC, E16NZ, C16LZ	M			08/84 ▸	1342561	**700005**	1/8X27 NPTF	13
1.6 i	E	1598	C16NZ	M			09/86 ▸ 1991	1338458	**700019**	12X1.5	19
1.6,1.6 S,1.6 i *E83/453/454/45B/954 TU319, E84/453/454/45B TU5/48/GT*	E	1598	16S-OHC, C16NZ, 16SV	A			08/84 ▸	1342561	**700005**	1/8X27 NPTF	13
1.6 i	E	1598	C16NZ	A			09/86 ▸ 1991	1338458	**700019**	12X1.5	19
1.6 S ▸ J2791967	E	1598	C16LZ	M			09/86 ▸ 1988	850413	**700018**	12X1.5	19
1.8 E,1.8 i *E82/W34, TW3/08/19/48/T08 T19/T35/T48*	E	1796	18SE, 18E	M			08/84 ▸	1342561	**700005**	1/8X27 NPTF	13
1.8 i	E	1796	C18NE, C18NZ	M			09/86 ▸ 1991	1338458	**700019**	12X1.5	19
1.8 i	E	1796	C18NE	A			09/86 ▸	1342561	**700005**	1/8X27 NPTF	13
2.0 i,2.0 i 16V *TB3/67, TK308, TH3/08/48*	E	1998	C20NE, C20XE, 20SEH, 20XE	M			09/86 ▸	1342561	**700005**	1/8X27 NPTF	13

• **New** Nouveau **Nuevo** Novo **Nuovo** Nieuw **Neu** **Yeni** Новый Nou

			CC		AC			OE	Valeo	COD.	mm	
OPEL (.../...)												
Kadett E (84>91) (.../...)												
1.6 D	*E83/T44/T83/T84/TT4, E84/T43/T44 T4B/T83/T84/T8B, TT4/08/19/35, TT8 08/19/35/48*	D	1598	16D	M			08/84 ▸ 1989	1342561	**700005**	1/8X27 NPTF	13
1.6 D	*E83/T53/T54, E84/T53/T54/T5B, TT5 08/19/35/48*	D	1598	16D	A			08/84 ▸ 1989	1342561	**700005**	1/8X27 NPTF	13
1.7 D	*TF4/08/19*	D	1699	17DV	M			01/89 ▸	1342561	**700005**	1/8X27 NPTF	13
Meriva												
1.4 i Twinport 16V		E	1364	Z14XEP	M	+/-		09/04 ▸	6238422	**700028**	12X1.5	19
1.6 i,1.6 i 16V		E	1598	Z16XE, Z16SE/E4	M			05/03 ▸	6238266	**700028**	12X1.5	19
1.6 i 16V		E	1598	Z16XEP	M			08/04 ▸	1342567	**700005**	1/8X27 NPTF	13
1.7 DTi 16V		D	1686	Y17DT	M			05/03 ▸	6238236	**700020**	3/8X18 NPT	19
1.7 CDTi 16V		D	1686	Z17DTH	M			08/03 ▸	6235605	**700028**	12X1.5	19
Monterey (91>98)												
3.2 i V6 24V	*UBS/25D/25G*	E	3165	6VDI	M			04/92 ▸ 06/98	6238236	**700020**	3/8X18 NPT	19
3.2 i V6 24V	*UBS/25D/25G*	E	3165	6VDI	M			04/92 ▸ 06/98	1338507	**700043**	1/8 GAS	13
3.2 i V6 24V	*UBS/25D/25G*	E	3165	6VDI	A			04/92 ▸ 06/98	6238236	**700020**	3/8X18 NPT	19
3.2 i V6 24V	*UBS/25D/25G*	E	3165	6VDI	A			04/92 ▸ 06/98	1338507	**700043**	1/8 GAS	13
Monterey (98>99)												
3.5 i V6 24V	*UBS/26D/26G*	E	3494	6VE1	M			07/98 ▸ 08/99	6238236	**700020**	3/8X18 NPT	19
3.5 i V6 24V	*UBS/26D/26G*	E	3494	6VE1	M			07/98 ▸ 08/99	1338507	**700043**	1/8 GAS	13
3.5 i V6 24V	*UBS/26D/26G*	E	3494	6VE1	A			07/98 ▸ 08/99	6238236	**700020**	3/8X18 NPT	19
3.5 i V6 24V	*UBS/26D/26G*	E	3494	6VE1	A			07/98 ▸ 08/99	1338507	**700043**	1/8 GAS	13
3.0 DTI	*UBS/73D/73G*	D	2999	4JX1	M			07/98 ▸ 08/99	6238236	**700020**	3/8X18 NPT	19
Omega A (86>94)												
1.8,1.8 i	*VV4/19/35, VW4/19/35*	E	1796	S18NV, E18NVR, 18SV, 18SEH 18NV	M			10/86 ▸ 02/94	1342561	**700005**	1/8X27 NPTF	13
1.8,1.8 i	*VV6/19/35, VW6/19/35*	E	1796	E18NVR, 18SEH, S18NV, 18SV	A			10/86 ▸ 02/94	1342561	**700005**	1/8X27 NPTF	13
2.0 i	*VC4/19/35, VC0/419/435, VD4/19/35*	E	1998	20SE, C20NE	M			10/86 ▸ 02/94	1342569	**700005**	1/8X27 NPTF	13
2.0 i	*VC6/19/35, VC0/619/635, VD6/19/35*	E	1998	C20NE, 20SE	A			10/86 ▸ 02/94	1342569	**700005**	1/8X27 NPTF	13
2.4 i	*VM419, VM0635*	E	2410	C24NE	M			10/88 ▸ 07/91	1342561	**700005**	1/8X27 NPTF	13
2.4 i	*VM619, VM0619*	E	2410	C24NE	A			10/88 ▸ 07/91	1342561	**700005**	1/8X27 NPTF	13
2.6 i	*VL0/435, VL0419, VL4/19/35*	E	2594	C26NE	M			08/90 ▸ 02/94	1342569	**700005**	1/8X27 NPTF	13
2.6 i	*VL0/619/635, VL6/19/35*	E	2594	C26NE	A			08/90 ▸ 02/94	1342569	**700005**	1/8X27 NPTF	13
3000 i,3000 i 24V	*VN4S19, JK3/G19, VQL619 VQ4/19/35, VR0/419/435 VR4/19/35*	E	2968	C30NE, 30NE, C30SE, C30LE	M			02/87 ▸ 02/94	1342569	**700005**	1/8X27 NPTF	13
3000 i,3000 i 24V	*VQ619, VN6/S19, VR0/435 619, VSQ619, VR6/19/35*	E	2968	30NE, C30SE, C30NE, C30LE	A			02/87 ▸ 02/94	1342569	**700005**	1/8X27 NPTF	13
2.3 D,2.3 TD	*VE4/19/35, VE0/419/435 VF0419, VF4/19/35, VG0 419/435, VG4/19/35*	D	2260	23YDT, 23DTR, 23YD	M			10/86 ▸ 02/94	1342561	**700005**	1/8X27 NPTF	13
2.3 D,2.3 TD	*VE0619, VE6/19/35, VF0619 VF6/19/35, VG619, VG0 619/635*	D	2260	23YDT, 23DTR, 23YD	A			10/86 ▸ 02/94	1342561	**700005**	1/8X27 NPTF	13
Omega B (94>)												
2.2 i 16V		E	2198	Z22XE	M	+/-		08/99 ▸	1342561	**700005**	1/8X27 NPTF	13
2.2 i 16V		E	2198	Z22XE	A	+/-		08/99 ▸	1342561	**700005**	1/8X27 NPTF	13
2.5 TD	*M35/, VB9/406/469*	D	2497	U25TD	M	+/-		02/94 ▸ 01/97	1338454	**700022**	12X1.5	19
2.5 TD	*M35/, VB9/606/669*	D	2497	U25TD	A	+/-		02/94 ▸ 01/97	1338454	**700022**	12X1.5	19
Senator B (87>93)												
2.5 i	*VJ419*	E	2490	25NE	M			02/87 ▸ 08/90	1342569	**700005**	1/8X27 NPTF	13
2.5 i	*VJ419*	E	2490	25NE	M			02/87 ▸ 08/90	1338457	**700023**	12X1.5	19
2.5 i	*VJ619, VJA601*	E	2490	25NE	A			02/87 ▸ 08/90	1338457	**700023**	12X1.5	19
2.5 i	*VJ619, VJA601*	E	2490	25NE	A			02/87 ▸ 08/90	1342569	**700005**	1/8X27 NPTF	13
2.6 i	*VP19L*	E	2594	C26NE	M			08/90 ▸ 06/93	1342569	**700005**	1/8X27 NPTF	13
2.6 i	*VP19LA*	E	2594	C26NE	A			08/90 ▸ 06/93	1342569	**700005**	1/8X27 NPTF	13
3.0 i	*VNA419, VQ419, VN4/19*	E	2968	30NE, C30NE	M			02/87 ▸ 06/93	1338457	**700023**	12X1.5	19

• **New** Nouveau **Nuevo** Novo **Nuovo** Nieuw **Neu** **Yeni** Новый Nou

Valeo

Water temperature sensor
Sonde à thermistance
Sensor de temperatura de água
Sensor de temperatura de água
Sensore temperatura acqua
Watertemperatuursensor
Wassertemperaturfühler

Czujnik temperatury wody
Snímač teploty vody
Comutator de temperatură
Su sicklik sensörü
датчик температуры воды

			cc			AC			OE	Valeo	COD.	mm
OPEL (.../...)												
Senator B (87>93) (.../...)												
3.0 i,3.0 i 24V	*VNA419, VQ419, VSR419 VN4/19*	E	2968	30NE, C30SE, C30LE, C30NE	M			02/87 ▸ 06/93	1342569	**700005**	1/8X27 NPTF	13
3.0 i,3.0 i 24V	*VQ619, VN6/19, VSR/061 619*	E	2968	C30LE, C30NE, 30NE, C30SE	A			02/87 ▸ 08/93	1342569	**700005**	1/8X27 NPTF	13
3.0 i	*VN619, VQ619*	E	2968	30NE, C30NE	A			02/87 ▸ 06/93	1338457	**700023**	12X1.5	19
Signum												
2.0 i Turbo 16V	*ONP48, ONS48, ONU48, ONK 48*	E	1998	Z20NET	M			06/03 ▸	6238935	**700028**	12X1.5	19
2.2 DIG 16V	*ONP48, ONS48, ONU48, ONK 48*	E	2198	Z22YH	M			06/03 ▸	1338441	**700018**	12X1.5	19
2.2 DIG 16V	*ONP48, ONS48, ONU48, ONK 48*	E	2198	Z22YH	A			06/03 ▸	1338441	**700018**	12X1.5	19
3.2 i V6 24V	*ONP48, ONS48, ONU48, ONK 48*	E	3175	Z32SE	M			06/03 ▸	6238422	**700028**	12X1.5	19
3.2 i V6 24V	*ONP48, ONS48, ONU48, ONK 48*	E	3175	Z32SE	A			06/03 ▸	6238422	**700028**	12X1.5	19
2.0 DTi 16V	*ONK48, ONU48*	D	1995	Y20DTH	M			06/03 ▸	6238179	**700028**	12X1.5	19
2.2 DTI 16V	*ONP48, ONS48, ONU48, ONK 48*	D	2171	Y22DTR	M			06/03 ▸	6238179	**700028**	12X1.5	19
2.2 DTI 16V	*ONP48, ONS48, ONU48, ONK 48*	D	2171	Y22DTR	A			06/03 ▸	6238179	**700028**	12X1.5	19
Sintra												
2.2 i 16V	*U06A*	E	2198	X22XE	M	+/-		03/96 ▸ 12/99	1338467	**700028**	12X1.5	19
3.0 i V6 24V	*U06/8*	E	2962	X30XE	A	+/-		03/96 ▸ 12/99	1338467	**700028**	12X1.5	19
Speedster												
2.0 i Turbo 16V		E	1998	Z20LET	M	+/-		03/03 ▸ 09/05	1338467	**700028**	12X1.5	19
Tigra (94>2003)												
1.4 i 16V	*F07* W6000001 ▸	E	1389	X14XE	M			1998 ▸ 2000	1338511	**700028**	12X1.5	19
1.4 i 16V	*F07*	E	1389	X14XE	M			10/94 ▸	1342569	**700005**	1/8X27 NPTF	13
1.4 i 16V	*F07* W4000001 ▸	E	1389	X14XE	A			1998 ▸ 2000	1338511	**700028**	12X1.5	19
1.4 i 16V	*F07*	E	1389	X14XE	A			10/94 ▸	1342569	**700005**	1/8X27 NPTF	13
1.6 i 16V	*F07* W3000001 ▸	E	1598	X16XE	M			1998 ▸ 2000	1338511	**700028**	12X1.5	19
1.6 i 16V	*F07*	E	1598	X16XE	M			10/94 ▸	1342569	**700005**	1/8X27 NPTF	13
Tigra TwinTop (2004>)												
1.4 i Twinport 16V		E	1364	Z14XEP	M	+/-		07/04 ▸	6238422	**700028**	12X1.5	19
Vectra A (88>95)												
1.8 i		E	1796	18SV	M	+/-		09/88 ▸ 09/95	1342569	**700005**	1/8X27 NPTF	13
1.8 i	*JVT/419/468*	E	1796	C18NZ	M			09/88 ▸ 09/95	1338458	**700019**	12X1.5	19
1.8 i		E	1796	18SV	A	+/-		09/88 ▸ 09/95	1342569	**700005**	1/8X27 NPTF	13
1.8 i	*JVT619*	E	1796	C18NZ	A			09/88 ▸ 09/95	1338458	**700019**	12X1.5	19
Vectra B (95>99)												
1.6 i,1.6 i 16V	*F19, F68*	E	1598	16LZ2, X16XEL	M	+/-		10/95 ▸ 01/99	1342569	**700005**	1/8X27 NPTF	13
1.6 i,1.6 i 16V	*F19, F68*	E	1598	X16SZR, 16LZ2, X16XEL	M	+/-		10/95 ▸ 01/99	1338458	**700019**	12X1.5	19
1.6 i 16V		E	1598	X16XEL	A	+/-		10/95 ▸ 01/99	1342561	**700005**	1/8X27 NPTF	13
1.6 i 16V		E	1598	X16XEL	A	+/-		10/95 ▸ 01/99	1338458	**700019**	12X1.5	19
1.8 i 16V	*F19, F68*	E	1799	X18XE	M	+/-		10/95 ▸ 01/99	1342569	**700005**	1/8X27 NPTF	13
1.8 i 16V	*F19, F68*	E	1799	X18XE	M	+/-		10/95 ▸ 12/97	1342850	**700021**	12X1.5	19
1.8 i 16V		E	1799	X18XE	A	+/-		10/96 ▸ 01/99	1342569	**700005**	1/8X27 NPTF	13
1.8 i 16V		E	1799	X18XE	A	+/-		10/96 ▸ 12/97	1342850	**700021**	12X1.5	19
2.0 i	*F19, F68*	E	1998	20NEJ	M	+/-		10/95 ▸ 01/99	1338458	**700019**	12X1.5	19
2.0 i,2.0 i 16V	*F19, F68*	E	1998	X20XEV, 20NEJ	M	+/-		10/95 ▸ 01/99	1342569	**700005**	1/8X27 NPTF	13
2.0 i,2.0 i 16V	*F19, F68*	E	1998	X20XEV, 20NEJ	A	+/-		10/95 ▸ 01/99	1342569	**700005**	1/8X27 NPTF	13
2.0 i	*F19, F68*	E	1998	20NEJ	A	+/-		10/95 ▸ 01/99	1338458	**700019**	12X1.5	19

• **New** Nouveau **Nuevo** Novo **Nuovo** Nieuw **Neu** **Yeni** Новый Nou

			CC		AC			OE	Valeo	COD.	mm	
OPEL (.../...)												
Vectra B (95>99) (.../...)												
2.5 i V6 24V,2.5 i500 V6 24V		E	2498	X25XE-170, X25XE-195	M	+/-		10/95 ▸ 01/99	1342569	**700005**	1/8X27 NPTF	13
2.5 i V6 24V		E	2498	X25XE-170	M	+/-		10/95 ▸ 12/97	1338458	**700019**	12X1.5	19
2.5 i V6 24V		E	2498	X25XE-170	A	+/-		10/95 ▸ 12/97	1338458	**700019**	12X1.5	19
2.5 i V6 24V		E	2498	X25XE-170	A	+/-		10/95 ▸ 01/99	1342569	**700005**	1/8X27 NPTF	13
1.7 TD		D	1686	X17DT	M	+/-		10/95 ▸ 01/99	1342569	**700005**	1/8X27 NPTF	13
2.0 Di 16V,2.0 TDi 16V		D	1995	X20DTH, X20DTL	M	+/-		10/96 ▸ 01/99	1342561	**700005**	1/8X27 NPTF	13
2.0 Di 16V,2.0 TDi 16V		D	1995	X20DTL, X20DTH	M	+/-		10/96 ▸ 01/99	1338467	**700028**	12X1.5	19
Vectra B (99>2002)												
2.2 i 16V	*0JU/19P/35P/68P, 0JX/19P 35P/68P*	E	2198	Z22SE	M			02/99 ▸	1338441	**700018**	12X1.5	19
2.2 i 16V	*0JU/35P/68P, 0JX/19P/68P*	E	2198	Z22SE	A	+/-		02/99 ▸	1338441	**700018**	12X1.5	19
2.0 DTi 16V	*0JU/19M/35M/68M, 0JX/19M 35M/68M*	D	1995	Y20DTH	M			02/99 ▸	1342561	**700005**	1/8X27 NPTF	13
2.0 DTi 16V	*0JU/19M/35M/68M, 0JX/19M 35M/68M*	D	1995	Y20DTH	M			02/99 ▸	1338467	**700028**	12X1.5	19
2.2 DTI 16V	*0JU/19P/35P/68P, 0JX/19P 35P/68P*	D	2171	Y22DTR	M			09/00 ▸	1342561	**700005**	1/8X27 NPTF	13
2.2 DTI 16V	*0JU/19P/35P/68P, 0JX/19P 35P/68P*	D	2171	Y22DTR	M			09/00 ▸	1338467	**700028**	12X1.5	19
Vectra C (2002>2005)												
1.6 i 16V		E	1598	Z16XE	M			04/02 ▸	6238266	**700028**	12X1.5	19
2.0 i Turbo 16V	*JS35MY, JW68MY*	E	1998	Z20NET	M			03/03 ▸	6238935	**700028**	12X1.5	19
2.2 DIG 16V,2.2 i 16V	*JW68P1, 0JK69P, 0JU69P JU3/5P3*	E	2198	Z22YH, Z22SE	M			04/02 ▸	1338441	**700018**	12X1.5	19
2.2 DIG 16V,2.2 i 16V	*JW68P1, 0JK69P, 0JU69P JU3/5P2*	E	2198	Z22SE, Z22YH	A			04/02 ▸	1338441	**700018**	12X1.5	19
3.2 i V6 24V	*0JV/35Z/68Z*	E	3175	Z32SE	M			06/02 ▸	6238422	**700028**	12X1.5	19
3.2 i V6 24V	*0JV/35Z/68Z*	E	3175	Z32SE	A			06/02 ▸	6238422	**700028**	12X1.5	19
2.0 DTi 16V	*JV68, 0J, 0JK69M, 0JU69M JK3/5MV*	D	1995	Y20DTH	M			04/02 ▸	6238179	**700028**	12X1.5	19
2.2 DTI 16V	*JS35PP, JU35PP, JV68PP JW68PP, 0JK69P, 0JU69P 0JV68, JK3/5PP*	D	2171	Y22DTR	M			04/02 ▸	6238179	**700028**	12X1.5	19
2.2 DTI 16V	*JS35PP, JU35PP, JV68PP JW68PP, 0JK69P, 0JU69P JK3/5PP*	D	2171	Y22DTR	A			04/02 ▸	6238179	**700028**	12X1.5	19
Vectra C (2005>)												
1.6 i 16V		E	1598	Z16XE	M			10/05 ▸	1342567	**700005**	1/8X27 NPTF	13
2.0 i Turbo 16V		E	1998	Z20NET	M			10/05 ▸	6238935	**700028**	12X1.5	19
2.2 DIG 16V		E	2198	Z22YH	M			10/05 ▸	1338441	**700018**	12X1.5	19
2.2 DIG 16V		E	2198	Z22YH	A			10/05 ▸	1338441	**700018**	12X1.5	19
2.8 i V6 Turbo 24V		E	2792	Z28NET, Z28NEL	M			10/05 ▸	6338486	**700028**	12X1.5	19
2.8 i V6 Turbo 24V		E	2792	Z28NEL, Z28NET	A			10/05 ▸	6338486	**700028**	12X1.5	19
Zafira (98>2003)												
1.6 i 16V	*W0L0TG*	E	1598	Z16XE, X16XEL, Z16XE/D3	M			01/99 ▸	1338467	**700028**	12X1.5	19
1.6 i 16V	*W0L0TG*	E	1598	X16XEL	A			01/99 ▸	1338467	**700028**	12X1.5	19
1.6 i 16V	*W0L0TG*	E	1598	Z16XE	A			01/99 ▸	1342567	**700005**	1/8X27 NPTF	13
2.2 i 16V	*W0L0TG*	E	2198	Z22SE	A			01/99 ▸	1341856	**700018**	12X1.5	19
18000001 ▸ Y6999999												
2.2 i 16V	*W0L0TG*	E	2198	Z22SE	M			01/99 ▸	1341856	**700018**	12X1.5	19
12000001 ▸ YH999999												
2.0 DT 16V,2.0 DTi 16V	*W0L0TG*	D	1995	Y20DTH, X20DTL	M			01/99 ▸	1338467	**700028**	12X1.5	19
2.0 DT 16V,2.0 DTI 16V	*W0L0TG*	D	1995	X20DTL, Y20DTL	A			01/99 ▸	1338467	**700028**	12X1.5	19
Zafira (2003>2005)												
1.6 i GNV	*QG75IB, QM75IB*	G	1598	Z16YNG	M			▸ 06/05	6238266	**700028**	12X1.5	19
320000001 ▸												
1.6 i GNV	*QG75IB, QM75IB*	G	1598	Z16YNG	M			07/03 ▸	1342567	**700005**	1/8X27 NPTF	13
▸ 229999999												

• **New** Nouveau **Nuevo** Novo **Nuovo** Nieuw **Neu** **Yeni** Новый Nou

Valeo

Water temperature sensor
Sonde à thermistance
Sensor de temperatura de água
Sensor de temperatura de água
Sensore temperatura acqua
Watertemperatuursensor
Wassertemperaturfühler

Czujnik temperatury wody
Snímač teploty vody
Comutator de temperatură
Su sicklik sensörü
датчик температуры воды

Type Ctr.		cc		AC		2 3	OE	Valeo	COD.	mm
OPEL (.../...)										
Zafira (2003>2005) (.../...)										
1.6 i 16V,1.6 i 16V 16V	*QG75IX, QM75IX*	E	1598	Z16XE/D4, Z16XE	M		07/03 ▸	1342567	**700005**	1/8X27 NPTF	13
2.0 i Turbo 16V	*QO75MY*	E	1998	Z20LET	M		07/03 ▸	1338467	**700028**	12X1.5	19
2.2 i 16V ▸ Y29999999	*QD75P1*	E	2198	Z22SE	M		07/03 ▸	1341856	**700018**	12X1.5	19
2.2 i 16V ▸ Y29999999	*QD75P1*	E	2198	Z22SE	A		07/03 ▸	1341856	**700018**	12X1.5	19
2.0 DTI 16V	*QG75MR, QM75MR, QX75MR QD7/5MR*	D	1995	Y20DTH	M		07/03 ▸	1338467	**700028**	12X1.5	19
2.0 DTI 16V 2.0 DTI 16V 16V	*QM75MI, QX75MI, QG7/5MI*	D	1995	Y20DTH	A		07/03 ▸	1338467	**700028**	12X1.5	19
Zafira II (2005>)										
1.6 i 16V		E	1598	Z16XEP	M		07/05 ▸	6238266	**700028**	12X1.5	19
OPEL										
Combo (85>93)										
1.3,1.3 i	*PBV/783/983*	E	1297	C13N, 13S, 13N	M		07/85 ▸ 03/93	1342561	**700005**	1/8X27 NPTF	13
1.3		E	1297	13S	A		07/85 ▸ 06/90	1342561	**700005**	1/8X27 NPTF	13
1.4,1.4 i		E	1389	C14NZ, 14NV	M		09/89 ▸ 03/93	1342561	**700005**	1/8X27 NPTF	13
1.6,1.6 i		E	1598	E16NZ, C16LZ	M		08/86 ▸ 03/93	1342561	**700005**	1/8X27 NPTF	13
1.6		E	1598	C16LZ	A		08/86 ▸ 03/93	1342561	**700005**	1/8X27 NPTF	13
1.6 D	*E5T433*	D	1598	16D	M		07/85 ▸ 06/90	1342561	**700005**	1/8X27 NPTF	13
1.7 D	*PBV438, T3448*	D	1699	17D	M		08/90 ▸ 03/93	1342561	**700005**	1/8X27 NPTF	13
Combo (2001>)										
1.4 i Twinport 16V	*DF25G0*	E	1364	Z14XEP	M		07/04 ▸	6238422	**700028**	12X1.5	19
1.6 i ▸ 33000001	*DC25I1, DF25I1*	E	1598	Z16SE/E4	M		01/03 ▸ 06/04	6238266	**700028**	12X1.5	19
1.6 i ▸ 23999999	*DC25I1, DF25I1*	E	1598	Z16SE/E4	M		10/01 ▸ 12/02	1342567	**700005**	1/8X27 NPTF	13
1.7 DI 16V,1.7 DTi 16V	*DC2/5JC/5JD, DF2/5JC/5JD*	D	1686	Y17DT, Y17DTL	M		10/01 ▸ 06/04	6238236	**700020**	3/8X18 NPT	19
1.7 CDTI 16V	*DF25JK*	D	1686	Z17DTH	M		07/04 ▸	6235605	**700028**	12X1.5	19
Movano										
2.5 D	*FD, JD, UD, ED*	D	2445	S8U.7.72	M		10/98 ▸ 10/01	4401810	**700016**	12X1.5	19
2.8 Dti	*JD*	D	2800	S9W.7.00	M		10/98 ▸ 10/01	4500001	**700021**	12X1.5	19
2.8 Dti	*FD, JD, UD, ED*	D	2800	S9W.7.02, S9W.7.00	M		10/98 ▸ 10/01	4401810	**700016**	12X1.5	19
PEUGEOT										
106 (91>96)										
1.0	*1AC1A1*	E	954	TU9	M	+/-	06/93 ▸ 03/96	133855	●**700056**	14X1.25	19
1.0,1.0 i	*1AC/DY1/DY2/DZ1/DZ2, 1CC 1A1/1A2/DY1/DY2/DZ1/DZ2 1SC/1A1/DY1/DZ2*	E	954	TU9,TU9M,TU9MPR	M	+	09/91 ▸ 03/96	133855	●**700056**	14X1.25	19
1.0 i	*1AC/DY1/DY2/DZ1/DZ2, 1CC/DY1/DY2 DZ1/DZ2, 1SC/DY1/DZ2*	E	954	TU9M, TU9MPR	M	+/-	06/92 ▸ 03/96	024246	**700019**	12X1.5	19
1.1 i	*1AH/DY2/DZ1/DZ2, 1SHDZ2, 1CH/DY1 DY2/DZ1/DZ2/DZ8*	E	1124	TU1M	M	+/-	09/91 ▸ 03/96	024246	**700019**	12X1.5	19
1.3 i	*1CMFZ2*	E	1294	TU2J2	M	+/-	06/93 ▸ 03/96	024246	**700019**	12X1.5	19
1.4 i	*1CK/6B2/FZ2*	E	1360	TU3J2, TU3FJ2	M	+/-	09/91 ▸ 03/96	1920C4	**700014**	12X1.5	19
1.4 i	*1AK/DX8/DY2, 1CK/6B2/DX2/DX8/DY2*	E	1360	TU3M, TU3FMC, TU3J2	M	+/-	09/91 ▸ 03/96	024246	**700019**	12X1.5	19
1.4 i	*1CK/6B2/FZ2*	E	1360	TU3J2, TU3FJ2	M	-	09/91 ▸ 03/96	133809	**700000**	14X1.25	19
1.6 i	*1ANFZ2, 1CNFZ2*	E	1587	TU5JP	M	+/-	06/93 ▸ 03/96	024246	**700019**	12X1.5	19
1.6 i	*1ANFZ2, 1CNFZ2*	E	1587	TU5JP	M	-	06/93 ▸ 03/96	133809	**700000**	14X1.25	19
1.6 i	*1ANFZ4, 1CNFZ4*	E	1587	TU5JP	A	+/-	06/93 ▸ 03/96	024246	**700019**	12X1.5	19
1.6 i	*1CNFY2*	E	1587	TU5J2	M	+	06/93 ▸ 03/96	133855	●**700056**	14X1.25	19
106 (96>2003)										
1.0 i	*1AC/DYE/DZD/DZE/DZW, 1CC/DYE/DZD DZE/DZW, 1SC/DZD/DZE*	E	954	TU9M	M	+/-	03/96 ▸ 07/03	133855	●**700056**	14X1.25	19

• **New** Nouveau **Nuevo** Novo **Nuovo** Nieuw **Neu** **Yeni** Новый Nou

			cc		AC			OE	Valeo	COD.	mm
PEUGEOT (.../...)												
106 (96>2003) (.../...)												
1.1,1.1 i,1.1 i GPL	*1AH/3A2/3A8/DYE/DZD/DZE 1CH/3A2/DYE/DZD/DZE, 1SH DZD/DZE*	E	1124	TU1M+,TU1TR	M	+/-		03/96 ▸ 07/03	133855	●700056	14X1.25	19
1.1 i	*1CHFXF, 1SHFXF, 1AH/FXF*	E	1124	TU1JP	M	+/-		09/00 ▸ 07/03	1338A6	●700054	12X1.5	21
1.4 i	*1AK/FXE/FXS/FXT, 1CK/FXD/FXE/FXS FXT*	E	1360	TU3JP	M	+/-		03/96 ▸ 05/99	133855	●700056	14X1.25	19
1.4 i	*1AKFXL, 1CKFXL*	E	1360	TU3JP	A	+/-		05/97 ▸ 05/99	133855	●700056	14X1.25	19
1.5 D	*1AV/JUF/JXF/JYE/JYF/JZD/JZE/JZF 1CV/JUF/JXF/JYE/JYF/JZD/JZE/JZF 1SV/JXF/JYE/JZD/JZE*	D	1527	TUD5, TUD5B	M	+/-		03/96 ▸ 07/03	133878	700017	14X1.25	19
1.5 D	*1AV/JUF/JXF/JYE/JYF/JZD/JZE/JZF 1CV/JUF/JXF/JYE/JYF/JZD/JZE/JZF 1SV/JXF/JYE/JZD/JZE*	D	1527	TUD5,TUD5B	M	+/-		03/96 ▸ 07/03	133855	●700056	14X1.25	19
1007												
1.4 HDi	*KM8/HXB/HZB*	D	1398	DV4TD	M			04/05 ▸	1338C1	●700055	20	
1.6 HDi 16V	*KM9HZC*	D	1560	DV6TED4	M			02/07 ▸	1338C1	●700055	20	
205												
1.0,1.0 i	*20A/C11/C12/CD1/CD2/N11 N12, 20SC11, 20C/C11/C12 CD1/CD2/L11/N11/N12*	E	954	TU9, TU9M, XV8	M			08/87 ▸ 09/98	133772	700001	14X1.25	17
1.1	*20S/E11/E12*	E	1118	E1	M			08/87 ▸ 07/88	133772	700001	14X1.25	17
1.1 i	*20CHD2, 20DHD2, 20SHD2, 20A/HD2*	E	1124	TU1M	M	+/-		08/89 ▸ 09/98	024246	700019	12X1.5	19
1.1	*20A/F12/H11/H12/H31/H32/L11/L12 20DH12, 20C/H11/H12/H31/L11/L12 M11, 20S/H11/H12*	E	1124	TU1, XW7, F1, TU1TR	M			08/87 ▸ 09/98	133802	700001	14X1.25	17
1.3	*20A/G12, 20SG12, 20C/G12/M22*	E	1294	TU24, G1A, G1	M			08/87 ▸ 06/93	133772	700001	14X1.25	17
1.4 i	*20CKD2, 20DKD2, 20A/KD2*	E	1360	TU3M	M	+/-		08/88 ▸ 09/98	024246	700019	12X1.5	19
1.4	*20A/K11/K12/K22/K31/K32/KA2/KH1 20C/K12/K22/KA2, 20D/K12/K22/KA2 T12, 20S/K11/K12/K31/L11/L12*	E	1360	TU3, XY7, TU3A, TU3.2, TU3S TU3A1, TU3CP	M			08/87 ▸ 09/98	133772	700001	14X1.25	17
1.4	*20DKA2*	E	1360	TU3CP	M			08/87 ▸ 07/88	024261	700039	14X1.25	19
1.6,1.6 i	*20A/BD2/C27, 20C/B62/BD2 20D/B62/BA2/BD2, 741/A27 B66/C27/C66*	E	1580	XU5M, XU51C, XU5J1, XU5J XU5JA, XU5CP	M			02/83 ▸ 09/98	133772	700001	14X1.25	17
1.6,1.6 i	*20A/B14/BD4, 20C/B14/BD4 741/A28/C28*	E	1580	XU5M, XU51C, XU5CP, XU52C	A			02/83 ▸ 09/98	133772	700001	14X1.25	17
1.6	*20CJ22*	E	1592	J2	M			07/89 ▸ 06/93	133772	700001	14X1.25	17
1.8	*741R76*	E	1775	XU8T	M			08/83 ▸ 07/87	133772	700001	14X1.25	17
1.9 i	*20C/B62/D62/DF2/DK2, 20D/DF2/HF2 741/B86/C86*	E	1905	XU9JA, XU9J1, XU9JAZ	M			02/83 ▸ 09/98	133772	700001	14X1.25	17
1.9 i	*20A/DF4, 20C/DF4/DK4, 20D/DF4/DK4*	E	1905	XU9JAZ, XU9JA	A			06/90 ▸ 09/98	133772	700001	14X1.25	17
1.7 D,1.7 TD	*20A/A82/A91/A92, 20C/A82 A91/A92, 20TA92, 20S/A82 A91/A92, 741/A90/A98/C90 C98/S90/S98*	D	1769	XUD7, XUD7T	M			08/83 ▸ 09/98	133772	700001	14X1.25	17
1.9 D	*20CDJ2, 20SDJ2, 20A/DJ2*	D	1905	XUD9	M			08/89 ▸ 09/98	133772	700001	14X1.25	17
206												
1.1 i	*2CHFXF, 2EHFXF, 2SHFXU, 2AH/FXF*	E	1124	TU1JP	M	+/-		09/00 ▸ 09/02	1338A6	●700054	12X1.5	21
1.4 i	*2AK/6C2/6C8/FWF, 2CK/6C2/FWF, 2EK FWA/FWF*	E	1360	TU3JP	M	+/-		09/98 ▸ 02/09	1338A6	●700054	12X1.5	21
1.4 i	*2AKFWR, 2CKFWR*	E	1360	TU3JP	A	+/-		09/00 ▸ 09/02	1338A6	●700054	12X1.5	21
1.6 i 16V	*2AN/FUF/FUU, 2DNFUF 2KNFUF, 2CN/FUF/FUU*	E	1587	TU5JP4	M	+/-		09/00 ▸ 09/02	1338A6	●700054	12X1.5	21
1.6 i 16V	*2CNFUR, 2DNFUR, 2KNFUR 2AN/FUR*	E	1587	TU5JP4	A	+/-		09/00 ▸ 09/05	1338A6	●700054	12X1.5	21
1.4 HDi	*2A8/HXF/HZA, 2C8/HXF/HZA 2S8HXF, 2E8/HXF/HZA*	D	1398	DV4TD	M	+/-		03/02 ▸ 02/09	1338C1	●700055	20	
1.4 HDi	*2C8HZF, 2E8HZF, 2A8/HZF*	D	1398	DV4TD	M			10/04 ▸ 02/09	1338C1	●700055	20	
1.6 HDi,1.6 HDi 16V	*2D9/HZA, 2H9/HYA/HZA, 2J9 HYA/HZA, 2K9/HYA/HZA*	D	1560	DV6TED4	M	+/-		04/04 ▸ 02/09	1338C1	●700055	20	

• **New** Nouveau **Nuevo** Novo **Nuovo** Nieuw **Neu** **Yeni** Новый Nou

Valeo

Water temperature sensor
Sonde à thermistance
Sensor de temperatura de água
Sensor de temperatura de água
Sensore temperatura acqua
Watertemperatuursensor
Wassertemperaturfühler

Czujnik temperatury wody
Snímač teploty vody
Comutator de temperatură
Su sicklik sensörü
датчик температуры воды

			cc		AC			OE	Valeo	COD.	mm
PEUGEOT (.../...)											
206 (.../...)											
1.9 D	2CWJYF, 2SWJYU, 2TWJYU, 2AW/JYF	D	1868	DW8B	M	+/-		09/98 ▸ 09/01	1338A6	●700054	12X1.5	21
2.0 HDi	2AR/HYE/HYF/HYU, 2ERHYF 2KRHYF, 2SRHYE, 2CR/HYE HYF/HYU/HYX	D	1997	DW10TD	M	+/-		09/99 ▸ 10/05	133897	●700054	12X1.5	21
2.0 HDi	2AR/HYE/HYF/HYU, 2ERHYF 2HRHYF, 2KRHYF, 2SRHYE 2CR/HYE/HYF/HYU/HYX	D	1997	DW10TD	M	+/-		11/02 ▸ 06/08	1338C1	●700055	20	
2.0 HDi	2AR/HYE/HYF, 2SRHYE, 2CR HYE/HYF/HYX	D	1997	DW10TD	M	+/-		09/99 ▸ 06/00	1338A6	●700054	12X1.5	21
207											
1.4 e	WCKFVC, WEKFVC, WAK/FVC	E	1360	TU3A	M	+/-		03/06 ▸	1338A6	●700054	12X1.5	21
1.4 HDi	WA8HZC, WC8HZC	D	1398	DV4TD	M	+/-		03/06 ▸	1338C1	●700055	20	
1.6 HDi 16V	WB9HZC, WA9/HXC/HYC/HZC WC9/HXC/HYC/HZC, WE9/HXC HYC/HZC	D	1560	DV6ATED4,DV6TED4	M	+/-		03/06 ▸	1338C1	●700055	20	
306 (93>97)											
1.1 i	7AH/DY2/DZ2, 7CH/DY2/DZ2, 7SH/DY2 DZ2	E	1124	TU1M	M	+/-		02/93 ▸ 02/97	024246	700019	12X1.5	19
1.1 i	7AH/DY2/DZ2, 7CH/DY2/DZ2, 7SH/DY2 DZ2	E	1124	TU1M+, TU1M	M	+/-		02/93 ▸ 02/97	133809	700000	14X1.25	19
1.1 i	7AH/DY2/DZ2, 7CH/DY2/DZ2, 7SH/DY2 DZ2	E	1124	TU1M	M			02/93 ▸ 02/97	1920C4	700014	12X1.5	19
1.1 i	7AH/DY2/DZ2, 7SHDZ2, 7CH/DY2/DZ2	E	1124	TU1M+	M			09/94 ▸ 02/97	1920K9	700015	12X1.5	19
1.4,1.4 i	7AK/2D2/3A2/DX2/DX9, 7BK 2D2/2D9/3A2/DX2/DX9/FX2 7CK/2D2/DX2/DX9, 7SK/2D2 DX2	E	1360	TU3, TU3.2, TU3MC, TU3JP	M	+/-		02/93 ▸ 02/97	133809	700000	14X1.25	19
1.4 i	7AK/DX2/DX9, 7BK/DX2/DX9, 7SKDX2 7CK/DX2/DX9	E	1360	TU3MC	M	+/-		02/93 ▸ 02/97	024246	700019	12X1.5	19
1.4 i	7AK/DX2/DX9, 7BK/DX2/DX9, 7SKDX2 7CK/DX2/DX9	E	1360	TU3MC	M			02/93 ▸ 02/97	1920C4	700014	12X1.5	19
1.4 i	7BKFX2	E	1360	TU3JP	M			07/95 ▸ 02/97	1920K9	700015	12X1.5	19
1.6 i	7AN/FZ2/FZ9, 7BN/FZ2/FZ9, 7DNFZ2 7CN/FZ2/FZ9	E	1587	TU5JP	M	+/-		02/93 ▸ 02/97	133809	700000	14X1.25	19
1.8 i	7AL/6A2/6A9/FZ2/FZ8/FZ9, 7BL/6A2 6A9/FZ2/FZ8/FZ9, 7CL/FZ2/FZ8/FZ9 7DL/6A2/FZ2/FZ8	E	1761	XU7JP	M	+		02/93 ▸ 02/97	133809	700000	14X1.25	19
1.8 i	7AL/6A2/6A9/FZ2/FZ8/FZ9, 7BL/6A2 6A9/FZ2/FZ8/FZ9, 7CL/FZ2/FZ8/FZ9 7DL/6A2/FZ2/FZ8	E	1761	XU7JP	M			02/93 ▸ 02/97	1920K9	700015	12X1.5	19
1.8 i	7AL/6A4/FZ4, 7CLFZ4, 7BL/6A4/FZ4 7DL/6A4/FZ4	E	1761	XU7JP	A	+		06/93 ▸ 02/97	133809	700000	14X1.25	19
1.8 i	7AL/6A4/FZ4, 7CLFZ4, 7BL/6A4/FZ4 7DL/6A4/FZ4	E	1761	XU7JP	A			06/93 ▸ 02/97	1920K9	700015	12X1.5	19
1.8 i	7AL/6A2/6A9/FZ2/FZ8/FZ9, 7BL/6A2 6A9/FZ2/FZ8/FZ9, 7CL/FZ2/FZ8/FZ9 7DL/6A2/FZ2/FZ8	E	1761	XU7JP	M	+		02/93 ▸ 02/97	133855	●700056	14X1.25	19
1.8 i	7AL/6A4/FZ4, 7CLFZ4, 7BL/6A4/FZ4 7DL/6A4/FZ4	E	1761	XU7JP	A	+		06/93 ▸ 02/97	133855	●700056	14X1.25	19
2.0 i,2.0 i 16V	7AR/6D2/FT2/FV2/FX2/FX8 FY2, 7BR/FX2/FX8, 7CR/6D2 FS2/FT2/FV2/FX2/FX8/FY2 7DR/6D2/FX2	E	1998	XU10J2, XU10J4R, XU10J2C XU10J4, XU10J4RS	M	+		06/93 ▸ 02/97	133809	700000	14X1.25	19
2.0 i,2.0 i 16V	7AR/6D2/FT2/FV2/FX2/FX8 FY2, 7BR/FX2/FX8, 7CR/6D2 FS2/FT2/FV2/FX2/FX8/FY2 7DR/6D2/FX2	E	1998	XU10J4R, XU10J2, XU10J4 XU10J2C, XU10J4RS	M			06/93 ▸ 02/97	1920K9	700015	12X1.5	19
2.0 i	7BRFX4, 7CRFX4, 7DRFX4, 7AR/FX4	E	1998	XU10J2, XU10J2C	A	+		09/93 ▸ 02/97	133809	700000	14X1.25	19
2.0 i	7BRFX4, 7CRFX4, 7DRFX4, 7AR/FX4	E	1998	XU10J2, XU10J2C	A			09/93 ▸ 02/97	1920K9	700015	12X1.5	19

• **New** Nouveau **Nuevo** Novo **Nuovo** Nieuw **Neu** **Yeni** Новый Nou

			CC		AC			OE	Valeo	COD.	mm	
PEUGEOT (.../...)												
306 (93>97) (.../...)												
2.0 i,2.0 i 16V	*7AR/6D2/FT2/FV2/FX2/FX8 FY2, 7BR/FX2/FX8, 7CR/6D2 FS2/FT2/FV2/FX2/FX8/FY2 7DR/6D2/FX2*	E	1998	XU10J2,XU10J2C,XU10J4,XU10J4R XU10J4RS	M	+		06/93 ▸ 02/97	133855	●700056	14X1.25	19
2.0 i	*7BRFX4, 7CRFX4, 7DRFX4, 7AR/FX4*	E	1998	XU10J2,XU10J2C	A	+		09/93 ▸ 02/97	133855	●700056	14X1.25	19
1.8 D	*7CA9A2, 7SA9A2, 7AA/9A2*	D	1769	XUD7	M	+/-		06/93 ▸ 02/97	133878	700017	14X1.25	19
1.8 D	*7CA9A2, 7SA9A2, 7AA/9A2*	D	1769	XUD7	M	+		06/93 ▸ 02/97	133809	700000	14X1.25	19
1.8 D	*7CA9A2, 7SA9A2, 7AA/9A2*	D	1769	XUD7	M	+		06/93 ▸ 02/97	133855	●700056	14X1.25	19
1.9 D,1.9 TD	*7AD/8A2/9B2/HY2/JY2/JZ2 7BD/8A2/9B2/HY2/JY2, 7CD 8A2/9B2/HY2/JY2/JZ2, 7SD 9B2/JY2/JZ2*	D	1905	XUD9,XUD9A,XUD9TE	M	+		06/93 ▸ 02/97	133855	●700056	14X1.25	19
1.9 D	*7BD9B2, 7AD/9B2/JZ2, 7CD/9B2/JZ2 7SD/9B2/JZ2*	D	1905	XUD9, XUD9A	M	+/-		06/93 ▸ 02/97	133878	700017	14X1.25	19
1.9 D,1.9 TD	*7AD/8A2/9B2/HY2/JY2/JZ2 7BD/8A2/9B2/HY2/JY2, 7CD 8A2/9B2/HY2/JY2/JZ2, 7SD 9B2/JY2/JZ2*	D	1905	XUD9A, XUD9, XUD9TE	M	+		06/93 ▸ 02/97	133809	700000	14X1.25	19
306 (97>2002)												
1.4 i,1.4 i GPL	*7AK/FXE/FXT/FXW, 7BK/FXE FXT/FXW, 7CK/FXE/FXW 7SKFXE, 7EK/FXE/FXT/FXW*	E	1360	TU3JP	M			03/97 ▸ 03/02	1920K9	700015	12X1.5	19
1.4 i	*7BKFWF, 7CKFWF, 7EKFWF, 7AK/FWF*	E	1360	TU3JP	M			05/00 ▸ 03/02	1338A6	●700054	12X1.5	21
1.6 i ▸ 7820	*7AN/FZE/FZW, 7CNFZE, 7DNFZE, 7BN FZ8/FZE/FZW, 7EN/FZE/FZW*	E	1587	TU5JP	M	+/-		03/97 ▸ 04/98	024246	700019	12X1.5	19
1.6 i 7821 ▸ 7874	*7AN/FZE/FZW, 7CNFZE, 7DNFZE, 7BN FTF/FZ8/FZE/FZW, 7EN/FZE/FZW*	E	1587	TU5JP	M			04/98 ▸ 02/02	1920K9	700015	12X1.5	19
1.6 i	*7BNFTF, 7DNFTF, 7ENFTF, 7AN/FTF*	E	1587	TU5JP	M			09/00 ▸ 09/02	1338A6	●700054	12X1.5	21
1.6 i	*7BNFTR, 7DNFTR, 7ENFTR, 7AN/FTR*	E	1587	TU5JP	A			01/00 ▸ 09/02	1338A6	●700054	12X1.5	21
1.6 i	*7BNFTR, 7DNFTR, 7ENFTR, 7AN/FTR*	E	1587	TU5JP	A			01/00 ▸ 09/02	133855	●700056	14X1.25	19
1.8 i,1.8 i 16V 1.8 i GPL 16V	*7AL/6A2/FYE/FYF/FYT/FYW 7BL/6A2/FYE/FYF/FYT/FYW FZW, 7CL/6A2/FYE/FYF, 7DL 6A2/FYE/FYT, 7EL/6A2/FYE FYF/FYT/FYW*	E	1761	XU7JP4, XU7JP	M	+		03/97 ▸ 09/02	133809	700000	14X1.25	19
1.8 i,1.8 i 16V 1.8 i GPL 16V	*7AL/6A2/FYE/FYF/FYT/FYW 7BL/6A2/FYE/FYF/FYT/FYW FZW, 7CL/6A2/FYE/FYF, 7DL 6A2/FYE/FYT, 7EL/6A2/FYE FYF/FYT/FYW*	E	1761	XU7JP4, XU7JP	M			03/97 ▸ 09/02	1920K9	700015	12X1.5	19
1.8 i	*7AL/6A4/FZP, 7CLFZP, 7DLFZP, 7BL 6A4/FZ4/FZP, 7EL/6A4/FZP*	E	1761	XU7JP	A	+		03/97 ▸ 09/02	133809	700000	14X1.25	19
1.8 i	*7AL/6A4/FZP, 7CLFZP, 7DLFZP, 7BL 6A4/FZ4/FZP, 7EL/6A4/FZP*	E	1761	XU7JP	A			03/97 ▸ 09/02	1920K9	700015	12X1.5	19
1.8 i,1.8 i 16V 1.8 i GPL 16V	*7AL/6A2/FYE/FYF/FYT/FYW 7BL/6A2/FYE/FYF/FYT/FYW FZW, 7CL/6A2/FYE/FYF, 7DL 6A2/FYE/FYT, 7EL/6A2/FYE FYF/FYT/FYW*	E	1761	XU7JP,XU7JP4	M			03/97 ▸ 09/02	133855	●700056	14X1.25	19
1.8 i	*7AL/6A4/FZP, 7CLFZP, 7DLFZP, 7BL 6A4/FZ4/FZP, 7EL/6A4/FZP*	E	1761	XU7JP	A			03/97 ▸ 09/02	133855	●700056	14X1.25	19
2.0 i 16V	*7BRFVE, 7AR/FVE, 7CR/6E2 FSH/FVE, 7ERFVE, 7DR/6E2 FVE*	E	1998	XU10J4R, XU10J4RS	M	+		03/97 ▸ 09/02	133809	700000	14X1.25	19
2.0 i 16V	*7BRFVE, 7AR/FVE, 7CR/6E2 FSH/FVE, 7ERFVE, 7DR/6E2 FVE*	E	1998	XU10J4R, XU10J4RS	M			03/97 ▸ 09/02	1920K9	700015	12X1.5	19
2.0 i 16V	*7AR/FVP, 7CRFVP, 7BR/FVP FVW, 7DR/FVP/FVW, 7ER/FVP FVW*	E	1998	XU10J4R	A	+		03/97 ▸ 09/02	133809	700000	14X1.25	19

• **New** Nouveau **Nuevo** Novo **Nuovo** Nieuw **Neu** **Yeni** Новый Nou

Valeo

Water temperature sensor
Sonde à thermistance
Sensor de temperatura de água
Sensor de temperatura de água
Sensore temperatura acqua
Watertemperatuursensor
Wassertemperaturfühler

Czujnik temperatury wody
Snímač teploty vody
Comutator de temperatură
Su sicklik sensörü
датчик температуры воды

			Type Ctr.		cc		AC			OE	Valeo	COD.	mm
PEUGEOT (.../...)													
306 (97>2002) (.../...)													
2.0 i 16V	*7AR/FVP, 7CRFVP, 7BR/FVP FVW, 7DR/FVP/FVW, 7ER/FVP FVW*	E		1998	XU10J4R	A			03/97 ▸ 09/02	1920K9	**700015**	12X1.5	19
2.0 i 16V	*7BRFVE, 7AR/FVE, 7CR/6E2 FVE, 7ERFVE, 7DR/6E2/FVE*	E		1998	XU10J4R	M			03/97 ▸ 09/02	133855	●**700056**	14X1.25	19
2.0 i 16V	*7AR/FVP, 7CRFVP, 7BR/FVP FVW, 7DR/FVP/FVW, 7ER/FVP FVW*	E		1998	XU10J4R	A			03/97 ▸ 09/02	133855	●**700056**	14X1.25	19
1.8 D	*7CA9AT, 7SA9AE, 7AA/9AT*	D		1769	XUD7	M	+		03/97 ▸ 02/02	133809	**700000**	14X1.25	19
1.8 D	*7CA9AT, 7SA9AE, 7AA/9AT*	D		1769	XUD7	M	+		03/97 ▸ 02/02	133855	●**700056**	14X1.25	19
1.9 D	*7BWJYF, 7CWJYF, 7EWJYF, 7SWJYF, 7AW JYF*	D		1868	DW8B	M	+/-		05/00 ▸ 03/02	1338A6	●**700054**	12X1.5	21
1.9 D	*7BD9BD, 7ED9BD, 7AD/9BD*	D		1905	XUD9A	M	+/-		03/97 ▸ 03/02	133878	**700017**	14X1.25	19
1.9 D,1.9 SD,1.9 TD	*7AD/8AD/9BD/HVE/HYE/JYE JYT, 7BD/8AD/9BD/HVE/HYE JYE/JYT, 7CD/HVE/HYE/JYE 7ED/9BD/HVE/HYE/JYE/JYT 7SD/JYE/JYT*	D		1905	XUD9A, XUD9BSD, XUD9TE	M	+		03/97 ▸ 03/02	133809	**700000**	14X1.25	19
1.9 D,1.9 SD,1.9 TD	*7AD/8AD/9BD/HVE/HYE/JYE JYT, 7BD/8AD/9BD/HVE/HYE JYE/JYT, 7CD/HVE/HYE/JYE 7ED/9BD/HVE/HYE/JYE/JYT 7SD/JYE/JYT*	D		1905	XUD9A,XUD9BSD,XUD9TE	M	+		03/97 ▸ 03/02	133855	●**700056**	14X1.25	19
2.0 HDi 8513 ▸	*7BRHYE, 7CRHYE, 7ERHYE 7AR/HYE*	D		1997	DW10TD	M	+/-		03/99 ▸ 02/00	1338A6	●**700054**	12X1.5	21
307(2001>2005)													
1.4 i 9456 ▸	*3CKFWB, 3EKFWB, 3AK/6DY/FWB*	E		1360	TU3JP	M	+/-		09/01 ▸ 09/02	1338A6	●**700054**	12X1.5	21
1.6 i,1.6 i 16V 9456 ▸	*3BNFU, 3AN/6A5/FUB, 3CN 6A5/FUB, 3EN/FUB/FUC, 3HN FUB/FUC*	E		1587	TU5JP4	M	+/-		03/01 ▸ 06/05	1338A6	●**700054**	12X1.5	21
1.6 i 16V 9456 ▸	*3CNFUE, 3ENFUE, 3AN/FUE 3HN/FUE/FUN*	E		1587	TU5JP4	A	+/-		03/01 ▸ 09/02	1338A6	●**700054**	12X1.5	21
2.0 i 16V	*3AR/FJC/FNB/FNB, 3BR/FKC FNC, 3CR/FNB/FNB/FNC, 3ER FJC/FNB/FNC, 3HR/FJC/FNB FNC*	E		1997	EW10A,EW10J4,EW10J4S	M	+/-		03/01 ▸ 06/05	1338C1	●**700055**	20	
2.0 i 16V	*3BRFNF, 3AR/FJF/FNE, 3CR FNE/FNF, 3ER/FJF/FNE/FNF 3HR/FJF/FNE/FNF*	E		1997	EW10A,EW10J4	A	+/-		03/01 ▸ 06/05	1338C1	●**700055**	20	
1.4 HDi	*3A8/HZB, 3E8HZB, 3C8/HZB HZM*	D		1398	DV4TD	M	+/-		02/02 ▸ 06/05	1338C1	●**700055**	20	
1.6 HDi,1.6 HDi 16V	*3A9/HXC/HYB/HZB, 3C9/HYB HZB, 3E9/HYB/HZB, 3H9/HYB HZB*	D		1560	DV6ATED4,DV6TED4	M	+/-		07/04 ▸ 06/05	1338C1	●**700055**	20	
2.0 HDi,2.0 HDi 16V	*3AR/HRH/HSB/HYB/HYM, 3CR HRH/HSB/HYB/HYM, 3ER/HRH HSB/HYB, 3HR/HRH/HSB/HYB*	D		1997	DW10ATED,DW10BTED4,DW10TD	M	+/-		03/01 ▸ 06/05	1338C1	●**700055**	20	
307 (2005>)													
2.0 i 16V	*3BRFJC, 3CRFJC, 3ERFJC 3HRFJC, 3AR/FJC*	E		1997	EW10A	M	+/-		06/05 ▸	1338C1	●**700055**	20	
2.0 i 16V	*3BRFJF, 3ERFJF, 3HRFJF 3AR/FJF*	E		1997	EW10A	A	+/-		06/05 ▸	1338C1	●**700055**	20	
1.6 HDi 16V	*3A9/HV/HV//HXC/HYB/HZB HZC, 3C9/HV/HXC/HYB/HZB HZC, 3E9/HV/HXC/HYB/HZB HZC, 3G9/HXC/HYB, 3H9/HV HXC/HYB/HZB*	D		1560	DV6ATED4,DV6TED4	M	+/-		06/05 ▸	1338C1	●**700055**	20	
2.0 HDi,2.0 HDi 16V	*3BRHRH, 3AR/HRH/HY, 3CR HRH/HY, 3ER/HRH/HY, 3HR HRH/HY*	D		1997	DW10BTED4,DW10TD	M	+/-		06/05 ▸	1338C1	●**700055**	20	

• **New** Nouveau **Nuevo** Novo **Nuovo** Nieuw **Neu** **Yeni** Новый Nou

			CC		AC			OE	Valeo	COD.	mm	
PEUGEOT (.../...)												
307 (2005>) (.../...)												
2.0 HDi 16V	*3CRHRJ, 3HRHRJ, 3AR/HRJ*	D	1997	DW10BTED4	A	+/-		12/06 ▸	1338C1	●700055	20	
308												
1.6 HDi 16V	*4A9HXC, 4C9HXC*	D	1560	DV6ATED4	M	+/-		09/07 ▸	1338C1	●700055	20	
1.6 HDi 16V	*4A9/HVC/HXC/HZC/HZH, 4C9 HVC/HZC/HZH, 4E9/HXC/HZH 4H9/HXC/HZH*	D	1560	DV6ATED4,DV6TED4,DV6TED4B	M			09/07 ▸	1338C1	●700055	20	
2.0 HDi 16V	*4ARHRH, 4CRHRH*	D	1997	DW10BTED4	M	+/-		09/07 ▸	1338C1	●700055	20	
2.0 HDi 16V	*4HRHRH*	D	1997	DW10BTED4	M			05/08 ▸	1338C1	●700055	20	
2.0 HDi 16V	*4ARHRJ, 4CRHRJ*	D	1997	DW10BTED4	A	+/-		09/07 ▸	1338C1	●700055	20	
2.0 HDi 16V	*4HRHRJ*	D	1997	DW10BTED4	A			05/08 ▸	1338C1	●700055	20	
405 (92>96)												
1.6 i	*4EBFZ2, 4SBFZ2*	E	1580	XU5JP	M	+/-		07/92 ▸ 10/96	133855	●700056	14X1.25	19
1.6 i	*4BBFZ2*	E	1580	XU5JP	M			07/92 ▸ 10/95	133855	●700056	14X1.25	19
1.6 i	*4BBFZ4, 4EBFZ4*	E	1580	XU5JP	A	+/-		07/92 ▸ 10/96	133855	●700056	14X1.25	19
1.8 i	*4BL/6A2/FZ2, 4EL/6A2/FZ2*	E	1761	XU7JP,XU7JPPR	M	+/-		07/92 ▸ 10/96	133855	●700056	14X1.25	19
1.8 i	*4BLFZ4, 4ELFZ4*	E	1761	XU7JP	A	+/-		07/92 ▸ 10/96	133855	●700056	14X1.25	19
2.0 i,2.0 i Turbo 16S	*4BR/FX2/GZ7, 4ER/6D2/FX2 FX7*	E	1998	XU10J2,XU10J2C,XU10J4TE	M	+/-		07/92 ▸ 10/96	133855	●700056	14X1.25	19
2.0 i	*4BRFY2*	E	1998	XU10J4	M	+		07/92 ▸ 10/95	133855	●700056	14X1.25	19
2.0 i	*4BRFX7*	E	1998	XU10J2	M			07/92 ▸ 10/95	133855	●700056	14X1.25	19
2.0 i	*4BR/FX4, 4ER/6D4/FX4*	E	1998	XU10J2,XU10J2C	A	+/-		07/92 ▸ 10/96	133855	●700056	14X1.25	19
406 (95>99)												
1.6 i	*8BB/FZ2/FZD/FZE*	E	1580	XU5JP	M	+		10/95 ▸ 03/99	133809	700000	14X1.25	19
1.8 i,1.8 i 16V 1.8 i GPL 16V	*8CLFYE, 8BL/6A2/FXE/FY2 FY8/FYD/FYE/FYS/FYT/FYW 8EL/6A2/FXE/FYE/FYT/FYW 8FL/FXE/FYE/FYT*	E	1761	XU7JP4, XU7JB, XU7JP	M	+		10/95 ▸ 03/99	133809	700000	14X1.25	19
1.8 i 16V	*8ELFYP, 8FLFYP, 8BL/FYP*	E	1761	XU7JP4	A	+		07/96 ▸ 03/99	133809	700000	14X1.25	19
2.0 i 16V	*8CR/FNR/FR6/FRR*	E	1997	EW10J4	A	+		04/99 ▸ 04/03	133809	700000	14X1.25	19
2.0 i 16V	*8BR/6E2/FV2/FVD/FVE/FVW 8CR/FV2/FVE, 8FRFVE, 8ER 6E2/FVE/FVW*	E	1998	XU10J4R	M	+		10/95 ▸ 03/99	133809	700000	14X1.25	19
2.0 i Turbo	*8ERGXE, 8BR/GX2/GXE*	E	1998	XU10J2TE	M	+		07/96 ▸ 03/99	133834	700008	14X1.25	19
2.0 i 16V	*8BR/6E4/FV4/FVN/FVP, 8CR FV8/FVP/FVT, 8FRFVP, 8ER 6E2/FVP*	E	1998	XU10J4R	A	+		10/95 ▸ 03/99	133809	700000	14X1.25	19
1.9 TD	*8BD/8B2/8BD/HVF/HWE/HX2 HXE, 8ED/8BD/HWE/HX2/HXE 8FD/HWE/HXE*	D	1905	XUD9TE, XUD9BTF, XUD9BSD XUD9SD	M	+		11/95 ▸ 03/99	133809	700000	14X1.25	19
1.9 TD	*8EDHXP, 8FDHXP, 8BD/HXP*	D	1905	XUD9BTF	A	+		03/97 ▸ 03/99	133809	700000	14X1.25	19
2.1 TD	*8EP8CE, 8FP8CE, 8BP/8C2 8CD/8CE*	D	2088	XUD11BTE	M	+		11/95 ▸ 03/99	133809	700000	14X1.25	19
406 (99>)												
1.6 i	*8BBFZE*	E	1580	XU5JP	M	+/-		04/99 ▸ 03/04	1920K9	700015	12X1.5	19
1.6 i	*8BBFZE*	E	1580	XU5JP	M	+		04/99 ▸ 03/04	133809	700000	14X1.25	19
1.8 i,1.8 i 16V 1.8 i GPL 16V	*8BL/6A2/FXE/FYE/FYF/FYT FYW, 8EL/FXE/FYE/FYT, 8FL FXE/FYE*	E	1761	XU7JP4, XU7JP, XU7JB	M	+/-		04/99 ▸ 04/04	1920K9	700015	12X1.5	19
1.8 i,1.8 i 16V 1.8 i GPL 16V	*8BL/6A2/FXE/FYE/FYF/FYT FYW, 8EL/FXE/FYE/FYT, 8FL FXE/FYE*	E	1761	XU7JP4, XU7JB, XU7JP	M	+		04/99 ▸ 04/04	133809	700000	14X1.25	19
1.8 i 16V	*8BL/FYP, 8FLFYP, 8EL/FYP FYR*	E	1761	XU7JP4	A	+/-		04/99 ▸ 04/04	1920K9	700015	12X1.5	19
1.8 i 16V	*8BL/FYP, 8FLFYP, 8EL/FYP FYR*	E	1761	XU7JP4	A	+		04/99 ▸ 04/04	133809	700000	14X1.25	19
2.0 i 16V	*8ERFV2, 8BR/FV2/FVW*	E	1998	XU10J4R	M	+/-		04/99 ▸ 04/04	1920K9	700015	12X1.5	19
2.0 i 16V	*8ERFV2, 8BR/FV2/FVW*	E	1998	XU10J4R	M	+		04/99 ▸ 04/04	133809	700000	14X1.25	19
2.0 i 16V	*8ERFV4, 8BR/FV4/FVT*	E	1998	XU10J4R	A	+/-		04/99 ▸ 04/04	1920K9	700015	12X1.5	19

• **New** Nouveau **Nuevo** Novo **Nuovo** Nieuw **Neu** **Yeni** Новый Nou

Valeo

Water temperature sensor
Sonde à thermistance
Sensor de temperatura de água
Sensor de temperatura de água
Sensore temperatura acqua
Watertemperatuursensor
Wassertemperaturfühler

Czujnik temperatury wody
Snímač teploty vody
Comutator de temperatură
Su sicklik sensörü
датчик температуры воды

Type Ctr.		cc		AC		2 3	OE	Valeo	COD.	mm
PEUGEOT (.../...)										
406 (99>) (.../...)										
2.0 i 16V	*8ERFV4, 8BR/FV4/FVT*	E	1998	XU10J4R	A	+		04/99 ▸ 04/04	133809	**700000**	14X1.25	19
407										
1.8 i 16V	*6D6FYC, 6E6FYC*	E	1749	EW7A	M	+		01/06 ▸	1338C1	●**700055**	20	
2.0 i 16V	*6DRFJC, 6ERFJC*	E	1997	EW10A	M	+		01/06 ▸	1338C1	●**700055**	20	
2.0 i 16V	*6DRFJF, 6ERFJF*	E	1997	EW10A	A	+		01/06 ▸	1338C1	●**700055**	20	
2.2 i 16V	*6D3/FYH/FZH, 6J3FYH, 6E3 FYH/FZH*	E	2230	EW12J4	M	+		04/04 ▸	1338C1	●**700055**	20	
2.2 i 16V	*6D3/FYF/FZF, 6E3/FYF/FZF*	E	2230	EW12J4	A	+		04/04 ▸	1338C1	●**700055**	20	
1.6 HDi 16V	*6D9/HYB/HYC/HZC, 6E9/HYB HYC/HZC*	D	1560	DV6TED4	M	+		04/04 ▸	1338C1	●**700055**	20	
2.0 HDi 16V	*6ERHRH, 6JRHRH, 6DR/HRG HRH*	D	1997	DW10BTED4	M	+		04/04 ▸	1338C1	●**700055**	20	
2.0 HDi 16V	*6DR/HRE/HRJ, 6ER/HRE/HRJ*	D	1997	DW10BTED4	A	+		04/04 ▸	1338C1	●**700055**	20	
2.2 HDi 16V	*6D4/HPH/HTH, 6E4/HPH/HTH*	D	2179	DW12BTED4	M	+		06/06 ▸	1338C1	●**700055**	20	
4007										
2.2 HDi 16V	*VV4HNH*	D	2179	DW12MTED4	M	+		07/07 ▸	1338C1	●**700055**	20	
605 (94>99)										
2.0,2.0 i,2.0 i 16V	*6BR/5A2/6A8/6E2/FV2/FV9 FVE*	E	1998	XU102C TR,XU10J2,XU10J4R	M	+/-		07/94 ▸ 05/99	133855	●**700056**	14X1.25	19
2.0 i 16V	*6BR/6E4/FV4/FVP*	E	1998	XU10J4R	A	+/-		07/94 ▸ 05/99	133855	●**700056**	14X1.25	19
2.0 i	*6BR6A4*	E	1998	XU10J2	A	+		07/94 ▸ 05/99	133855	●**700056**	14X1.25	19
3.0 i V6,3.0 i V6 24V	*6BU/FZ2/KZ2*	E	2963	ZPJ,ZPJ4	M	+		07/94 ▸ 06/97	133855	●**700056**	14X1.25	19
3.0 i V6	*6BUFZ4*	E	2963	ZPJ	A	+		07/94 ▸ 06/97	133855	●**700056**	14X1.25	19
2.1 TD Turbo	*6BP/8B2/8C2/8CE*	D	2088	XUD11ATE,XUD11BTE	M	+/-		07/94 ▸ 05/99	133855	●**700056**	14X1.25	19
2.1 TD Turbo	*6BP/8B2/HZ2*	D	2088	XUD11ATE	M	+		07/94 ▸ 09/96	133855	●**700056**	14X1.25	19
2.1 TD Turbo	*6BP/8B4/8CP*	D	2088	XUD11ATE,XUD11BTE	A	+/-		07/94 ▸ 05/99	133855	●**700056**	14X1.25	19
2.1 TD Turbo	*6BP8B4*	D	2088	XUD11ATE	A	+		07/94 ▸ 09/96	133855	●**700056**	14X1.25	19
2.5 TD	*6BT/HY2/HYE*	D	2446	DK5ATE	M	+/-		07/94 ▸ 05/99	133855	●**700056**	14X1.25	19
607 (2000>2004)										
2.0 HDi	*9DR/HSB/HZB*	D	1997	DW10ATED	M	+/-		05/00 ▸ 09/04	1338C1	●**700055**	20	
2.2 HDi 16V	*9D4/HXB/HXG*	D	2179	DW12TED4	M	+/-		05/00 ▸ 09/04	1338C1	●**700055**	20	
2.2 HDi 16V	*9D4HXE*	D	2179	DW12TED4	A	+/-		09/00 ▸ 09/04	1338C1	●**700055**	20	
607 (2004>)										
2.2 i 16V	*9U3FZC*	E	2230	EW12J4	M	+/-		10/04 ▸	1338C1	●**700055**	20	
2.2 i 16V	*9U3/FYH/FZF*	E	2230	EW12J4	A	+/-		10/04 ▸	1338C1	●**700055**	20	
2.0 HDi,2.0 HDi 16V	*9UR/HRH/HSB*	D	1997	DW10ATED,DW10BTED4	M	+/-		10/04 ▸	1338C1	●**700055**	20	
2.2 HDi 16V	*9U4/HTH/HXG*	D	2179	DW12BTED4,DW12TED4	M	+/-		10/04 ▸	1338C1	●**700055**	20	
2.2 HDi 16V	*9U4HXE*	D	2179	DW12TED4	A	+/-		10/04 ▸	1338C1	●**700055**	20	
806 (94>98)										
1.8 i	*221LA2*	E	1761	XU7JP	M	+/-		06/95 ▸ 09/98	1920K9	**700015**	12X1.5	19
1.8 i	*221LA2*	E	1761	XU7JP	M	+		06/95 ▸ 09/98	133809	**700000**	14X1.25	19
1.8 i	*221LA2*	E	1761	XU7JP	M			06/95 ▸ 09/98	133855	●**700056**	14X1.25	19
2.0 i	*221/RB2/RB9*	E	1998	XU10J2C	M	+		07/94 ▸ 09/98	133809	**700000**	14X1.25	19
2.0 i Turbo	*221RA2*	E	1998	XU10J2CTEL3, XU10J2CTE	M	+		07/94 ▸ 09/98	133834	**700008**	14X1.25	19
2.0 i	*221/RB2/RB9*	E	1998	XU10J2C	M			07/94 ▸ 09/98	133855	●**700056**	14X1.25	19
1.9 TD	*221/DC2/DH2*	D	1905	XUD9TEF, XUD9BTF	M	+		08/94 ▸ 09/98	133809	**700000**	14X1.25	19
2.1 TD	*221PA2*	D	2088	XUD11BTE	M	+		06/96 ▸ 09/98	133809	**700000**	14X1.25	19
806 (98>2002)										
1.8 i	*221LA2*	E	1761	XU7JP	M	+/-		10/98 ▸ 05/02	1920K9	**700015**	12X1.5	19
1.8 i	*221LA2*	E	1761	XU7JP	M	+		10/98 ▸ 05/02	133809	**700000**	14X1.25	19
1.8 i	*221LA2*	E	1761	XU7JP	M	+		10/98 ▸ 05/02	133855	●**700056**	14X1.25	19
2.0 i,2.0 i 16V	*221RB2, AFRFVB*	E	1998	XU10J2C, XU10J4R	M	+		10/98 ▸ 05/02	133809	**700000**	14X1.25	19
2.0 i Turbo CT	*221RA2*	E	1998	XU10J2CTEL3	M	+		10/98 ▸ 05/02	133834	**700008**	14X1.25	19
2.0 i 16V	*AFRFVB*	E	1998	XU10J4R	M			10/98 ▸ 05/02	133855	●**700056**	14X1.25	19
1.9 TD	*221DH2*	D	1905	XUD9BTF	M	+/-		10/98 ▸ 05/02	133878	**700017**	14X1.25	19
1.9 TD	*221DH2*	D	1905	XUD9BTF	M	+		10/98 ▸ 05/02	133809	**700000**	14X1.25	19

• **New** Nouveau **Nuevo** Novo **Nuovo** Nieuw **Neu** **Yeni** Новый Nou

			CC		AC			OE	Valeo	COD.	mm	
PEUGEOT (.../...)												
806 (98>2002) (.../...)												
2.1 TD	*221PA2*	D	2088	XUD11BTE	M	+/-		10/98 ▸ 05/02	133878	**700017**	14X1.25	19
2.1 TD	*221PA2*	D	2088	XUD11BTE	M	+		10/98 ▸ 05/02	133809	**700000**	14X1.25	19
2.1 TD	*221PA2*	D	2088	XUD11BTE	M			10/98 ▸ 05/02	133855	**●700056**	14X1.25	19
807												
2.0 HDi 16V	*EAR/HTB, EBR/HKH/HRH/HTB*	D	1997	DW10ATED4,DW10BTED4,DW10UTED4	M	+/-		06/02 ▸	1338C1	**●700055**	20	
2.0 HDi 16V	*EAR/HME, EBR/HME/HWB*	D	1997	DW10ATED4	A	+/-		03/03 ▸ 10/06	1338C1	**●700055**	20	
2.2 HDi 16V	*EA4/HWB/HWG, EB4/HTH/HWB HWG*	D	2179	DW12BTED4,DW12TED4	M	+/-		06/02 ▸	1338C1	**●700055**	20	
PEUGEOT												
Bipper												
1.4 HDi	*AA8HSC*	D	1398	DV4TED	M	+/-		12/07 ▸	1338C1	**●700055**	20	
Boxer (94>2001)												
2.0,2.0 i	*231/A22/A24/A34/B12/B22 B24/C22/C24/G22/H22/V22 V24, 232/B22/B24/G22/H22 J12/J22/K22/L22/N22/V24 233/B22/G22/H22/J22/K22 L22*	E	1998	XU102CU,XU10J2U	M			02/94 ▸ 12/01	133855	**●700056**	14X1.25	19
1.9 D	*231/A62/C62*	D	1905	XUD9A, XUD9AU	M	+/-		02/94 ▸ 08/98	133878	**700017**	14X1.25	19
1.9 D,1.9 TD	*231/A32/A62/A72/A82/B72 B82/C32/C62/C72/C82/N82 232/B72/B82*	D	1905	XUD9TEF, XUD9A, XUD9UTF XUD9AU	M	+		02/94 ▸ 12/01	133809	**700000**	14X1.25	19
2.5 D,2.5 TD	*231/A52/B02/B52/B54/B59 B92/B94/C02/G52/H52/J52 V52/V94, 232/B02/B52/B54 B92/B94/G52/H52/H92/J02 J52/J54/J92/J94/K52/K54 L52/L54/L92/V52/V94, 233 B52/G52/H52/J52/J54/J92 K52/K54/L52/L54, 234/G52 K52*	D	2446	DJ5, DJ5T	M	+/-		03/94 ▸ 12/01	133878	**700017**	14X1.25	19
2.5 D,2.5 TD	*231/B59/B92/N52, 233J52 232/B52/B92/G52/J52/K52 V52*	D	2446	DJ5, DJ5T	M			02/94 ▸ 02/94	1920K9	**700015**	12X1.5	19
2.8 HDi	*231/AL2/B52/BL2/BL4/CH2 CL2/GH2/GL2/HL2/JL2/VH2 VL2, 232/BH2/BL2/BL4/GH2 GL2/GL4/HL2/HL4/JH2/JL2 JL4/KH2/KL2/KL4/LL2/LL4 VH2/VL2, 233/BL2/GH2/GL2 HL2/JH2/JL2/JL4/KH2/KL2 KL4/LL2/LL4, 234/GH2/GL2 KH2/KL2*	D	2798	8140-43S	M			09/00 ▸ 12/01	1338C7	**700028**	12X1.5	19
2.8 D,2.8 HDi	*231/AL2/B52/BL2/BL4/CH2 CL2/GH2/GL2/HL2/JL2/VH2 VL2, 232/BH2/BL2/BL4/GH2 GL2/GL4/HL2/HL4/JH2/JL2 JL4/KH2/KL2/KL4/LL2/LL4 VH2/VL2, 233/BL2/GH2/GL2 HL2/JH2/JL2/JL4/KH2/KL2 KL4/LL2/LL4, 234/GH2/GL2 KH2/KL2*	D	2798	8140-43S, 8140-63	M			06/99 ▸ 12/01	1338A5	**700021**	12X1.5	19
Boxer (2002>2006)												
2.0 i	*ZAT/MF, ZBT/MF/MP, ZCT/MF/MM*	E	1998	XU10J2U	M			01/02 ▸ 06/06	133897	**●700054**	12X1.5	21
2.8 HDi	*ZAP/MF/MP, ZBP/MD/MF/MH MP/WF/WN, ZCP/MD/MF/MH/MM WA/WC/WD/WN*	D	2798	F28TDCR	M			01/02 ▸ 06/06	1338C7	**700028**	12X1.5	19

• **New** Nouveau **Nuevo** Novo **Nuovo** Nieuw **Neu** **Yeni** Новый Nou

Valeo

Water temperature sensor
Sonde à thermistance
Sensor de temperatura de água
Sensor de temperatura de água
Sensore temperatura acqua
Watertemperatuursensor
Wassertemperaturfühler

Czujnik temperatury wody
Snímač teploty vody
Comutator de temperatură
Su sicklik sensörü
датчик температуры воды

Type Ctr.		cc		AC		2 3	OE	Valeo	COD.	mm
PEUGEOT (.../...)										
Boxer (2002>2006) (.../...)										
2.8 HDi *ZAP/AP, ZCPAF, ZBP/AF/AP*	D	2798	F28TDCR	A			01/03 ▸ 06/06	1338C7	**700028**	12X1.5	19
Boxer II (2006>)										
2.2 HDi 16V *YABMF, YAA/MF/MM/MP, YBA MD/MF/MG, YBB/MD/MF/MG/MP YCA/MD/MF/MG, YCB/MD/MF MG*	D	2229	22DT	M	+/-		07/06 ▸	1338F9	**700028**	12X1.5	19
3.0 HDi 16V *YCDMF, YBD/MD/MF*	D	2999	F30DT	M	+/-		07/06 ▸	1338F9	**700028**	12X1.5	19
Expert (95>2003)										
1.6 i *223AA2, 224AA2, 222/AA2*	E	1581	160A	M	+/-		09/95 ▸ 12/03	024246	**700019**	12X1.5	19
1.8 i *222/LA9/LB9, 224/LA9/LB9*	E	1761	XU7JP	M			07/96 ▸ 12/03	1920K9	**700015**	12X1.5	19
1.9 D,1.9 TD *222/DA2/DB2, 223/DA2/DB2 DH2, 225DA2, 226DA2, 224 DA2/DB2/DH2*	D	1905	XUD9TEF, XUD9A, XUD9BTF	M	+/-		09/95 ▸ 12/03	133878	**700017**	14X1.25	19
1.9 D,1.9 TD *222/DA2/DB2, 223/DA2/DB2 DH2, 225DA2, 226DA2, 224 DA2/DB2/DH2*	D	1905	XUD9A, XUD9TEF, XUD9BTF	M	+		09/95 ▸ 12/03	133809	**700000**	14X1.25	19
2.0 HDi 16V *BTRHWB, BZRHWB, BAR/HWB* ▸ 9268	D	1997	DW10ATED4	M	+/-		03/02 ▸ 12/03	1338C1	●**700055**	20	
2.0 HDi,2.0 HDi 16V *BCRHZB, BAR/HWB/HZB* ▸ 9267 *BERHZB, BHRHZB, BDR/HXA HXB/HZ/HZA/HZB, BTRHWB BURHZB, BWRHZB, BSR/HXA HXB/HZB, BYR/HXA/HXB/HZB BZR/HWB/HXA/HXB*	D	1997	DW10ATED,DW10ATED4,DW10BTED DW10CTED	M	+/-		09/00 ▸ 12/03	1338A6	●**700054**	12X1.5	21
Expert II (2004>2006)										
2.0 HDi *BBR/HXB/HZB, BER/HXB/HZB BURHZB, BSR/HXB/HZB, BWR HXB/HZB, BZRHXB, BYR/HXB HZB*	D	1997	DW10BTED,DW10BTED+L4	M	+/-		01/04 ▸ 12/06	1338A6	●**700054**	12X1.5	21
2.0 HDi 16V *BVRHWB, BXRHWB, BZRHWB BTR/HWB*	D	1997	DW10ATED4	M	+/-		01/04 ▸ 12/06	1338C1	●**700055**	20	
Expert II (2007>)										
1.6 HDi 16V *XC9HUC, XS9HUC, XT9HUC XU9HUC, XV9HUC, XW9HUC XA9/HUC*	D	1560	DV6UTED4	M	+/-		01/07 ▸	1338C1	●**700055**	20	
2.0 HDi 16V *XAR/HKH/HRH, XCR/HKH/HRH XSRHKH, XDR/HKH/HRH XURHKH, XVRHKH, XWRHKH XTR/HKH/HRH*	D	1997	DW10BTED4,DW10UTED4	M	+/-		01/07 ▸	1338C1	●**700055**	20	
Partner (96>2002)										
1.1 i GPL *5AHDZE, 5BHDZE*	E	1124	TU1M+	M	+/-		01/99 ▸ 11/02	133855	●**700056**	14X1.25	19
1.1 i *5AHFXF, 5BHFXF*	E	1124	TU1JP	M	+/-		01/01 ▸ 11/02	1338A6	●**700054**	12X1.5	21
1.1 i *5BHDZD, 5DHDZE, 5AH/DZA, 5FH/DZD DZE*	E	1124	TU1M+	M	+		06/96 ▸ 11/02	133855	●**700056**	14X1.25	19
1.4 i,1.4 i GPL *5BK/6C2/FXD/FXE, 5CK/FXD FXE, 5FK/6C2/FWF/FXD/FXE FXF*	E	1360	TU3JP	M	+/-		06/96 ▸ 11/02	1338A6	●**700054**	12X1.5	21
1.4,1.4 i *5BK/5A2/5AG/FXD, 5EK5AG 5CK/FXD/FXE, 5FK/5A2/5AG FXD/FXE*	E	1360	TU3.2,TU3JP	M	+		06/96 ▸ 11/02	133855	●**700056**	14X1.25	19
1.6 i 16V *5FN/FUF/FUU*	E	1587	TU5JP4	M	+/-		09/00 ▸ 11/02	1338A6	●**700054**	12X1.5	21
1.8 i *5FLFXE*	E	1761	XU7JB	M	+/-		05/97 ▸ 11/02	1920K9	**700015**	12X1.5	19
1.8 i *5FLFXE*	E	1761	XU7JB	M	+		05/97 ▸ 11/02	133809	**700000**	14X1.25	19
1.8 i *5FLFXE*	E	1761	XU7JB	M	+		05/97 ▸ 11/02	133855	●**700056**	14X1.25	19
1.8 D *5CA9AD, 5FA9AD, 5BA/9A2/9AD/9AG*	D	1769	XUD7	M	+/-		06/96 ▸ 11/02	133878	**700017**	14X1.25	19
1.8 D *5CA9AD, 5FA9AD, 5BA/9A2/9AD/9AG*	D	1769	XUD7	M	+		06/96 ▸ 11/02	133809	**700000**	14X1.25	19
1.8 D *5CA9AD, 5FA9AD, 5BA/9A2/9AD/9AG*	D	1769	XUD7	M	+		06/96 ▸ 11/02	133855	●**700056**	14X1.25	19
1.9 D *5CD9BD, 5FD9BD, 5BD/9BD*	D	1905	XUD9A	M	+/-		06/96 ▸ 11/02	133878	**700017**	14X1.25	19

• **New** Nouveau **Nuevo** Novo **Nuovo** Nieuw **Neu** **Yeni** Новый Nou

			CC		AC			OE	Valeo	COD.	mm	
PEUGEOT (.../...)												
Partner (96>2002) (.../...)												
1.9 D	*5CD9BD, 5DD9BD, 5BD/9BD/JYE, 5FD 9BD/JYE*	D	1905	XUD9A	M	+		06/96 ▸ 11/02	133809	**700000**	14X1.25	19
1.9 D	*5CD9BD, 5DD9BD, 5BD/9BD/JYE, 5FD 9BD/JYE*	D	1905	XUD9A	M	+		06/96 ▸ 11/02	133855	**•700056**	14X1.25	19
2.0 HDi 9156 ▸	*5BR/HYE/HYF, 5CR/HYE/HYF 5FR/HYE/HYF/HYU*	D	1997	DW10TD	M	+/-		12/01 ▸ 11/02	1338C1	**•700055**	20	
Partner (2002>)												
1.1 i	*GBHFXB*	E	1124	TU1JP	M			12/02 ▸ 05/08	1338A6	**•700054**	12X1.5	21
1.4 i	*GBKFWB, GJKFWB*	E	1360	TU3JP	M			12/02 ▸ 05/08	1338A6	**•700054**	12X1.5	21
1.6 HDi 16V	*GB9/HWC/HXC, GC9/HWC/HXC GJ9/HWC/HXC*	D	1560	DV6ATED4,DV6BTED4	M	+/-		01/06 ▸ 05/08	1338C1	**•700055**	20	
1.9 D	*GJW,JYB*	D	1868	DW8B	M	+/-		11/02 ▸ 05/08	1338C1	**•700055**	20	
2.0 HDi	*GCRHYB, GERHYB, GBR/HYB GJR/HY/HYK*	D	1997	DW10TD	M	+/-		11/02 ▸ 05/08	1338C1	**•700055**	20	
Partner (B9) (2008>)												
1.6 HDi 16V	*7A9/HTC/HXC, 7B9/HTC/HXC 7J9/HTC/HXC/HZC*	D	1560	DV6ATED4,DV6AUTED4,DV6BTED4 DV6BUTED4,DV6TED4	M	+/-		05/08 ▸	1338C1	**•700055**	20	
Ranch (96>2002)												
1.4 i	*5BKFXD, 5FKFXE*	E	1360	TU3JP	M	+		06/96 ▸ 05/99	133855	**•700056**	14X1.25	19
1.8 i	*5FLFXE*	E	1761	XU7JB	M	+		07/97 ▸ 11/02	133855	**•700056**	14X1.25	19
1.8 D	*5BA9AD*	D	1769	XUD7	M	+		06/96 ▸ 11/02	133855	**•700056**	14X1.25	19
1.9 D	*5CD9BD, 5FDJYE, 5BD/9BD*	D	1905	XUD9A	M	+		06/96 ▸ 11/02	133855	**•700056**	14X1.25	19
Ranch (2002>)												
2.0 HDi	*GBRHYB, GCRHYB*	D	1997	DW10TD	M	+/-		11/02 ▸ 05/08	1338C1	**•700055**	20	
RENAULT												
R19												
1.4 ▸ 901130	*C537, L537, B53/7*	E	1390	E6J	A	+/-		07/88 ▸ 11/90	7700786467	**•700060**	14X1.25	22
1.4,1.4 GPL,1.4 i ▸ 901130	*B53/7/A, L537, S537, C53 7/A*	E	1390	E6J,E7J	M	+/-		07/88 ▸ 01/91	7700786467	**•700060**	14X1.25	22
1.7,1.7 i ▸ 901130	*B53/3/6/B/C/E/F/M, D53C C53/3/B/C/E/F/M, L53/3/6 B/C/F*	E	1721	F2N,F3N	M	+/-		07/88 ▸ 04/92	7700786467	**•700060**	14X1.25	22
1.7,1.7 i ▸ 901130	*C53B, D53C, B53/3/B/C L53/3/B*	E	1721	F2N,F3N	A	+/-		07/88 ▸ 04/92	7700786467	**•700060**	14X1.25	22
1.8 16V,1.8 i 16V	*B53/9/D, D53D, C53/9/D L53/9/D*	E	1763	F7P	M	+/-		07/88 ▸ 10/95	7700786467	**•700060**	14X1.25	22
1.8 16V,1.8 i 16V	*B53/9/D, D53D, C53/9/D L53/9/D*	E	1763	F7P	M	+/-		07/88 ▸ 10/95	7700737571	**700016**	12X1.5	19
1.9 D	*B53/4/J, C53/4/J, L53/4/J, S53/4/J*	D	1870	F8Q	M	+/-		07/88 ▸ 04/92	7700786467	**•700060**	14X1.25	22
R21												
1.4	*K48U, L48U*	E	1397	C2L	M	+/-		06/88 ▸ 1994	7700786467	**•700060**	14X1.25	22
1.4	*B48U, L48U*	E	1397	C2L	A	+/-		06/88 ▸ 03/92	7700786467	**•700060**	14X1.25	22
2.0,2.0 i,2.0 i Turbo	*B48/3/C/R/Y, K48/3/9/C/R S, L48/3/5/C/L/Q/R/S/Y*	E	1995	J7R, J6T, J6R	M			03/86 ▸ 08/95	7700771821	**700033**	14X1.25	19
2.0,2.0 i	*B48/3/C, K48/3/9/C/S, L48 3/C/S*	E	1995	J6R, J7R, J6T	A	+/-		07/86 ▸ 08/95	7700771821	**700033**	14X1.25	19
2.0	*K489*	E	1995	J6R	M			06/86 ▸ 03/92	7700786467	**•700060**	14X1.25	22
2.0	*K489*	E	1995	J6R	A			06/88 ▸ 03/92	7700786467	**•700060**	14X1.25	22
2.2,2.2 i	*K48K, L48K, B48/K*	E	2165	J7T	M	+/-		06/86 ▸ 08/95	7700771821	**700033**	14X1.25	19
2.2,2.2 i	*K48K, L48K, B48/K*	E	2165	J7T	A	+/-		08/86 ▸ 08/95	7700771821	**700033**	14X1.25	19
2.1 D,2.1 TD	*B48/0/6/7/8/P/N/W, K48/0 6/7/8/P/N/W, L48/0/6/7/8 A/O/P/N/W, S48/0/6/V*	D	2068	J8S	M	+/-		06/86 ▸ 1994	7700771821	**700033**	14X1.25	19
R25												
2.0	*B29H*	E	1995	J7R	M			05/87 ▸ 1992	7700771821	**700033**	14X1.25	19

• **New** Nouveau **Nuevo** Novo **Nuovo** Nieuw **Neu** **Yeni** Новый Nou

Type Ctr.		cc		AC		2 3	OE	Valeo	COD.	mm
RENAULT (.../...)										
R25 (.../...)										
2.0 *B29H*	E	1995	J7R	A		06/89 ▸ 1992	7700771821	**700033**	14X1.25	19
2.2 *B29/B/E*	E	2165	J7T	M		09/83 ▸ 1992	7700771821	**700033**	14X1.25	19
2.2 *B29/B/E*	E	2165	J7T	A		09/83 ▸ 1992	7700771821	**700033**	14X1.25	19
2.1 D,2.1 TD *B29/D/6/W*	D	2068	J8S	M		06/88 ▸ 1992	7700771821	**700033**	14X1.25	19
Alpine GT D500										
2.5 V6 Turbo *D501*	E	2458	Z7U	M		09/84 ▸ 1991	7700786467	●**700060**	14X1.25	22
Alpine A610										
3.0 Turbo *D503*	E	2975	Z7X	M	+/-	03/91 ▸ 1993	7700737571	**700016**	12X1.5	19
3.0 Turbo *D503*	E	2975	Z7X	M		03/91 ▸ 1993	7700809909	**700009**	14X1.25	19
Clio (90>98)										
1.2 i *357/K/Y, 657K, 557/K/Y*	E	1149	D7F	M		03/96 ▸ 02/98	7700869343	**700016**	12X1.5	19
1.2 i *357/F/G/J/L, 557/F/G/J/L/R, B57/A/R S, C57/A/R/S, S57/A/R*	E	1171	E7F	M	+/-	09/90 ▸ 02/98	7700737571	**700016**	12X1.5	19
1.4 i *B57/B/J/T/Y, C57/B/J/T/Y*	E	1390	E7J	M	+/-	09/90 ▸ 02/98	7700737571	**700016**	12X1.5	19
1.4 i *B57/B/J/T, C57/B/J/T*	E	1390	E7J	A	+/-	09/90 ▸ 02/98	7700737571	**700016**	12X1.5	19
1.8 i *557U, B57C, 357/U/V, C57/C/H*	E	1794	F3P	M	+/-	03/96 ▸ 02/98	7700786467	●**700060**	14X1.25	22
1.8 i *557U, B57B, C57B, 357/A/U*	E	1794	F3P	A	+/-	03/96 ▸ 02/98	7700786467	●**700060**	14X1.25	22
Clio II (98>2001)										
1.9 D *CB0E, BB0/E, SB0/E/J/R*	D	1870	F8Q	M		03/98 ▸ 03/01	7700829427	●**700057**	20	
Clio II (2001>)										
1.9 D *LB02, BB0/J, SB0/E/R*	D	1870	F8Q	M	+/-	04/01 ▸	7700829427	●**700057**	20	
1.9 D *BB0/2/E/J, CB0/E/J, SB0/E/J/R*	D	1870	F8Q	M		04/01 ▸	7700829427	●**700057**	20	
Espace (84>91)										
2.0 *J116*	E	1995	J7R	M		06/87 ▸ 01/91	7700771821	**700033**	14X1.25	19
Espace II (91>96)										
2.0 i *J636*	E	1995	J7R	M		01/91 ▸ 08/96	7700771821	**700033**	14X1.25	19
2.2 i *S637, J63/7/G*	E	2165	J7T	M		01/91 ▸ 08/96	7700771821	**700033**	14X1.25	19
2.2 i *J637*	E	2165	J7T	A		01/91 ▸ 08/96	7700771821	**700033**	14X1.25	19
2.1 dT *J63/3/4/5/D/E, S63/5/D*	D	2068	J8S	M		01/91 ▸ 08/96	7700771821	**700033**	14X1.25	19
Espace III (96>2000)										
2.0 i *JE0A*	E	1998	F3R	M		10/96 ▸ 06/00	7700829427	●**700057**	20	
2.0 i *JE0A*	E	1998	F3R	A		10/96 ▸ 06/00	7700829427	●**700057**	20	
3.0 i V6 *JE0D*	E	2963	Z7X	A	+/-	09/96 ▸ 06/98	7700737571	**700016**	12X1.5	19
Laguna (94>98)										
1.8 i *B56/A/B/S/Z*	E	1794	F3P	M	+/-	01/94 ▸ 06/96	7700737571	**700016**	12X1.5	19
1.8 i *B56/0/T*	E	1794	F3P	M		05/95 ▸ 04/98	7700829427	●**700057**	20	
2.0 i *B56/L/N*	E	1998	F3R	M	+/-	07/95 ▸ 04/98	7700829427	●**700057**	20	
2.0 i *B56/L/N*	E	1998	F3R	A	+/-	07/95 ▸ 04/98	7700829427	●**700057**	20	
2.0 i *B56/C/H/L/N*	E	1998	F3R	M	+/-	01/94 ▸ 04/98	7700737571	**700016**	12X1.5	19
2.0 i *B56/C/H/L/N*	E	1998	F3R	A	+/-	01/94 ▸ 04/98	7700737571	**700016**	12X1.5	19
3.0 i V6 *B56E*	E	2963	Z7X	M	+/-	01/94 ▸ 12/96	7700737571	**700016**	12X1.5	19
3.0 i V6 *B56/5/R*	E	2963	Z7X	A	+/-	01/94 ▸ 04/98	7700737571	**700016**	12X1.5	19
2.2 D,2.2 Dt *B56/2/6/9/F/P* 971209 ▸	D	2188	G8T	M	+/-	03/94 ▸ 04/98	7700869343	**700016**	12X1.5	19
Laguna (98>2000)										
1.8 i *B560*	E	1794	F3P	M	+/-	09/99 ▸ 12/00	7700737571	**700016**	12X1.5	19
1.8 i *B560*	E	1794	F3P	M	+/-	09/99 ▸ 12/00	7700829427	●**700057**	20	
2.0 i *B56L*	E	1998	F3R	M	+/-	05/98 ▸ 12/00	7700737571	**700016**	12X1.5	19
2.0 i *B56/L/U*	E	1998	F3R	A	+/-	05/98 ▸ 12/00	7700737571	**700016**	12X1.5	19
2.0 i *B56L*	E	1998	F3R	M	+/-	05/98 ▸ 12/00	7700829427	●**700057**	20	
2.0 i *B56/L/U*	E	1998	F3R	A	+/-	05/98 ▸ 12/00	7700829427	●**700057**	20	
1.9 dTi *B56J*	D	1870	F9Q	M	+/-	05/98 ▸ 12/00	7700829427	●**700057**	20	
1.9 dTi *B56J*	D	1870	F9Q	A	+/-	07/99 ▸ 12/00	7700829427	●**700057**	20	

• **New** Nouveau **Nuevo** Novo **Nuovo** Nieuw **Neu** **Yeni** Новый Nou

Type Ctr.		CC		AC			OE	Valeo	COD.	mm
RENAULT (.../...)										
Laguna (98>2000) (.../...)										
2.2 dT *B569*	D	2188	G8T	M	+/-		05/98 ▸ 12/00	7700869343	**700016**	12X1.5	19
Laguna Nevada (95>98)										
1.8 i *K56S*	E	1794	F3P	M	+/-		07/95 ▸ 04/98	7700737571	**700016**	12X1.5	19
2.2 D,2.2 dT *K56/2/6/9/F, S56/6/F*	D	2188	G8T	M	+/-		07/95 ▸ 04/98	7700869343	**700016**	12X1.5	19
971209 ▸										
Laguna Nevada (98>2000)										
1.8 i *K560*	E	1794	F3P	M	+/-		05/99 ▸ 12/00	7700737571	**700016**	12X1.5	19
2.0 i *K56L*	E	1998	F3R	M	+/-		05/98 ▸ 12/00	7700737571	**700016**	12X1.5	19
2.0 i *K56L*	E	1998	F3R	A	+/-		05/98 ▸ 12/00	7700737571	**700016**	12X1.5	19
Mégane (95>99)										
1.4 i *BA0/E/T*	E	1390	E7J	M	+/-		11/95 ▸ 02/99	7700737571	**700016**	12X1.5	19
2.0 i *DA0G, EA0G, BA0/7/G*	E	1998	F3R	M	+/-		11/95 ▸ 02/99	7700737571	**700016**	12X1.5	19
2.0 i *DA0G, EA0G, BA0/7/G*	E	1998	F3R	A	+/-		11/95 ▸ 02/99	7700737571	**700016**	12X1.5	19
2.0 i *DA0G, EA0G*	E	1998	F3R	M	+/-		11/95 ▸ 02/99	7700829427	•**700057**	20	
2.0 i,2.0 i 16V *BA0/7/G, EA0/G/H*	E	1998	F3R,F7R	M			11/95 ▸ 02/99	7700829427	•**700057**	20	
2.0 i *EA0G, BA0/7/G*	E	1998	F3R	A			11/95 ▸ 02/99	7700829427	•**700057**	20	
1.9 D,1.9 dT,1.9 dTi *BA0/8/9/A/K/N/U/Y, SA0/9 A/U/Y*	D	1870	F8Q,F9Q	M			11/95 ▸ 02/99	7700829427	•**700057**	20	
1.9 dTi *BA0N*	D	1870	F9Q	A			04/97 ▸ 02/99	7700829427	•**700057**	20	
Mégane Classic (96>99)										
1.6 e *LA1C, LA0/F/L/S*	E	1598	K7M	M	+/-		09/96 ▸ 02/99	7700737571	**700016**	12X1.5	19
1.6 e *LA0F*	E	1598	K7M	A	+/-		09/96 ▸ 02/99	7700737571	**700016**	12X1.5	19
Mégane Scénic (96>99)										
1.4 i *JA0E*	E	1390	E7J	M	+/-		10/96 ▸ 09/99	7700737571	**700016**	12X1.5	19
Safrane										
2.0 Si,2.0 i *B54/0/2/E*	E	1995	J7R	M	+/-		05/92 ▸ 09/96	7700809909	**700009**	14X1.25	19
2.0 Si,2.0 i *B54/0/2/E*	E	1995	J7R	M	+/-		05/92 ▸ 09/96	7700737571	**700016**	12X1.5	19
2.0 Si,2.0 i *B54/0/2/E*	E	1995	J7R	A	+/-		05/92 ▸ 09/96	7700809909	**700009**	14X1.25	19
2.0 Si,2.0 i *B54/0/2/E*	E	1995	J7R	A	+/-		05/92 ▸ 09/96	7700737571	**700016**	12X1.5	19
2.2 Si,2.2 i *B54/1/3*	E	2165	J7T	M	+/-		05/92 ▸ 09/96	7700809909	**700009**	14X1.25	19
2.2 Si,2.2 i *B54/1/3*	E	2165	J7T	M	+/-		05/92 ▸ 09/96	7700737571	**700016**	12X1.5	19
2.2 Si,2.2 i *B54/1/3*	E	2165	J7T	A	+/-		05/92 ▸ 09/96	7700809909	**700009**	14X1.25	19
2.2 Si,2.2 i *B54/1/3*	E	2165	J7T	A	+/-		05/92 ▸ 09/96	7700737571	**700016**	12X1.5	19
3.0 i *B54M*	E	2963	Z7X	A	+/-		09/96 ▸ 12/98	7700737571	**700016**	12X1.5	19
3.0 i V6,3.0 i V6i 3.0 i V6i Biturbo *B54/4/5*	E	2975	Z7X	M	+/-		05/92 ▸ 09/96	7700737571	**700016**	12X1.5	19
3.0 i V6 *B54/4/B/J*	E	2975	Z7X	A	+/-		05/92 ▸ 09/96	7700737571	**700016**	12X1.5	19
2.2 TD *B54G*	D	2188	G8T	M	+/-		09/96 ▸ 12/97	7700869343	**700016**	12X1.5	19
▸ 971209										
2.0 i 16V *B54L05, B54L0C*	E	1948	N7Q.7.10	M			09/96 ▸ 11/00	7439186486	•**700037**	10X1.0	19
2.0 i 16V *B54L02*	E	1948	N7Q.7.11	A			09/96 ▸ 11/00	7439186486	•**700037**	10X1.0	19
2.5 i 20V *B54F05*	E	2435	N7U.7.00	M			09/96 ▸ 11/00	7439186486	•**700037**	10X1.0	19
2.5 i 20V *B54F02*	E	2435	N7U.7.01	A			09/96 ▸ 11/00	7439186486	•**700037**	10X1.0	19
Super 5										
1.4 Turbo *C405*	E	1397	C1J	M	+/-		07/84 ▸ 08/90	7700786467	•**700060**	14X1.25	22
1.4 *B402, C402*	E	1397	C1J	M	+		07/84 ▸ 08/90	7700786467	•**700060**	14X1.25	22
1.7 *B40/8/G/K, C40/8/9/G/K*	E	1721	F2N,F3N	M	+/-		06/86 ▸ 08/90	7700786467	•**700060**	14X1.25	22
1.7 *B408, C408*	E	1721	F3N	A	+/-		06/86 ▸ 08/90	7700786467	•**700060**	14X1.25	22
Twingo I (93>98)										
1.2 i *S066, C06/6/7*	E	1149	D7F	M	+/-		07/96 ▸ 03/97	7700869343	**700016**	12X1.5	19
▸ 970324										
1.2 i *S066, C06/6/7*	E	1149	D7F	A	+/-		07/96 ▸ 03/97	7700869343	**700016**	12X1.5	19
▸ 970324										
1.2 *C06/3/4, S06/3/4*	E	1239	C3G	M	+/-		03/93 ▸ 01/97	7700737571	**700016**	12X1.5	19

• **New** Nouveau **Nuevo** Novo **Nuovo** Nieuw **Neu** **Yeni** Новый Nou

Type Ctr.		cc		AC		2 3	OE	Valeo	COD.	mm
RENAULT (.../...)										
Kangoo (97>2003)										
1.9 D,1.9 DTi *FC0/D/E/U, KC0/D/E/U*	D	1870	F8Q,F9Q	M			09/97 ▸ 02/03	7700829427	●**700057**	20	
Master (94>97)										
2.2 i *RC7E, RC9E, RD9E, RF1E, RH1E, RH2E RH5E, RH9E, RJ1E, RJ2E, RJ5E, RJ9E RL7E, RL9E, R8D/E*	E	2165	J7T	M	+/-		10/94 ▸ 09/97	7700737571	**700016**	12X1.5	19
Master (97>2003)										
2.5 D *ED0/A/E, FD0/A/E, HD0/A/E, JD0/A/E UD0/A/E*	D	2499	S8U	M	+/-		09/97 ▸ 09/03	7700737571	**700016**	12X1.5	19
2.8 dTi *FD0C, HD0C, JD0B, UD0C ED0/C*	D	2800	S9W	M	+/-		01/98 ▸ 09/03	7700737571	**700016**	12X1.5	19
Trafic (80>89)										
2.0 *PCX2, PCY2, T3V3, T5X2, T7W2, TBX2 TBZ2, TE12, TE22, TE92, V2W2, V4X2 V9X2, PAY/2*	E	1995	J5R	M			07/80 ▸ 02/89	7700771821	**700033**	14X1.25	19
2.0 *T5X2, TBX2*	E	1995	J5R	A			07/80 ▸ 02/89	7700771821	**700033**	14X1.25	19
Trafic (89>94)										
2.0 ▸ 890412 *PC92, PCG2, T2B2, T552, T7B2, TB12 TB22, TB42, TB52, TB62, TB92, TE92 V312, V412, V422, V492, V5B2, PC8 2*	E	1995	J5R	M			03/89 ▸ 04/89	7700771821	**700033**	14X1.25	19
2.2 ▸ 890412 *T35A, T5BA, T7BA, TB2A, TB6A, TB9A TE1A, TE2A, TE9A, V49A, V5BA, T31 A*	E	2165	J7T	M			03/89 ▸ 04/89	7700771821	**700033**	14X1.25	19
SAAB										
9-3 (2002>)										
1.8 t Turbo 16V 2.0 t Turbo 16V *YS/3FB/3FD/3FF/3FH*	E	1998	B207R, B207E, B207L	M			09/02 ▸	15393755	**700028**	12X1.5	19
1.8 t Turbo 16V 2.0 t Turbo 16V *YS/3FB/3FD/3FF/3FH*	E	1998	B207R, B207E, B207L	A			09/02 ▸	15393755	**700028**	12X1.5	19
2.2 TiD 16V *YS/3FB/3FD*	D	2171	D223L-125	M			09/02 ▸	3439088	**700005**	1/8X27 NPTF	13
2.2 TiD 16V *YS/3FB/3FD*	D	2171	D223L-125	M			09/02 ▸	90542063	**700028**	12X1.5	19
9-5 (97>2001)										
3.0 i V6 Turbo 24V *640*	E	2962	B308E	A			01/98 ▸ 08/01	15393755	**700028**	12X1.5	19
9-5 (2001>2004)										
3.0 i V6 Turbo 24V	E	2962	B308E	A			09/01 ▸ 08/03	15393755	**700028**	12X1.5	19
2.2 TiD	D	2171	D223L	M			02/02 ▸	9543802	**700005**	1/8X27 NPTF	13
2.2 TiD	D	2171	D223L	A			02/02 ▸	9543802	**700005**	1/8X27 NPTF	13
SEAT										
Alhambra										
1.8 i Turbo 20V *7V9/3B3/5B3/9B3*	E	1781	AWC	M	+/-		06/00 ▸ 05/03	251919501D	●**700036**	20	
1.8 i Turbo 20V *7V9/3B9/5B9/9B9*	E	1781	AWC	A	+/-		06/00 ▸ 05/03	251919501D	●**700036**	20	
2.0 i *7V8/355/3S5/9S5*	E	1984	ADY	M			03/96 ▸ 05/00	6U0919501B	**700012**		20
2.0 i *7V8/3S8/9S8*	E	1984	ADY	A			03/96 ▸ 05/00	6U0919501B	**700012**		20
2.0 i *7V9/2A3/3A3/5A3*	E	1984	ATM	M	+/-		06/00 ▸ 05/03	251919501D	●**700036**	20	
2.0 i *7V9/2A8/3A8*	E	1984	ATM	A	+/-		06/00 ▸ 05/03	251919501D	●**700036**	20	
1.9 TDi *7V8/385/3X5/985/9X5*	D	1896	AHU, AFN, 1Z	M			03/96 ▸ 05/00	357919501A	**700012**		20
1.9 TDi *7V8/388/988*	D	1896	AFN	A			09/97 ▸ 05/00	357919501A	**700012**		20
1.9 TDi *7V9/2U3/3C3/3T3/3T7/3U3 5C3/5T3/5T7/9C3/9T3/9T7 9U3*	D	1896	ANU,ASZ,AUY	M	+/-		06/00 ▸ 05/03	251919501D	●**700036**	20	

• **New** Nouveau **Nuevo** Novo **Nuovo** Nieuw **Neu** **Yeni** Новый Nou

			CC		AC			OE	Valeo	COD.	mm
SEAT (.../...)											
Alhambra (.../...)											
1.9 TDi	7V9/3T7/3T9/5T9/9T7/9T9	D	1896	AUY	A	+/-		06/00 ▸ 05/03	251919501D	•700036	20	
Alhambra II (2003>)											
1.8 i Turbo 20V	7V9/3B3/5B3/9B3	E	1781	AWC	M	+/-		06/03 ▸	251919501D	•700036	20	
1.8 i Turbo 20V	7V9/3B9/5B9/9B9	E	1781	AWC	A	+/-		06/03 ▸	251919501D	•700036	20	
2.0 i	7V9/3A3/5A3	E	1984	ATM	M	+/-		06/03 ▸	251919501D	•700036	20	
2.0 i	7V9/2A8/3A8	E	1984	ATM	A	+/-		06/03 ▸	251919501D	•700036	20	
2.8 i VR6 24V	7V93D3	E	2792	AYL	M	+/-		06/03 ▸	251919501D	•700036	20	
1.9 TDi	7V9/3C3/3C7/3T3/3T7/3U3 5C3/5C7/5T3/5T7/9C3/9C7 9T3/9T7/9U3	D	1896	ANU,ASZ,AUY	M	+/-		06/03 ▸	251919501D	•700036	20	
1.9 TDi	7V9/3T9/5T9/9T9	D	1896	AUY	A	+/-		06/03 ▸	251919501D	•700036	20	
Arosa											
1.0 i	6H1/0A4/0H4/0H5/0W4	E	999	ALL, AER, AHT	M			02/97 ▸ 09/99	6U0919501B	700012		20
1.4 i	6H1/0F4/0S4	E	1390	AKV, AEX, APQ	M			02/97 ▸ 01/99	6U0919501B	700012		20
1.4 i	6H1/0F3/0S3	E	1390	AKV, AEX, APQ	A			02/97 ▸ 01/99	6U0919501B	700012		20
1.7 SDi	6H1/074/0M4/174	D	1716	AKU	M			08/97 ▸ 10/03	6U0919501B	700012		20
Cordoba (93>96)											
1.4 i	6K2/2U2/2U3/2V2/3U2/3U3/3V2	E	1390	AEX	M			09/95 ▸ 06/96	6U0919501B	700012		20
1.4 i	6K2/2U2/2U3/2V2/3U2/3U3/3V2	E	1390	AEX	M			09/95 ▸ 06/96	025906041A	700011		20
1.4 i	6K2/2J1/2J2/2P1/2P2/2R1/2R2/3J1/3J2 3P1/3P2/3R1/3R2	E	1391	ABD	M			11/93 ▸ 11/95	025906041A	700011		20
1.4 i	6K2/2J1/2J2/2P1/2P2/2R1/2R2/3J1/3J2 3P1/3P2/3R1/3R2	E	1391	ABD	M			11/93 ▸ 11/95	6U0919501B	700012		20
1.6 i	6K2/2A1/2D1/2S1/3A1/3D1	E	1595	1F	M			11/93 ▸ 06/96	025906041A	700011		20
1.6 i	6K2/2A1/2D1/2S1/3A1/3D1	E	1595	1F	M			11/93 ▸ 06/96	6U0919501B	700012		20
1.6 i	6K2/2E1/2E2/2W1/2W2/3E1/3E2/3W1/3W2 8W1/8W2	E	1598	AFT, ABU	M			09/93 ▸ 06/96	025906041A	700011		20
1.6 i	6K2/2E1/2E2/2W1/2W2/3E1/3E2/3W1/3W2 8W1/8W2	E	1598	AFT, ABU	M			09/93 ▸ 06/96	6U0919501B	700012		20
1.8 i,1.8 i 16V	6K2/2D1/2F1/2M1/2T1/3C1 3F1/3M1/6G1/8C1/8G1	E	1781	ABS, ADZ, ADL, ACC	M			09/93 ▸ 06/96	025906041A	700011		20
1.8 i,1.8 i 16V	6K2/2D1/2F1/2M1/2T1/3C1 3F1/3M1/6G1/8C1/8G1	E	1781	ADZ, ACC, ADL, ABS	M			09/93 ▸ 06/96	6U0919501B	700012		20
1.8 i 16V	6K2/6G1/8G1	E	1781	ADL	M			02/94 ▸ 06/96	026906161	700038	10X1	19
1.8 i	6K2/2C2/2F2/2M2/3C2/3F2/3M2	E	1781	ABS, ADZ	A			09/93 ▸ 06/96	025906041A	700011		20
1.8 i	6K2/2C2/2F2/2M2/3C2/3F2/3M2	E	1781	ADZ, ABS	A			09/93 ▸ 06/96	6U0919501B	700012		20
2.0 i	6K2/3H1/5H1/8H1/8L1	E	1984	2E, AGG	M			09/93 ▸ 06/96	6U0919501B	700012		20
2.0 i	6K2/3H1/5H1/8H1/8L1	E	1984	AGG, 2E	M			09/93 ▸ 06/96	025906041A	700011		20
1.9 D,1.9 SDi,1.9 TD	6K2/2N1/2X1/2X2/2Z2/3T2 3E1/3K1/3Q1/3X1/3Y2/3Z2 5E1/5K1/5Q1	D	1896	AEY, 1Y, AAZ	M			09/93 ▸ 06/96	6U0919501B	700012		20
1.9 D,1.9 SDi,1.9 TD	6K2/2N1/2X1/2X2/2Z2/3T2 3E1/3K1/3Q1/3X1/3Y2/3Z2 5E1/5K1/5Q1	D	1896	1Y, AAZ, AEY	M			09/93 ▸ 06/96	025906041A	700011		20
Cordoba (96>99)											
1.0 i	6K2/261/361	E	999	AER	M			06/97 ▸ 04/99	025906041A	700011		20
1.0 i	6K2/261/361	E	999	AER	M			06/97 ▸ 04/99	6U0919501B	700012		20
1.4 i,1.4 i 16V	6K2/271/2A3/2U2/2U3/2V2 371/3A3/3U2/3U3/3V2, 6K5 2A3/2U2/2U3/2V2/3A3/3U2 3U3/3V2	E	1390	AEX, APQ, ANX, AKV, AFH	M			07/96 ▸ 05/99	025906041A	700011		20
1.4 i,1.4 i 16V	6K2/271/2A3/2U2/2U3/2V2 371/3A3/3U2/3U3/3V2, 6K5 2A3/2U2/2U3/2V2/3A3/3U2 3U3/3V2	E	1390	AEX, APQ, AKV, AFH, ANX	M			07/96 ▸ 05/99	6U0919501B	700012		20
1.6 i	6K2/2D1/2S1/3D1/8D1	E	1595	1F	M			07/96 ▸ 04/99	025906041A	700011		20
1.6 i	6K2/2D1/2S1/3D1/8D1	E	1595	1F	M			07/96 ▸ 04/99	6U0919501B	700012		20
1.6 i	6K2/2D4/3D4, 6K5/2D4/3D4	E	1595	1F	A			05/97 ▸ 05/99	025906041A	700011		20
1.6 i	6K2/2D4/3D4, 6K5/2D4/3D4	E	1595	1F	A			05/97 ▸ 05/99	6U0919501B	700012		20

• **New** Nouveau **Nuevo** Novo **Nuovo** Nieuw **Neu** **Yeni** Новый Nou

Valeo

Water temperature sensor
Sonde à thermistance
Sensor de temperatura de água
Sensor de temperatura de água
Sensore temperatura acqua
Watertemperatuursensor
Wassertemperaturfühler

Czujnik temperatury wody
Snímač teploty vody
Comutator de temperatură
Su sicklik sensörü
датчик температуры воды

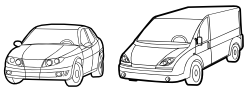 Type Ctr.		cc		AC			OE	Valeo	COD.	mm
SEAT **(.../...)**										
Cordoba (96>99) (.../...)										
1.6 i	*6K2/251/2F1/2W1/2W2/351/3F1/3W1/3W2 5W1/5W2/851/8F1/8W1/8W2, 6K5/251 2F1/2W1/351/3F1/3W1/3W2*	E	1598	AFT, AEE, ALM	M			07/96 ▸ 05/99	025906041A	**700011**		20
1.6 i	*6K2/251/2F1/2W1/2W2/351/3F1/3W1/3W2 5W1/5W2/851/8F1/8W1/8W2, 6K5/251 2F1/2W1/351/3F1/3W1/3W2*	E	1598	ALM, AFT, AEE	M			07/96 ▸ 05/99	6U0919501B	**700012**		20
1.8 i	*6K52T1, 6K2/2M1/2T1/3M1*	E	1781	ACC, ADZ	M			07/96 ▸ 05/99	025906041A	**700011**		20
1.8 i	*6K52T1, 6K2/2M1/2T1/3M1*	E	1781	ADZ, ACC	M			07/96 ▸ 05/99	6U0919501B	**700012**		20
1.8 i	*6K2/2C2/2M2/3C2/3M2*	E	1781	ADZ	A			07/96 ▸ 04/99	025906041A	**700011**		20
1.8 i	*6K2/2C2/2M2/3C2/3M2*	E	1781	ADZ	A			07/96 ▸ 04/99	6U0919501B	**700012**		20
2.0 i	*6K2/2L1/5L1/8L1*	E	1984	AGG	M			07/96 ▸ 04/99	025906041A	**700011**		20
2.0 i	*6K2/2L1/5L1/8L1*	E	1984	AGG	M			07/96 ▸ 04/99	6U0919501B	**700012**		20
2.0 i 16V	*6K2/611/811*	E	1984	ABF	M			07/96 ▸ 04/99	026906161	**700038**	10X1	19
1.9 D,1.9 SDi,1.9 TD 1.9 TDi	*6K2/2N2/2Y2/2Z2/3E1/3N2 3Y2/3Z2/581/5E1/5N2/881 8N2, 6K5/2N2/2Z2/3N2/3Z2 581*	D	1896	AHU, AAZ, 1Y, AEY, 1Z, AFN	M			07/96 ▸ 05/99	025906041A	**700011**		20
1.9 D,1.9 SDi,1.9 TD 1.9 TDi	*6K2/2N2/2Y2/2Z2/3E1/3N2 3Y2/3Z2/581/5E1/5N2/881 8N2, 6K5/2N2/2Z2/3N2/3Z2 581*	D	1896	AHU, AEY, 1Y, AAZ, AFN, 1Z	M			07/96 ▸ 05/99	6U0919501B	**700012**		20
Cordoba (99>2002)										
1.6 i	*6K2/2F1/3F1/8F1, 6K5/2F1/3F1*	E	1598	ALM	M			05/99 ▸ 08/02	6U0919501B	**700012**		20
Ibiza (93>99)										
1.0 i	*6K1/161/261/361*	E	999	AER	M			09/96 ▸ 06/99	025906041A	**700011**		20
1.0 i	*6K1/161/261/361*	E	999	AER	M			09/96 ▸ 06/99	6U0919501B	**700012**		20
1.05,1.05 i	*6K1/1B1/1B2/1B3/2B3/3B3*	E	1043	AAU	M	+/-		02/93 ▸ 06/96	025906041A	**700011**		20
1.3 i	*6K1/1C1/1C2/1L1/1L2/2C1/2C2/2L2/3C1 3C2/3L2*	E	1272	AAV, 2G	M	+/-		02/93 ▸ 07/94	025906041A	**700011**		20
1.4 i,1.4 i 16V	*6K1/1A3/1U2/1U3/1V2/271 2A3/2U2/2U3/2V2/371/3A3 3U2/3U3/3V2/571*	E	1390	APQ, AEX, AFH, ANX, AKV	M			07/95 ▸ 06/99	6U0919501B	**700012**		20
1.4 i,1.4 i 16V	*6K1/1A3/1U2/1U3/1V2/271 2A3/2U2/2U3/2V2/371/3A3 3U2/3U3/3V2/571*	E	1390	AEX, AKV, APQ, AFH, ANX	M			07/95 ▸ 06/99	025906041A	**700011**		20
1.4 i	*6K1/1J1/1J2/1P1/1P2/1R1/1R2/2J1/2J2 2P1/2P2/2R1/2R2/3J2/3P1/3P2/3R1/3R2*	E	1391	ABD	M	+/-		09/93 ▸ 06/96	6U0919501B	**700012**		20
1.4 i	*6K1/1J1/1J2/1P1/1P2/1R1/1R2/2J1/2J2 2P1/2P2/2R1/2R2/3J2/3P1/3P2/3R1/3R2*	E	1391	ABD	M			09/93 ▸ 06/96	025906041A	**700011**		20
1.6 i	*6K1/1D1/2A1/2D1/3A1/3D1*	E	1595	1F	M			05/94 ▸ 06/99	025906041A	**700011**		20
1.6 i	*6K1/1D1/2A1/2D1/3A1/3D1*	E	1595	1F	M			05/94 ▸ 06/99	6U0919501B	**700012**		20
1.6 i	*6K1/2D4/3D4*	E	1595	1F	A			05/97 ▸ 06/99	025906041A	**700011**		20
1.6 i	*6K1/2D4/3D4*	E	1595	1F	A			05/97 ▸ 06/99	6U0919501B	**700012**		20
1.6 i	*6K1/251/2E1/2E2/2F1/2W1/2W2/351/3E1 3E2/3F1/3W1/3W2/5W1/5W2*	E	1598	AFT, AEE, ABU, ALM	M			02/93 ▸ 06/99	6U0919501B	**700012**		20
1.6 i	*6K1/251/2E1/2E2/2F1/2W1/2W2/351/3E1 3E2/3F1/3W1/3W2/5W1/5W2*	E	1598	AFT, ALM, ABU, AEE	M			02/93 ▸ 06/99	025906041A	**700011**		20
1.8 i,1.8 i 16V	*6K1/2C1/2C3/2F1/2M1/2T1 3C1/3C3/3F1/3M1/6G1/7G1*	E	1781	ABS, ADL, ADZ, ACC	M	+/-		02/93 ▸ 06/99	6U0919501B	**700012**		20
1.8 i	*6K1/2C1/2C3/2F1/2M1/2T1/3C1/3C3/3F1 3M1*	E	1781	ABS, ACC, ADZ	M	+/-		02/93 ▸ 06/99	025906041A	**700011**		20
1.8 i 16V	*6K1/6G1/7G1*	E	1781	ADL	M			02/94 ▸ 06/96	026906161	**700038**	10X1	19
1.8 i	*6K1/2C2/2F2/2M2/3C2/3F2/3F3/3M2*	E	1781	ADZ, ABS	A			02/93 ▸ 06/99	6U0919501B	**700012**		20
1.8 i	*6K1/2C2/2F2/2M2/3C2/3F2/3F3/3M2*	E	1781	ADZ, ABS	A			02/93 ▸ 06/99	025906041A	**700011**		20
2.0 i	*6K1/3H1/5H1/5L1/7H1/7L1*	E	1984	AGG, 2E	M	+/-		02/93 ▸ 06/99	025906041A	**700011**		20
2.0 i	*6K1/3H1/5H1/5L1/7H1/7L1*	E	1984	AGG, 2E	M	+/-		02/93 ▸ 06/99	6U0919501B	**700012**		20
2.0 i 16V	*6K1611*	E	1984	ABF	M			07/96 ▸ 06/99	026906161	**700038**	10X1	19
1.9 SDi	*6K1/1Z2/2Z2/3Z2*	D	1896	AEY	M	+/-		09/95 ▸ 06/99	025906041A	**700011**		20

• **New** Nouveau **Nuevo** Novo **Nuovo** Nieuw **Neu** **Yeni** Новый Nou

			CC		AC			OE	Valeo	COD.	mm	
SEAT (.../...)												
Ibiza (93>99) (.../...)												
1.9 D,1.9 TD	*KK13K1, 6K1/1N1/1X1/1Y2 2N1/2X1/2Y2/3E1/3K1/3Q1 3X1/3Y2/5E1/5K1/5Q1/7E1*	D	1896	1Y, AAZ	M			02/93 ▸ 06/99	357919501	**700013**		20
Ibiza (99>2001)												
1.0 i,1.0 i 16V	*6K1/1A6/1B6/2A6/2B6/2D6 2Y6/3A6/3B6/3Y6*	E	999	ALD, AVZ, AUC, AST	M	+/-		08/99 ▸ 11/01	357919501A	**700012**		20
1.4 i,1.4 i 16V	*6K1/1D6/2D6/2E6/2R6/3D6 3E6/3R6/5R6*	E	1390	APE, AUD, AUB, AUA, AQQ	M	+/-		09/99 ▸ 11/01	357919501A	**700012**		20
1.6 i	*6K1/2F1/3F1*	E	1598	ALM	M	+/-		08/99 ▸ 11/01	6U0919501B	**700012**		20
Toledo (91>98)												
1.6 i	*1L2/2Q1/2X1/3Q1/3X1/5X1/8Q1/8X1*	E	1595	1F	M			09/96 ▸ 09/98	6U0919501B	**700012**		20
1.6 i	*1L2/2W1/311/3W1/511/5W1/8W1*	E	1598	AFT, AKS	M			09/96 ▸ 09/98	6U0919501B	**700012**		20
1.8 i	*1L2/2C1/2C2/2J1/2P1/3C1/3C2/3J1/3P1 3P2/8C1/8C2/8J1/8P1/8P2*	E	1781	RP, ADZ, ABS	M			02/91 ▸ 09/98	6U0919501B	**700012**		20
2.0 i	*1L2/2K1/3D1/3K1/3T1/5D1/5K1/5T1/8D1 8K1/8T1*	E	1984	AGG, 2E	M			02/91 ▸ 09/98	6U0919501B	**700012**		20
2.0 i	*1L2/3D2/3T2/5D2/5K2/5T2/8D2/8T2*	E	1984	2E, AGG	A			02/91 ▸ 09/98	6U0919501B	**700012**		20
1.9 D,1.9 TD,1.9 TDi	*1L2/2H1/2L1/2S1/3G1/3G2 3H1/3L1/3N1/3R1/3S1/3Z1 5R1/5Z1/8G1/8G2/8H1/8L1 8N1/8R1/8S1/8Z1*	D	1896	AFN, AAZ, 1Y, 1Z	M			02/91 ▸ 09/98	6U0919501B	**700012**		20
1.9 TDi	*1L2/3R1/5R1/8R1*	D	1896	1Z	M			04/95 ▸ 12/96	025906041A	**700011**		20
1.9 TDi	*1L2/3R1/5R1/8R1*	D	1896	1Z	M			04/95 ▸ 12/96	025906041	**700019**	12X1.5	19
SEAT												
Inca												
1.4 i,1.4 i 16V	*6K9/1A1/1D6/1E6/1U1/1V1 2A1/2D6/2E6/2U1/2U4/2V1 3A1/3D6/3E6/3U1/3U4/3V1 4A1/4D6/4E6/4U1/4V1*	E	1390	APQ, AEX, AKV, AUA, AUD	M	+/-		11/95 ▸	6U0919501B	**700012**		20
1.4 i,1.4 i 16V	*6K9/1A1/1D6/1E6/1U1/1V1 2A1/2D6/2E6/2U1/2U4/2V1 3A1/3D6/3E6/3U1/3U4/3V1 4A1/4D6/4E6/4U1/4V1*	E	1390	AKV, APQ, AUD, AEX, AUA	M	+/-		11/95 ▸ 06/03	025906041A	**700011**		20
1.6 i	*6K9/1D2/2D2/2D3/3D2/3D3/4D2*	E	1595	1F	M	+/-		11/95 ▸ 05/97	025906041A	**700011**		20
1.6 i	*6K9/1D2/2D2/2D3/3D2/3D3/4D2*	E	1595	1F	M	+/-		11/95 ▸ 05/97	6U0919501B	**700012**		20
1.6 i	*6K9/152/252/253/352/353/452*	E	1598	AEE	M	+/-		06/97 ▸ 09/00	025906041A	**700011**		20
1.6 i	*6K9/152/252/253/352/353/452*	E	1598	AEE	M			06/97 ▸	6U0919501B	**700012**		20
1.7 SDi	*6K9/121/221/321/421*	D	1714	AHB	M	+/-		07/96 ▸ 09/00	6U0919501B	**700012**		20
1.9 SDi	*6K9/1Z1/2Z1/3Z1/4Z1*	D	1896	AEY	M	+/-		11/95 ▸ 09/00	6U0919501B	**700012**		20
1.9 D	*6K9/1Y1/2Y1/3Y1/4Y1*	D	1896	1Y	M	+/-		11/95 ▸ 06/03	357919501	**700013**		20
SKODA												
Favorit												
1.3	*CEE300*	E	1289	781135B	M			10/90 ▸ 12/92	6U0919501	**700019**	12X1.5	19
Felicia (94>2001)												
1.6 i	*EGF615*	E	1598	16MPI	M			07/95 ▸ 12/97	6U0919501	**700019**	12X1.5	19
1.9 D	*6U1/3H4/4H4, 6U61H4, 6U71H4, 6U5 3H4/4H4, EHH/613/614/673/679*	D	1896	AEF	M	+/-		10/95 ▸ 12/97	357919501	**700013**		20
VAUXHALL												
Astra III (91>98)												
1.4,1.4 i,1.4 i 16V		E	1389	C14NV, X14NZ, X14XE, C14SE	M			09/91 ▸ 03/01	3439088	**700005**	1/8X27 NPTF	13
1.4 i,1.4 i 16V		E	1389	X14NZ, C14SE, X14XE	M			05/93 ▸ 03/01	90510183	**700019**	12X1.5	19

• **New** Nouveau **Nuevo** Novo **Nuovo** Nieuw **Neu** **Yeni** Новый Nou

Valeo

Water temperature sensor
Sonde à thermistance
Sensor de temperatura de água
Sensor de temperatura de água
Sensore temperatura acqua
Watertemperatuursensor
Wassertemperaturfühler

Czujnik temperatury wody
Snímač teploty vody
Comutator de temperatură
Su sicklik sensörü
датчик температуры воды

Type Ctr.		cc		AC		2 3	OE	Valeo	COD.	mm
VAUXHALL (.../...)										
Astra III (91>98) (.../...)										
1.6 i,1.6 i 16V	E	1598	X16XEL, X16SZR, X16SZ, 16LZ2	M			10/91 ▸ 03/98	90510850	**700005**	1/8X27 NPTF 13
1.6 i,1.6 i 16V	E	1598	X16XEL, X16SZ, X16SZR	M			08/94 ▸ 03/01	90510183	**700019**	12X1.5 19
1.8 i 16V	E	1799	C18XE, X18XE	M	+/-		06/93 ▸ 07/94	90411977	**700021**	12X1.5 19
1.8 i 16V	E	1799	C18XEL, X18XE	M			08/94 ▸ 03/01	3439088	**700005**	1/8X27 NPTF 13
2.0 i,2.0 i 16V	E	1998	C20NE, C20XE, X20XEV	M	+/-		09/91 ▸ 03/98	90510850	**700005**	1/8X27 NPTF 13
2.0 i 16V	E	1998	C20XE	M	-		10/91 ▸ 03/98	90510182	**700023**	12X1.5 19
2.0 i	E	1998	C20NE	M			09/91 ▸ 08/93	90510183	**700019**	12X1.5 19
2.0 i 16V	E	1998	X20XEV	M			04/95 ▸ 03/98	90411977	**700021**	12X1.5 19
1.7 TD Turbo	D	1686	17TD	M			09/91 ▸ 03/98	3439088	**700005**	1/8X27 NPTF 13
1.7 TD Turbo	D	1699	X17DTL	M	+/-		08/94 ▸ 03/98	90510850	**700005**	1/8X27 NPTF 13
Astra IV (98>)										
1.6 i GNV 16V	G	1598	Z16YNG	M	+/-		03/03 ▸ 12/05	93174208	**700028**	12X1.5 19
1.6 i Twinport 16V	E	1598	Z16XEP	M	+/-		04/03 ▸ 12/05	93174208	**700028**	12X1.5 19
2.0 SRi Turbo 16V	E	1998	Z20LET	M	+/-		04/02 ▸	90541937	**700028**	12X1.5 19
2.2 i 16V	E	2198	Z22SE	M	+/-		07/00 ▸	15326388	**700018**	12X1.5 19
2.2 i 16V	E	2198	Z22SE	A	+/-		07/00 ▸	15326388	**700018**	12X1.5 19
1.7 DTi 16V	D	1686	Y17DT	M	+/-		01/00 ▸	15326386	**700020**	3/8X18 NPT 19
2.0 Di 16V	D	1995	X20DTL, Y20DTL	M	+/-		04/98 ▸	90541937	**700028**	12X1.5 19
Astra (2004>)										
1.4 Twinport 16V	E	1364	Z14XEP	M	+/-		03/04 ▸	90542063	**700028**	12X1.5 19
1.6 i Twinport 16V	E	1598	Z16XEP	M			03/04 ▸	93174208	**700028**	12X1.5 19
2.0 T 16V,2.0 i Turbo 16V	E	1998	Z20LEL, Z20LER	M	+/-		03/04 ▸	90541937	**700028**	12X1.5 19
1.7 CDTI,1.7 CDTI 16V	D	1686	Z17DTL, Z17DTH	M	+/-		03/04 ▸	97227219	**700028**	12X1.5 19
Calibra										
2.0 i,2.0 i 16V *JM07//1/D* 2.0 i Turbo	E	1998	X20XEV, C20XE, C20NE, C20LET	M	+/-		06/90 ▸	90510850	**700005**	1/8X27 NPTF 13
2.0 i 16V *JM07*	E	1998	X20XEV	M			06/90 ▸ 06/97	90411977	**700021**	12X1.5 19
2.0 i,2.0 i 16V *JM07//D*	E	1998	X20XEV, C20NE	A	+/-		06/90 ▸ 06/97	90510850	**700005**	1/8X27 NPTF 13
2.0 i 16V *JM07*	E	1998	X20XEV	A			02/94 ▸ 06/97	90411977	**700021**	12X1.5 19
2.5 i V6 *JM07*	E	2498	C25XE	M	+/-		08/93 ▸ 06/96	90510850	**700005**	1/8X27 NPTF 13
2.5 i V6 24V *JM07*	E	2498	X25XE-170	A	+/-		07/96 ▸	90510850	**700005**	1/8X27 NPTF 13
Carlton										
2.6 i *VM19L, VM35L*	E	2594	C26NE	M	+/-		09/90 ▸ 05/94	90510850	**700005**	1/8X27 NPTF 13
2.6 i *VM19L, VM35L*	E	2594	C26NE	A	+/-		09/90 ▸ 05/94	90510850	**700005**	1/8X27 NPTF 13
3.0 i	E	2968	30NE	M	+		10/89 ▸ 09/90	90510850	**700005**	1/8X27 NPTF 13
3.0 i	E	2968	30NE	M	+		10/89 ▸ 09/90	90510182	**700023**	12X1.5 19
3.6	E	3615	C36GET	M			09/90 ▸ 05/94	15326386	**700020**	3/8X18 NPT 19
Cavalier III (88>95)										
1.8,1.8 i *JM19/R/T, JM68/R/T*	E	1796	C18NZ, 18SV	M	+		10/89 ▸ 10/95	90510850	**700005**	1/8X27 NPTF 13
1.8,1.8 i *JM19/R, JM68/R/T*	E	1796	18SV, C18NZ	A	+		10/89 ▸ 10/95	90510850	**700005**	1/8X27 NPTF 13
2.0 i,2.0 i 16V *JM19//F/H/I, JM68//F/H*	E	1998	X20XEV, 20NE, 20XEJ, 20SEH	M	+/-		10/88 ▸	90510850	**700005**	1/8X27 NPTF 13
2.0 i *JM19H, JM68H*	E	1998	20NE	A	+		10/88 ▸	90510850	**700005**	1/8X27 NPTF 13
2.5 i V6	E	2498	C25XE	M	-		03/93 ▸ 07/94	90510850	**700005**	1/8X27 NPTF 13
Corsa I (93>2000)										
1.0 i 12V	E	973	X10XE	M	+/-		04/97 ▸ 08/00	3439088	**700005**	1/8X27 NPTF 13
1.2 i 16V	E	1199	X12XE	M	+/-		04/97 ▸ 08/00	3439088	**700005**	1/8X27 NPTF 13
1.2 i 16V	E	1199	X12XE	A	+/-		04/97 ▸ 08/00	90541937	**700028**	12X1.5 19
1.2 i 16V	E	1199	X12XE	A	+/-		04/97 ▸ 08/00	3439088	**700005**	1/8X27 NPTF 13
1.4 i	E	1389	C14NZ, C14SE	M	+/-		04/93 ▸ 12/97	90510183	**700019**	12X1.5 19
1.4 i,1.4 i 16V	E	1389	X14XE, C14SE, C14NZ	M	+/-		04/93 ▸	90510850	**700005**	1/8X27 NPTF 13
1.6 i 16V	E	1598	C16XE, X16XE	M	+/-		08/93 ▸	90510850	**700005**	1/8X27 NPTF 13
1.6 i 16V	E	1598	C16XE, X16XE	M	+/-		08/93 ▸ 12/97	90510183	**700019**	12X1.5 19
1.7 D	D	1699	17D	M	+/-		02/96 ▸ 08/00	3439088	**700005**	1/8X27 NPTF 13
Corsa II (2000>2003)										
1.0 i 12V	E	973	Z10XE	M	+/-		09/00 ▸	90542063	**700028**	12X1.5 19
1.2 i 16V	E	1199	Z12XE	M			09/00 ▸	90542063	**700028**	12X1.5 19

• **New** Nouveau **Nuevo** Novo **Nuovo** Nieuw **Neu** **Yeni** Новый Nou

			CC		AC			OE	Valeo	COD.	mm	
VAUXHALL (.../...)												
Corsa II (2000>2003) (.../...)												
1.4 i 16V		E	1389	Z14XE	M	+/-		09/00 ▸ 08/03	93174208	**700028**	12X1.5	19
1.4 i 16V		E	1389	Z14XE	A	+/-		09/00 ▸ 08/03	93174208	**700028**	12X1.5	19
1.7 DTi 16V,1.7 Di 16V		D	1686	Y17DT, Y17DTL	M	+/-		09/00 ▸ 08/03	15326386	**700020**	3/8X18 NPT	19
Corsa II (2003>)												
1.0 i 12V 1.0 i Twinport 12V	*AB68C, AC08C, AC68C* *AE08C, AE68C, AB08/C*	E	998	Z10XEP	M			09/03 ▸	90542063	**700028**	12X1.5	19
1.2 i 16V ▸ 19T75859	*A.68E, AB08E, AB68E* *AC08E, AC68E, AE08E* *AE68E, A.08/E*	E	1199	Z12XE	M			09/03 ▸	90542063	**700028**	12X1.5	19
1.4 i Twinport 16V	*AE68G, AS08G, AS68G, AE08G*	E	1364	Z14XEP	M			09/03 ▸	90542063	**700028**	12X1.5	19
1.4 i Twinport 16V		E	1364	Z14XEP	A			09/03 ▸	90542063	**700028**	12X1.5	19
1.7 CDTI 16V	*AS08J, AS68J*	D	1686	Z17DTH	M			09/03 ▸	97227219	**700028**	12X1.5	19
Frontera B (98>)												
3.2 i V6 24V		E	3165	Y32NE	M	+/-		03/01 ▸	94247437	**700043**	1/8 GAS	13
3.2 i V6 24V		E	3165	Y32NE	A	+/-		03/01 ▸	94247437	**700043**	1/8 GAS	13
Meriva												
1.6 i,1.6 i 16V		E	1598	Z16XE, Z16SE/E4	M			05/03 ▸	93174208	**700028**	12X1.5	19
1.7 CDTi 16V,1.7 DTi 16V		D	1686	Z17DTH, Y17DT	M			05/03 ▸	97227219	**700028**	12X1.5	19
Monterey A (94>99)												
3.2 i	*UBS25*	E	3165	6VDI	M			05/94 ▸ 06/98	15326386	**700020**	3/8X18 NPT	19
3.2 i	*UBS25*	E	3165	6VDI	A			05/94 ▸ 06/98	15326386	**700020**	3/8X18 NPT	19
Omega												
2.0 i	*F69, M35*	E	1998	X20SE	M	+/-		04/94 ▸ 10/95	90510183	**700019**	12X1.5	19
2.0 i	*F69, M35*	E	1998	X20SE	A	+/-		04/94 ▸ 10/95	90510183	**700019**	12X1.5	19
2.0 i 16V ▸ 14384799	*F69, M35*	E	1998	X20XEV	M	+/-		04/94 ▸	90411977	**700021**	12X1.5	19
2.0 i 16V ▸ 14384799	*F69, M35*	E	1998	X20XEV	A	+/-		04/94 ▸	90411977	**700021**	12X1.5	19
2.5 i V6 24V	*F69, M35*	E	2498	X25XE-170	M	+/-		04/94 ▸ 12/03	90541520	**700028**	12X1.5	19
2.5 i V6 24V	*F69, M35*	E	2498	X25XE-170	M	+/-		04/94 ▸	90510183	**700019**	12X1.5	19
2.5 i V6 24V	*F69, M35*	E	2498	X25XE-170	A	+/-		04/94 ▸ 12/03	90541520	**700028**	12X1.5	19
2.5 i V6 24V	*F69, M35*	E	2498	X25XE-170	A	+/-		04/94 ▸	90510183	**700019**	12X1.5	19
2.6 i V6 24V		E	2597	Y26SE	M	+/-		09/00 ▸	90541937	**700028**	12X1.5	19
2.6 i V6 24V		E	2597	Y26SE	A	+/-		09/00 ▸	90541937	**700028**	12X1.5	19
3.0 i,3.0 i V6	*F69, M35*	E	2962	X30XE	M	+/-		06/94 ▸ 12/03	90541520	**700028**	12X1.5	19
3.0 i,3.0 i V6	*F69, M35*	E	2962	X30XE	M	+/-		06/94 ▸	90510183	**700019**	12X1.5	19
3.0 i,3.0 i V6	*F69, M35*	E	2962	X30XE	A	+/-		06/94 ▸ 12/03	90541520	**700028**	12X1.5	19
3.0 i,3.0 i V6	*F69, M35*	E	2962	X30XE	A	+/-		06/94 ▸	90510183	**700019**	12X1.5	19
3.2 i V6 24V	*F69, M35*	E	3175	Y32SE	A	+/-		09/00 ▸	90541937	**700028**	12X1.5	19
2.0 Di 16V		D	1995	X20DTH	M	+/-		01/98 ▸ 09/00	90541937	**700028**	12X1.5	19
2.0 Di 16V		D	1995	X20DTH	M	+/-		01/98 ▸ 09/00	3439088	**700005**	1/8X27 NPTF	13
2.0 Di 16V		D	1995	X20DTH	A	+/-		01/98 ▸ 09/00	90541937	**700028**	12X1.5	19
2.0 Di 16V	*F69*	D	1995	X20DTH	A	+/-		01/98 ▸ 09/00	3439088	**700005**	1/8X27 NPTF	13
2.2 DTi 16V		D	2171	Y22DTH	M	+/-		09/00 ▸	90541937	**700028**	12X1.5	19
2.2 DTi 16V		D	2171	Y22DTH	M	+/-		09/00 ▸	90510850	**700005**	1/8X27 NPTF	13
2.5 TD	*F69, M35*	D	2497	U25TD, X25TD	M	+/-		04/94 ▸	90487859	**700022**	12X1.5	19
2.5 TD	*F69, M35*	D	2497	X25TD, U25TD	A	+/-		04/94 ▸	90487859	**700022**	12X1.5	19
Senator (87>93)												
2.5 i	*P19*	E	2490	25NE	M			09/87 ▸ 09/90	90510850	**700005**	1/8X27 NPTF	13
2.5 i	*P19*	E	2490	25NE	M			09/87 ▸ 09/90	90510182	**700023**	12X1.5	19
2.6 i	*VP19L*	E	2594	C26NE	M			09/90 ▸ 08/93	90510850	**700005**	1/8X27 NPTF	13
2.6 i	*VP19L*	E	2594	C26NE	A			09/90 ▸ 08/93	90510850	**700005**	1/8X27 NPTF	13
3.0 i	*VP19Q*	E	2968	C30NE, 30NE	M			09/87 ▸ 10/92	90510182	**700023**	12X1.5	19
3.0 i,3.0 i 24V	*P19, VP19Q*	E	2968	C30NE, C30SE, 30NE	M			09/87 ▸ 08/93	90510850	**700005**	1/8X27 NPTF	13
3.0 i	*VP19Q*	E	2968	C30NE, 30NE	A			09/87 ▸ 10/92	90510182	**700023**	12X1.5	19

• **New** Nouveau **Nuevo** Novo **Nuovo** Nieuw **Neu** **Yeni** Новый Nou

Valeo

Water temperature sensor
Sonde à thermistance
Sensor de temperatura de água
Sensor de temperatura de água
Sensore temperatura acqua
Watertemperatuursensor
Wassertemperaturfühler

Czujnik temperatury wody
Snímač teploty vody
Comutator de temperatură
Su sicklik sensörü
датчик температуры воды

Type Ctr.		cc		AC			OE	Valeo	COD.	mm
VAUXHALL (.../...)										
Senator (87>93) (.../...)										
3.0 i,3.0 i 24V *P19, VP19Q*	E	2968	30NE, C30NE, C30SE	A			09/87 ▸ 08/93	90510850	**700005**	1/8X27 NPTF	13
Tigra Twintop										
1.4 i Twinport 16V	E	1364	Z14XEP	M	+/-		07/04 ▸	90542063	**700028**	12X1.5	19
Vectra (2002>2005)										
2.2 i 16V	E	2198	Z22SE	M			04/02 ▸	15326388	**700018**	12X1.5	19
2.2 i 16V	E	2198	Z22SE	A			04/02 ▸	15326388	**700018**	12X1.5	19
3.2 i V6 24V	E	3175	Z32SE	M			04/02 ▸	90542063	**700028**	12X1.5	19
3.2 i V6 24V	E	3175	Z32SE	A			04/02 ▸	90542063	**700028**	12X1.5	19
Vectra (2005>)										
1.6 i 16V	E	1598	Z16XE	M			10/05 ▸	93174208	**700028**	12X1.5	19
2.0 i Turbo 16V	E	1998	Z20NET	M			10/05 ▸	15393755	**700028**	12X1.5	19
2.2 DGI 16V	E	2198	Z22YH	M			10/05 ▸	15326388	**700018**	12X1.5	19
2.2 DGI 16V	E	2198	Z22YH	A			10/05 ▸	15326388	**700018**	12X1.5	19
2.8 i V6 Turbo 24V	E	2792	Z28NEL	M			10/05 ▸	12566778	**700028**	12X1.5	19
2.8 i V6 Turbo 24V	E	2792	Z28NEL	A			10/05 ▸	12566778	**700028**	12X1.5	19
3.0 CDTI V6 24V	D	2958	Z30DT	M			10/05 ▸	15326386	**700020**	3/8X18 NPT	19
3.0 CDTI V6 24V	D	2958	Z30DT	A			10/05 ▸	15326386	**700020**	3/8X18 NPT	19
Zafira II (2005>)										
1.6 i Twinport 16V	E	1598	Z16XEP	M			07/05 ▸	93174208	**700028**	12X1.5	19
VAUXHALL										
Movano										
2.5 D *FD, JD, UD, ED*	D	2445	S8U.7.72	M			10/98 ▸ 10/01	9109810	**700016**	12X1.5	19
2.8 Dti *FD, JD, UD, ED*	D	2800	S9W.7.02, S9W.7.00	M			10/98 ▸ 10/01	9109810	**700016**	12X1.5	19
VOLKSWAGEN										
Corrado										
1.8 i G60 *5090*	E	1781	PG	M			09/88 ▸ 07/93	025906041A	**700011**		20
1.8 i G60 *5090*	E	1781	PG	A			08/89 ▸ 07/92	025906041A	**700011**		20
1.8 i G60 *5090*	E	1781	PG	M	+/-		09/88 ▸ 07/93	251919501D	●**700036**	20	
1.8 i G60 *5090*	E	1781	PG	A	+/-		08/89 ▸ 07/92	251919501D	●**700036**	20	
Golf I Cabriolet (79>93)										
1.3 i *1552*	E	1272	HK	M	+/-		08/83 ▸ 07/86	251919501D	●**700036**	20	
1.6 *154/2/4, 155/2/4*	E	1595	EW,HN	M	+/-		08/83 ▸ 07/92	251919501D	●**700036**	20	
1.6 *154/2/4, 155/2/4*	E	1595	EW,HN	A	+/-		08/83 ▸ 07/92	251919501D	●**700036**	20	
1.8,1.8 i *154/2/4/A, 155/2/4/A/J/K*	E	1781	2H,DX,EX,JH,KT	M	+/-		08/83 ▸ 07/93	251919501D	●**700036**	20	
1.8,1.8 i *154/2/4, 155/2/4/J/K*	E	1781	2H,EX,JH	A	+/-		08/83 ▸ 07/93	251919501D	●**700036**	20	
Golf II (83>91)										
1.05 *1920, 191/0/1/2, 1940, 193/0/1/2 1G1/1/2/3*	E	1043	HZ	M	+/-		05/85 ▸ 10/91	251919501D	●**700036**	20	
1.3 *193/0/1/2, 1G1/0/1/2/3*	E	1272	2G,MH,NZ	M	+/-		08/85 ▸ 07/92	251919501D	●**700036**	20	
1.6 *191/0, 1G1/1/2/3*	E	1595	ABN,ABX,EZ,PN,RF	M	+/-		08/86 ▸ 07/92	251919501D	●**700036**	20	
1.6 *1G1/1/2/3*	E	1595	EZ,PN,RF	A	+/-		08/88 ▸ 07/92	251919501D	●**700036**	20	
1.8 G60 *1G17, 1G47*	E	1763	1H	M	+/-		08/88 ▸ 12/89	251919501D	●**700036**	20	
1.8,1.8 G60,1.8 i 1.8 i 16V *191/0/3/G/N/U/V/W/Z, 192 0/3, 193/0/3/N/P/T/U/V/W 194/0/1/3, 1G47, 1G1/1/2 3/5/7/J*	E	1781	1P,EV,GU,GX,KR,PB,PF,PG,PL,RD RH,RP,RV	M	+/-		01/84 ▸ 10/91	251919501D	●**700036**	20	
1.8,1.8 i *191/0/1/G, 192/0/1, 193/0 1/2/T, 194/0/1/2, 1G1/1/2 3/5*	E	1781	GU,GX,RH,RP,RV	A	+/-		08/83 ▸ 10/91	251919501D	●**700036**	20	

• **New** Nouveau **Nuevo** Novo **Nuovo** Nieuw **Neu** **Yeni** Новый Nou

			CC		AC			OE	Valeo	COD.	mm	
VOLKSWAGEN (.../...)												
Golf II (83>91) (.../...)												
1.6 D,1.6 TD	*1920, 191/0/1/2/T/V, 193 0/1/2/T, 194/0/1/2, 1G1/1 2/3/5*	D	1588	1V,JP,JR,ME,MF,RA,SB	M	+/-		08/85 ▸ 07/92	251919501D	●700036	20	
1.6 D	*1G1/1/2/3*	D	1588	JP	A	+/-		08/88 ▸ 10/91	251919501D	●700036	20	
Golf II Cabriolet (93>98)												
1.8 i	*1E7/3/5*	E	1781	ADZ,ANN	M	+/-		07/95 ▸ 02/98	251919501D	●700036	20	
1.8 i	*1E7/3/5*	E	1781	ADZ	A	+/-		12/95 ▸ 02/98	251919501D	●700036	20	
2.0 i	*1E7/3/5*	E	1984	2E,ADY,AGG,AKR	M	+/-		09/93 ▸ 02/98	251919501D	●700036	20	
2.0 i	*1E7/3/5*	E	1984	2E,ADY,AGG	A	+/-		09/93 ▸ 02/98	251919501D	●700036	20	
Golf III (91>97)												
1.4,1.4 i	*1H1/0/2/3/B, 1H5/0/2/B*	E	1390	AEX, APQ	M	+/-		07/95 ▸ 05/98	6U0919501B	700012		20
1.4,1.4 i	*1H52, 1H1/2/3*	E	1391	ABD	M			11/91 ▸ 07/95	357919501	700013		20
1.6,1.6 i	*1H1/0/2/3/5/B/E, 1H5/0/2 3/5/B*	E	1598	AEK, AFT, AEE, AKS, AEA	M	+/-		11/91 ▸ 02/99	6U0919501B	700012		20
1.6	*1H1/2/3*	E	1598	ABU	M			09/92 ▸ 09/94	357919501	700013		20
1.6 i	*1H1/0/2/3/B, 1H5/0/2/3/B*	E	1598	AFT, AEK	A	+/-		10/94 ▸ 02/99	6U0919501B	700012		20
1.8,1.8 i	*1H1/0/2/3/5, 1H5/0/2/3/5*	E	1781	ABS, AAM	M			11/91 ▸ 02/99	357919501	700013		20
1.8,1.8 i	*1H1/0/2/3/5, 1H5/0/2/3/5*	E	1781	ACC, ADZ, ANP	M			10/94 ▸ 04/99	6U0919501B	700012		20
1.8 i	*1H1/0/2/3, 1H5/0/2/3*	E	1781	ADZ, ANP	A	+/-		10/94 ▸ 02/99	6U0919501B	700012		20
1.8,1.8 i	*1H1/0/2/3, 1H5/0/2/3*	E	1781	AAM, ABS	A			11/91 ▸ 02/99	357919501	700013		20
1.8,1.8 i	*1H1/0/2/3/5, 1H5/0/2/3/5*	E	1781	ADZ	M	+/-		10/94 ▸ 04/99	251919501D	●700036	20	
1.8 i	*1H1/0/2/3, 1H5/0/2/3*	E	1781	ADZ	A	+/-		10/94 ▸ 02/99	251919501D	●700036	20	
2.0 16V	*1H16*	E	1984	ABF	M	+/-		03/92 ▸ 12/97	026906161	700038	10X1	19
2.0 E,2.0 i	*1H33, 1H1/0/2/3/5/6, 1H5 0/2/3/5*	E	1984	AGG, ADY, AKR, AEP	M	+/-		05/94 ▸ 04/99	6U0919501B	700012		20
2.0 E,2.0 i	*1H1/2/3/5/6, 1H5/3/5*	E	1984	2E	M			11/91 ▸ 09/94	357919501	700013		20
2.0 E,2.0 i	*1H1/0/2/3, 1H5/0/2/3*	E	1984	ADY, AGG, AEP	A	+/-		10/94 ▸ 02/99	6U0919501B	700012		20
2.0 E,2.0 i	*1H53, 1H1/2/3*	E	1984	2E	A			11/91 ▸ 09/94	357919501	700013		20
2.9 i VR6	*1H56, 1H1/3/6*	E	2861	ABV	M	+/-		01/94 ▸ 04/99	025906041A	700011		20
1.9 SDi,1.9 SDi Ecomatic 1.9 TDi	*1H0/0, 1H1/0/2/3/5, 1H5/0 2/3/5*	D	1896	1Z, AEY, AHU, AFN, ALE	M	+/-		06/93 ▸ 04/99	6U0919501B	700012		20
1.9 D,1.9 D Ecomatic 1.9 TD	*1H1/0/2/3/5, 1H5/0/2/3/5*	D	1896	AAZ, 1Y	M			11/91 ▸ 02/99	357919501	700013		20
1.9 TDi	*1H1/0/2/3/5, 1H5/0/2/3/5*	D	1896	1Z	M			06/93 ▸ 07/96	025906041	700019	12X1.5	19
1.9 SDi,1.9 SDi Ecomatic	*1H1/0/2/3, 1H5/0/2/3*	D	1896	AEY	M			01/95 ▸ 02/99	025906041A	700011		20
1.9 TDi	*1H1/0/2/3, 1H5/0/2/3/B*	D	1896	1Z, AFN, AHU	A	+/-		06/93 ▸ 02/99	6U0919501B	700012		20
1.9 TD	*1H1/2/3*	D	1896	AAZ	A			11/91 ▸ 06/93	357919501	700013		20
1.9 TDi	*1H1/2/3, 1H5/0/2/3/B*	D	1896	1Z	A			06/93 ▸ 07/96	025906041	700019	12X1.5	19
1.9 TD,1.9 TDi	*1H0/0, 1H1/0/2/3/5, 1H5/0 2/3/5*	D	1896	1Z,AAZ,AFN,AHU,ALE	M	+/-		11/91 ▸ 04/99	251919501D	●700036	20	
1.9 TD,1.9 TDi	*1H1/0/2/3, 1H5/0/2/3/B*	D	1896	1Z,AAZ,AFN,AHU	A	+/-		11/91 ▸ 02/99	251919501D	●700036	20	
Jetta II (83>92)												
1.05	*1G22, 167/0/1*	E	1043	HZ	M	+/-		08/86 ▸ 10/91	251919501	700044	20	
1.3,1.3 i	*165/0/1/2/G/H/J, 167/0/1 2/3/G/H/J, 168/0/1, 1G2/2 3*	E	1272	NZ, NU, MH, GT, HK, 2C	M	+/-		08/83 ▸ 07/92	251919501	700044	20	
1.6	*165/0/1/2/G/H/J, 167/0/1/2/G/H/J 168/0/1/2, 1G2/2/3*	E	1595	PN, EZ, HM, RF	M	+/-		08/83 ▸ 07/92	251919501	700044	20	
1.6	*165/0/1/2, 167/0/1/2, 168/0/1/2 1G2/2/3*	E	1595	EZ, RF, HM, PN	A	+/-		08/83 ▸ 07/92	251919501	700044	20	
1.8,1.8 i,1.8 i 16V	*165/0/1/2/3/G/H/J/N/S/T 167/0/1/2/3/7/G/H/J/K/N S/T/U/V/Z, 168/0/2/3/7/U V/Z, 1G2/1/2/3/5*	E	1781	RV, GX, HV, GU, KR, EV, RD GZ, PF, RP, PL, GU-K, RH, PB 1P	M	+/-		01/84 ▸ 10/91	251919501	700044	20	
1.8,1.8 i	*165/0/1/2/G/H/J, 167/0/1 2/7/G/H/J/K, 168/0/2/7 1G2/1/2/3*	E	1781	GU, GX, HV, RP, RV, RH, PF	A	+/-		01/84 ▸ 10/91	251919501	700044	20	
Lupo												
1.0 i	*6X10*	E	999	AHT, AER, ALL	M			10/98 ▸ 05/00	6U0919501B	700012		20

• **New** Nouveau **Nuevo** Novo **Nuovo** Nieuw **Neu** **Yeni** Новый Nou

			cc		AC			OE	Valeo	COD.		mm
VOLKSWAGEN (.../...)												
Lupo (.../...)												
1.7 SDi	*6X10*	D	1716	AKU	M			10/98 ▸ 07/05	6U0919501B	**700012**		20
Passat (82>88)												
1.3	*321/5/6/7, 322/5/7, 323/5/6/7, 324 5/6/7, 331/5/6/7, 332/5/6/7*	E	1272	FZ, FY	M	+/-		08/81 ▸ 07/83	251919501	**700044**	20	
1.3,1.3 i	*323/6, 331/6/7*	E	1297	EU	A	+/-		08/83 ▸ 07/84	251919501	**700044**	20	
1.3 ▸ 32-H-400000	*321/0/1/5/6, 323/0/1/2/5/6/7/R/S 327/R/S, 331/0/1/5/6/7/R/S*	E	1297	EP, EU	M	+/-		08/83 ▸ 07/87	251919501	**700044**	20	
1.6	*321/5/6/7, 322/5/6/7, 323/5/6/7 324/5/6/7, 331/5/6/7, 332/5/6/7*	E	1588	WV, WY, YP	A	+/-		08/81 ▸ 12/84	251919501	**700044**	20	
1.6 ▸ 32-H-400000	*321/5/6/7/A/B/C, 322/5/6/7, 323/5/6 7/A/B/C, 324/5/6/7/A/B/C, 331/5/6/7 A/B/C, 332/5/6/7/A/B/C*	E	1588	WV, WY, YP	M	+/-		08/81 ▸ 07/87	251919501	**700044**	20	
1.6 ▸ 32-H-400000	*321/0/1/2, 323/0/1/2/D/J/K/L/R/S/T 324/0/R, 328R, 327/R/S/T, 331/0/1 6/7/C/D/K/L/R/S/T, 332/0/5*	E	1595	PP, DT, JU, DTA	M	+/-		08/83 ▸ 07/87	251919501	**700044**	20	
1.6 ▸ 32-H-400000	*321/0/1/2, 323/0/1/2/D/R/S/T, 327/R S/T, 331/0/1/D/R/S/T*	E	1595	DT	A	+/-		08/84 ▸ 07/87	251919501	**700044**	20	
1.8,1.8 i ▸ 32-H-400000	*321/0/1/2/6, 323/0/1/2/D E/G/H/J/K/L/R/S/T, 324/D S, 327/7/J/K/L/R/S/T, 328 S/T, 331/0/1/D/E/G/H/J/K L/R/S/T/U/Y, 332/1/S*	E	1781	DS, JN, JV, DZ, RM	M	+/-		08/83 ▸ 07/87	251919501	**700044**	20	
1.8,1.8 i ▸ 32-H-400000	*321/0/1/2, 324S, 323/0/1 2/D/E/G/H/J/K/L/R/S/T 327/7/J/K/L/R/S/T, 328/S T, 331/0/1/D/E/G/H/J/K/L R/S/T, 332/1/S*	E	1781	JV, JN, DS, RM	A	+/-		08/83 ▸ 07/87	251919501	**700044**	20	
1.9	*321/5/6/7, 323/5/6/7, 324/5/6/7 331/5/6/7, 332/5/6/7*	E	1921	WN	M	+/-		08/81 ▸ 07/83	251919501	**700044**	20	
1.9	*321/5/6/7, 323/5/6/7, 324/5/6/7 331/5/6/7, 332/5/6/7*	E	1921	WN	A	+/-		08/81 ▸ 07/84	251919501	**700044**	20	
2.0 i ▸ 32-H-400000	*323/1/2/6/7/A/D/R/T, 324/1/2/A/D/R T, 327/C/R/T, 328/C/R/T, 331/1/6/7 8/D/P/R/T/N/W, 332/A/D/R/T*	E	1994	HP, JS	M	+/-		08/83 ▸ 07/87	251919501	**700044**	20	
2.0 i ▸ 32-H-400000	*323/1/2/6/7/A/D/R/T, 324/1/2/A/D/R T, 327/C/R/T, 328/C/R/T, 331/1/6/7 A/D/R/T, 332/A/D/R/T*	E	1994	JS, HP	A	+/-		08/83 ▸ 07/87	251919501	**700044**	20	
2.2,2.2 i	*321/5/6/7, 323/5/6/7, 331 5/6/7*	E	2144	WE	M	+/-		08/81 ▸ 07/83	251919501	**700044**	20	
2.2,2.2 i	*321/5/6/7, 323/5/6/7, 331 5/6/7*	E	2144	WE	A	+/-		08/81 ▸ 07/83	251919501	**700044**	20	
2.3,2.3 i ▸ 32-H-400000	*324K, 323/D/E/J/K, 328K 327/F/J/K, 332K, 331/8/D E/J/K/Q/W/Z*	E	2226	KX, KV, JT, HY	M	+/-		08/84 ▸ 07/87	251919501	**700044**	20	
2.3 i ▸ 32-H-400000	*324K, 323/E/J/K, 328K, 327/F/J/K 332K, 331/E/J/K*	E	2226	KX	A	+/-		08/85 ▸ 07/87	251919501	**700044**	20	
1.6 D,1.6 TD ▸ 32-H-400000	*321/0/1/2/5/6/7, 322/5/6 7, 323/0/1/2/5/6/7/D/R/S T, 324/0/1/2/5/6/7/R/S/T 327/4/J/L/R/S/T, 328/R/S T, 331/0/1/5/6/7/D/R/S/T 332/0/1/5/6/7/R/S/T*	D	1588	CR, JK, CY	M	+/-		08/81 ▸ 07/87	251919501	**700044**	20	
1.6 D,1.6 TD ▸ 32-H-400000	*321/0/1/2/5/6/7, 322/5/6 7, 323/0/1/2/5/6/7/R/S/T 324/5/6/7, 327/R/S/T 331/0/1/5/6/7/R/S/T, 332 5/6/7*	D	1588	CR, CY, JK	A	+/-		08/81 ▸ 07/87	251919501	**700044**	20	
Passat (88>93)												
1.6 i	*312/1/2/3, 315/1/2/3*	E	1595	1F	M			08/88 ▸ 07/91	025906041A	**700011**		20
1.6 i	*312/2/3, 315/2/3*	E	1595	1F	A			08/88 ▸ 07/89	025906041A	**700011**		20
1.8,1.8 i	*312/1/2/3/5, 315/1/2/3/5*	E	1781	ABS, RP, PB, AAM, PF	M			04/88 ▸ 10/93	025906041A	**700011**		20

• **New** Nouveau **Nuevo** Novo **Nuovo** Nieuw **Neu** **Yeni** Новый Nou

Type Ctr.		CC		AC			OE	Valeo	COD.	mm
VOLKSWAGEN (.../...)										
Passat (88>93) (.../...)										
1.8,1.8 i	*312/1/2/3/5, 315/1/2/3/5*	E	1781	RP, PF, ABS, PB	A			08/88 ▸ 10/93	025906041A	**700011**		20
2.0,2.0 i	*312/1/2/3/5, 315/1/2/3/5*	E	1984	2E, ACX	M			08/89 ▸ 10/93	025906041A	**700011**		20
2.0,2.0 i	*312/1/2/3/5, 315/1/2/3/5*	E	1984	2E	A			08/89 ▸ 10/93	025906041A	**700011**		20
Passat (93>97)										
2.8 i VR6	*3A2/3/6, 3A5/3/6*	E	2792	AAA	M			10/93 ▸ 12/96	025906041A	**700011**		20
2.8 i VR6	*3A2/3/6, 3A5/3/6*	E	2792	AAA	A			10/93 ▸ 12/96	025906041A	**700011**		20
1.9 TDi	*3A2/2/3/5/A, 3A5/2/3/5*	D	1896	1Z, AHU	M			10/93 ▸ 12/96	025906041A	**700011**		20
1.9 TDi	*3A2/2/3/5/A, 3A5/2/3/5/A*	D	1896	AHU, 1Z	A			10/93 ▸ 12/96	025906041A	**700011**		20
Phaeton Phase I (2002>2007)										
3.2 i VR6 24V	*3D2/5/6, 3D8/5/6*	E	3189	BKL, AYT	M	+/-		05/02 ▸ 05/04	357919501	**700013**		20
3.2 i VR6 24V	*3D2/5/6, 3D8/5/6*	E	3189	BRK, AYT, BKL	A	+/-		05/02 ▸	357919501	**700013**		20
3.0 TDi V6 24V	*3D2/5/6, 3D8/5/6*	D	2967	BMK	A	+/-		09/04 ▸	357919501	**700013**		20
Polo (81>86)										
1.05 G-000001 ▸	*867/0/1/D, 868/0/D, 8721, 871/0/1*	E	1043	GL, HZ	M	+/-		08/85 ▸ 07/86	251919501	**700044**	20	
Polo (86>90)										
1.05	*801/2/5, 803/2/6*	E	1043	AAK	M	+/-		08/88 ▸ 10/90	251919501D	●**700036**	20	
1.05 K-000001 ▸	*8022, 801/0/1/2/5/6, 803/2/6*	E	1043	GL,HZ	M			08/88 ▸ 10/90	251919501D	●**700036**	20	
1.3	*801/0/2/5, 802/1/2, 803/2/5*	E	1272	2G,3F,GK,NZ,PY	M	+/-		08/88 ▸ 10/90	251919501D	●**700036**	20	
1.3 K-000001 ▸	*801/2/5/6, 802/1/2, 803/2/5/6*	E	1272	GK,GT,MH,NU,NZ,PY	M			08/88 ▸ 10/90	251919501D	●**700036**	20	
1.3 D	*8016*	D	1272	MN	M	+/-		08/88 ▸ 10/90	251919501D	●**700036**	20	
1.3 D K-000001 ▸	*8036, 802/1/2*	D	1272	MN	M			08/88 ▸ 10/90	251919501D	●**700036**	20	
Polo (81>86)										
1.3 G-000001 ▸	*8680, 867/0/1/2, 871/0/1/3, 873/0/1*	E	1272	GT, MH, GK	M	+/-		08/85 ▸ 07/86	251919501	**700044**	20	
Polo (86>90)										
1.05 ▸ J-220000	*8022, 801/0/1/2/5/6, 803/2/6*	E	1043	HZ, GL	M	+/-		08/86 ▸ 07/88	251919501	**700044**	20	
1.3 ▸ J-220000	*801/2/5/6, 802/1/2, 803/2/5/6*	E	1272	NZ, NU, MH, GK, GT, PY	M	+/-		08/86 ▸ 07/88	251919501	**700044**	20	
1.3 D ▸ J-220000	*802/1/2, 803/1/2/6*	D	1272	MN	M	+/-		08/86 ▸ 07/88	251919501	**700044**	20	
Polo (90>94)										
1.4 D	*8022, 801/2/5/6, 803/2/6*	D	1391	1W	M	+/-		10/90 ▸ 10/94	251919501D	●**700036**	20	
Polo (94>99)										
1.0 i	*6N10*	E	999	AER, ALL	M			07/96 ▸ 12/99	6U0919501B	**700012**		20
1.0 i	*6N10*	E	1043	AEV	M			10/94 ▸ 06/96	025906041A	**700011**		20
1.0 i	*6N10*	E	1043	AEV	M			10/94 ▸ 06/96	6U0919501B	**700012**		20
1.3 i	*6N10*	E	1296	ADX	M	+/-		10/94 ▸ 04/97	6U0919501B	**700012**		20
1.4 i,1.4 i 16V	*6V20, 6V50, 6N1/0*	E	1390	ANX, AEX, APQ, AKV, AFH	M			07/95 ▸ 12/99	6U0919501B	**700012**		20
1.4 i	*6N10*	E	1390	APQ, AEX, AKV, ANX	A	+/-		10/95 ▸ 12/99	6U0919501B	**700012**		20
1.6 i	*6V20*	E	1595	1F	M	+/-		05/96 ▸ 09/97	6U0919501B	**700012**		20
1.6 i	*6V20, 6V50, 6N1/0*	E	1598	AEE, AEA, ALM, AFT	M			10/94 ▸ 09/99	6U0919501B	**700012**		20
1.6 i	*6V20, 6V50, 6N1/0*	E	1598	AHS, AEE, AFT	A			07/95 ▸ 12/99	6U0919501B	**700012**		20
1.8 i	*6V20*	E	1781	ADD	M	+/-		03/98 ▸ 08/99	6U0919501B	**700012**		20
2.0 i	*6V20*	E	1984	ADC	M	+/-		08/99 ▸ 08/99	6U0919501B	**700012**		20
2.0 i	*6V20*	E	1984	ADC	A	+/-		08/99 ▸ 08/99	6U0919501B	**700012**		20
1.7 SDI	*6V20, 6V50, 6N1/0*	D	1716	AHG, AKU, AKW	M			04/97 ▸ 12/99	6U0919501B	**700012**		20
1.9 SDi	*6V20, 6V50*	D	1896	AEY	M	+/-		05/96 ▸ 09/99	025906041A	**700011**		20
1.9 D,1.9 SDi	*6N10, 6V20*	D	1896	AEF, 1Y	M			10/94 ▸ 05/99	357919501	**700013**		20
1.9 SDI,1.9 TDi	*6V20, 6V50, 6N1/0*	D	1896	AGD, AHU	M			07/96 ▸ 12/99	6U0919501B	**700012**		20
Polo (99>2001)										
1.6 i	*6V20, 6V50*	E	1598	ALM	M	+/-		10/99 ▸ 09/01	6U0919501B	**700012**		20

• **New** Nouveau **Nuevo** Novo **Nuovo** Nieuw **Neu** **Yeni** Новый Nou

Valeo

Water temperature sensor
Sonde à thermistance
Sensor de temperatura de água
Sensor de temperatura de água
Sensore temperatura acqua
Watertemperatuursensor
Wassertemperaturfühler

Czujnik temperatury wody
Snímač teploty vody
Comutator de temperatură
Su sicklik sensörü
датчик температуры воды

Type Ctr.	E/D	cc		AC		2 3	OE	Valeo	COD.	mm
VOLKSWAGEN (.../...)										
Polo (99>2001) (.../...)										
1.8 i *6V20*	E	1781	ADD	M	-	03/00 ▸ 09/01	6U0919501B	**700012**		20
2.0 i *6V20*	E	1984	ADC	M	-	06/00 ▸ 09/01	6U0919501B	**700012**		20
2.0 i *6V20*	E	1984	ADC	A	-	06/00 ▸ 09/01	6U0919501B	**700012**		20
1.9 SDi *6N2/0/1/2/3*	D	1896	AGD	M	+/-	10/99 ▸ 09/01	357919501A	**700012**		20
1.9 D *6N2/0/1/2/3*	D	1896	AEF	M		10/99 ▸ 07/01	357919501	**700013**		20
Scirocco (74>90)										
1.3 *533*	E	1272	HK	M	+/-	08/83 ▸ 07/84	251919501D	●**700036**	20	
1.6 *533/1/4*	E	1595	EW,EWA,HN	M	+/-	08/83 ▸ 07/90	251919501D	●**700036**	20	
1.6 *533*	E	1595	EW,HN	A	+/-	08/83 ▸ 07/86	251919501D	●**700036**	20	
1.8,1.8 16V *533//1/2/4*	E	1781	DX,EX,JH,KR,KT	M	+/-	08/83 ▸ 07/90	251919501D	●**700036**	20	
1.8 *5331*	E	1781	EX	A	+/-	08/83 ▸ 07/90	251919501D	●**700036**	20	
Sharan (95>2000)										
1.8 i Turbo 20V *7M8/2/3/5/9*	E	1781	AJH	M	+/-	11/97 ▸ 02/00	6U0919501B	**700012**		20
1.8 i Turbo 20V *7M8/2/3/5/9*	E	1781	AJH	A	+/-	11/97 ▸ 02/00	6U0919501B	**700012**		20
1.8 i Turbo 20V *7M8/2/3/5/9*	E	1781	AJH	M		11/97 ▸ 02/00	251919501D	●**700036**	20	
1.8 i Turbo 20V *7M8/3/5/9*	E	1781	AJH	A		11/97 ▸ 02/00	251919501D	●**700036**	20	
2.0 i *7M8/2/3/5/9*	E	1984	ADY	M	+/-	09/95 ▸ 02/00	6U0919501B	**700012**		20
2.0 i *7M8/2/3/5/9*	E	1984	ADY	A	+/-	09/95 ▸ 02/00	6U0919501B	**700012**		20
1.9 TDi *7M8/2/3/5/9*	D	1896	1Z, AHU, AFN, AVG, ANU	M		09/95 ▸ 02/00	6U0919501B	**700012**		20
1.9 TDi *7M8/2/3/5/9*	D	1896	AFN, AVG	A	+/-	12/96 ▸ 02/00	6U0919501B	**700012**		20
1.9 TDi *7M8/2/3/5/9*	D	1896	1Z,AFN,AHU,ANU,AVG	M		09/95 ▸ 02/00	251919501D	●**700036**	20	
1.9 TDi *7M8/2/3/5/9*	D	1896	AFN,AVG	A		12/96 ▸ 02/00	251919501D	●**700036**	20	
Sharan (2000>2003)										
2.8 i V6 *7M9/2/3/5/9*	E	2792	AYL	M		04/00 ▸ 05/03	251919501D	●**700036**	20	
2.8 i V6,2.8 i VR6 *7M9/2/3/5/9*	E	2792	AYL	A		04/00 ▸ 05/03	251919501D	●**700036**	20	
1.9 TDi *7M9/2/3/5/9*	D	1896	ASZ	M	+/-	11/02 ▸ 05/03	251919501D	●**700036**	20	
Sharan (2003>)										
1.8 i Turbo 20V *7M6/0/1/2/3/S/T*	E	1781	AWC	M	+/-	06/03 ▸	251919501D	●**700036**	20	
1.8 i Turbo 20V *7M6/0/1/2/3/S/T*	E	1781	AWC	A	+/-	06/03 ▸ 05/06	251919501D	●**700036**	20	
2.0 i *7M6/0/1/2/3/S/T*	E	1984	ATM	M	+/-	06/03 ▸	251919501D	●**700036**	20	
2.0 i *7M6/0/1/2/3/S/T*	E	1984	ATM	A	+/-	06/03 ▸ 05/08	251919501D	●**700036**	20	
2.8 i VR6 *7M6/0/1/2/3/S/T*	E	2792	AYL	M	+/-	06/03 ▸	251919501D	●**700036**	20	
2.8 i VR6 *7M6/0/1/2/3/S/T*	E	2792	AYL	A	+/-	06/03 ▸	251919501D	●**700036**	20	
1.9 TDi *7M6/0/1/2/3/S/T*	D	1896	ANU,ASZ,AUY,BTB	M	+/-	06/03 ▸	251919501D	●**700036**	20	
1.9 TDi *7M6/0/1/2/3/S*	D	1896	AUY	A	+/-	06/03 ▸ 05/06	251919501D	●**700036**	20	
Vento										
1.4 i *1H2/2/3/B*	E	1390	AEX	M	+/-	07/95 ▸ 12/97	6U0919501B	**700012**		20
1.4 i *1H2/2/3*	E	1391	ABD	M	+/-	11/91 ▸ 07/95	6U0919501B	**700012**		20
1.6 i *1H2/2/3/4/5/B*	E	1598	AEK, AKS, ABU, AFT, AEE, AEA	M	+/-	07/92 ▸ 12/97	6U0919501B	**700012**		20
1.6 i *1H2/2/3/4/B*	E	1598	AFT, AEK	A	+/-	10/94 ▸ 12/97	6U0919501B	**700012**		20
1.8 i *1H2/2/3/4/5*	E	1781	ABS, AAM	M	+/-	11/91 ▸ 12/97	6U0919501B	**700012**		20
1.8 i *1H2/2/3/4*	E	1781	AAM, ABS	A	+/-	01/92 ▸ 12/97	6U0919501B	**700012**		20
1.8 i *1H33, 1H2/2/3/4/5*	E	1781	ADZ	M	+/-	09/94 ▸ 12/97	251919501D	●**700036**	20	
1.8 i *1H2/2/3/4*	E	1781	ADZ	A	+/-	09/94 ▸ 12/97	251919501D	●**700036**	20	
2.0 E *1H2/2/3/4/5*	E	1984	2E, AKR, AGG, AEP	M	+/-	11/91 ▸ 12/97	6U0919501B	**700012**		20
2.0 E *1H2/2/3/4*	E	1984	2E, AGG, AEP	A	+/-	11/91 ▸ 12/97	6U0919501B	**700012**		20
2.0 E *1H2/2/4/5*	E	1984	ADY	M	+/-	10/94 ▸ 04/96	251919501D	●**700036**	20	
2.0 E *1H24*	E	1984	ADY	A	+/-	07/95 ▸ 04/96	251919501D	●**700036**	20	
1.9 D,1.9 TD *1H2/2/3/4/5*	D	1896	AAZ, 1Y	M	+/-	11/91 ▸ 12/97	357919501	**700013**		20
1.9 SDi,1.9 TDi *1H2/2/3/4/5/B*	D	1896	AEY, AFN, AHU, ALE, 1Z	M	+/-	08/93 ▸ 12/97	6U0919501B	**700012**		20
1.9 TDi *1H2/2/3/4/5/B*	D	1896	1Z	M		08/93 ▸ 07/96	025906041	**700019**	12X1.5	19
1.9 TD *1H2/2/3*	D	1896	AAZ	A	+/-	01/92 ▸ 07/93	357919501	**700013**		20
1.9 TDi *1H2/2/3/4/B*	D	1896	AFN, AHU, 1Z	A	+/-	09/93 ▸ 12/97	6U0919501B	**700012**		20
1.9 TDi *1H2/2/3/4/B*	D	1896	1Z	A		09/93 ▸ 07/96	025906041	**700019**	12X1.5	19
1.9 TD,1.9 TDi *1H2/2/3/4/5/B*	D	1896	1Z,AAZ,AFN,AHU,ALE	M	+/-	11/91 ▸ 12/97	251919501D	●**700036**	20	
1.9 TD,1.9 TDi *1H2/2/3/4/B*	D	1896	1Z,AAZ,AFN,AHU	A	+/-	01/92 ▸ 12/97	251919501D	●**700036**	20	

• **New** Nouveau **Nuevo** Novo **Nuovo** Nieuw **Neu** **Yeni** Новый Nou

VOLKSWAGEN (.../...)

Caddy (82>92) (.../...)

1.5	147/0/7/8/9, 148/0/7/8/9	E	1457	JB	M			08/82 ▸ 07/83	025906041A	**700011**		20
1.6	147/0/7/8/9	E	1588	EM	M			08/82 ▸ 07/83	025906041A	**700011**		20
1.6	147/0/7/8/9	E	1588	EM	A			08/82 ▸ 07/83	025906041A	**700011**		20
1.6	147/0/7/8/9, 1AE1, 148/0/7/8/9	E	1595	HN, EW	M			08/83 ▸ 07/92	025906041A	**700011**		20
1.6	147/0/7/8, 1AE1, 148/0/7/8	E	1595	EW, HN	A			08/83 ▸ 07/92	025906041A	**700011**		20
1.8 i	147/0/7/8, 1AE1, 148/0/7/8	E	1781	JH	M			08/85 ▸ 07/92	025906041A	**700011**		20
1.8 i	147/0/7/8, 1AE1, 148/0/7/8	E	1781	JH	A			08/85 ▸ 07/92	025906041A	**700011**		20
1.6 D	147/0/7/8/9, 1AE1, 148/0/7/8/9	D	1588	ME, JK	M			08/82 ▸ 07/92	025906041A	**700011**		20

Caddy (95>2004)

1.4 i	9K9/A/B	E	1390	APQ, AEX, AKV	M	+/-		11/95 ▸ 06/03	6U0919501B	**700012**		20
1.4 i,1.4 i 16V	9K9/A/B	E	1390	AEX, APQ, AUA, AKV, AUD	M			11/95 ▸ 06/03	025906041A	**700011**		20
1.6 i	9K9/A/B	E	1595	1F	M	+/-		11/95 ▸ 05/97	6U0919501B	**700012**		20
1.6 i	9K9/A/B	E	1595	1F	M			11/95 ▸ 05/97	025906041A	**700011**		20
1.6 i	9U71, 9K9/A/B	E	1598	AEE	M	+/-		06/96 ▸ 12/00	6U0919501B	**700012**		20
1.6 i	9U71, 9K9/A/B	E	1598	AEE	M			06/96 ▸ 12/00	025906041A	**700011**		20
1.6 i	9U71, 9K9/A/B	E	1598	AEE	M			06/96 ▸ 12/00	6U0919501	**700019**	12X1.5	19
1.7 SDi	9K9/A/B	D	1716	AHB	M	+/-		07/96 ▸ 09/00	6U0919501B	**700012**		20
1.9 SDi,1.9 TDi	9K9/A/B	D	1896	AHU, ALE, AEY, 1Z	M	+/-		11/95 ▸ 09/00	6U0919501B	**700012**		20
1.9 D	9U71, 9K9/A/B	D	1896	1Y, AEF	M	+/-		11/95 ▸ 06/03	357919501	**700013**		20
1.9 D	9U71	D	1896	AEF	M			06/96 ▸ 12/00	6U0919501	**700019**	12X1.5	19

LT (75>96)

2.4 i	2916, 2934, 2951, 2968, 281/G/K	E	2383	1E	M			08/88 ▸ 07/89	025906041A	**700011**		20
2.4 D,2.4 TD	21D4, 21A/0/1, 21G3, 21F 6/7, 21K/7/8	D	2383	ACL, ACT	M			08/92 ▸ 12/95	357919501	**700013**		20

LT II (96>2003)

2.8 TD	2DA/0/1, 2DB/0/1, 2DC/0/1 2DD/0/1/2, 2DE/0/1, 2DF 0/1/2, 2DG/0/1/2, 2DK1 2DH/1/2, 2DL/1/2, 2DM/1 2	D	2798	AGK, ATA	M	-		07/96 ▸	062919501	**700050**	14X1.5	19
2.8 TD,2.8 TDI	2DA/0/1, 2DB/0/1, 2DC/0/1 2DD/0/1/2, 2DE/0/1, 2DF 0/1/2, 2DG/0/1/2, 2DK1 2DH/1/2, 2DM1, 2DL/1/2	D	2799	AUH, BCQ	M	+/-		02/02 ▸ 05/03	062919501	**700050**	14X1.5	19

LT III (2003>)

2.8 TDi	2DA/0/1, 2DB/0/1, 2DC/0/1 2DD/0/1/2, 2DE/0/1, 2DF 0/1/2, 2DG/0/1/2, 2DK1 2DH/1/2, 2DL/1/2, 2DM/1 2	D	2799	AUH, BCQ	M			06/03 ▸	062919501	**700050**	14X1.5	19

Taro

1.8 ▸ 7AM9500000	7AE/1/2, 7AX/2/3	E	1812	2Y	M	-		02/89 ▸ 08/91	J8342020020	**700006**	16X1.5	17
2.2 ▸ 7AM9500000	7AE/1/2, 7AX/2/3	E	2236	4Y	M	-		06/89 ▸ 08/91	J8342020020	**700006**	16X1.5	17
2.4 i ▸ 7AM9500000	7AE/1/2, 7AG/1/3, 7AX/2/3	E	2366	22R-EC	M	-		06/89 ▸ 08/91	J8342020020	**700006**	16X1.5	17
2.4 D ▸ 7AM9500000	7AE/1/2, 7AG/1/2/3, 7AX/2/3	D	2446	2L	M	-		02/89 ▸ 08/91	J8342020020	**700006**	16X1.5	17

Transporter (F24) (79>92)

1.6	245/0/1, 246/0/1, 247/0/3, 2510 2520, 248/0/3, 253/0/1/2/3/4/5/9 254/0/2/3/5/9, 255/0/1/2/3/5, 256 0/2/3/5	E	1584	CT	M			05/79 ▸ 12/82	251919501	**700044**	20	

• **New** Nouveau **Nuevo** Novo **Nuovo** Nieuw **Neu** **Yeni** Новый Nou

			cc		AC			OE	Valeo	COD.	mm

VOLKSWAGEN (.../...)

Transporter (F24) (79>92) (.../...)

1.9	*245/0/1/G/H, 246/0/1, 247/0/3/A/G/K 248/0/3, 251/0/G/H, 252/0/D, 253/0 1/2/3/4/5/9/G/H/J/K/L/M/O/S/T, 254 0/2/3/4/5/9/D/F, 255/0/1/2/3/4/5/6 G/H/J/K/L/M/N/S/T, 256/0/1/2/3/4/5 E/F*	E	1915	DG, GW, DH, DF, SP	M			08/82 ▸ 07/92	251919501	**700044**	20	
1.9	*245/0/1/G/H, 246/0/1, 247/0/3/G/K 248/0/3, 251/0/G, 252/0/D, 253/0/1 2/3/4/5/9/G/H/J/K/L/M, 254/0/2/3/5 9/D/F, 255/0/1/2/4/5/6/G/H/J/K/L/M N, 256/0/2/3/4/E/F*	E	1915	DG, DH, GW	A	+/-		08/82 ▸ 07/92	251919501	**700044**	20	
1.9	*2460, 245/0, 247/0/3/A, 2510, 2520 248/0/3, 253/1/2/3/4/5/9/0/S/T 254/0/2/3/4/5/9, 255/1/2/3/4/5 256/0/1/2/3/4/5*	E	1915	DG	M	+/-		08/82 ▸ 07/92	251919501D	●**700036**	20	
2.0	*245/0/1, 2470, 246/0/1, 2510, 2520 248/0/3, 253/0/1/2/3/4/5/9, 254/0 2/3/5/9, 255/0/1/2/3/5, 256/0/2/3/5*	E	1970	CV, CU	M	+/-		05/79 ▸ 12/82	251919501	**700044**	20	
2.0	*245/0/1, 2470, 246/0/1, 2510, 2520 248/0/3, 253/0/1/2/3/4/5/9, 254/0 2/3/5/9, 255/0/1/2/3/5, 256/0/2/3/5*	E	1970	CU, CV	A			05/79 ▸ 12/82	251919501	**700044**	20	
2.1	*245/0, 246/0/F/G, 247/0/3/A/C/G/K 248/0/A/G/K, 251/0/G, 252/0/G, 253 0/1/2/3/4/5/9/F/G/H/J/K/L/M/P/S/T 254/0/3/5/C/D/F/G/L/M, 255/0/1/2/3 4/5/6/F/G/H/J/K/L/M/N, 256/0/2/3/4 5/E/F/G/K/L*	E	2109	MV, DJ	M			08/84 ▸ 07/92	251919501	**700044**	20	
2.1	*245/0, 246/0/F/G, 247/0/3/A/C/G/K 248/0/A/G/K, 251/0/G, 252/0/G, 253 0/1/2/3/4/5/9/F/G/H/J/K/L/M/P/S/T 254/0/3/5/C/D/F/G/L/M, 255/0/1/2/3 4/5/6/F/G/H/J/K/L/M/N, 256/0/2/3/4 5/E/F/G/K/L*	E	2109	DJ,MV	M	+/-		08/85 ▸ 07/92	251919501D	●**700036**	20	
1.6 D,1.6 TD	*245/0/1, 246/0/1, 247/0/3 A, 2510, 2520, 248/0/3/A 253/0/1/2/3/4/5/7/9/S/T 254/0/2/3/5/9, 255/0/1/2 3/4/5/S/T, 256/0/2/3/4/5*	D	1588	JX, CS	M	+/-		05/79 ▸ 07/92	251919501	**700044**	20	
1.6 TD	*2556*	D	1588	JX	A	+/-		08/84 ▸ 07/85	251919501	**700044**	20	
1.6 TD	*2460, 245/0, 247/0/3/A 2510, 2520, 248/3/A, 253 0/1/2/3/4/5/7/9/S/T, 254 0/2/3/5, 255/0/1/2/3/4/5 256/0/2/3/5*	D	1588	JX	M	+/-		02/85 ▸ 07/92	251919501D	●**700036**	20	
1.8 D	*245/0/1, 246/0/1, 247/0/3, 2510 2520, 248/0/3, 253/1/2/3/4/5/9 254/0/2/3/5/6, 255/0/1/2/3/5, 256 0/2/3/5*	D	1715	KY	M			08/84 ▸ 07/92	251919501	**700044**	20	

Transporter (F70) (90>96)

1.9 D,1.9 TD	*70A/1, 70B/1/C/K/M/T 70E1, 70H1, 70C/2/3, 70J 1/C/K/M/T/W, 70L1, 70M1 70K/2/3*	D	1896	1X,ABL	M	+/-		09/90 ▸ 12/95	251919501D	●**700036**	20	
2.4 D	*70A/1, 70B/1/C/K/M/T, 70E1, 70H1 70C/2/3, 70J/1/C/K/T/W, 70L1, 70M1 70K/2/3/K*	D	2370	AAB	M			09/90 ▸ 05/96	251919501D	●**700036**	20	
2.4 D	*70A/1, 70B/1/K/M/T, 70E1, 70H1, 70C 2/3, 70J/1/C/K/M/T/W, 70L1, 70M1 70K/2/3*	D	2370	AAB	A			05/92 ▸ 12/95	251919501D	●**700036**	20	

Transporter (F7D) (96>2003)

2.0 i	*7DA/1, 7DB/1/K, 7DE1, 7DH1, 7DC/2/3 A/G/M/T/U, 7DJ/1/K, 7DL1, 7DM1, 7DK 2/3/M/W*	E	1968	AAC	M	+/-		01/96 ▸ 06/03	025906041A	**700011**		20

• **New** Nouveau **Nuevo** Novo **Nuovo** Nieuw **Neu** **Yeni** Новый Nou

VOLKSWAGEN (.../...)

Transporter (F7D) (96>2003) (.../...)

2.5 i	7DA/1, 7DB/1/K, 7DE1, 7DH1, 7DC/2/M T/U, 7DJ/1/K, 7DL1, 7DM1, 7DK/2/J/T	E	2460	APL, AVT, AET, AEU	M	+/-		05/97 ▸ 06/03	6U0919501B	**700012**		20
2.5 i	7DA/1, 7DB/1/K, 7DE1, 7DH1, 7DC/2/M T/U, 7DJ/1/K, 7DL1, 7DM1, 7DK/2/T	E	2460	APL, AVT, AEU, AET	A	+/-		05/97 ▸ 06/03	6U0919501B	**700012**		20
2.5 i ▸ 70-X-080 000	7DA/1, 7DB/1/K, 7DE1, 7DH1, 7DC/1/2 3/A/G/M/T/U, 7DJ/1/K, 7DL1, 7DM1 7DK/2/3/T/W	E	2460	AET, ACU, AEU	M	+/-		01/96 ▸ 06/03	025906041A	**700011**		20
2.5 i ▸ 70-X-080 000	7DA/1, 7DB/1/K, 7DE1, 7DH1, 7DC/2/3 A/G/M/T/U, 7DJ/1/K, 7DL1, 7DM1, 7DK 2/3/T/W	E	2460	AET, ACU, AEU	A	+/-		01/96 ▸ 06/03	025906041A	**700011**		20
2.5 i	7DC/2/3/A/M/T, 7DK/2/3/T/W	E	2460	ACU	M	+		01/96 ▸ 06/03	251919501D	•**700036**	20	
2.5 i	7DA/1, 7DB/1/K, 7DE1, 7DH1, 7DC/2/3 M/T/U, 7DJ/1/K, 7DL1, 7DM1, 7DK/2/T	E	2460	AET,AEU	M			08/96 ▸ 06/03	251919501D	•**700036**	20	
2.5 i	7DC/2/3/A/M/T, 7DK/2/3/T/W	E	2460	ACU	A	+		01/96 ▸ 10/96	251919501D	•**700036**	20	
2.5 i	7DA/1, 7DB/1/K, 7DE1, 7DH1, 7DC/2/3 M/T/U, 7DJ/1/K, 7DL1, 7DM1, 7DK/2/T	E	2460	AET,AEU	A			05/96 ▸ 06/03	251919501D	•**700036**	20	
2.8 i VR6 70-V-006 391 ▸	7DA/1, 7DB/1/K, 7DE1 7DH1, 7DC/2/M/T/U, 7DJ/1 K, 7DL1, 7DM1, 7DK/2/M/T	E	2792	AES	M			05/96 ▸ 06/03	357919501A	**700012**		20
2.8 i VR6 70-V-006 391 ▸	7DA/1, 7DB/1/K, 7DE1 7DH1, 7DC/2/M/T/U, 7DJ/1 K, 7DL1, 7DM1, 7DK/2/M/T	E	2792	AES	A			05/96 ▸ 06/03	357919501A	**700012**		20
2.8 i VR6 ▸ 70-v-006 390	7DA/1, 7DB/1/K, 7DE1 7DH1, 7DC/2/3/A/G/M/T 7DJ/1/K, 7DL1, 7DM1, 7DK 2/3/M/W	E	2792	AES	M	+/-		01/96 ▸ 10/96	025906041A	**700011**		20
2.8 i VR6 ▸ 70-v-006 390	7DA/1, 7DB/1/K, 7DE1 7DH1, 7DC/2/3/A/G/M/T 7DJ/1/K, 7DL1, 7DM1, 7DK 2/3/M/W	E	2792	AES	A	+/-		01/96 ▸ 10/96	025906041A	**700011**		20
2.8 i VR6	7DA/1, 7DB/1/K, 7DE1 7DH1, 7DC/2/3/A/G/M/T/U 7DJ/1/K, 7DL1, 7DM1, 7DK 2/3/M/T/W	E	2792	AES	M			01/96 ▸ 06/03	251919501D	•**700036**	20	
2.8 i V6 24V,2.8 i VR6	7DA/1, 7DB/1/K, 7DE1 7DH1, 7DC/2/3/A/G/M/T/U 7DJ/1/K, 7DL1, 7DM1, 7DK 2/3/M/T/W	E	2792	AES,AMV	A			01/96 ▸ 06/03	251919501D	•**700036**	20	
1.9 TD	7DA/1, 7DB/1/K, 7DE1 7DH1, 7DC/2/3/A/G/M/T/U 7DJ/1/K, 7DL1, 7DM1, 7DK 2/3/M/T/W	D	1896	ABL	M	+/-		01/96 ▸ 06/03	251919501D	•**700036**	20	
2.4 D	7DA/1, 7DB/1/K, 7DE1, 7DH1, 7DC/2/3 M/T/U, 7DJ/1/K, 7DL1, 7DM1, 7DK/2/T	D	2370	AAB	M	+/-		05/96 ▸ 09/98	6U0919501B	**700012**		20
2.4 D	7DA/1, 7DB/1/K, 7DE1, 7DH1, 7DC/2/3 M/T/U, 7DJ/1/K, 7DL1, 7DM1, 7DK/2/T	D	2370	AAB	A	+/-		05/96 ▸ 09/98	6U0919501B	**700012**		20
2.4 D ▸ 70-X-053 924	7DA/1, 7DB/1/K, 7DE1, 7DH1, 7DC/2/3 A/G/M/T/U, 7DJ/1/K, 7DL1, 7DM1, 7DK 2/3/T/W	D	2370	AAB,AJA	M			01/96 ▸ 06/03	251919501D	•**700036**	20	
2.4 D ▸ 70-X-053 924	7DA/1, 7DB/1/K, 7DE1, 7DH1, 7DC/2/3 A/G/M/T/U, 7DJ/1/K, 7DL1, 7DM1, 7DK 2/3/T/W	D	2370	AAB,AJA	A			01/96 ▸ 09/98	251919501D	•**700036**	20	
2.5 TDi 70-X-053 925 ▸	7DA/1, 7DB/1/K, 7DE1 7DH1, 7DC/1/2/M/T/U, 7DJ 1/K, 7DL1, 7DM1, 7DK/2/T	D	2460	ACV, AHY	M	+/-		05/98 ▸ 06/03	6U0919501B	**700012**		20
2.5 TDi	7DA/1, 7DB/1/K, 7DE1 7DH1, 7DC/2/M/T/U, 7DJ/1 K, 7DL1, 7DM1, 7DK/2/T	D	2460	ACV	M	+/-		05/98 ▸ 06/03	357919501	**700013**		20
2.5 DTi,2.5 TDi	7DA/1, 7DB/1/K, 7DH1, 7DC 2/M/T/U, 7DJ/1/K, 7DL1 7DM1, 7DK/2/T	D	2460	ACV	A	+/-		05/97 ▸ 06/03	357919501	**700013**		20

• **New** Nouveau **Nuevo** Novo **Nuovo** Nieuw **Neu** **Yeni** Новый Nou

Valeo

Water temperature sensor
Sonde à thermistance
Sensor de temperatura de água
Sensor de temperatura de água
Sensore temperatura acqua
Watertemperatuursensor
Wassertemperaturfühler

Czujnik temperatury wody
Snímač teploty vody
Comutator de temperatură
Su sicklik sensörü
датчик температуры воды

Type Ctr.	cc		AC		2 3	OE	Valeo	COD.	mm
VOLKSWAGEN (.../...)									
Transporter (F7D) (96>2003) (.../...)									
2.5 TDi *7DA/1, 7DB/1/K, 7DE1 7DH1, 7DC/2/M/T/U, 7DJ/1 K, 7DL1, 7DM1, 7DK/2/T*	D	2460	AUF, ACV	A	+/-		05/98 ▸ 06/03	6U0919501B	**700012**		20
2.5 TDi ▸ 70-X-053 294 *7DA/1, 7DB/1/K, 7DE1 7DH1, 7DC/1/2/3/A/G/M/T U, 7DJ/1/K, 7DL1, 7DM1 7DK/2/3/T/W*	D	2460	ACV	M	+/-		01/96 ▸ 10/98	025906041A	**700011**		20
2.5 DTi,2.5 TDi ▸ 70-X-053 294 *7DA/1, 7DB/1/K, 7DE1 7DH1, 7DC/2/M/T/U, 7DJ/1 K, 7DL1, 7DM1, 7DK/2/T*	D	2460	ACV	A	+/-		01/96 ▸ 10/98	025906041A	**700011**		20
2.5 TDi *7DA/1, 7DB/1/K, 7DE1 7DH1, 7DC/1/2/3/A/G/M/T U, 7DJ/1/K, 7DL1, 7DM1 7DK/2/3/T/W*	D	2460	ACV	M			01/96 ▸ 06/03	251919501D	●**700036**	20	
2.5 DTi,2.5 TDi *7DA/1, 7DB/1/K, 7DE1 7DH1, 7DC/2/M/T/U, 7DJ/1 K, 7DL1, 7DM1, 7DK/2/T*	D	2460	ACV	A			01/96 ▸ 06/03	251919501D	●**700036**	20	
2.5 TDi *7DA/1, 7DB/1/K, 7DE1 7DH1, 7DC/2/M/T/U, 7DJ/1 K, 7DL1, 7DM1, 7DK/2/T*	D	2461	AJT	M	+/-		05/98 ▸ 06/03	6U0919501B	**700012**		20
VOLVO									
S40									
1,6 i	E	1588	B 4164 S	M			07/95 ▸ 08/99	9186486	●**700037**	10X1.0	19
1.8 i	E	1731	B 4184 S, B 4184 S3	M			07/95 ▸ 08/99	9186486	●**700037**	10X1.0	19
2.0 i	E	1948	B 4204 S	M			07/95 ▸ 08/99	9186486	●**700037**	10X1.0	19
V40									
1,6 i	E	1588	B 4164 S	M			07/95 ▸ 08/99	9186486	●**700037**	10X1.0	19
1.8 i	E	1731	B 4184 S, B 4184 S3	M			07/95 ▸ 08/99	9186486	●**700037**	10X1.0	19
2.0 i	E	1948	B 4204 S	M			07/95 ▸ 08/99	9186486	●**700037**	10X1.0	19
C70									
2.0 i	E	1984	B 5204 T2	M			03/97 ▸ 09/02	9186486	●**700037**	10X1.0	19
2.3 i	E	2319	B 5234 T3	M			03/97 ▸ 09/02	9186486	●**700037**	10X1.0	19
S70									
2.0 i	E	1984	B 5202 S, B 5204 T2	M			01/97 ▸ 11/00	9186486	●**700037**	10X1.0	19
2.3 i	E	2319	B 5234 T3	M			01/97 ▸ 11/00	9186486	●**700037**	10X1.0	19
2.4 i	E	2319	B 5244 S	M			01/97 ▸ 11/00	9186486	●**700037**	10X1.0	19
2.5 i	E	2435	B 5252 S	M			01/97 ▸ 11/00	9186486	●**700037**	10X1.0	19
2.5 TDI	D	2461	D 5252 T	M			01/97 ▸ 11/00	9186486	●**700037**	10X1.0	19
V70									
2.0 i	E	1984	B 5204 T2	M			01/97 ▸ 03/00	9186486	●**700037**	10X1.0	19
2.3 i	E	2319	B 5234 T3	M			01/97 ▸ 03/00	9186486	●**700037**	10X1.0	19
2.4 i	E	2319	B 5244 S2, B 5244 SG2	M			01/97 ▸ 03/00	9186486	●**700037**	10X1.0	19
2.5 i	E	2435	B 5254 S	M			01/97 ▸ 03/00	9186486	●**700037**	10X1.0	19
2.5 TDI	D	2461	D 5252 T	M			01/97 ▸ 05/00	9186486	●**700037**	10X1.0	19
S90									
2.9 i	E	2922	B 6304 S2, B 6304 G	M			01/97 ▸ 05/98	9186486	●**700037**	10X1.0	19
V90									
2.9 i	E	2922	B 6304 S2, B 6304 G	M			01/97 ▸ 12/98	9186486	●**700037**	10X1.0	19

• **New** Nouveau **Nuevo** Novo **Nuovo** Nieuw **Neu** **Yeni** Новый Nou

EXHAUST GAS RECIRCULATION [EGR] VALVE

VANNE EGR / VALVULA EGR / VALVOLE EGR / ABGASRÜCKFÜHRUNGS [AGR] VENTIL

VALEO PRODUCT CHARACTERISTICS

Caractéristiques du produit Valeo / Características del producto Valeo / Caratteristiche del prodotto Valeo / Valeo Produktmerkmale

EGR VALVE BODIES

Corps de la vanne EGR / Cuerpos de valvula EGR / Corpi di valvole EGR / AGR Ventilkörper

PNEUMATIC CONTROL [P]

Commande pneumatique [P] /
Mando neumático [P] /
Comando pneumatico [P] /
Pneumatische Steuerungr [P]

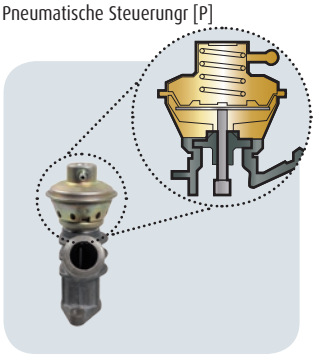

Pneaumatic

- FR Pneumatique
- SP Neumático
- IT Pneumatica
- DE Pneumatische

ELECTRICAL CONTROL [ELEC]

Contrôle électrique [ELEC] / Mando eléctrico [ELEC] /
Comando elettrico [ELEC] / Elektrische Steuerung [ELEC]

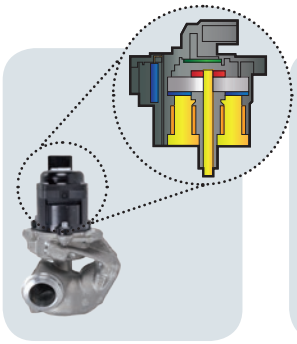

Limited angle Torque motor

- FR Moteur à butée angulaire
- SP Motor con tope angular
- IT Motore di arresto angolare
- DE Motor mit Drehwinkelbegrenzung

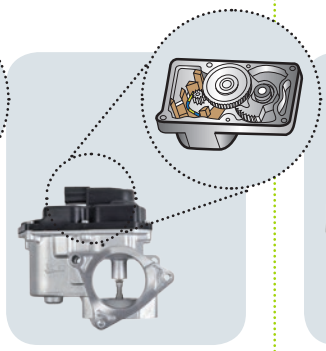

DC motor

- FR Moteur à courant continu
- SP Motor de corriente continua
- IT Motore a corriente continua
- DE Gleichstrommotor

INTEGRATED EGR VALVE IN MODULES

Vanne EGR intégré dans des modules /
Valvula EGR integrada en modulos /
Valvola EGR integrata in moduli /
Integriertes AGR-ventil in Modulen

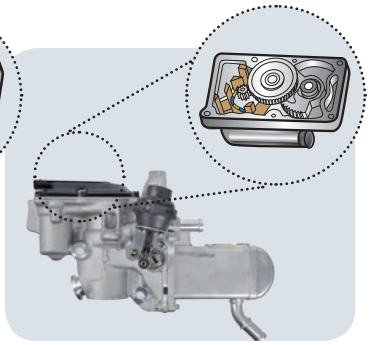

Water cooled DC motor

- FR Moteur à courant continu refroidi par eau
- SP Motor de corriente continua enfriada por agua
- IT Motore a corriente continua reffredato con acqua
- DE Wassergekühlter Gleichstrommotor

POSITION IN VEHICLE

Position dans le véhicule / Posición en vehículo / Posizione nel veicolo / Position Im Fahrzeug

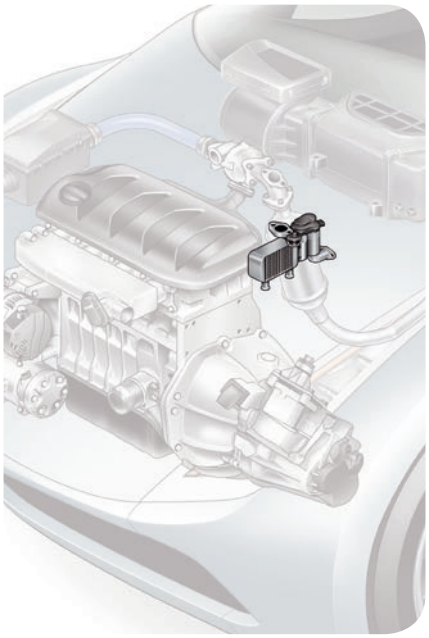

- EN The EGR valve is mounted in the engine block and after the exhaust manifold
- FR La vanne EGR est montée dans le bloc moteur et après le collecteur d'échappement
- SP La válvula EGR está montada en el colector de escape de motor
- IT La valvola EGR è montata nel blocco motore e dopo aver il collettore di scarico
- DE Das AGR-Ventil ist am Motorblock verbaut, nach den Abgaskrümmer

INTERFACE

Interface / Interfaz / Interfaccia / Schnittstelle

CONNECTOR (NUMBER OF PINS)

- FR Connecteur (Nombre de broches)
- SP Conector (Numéro de contactos)
- IT Connettore (Numero di pin)
- DE Anschluss (Anzahl der Pins)

ACCESSORIES

OF PRODUCT FOR MOUNTING*

Accessoires de produit pour le montage* /
Accesorios del producto para el montaje* /
Accessori del prodotto per il montaggio* /
Zubehör für den Einbau des Produkts*

- EN * There are several configurations in the range
- FR * Il existe plusieurs configurations dans l'offre
- SP * Existen varias configuraciones en la gama
- IT * Non tutti i riferimenti possono avere gli accessori, così come indicato nell'immagine
- DE * Mehrere Konfigurationen Werden Angeboten

5

Valeo

Valeo

Type Ctr.	cc					OE	Valeo	TYPE
AUDI								
A3 (2008>2010)								
2.0 TDi 16V *8P1/A/B/C, 8PA/A/B/C*	D	1968	CBAA/F,CBAB/F,CBBB/F	M	Y	Euro 5	09/08 ▸ 05/10	03L131501K	**700424**	ELEC
2.0 TDi 16V *8P1/A/B/C, 8PA/A/B/C*	D	1968	CBAA/F,CBAB/F,CBBB/F	A	Y	Euro 5	09/08 ▸ 05/10	03L131501K	**700424**	ELEC
A3 Cabriolet (2008>2010)								
2.0 TDi 16V *8P7A, 6P7/A/B*	D	1968	CBAA/F,CBAB/F	M	Y	Euro 5	09/08 ▸ 05/10	03L131501K	**700424**	ELEC
2.0 TDi 16V *6P7/A/B*	D	1968	CBAA/F,CBAB/F	A	Y	Euro 5	09/08 ▸ 05/10	03L131501K	**700424**	ELEC
A4 (2007>)								
2.0 TDi 16V	D	1968		M	▲	Euro 4	11/07 ▸ 12/09	03L131512AQ	**700439**	E MODULE EGR
2.0 TDi 16V *8K20, 8K50*	D	1968	CGLC, CGLD, CJCA, CJCB, CJCC CMFA,	M	▲	Euro 5	01/10 ▸	03L131512CD	**700436**	E MODULE EGR
A4 (2007>2011)								
2.0 TDi 16V *8K20, 8K50*	D	1968	CAGA/F,CAGB/F,CAGC/F,CAHA/F,CAHB/F	M	Y	Euro 5	11/07 ▸ 11/11	03L131501K	**700424**	ELEC
2.0 TDi 16V *8K20, 8K50*	D	1968	CAGA/F,CAGB/F	A	Y	Euro 5	11/07 ▸ 11/11	03L131501K	**700424**	ELEC
3.0 TDi V6 24V *8K50*	D	2967	CAPA	A	Y	Euro 5	11/07 ▸ 11/11	03L131501K	**700424**	ELEC
A5								
2.0 TDi 16V *8TA00H*	D	1968	CMEA	A	Y	Euro 5	05/10 ▸	03L131501G	**700424**	ELEC
A5 Cabriolet								
2.0 TDI *8F70ZC, 8F70RC, 8TA00H*	D	1968	CAHA/F,CAHB/F	M	Y	Euro 5	05/09 ▸	03L131501K	**700424**	ELEC
A6								
2.0 TDI 16V *4G20HH, 4G50HH, 4G20TH 4G50TH,*	D	1968	CGLC,CGLD	A	▲	Euro 5	05/11 ▸	03L131512BQ	**700436**	E MODULE EGR
2.0 TDI 16V *4G50HC, 4G20TC, 4G50TC 4G20HC*	D	1968	CGLC,CGLD	M	▲	Euro 5	02/11 ▸	03L131512BQ	**700436**	E MODULE EGR
Q5 (2008>2010)								
2.0 TDI 16V *8RB0*	D	1968	CAHA/F,CAHB/F	M	Y	Euro 5	11/08 ▸ 05/10	03L131501K	**700424**	ELEC
2.0 TDI 16V *8RB0*	D	1968	CAHA/F,CAHB/F	A	Y	Euro 5	11/08 ▸ 05/10	03L131501K	**700424**	ELEC
Q5 (2010>)								
2.0 TDi 16V	D	1968		M	▲	Euro 5	01/10 ▸	03L131512BN	**700438**	E MODULE EGR
2.0 TDI 16V *8RB0*	D	1968	CGLA,CGLB,CMGA	A	▲	Euro 5	09/10 ▸ 09/11	03L131512CD	**700436**	E MODULE EGR
2.0 TDI 136 16V 2.0 TDI 143 16V 2.0 TDI 16V *8RB0*	D	1968	CGLA,CGLB,CJCA,CJCB	M	▲	Euro 5	05/10 ▸ 09/11	03L131512CD	**700436**	E MODULE EGR
TT (2006>)								
2.0 TDI 16V *8J30, 8J90*	D	1968	CBBB/F	M	Y	Euro 5	11/10 ▸	03L131501K	**700424**	ELEC
CITROËN								
C1								
1.4 HDi *PM8HTC, PN8HTC*	D	1398	DV4TD	M	▲	Euro 4	06/05 ▸	1618PF	**700413**	ELEC
C2								
1.4 HDi *JG8/HXB/HZC, JM8/HXB/HZC*	D	1398	DV4TD	M	▲	Euro 4	09/03 ▸	1618PF	**700413**	ELEC
1.6 HDi 16V *JM9HZC*	D	1560	DV6TED4	M	▲	Euro 4	11/05 ▸ 01/10	1618NR	**700414**	ELEC
C3 (2002>2005)								
1.4 HDi 16V *FN8HYB, FR8HYB, FC8/HYB*	D	1398	DV4TED4	M	▲	Euro 3	04/02 ▸ 10/05	1628XV	**700407**	P
1.4 HDi *FN8HZB, FR8XZB, FC8/HZ HZB*	D	1399	DV4TD	M	▲	Euro 3	04/02 ▸ 10/05	1628XV	**700407**	P
1.6 HDi 16V *FC9HXC*	D	1560	DV6ATED4	M	▲	Euro 4	06/05 ▸ 10/05	1618NR	**700414**	ELEC
C3 (2005>)								
1.4 HDi *FC8HZC*	D	1398	DV4TD	M	▲	Euro 4	11/05 ▸	1618PF	**700413**	ELEC
1.6 HDi 16V *FC9/HXC/HZC*	D	1560	DV6ATED4, DV6TED4	M	▲	Euro 4	11/05 ▸	1618NR	**700414**	ELEC

• **New** Nouveau **Nuevo** Novo **Nuovo** Nieuw **Neu** Yeni Новый Nou

										Valeo	TYPE ▸
CITROËN (.../...)											
C3 Picasso											
1.6 HDi 110 16V 1.6 HDi 90 16V	*SH9HZC, SH9HXC*	D	1560	DV6ATED4,DV6TED4	M	▲	Euro 4	02/09 ▸	1618NR	**700414**	ELEC
C3 Pluriel											
1.4 HDi	*HB8HZB*	D	1399	DV4TD	M	▲	Euro 3	02/04 ▸	1628XV	**700407**	P
C4											
1.6 HDi 16V	*LA9/HXC/HYB/HZC, LC9/HXC HYB/HZC, LG9/HXC/HZC*	D	1560	DV6TED4, DV6ATED4	M	▲	Euro 4	11/04 ▸	1618NR	**700414**	ELEC
2.0 Hdi 16V	*NCRHE8*	D	1997	DW10CTED4	M	N	Euro 5	09/10 ▸ 10/11	1618NQ	**700434**	E MODULE EGR
2.0 HDi	*LDRHZ*	D	1997	DW10ATED	M	N	Euro 3	02/07 ▸ 12/10	1628JZ	**700405**	P
2.0 HDi 150 16V	*NCRHE8*	D	1997	DW10CTED4	M	Y	Euro 5	10/11 ▸	9678257280	●**700451**	E MODULE EGR
C4 Picasso											
1.6 HDi 16V	*UA9/HZC/HZH, UD9/HZC/HZH*	D	1560	DV6TED4	M	▲	Euro 4	09/06 ▸	1618NR	**700414**	ELEC
2.0 HDi 16V	*UAR/HE/HE8, UDR/HE/HE8*	D	1997	DW10CTED4	M	Y	Euro 5	10/11 ▸	9678257280	●**700451**	E MODULE EGR
2.0 HDi 160 16V	*UARHH, UDRHH*	D	1997	DW10CTED4	A	Y	Euro 5	10/11 ▸	9678257280	●**700451**	E MODULE EGR
C5 (2001>2004)											
2.0 HDi	*DERHZE, DCRHZE, DERHZF DCRHZF*	D	1997	DW10ATED	A	N	Euro 3	02/01 ▸ 08/04	1628JZ	**700405**	P
2.0 HDi	*DCRHZB, DERHZB, DERHYB DCRHSB, DCRHYB*	D	1997	DW10ATED,DW10TD	M	N	Euro 3	02/01 ▸ 08/04	1628JZ	**700405**	P
2.0 HPi 16V	*DCRLZB, DERLZB, DERLZC*	E	1997	EW10D	M	N	Euro 4	02/01 ▸ 08/04	1628WR	**700408**	ELEC
C5 (2004>2007)											
1.6 HDi 16V	*RC9/HYB/HZC, RE9/HYB/HZC*	D	1560	DV6TED4	M	▲	Euro 4	09/04 ▸	1618NR	**700414**	ELEC
C5 (2008>)											
1.6 HDi	*RD9HZC*	D	1560	DV6TED4	M	▲	Euro 4	03/08 ▸	1618NR	**700414**	ELEC
2.0 Hdi 16V	*RWRHH4, RDRHH8, RWRHH8 RWRHE8*	D	1997	DW10CTED4	M	N	Euro 5	10/09 ▸ 10/11	1618NQ	**700434**	E MODULE EGR
2.0 Hdi 16V	*RDR/HE8/HH8, RWR/HE8/HH8 HHA*	D	1997	DW10CTED4	M	Y	Euro 5	10/11 ▸	9678257280	●**700451**	E MODULE EGR
2.0 HDi 16V	*RDR/HEA/HHA, RWR/HEA/HHA*	D	1997	DW10CTED4	A	Y	Euro 5	10/11 ▸	9678257280	●**700451**	E MODULE EGR
2.2 HDi 16V	*RW4HLA, RD4HLA*	D	2179	DW12C	M	▲	Euro 5	01/10 ▸	1618PS	**700441**	E MODULE EGR
2.7 HDi V6	*RDUHZJ*	D	2720	DT17BTED4	A	▲	Euro 4 RIGHT	03/08 ▸	1618N6	**700411**	ELEC
C5 - X7 (2008>)											
2.7 HDi V6	*RDUHZJ*	D	2720	DT17BTED4	A	▲	Euro 4 LEFT	03/08 ▸	1618N7	**700410**	ELEC
C6											
2.7 HDi V6 24V	*TDUHZJ*	D	2720	DT17BTED4	A	▲	Euro 4 LEFT	12/05 ▸	1618N7	**700410**	ELEC
2.7 HDi V6 24V	*TDUHZJ*	D	2720	DT17BTED4	A	▲	Euro 4 RIGHT	12/05 ▸	1618N6	**700411**	ELEC
C8											
2.0 HDi 160 16V	*EBRHHA*	D	1997	DW10CTED4	A	N	Euro 5	06/10 ▸ 01/12	1618NQ	**700434**	E MODULE EGR
2.0 HDi 135 16V 2.0 HDi 160 16V	*EBRHH8, EBRHD8*	D	1997	DW10CB DTR,DW10CTED4	M	N	Euro 5	06/10 ▸ 01/12	1618NQ	**700434**	E MODULE EGR
2.0 HDi 16V	*EBR/HD8/HH8*	D	1997	DW10CB DTR,DW10CTED4	M	Y	Euro 5	01/12 ▸	9678257280	●**700451**	E MODULE EGR
2.0 HDi 16V	*EBRHHA*	D	1997	DW10CTED4	A	Y	Euro 5	01/12 ▸	9678257280	●**700451**	E MODULE EGR
DS4											
2.0 HDi 16V	*NXRHH8*	D	1997	DW10CTED4	M	N	Euro 5	04/11 ▸	1618NQ	**700434**	E MODULE EGR
DS5											
2.0 HDi 16V		D	1997	DW10CTED4	A	N	Euro 5	10/11 ▸	1618NQ	**700434**	E MODULE EGR
2.0 HDi 16V		D	1997	DW10CTED4	M	N	Euro 5	10/11 ▸	1618NQ	**700434**	E MODULE EGR
Evasion (94>98)											
1.9 TD	*U6U/C/J/T*	D	1905	XUD9BTF	M	N	Euro 2	04/95 ▸ 09/98	16287T	**700401**	P
Evasion (98>2002)											
1.9 TD	*U6U/C/C/T*	D	1905	XUD9BTF	M	N	Euro 2	10/98 ▸ 05/02	16287T	**700401**	P

• **New** Nouveau **Nuevo** Novo **Nuovo** Nieuw **Neu** Yeni Новый Nou

Type Ctr.	cc						OE	Valeo	TYPE ▸
CITROËN (.../...)									
Xantia I									
1.9 TD *X18E, X17F, X18A, X17E X14B,*	D	1905	XUD9BTF,XUD9TEF	M	N	Euro 2	03/93 ▸	16287T	**700401**	P
1.9 TD *X18E, X17F, X18A, X17E X14B,*	D	1905	XUD9BTF	A	N	Euro 2	12/97 ▸	16287T	**700401**	P
Xantia II									
2.0 HDi *X1RHZB*	D	1997	DW10ATED	M	N	Euro 3	09/00 ▸ 05/02	1628JZ	**700405**	P
Xsara FL									
1.9 D *N1WJYB*	D	1868	DW8B	M	N	Euro 3	09/00 ▸ 09/02	1628JZ	**700405**	P
2.0 HDi *N2RHZN, N0RHZN, N1RHZN*	D	1997	DW10ATED	A	N	Euro 3	08/01 ▸ 08/05	1628JZ	**700405**	P
2.0 HDi *N1RHYB, N6RHYB, N0RHYB N2RHYB, N0RHZB, N2RHZB N1RHZB*	D	1997	DW10ATED,DW10TD	M	N	Euro 3	09/00 ▸ 08/05	1628JZ	**700405**	P
Xsara Picasso									
1.6 HDi 16V *CH9/HYB/HZC*	D	1560	DV6TED4	M	▲	Euro 4	03/04 ▸	1618NR	**700414**	ELEC
2.0 HDi *CHRHYA, CHRHYB*	D	1997	DW10TD	M	N	Euro 3	12/99 ▸ 12/05	1628JZ	**700405**	P
Xsara (97>2000)									
1.9 D *N1WJZF, N2WJZF, N3WJZF, N0WJZF* ▸ 8420	D	1868	DW8	M	N	Euro 2	09/98 ▸ 11/99	1628CF	**700404**	P
1.9 D,1.9 SD *N1DJYF, N0DJYF, N2DJHVB HWFJYF*	D	1905	XUD9A, XUD9SD, XUD9BSD	M	N	Euro 2	07/97 ▸ 08/00	1628CF	**700404**	P
2.0 HDi *N1RHYF, N6RHYF, N0RHYF N2RHYF*	D	1997	DW10TD	M	N	Euro 3	03/99 ▸ 08/00	1628JZ	**700405**	P
Xsara (2000>)									
1.4 HDi *N18HZB, N28HZB, N08/HZB*	D	1399	DV4TD	M	▲	Euro 3	01/03 ▸	1628XV	**700407**	P
CITROËN									
Berlingo (96>2002)									
1.9 D *MCD9BE, MED9BE, MBD/9BE, MFD/9BE JYF*	D	1905	XUD9A	M	N	Euro 2	07/96 ▸ 12/02	1628CF	**700404**	P
2.0 HDi *MFRHYF, MFRHYB, MCRHYF MBRHYB, MCRHYB*	D	1997	DW10TD	M	N	Euro 3	10/99 ▸ 12/02	1628JZ	**700405**	P
Berlingo (2002>)									
1.6 HDi 16V *GB9/HW/HXC, GC9/HW/HXC GJ9/HW/HXC*	D	1560	DV6BTED4, DV6ATED4	M	▲	Euro 4	01/06 ▸	1618NR	**700414**	ELEC
2.0 HDi *GJRHYB, GCRHYB, GJRHYK GBRHYB, GERHYB*	D	1997	DW10TD	M	N	Euro 3	12/02 ▸ 05/08	1628JZ	**700405**	P
Dispatch (95>2003)									
1.9 TD *BYDHXA, BZDHXA, U6US/5 U6KS*	D	1905	XUD9BTF	M	N	Euro 2	05/98 ▸ 12/03	16287T	**700401**	P
2.0 HDi *BHRHZB*	D	1997	DW10CTED	M	N	Euro 3	01/02 ▸ 12/03	1628JZ	**700405**	P
Dispatch (2004>2006)									
2.0 HDi *BWRHZB*	D	1997	DW10BTED,DW10BTED+L4	M	N	Euro 3	01/04 ▸ 12/06	1628JZ	**700405**	P
Dispatch (2007>2012)									
1.6 HDi 16V *XC9HUC, XS9HUC, XT9HUC XU9HUC, XV9HUC, XW9HUC XA9/HUC*	D	1560	DV6UTED4	M	▲	Euro 4	01/07 ▸ 01/12	1618NR	**700414**	ELEC
2.0 HDi 16V *XDAHY8, XDAHZ8, XCAHY8 XCRHH8, XCAHZ8, XDRHH8*	D	1997	DW10CD DTR,DW10CE DTR DW10CTED4	M	N	Euro 5	01/07 ▸ 01/12	1618NQ	**700434**	E MODULE EGR
Dispatch (2012>)									
2.0 HDi 16V *XCRHH8, XCA/HY8/HZ8 XDRHH8, XDA/HY8/HZ8*	D	1997	DW10CD DTR,DW10CE DTR DW10CTED4	M	Y	Euro 5	01/12 ▸	9678257280	●**700451**	E MODULE EGR

• **New** Nouveau **Nuevo** Novo **Nuovo** Nieuw **Neu** Yeni Новый Nou

Type Ctr.		CC						OE	Valeo	TYPE
CITROËN (.../...)										
Jumper (94>2001)										
1.9 D,1.9 TD	*231/A32/A62/A82/A84/B82 B84/C32/C62/C82/G62/G82 H62/H82/V62/V82, 232/B82 C32/C62/G82/H82/V82*	D	1905	XUD9UTF, XUD9AU	M	N	Euro 2	07/97 ▸ 12/01	1628CF	**700404**	P
2.0 HDi	*231/AJ2/BJ2/VJ2*	D	1997	DW10TD	M	N	Euro 3	09/01 ▸ 12/01	1628WV	**700406**	P
Jumper (2002>2006)										
2.0 HDi	*ZAA/MF/MP, ZBA/MD/MF/MP*	D	1997	DW10UTD	M	N	Euro 3	01/02 ▸ 06/06	1628WV	**700406**	P
2.2 HDi	*ZAR/MF/MP, ZBR/MD/MF/MH MP, ZCR/MD/MF/MH/MM*	D	2179	DW12TED	M	N	Euro 3	01/02 ▸ 06/06	1628WV	**700406**	P
Jumpy (95>2003)										
1.9 TD	*BBDHXA, BEDHXA, BSDHXA BUDHXA, BWDHXA, BYDHXA BZDHXA, BAD/HXA, U6K/S/U U/R, U6U/H/S/5/S/6/S/8/S 9*	D	1905	XUD9BTF	M	N	Euro 2	04/96 ▸ 12/03	16287T	**700401**	P
2.0 HDi	*BCRHZB, BARHZB, BSRHXB BWRHXB, BZRHXA, BSRHZB BYRHXB, BYRHZB, BERHXA BYRHXA, BWRHZB, BZRHXB BDRHXB, BARHXA, BDRHZB BSRHXA, BURHZB, BERHZB*	D	1997	DW10BTED,DW10CTED	M	N	Euro 3	09/00 ▸ 12/03	1628JZ	**700405**	P
Jumpy (2004>2006)										
2.0 HDi	*BSRHXB, BZRHWB, BYRHZB BYRHXB, BWRHXB, BSRHZB BBRHXB, BBRHZB, BURHZB BWRHZB, BERHZB, BERHXB*	D	1997	DW10BTED,DW10BTED+L4	M	N	Euro 3	01/04 ▸ 12/06	1628JZ	**700405**	P
Jumpy (2007>)										
1.6 HDi 16V	*XC9HUC, XS9HUC, XT9HUC XU9HUC, XV9HUC, XW9HUC XA9/HUC*	D	1560	DV6UTED4	M	▲	Euro 4	01/07 ▸	1618NR	**700414**	ELEC
2.0 HDi 16V	*XCAHZ8, XDAHZ8, XCAHY8 XCRHH8, XDAHY8, XDRHH8*	D	1997	DW10CD DTR,DW10CE DTR DW10CTED4	M	N	Euro 5	10/10 ▸ 01/12	1618NQ	**700434**	E MODULE EGR
2.0 HDi 16V	*XCRHHA, XDRHHA*	D	1997	DW10CTED4	A	Y	Euro 5	03/12 ▸	9678257280	●**700451**	E MODULE EGR
2.0 HDi 16V	*XCRHH8, XCA/HY8/HZ8 XDRHH8, XDA/HY8/HZ8*	D	1997	DW10CD DTR,DW10CE DTR DW10CTED4	M	Y	Euro 5	01/12 ▸	9678257280	●**700451**	E MODULE EGR
Nemo										
1.4 HDi	*AA8HSC*	D	1398	DV4TED	M	▲	Euro 4	12/07 ▸	1618PF	**700413**	ELEC
1.3 HDi	*AA8HSC*	D	1248	F13DTE5	M	▲	Euro 4	12/07 ▸	1618PF	**700413**	ELEC
Relay I										
1.9 D,1.9 TD	*231C32/D, 232E82, 232A62 231A62, 232E62, 231A32*	D	1905	XUD9A,XUD9AU,XUD9UTF	M	N	Euro 2	02/94 ▸ 12/01	1628CF	**700404**	P
2.0 HDi	*231AJ2, 231VJ2/D*	D	1997	DW10TD	M	N	Euro 3	09/01 ▸ 12/01	1628WV	**700406**	P
Relay II										
2.0 HDi	*ZBAMD, ZBAMF, ZAAMF*	D	1997	DW10UTD	M	N	Euro 3	01/02 ▸ 06/06	1628WV	**700406**	P
2.2 HDi	*ZCRMH, ZCRMD, ZBRMD ZCRMM, ZBRMF, ZARMF*	D	2179	DW12TED	M	N	Euro 3	01/02 ▸ 06/06	1628WV	**700406**	P
Synergie										
1.9 TD	*U6UC, U6LU*	D	1905	XUD9BTF,XUD9TEF	M	N	Euro 2	10/95 ▸ 05/02	16287T	**700401**	P
Synergie Facelift										
2.0 HDi	*AFRHZA*	D	1997	DW10ATED	M	N	Euro 3	08/99 ▸ 05/02	1628JZ	**700405**	P
FIAT										
Ducato										
2.0 JTD-EGR	*244BAMFAAX, 244BAMABAX 244BAMACAX, 244AAMRA03 244AAMPA02*	D	1997	RHV	M	N	Euro 3	02/94 ▸ 06/06	9640341280	**700406**	P

• **New** Nouveau **Nuevo** Novo **Nuovo** Nieuw **Neu** Yeni Новый Nou

Type Ctr.	D	cc		M	N	Euro		OE	Valeo	TYPE
FIAT (.../...)										
Scudo (95>2003)										
1.9 TD *220ZH5B, 220ZH5, 220XE59 220XH5O, 220ZE5, 220WH5C 220XH5, 220XH51, 220ZE5A 220YH5C, 220ZH5A, 220XE5 220XH5B, 220XH5A, 220YE5 220YH5*	D	1905	XUD9TEF/K,XUD9TEF/L3,XUD9TEF/W3	M	N	Euro 2	07/95 ▸ 12/03	9619452580	**700401**	P
2.0 JTD *220/XN5O/XP5O/YP5A/ZP5 ZP5A*	D	1997	DW10BTED+L4, DW10BTED/L4	M	N	Euro 3	02/00 ▸ 12/03	9635651080	**700405**	P
Scudo (2004>2006)										
2.0 JTD *220/KP5A/YP5R/YV5R/ZP5R ZV5R, 222/0ZP5/0ZPS/0ZV5*	D	1997	DW10BTED+L4, DW10BTED/L4	M	N	Euro 3	01/04 ▸	9635651080	**700405**	P
Ulysse (98>2002)										
1.9 TD *220AHX*	D	1905	XUD9TEF/L3	M	N	Euro 2	10/98 ▸ 08/02	9619452580	**700401**	P
Ulysse (U6) Facelift										
2.0 JTD *220AN5*	D	1997	DW10BTED+L4	M	N	Euro 3	10/99 ▸ 08/02	9635651080	**700405**	P
FORD										
C-Max (CB3)										
1.6 TDCi 16V	D	1560	G8DB/F, 1.6 DQ TDCI	M	▲	Euro 4	03/07 ▸	1526689	●**700444**	ELEC
C-Max (B7)										
1.6 TDCi	D	1560	T1DA/T1DB, T3DA/T3DB	M	N	Euro 5	11/10 ▸	1836229	**700434**	E MODULE EGR
2.0 TDCi	D	1997	TYDA, UFDB, TXDB	M	N	Euro 5	11/10 ▸	1836229	**700434**	E MODULE EGR
Fiesta V (2002>2005)										
1.4 TDCi *NH*	D	1399	F6JA	M	▲	Euro 3	03/02 ▸ 09/05	1148077	**700407**	P
1.6 TDCi 16V *NH*	D	1560	HHDA/B	M	▲	Euro 4	03/02 ▸ 09/05	1526689	●**700444**	ELEC
Fiesta V (2005>)										
1.4 TDCi	D	1399	F6JC	M	▲	Euro 4	10/05 ▸	1363591	**700413**	ELEC
1.4 TDCi *NH*	D	1399	F6JC	M	▲	Euro 4	10/05 ▸	1682736	**700413**	ELEC
Fiesta VI (2008>)										
1.6 TDCi 16V	D	1560	1.6 DQ TDCI/F, 1.6 DURATORQ/F	M	▲	Euro 4	10/08 ▸ 01/09	1526689	●**700444**	ELEC
Focus (2004>)										
1.6 TDCi 16V,1.6 TDCi DPF 16V	D	1560	HHDA/B, D16FAP	M	▲	Euro 4	09/04 ▸	1353152	**700412**	ELEC
1.6 TDCi 16V	D	1560	HHDA/B	A	▲	Euro 4	09/04 ▸	1353152	**700412**	ELEC
Focus II										
1.6 TDCi 16V	D	1560	HHDA/B	A	▲	Euro 4	10/05 ▸	1526689	●**700444**	ELEC
1.6 TDCi 16V	D	1560	G8DA/B,HHDA/B	M	▲	Euro 4	10/05 ▸	1526689	●**700444**	ELEC
Focus II FL										
1.6 TDCi,1.6 TDCi 110,1.6 TDCi 90	D	1560	1.6 DQ TDCI,G8DA,G8DB/F	M	▲	Euro 4	12/07 ▸	1526689	●**700444**	ELEC
Focus III										
2.0 TDCi 16V	D	1997	TXDB, TYDA, UFDB, UKDB	M	N	Euro 5	03/11 ▸	1836229	**700434**	E MODULE EGR
2.0 TDCi 16V	D	1997	TYDA, UFDB, TXDB, UKDB	A	N	Euro 5	03/11 ▸	1836229	**700434**	E MODULE EGR
Focus C-Max (03>05)										
1.6 TDCi 16V *DMIF, DMJF, DMB/F*	D	1560	HHDA/B	M	▲	Euro 3	06/03 ▸ 07/04	1313847	**700409**	ELEC
1.6 TDCi 16V *DMBF, DMIF, DMJF, DM* 1.6 TDCi DPF 16V	D	1560	HHDA/B, D16FAP	M	▲	Euro 4	07/04 ▸ 10/05	1353152	**700412**	ELEC
1.6 TDCi 16V *DMIG, DMJG*	D	1560	HHDA/B	A	▲	Euro 3	06/03 ▸ 07/04	1313847	**700409**	ELEC
1.6 TDCi 16V *DMIG, DMJG* 1.6 TDCi DPF 16V	D	1560	HHDA/B, D16FAP	A	▲	Euro 4	07/04 ▸ 10/05	1353152	**700412**	ELEC
Focus C-MAX (05>)										
1.6 TDCi 16V *DMJG, DMIG*	D	1560	G8DA/B,HHDA/B	A	▲	Euro 4	10/05 ▸ 02/07	1439414	●**700444**	ELEC

• **New** Nouveau **Nuevo** Novo **Nuovo** Nieuw **Neu** Yeni Новый Nou

Type Ctr.		CC						OE	Valeo	TYPE
FORD (.../...)										
Focus C-MAX (05>) (.../...)										
1.6 TDCi 16V *DM, DMBF, DMIF, DMJF*	D	1560	G8DA/B,HHDA/B	M	▲	Euro 4	10/05 ▸ 02/07	1439414	●700444	ELEC
Fusion										
1.4 TDCi	D	1399	F6JA	M	▲	Euro 3	06/02 ▸	1148077	700407	P
1.4 TDCi	D	1399	F6JA	M	▲	Euro 4	01/04 ▸ 03/05	1363591	700413	ELEC
1.6 TDCi 16V	D	1560	HHDA/B	M	▲	Euro 4	11/04 ▸	1526689	●700444	ELEC
Fusion (2005>)										
1.4 TDCi	D	1399	F6JC	M	▲	Euro 4	10/05 ▸	1682736	700413	ELEC
1.6 TDCi 16V	D	1560	HHDA/B	M	▲	Euro 4	10/05 ▸	1526689	●700444	ELEC
Galaxy II FL (CA1)										
2.0 TDCi 16V	D	1997	TXWA, UKWA, TYDA	M	N	Euro 5	03/10 ▸	1836229	700434	E MODULE EGR
2.2 TDCi 16V *KNWA*	D	2179	KNWA	M	N	Euro 5	09/10 ▸	1745685	700442	E MODULE EGR
Kuga										
2.0 TDCi	D	1997	2.0DQ 16V CR TC 2.0DQ DOHC 163, UKMA,	M	N	Euro 5	04/10 ▸	1836229	700434	E MODULE EGR
Mondeo III FL (CA2)										
1.6 TDCi 16V	D	1560	T1BA/T1BB/T1BC	M	N	Euro 5	09/10 ▸	1836229	700434	E MODULE EGR
2.0 TDCi 115 16V,2.0 TDCi 140 16V 2.0 TDCi 163 16V	D	1997	2.0 DURATORQ/F,2.0DQ 16V CR TC 2.0DQ DOHC 163,2.0DQ DOHC DSL	M	N	Euro 5	09/10 ▸	1682007	700434	E MODULE EGR
2.2 TDCI 16V	D	2179	KNBA	M	N	Euro 5	01/10 ▸	BG9Q-9Y456-AC	700442	E MODULE EGR
S-Max FL										
2.0 TDCi 16V	D	1997	2.0DQ 16V CR TC 2.0DQ CR TC 136 2.0DQ DOHC 163,2.0DQ DOHC DSL	M	N	Euro 5	03/10 ▸	1682007	700434	E MODULE EGR
Territory										
2.7 Td6 24V	D	2720	DT17	M	N	Euro 4 RIGHT	01/07 ▸	LR004539	●700423	ELEC
2.7 Td6 24V	D	2720	DT17	A	N	Euro 4 LEFT	01/07 ▸	LR004538	●700422	ELEC
JAGUAR										
S-Type (2004>)										
2.7 D V6 24V	D	2720	DT17	M	▲	Euro 4 RIGHT	03/04 ▸ 10/07	C2C40184	700411	ELEC
2.7 D V6 24V	D	2720	DT17	M	▲	Euro 4 LEFT	03/04 ▸	C2C40183	700410	ELEC
2.7 D V6 24V	D	2720	DT17	A	▲	Euro 4 LEFT	03/04 ▸	C2C40183	700410	ELEC
2.7 D V6 24V	D	2720	DT17	A	▲	Euro 4 RIGHT	03/04 ▸ 10/07	C2C40184	700411	ELEC
XF										
2.7 D V6 24V	D	2720	DT17	A	▲	Euro 4 LEFT	08/07 ▸ 03/09	C2C40183	700410	ELEC
2.7 D V6 24V	D	2720	DT17	A	▲	Euro 4 RIGHT	08/07 ▸ 03/09	C2C40184	700411	ELEC
XJ										
2.7 D V6 24V	D	2720	DT17	A	▲	Euro 4 LEFT	10/05 ▸ 12/09	C2C40183	700410	ELEC
2.7 D V6 24V	D	2720	DT17	A	▲	Euro 4 RIGHT	10/05 ▸ 03/09	C2C40184	700411	ELEC
LANCIA										
Zeta										
2.0 JTD *220AN5*	D	1997	DW10ATED	M	N	Euro 3	01/00 ▸ 08/02	9635651080	700405	P
LAND ROVER										
Discovery (2004>2009)										
2.7 Td6 24V *LAAA18*	D	2720	DT17	M	▲	Euro 4 LEFT	11/04 ▸	LR010124	700410	ELEC
2.7 Td6 24V	D	2720	DT17	M	▲	Euro 4 RIGHT	11/04 ▸ 09/09	LR010125	700411	ELEC

• **New** Nouveau **Nuevo** Novo **Nuovo** Nieuw **Neu** Yeni Новый Nou

Type Ctr.		cc						OE	Valeo	TYPE
LAND ROVER (.../...)										
Discovery (2004>2009) (.../...)										
2.7 Td6 24V	D	2720	DT17	A	▲	Euro 4 LEFT	11/04 ▸	LR010124	**700410**	ELEC
2.7 Td6 24V *LAAA18*	D	2720	DT17	A	▲	Euro 4 RIGHT	11/04 ▸ 09/09	LR010125	**700411**	ELEC
Discovery III (2004>)										
2.7 Td6 24V *LAAA18*	D	2720	DT17	M	N	Euro 4 LEFT	01/07 ▸	LR018323	●**700422**	ELEC
7A000001 ▸										
2.7 Td6 24V *LAAA18*	D	2720	DT17	M	N	Euro 4 RIGHT	01/07 ▸	LR018324	●**700423**	ELEC
7A000001 ▸										
2.7 Td6 24V	D	2720	DT17	A	N	Euro 4 LEFT	01/07 ▸	LR018323	●**700422**	ELEC
7A000001 ▸										
2.7 Td6 24V	D	2720	DT17	A	N	Euro 4 RIGHT	01/07 ▸	LR018324	●**700423**	ELEC
7A000001 ▸										
Range Rover Sport (2005>)										
2.7 TDV6 24V *LSAA64*	D	2720	DT17	A	N	Euro 4 LEFT	01/07 ▸ 08/09	LR018323	●**700422**	ELEC
7A000001 ▸										
2.7 TDV6 24V *LSAA64*	D	2720	DT17	A	N	Euro 4 RIGHT	01/07 ▸ 08/09	LR018324	●**700423**	ELEC
7A000001 ▸										
Range Rover Sport (2005>2009)										
2.7 TDV6 24V *LSAA64*	D	2720	DT17	A	▲	Euro 4 LEFT	06/05 ▸	LR010124	**700410**	ELEC
Range Rover Sport (2005>)										
2.7 TDV6 24V *LSAA64*	D	2720	DT17	A	▲	Euro 4 RIGHT	06/05 ▸ 03/09	LR010125	**700411**	ELEC
Range Rover (2007>)										
3.6 TDV8 32V	D	3630	LION V8-3.6	A	N	Euro 4 RIGHT	01/07 ▸ 06/09	LR018321	●**700421**	ELEC
7A112768 ▸										
3.6 TDV8 32V	D	3630	LION V8-3.6	A	N	Euro 4 LEFT	04/07 ▸	LR018322	●**700420**	ELEC
7A112768 ▸										
Range Rover Sport (2007>)										
3.6 TDV8 32V	D	3630	LION V8-3.6	A	N	Euro 4 LEFT	04/07 ▸	LR018322	●**700420**	ELEC
7A112768 ▸										
3.6 TDV8 32V	D	3630	LION V8-3.6	A	N	Euro 4 RIGHT	04/07 ▸ 07/10	LR018321	●**700421**	ELEC
7A112768 ▸										
MAZDA										
Mazda 2										
1.6 TDCi 16V *DE1462, DE1362,*	D	1560	MZ-CD16	M	▲	Euro 4	11/08 ▸	Y60520300C	●**700444**	ELEC
Mazda 3										
1.6 TDCi 16V *BK1432, BK1232, BK14Y2 BK12Y2, BK1462, BL12Y2 BL14Y2, BL14Y6, BL12Y6*	D	1560	MZ-CD16	M	▲	Euro 4	06/03 ▸ 10/11	Y60520300C	●**700444**	ELEC
MINI										
Mini Clubman										
1.6 D 16V *MN61, MN62*	D	1560	9HZ	A	▲	Euro 4	03/07 ▸ 08/10	11717804950	●**700444**	ELEC
1.6 D 16V *MN51, MN52*	D	1560	9HZ	M	▲	Euro 4	03/07 ▸ 08/10	11717804950	●**700444**	ELEC
Mini Cooper										
1.6 D 16V *MG31, MG32*	D	1560	9HZ	M	▲	Euro 4	03/07 ▸ 08/10	11717804950	●**700444**	ELEC
Mini One										
1.6 D 16V *MG51, MG52*	D	1560	9HZ	M	▲	Euro 4	06/09 ▸ 08/10	11717804950	●**700444**	ELEC
NISSAN										
Murano II (Z51)										
2.5 dCi 16V	D	2488	YD25DDTI	A	N	Euro 5	05/10 ▸	147351AT0A	●**700453**	BY-PASS+COOLER P

• **New** Nouveau **Nuevo** Novo **Nuovo** Nieuw **Neu** Yeni Новый Nou

Type Ctr.		CC					OE	Valeo	TYPE
NISSAN (.../...)									
Qashqai									
1.6 dCi 130 *BZ12, DZ00, KZ00, KZ12 BZ0/0, JZ00, JZ12*	D	1598	R9M	M	Y	Euro 5	09/11 ▸	1471000Q0U	●700449	ELEC
NISSAN									
Cabstar									
2.5 TD *UVL2L/JF/JG/JY, UVL2R/JF JG/JY, UVL3L/EG/EY/JF/JG JY, UVL3R/EG/EY/JF/JG/JY UVL4L/EG/EY/JF/JG/JY UVL4R/EG/EY/JF/JG/JY*	D	2488	YD25DDTI (LO),YD25DDTI (MI)	M	N	Euro 5	10/11 ▸	147355X00A	●700452	BY-PASS+COOLER P
3.0 TD *UWS2L/J2/JF, UWS2R/J2/JF UWS3L/E2/EF/J2/JF, UWS3R E2/EF/J2/JF, UWS4L/E2/EF J2/JF, UWS4R/E2/EF/J2/JF*	D	2953	ZD30 KAI (HI)	M	N	Euro 5	10/11 ▸	147355X00A	●700452	BY-PASS+COOLER P
PEUGEOT									
107									
1.4 HDi *PM8HTC, PN8HTC*	D	1398	DV4TD	M	▲	Euro 4	06/05 ▸	1618PF	700413	ELEC
206									
1.4 HDi *2C8HXF, 2E8HXF, 2S8HXF 2A8/HXF*	D	1398	DV4TD	M	▲	Euro 3	03/02 ▸ 09/05	1628XV	700407	P
1.4 HDi *2C8HZA, 2E8HZA, 2A8/HZA*	D	1399	DV4TD	M	▲	Euro 4	10/05 ▸	1618PF	700413	ELEC
1.6 HDi 16V *2H9HZA, 2J9HZA, 2K9HZA 2D9/HZA*	D	1560	DV6TED4	M	▲	Euro 4	04/04 ▸	1618NR	700414	ELEC
2.0 Hdi 10189 ▸ *2AR/HYE/HYF/HYU, 2ERHYF 2KRHYF, 2SRHYE, 2CR/HYE HYF/HYU/HYX*	D	1997	DW10TD	M	N	Euro 3	09/04 ▸ 10/05	1618Q0	700405	P
206 +									
1.4 HDi *2L8HZA, 2M8HZA*	D	1398	DV4TD	M	▲	Euro 4	03/09 ▸	1618PF	700413	ELEC
207									
1.4 HDi *WA8HZC, WC8HZC*	D	1399	DV4TD	M	▲	Euro 4	03/06 ▸	1618PF	700413	ELEC
1.6 HDi 16V *WB9HZC, WA9/HXC/HYC/HZC WC9/HXC/HYC/HZC*	D	1560	DV6TED4, DV6ATED4	M	▲	Euro 4	03/06 ▸	1618NR	700414	ELEC
306 (97>2002)									
1.9 D *7ADJYT, 7ADJYE, 7AD9BD, 7BDJYE 7EDJYT, 7EDJYE, 7BDJYT, 7CDJYT 7TDJYE, 7CDJYE, 7BD9BD, 7ED9BD 7SDJYE, 7SDJYT*	D	1905	XUD9A	M	N	Euro 2	03/97 ▸ 03/02	1628CF	700404	P
1.9 SD *7BDHVE, 7ADHVE, 7EDHVE 7CDHVE*	D	1905	XUD9BSD	M	N	Euro 3	07/97 ▸ 03/02	1628JZ	700405	P
2.0 HDi *7ERHYF, 7BRHYE, 7ARHYF 7ARHYE, 7HRHYE, 7ERHYE 7CRHYE, 7HRHYF, 7BRHYF 7JRHYF*	D	1997	DW10TD	M	N	Euro 3	03/99 ▸ 03/02	1628JZ	700405	P
307(2001>2005)									
1.4 HDi *3A8/HZB, 3E8HZB, 3C8/HZB HZM*	D	1399	DV4TD	M	▲	Euro 3	02/02 ▸ 06/05	1628XV	700407	P
1.6 HDi,1.6 HDi 16V *3C9HYB, 3E9HYB, 3H9HYB 3A9/HXC/HYB*	D	1560	DV6ATED4, DV6TED4	M	▲	Euro 4	07/04 ▸ 06/05	1618NR	700414	ELEC
2.0 HDi *3CRHYB, 3ERHYB, 3CRHYM 3HRHYB, 3ARHYB, 3ARHYM*	D	1997	DW10TD	M	N	Euro 3	03/01 ▸ 03/05	1628JZ	700405	P

• **New** Nouveau **Nuevo** Novo **Nuovo** Nieuw **Neu** Yeni Новый Nou

Type Ctr.		cc					OE	Valeo	TYPE ▸
PEUGEOT (.../...)									
307 (2005>)									
1.6 HDi 16V	*3A9/HXC/HYB/HZB, 3C9/HXC HYB/HZB/HZC, 3E9/HXC/HYB HZB, 3H9/HXC/HYB/HZB*	D	1560	DV6ATED4, DV6TED4	M	▲	Euro 4	06/05 ▸	1618NR	**700414**	ELEC
307 Restyling									
2.0 HDi	*3ERHY, 3CRHY, 3ARHY 3HRHY*	D	1997	DW10TD	M	N	Euro 3	12/06 ▸ 06/08	1628JZ	**700405**	P
308									
1.6 HDi 16V	*4C9/HCZ/HVC/HXC/HZH*	D	1560	DV6TED4B, DV6ATED4, DV6TED4	M	▲	Euro 4	09/07 ▸	1618NR	**700414**	ELEC
2.0 Hdi 16V	*4BRHHB, 4HRHE8/1, 4HRHE8 4CRHE8/1*	D	1997	DW10CTED4	M	N	Euro 5	09/08 ▸	1618NQ	**700434**	E MODULE EGR
2.0 HDi 16V	*4CRHE8, 4HRHE8, 4BR/HHB*	D	1997	DW10CTED4	M	Y	Euro 5	10/11 ▸	9678257280	●**700451**	E MODULE EGR
2.0 HDi 16V	*4CRHHA, 4HRHHA, 4BR/HHA*	D	1997	DW10CTED4	A	Y	Euro 5	10/11 ▸	9678257280	●**700451**	E MODULE EGR
3008									
1.6 HDi 110 16V	*0U9HZH*	D	1560	DV6TED4	M	▲	Euro 4	03/09 ▸	1618NR	**700414**	ELEC
2.0 Hdi 16V	*0URHE8, 0URHE8/1*	D	1997	DW10CTED4	M	N	Euro 5	03/09 ▸ 10/11	1618NQ	**700434**	E MODULE EGR
2.0 HDi 16V	*0URHE8*	D	1997	DW10CTED4	M	Y	Euro 5	10/11 ▸	9678257280	●**700451**	E MODULE EGR
2.0 HDi 16V	*0URHHA*	D	1997	DW10CTED4	A	Y	Euro 5	10/11 ▸	9678257280	●**700451**	E MODULE EGR
406 (95>2003)									
1.9 TD	*8BD8B2, 8BD8BD, 8BD8B 8ED8BD*	D	1905	XUD9TE	M	N	Euro 2	11/95 ▸ 03/99	16287T	**700401**	P
2.0 HDi	*8ERHZE, 8FRHZE*	D	1997	DW10ATED	M	N	Euro 3	10/98 ▸ 03/99	1628JZ	**700405**	P
406 (99>2004)									
2.0 HPi 16V	*8BRLZF*	E	1997	EW10D	M	N	Euro 4	10/01 ▸ 03/04	1628WR	**700408**	ELEC
2.0 HDi	*8BRHZE, 8BRHYE, 8BRHYF 8ERHZE, 8FRHYF, 8FRHYE 8ERHYE, 8ERHYF*	D	1997	DW10ATED, DW10TD	M	N	Euro 3	04/99 ▸ 03/04	1628JZ	**700405**	P
407									
1.6 HDi 16V	*6D9/HYC/HZC, 6E9/HYC/HZC*	D	1560	DV6TED4	M	▲	Euro 4	04/04 ▸	1618NR	**700414**	ELEC
2.7 HDi V6 24V	*6EUHZJ, 6JUHZJ, 6DU/HZJ*	D	2720	DT17BTED4	A	▲	Euro 4 LEFT	10/05 ▸	1618N7	**700410**	ELEC
2.7 HDi V6 24V	*6EUHZJ, 6JUHZJ, 6DU/HZJ*	D	2720	DT17BTED4	A	▲	Euro 4 RIGHT	10/05 ▸	1618N6	**700411**	ELEC
2.0 Hdi 16V	*6JRHH8*	D	1997	DW10CTED4	M	N	Euro 5	07/09 ▸ 08/11	1618NQ	**700434**	E MODULE EGR
508									
2.0 HDi 16V	*8DRHHA, 8ERHHA*	D	1997	DW10CTED4	A	N	Euro 5	03/11 ▸ 10/11	1618NQ	**700434**	E MODULE EGR
2.0 HDi 2.0 HDi Hybride 16V	*8URHC8, 8ERHH8, 8DRHH8*	D	1997	DW10CTED4	M	N	Euro 5	03/11 ▸ 10/11	1618NQ	**700434**	E MODULE EGR
2.0 HDi 16V	*8DRHH8, 8ERHH8*	D	1997	DW10CTED4	M	Y	Euro 5	10/11 ▸	9678257280	●**700451**	E MODULE EGR
2.0 HDi 16V	*8DRHHA, 8ERHHA*	D	1997	DW10CTED4	A	Y	Euro 5	10/11 ▸	9678257280	●**700451**	E MODULE EGR
2.2 HDi 16V	*8D4HLA, 8E4HLA*	D	2179	DW12C	A	▲	Euro 5	03/11 ▸	9678163380	**700441**	E MODULE EGR
5008									
2.0 Hdi 16V	*0ERHE8/1, 0ERHE8*	D	1997	DW10CTED4	M	N	Euro 5	09/09 ▸ 10/11	1618NQ	**700434**	E MODULE EGR
2.0 HDi 16V	*0ARHE8, 0ERHE8*	D	1997	DW10CTED4	M	Y	Euro 5	10/11 ▸	9678257280	●**700451**	E MODULE EGR
2.0 HDi 16V	*0ARHHA*	D	1997	DW10CTED4	A	Y	Euro 5	10/11 ▸	9678257280	●**700451**	E MODULE EGR
1.6 HDi 110 16V	*0E9HZH, 0A9HZH*	D	1560	DV6TED4	M	▲	Euro 4	09/09 ▸	1618NR	**700414**	ELEC
607 (2000>2004)									
2.0 HDi	*9DRHZB*	D	1997	DW10ATED	M	N	Euro 3	05/00 ▸ 09/04	1628JZ	**700405**	P
607 FL (2004>2011)									
2.7 HDi 24V	*9UUHZJ*	D	2720	DT17BTED4	A	▲	Euro 4 LEFT	10/04 ▸	1618N7	**700410**	ELEC
607 (2004>)									
2.7 HDi 24V	*9UUHZJ*	D	2720	DT17BTED4	A	▲	Euro 4 RIGHT	10/04 ▸	1618N6	**700411**	ELEC
807									
2.0 Hdi 16V	*EBRHH8, EBRHD8, EBRHHA*	D	1997	DW10CTED4	M	N	Euro 5	06/10 ▸ 01/12	1618NQ	**700434**	E MODULE EGR

• **New** Nouveau **Nuevo** Novo **Nuovo** Nieuw **Neu** Yeni Новый Nou

Type Ctr.		CC					OE	Valeo	TYPE ▸
PEUGEOT (.../...)									
807 (.../...)									
2.0 HDi 16V	EBR/HD8/HH8	D	1997	DW10CB DTR,DW10CTED4	M	Y	Euro 5	01/12 ▸	9678257280	●700451	E MODULE EGR
2.0 HDi 16V	EBRHHA	D	1997	DW10CTED4	A	Y	Euro 5	01/12 ▸	9678257280	●700451	E MODULE EGR
1007									
1.4 HDi	KM8HXB	D	1398	DV4TD	M	▲	Euro 4	09/05 ▸	1618PF	700413	ELEC
1.4 HDi	KM8HZB	D	1399	DV4TD	M	▲	Euro 3	04/05 ▸	1628XV	700407	P
1.6 HDi 16V	KM9HZC	D	1560	DV6TED4	M	▲	Euro 4	02/07 ▸	1618NR	700414	ELEC
PEUGEOT									
Bipper									
1.4 HDi	AA8HSC	D	1398	DV4TED	M	▲	Euro 4	12/07 ▸	1618PF	700413	ELEC
1.3 HDi	AA8HSC	D	1248	F13DTE5	M	▲	Euro 4	12/07 ▸	1618PF	700413	ELEC
Boxer (94>2001)									
1.9 D	231A32, 231C32	D	1905	XUD9A	M	N	Euro 2	09/98 ▸ 12/01	1628CF	700404	P
Boxer (2002>2006)									
2.0 HDi	ZAA/MF/MP, ZBA/MD/MF/MP	D	1997	DW10UTD	M	N	Euro 3	01/02 ▸ 06/06	1628WV	700406	P
2.2 HDi	ZAR/MF/MP, ZBR/MD/MF/MH MP, ZCR/MD/MF/MH/MM	D	2179	DW12TED	M	N	Euro 3	01/02 ▸ 06/06	1628WV	700406	P
Expert (95>2003)									
1.9 TD	223DH2, 224DH2	D	1905	XUD9BTF	M	N	Euro 2	07/97 ▸ 12/03	16287T	700401	P
2.0 HDi	BURHZB, BDRHZA, BSRHZB BERHZB, BZRHXA, BWRHZB BZRHXB, BYRHXB, BDRHZ BDRHXA, BARHZB, BDRHZB BSRHXA, BDRHXB, BSRHXB BCRHZB, BYRHZB, BHRHZB BYRHXA, BERHXA	D	1997	DW10ATED,DW10BTED,DW10CTED	M	N	Euro 3	09/00 ▸ 12/03	1628JZ	700405	P
Expert II (2007>)									
1.6 HDi 16V	XC9HUC, XS9HUC, XT9HUC XU9HUC, XV9HUC, XW9HUC XA9/HUC	D	1560	DV6UTED4	M	▲	Euro 4	01/07 ▸	1618NR	700414	ELEC
2.0 HDi 16V	XCRHH8, XCA/HY8/HZ8 XDRHH8, XSAHZ8, XTAHZ8 XTRHH8, XUAHZ8, XURHH8 XVAHZ8, XWAHZ8, XDA/HY8 HZ8	D	1997	DW10CD DTR,DW10CE DTR DW10CTED4	M	Y	Euro 5	01/12 ▸	9678257280	●700451	E MODULE EGR
2.0 HDi 16V	XCRHHA, XDRHHA	D	1997	DW10CTED4	A	Y	Euro 5	03/12 ▸	9678257280	●700451	E MODULE EGR
Expert Facelift									
2.0 HDi	BBRHXB, BERHZB, BERHXB BSRHXB, BSRHZB, BWRHZB BWRHXB, BYRHZB, BYRHXB BBRHZB, BZRHXB, BURHZB	D	1997	DW10BTED,DW10BTED4	M	N	Euro 3	01/04 ▸ 12/06	1628JZ	700405	P
Expert II									
2.0 HDi 16V	XDAHZ8, XCAHY8, XUAHZ8 XVAHZ8, XTAHZ8, XWAHZ8 XSAHZ8, XDAHY8, XDRHH8 XTRHH8, XURHH8, XCAHZ8 XCRHH8	D	1997	DW10CD DTR,DW10CE DTR DW10CTED4	M	N	Euro 5	10/10 ▸ 01/12	1618NQ	700434	E MODULE EGR
Partner (96>2002)									
1.9 D	5CD9BD, 5DD9BD, 5FD9BD, 5BD/9BD	D	1905	XUD9A	M	N	Euro 2	06/96 ▸ 11/02	1628CF	700404	P
2.0 HDi	5FRHYF, 5CRHYF, 5FRHYE 5FRHYU, 5BRHYE, 5BRHYF 5CRHYE	D	1997	DW10TD	M	N	Euro 3	05/00 ▸ 11/02	1628JZ	700405	P

• **New** Nouveau **Nuevo** Novo **Nuovo** Nieuw **Neu** Yeni Новый Nou

Type Ctr.	cc						OE	Valeo	TYPE ▸
PEUGEOT (.../...)									
Partner (2002>)									
1.6 HDi 16V *GB9/HWC/HXC, GC9/HWC/HXC GJ9/HWC/HXC*	D	1560	DV6ATED4, DV6BTED4	M	▲	Euro 4	01/06 ▸	1618NR	**700414**	ELEC
2.0 HDi *GJRHYB, GJRHYK, GBRHYB GERHYB, GCRHYB, GJRHY*	D	1997	DW10TD	M	N	Euro 3	11/02 ▸ 05/08	1628JZ	**700405**	P
Ranch (96>2002)									
1.9 D *5BD9BD, 5CD9BD*	D	1905	XUD9A	M	N	Euro 2	06/96 ▸ 11/02	1628CF	**700404**	P
Ranch (2002>)									
1.6 HDi 16V *GC9HXC, GJ9HXC, GB9/HW HXC*	D	1560	DV6ATED4, DV6BTED4	M	▲	Euro 4	01/06 ▸	1618NR	**700414**	ELEC
Ranch (M49)									
2.0 HDi *5BRHYF, 5CRHYF*	D	1997	DW10TD	M	N	Euro 3	01/01 ▸ 11/02	1628JZ	**700405**	P
Ranch (M59F/U)									
2.0 HDi *GBRHYB, GCRHYB, GJRHYB*	D	1997	DW10TD	M	N	Euro 3	11/02 ▸ 05/08	1628JZ	**700405**	P
PEUGEOT									
RCZ									
2.0 HDi 16V *4JRHH8*	D	1997	DW10CTED4	M	N	Euro 5	05/10 ▸ 10/11	1618NQ	**700434**	E MODULE EGR
2.0 HDi 16V *4JRHH8*	D	1997	DW10CTED4	M	Y	Euro 5	10/11 ▸	9678257280	●**700451**	E MODULE EGR
RENAULT									
Mégane III (2008>)									
1.5 dCi 106 *DZ1W*	D	1461	K9K	M	N	Euro 5	07/09 ▸	147106293R	**700433**	E MODULE EGR
1.9 dCi 130 *JZ0/J/N, JZ1/J/K/S*	D	1870	F9Q 870/872/268	M	N	Euro 5	04/09 ▸	147106293R	**700433**	E MODULE EGR
Mégane III (2012>)									
1.6 dCi 130 *BZ12, KZ12, KZ00, BZ00 DZ00*	D	1598	R9M	M	Y	Euro 5	04/12 ▸	147101478R	●**700449**	ELEC
Scénic III (2009>2012)									
1.9 dCi 130 *JZ0/J/N, JZ1/J/K/S*	D	1870	F9Q 870/872/268	M	N	Euro 5	04/09 ▸ 01/12	147106293R	**700433**	E MODULE EGR
Scénic III (2012>)									
1.6 dCi 130 *BZ12, DZ00, KZ00, KZ12 BZ0/0, JZ00, JZ12*	D	1598	R9M	M	Y	Euro 5	02/12 ▸	147101478R	●**700449**	ELEC
SEAT									
Altea									
2.0 TDI 16V *5P12N1/5P13N1/5P15N1 5P52N1/5P53N1/5P88N4*	D	1968	CEGA/F	M	Y	Euro 5	11/10 ▸	03L131501K	**700424**	ELEC
Arosa									
1.7 SDi *6H1074, 6H10M4,* ▸ 630 201	D	1716	AKU	M	Y	Euro 5	08/97 ▸	03G131501P	**700424**	ELEC
Exeo									
2.0 TDI 16V *3R2/1N1/2N1/2Q1/4N1/4Q1*	D	1968	CAGA/F,CAHA/F	M	Y	Euro 5	11/10 ▸	03L131501K	**700424**	ELEC
Leon									
2.0 TDi 16V *1P15N3,*	D	1968	CEGA/F	A	Y	Euro 5	09/09 ▸ 05/10	03L131501K	**700424**	ELEC
2.0 TDi 16V *1P15N1*	D	1968	CEGA/F	M	Y	Euro 5	03/09 ▸ 01/10	03L131501G	**700424**	ELEC
Leon II FL									
2.0 TDi 16V *1P15N1, 1P15N3*	D	1968	CEGA/F	M	Y	Euro 5	05/10 ▸	03L131501K	**700424**	ELEC

• **New** Nouveau **Nuevo** Novo **Nuovo** Nieuw **Neu** Yeni Новый Nou

Valeo

Type Ctr.		CC						OE	Valeo	TYPE ▸
SEAT (.../...)										
Toledo										
2.0 TDi 16V 2.0 TDi PD 16V	*5P2073, 5P2173, 5P2273*	D	1968	BMN	A	Y	Euro 5	01/06 ▸	03G131501P	**700424**	ELEC
2.0 TDi PD 16V	*5P2261*	D	1968	BMN	M	Y	Euro 5	01/06 ▸	03G131501P	**700424**	ELEC
SKODA										
Octavia II FL (2009>2013)										
2.0 TDI 16V	*1Z3515, 1Z5515*	D	1968	CEGA/F	M	Y	Euro 5	05/09 ▸	03L131501K	**700424**	ELEC
2.0 TDI 16V	*1Z351C, 1Z551C*	D	1968	CEGA/F	A	Y	Euro 5	05/09 ▸	03L131501K	**700424**	ELEC
Roomster										
1.4 TDi	*5J7P34*	D	1422	BNV	M	Y	Euro 5	03/07 ▸ 03/10	03L131501K	**700424**	ELEC
Superb II (2008>2010)										
2.0 TDi 16V	*3T4/175/17Y/275/27Y/375 37Y*	D	1968	CBBB/F	M	Y	Euro 5	02/08 ▸ 11/10	03L131501K	**700424**	ELEC
2.0 TDi 16V	*3T4/175/17Y/275/27Y/375 37Y, 3T5/175/17Y/275/27Y 375/37Y*	D	1968	CBBB/F	M	Y	Euro 5	02/08 ▸ 11/10	03L131501K	**700424**	ELEC
2.0 TDi 16V	*3T4/17C/27C/37C*	D	1968	CBBB/F	A	Y	Euro 5	02/08 ▸ 11/10	03L131501K	**700424**	ELEC
2.0 TDi 16V	*3T4/17C/27C/37C, 3T5/17C 27C/37C*	D	1968	CBBB/F	A	Y	Euro 5	02/08 ▸ 11/10	03L131501K	**700424**	ELEC
Yeti (2009>2010)										
2.0 TDI CR 140 16V 2.0 TDI CR 170 16V	*5L7/15Y/17Y/25Y/27Y/35Y 37Y*	D	1968	CBDB/F,CEGA/F	M	Y	Euro 5	02/09 ▸ 11/10	03L131501K	**700424**	ELEC
SUZUKI										
Grand Vitara										
1,9 DDIS 610001 ▸	*JB419-4*	D	1870	F9Q	M	▲	Euro 5	03/06 ▸	1811167JG4	●**700447**	E MODULE EGR
SX4										
1.6 DDiS 16V	*RW416D*	D	1560	9HX (DVA6TED4)	M	▲	Euro 4	07/09 ▸	1852069K02	**700414**	ELEC
TOYOTA										
Aygo										
1.4 D	*WNB10L, WNB10R*	D	1398	2WZTV	M	▲	Euro 4	05/05 ▸	SU00100884	**700413**	ELEC
VOLKSWAGEN										
Eos										
2.0 TDi 16V	*1F73*	D	1968	CBAB/F	M	Y	Euro 5	11/10 ▸	03L131501K	**700424**	ELEC
2.0 TDi 16V	*1F73*	D	1968	CBAB/F	A	Y	Euro 5	11/10 ▸	03L131501K	**700424**	ELEC
Golf V										
2.0 TDi 16V	*1K12, 1K1B, 1K13*	D	1968	BMN	A	Y	Euro 5	11/05 ▸	03G131501	**700424**	ELEC
2.0 TDi 16V	*1K12, 1K1B, 1K13*	D	1968	BMN	A	Y	Euro 5	11/05 ▸ 11/08	03G131501P	**700424**	ELEC
2.0 TDi 16V	*1K13, 1K12, 1K1B*	D	1968	BMN	M	Y	Euro 5	11/05 ▸	03G131501	**700424**	ELEC
2.0 TDi 16V	*1K13, 1K1B, 1K12*	D	1968	BMN	M	Y	Euro 5	11/05 ▸ 11/08	03G131501P	**700424**	ELEC
Golf VI (2008>)										
2.0 TDI 16V	*5K1/2/3/4*	D	1968	CBAA/F,CBAB/F,CBDC/F	M	Y	Euro 5	11/10 ▸	03L131501K	**700424**	ELEC
2.0 TDI 16V	*AJ53, 5K1/2/3/4/8*	D	1968	CBAA/F,CBAB/F,CBBB/F,CBDC/F,CJAA/F	M	Y	Euro 5	11/10 ▸	03L131501K	**700424**	ELEC
2.0 TDI 16V	*5K1/2/3/4*	D	1968	CBAB/F,CBDC/F	A	Y	Euro 5	11/10 ▸	03L131501K	**700424**	ELEC
2.0 TDI 16V	*AJ53, 5K1/2/3/4/8*	D	1968	CBAB/F,CBBB/F,CBDC/F,CJAA/F	A	Y	Euro 5	11/10 ▸	03L131501K	**700424**	ELEC
Golf VI Plus (2009>)										
2.0 TDI 16V	*521/2/3/4*	D	1968	CBDC/F	M	Y	Euro 5	11/10 ▸	03L131501K	**700424**	ELEC

• **New** Nouveau **Nuevo** Novo **Nuovo** Nieuw **Neu** Yeni Новый Nou

Type Ctr.	cc					OE	Valeo	TYPE
VOLKSWAGEN (.../...)								
Golf VI Plus (2009>) (.../...)								
2.0 TDI 16V *521/2/3/4*	D	1968	CBDC/F	A	Y	Euro 5	11/10 ▸	03L131501K	**700424**	ELEC
Jetta (2005>)								
2.0 TDi 16V *1K2/1/2*	D	1968	CBDB/F,CEGA/F	M	Y	Euro 5	11/10 ▸	03L131501K	**700424**	ELEC
2.0 TDi 16V *1K2/1/2*	D	1968	CBDB/F,CEGA/F	A	Y	Euro 5	11/10 ▸	03L131501K	**700424**	ELEC
New Beetle II								
2.0 TDI 16V *5C739M, 5C139M*	D	1968	CJAA	A	Y	Euro 5	04/12 ▸	03L131501K	**700424**	ELEC
2.0 TDi 16V *5C139L, 5C739L*	D	1968	CJAA	M	Y	Euro 5	04/12 ▸	03L131501K	**700424**	ELEC
Passat (2005>)								
2.0 TDi 16V *3C2/0/1/2/3, 3C5/0/1/2/3*	D	1968	CBAA/F,CBAB/F,CBBB/F,CBDC/F	M	Y	Euro 5	11/10 ▸	03L131501K	**700424**	ELEC
2.0 TDi 16V *3C2/0/1/2/3, 3C5/0/1/2/3*	D	1968	CBAA/F,CBAB/F	M	Y	Euro 5	11/10 ▸	03L131501K	**700424**	ELEC
2.0 TDi 16V *3C2/0/1/2/3, 3C5/0/1/2/3*	D	1968	CBAA/F,CBAB/F,CBBB/F	A	Y	Euro 5	11/10 ▸	03L131501K	**700424**	ELEC
2.0 TDi 16V *3C2/0/1/2/3, 3C5/0/1/2/3*	D	1968	CBAA/F,CBAB/F	A	Y	Euro 5	11/10 ▸	03L131501K	**700424**	ELEC
Passat CC								
2.0 TDI,2.0 TDI 16V *3572*	D	1968	CBAA/F,CBAB/F,CBBB/F	M	Y	Euro 5	11/10 ▸	03L131501K	**700424**	ELEC
2.0 TDI,2.0 TDI 16V *3572*	D	1968	CBAA/F,CBAB/F,CBBB/F	M	Y	Euro 5	11/10 ▸	03L131501K	**700424**	ELEC
2.0 TDI,2.0 TDI 16V *3572*	D	1968	CBAA/F,CBAB/F,CBBB/F	A	Y	Euro 5	11/10 ▸	03L131501K	**700424**	ELEC
2.0 TDI,2.0 TDI 16V *3572*	D	1968	CBAA/F,CBAB/F,CBBB/F	A	Y	Euro 5	11/10 ▸	03L131501K	**700424**	ELEC
Scirocco (2008>)								
2.0 TDI 16V *1372*	D	1968	CBBB/F,CBDB/F	M	Y	Euro 5	11/10 ▸	03L131501K	**700424**	ELEC
2.0 TDI 16V *1372*	D	1968	CBDB/F	M	Y	Euro 5	11/10 ▸	03L131501K	**700424**	ELEC
2.0 TDI 16V *1372*	D	1968	CBBB/F	A	Y	Euro 5	11/10 ▸	03L131501K	**700424**	ELEC
2.0 TDI 16V *1372*	D	1968	CBDB/F	A	Y	Euro 5	11/10 ▸	03L131501K	**700424**	ELEC
Tiguan								
2.0 TDi 16V *5N1/0/1/2*	D	1968	CBAA/F,CBAB/F,CBBA/F,CBBB/F	M	Y	Euro 5	11/10 ▸	03L131501K	**700424**	ELEC
2.0 TDi 16V *5N1/0/1/2*	D	1968	CBAA/F,CBAB/F,CBBA/F,CBBB/F	M	Y	Euro 5	11/10 ▸	03L131501K	**700424**	ELEC
2.0 TDi 16V *5N1/0/1/2*	D	1968	CBAA/F,CBAB/F	A	Y	Euro 5	11/10 ▸	03L131501K	**700424**	ELEC
2.0 TDi 16V *5N1/0/1/2*	D	1968	CBAA/F,CBAB/F	A	Y	Euro 5	11/10 ▸	03L131501K	**700424**	ELEC
Touareg								
4.2 TDi V8 32V *7P52T3*	D	4134	CKDA	A	Y	Euro 5	01/10 ▸	03L131501K	**700424**	ELEC
Touran								
2.0 TDi 16V *1T2H737, 1T2H730, 1T1T737 1T1T730, 1T1T717 1T1T710*	D	1968	BMN	A	Y	Euro 5	11/05 ▸	03G131501	**700424**	ELEC
2.0 TDi *1T2H717, 1T2H710, 1T2A717 1T2A710*	D	1968	BMN	M	Y	Euro 5	11/06 ▸	03G131501	**700424**	ELEC
VOLKSWAGEN								
Amarok								
2.0 BiTDi 180,2.0 TDi 120 *2HAA, 2HBA*	D	1968	CNEA,CNFA	M	▲	Euro 5	11/11 ▸	03L131501R	●**700448**	ELEC
2.0 BiTDi 180 *2HBA*	D	1968	CSHA	A	▲	Euro 5	11/11 ▸	03L131501R	●**700448**	ELEC
Caravelle								
2.0 TDI	D	1968	CAAA/F,CAAB/F,CAAC/F,CCHA/F,CFCA/F	M	▲	Euro 5	09/09 ▸	03L131512BM	**700435**	E MODULE EGR
California								
2.0 TDI	D	1968	CAAA/F,CAAB/F,CAAC/F,CCHA/F,CFCA/F	M	▲	Euro 5	09/09 ▸	03L131512BM	**700435**	E MODULE EGR
Crafter								
2.0 BiTDI,2.0 TDi *2EA/0/1, 2EB/0/1, 2ED/0/1 2, 2EE/0/1, 2EK1, 2EH/1/2 2FC/0/1, 2FF/0/1/2, 2FG 0/1/2, 2FL/1/2, 2FM/1/2 2FZ/0/1*	D	1968	CKTB,CKTC,CKUB,CKUC	M	▲	Euro 5	05/11 ▸	03L131501R	●**700448**	ELEC

• **New** Nouveau **Nuevo** Novo **Nuovo** Nieuw **Neu** Yeni Новый Nou

Type Ctr.		CC					OE	Valeo	TYPE ▸
VOLKSWAGEN (.../...)									
Transporter (7E/7F)									
2.0 TDI *7ENC31, 7EB112, 7FD131 7EBX12, 7EJX35, 7FL022 7FE151, 7EJ112, 7EBX31 7EBX22, 7EBS55, 7EA112 7EFD35, 7EMC35, 7EBS22 7EBX35, 7FE131, 7EFE12*	D	1968	CAAA/F,CAAB/F,CAAC/F,CCHA/F,CFCA/F	M	▲	Euro 5	09/09 ▸	03L131512BM	**700435**	E MODULE EGR
2.0 TDI *7FE137, 7EMC37, 7FD157 7EJS37, 7EJ137, 7EFE57 7EBS37, 7EFD37, 7EFE37 7FD137, 7EBS57, 7EH137 7EMC37, 7EB137, 7EMH37 7EA137, 7EJX37,7EBS37*	D	1968	CAAC/F,CCHA/F,CFCA/F	A	▲	Euro 5	09/09 ▸	03L131512BM	**700435**	E MODULE EGR
VOLVO									
C30									
1.6 D 16V *MK76H2*	D	1560	D4164T	M	▲	Euro 4	10/06 ▸ 04/10	36000977	**700412**	ELEC
2.0 D	D	1997	D4204T	M	N	Euro 5		30725803	**700434**	E MODULE EGR
S40									
1.6 D 16V	D	1560	D4164T	M	▲	Euro 4	01/05 ▸	30750092	**700412**	ELEC
2.0 D	D	1997	D4204T	M	N	Euro 5		30725803	**700434**	E MODULE EGR
V50									
1.6 D 16V *MW7652*	D	1560	D4164T	M	▲	Euro 4	01/05 ▸	30750092	**700412**	ELEC
2.0 D	D	1997	D4204T	M	N	Euro 5		30725803	**700434**	E MODULE EGR
V70 III									
1.6 d 110 16V	D	1560	D4164T	M	▲	Euro 4	07/09 ▸ 03/11	36001412	●**700444**	ELEC
S80 II									
1.6 d 16V	D	1560	D4164T	M	▲	Euro 4	07/09 ▸ 05/10	36001412	●**700444**	ELEC

• **New** Nouveau **Nuevo** Novo **Nuovo** Nieuw **Neu** Yeni Новый Nou

AIR INTAKE THROTTLE

DOSEUR D'AIR / CUERPO DE ACELERACION / CORPO FARFALLATO / DROSSELKLAPPEN

VALEO PRODUCT CHARACTERISTICS

Caractéristiques du produit Valeo / Características del producto Valeo / Caratteristiche del prodotto Valeo / Valeo Produktmerkmale

PLASTIC AIR INTAKE THROTTLE BODY

Doseur d'air en plastique / Cuerpo de aceleración de plastico / Corpo farfallato di plastica / Drosselklappen Mit Kunststoffgehäuse

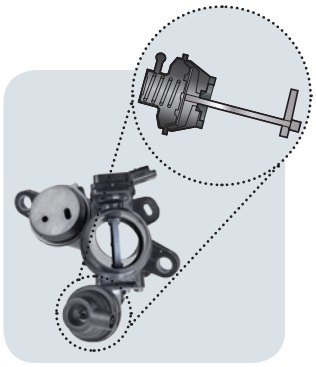

PNEUMATIC CONTROL [P]

- FR Commande pneumatique [P]
- SP Mando neumático [P]
- IT Comando pneumatico [P]
- DE Pneumatische Steuerung [P]

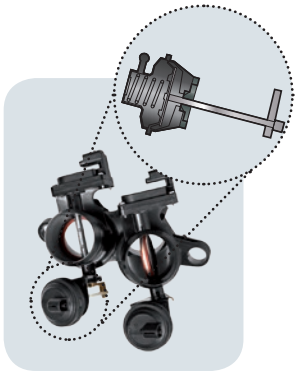

DOUBLE PNEUMATIC CONTROL

- FR Commande pneumatique double
- SP Mando neumático doble
- IT Comando pneumatico dopio
- DE Pneumatische Doppel-Steuerung

ALUMINUM AIR INTAKE THROTTLE BODY

Doseur d'air en aluminum / Cuerpo de aceleración de aluminio / Corpo farfallato di alluminio / Drosselklappen Mit Aluminiumgehäuse

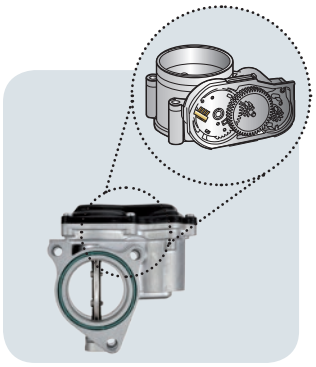

ELECTRICAL CONTROL [ELEC]

- FR Contrôle électrique [ELEC]
- SP Mando eléctrico [ELEC]
- IT Comando elettrico [ELEC]
- DE Elektrich Steuerung [ELEC]

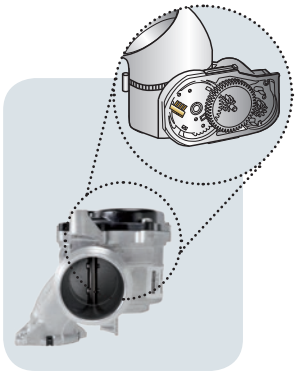

ELECTRICAL CONTROL AND PIPE

- FR Contrôle électrique et canalisation
- SP Mando electrico y conducto de tubo
- IT Comando elettrico e condotto tubo
- DE Elektrich Steuerung und Ansaugkanal

POSITION IN VEHICLE

Position dans le véhicule / Posición en vehículo / Posizione nel veicolo / Position Im Fahrzeug

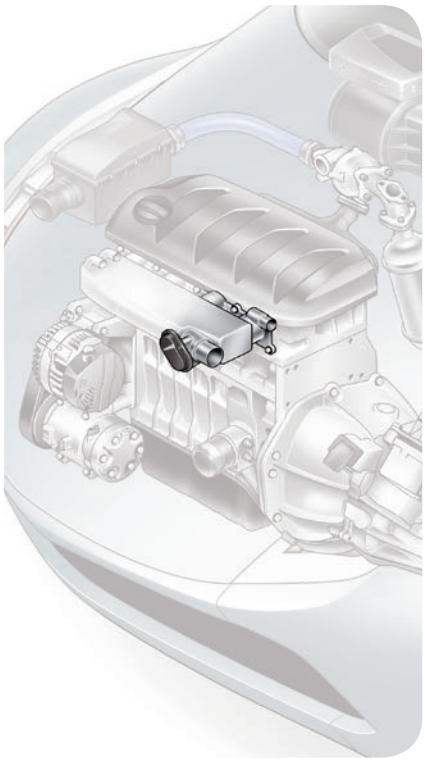

- EN The air intake throttle is mounted at the intake manifold of the engine
- FR Le doseur d'air est monté dans le collecteur d'admission d'air du moteur
- SP El cuerpo de aceleración esta montado en el colector de admisión de aire del motor
- IT Le corpo farfallato di aspirazione dell'aria è montato nel collettore di aspirazione aria del motore
- DE Die Ansaug-Drosselklappe ist am Ansaugkrümmer des Motors verbaut

INTERFACE

Interface / Interfaz / Interfaccia / Schnittstelle

CONNECTOR (NUMBER OF PINS)

- FR Connecteur (Nombre de broches)
- SP Conector (Numéro de contactos)
- IT Connettore (Numero di Pin)
- DE Anschluss (Anzahl der Pins)

ACCESSORIES

OF PRODUCT FOR MOUNTING*

Accessoires de produit pour le montage* / Accesorios del producto para el montaje* / Accessori del prodotto per il montaggio* / Zubehör für den Einbau des Produkts*

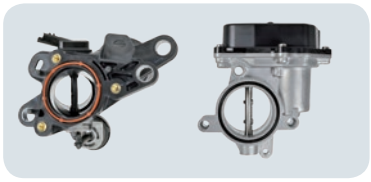

- EN * There are several configurations in the range
- FR * Il existe plusieurs configurations dans l'offre
- SP * Existen varias configuraciones en la gama
- IT * Non tutti i riferimenti possono avere gli accessori, così come indicato nell'immagine
- DE * Mehrere Konfigurationen Werden Angeboten

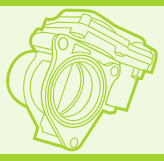

6

Valeo

Valeo

Valeo

Air intake throttle
Doseur d'air
Cuerpo de mariposa
Corpo de borboleta
Corpo farfallato
Gasklephuis
Regeklappe

Korpus przepustnicy
Hrdlo skrtici klapky
Carcasa clapeta
Gaz kelebek mansonu
Патрубок дроссельной заслонки
Στόμιο ιεταλούδας γκαζιού

Type Ctr.		cc					OE	Valeo
AUDI								
A1								
1.6 Tdi 16V *8XAA14, 8X1A1G, 8XAABG 8X1AE4, 8X1A14,8XAAE4 8X1BE4*	D	1598	CAYC	M	Y	Euro 5	05/10 ▸	03L128063AD	**700432**
2.0 TDI 16V *8XAB4C, 8XAB5C*	D	1968	CFHB, CFHD	M	Y	Euro 5	09/11 ▸	03L128063AD	**700432**
A3 (2008>)								
1.6 Tdi 90 *8P1AC4, 8P1AEG, 8P1BC4 8P1BEG, 8P1CC4, 8P1EE4 8P1EED, 8PAAC4, 8PAAE4 8PAAEG, 8PABC4, 8PABE4 8PABEG, 8PACC4, 8PACE4 8PACEG, 8PAEE4, 8PAEED*	D	1598	CAYB/F,CAYC/F	M	Y	Euro 5	04/09 ▸	03G128063L	**700432**
1.6 Tdi 90 *8PACEG, 8P1CEG, 8PAAEG 8P1BEG, 8PABEG, 8P1AEG*	D	1598	CAYC/F	A	Y	Euro 5	11/09 ▸	03G128063L	**700432**
CITROËN								
C4 Picasso (2006>)								
2.0 Hdi 16V *NCRHE8*	D	1997	DW10CTED4	M	Y	Euro 5	01/10 ▸ 09/10	0345G7	**700440**
2.0 Hdi 16V	D	1997	DW10CTED4	M	N	Euro 5	09/10 ▸	9674935480	●**700443**
PEUGEOT								
3008								
2.0 Hdi 16V *0URHE8, 0URHE8/1, 0URHHA 0URHHA/1*	D	1997	DW10CTED4	M	Y	Euro 5	01/10 ▸ 09/10	0345G7	**700440**
2.0 Hdi 16V	D	1997	DW10CTED4	M	N	Euro 5	09/10 ▸	9674935480	●**700443**
5008								
2.0 Hdi 16V *0ARHE8, 0ARHE8/1, 0ARHHA*	D	1997	DW10CTED4	M	Y	Euro 5	06/09 ▸	0345G7	**700440**
RENAULT								
Clio III (2005>)								
1.5 dCi *CR0H, BR1N, CR1C, BR0H BR1C, CR1N, SR0H, KR0H KR1N*	D	1461	K9K 278/282/288/292/790	M	Y	Euro 4	09/05 ▸	8200302798	**700416**
Mégane II (2002>)								
1.5 dCi *KM1E, BM1E, LM1E, CM1E EM1E, GM1E, SM1E*	D	1461	K9K 278/282/288/292/790	M	Y	Euro 4	09/02 ▸	8200302798	**700416**
Mégane III (2008>)								
1.5 dCi *BZ1A, BZ1G, BZ1W, BZ0B DZ0B, DZ0D, KZ0C, KZ1F KZ1G, BZ0A, BZ1F, BZ1M BZ0C, KZ1A, BZ0D, DZ1A DZ1W, KZ0D, DZ0C, KZ1W KZ1M, DZ1F, DZ0A, DZ1G DZ1M*	D	1461	K9K STEP 2/3	M	Y	Euro 5	10/08 ▸	8200614985	**700429**
1.9 dCi 130 *BZ1S, DZ1S, BZ0N, BZ1K BZ0J, DZ1K, DZ0J, KZ0N KZ0J, DZ1J, DZ0N, BZ1J*	D	1870	F9Q 870/872/268	M	Y	Euro 5	10/08 ▸	8200754913	**700430**
2.0 dCi 150 *KZ0Y, BZ0Y, DZ0Y*	D	1995	M9R 744/748/754/800/802/805/806/808/809/816/830/832/833/835/836	A	N	Euro 5	10/08 ▸	8200987453	**700431**
2.0 dCi 160 *KZ0L, BZ0L, DZ0L*	D	1995	M9R 744/748/754/800/802/805/806/808/809/816/830/832/833/835/836	M	N	Euro 5	10/08 ▸	8200987453	**700431**
Mégane Scénic III								
1.5 DCI	D	1461	K9K	M	Y	Euro 5	11/08 ▸	161A09794R	●**700450**

• **New** Nouveau **Nuevo** Novo **Nuovo** Nieuw **Neu** Yeni Новый Nou

									OE	Valeo
RENAULT (.../...)										
Mégane Scénic III (.../...)										
1.5 DCI		D	1461	K9K	A	Y	Euro 5	11/08 ▸	161A09794R	●700450
Modus (2004>2007)										
1.5 dCi	JP0H	D	1461	K9K 278/282/288/292/790	M	Y	Euro 4	01/05 ▸ 12/07	8200302798	700416
Scénic III (2009>)										
1.5 dCi 105	JZ0B, JZ07	D	1461	K9K 278/282/288/292/790	M	Y	Euro 4	04/09 ▸	8200302798	700416
1.5 dCi 110	JZ1M, JZ1W, JZ1G, JZ0D	D	1461	K9K 278/282/288/292/790	M	Y	Euro 5	04/09 ▸	8200614985	700429
1.9 dCi 130	JZ1S, JZ0J, JZ0N, JZ1J JZ1K	D	1870	F9Q 870/872/268	M	Y	Euro 5	04/09 ▸	8200754913	700430
2.0 dCi 150	JZ0Y	D	1995	M9R 744/748/754/800/802/805/806/ 808/809/816/830/832/833/835/836	A	N	Euro 5	04/09 ▸	8200987453	700431
2.0 dCi 160	JZ0L	D	1995	M9R 744/748/754/800/802/805/806/ 808/809/816/830/832/833/835/836	M	N	Euro 5	04/09 ▸	8200987453	700431
SEAT										
Altea FL										
1.6 TDi	5P11U2, 5P11U5, 5P12U2 5P12U5, 5P13U2, 5P13U5 5P13U5, 5P19Z2, 5P51U2 5P51U5, 5P51Z2, 5P52U2 5P52U5, 5P53U2, 5P53U5 5P59Z2, 5P88U2	D	1598	CAYB , CAYC	M	Y	Euro 5	10/09 ▸	03L128063AD	700432
1.6 TDi	5P11U5, 5P12U5, 5P13U5 5P51U5, 5P52U5, 5P53U5	D	1598	CAYB , CAYC	A	Y	Euro 5	02/10 ▸	03L128063AD	700432
2.0 TDi 16V	5P88K4, 5P51K1, 5P12K1 5P52K1, 5P88Y4	D	1968	CFHC	M	Y	Euro 5	09/10 ▸	03L128063AD	700432
2.0 TDi 16V	5P12K3, 5P52K3, 5P51K3	D	1968	CFHC	A	Y	Euro 5	10/10 ▸	03L128063AD	700432
Ibiza IV										
1.6 TDi 16V	6J1224, 6J1244, 6J1324 6J1344, 6J1524, 6J1544 6J5224, 6J5244, 6J5324 6J5344, 6J5544, 6J8224 6J8244, 6J8324, 6J8344 6J8544	D	1598	CAYA, CAYB, CAYC, CLNA	M	Y	Euro 5	05/09 ▸	03L128063AD	700432
Leon II										
1.6 TDi 16V	1P12U5, 1P13U5, 1P11U5	D	1598	CAYC	A	Y	Euro 5	02/10 ▸	03L128063AD	700432
1.6 TDi 16V	1P11U2, 1P11U6, 1P12U2 1P12U6, 1P13U2	D	1598	CAYC	M	Y	Euro 5	02/10 ▸	03L128063AD	700432
Toledo										
1.6 TDi 16V	KG3284	D	1598	CAYC, CLNA	M	Y	Euro 5	07/12 ▸	03L128063AD	700432
SKODA										
Fabia II FL										
1.6 TDi 16V	542S44, 542144, 542154 542184, 542444, 542454 542484, 545144, 545154 545184, 545244, 545254 545284, 545344, 545354 545384, 545444, 545454 545484, 542S44, 542S54 542S84, 545S44, 545S54 545S84	D	1598	CAYA, CAYB, CAYC, CLNA	M	Y	Euro 5	03/10 ▸	03L128063AD	700432
Octavia (2008>)										
1.6 TDi 90	1Z3124, 1Z3221, 1Z3224 1Z3324, 1Z5124, 1Z5221 1Z5224, 1Z522Y, 1Z5324 1Z532Y	D	1598	CAYC/F	M	Y	Euro 5	11/09 ▸	03G128063L	700432

• **New** Nouveau **Nuevo** Novo **Nuovo** Nieuw **Neu** Yeni Новый Nou

		Type Ctr.		cc					OE	Valeo
SKODA (.../...)										
Octavia (2008>) (.../...)										
1.6 TDi 90	*1Z312D, 1Z322D, 1Z332D 1Z512D, 1Z522D, 1Z532D*	D	1598	CAYC/F	A	Y	Euro 5	11/09 ▸	03G128063L	**700432**
Rapid										
1.6 TDi	*NH3284*	D	1598	CAYC, CLNA	M	Y	Euro 5	07/12 ▸	03L128063AD	**700432**
Roomster FL										
1.6 TDi	*5J7154, 5J7184, 5J7254 5J7284, 5J7354, 5J7384 5J7454, 5J7484, 5J7P54 5J7S54, 5J7S84*	D	1598	CAYB , CAYC	M	Y	Euro 5	03/10 ▸	03L128063AD	**700432**
Superb II										
1.6 TDi	*3T4111, 3T4114, 3T5111 3T5114*	D	1598	CAYC	M	Y	Euro 5	09/10 ▸	03L128063AD	**700432**
Yeti										
1.6 TDi	*5L7111*	D	1598	CAYC	M	Y	Euro 5	11/10 ▸	03L128063AD	**700432**
VOLKSWAGEN										
Golf VI										
1.6 TDi 16V	*5K122P, 5K122W, 5K122Z 5K132P, 5K132W, 5K132Z 5K142P, 5K142W, 5K142Z AJ522P, AJ522Z, AJ532P AJ532Z, AJ542P, AJ542W AJ542Z*	D	1598	CAYC	A	Y	Euro 5	07/09 ▸ 11/12	03L128063AD	**700432**
1.6 TDi 16V	*5K120K, 5K122K, 5K122N 5K122S, 5K122V, 5K130K 5K132K, 5K132S, 5K132V 5K142K, 5K142S, 5K142V AJ520K, AJ522K, AJ522Q AJ522S, AJ522V, AJ532K AJ532Q, AJ532S, AJ532V AJ542K, AJ542Q, AJ542S AJ542V, AJ5532*	D	1598	CAYB, CAYC	M	Y	Euro 5	07/09 ▸ 11/12	03L128063AD	**700432**
Golf VI Plus										
1.6 TDi 16V	*52122P, 52132Z, 52132P 52132P, 52142P, 52132Z 521C2P, 521C2P, 52142P 52122P*	D	1598	CAYC	A	Y	Euro 5	05/09 ▸	03L128063AD	**700432**
1.6 TDi 16V	*52120K, 52122K, 52122V 52132K, 52132V, 52142K 521C2K*	D	1598	CAYB, CAYC	M	Y	Euro 5	05/09 ▸	03L128063AD	**700432**
Jetta III										
1.6 TDi 16V	*1K222P*	D	1598	CAYC	A	Y	Euro 5	07/09 ▸ 10/10	03L128063AD	**700432**
1.6 TDi 16V	*1K220K, 1K220K*	D	1598	CAYB, CAYC	M	Y	Euro 5	07/09 ▸ 10/10	03L128063AD	**700432**
Jetta IV										
1.6 TDi 16V	*162225, 162222Z*	D	1598	CAYC	A	Y	Euro 5	10/10 ▸	03L128063AD	**700432**
1.6 TDi 16V	*16222V, 162221*	D	1598	CAYC	M	Y	Euro 5	10/10 ▸	03L128063AD	**700432**
New Beetle II										
1.6 TDi 16V	*5C722Z, 5C122Z*	D	1598	CAYC	A	Y	Euro 5	10/11 ▸	03L128063AD	**700432**
1.6 TDi 16V	*5C122V, 5C7221,*	D	1598	CAYC	M	Y	Euro 5	12/12 ▸	03L128063AD	**700432**

• **New** Nouveau **Nuevo** Novo **Nuovo** Nieuw **Neu** Yeni Новый Nou

Type Ctr.		CC						OE	Valeo
VOLKSWAGEN (.../...)									
Passat VI									
1.6 TDi 16V	3C202N, 3C202V, 3C212V 3C222V, 3C232V, 3C502N 3C502V, 3C512V, 3C522V 3C532V	D	1598	CAYC	M	Y	Euro 5	11/09 ▸ 11/10	03L128063AD	**700432**
Passat VII									
1.6 TDi 16V	36521Z, 36221Z	D	1598	CAYC	A	Y	Euro 5	10/11 ▸	03L128063AD	**700432**
1.6 TDi 16V	36221N, 36521N	D	1598	CAYC	M	Y	Euro 5	12/10 ▸	03L128063AD	**700432**
Polo (2009>)									
1.6 TDI	6R1214, 6R1214, 6R1244 6R1314, 6R1324, 6R1344 6R1414, 6R1424, 6R1444	D	1598	CAYA/F,CAYB/F,CAYC/F	M	Y	Euro 5	06/09 ▸	03G128063L	**700432**
1.6 TDI	6R1227, 6R1327, 6R1427	D	1598	CAYC/F	A	Y	Euro 5	11/09 ▸	03G128063L	**700432**
Touran II									
1.6 TDi 16V	1T2A21, 1T2C21, 1T2H21 1T2T21	D	1598	CAYC	M	Y	Euro 5	04/10 ▸ 05/10	03L128063AD	**700432**
Touran III									
1.6 TDi 16V	1T3224, 1T322Z, 1T3324 1T3424, 1T3C24	D	1598	CAYC	A	Y	Euro 5	05/10 ▸	03L128063AD	**700432**
1.6 TDi 16V	1T3201, 1T3221, 1T322X 1T3321, 1T332X, 1T3421 1T342X, 1T3C21	D	1598	CAYB, CAYC	M	Y	Euro 5	05/10 ▸	03L128063AD	**700432**
Touran Bluemotion									
2.0 TDI 16V DSG6	1T33AY	D	1968	CFHC	A	Y	Euro 5	05/10 ▸	03L128063AD	**700432**
VOLKSWAGEN									
Caddy IV									
1.6 TDI	2CAA85, 2CBC85, 2CHA85 2CJC85	D	1598	CAYD	A	Y	Euro 5	08/10 ▸	03L128063AD	**700432**
1.6 TDI	2CAA72, 2CAA7A, 2CAA82 2CAA8A, 2CBC72, 2CBC7A 2CBC82, 2CBC8A, 2CHA82 2CHA8A, 2CJC82, 2CJC8A	D	1598	CAYD, CAYE	M	Y	Euro 5	08/10 ▸	03L128063AD	**700432**

• **New** Nouveau **Nuevo** Novo **Nuovo** Nieuw **Neu** Yeni Новый Nou

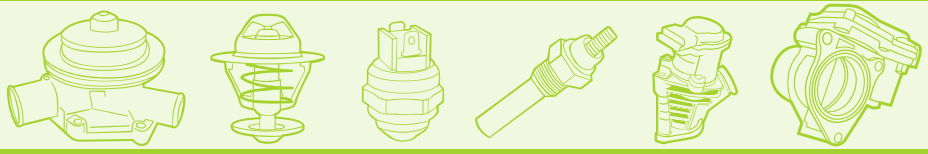

7

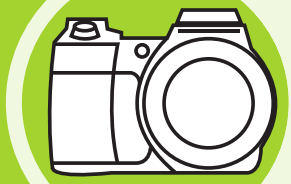

Valeo

Valeo 506000

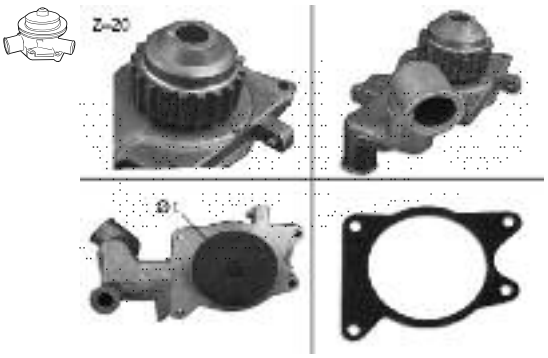

FORD 5008470

Valeo 506001

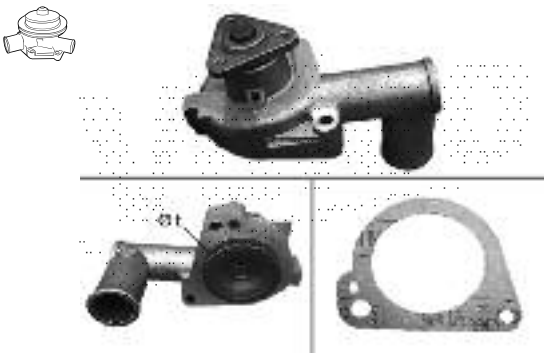

FORD 5024603

Valeo 506003

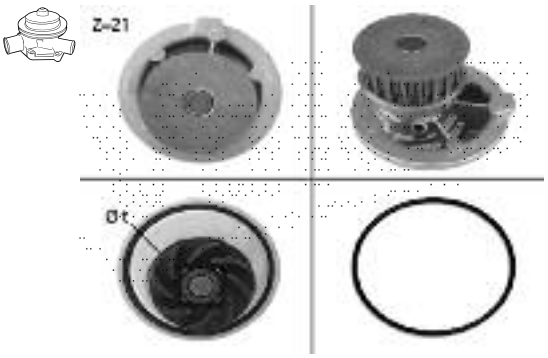

VAUXHALL R1160009

Valeo 506004

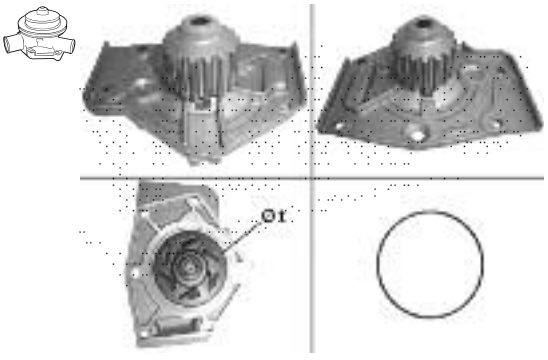

ROVER GWP183

Valeo 506005

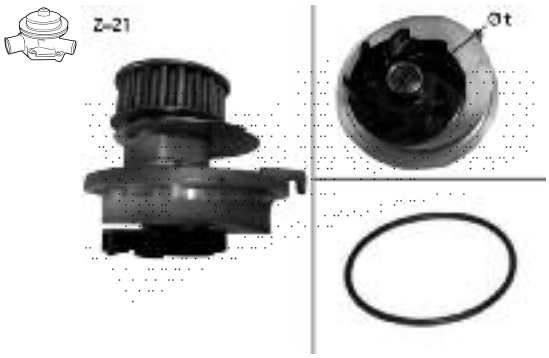

OPEL 1334008

Valeo 506006

OPEL 1334023

Valeo 506007

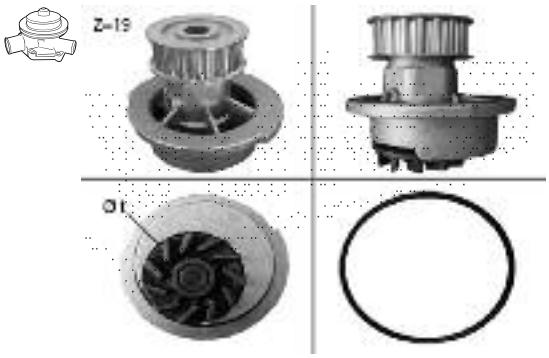

DAEWOO 90325660A

Valeo 506008

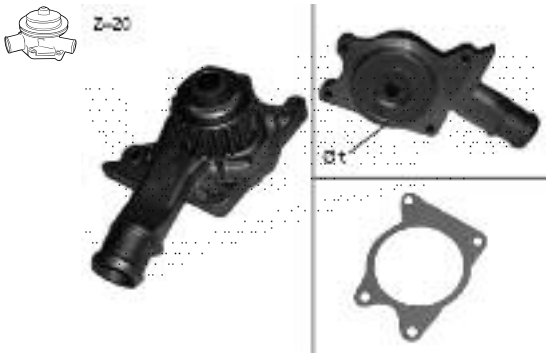

FORD 5020651

Valeo 506009

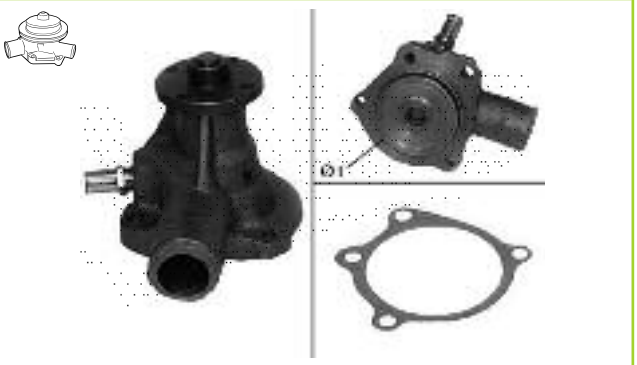

FORD 5013267

Valeo 506010

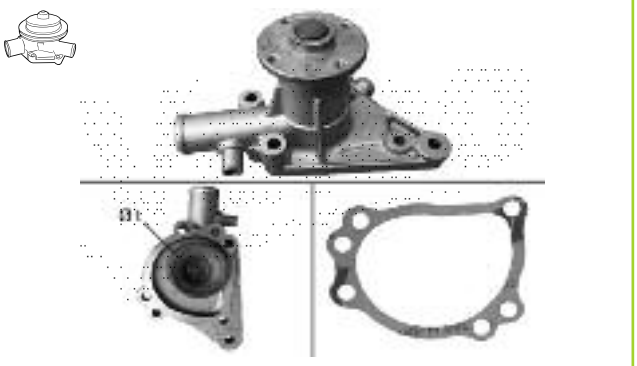

ROVER GWP134

Valeo 506011

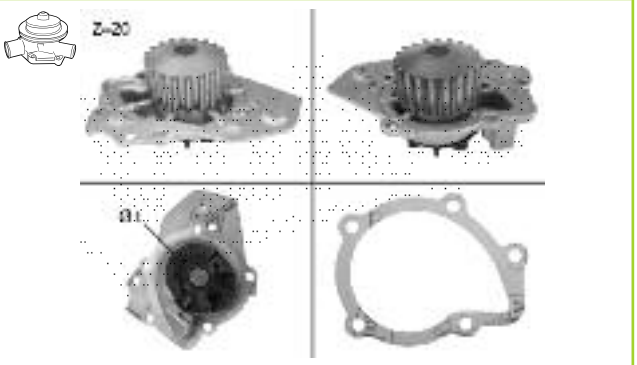

TALBOT 120163

Valeo 506012

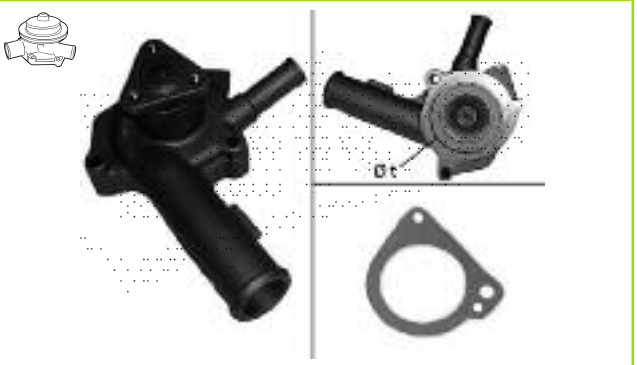

FORD 5025908

Valeo 506013

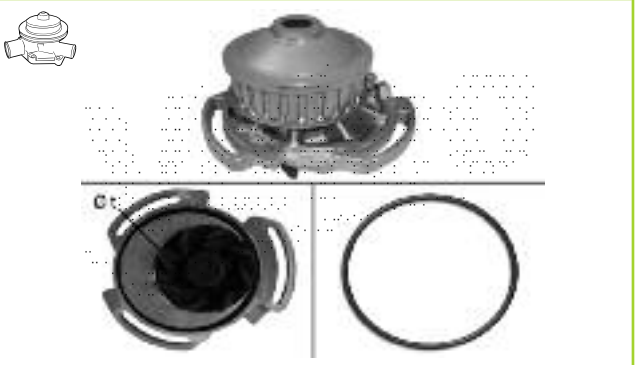

VOLKSWAGEN 052121005AV

Valeo 506014

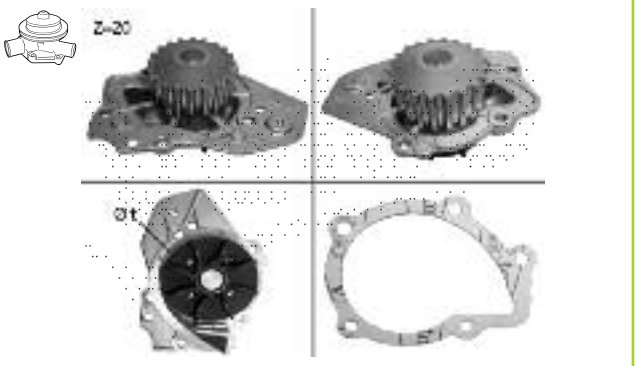

PEUGEOT 120160

Valeo 506016

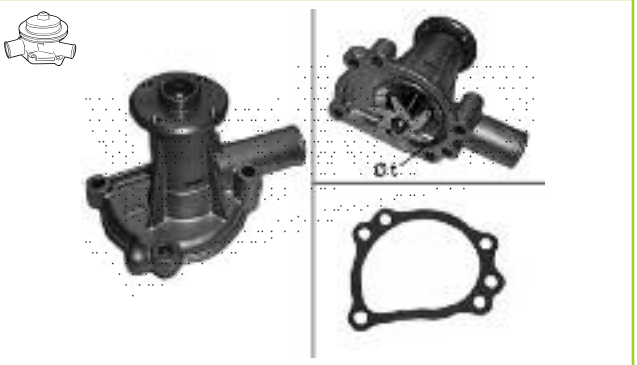

ROVER GWP188

Valeo 506018

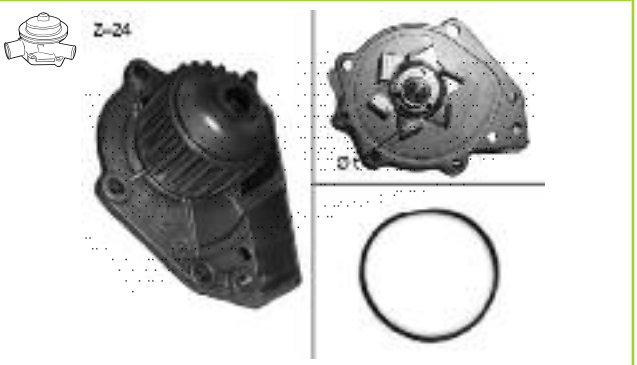

ROVER GWP336

Valeo 506019

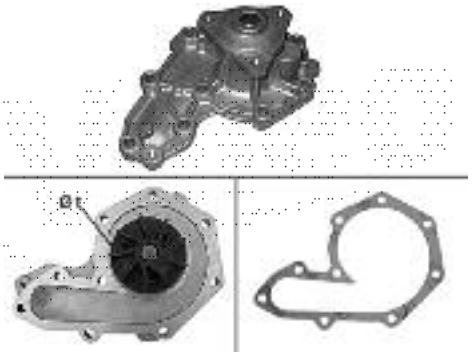

RENAULT 7701473365

Valeo 506022

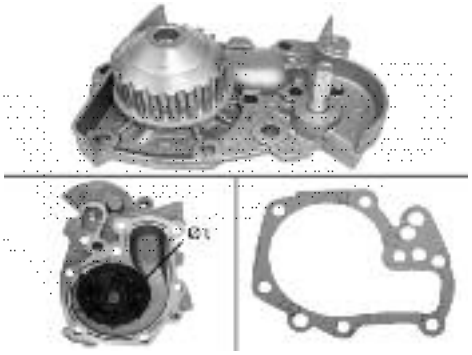

RENAULT 7701462419

Valeo 506023

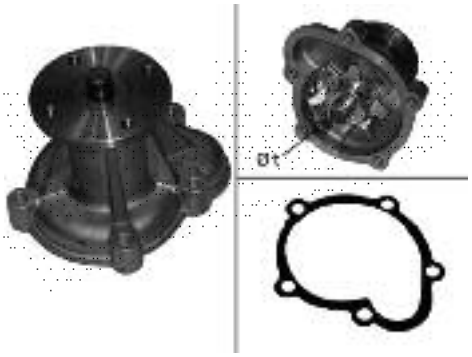

NISSAN 2101050A28

Valeo 506025

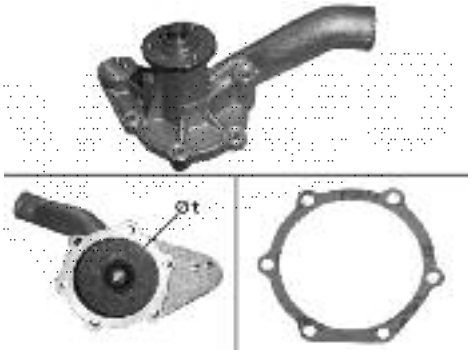

ROVER GWP185

Valeo 506026

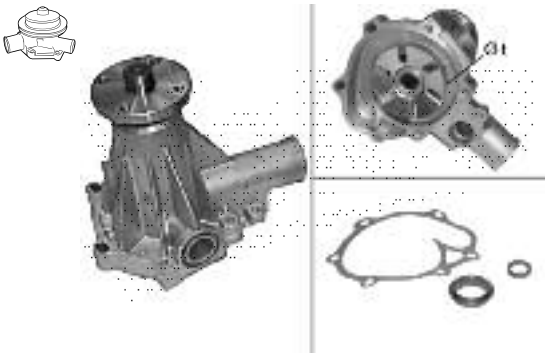

VOLVO 2706810

Valeo 506028

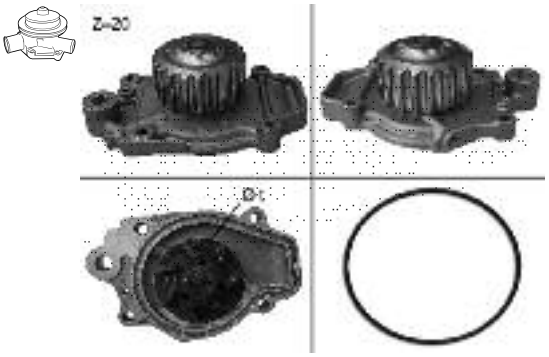

HONDA 19200PE0515

Valeo 506029

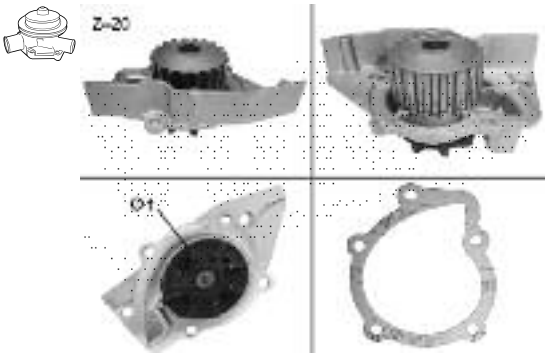

PEUGEOT 120161

Valeo 506030

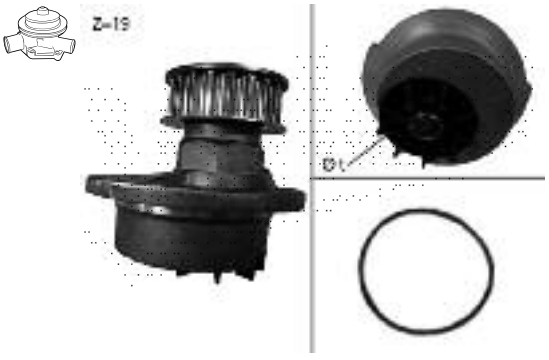

VAUXHALL 90349240

Valeo 506031

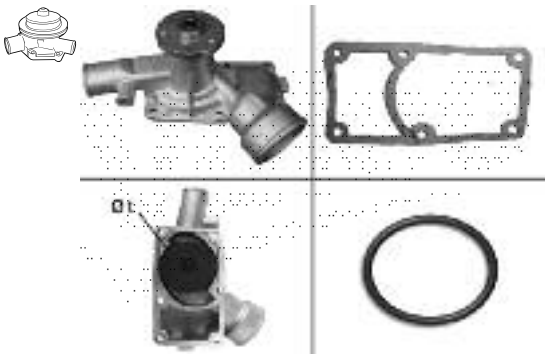

VAUXHALL 90409912

Valeo 506032

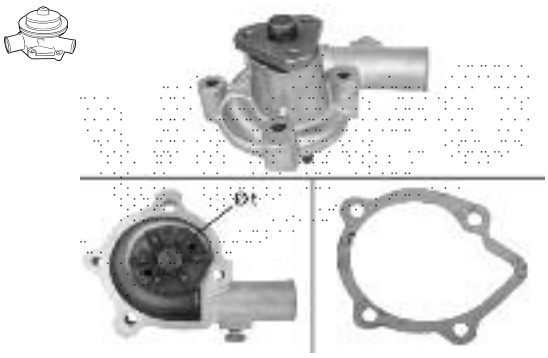

CITROËN 97521368

Valeo 506033

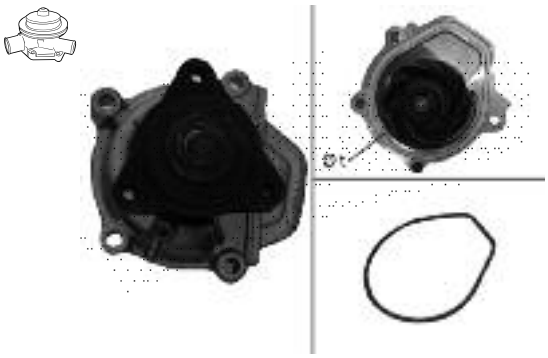

HONDA 19200PA1405

Valeo 506035

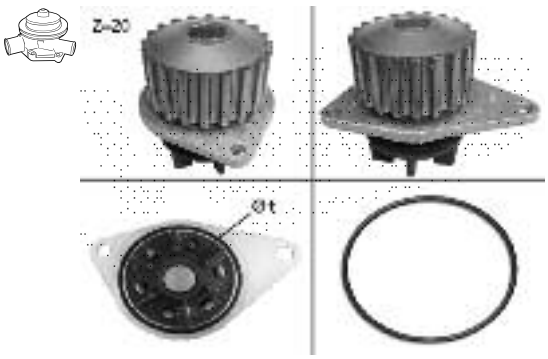

ROVER GWP341

Valeo 506036

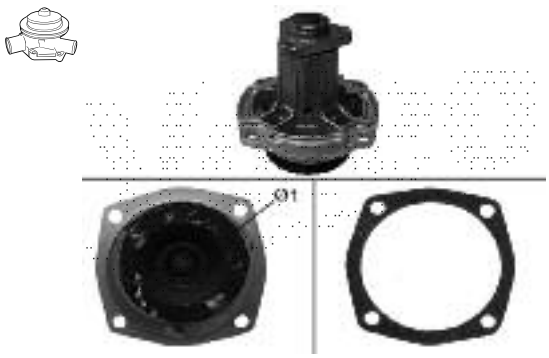

ALFA ROMEO 60624553

Valeo 506037

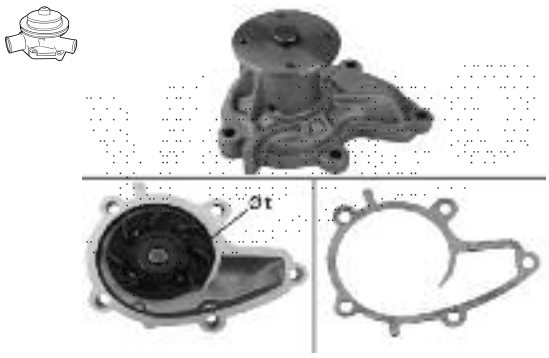

NISSAN 2101006E25

Valeo 506040

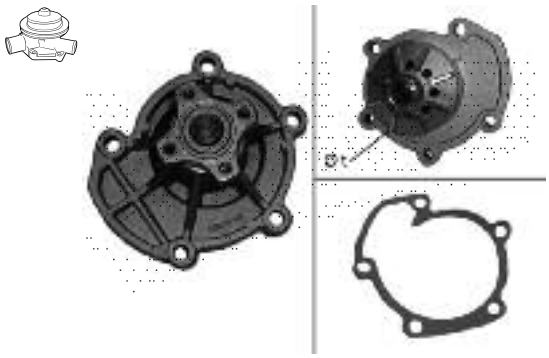

SAAB 7507460

Valeo 506041

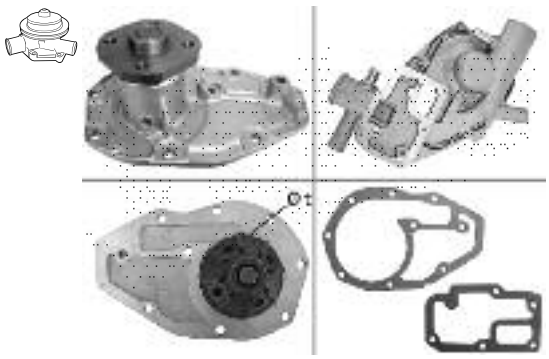

DACIA 6000039201

Valeo 506043

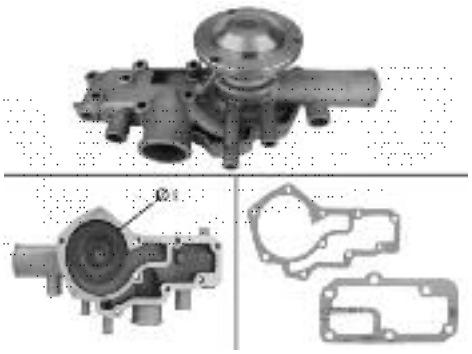

RENAULT 7701462389

Valeo 506044

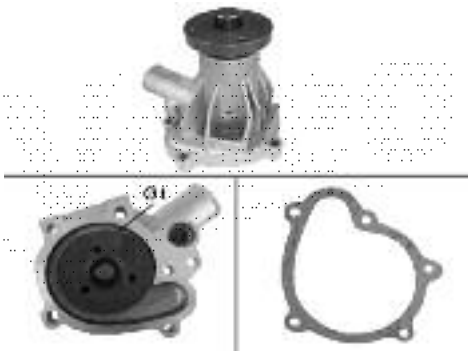

VOLVO 2719755

Valeo 506045

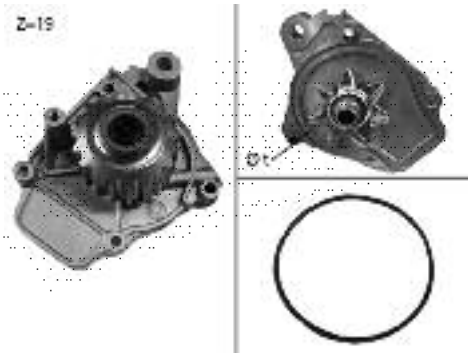

ROVER GWP2163

Valeo 506046

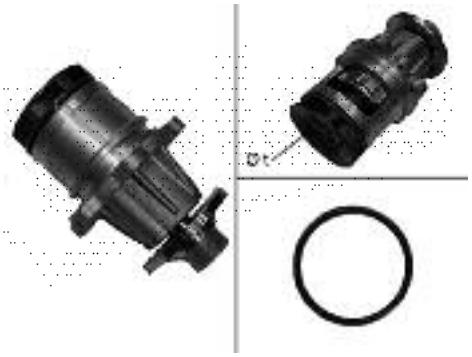

BMW 11511715292

Valeo 506047

FORD 7087382

Valeo 506048

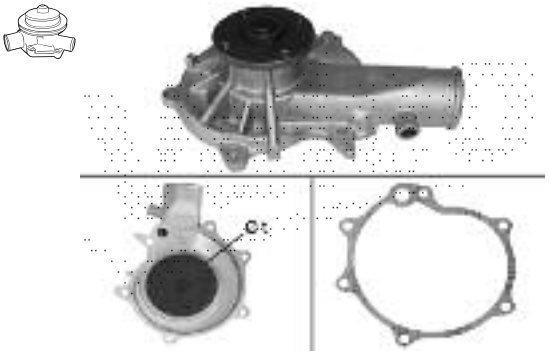

VAUXHALL 93170697

Valeo 506050

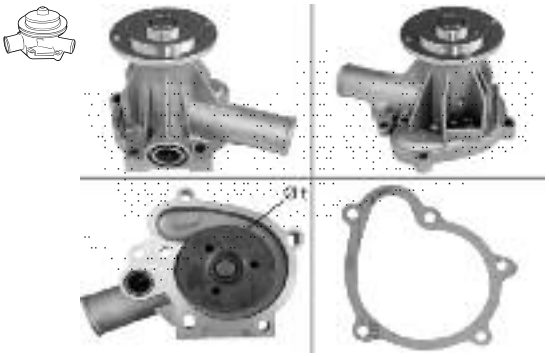

VOLVO 13360292

Valeo 506052

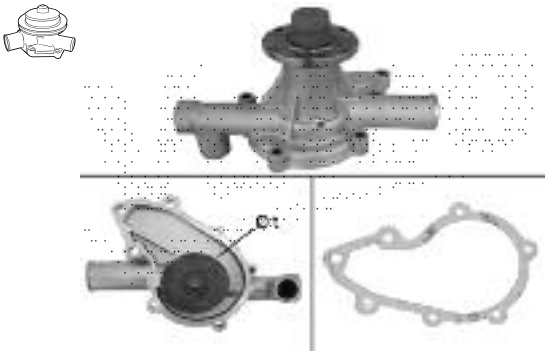

BMW 11519070755

Valeo 506057

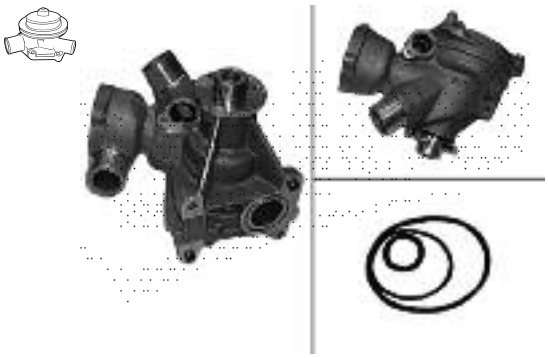

MERCEDES 1032001801

Valeo 506058

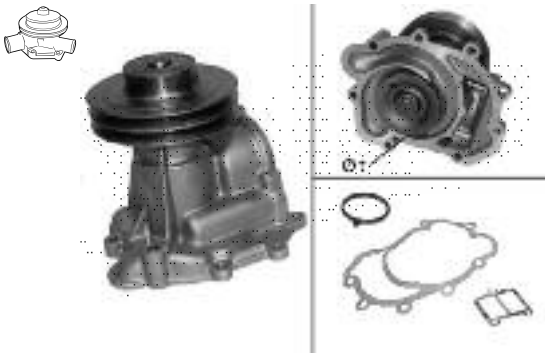

MERCEDES 1172003301

Valeo 506059

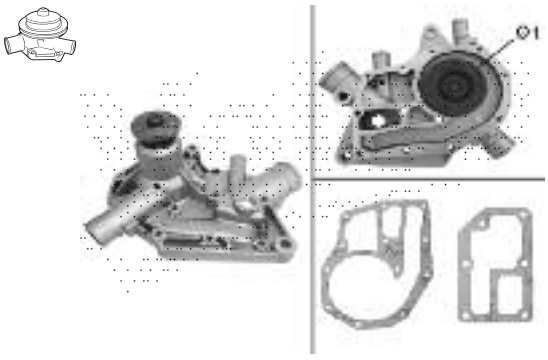

RENAULT 7701457671

Valeo 506060

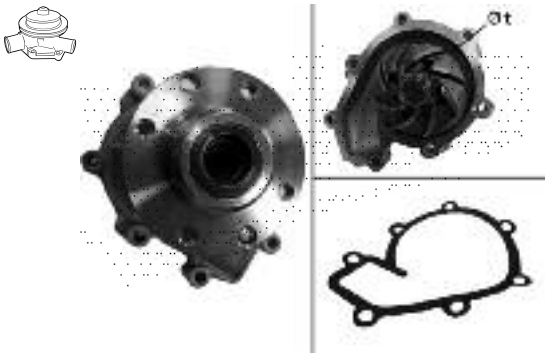

MERCEDES 6022000520

Valeo 506061

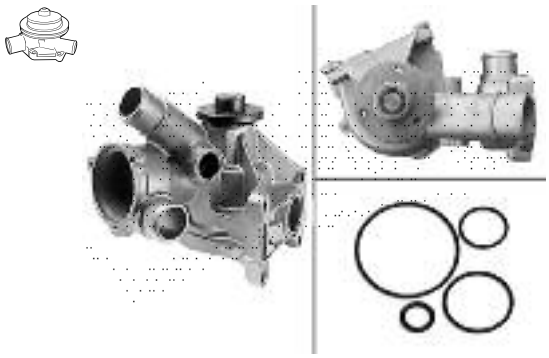

MERCEDES 1032003701

Valeo 506063

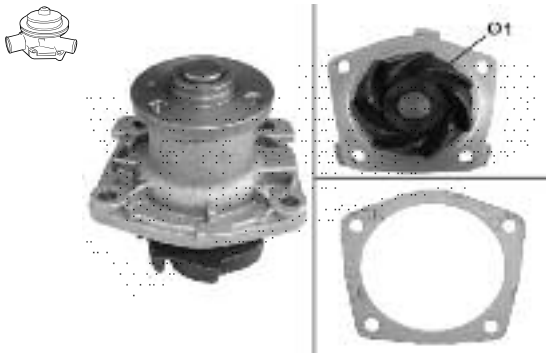

FIAT 5890406

Valeo 506066

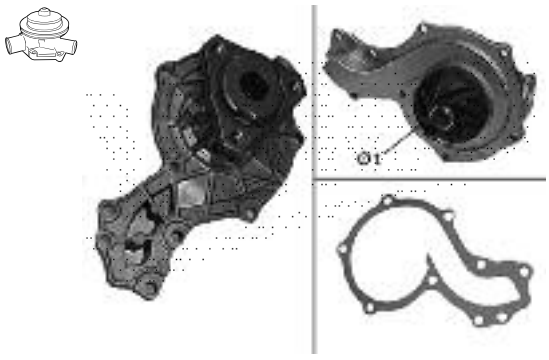

AUDI 068121005B

Valeo 506069

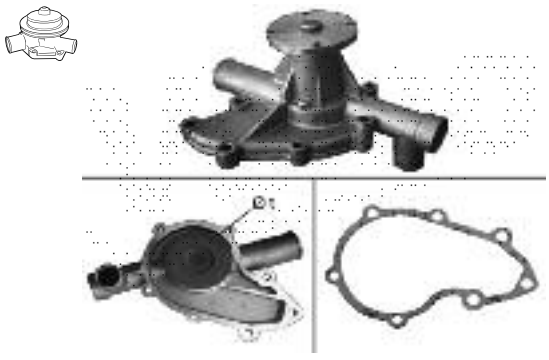

BMW 11511258933

Valeo 506070

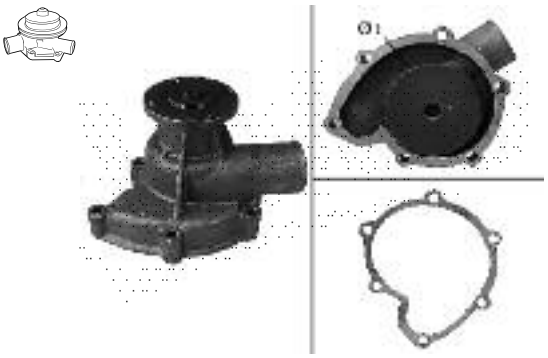

BMW 11519070757

Valeo 506072

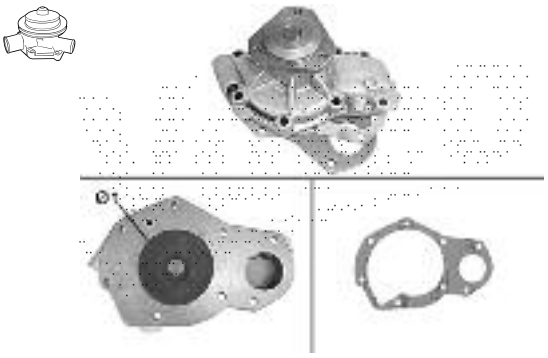

RENAULT 7701467223

Valeo 506073

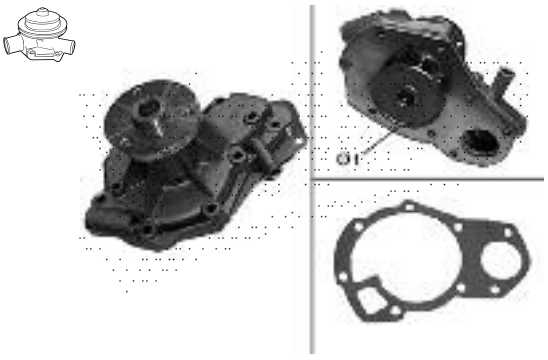

RENAULT 7701461006

Valeo 506074

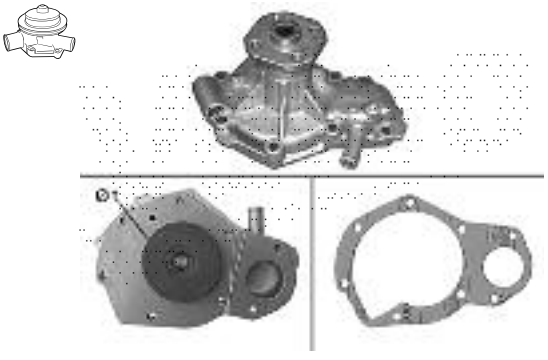

RENAULT 7701461336

Valeo 506075

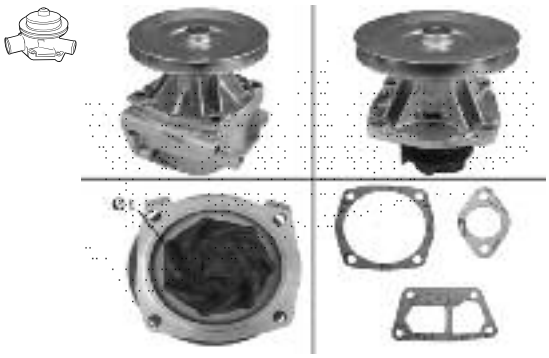

LANCIA 5894580

Valeo 506076

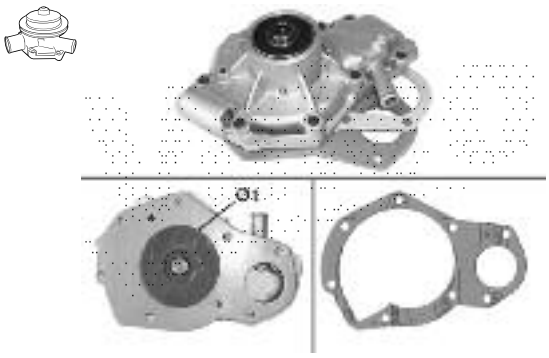

RENAULT 7701463182

Valeo 506078

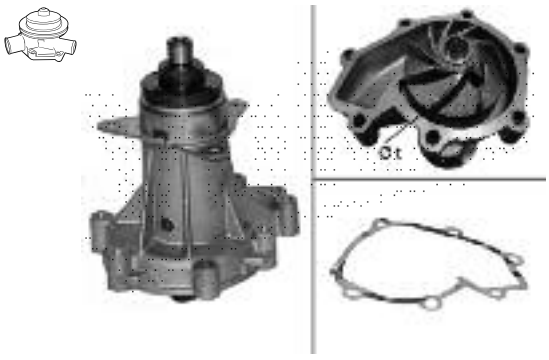

MERCEDES 6012000920

Valeo 506079

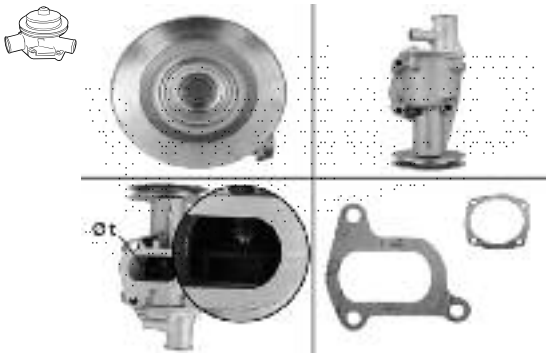

FIAT 5939200

Valeo 506080

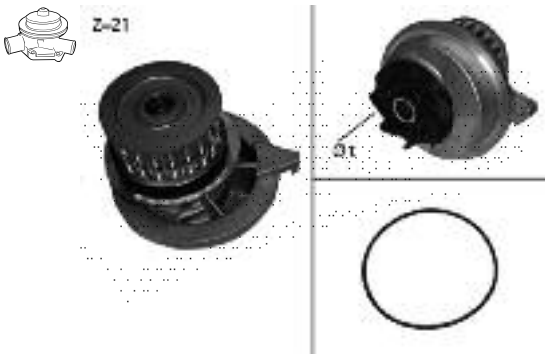

OPEL 1334038

Valeo 506081

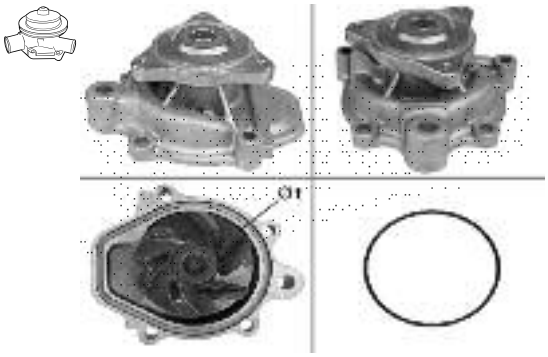

HONDA 19200PB2000

Valeo 506084

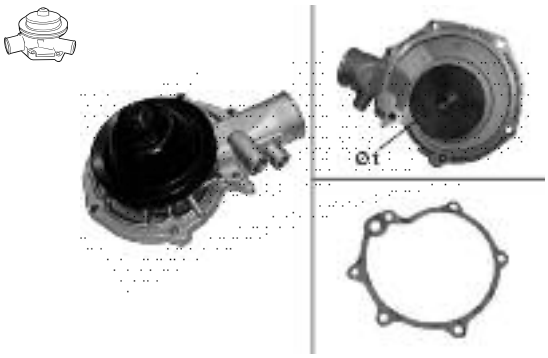

OPEL 1334021

Valeo 506085

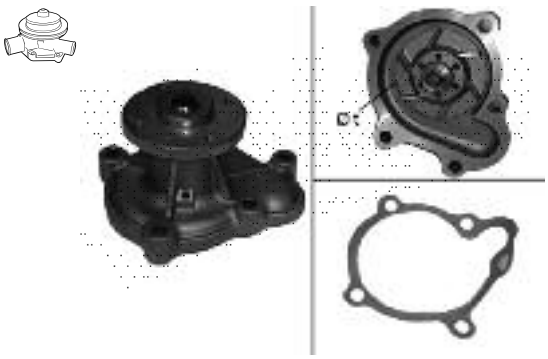

VAUXHALL 94124093

Valeo 506086

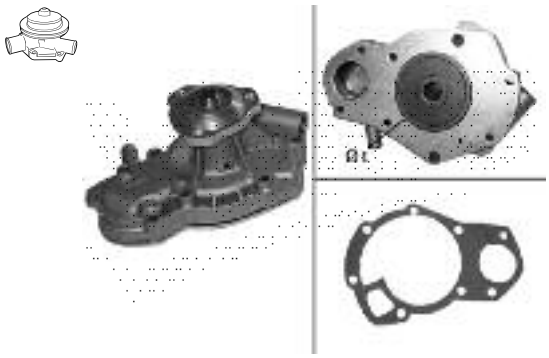

RENAULT 7701464538

Valeo 506087

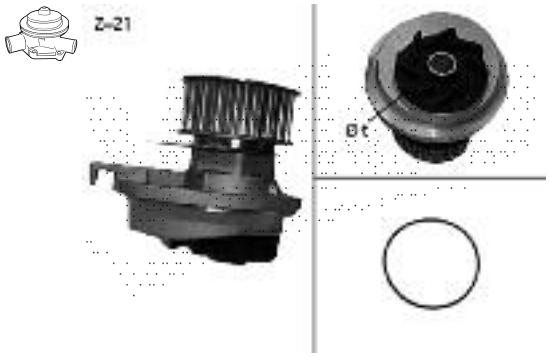

VAUXHALL 90295078

Valeo 506088

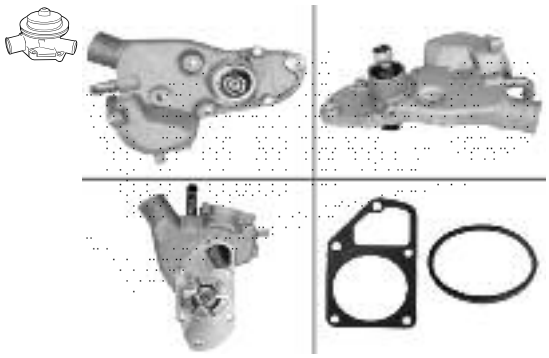

PEUGEOT 120176

Valeo 506089

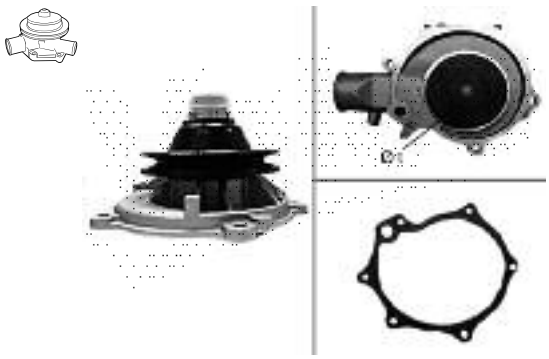

OPEL 1334097

Valeo 506091

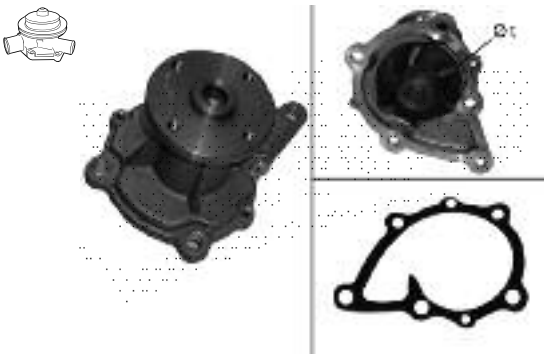

NISSAN 21010M6626

Valeo 506092

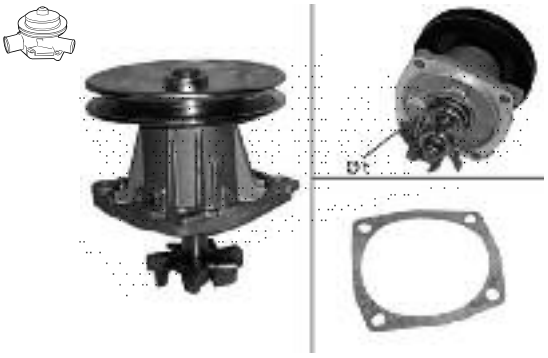

FIAT 5894580

Valeo 506095

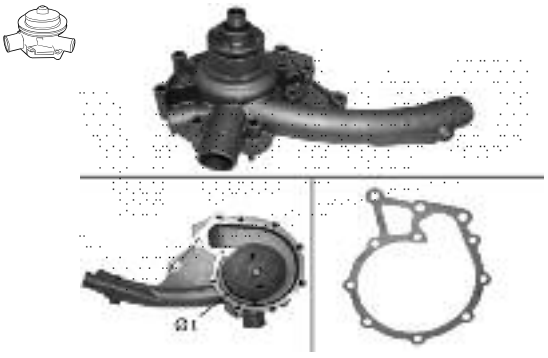

MERCEDES 1022004201

Valeo 506097

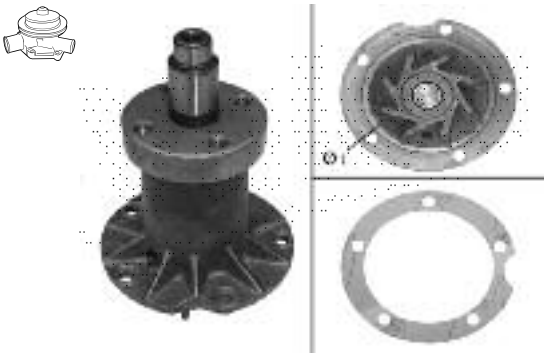

MERCEDES 1102001920

Valeo 506098

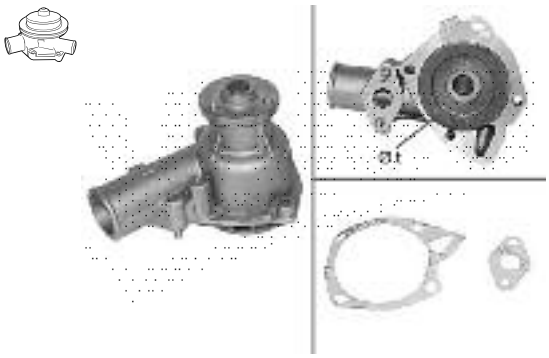

FIAT 5882689

Valeo 506099

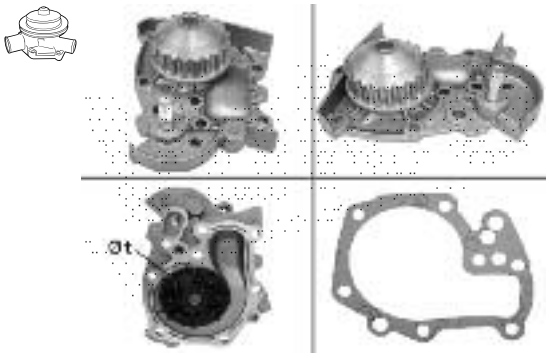

RENAULT 7701633125

Valeo 506100

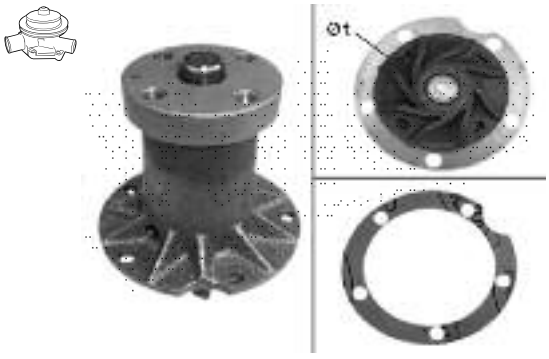

MERCEDES 1102001720

Valeo 506101

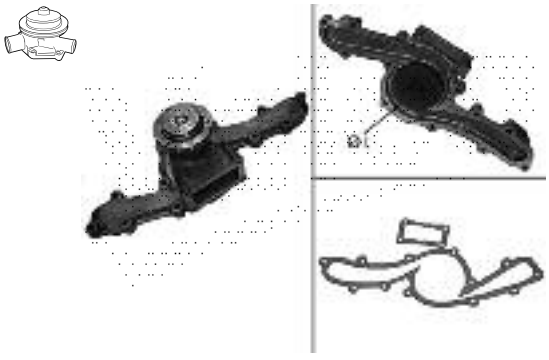

ALFA ROMEO 0060555347

Valeo 506102

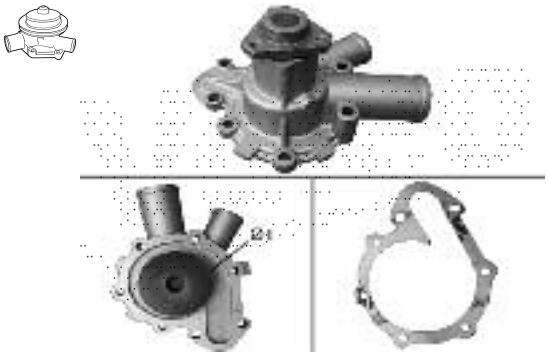

ALFA ROMEO 0060565229

Valeo 506105

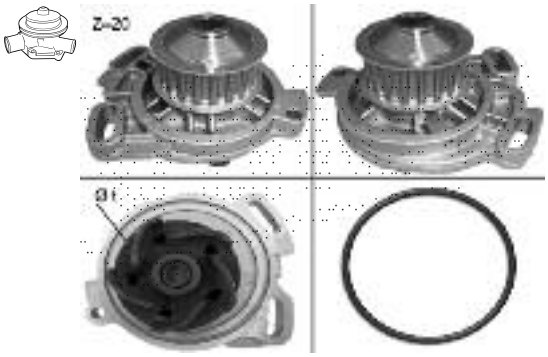

AUDI 069121005D

Valeo 506106

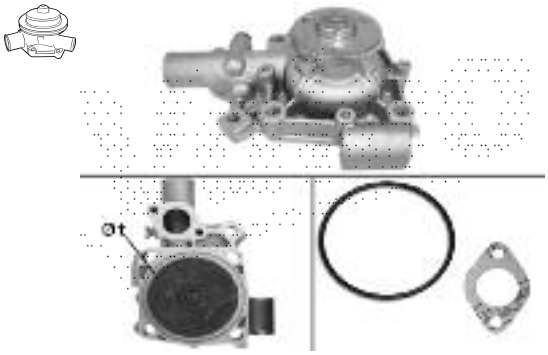

OPEL 4404088

Valeo 506107

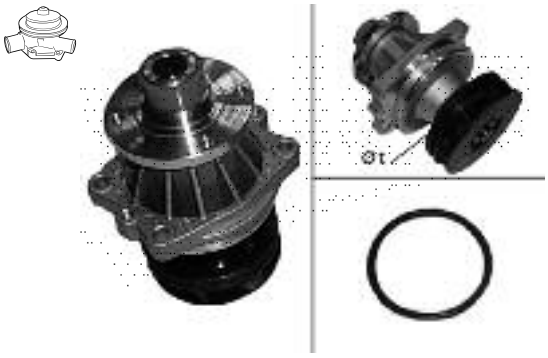

BMW 11517527910

Valeo 506108

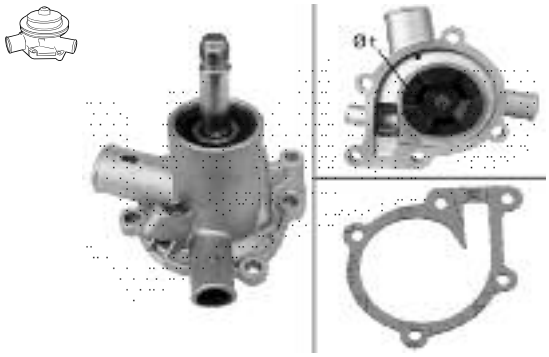

PEUGEOT 120267

Valeo 506109

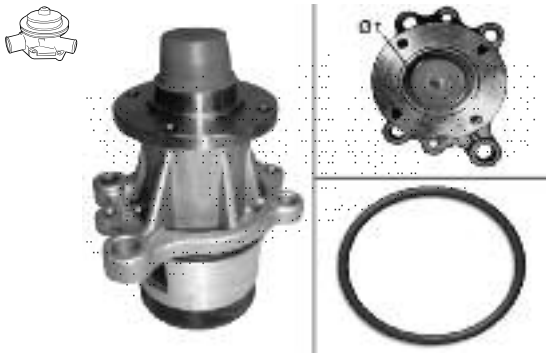

BMW 11511734602

Valeo 506110

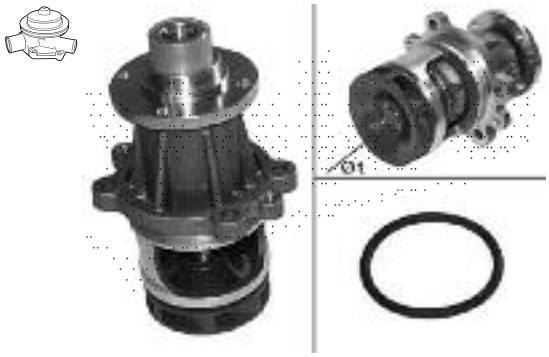

BMW 11510007039

Valeo 506114

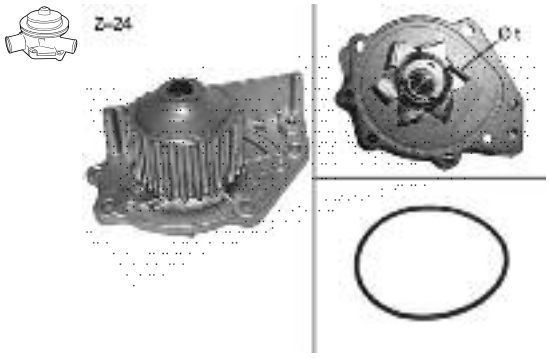

ROVER PEB10051

Valeo 506115

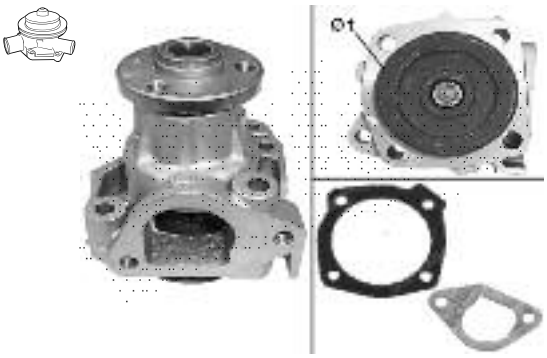

FIAT 7703893

Valeo 506117

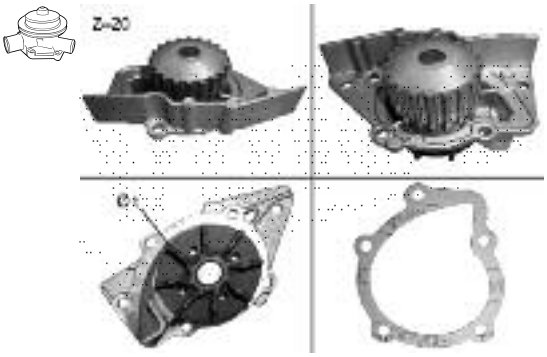

CITROËN 1201A4

Valeo 506119

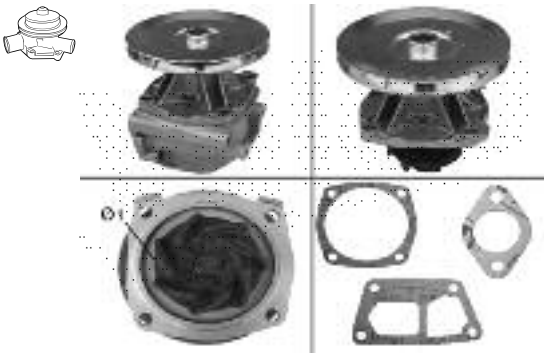

FIAT 7784975

Valeo 506122

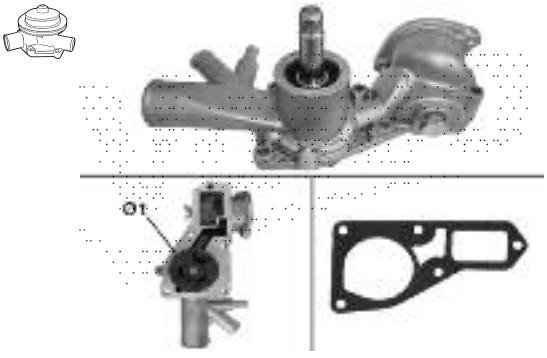

PEUGEOT 120189

Valeo 506123

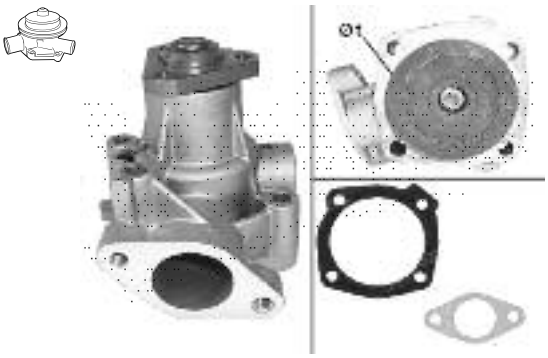

LANCIA 7747386

Valeo 506127

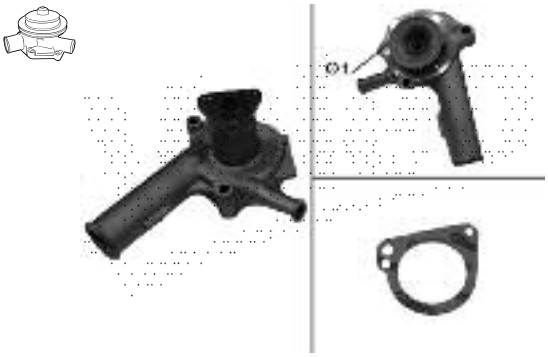

FORD 6683522

Valeo 506130

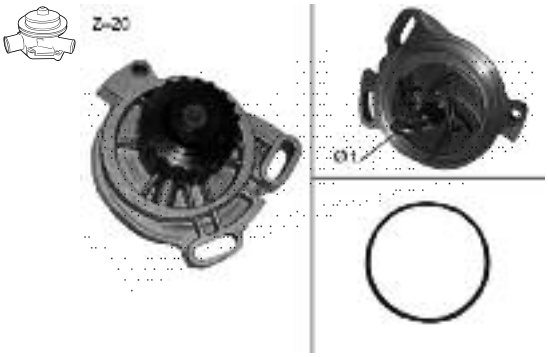

AUDI 046121004

Valeo 506132

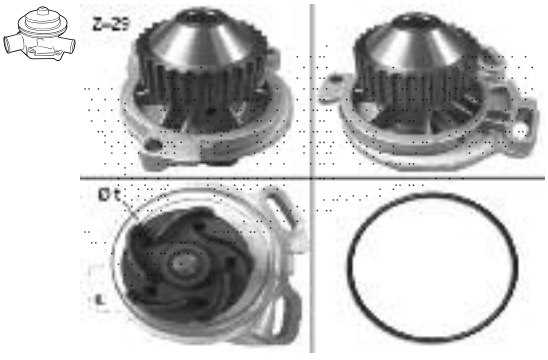

AUDI 034121004X

Valeo 506133

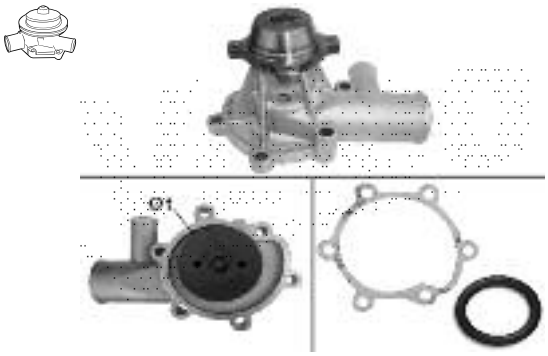

SAAB 8817918

Valeo 506134

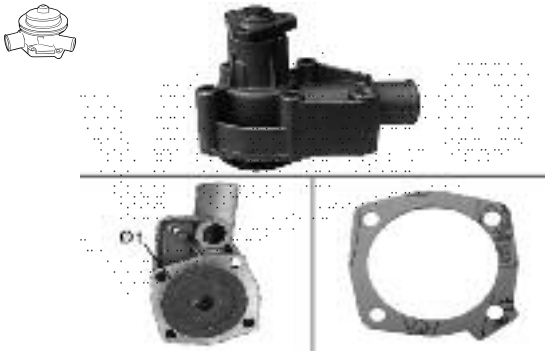

LANCIA 5973319

Valeo 506141

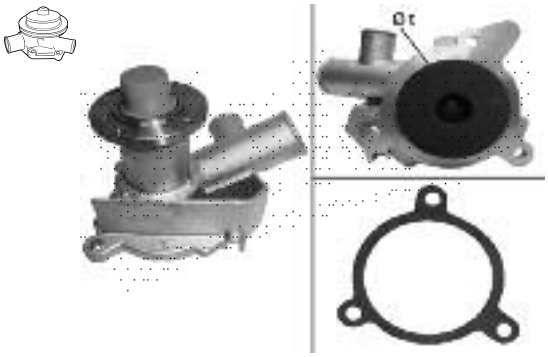

BMW 11511706588

Valeo 506143

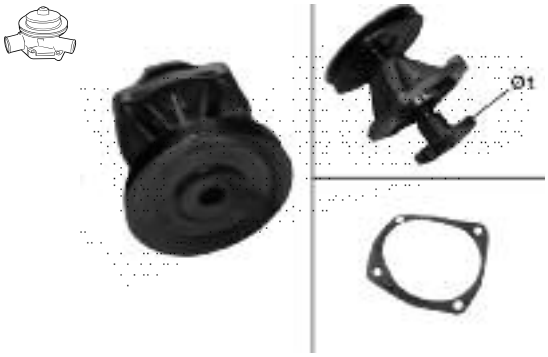

FIAT 5894582

Valeo 506144

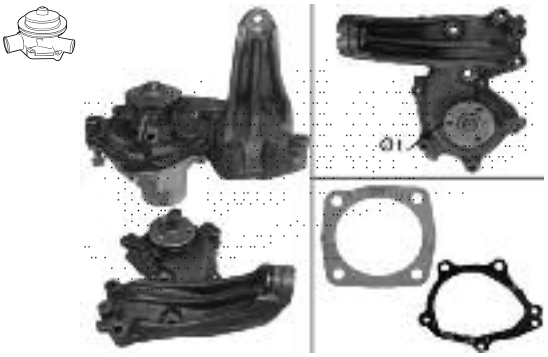

FIAT 46409134

Valeo 506148

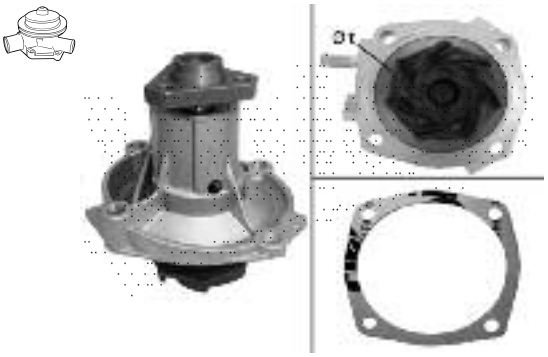

LADA 21011307010

Valeo 506151

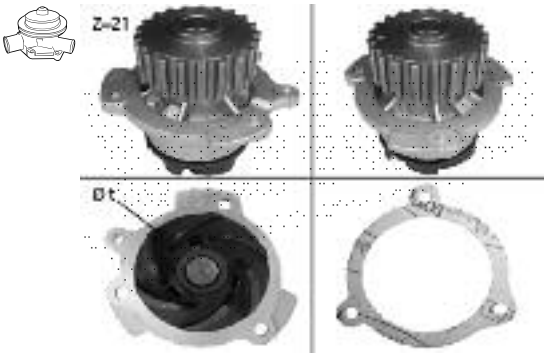

LADA 21081307010

Valeo 506153

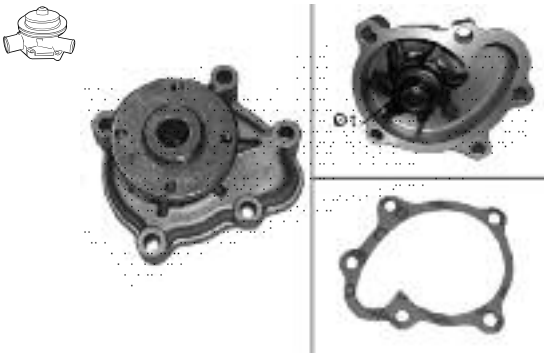

VAUXHALL R1160037

Valeo 506155

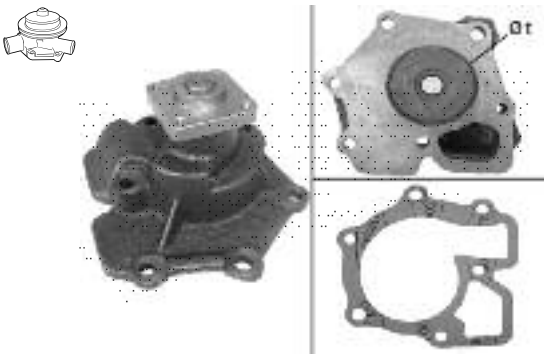

FORD 5024545

Valeo 506158

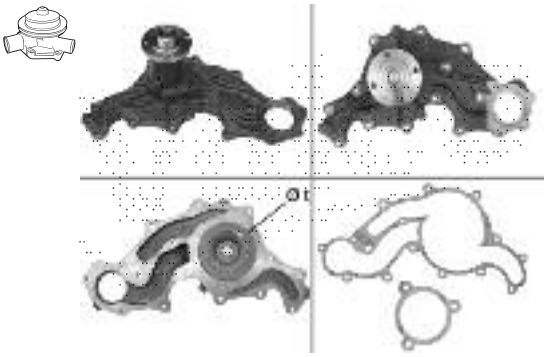

FORD 5011846

Valeo 506165

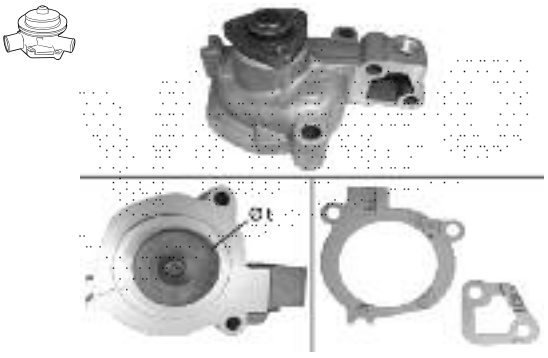

FORD 5023817

Valeo 506167

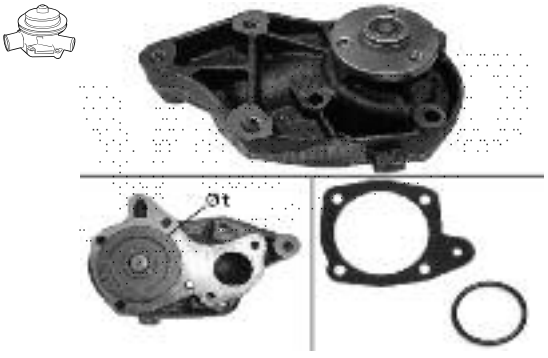

FIAT 7574887

Valeo 506169

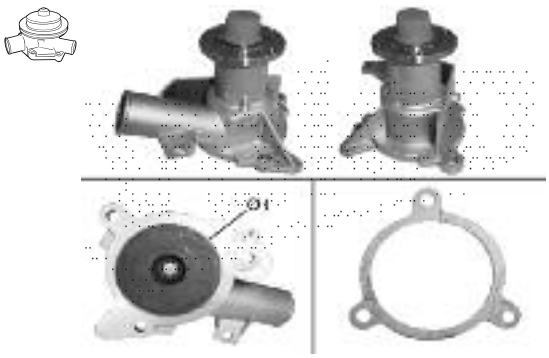

BMW 11519070759

Valeo 506170

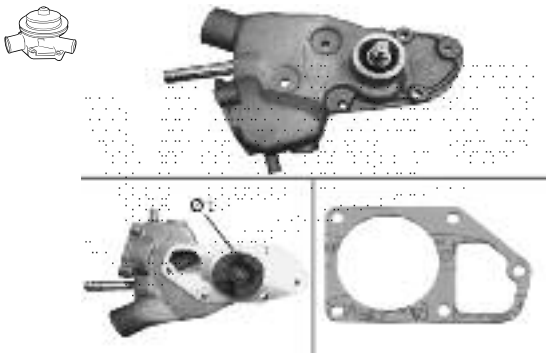

PEUGEOT 120171

Valeo 506173

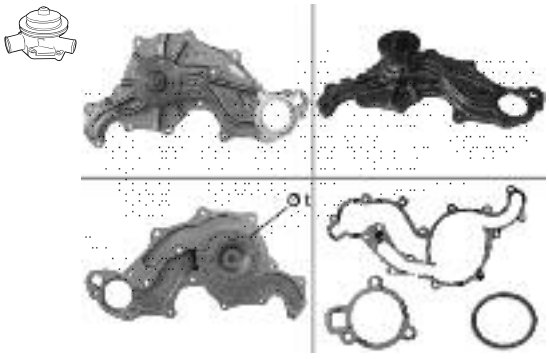

FORD 5005193

Valeo 506178

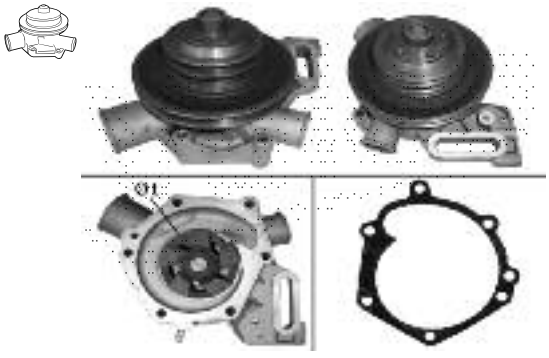

CITROËN 95548541

Valeo 506186

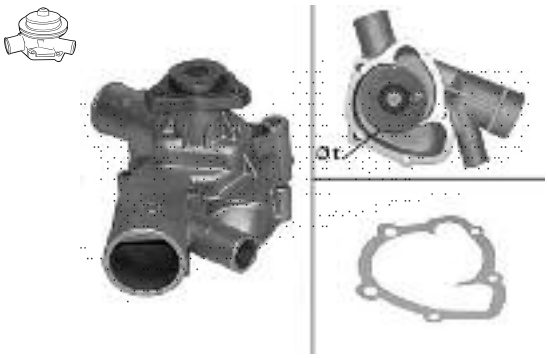

PORSCHE 060121011

Valeo 506189

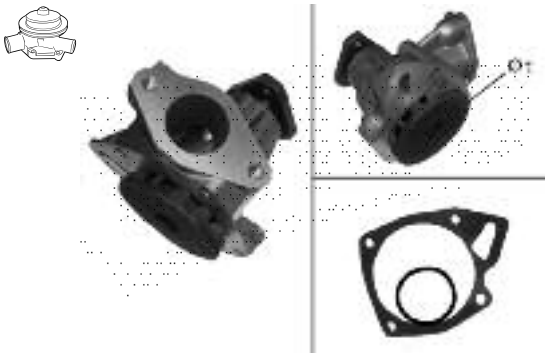

LANCIA 5882696

Valeo 506190

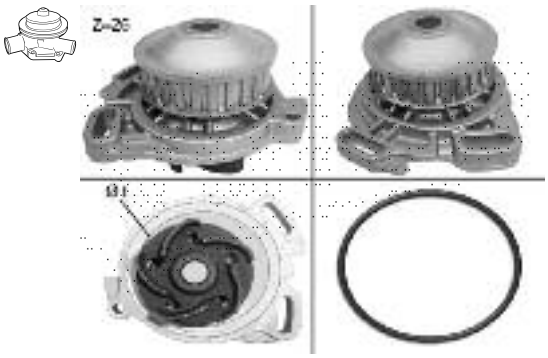

AUDI 035121004AX

Valeo 506227

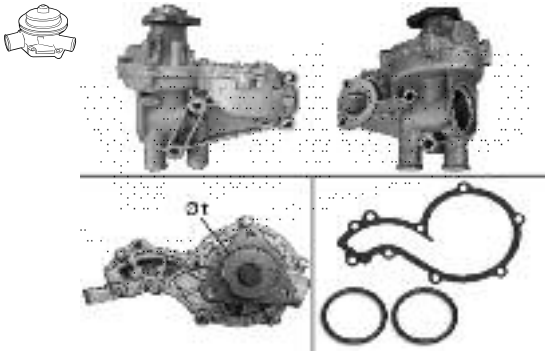

AUDI 068121010

Valeo 506230

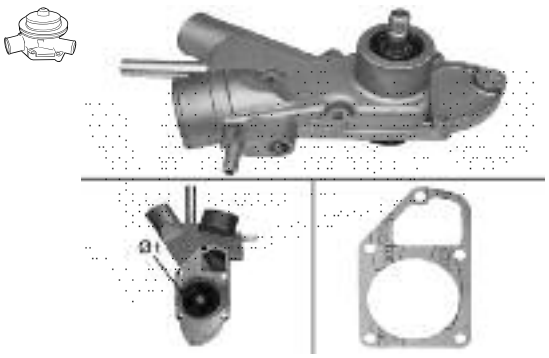

PEUGEOT 120183

Valeo 506240

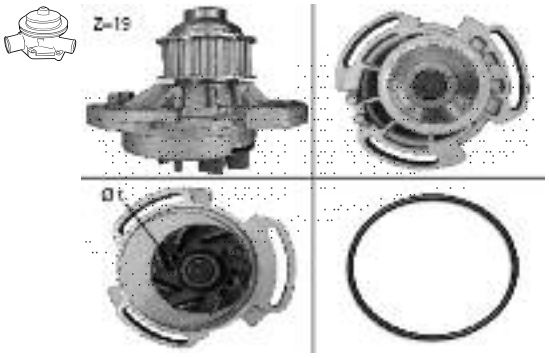

VOLKSWAGEN 031121005CX

Valeo 506245

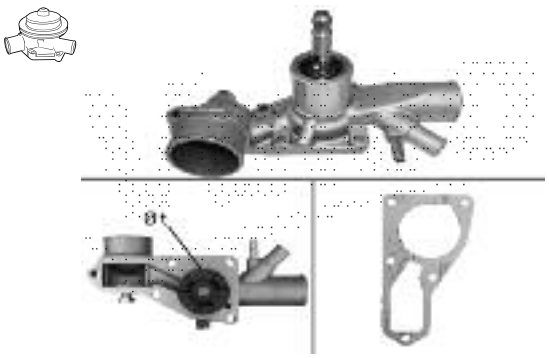

PEUGEOT 120179

Valeo 506247

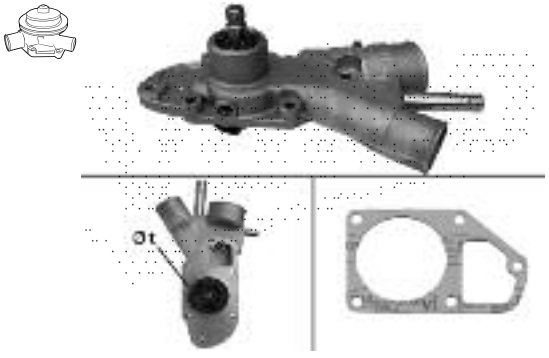

FORD 5004976

Valeo 506248

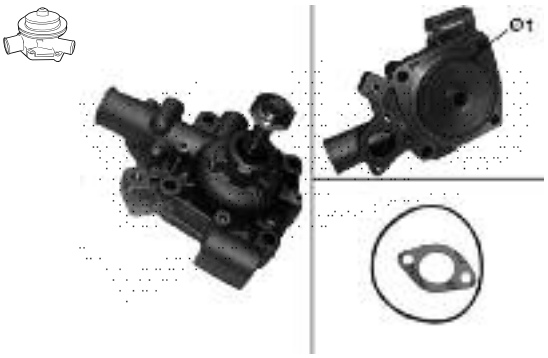

FIAT 7303050

Valeo 506249

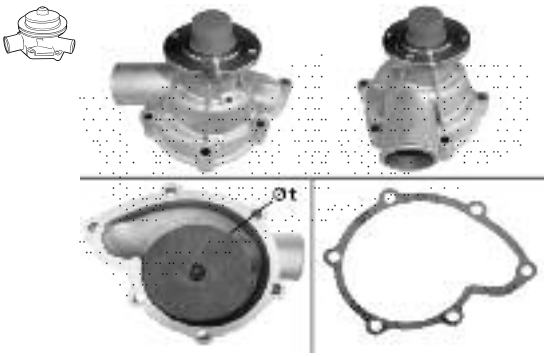

BMW 11519070761

Valeo 506256

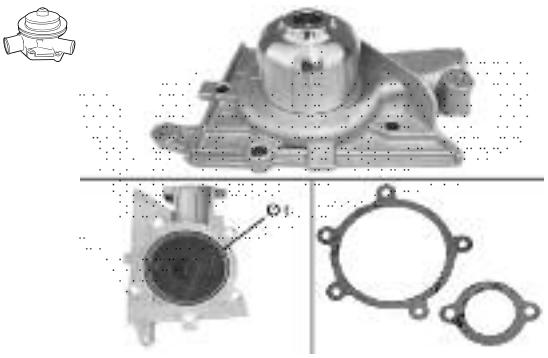

SEAT SE021032000A

Valeo 506259

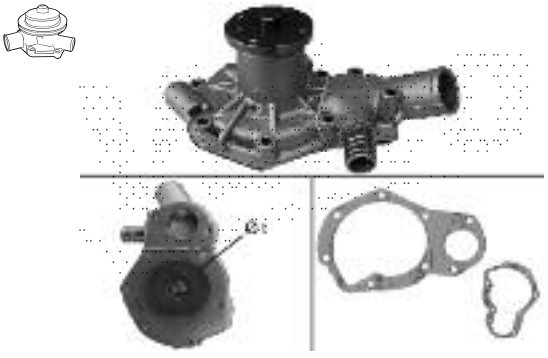

PEUGEOT 120185

Valeo 506266

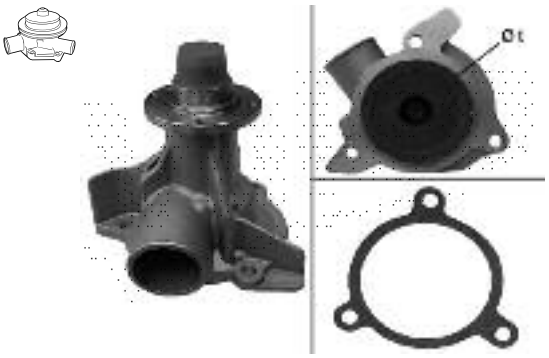

BMW 11512242176

Valeo 506268

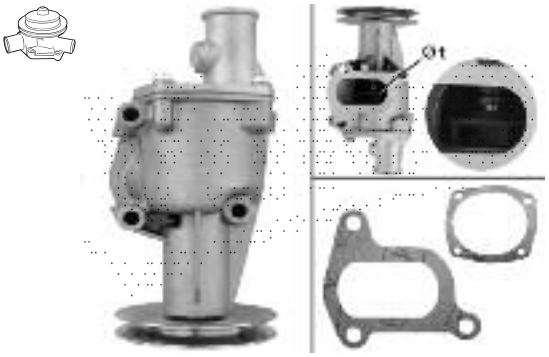

FIAT 7617364

Valeo 506274

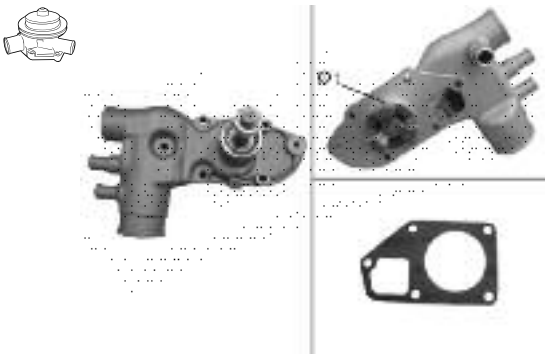

PEUGEOT 120184

Valeo 506278

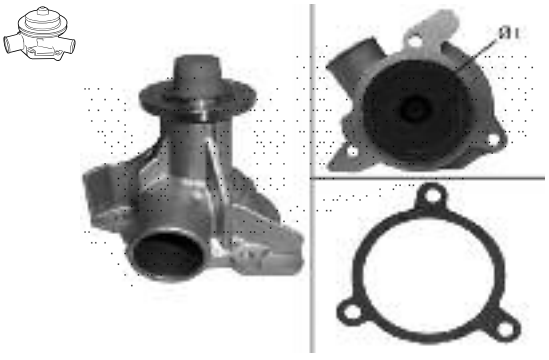

BMW 11519070765

Valeo 506281

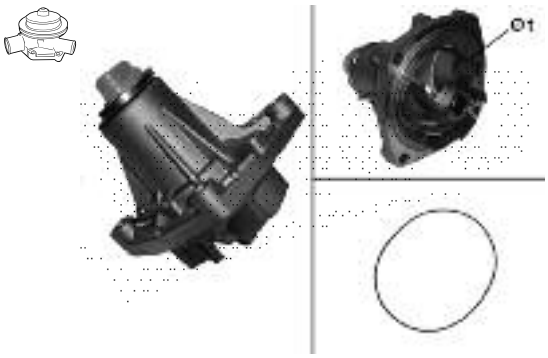

ALFA ROMEO 0060562567

Valeo 506282

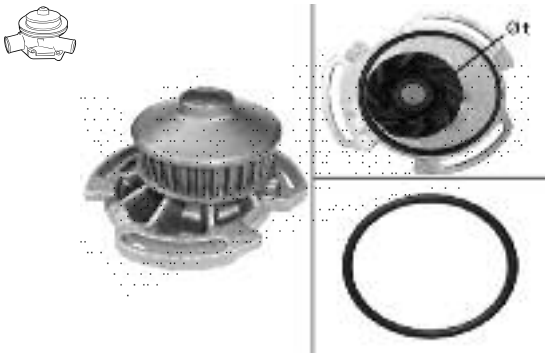

SEAT 030121005LX

Valeo 506283

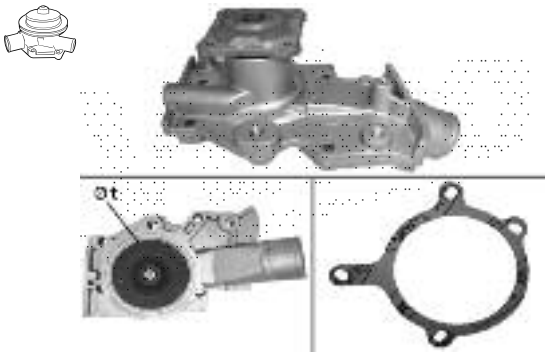

FORD 6878045

Valeo 506284

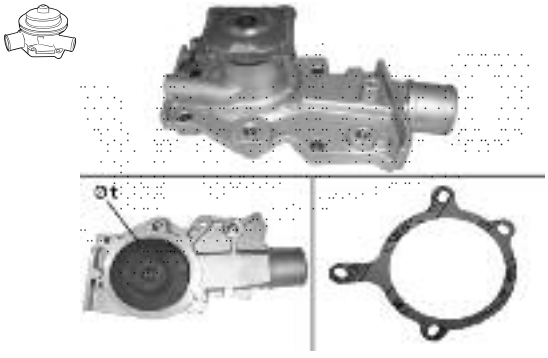

FORD 5025607

Valeo 506285

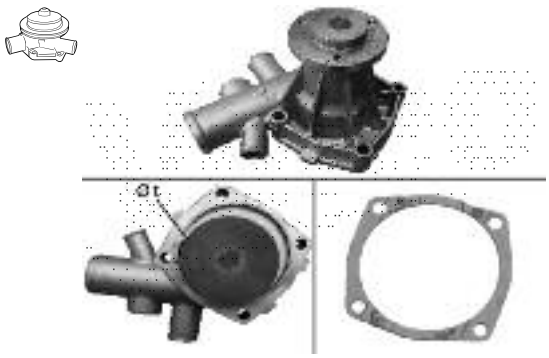

ALFA ROMEO 0060533508

Valeo 506286

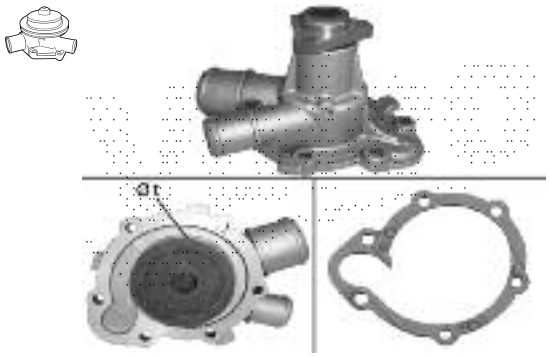

ALFA ROMEO 0060597487

Valeo 506287

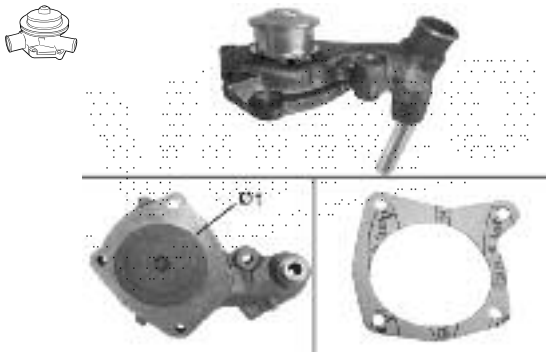

FORD 5028472

Valeo 506289

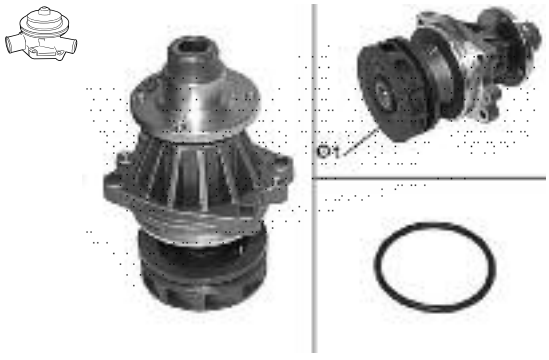

BMW 11519069529

Valeo 506290

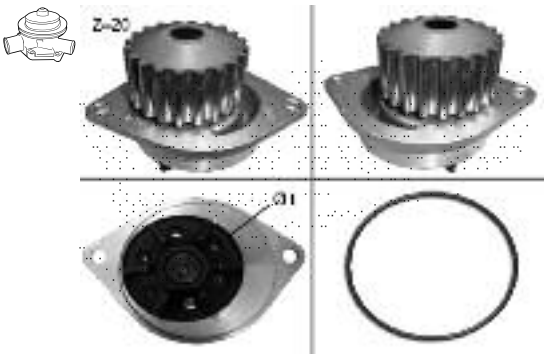

NISSAN 210106F906

Valeo 506291

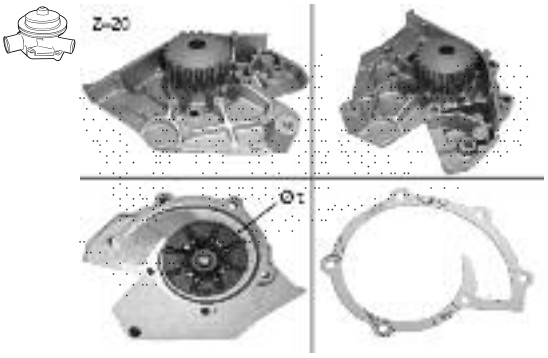

PEUGEOT 1201E0

Valeo 506292

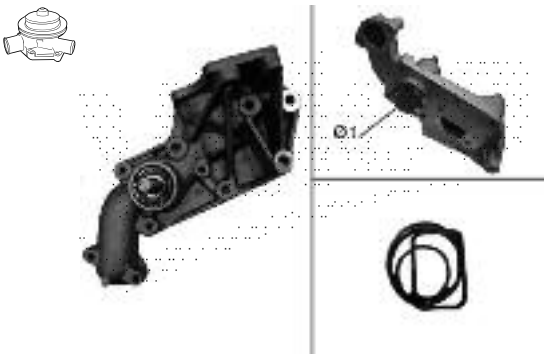

CITROËN 9401201400

Valeo 506293

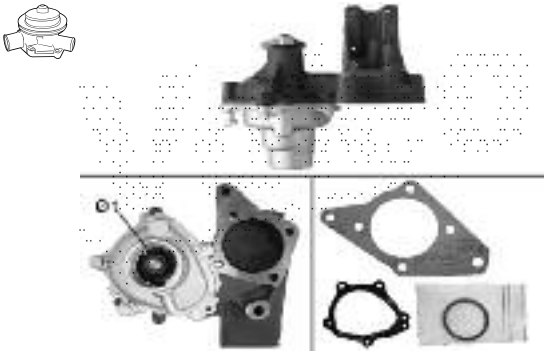

FIAT 46408312

Valeo 506294

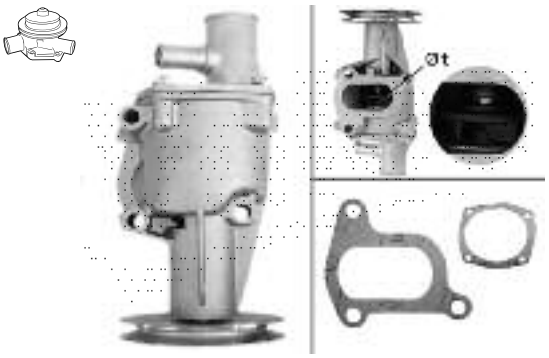

FIAT 46742168

Valeo 506295

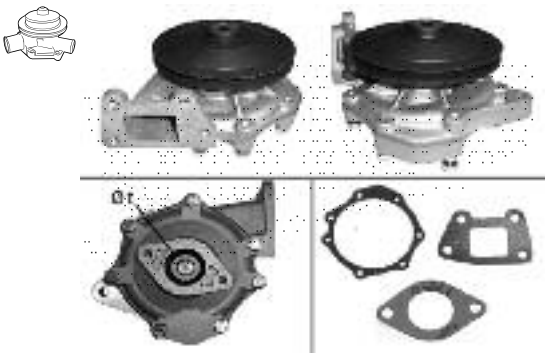

FIAT 98430541

Valeo 506296

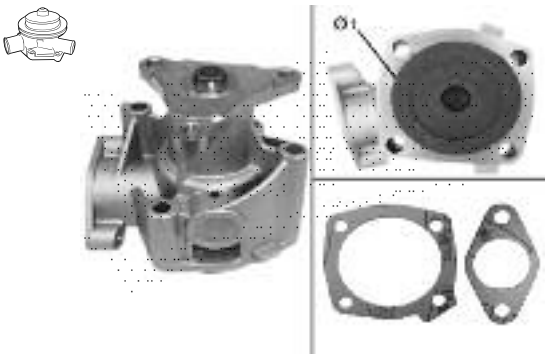

LANCIA 7783006

Valeo 506297

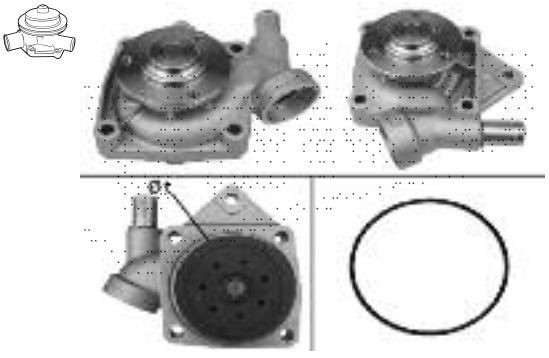

RENAULT 7701467278

Valeo 506298

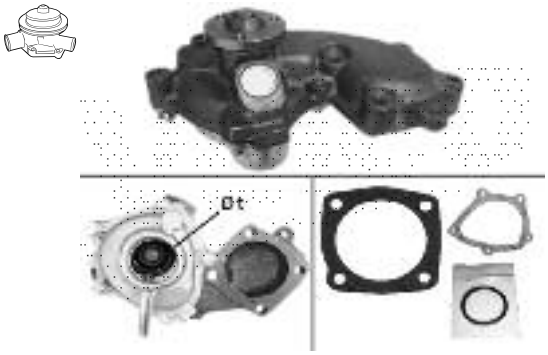

FIAT 46445405

Valeo 506299

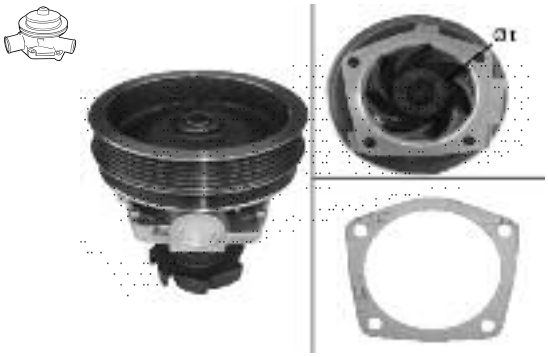

FIAT 7784988

Valeo 506300

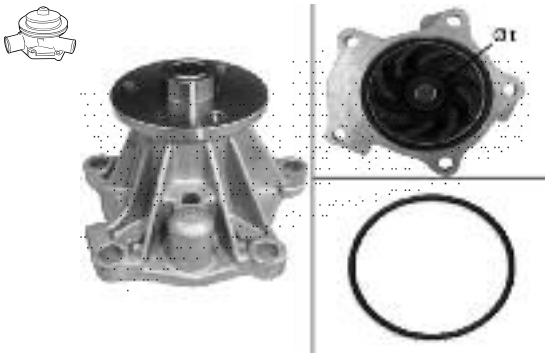

FORD 7087383

Valeo 506301

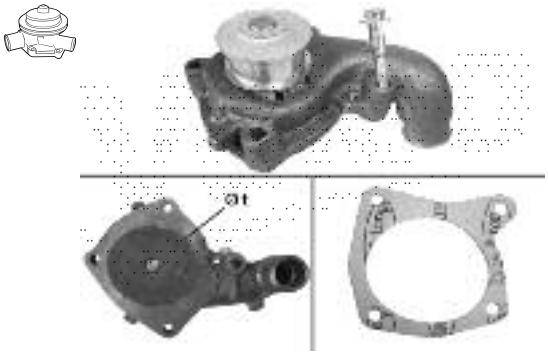

FORD 5024297

Valeo 506302

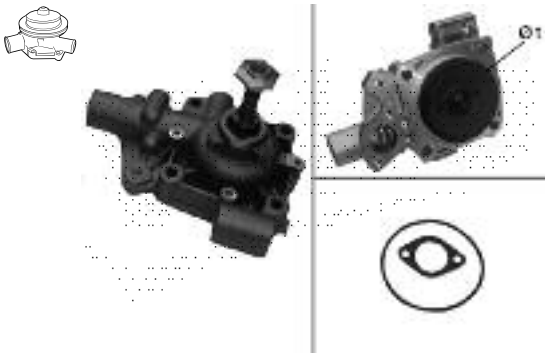

IVECO 98435994

Valeo 506304

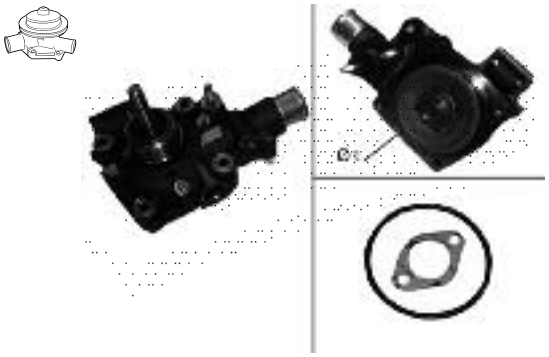

IVECO 500300476

Valeo 506305

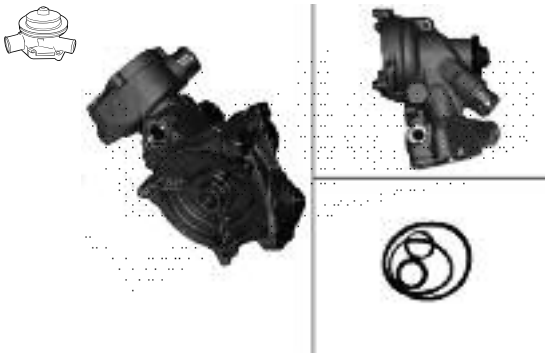

MERCEDES 1042004401

Valeo 506306

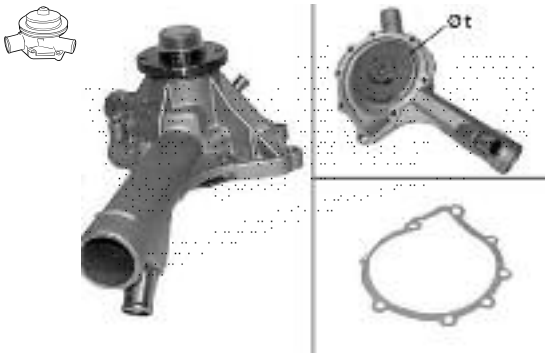

MERCEDES 1112000401

Valeo 506307

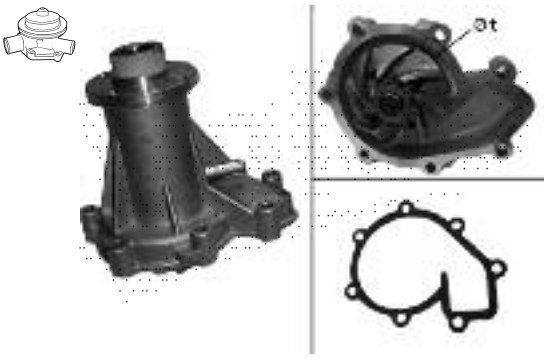

MERCEDES 6012001120

Valeo 506308

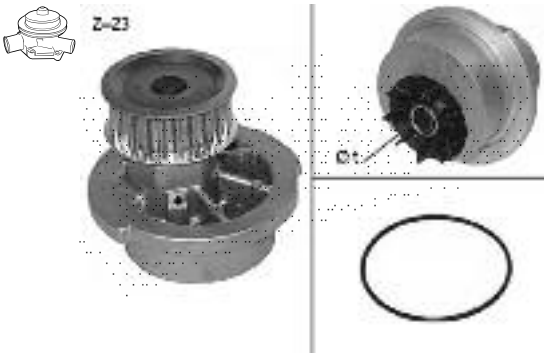

OPEL 1334066

Valeo 506309

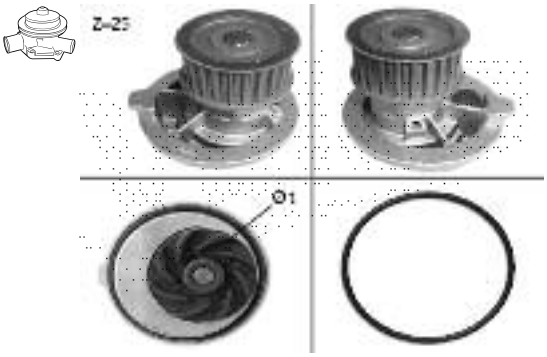

DAEWOO 92064250

Valeo 506310

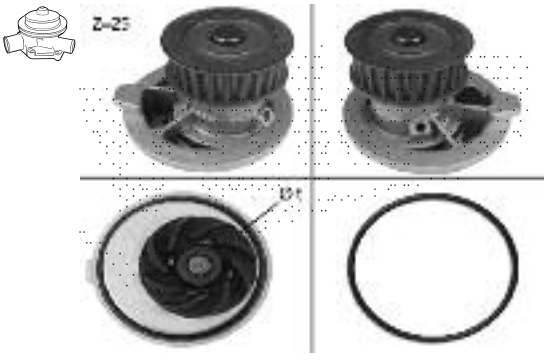

OPEL 1334054

Valeo 506311

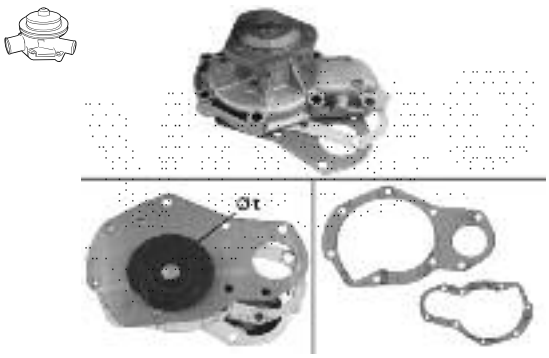

RENAULT 7701465513

Valeo 506312

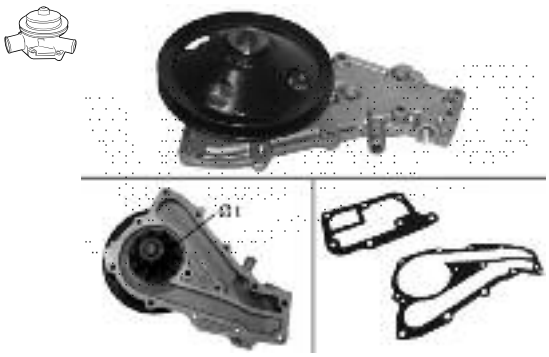

RENAULT 7701467153

Valeo 506314

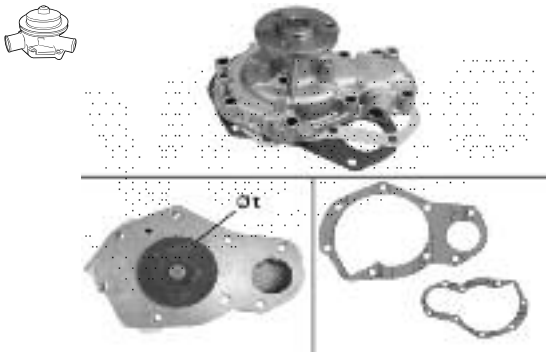

RENAULT 7701466788

Valeo 506315

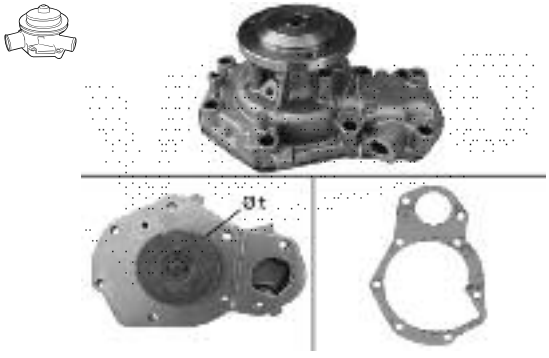

RENAULT 7701466778

Valeo 506316

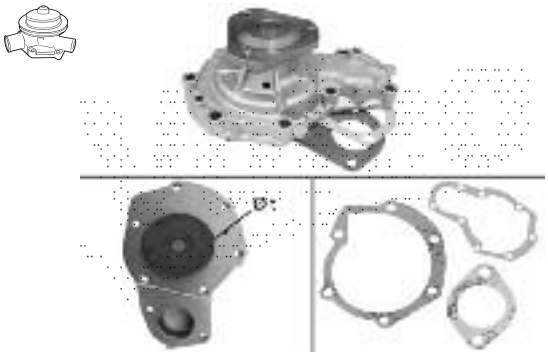

RENAULT 7701466779

Valeo 506317

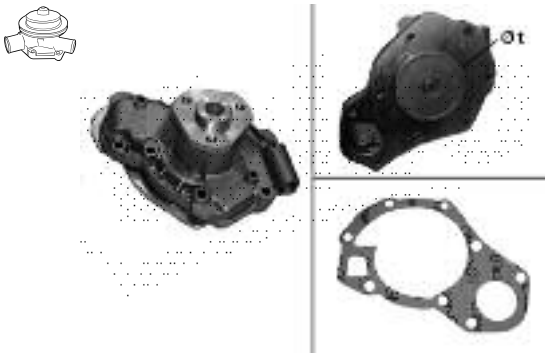

RENAULT 7701466571

Valeo 506320

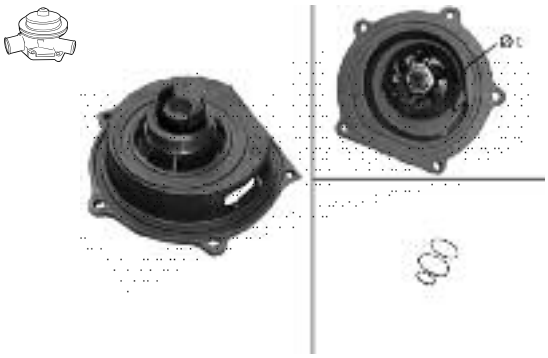

ROVER GWP347

Valeo 506321

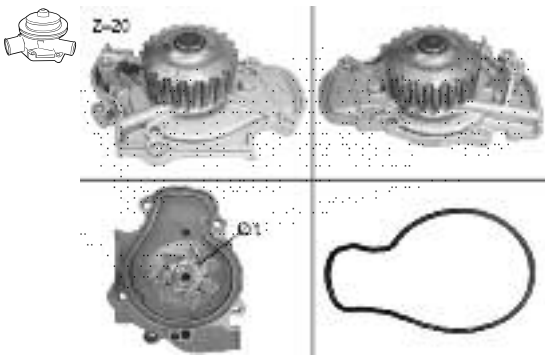

ROVER GWP345

Valeo 506322

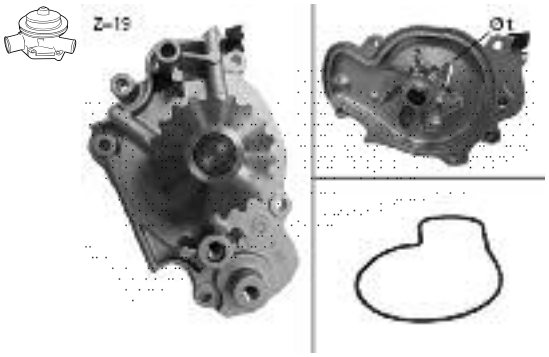

HONDA 19200P14A00

Valeo 506323

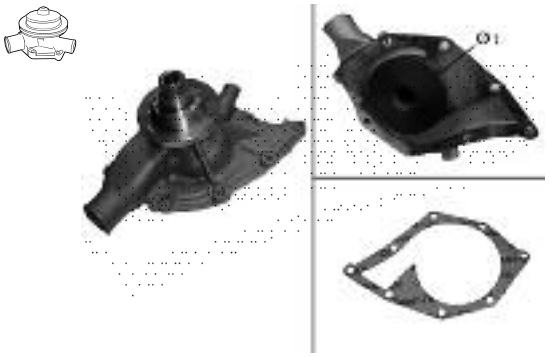

LAND ROVER RTC6395

Valeo 506325

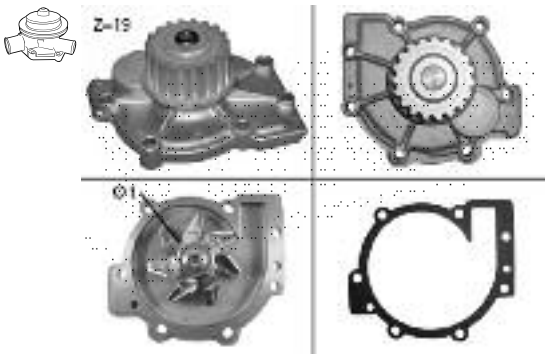

RENAULT 7438610006

Valeo 506327

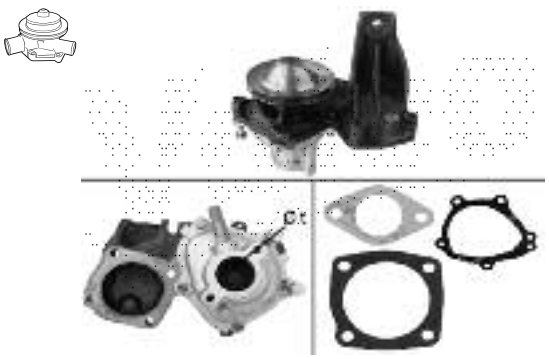

FIAT 5882838

Valeo 506328

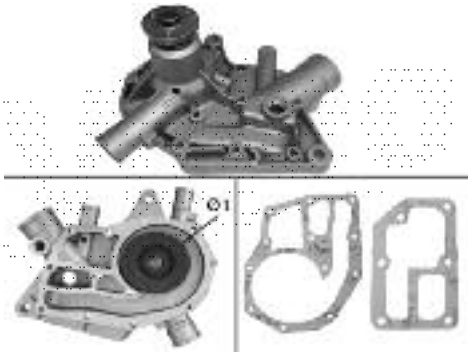

RENAULT 7701460696

Valeo 506330

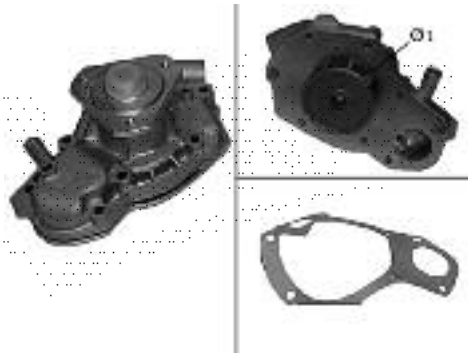

RENAULT 7701463637

Valeo 506331

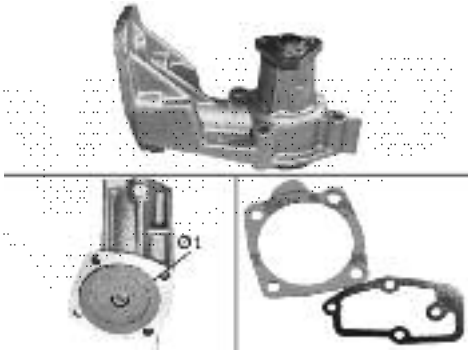

FIAT 7540964

Valeo 506334

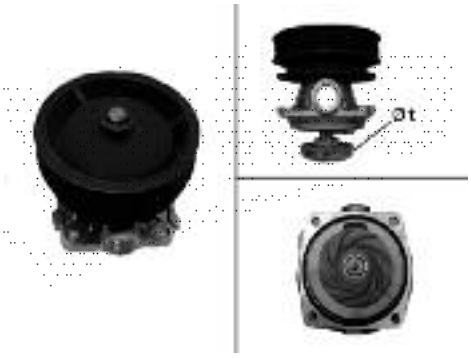

FIAT 46437912

Valeo 506335

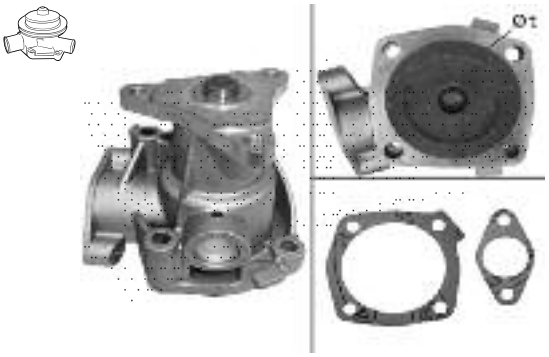

ALFA ROMEO 0060810426

Valeo 506336

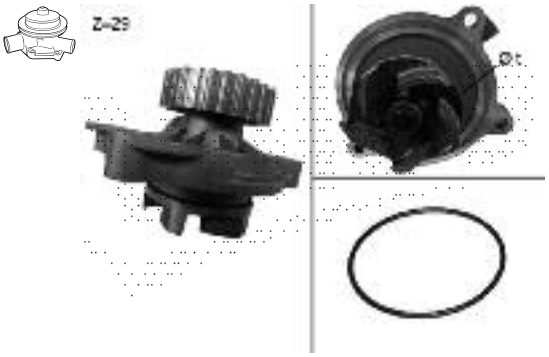

AUDI 054121004A

Valeo 506337

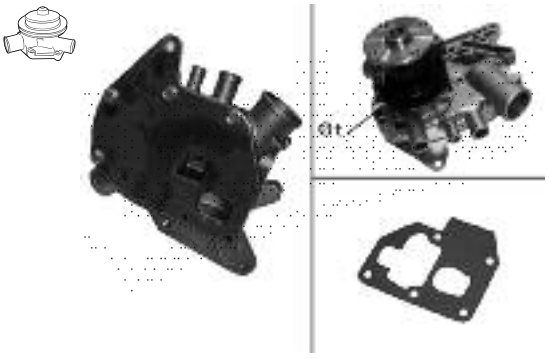

RENAULT 7701461174

Valeo 506340

FIAT 5896809

Valeo 506341

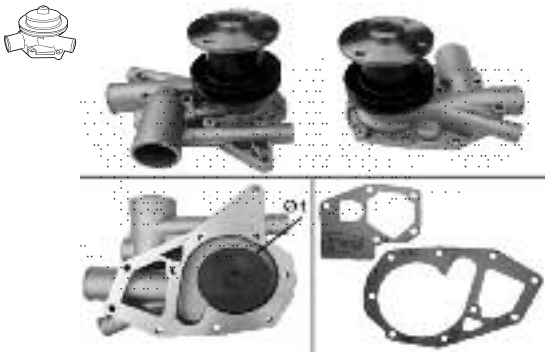

RENAULT 7701461173

Valeo 506343

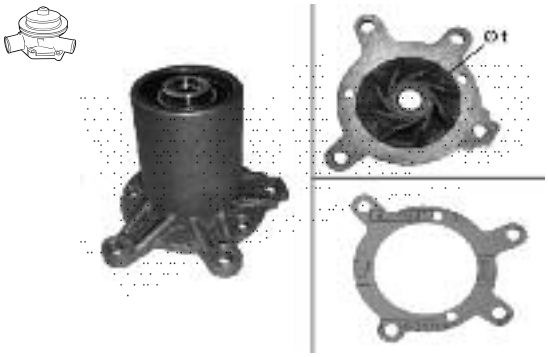

MERCEDES 6162000420

Valeo 506345

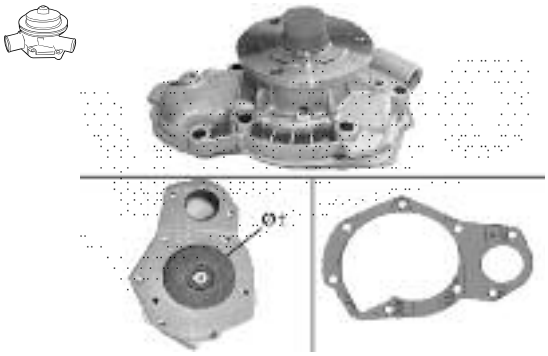

RENAULT 7701465643

Valeo 506346

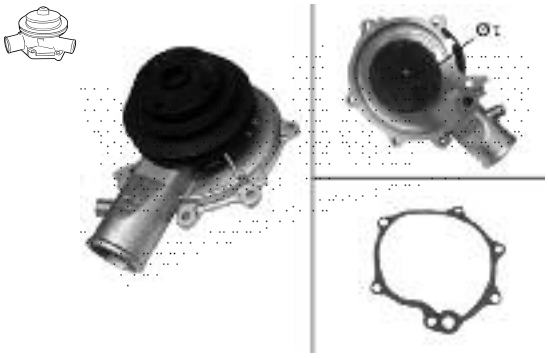

VAUXHALL 97105012

Valeo 506347

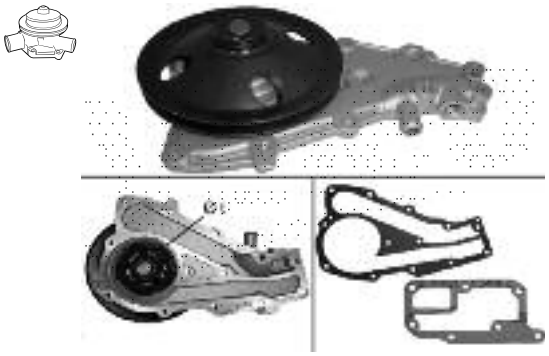

RENAULT 7701466419

Valeo 506352

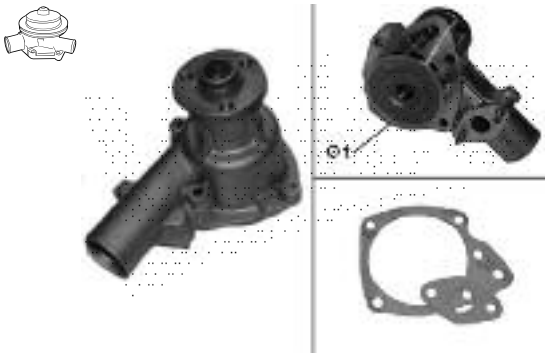

FIAT 4332090

Valeo 506357

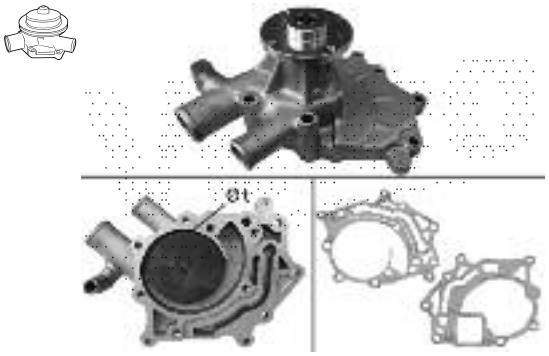

NISSAN 21010G5586

Valeo 506358

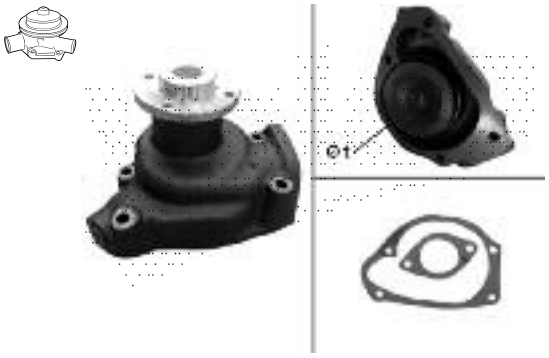

NISSAN 741001122

Valeo 506360

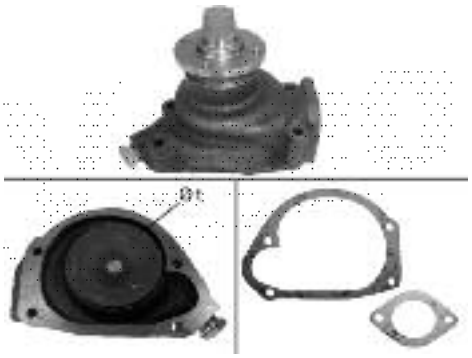

NISSAN 741001134

Valeo 506367

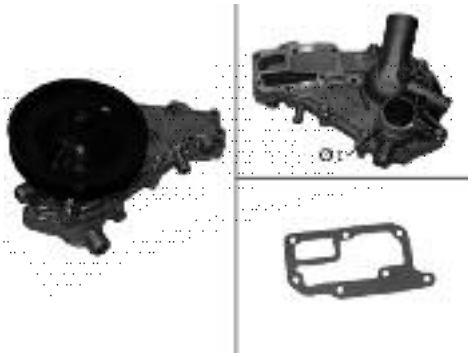

RENAULT 7701466420

Valeo 506368

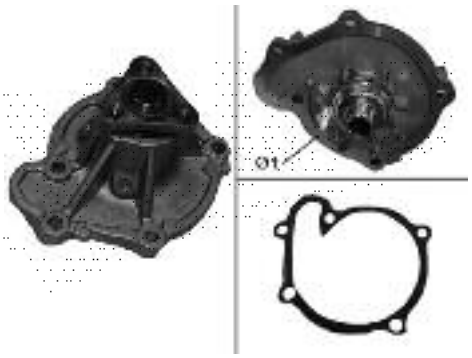

NISSAN 2101099B00

Valeo 506377

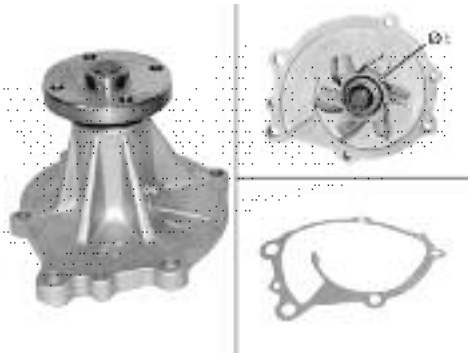

NISSAN 2101021085

Valeo 506379

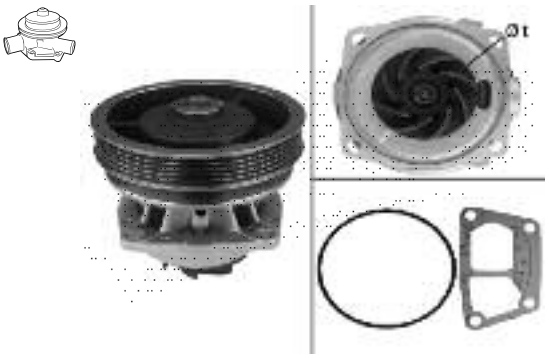

FIAT 46437916

Valeo 506380

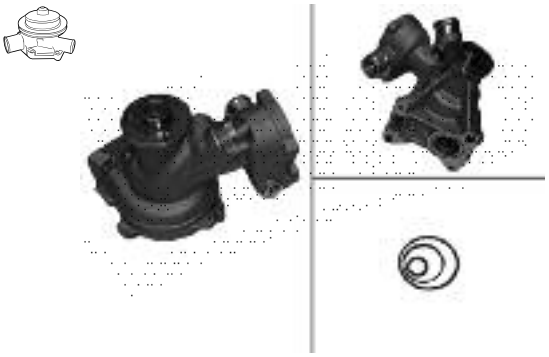

MERCEDES 1042002901

Valeo 506383

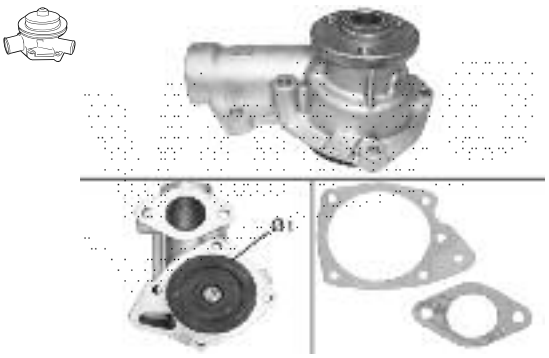

FIAT 4466193

Valeo 506385

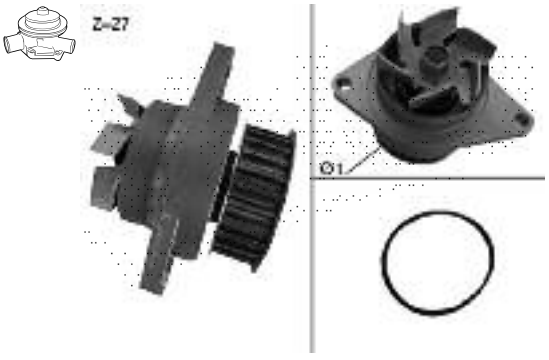

VOLKSWAGEN 030121008D

Valeo 506386

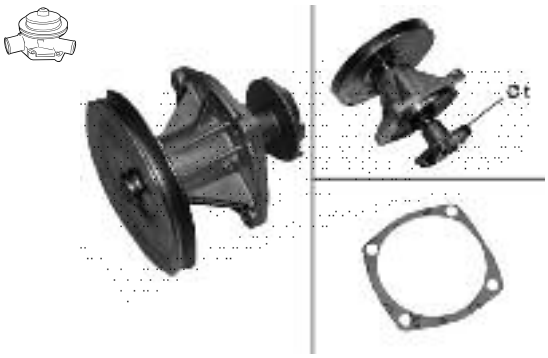

FIAT 7784975

Valeo 506388

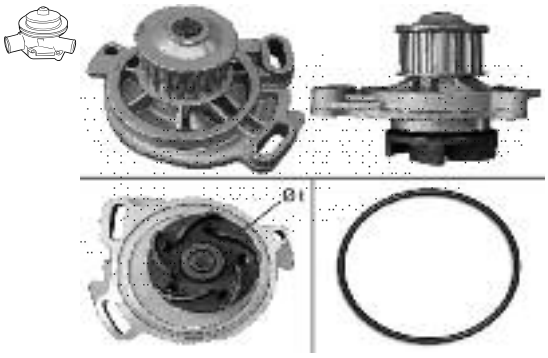

VOLKSWAGEN 023121004X

Valeo 506390

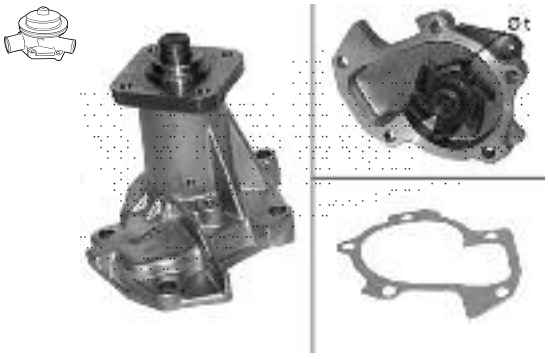

DAIHATSU 1610087185000

Valeo 506391

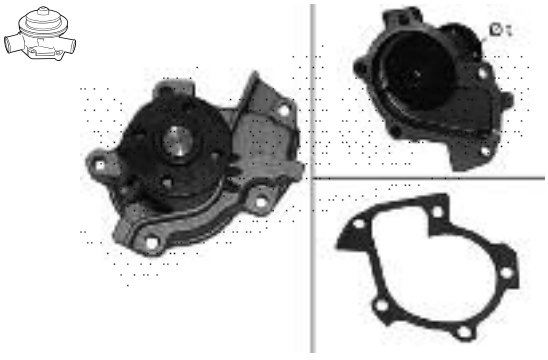

DAIHATSU 1610087108000

Valeo 506394

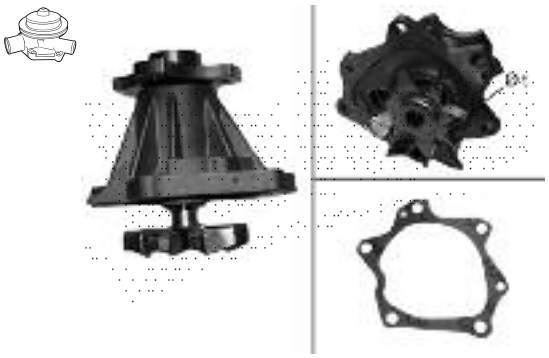

NISSAN 2101081T25

Valeo 506397

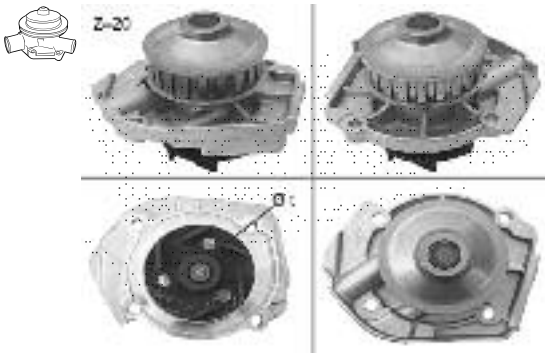

LANCIA 71713727

Valeo 506399

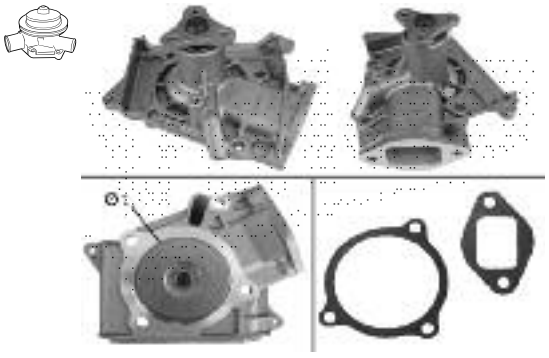

KIA KKY0115010D

Valeo 506400

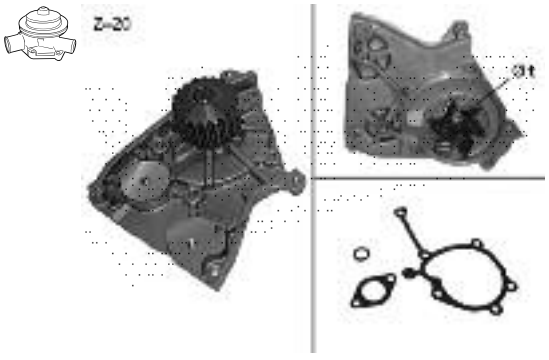

MAZDA 8AK115010A

Valeo 506401

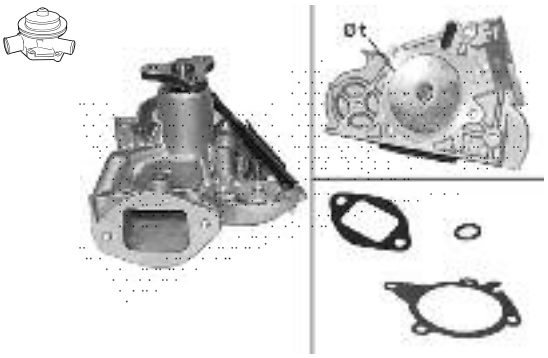

KIA 0K93715010

Valeo 506404

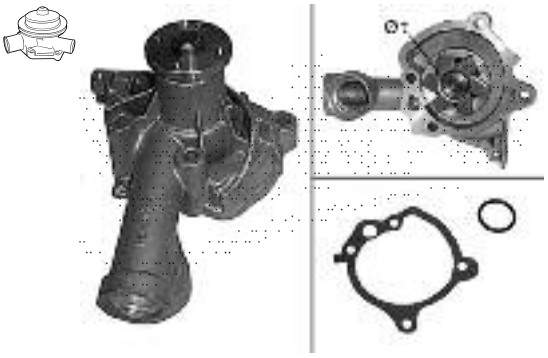

FIAT 46444355

Valeo 506405

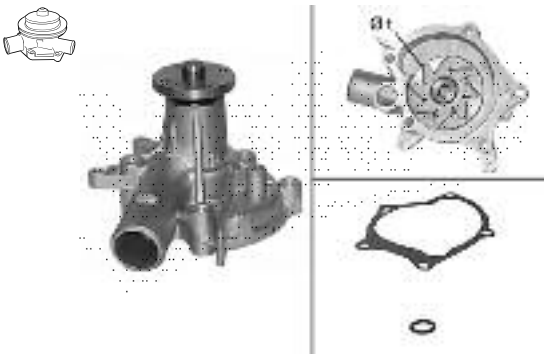

MITSUBISHI MD997615

Valeo 506406

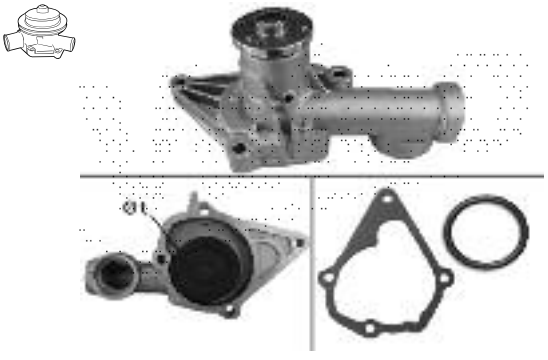

HYUNDAI 2510022012

Valeo 506407

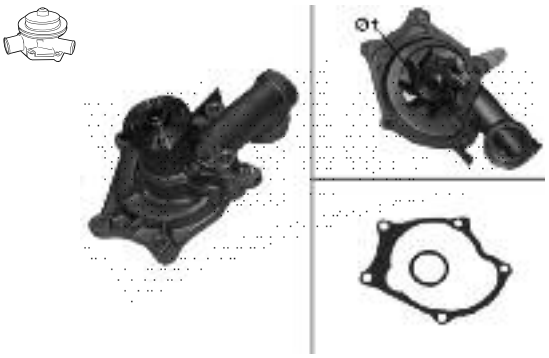

HYUNDAI 2510032502

Valeo 506408

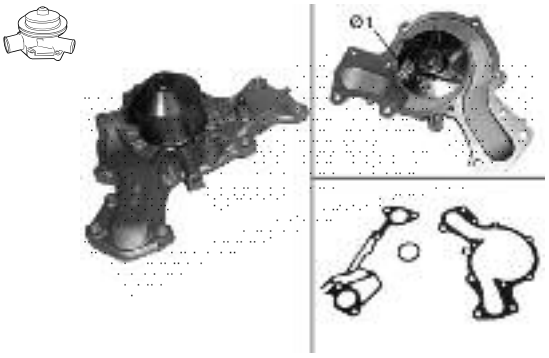

MITSUBISHI MD980000

Valeo 506410

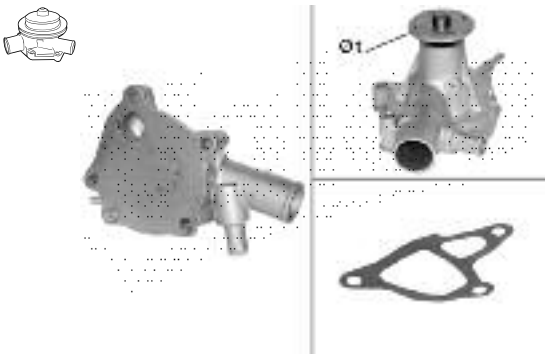

DAIHATSU 1610019016000

Valeo 506411

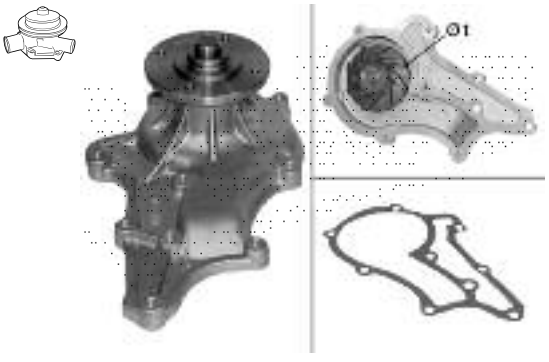

TOYOTA 1610039315

Valeo 506412

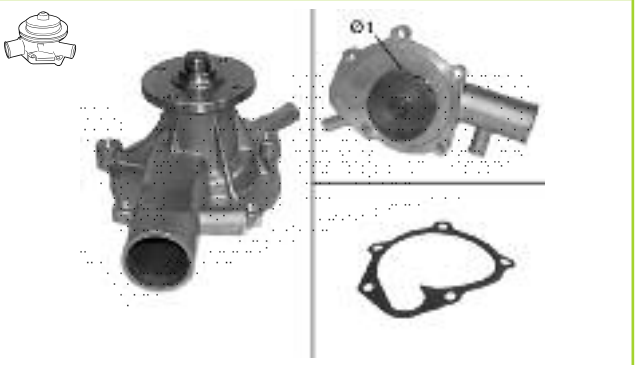

TOYOTA 1610028020

Valeo 506413

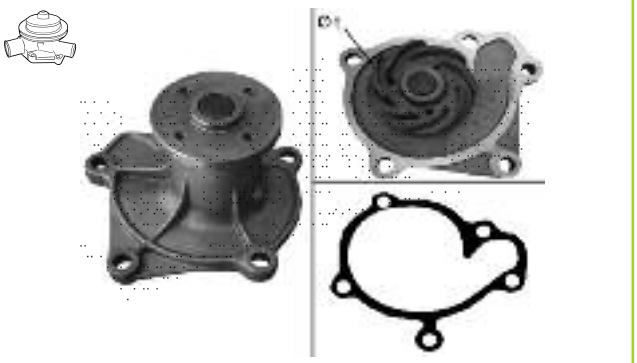

MAZDA 032415010D

Valeo 506416

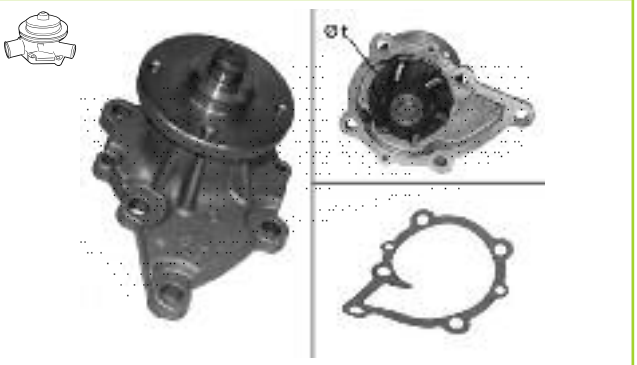

NISSAN 21010H7227

Valeo 506418

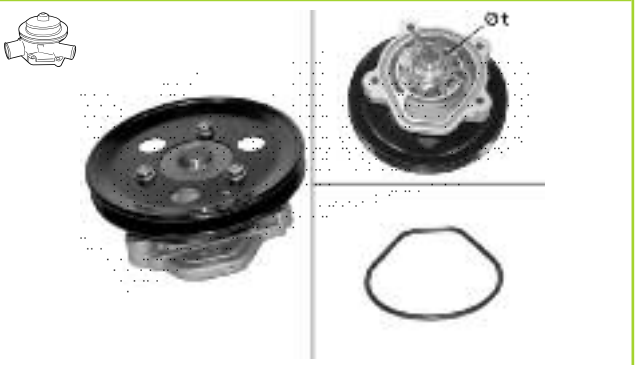

HONDA 19110634405

Valeo 506423

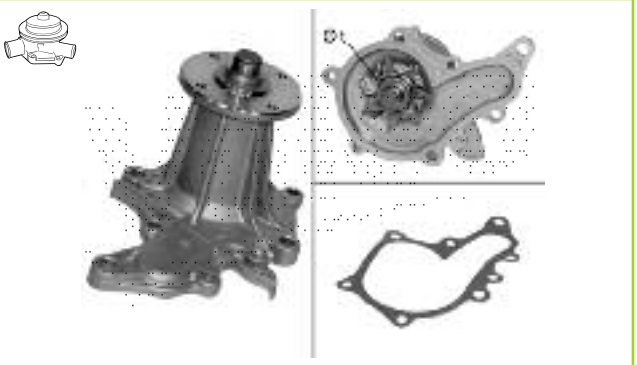

TOYOTA 1610019035

Valeo 506424

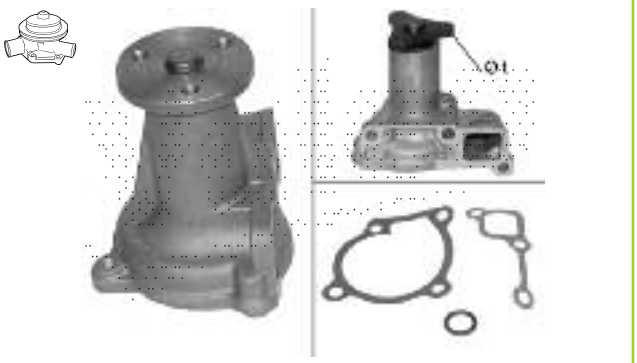

MAZDA 8ABT15010A

Valeo 506425

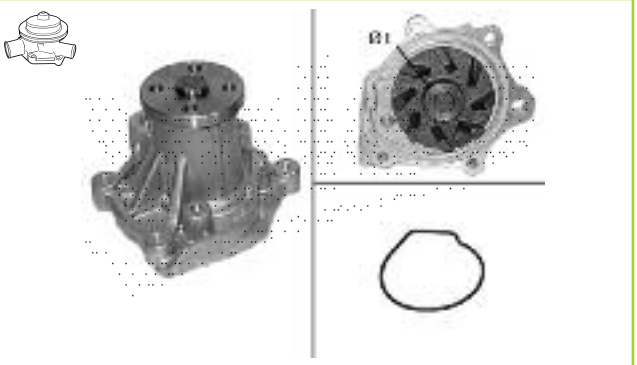

HONDA 19200PD2415

Valeo 506426

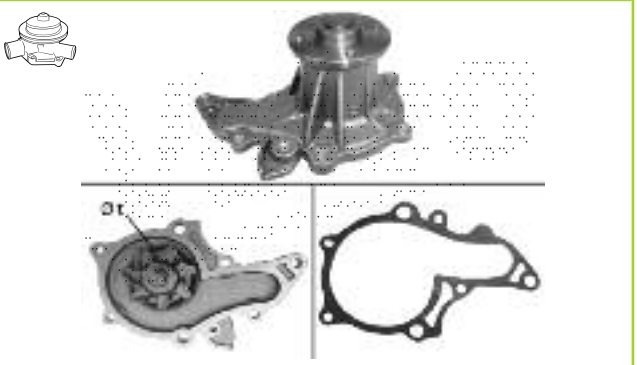

TOYOTA 1610019205

Valeo 506428

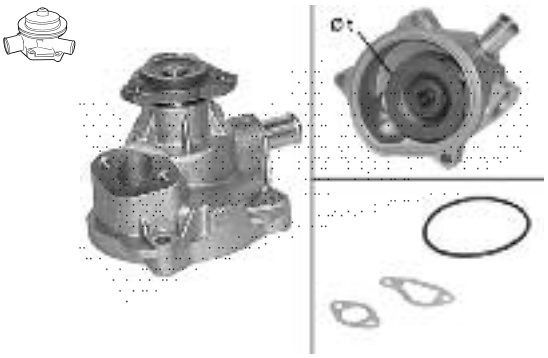

VOLKSWAGEN 025121010AX

Valeo 506429

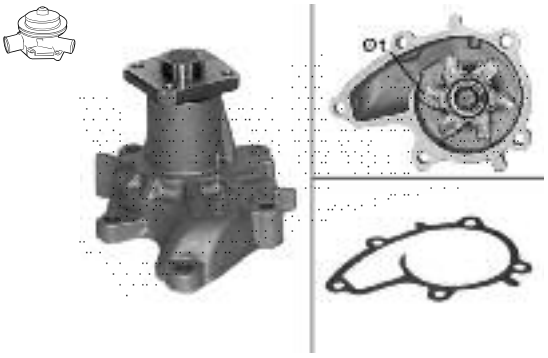

NISSAN 21010V5529

Valeo 506433

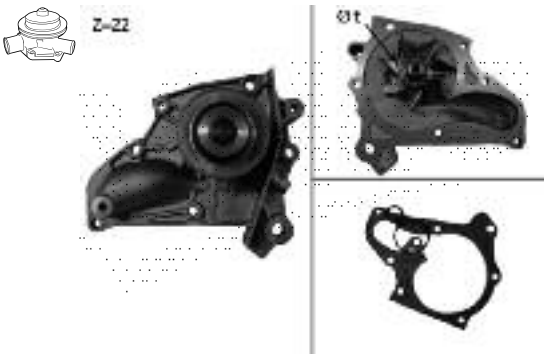

TOYOTA 1610079105

Valeo 506434

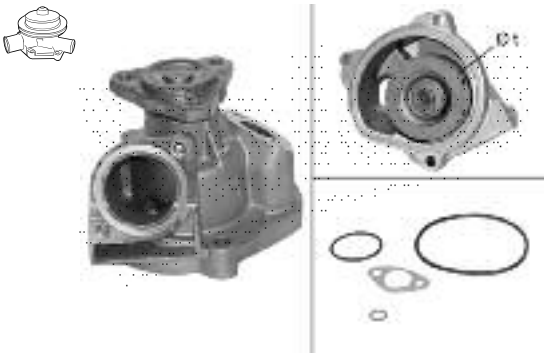

VOLKSWAGEN 025121010CX

Valeo 506436

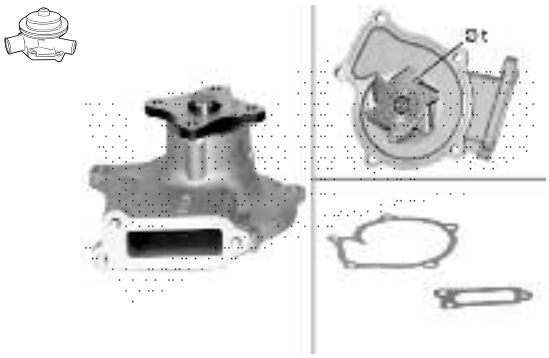

NISSAN 2101077A00

Valeo 506437

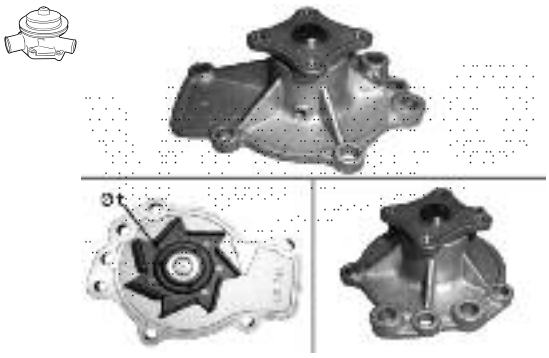

NISSAN 210109F501

Valeo 506438

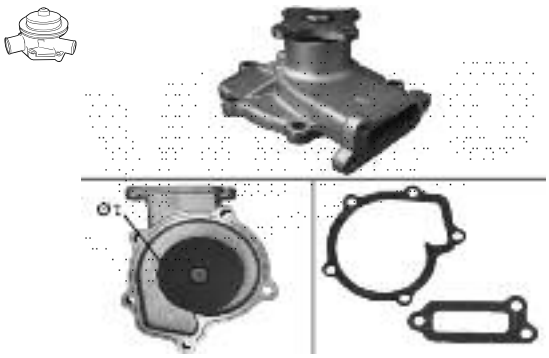

NISSAN 2101088R00

Valeo 506439

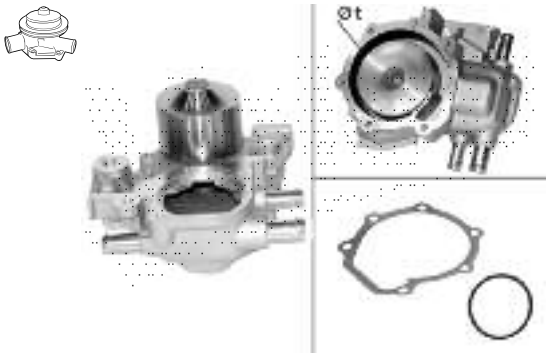

SUBARU 21111AA022

Valeo 506440

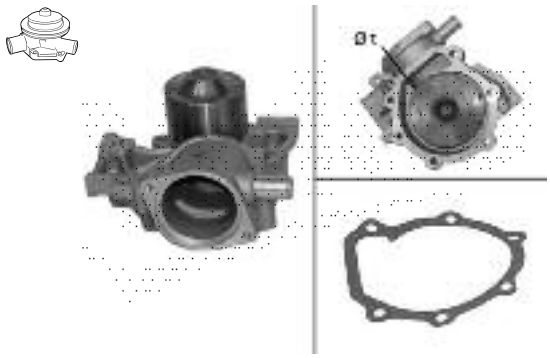

SUBARU 21111AA007

Valeo 506441

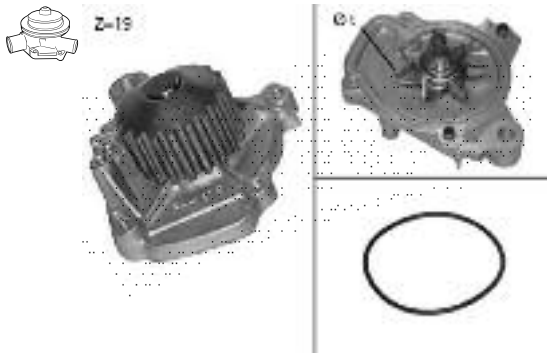

HONDA 19200P08003

Valeo 506442

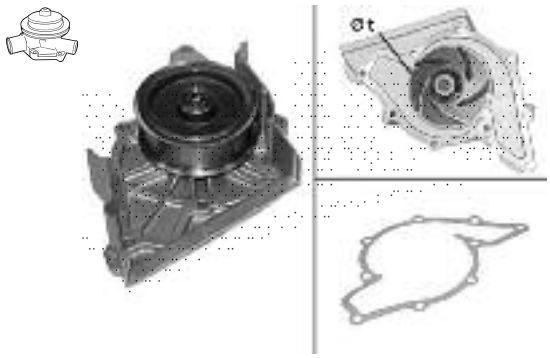

AUDI 078121004C

Valeo 506443

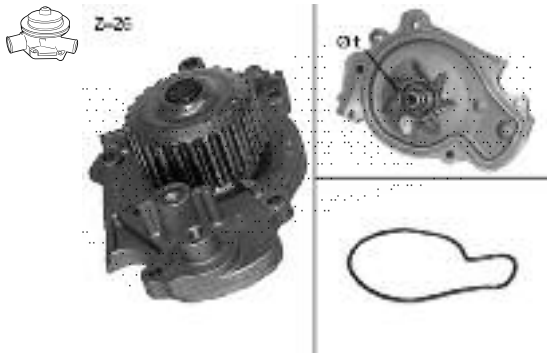

HONDA 19200P13003

Valeo 506444

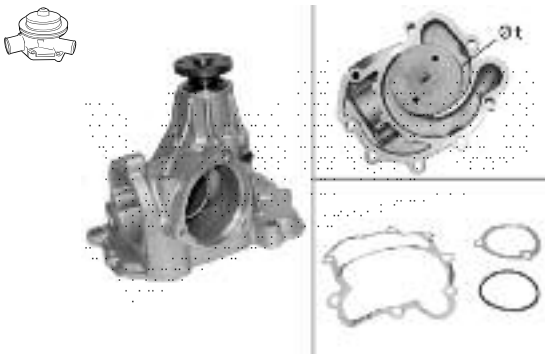

MERCEDES 1192001501

Valeo 506445

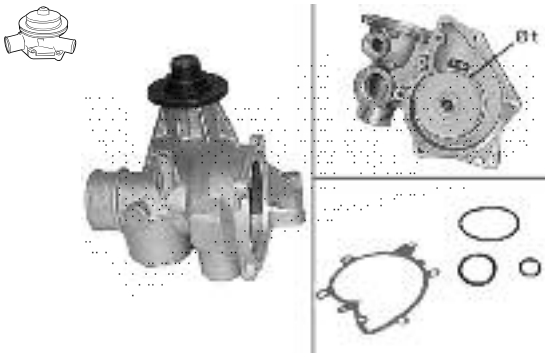

BMW 11510007042

Valeo 506446

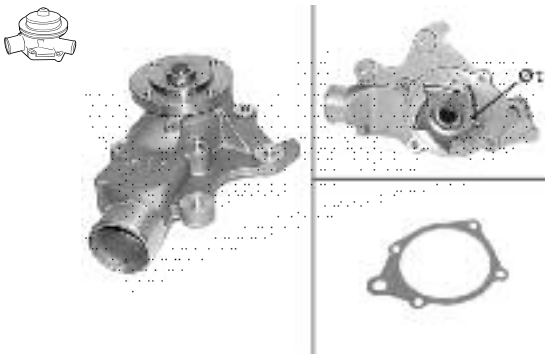

JEEP 4626215

Valeo 506454

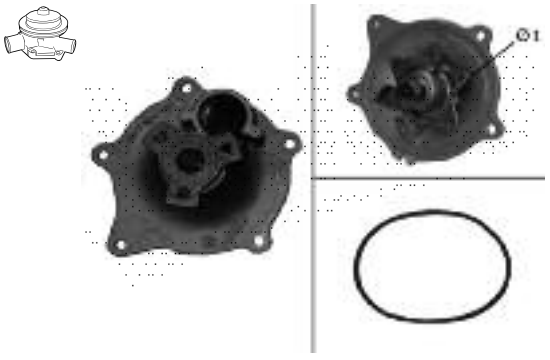

CHRYSLER 5010898AA

Valeo 506455

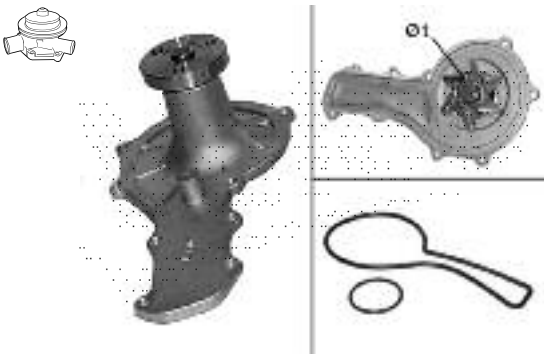

CHRYSLER 4621172

Valeo 506456

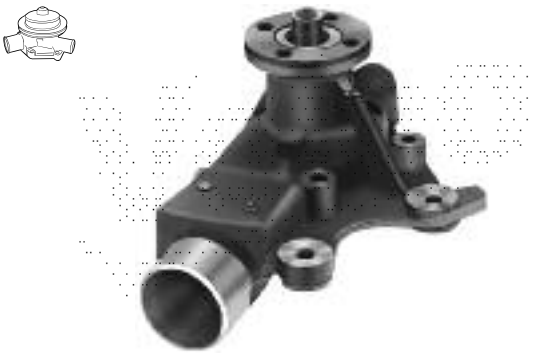

JEEP 4626054

Valeo 506468

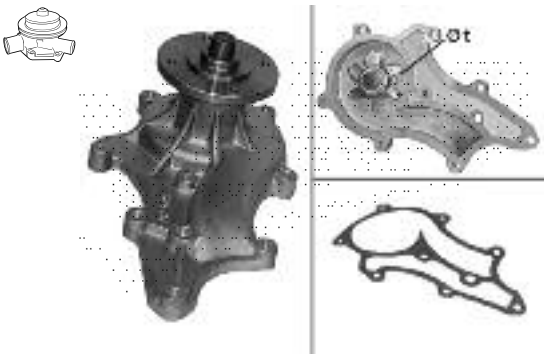

TOYOTA 1610039346

Valeo 506470

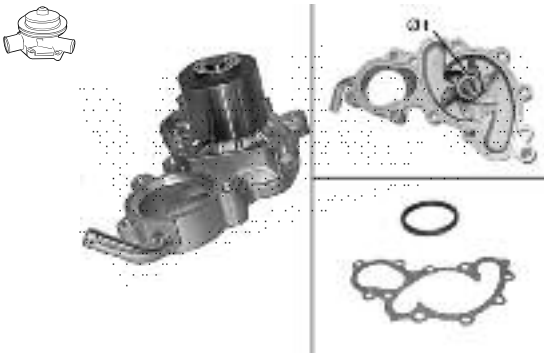

TOYOTA 1610069225

Valeo 506472

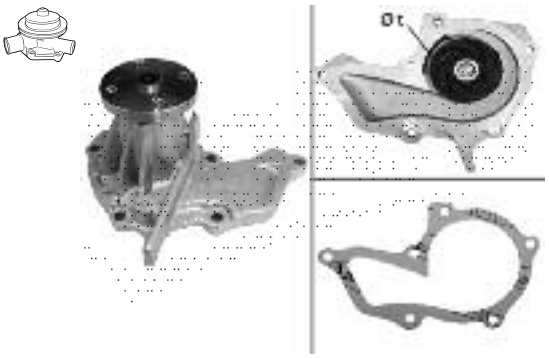

MAZDA 1E0515010

Valeo 506473

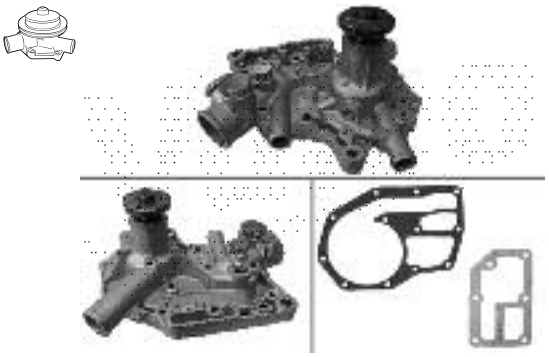

RENAULT 7701463014

Valeo 506474

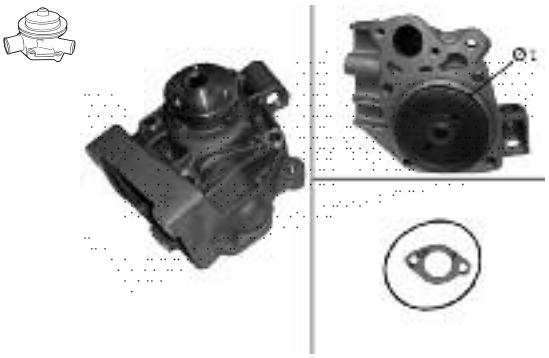

FIAT 99459759

Valeo 506478

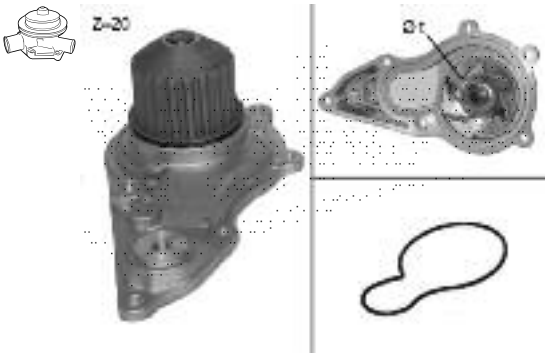

CHRYSLER 4621489

Valeo 506479

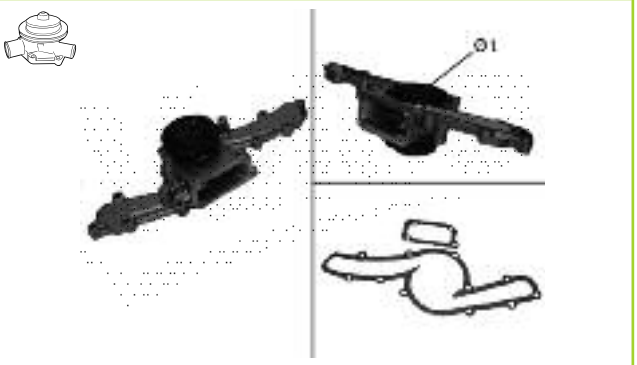

ALFA ROMEO 60668488

Valeo 506481

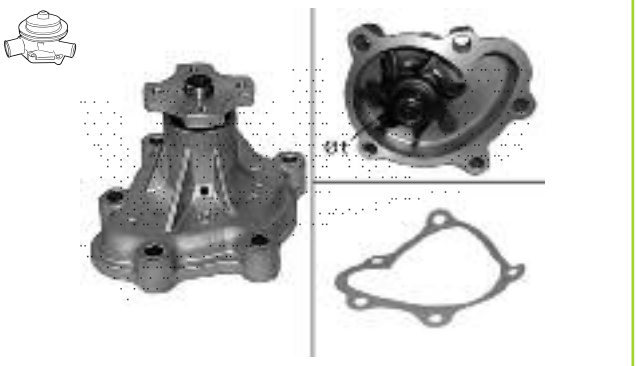

OPEL 6334038

Valeo 506482

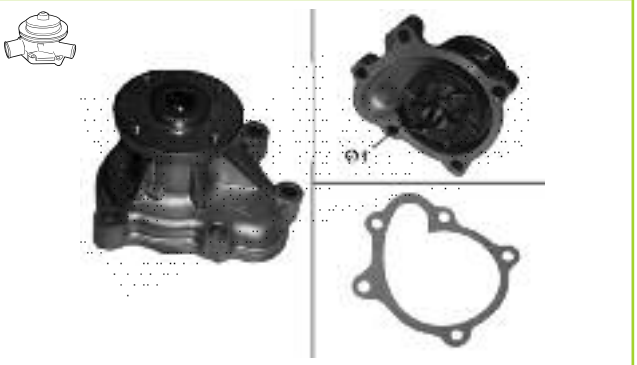

VAUXHALL 97110386

Valeo 506483

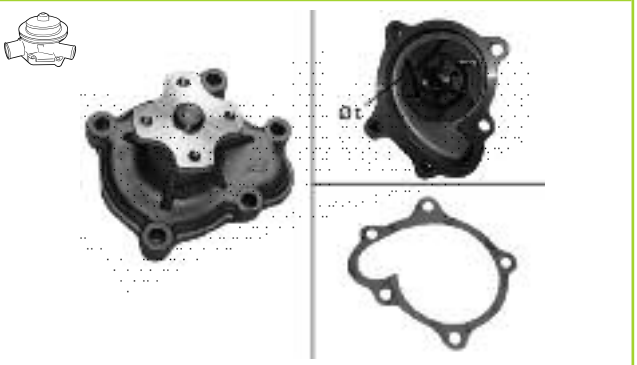

OPEL 1334121

Valeo 506484

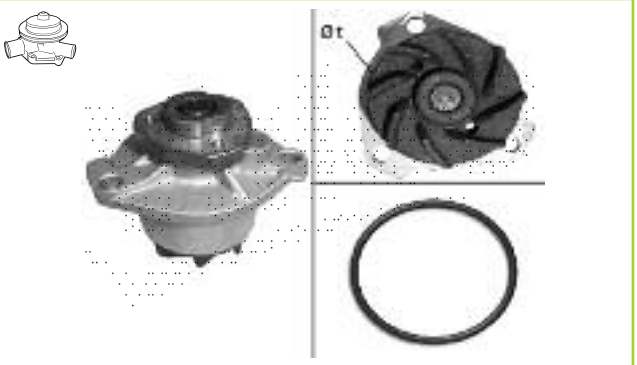

FORD 1059843

Valeo 506486

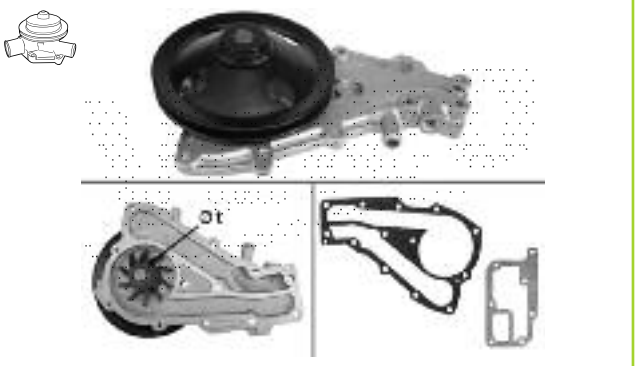

RENAULT 7701467153

Valeo 506487

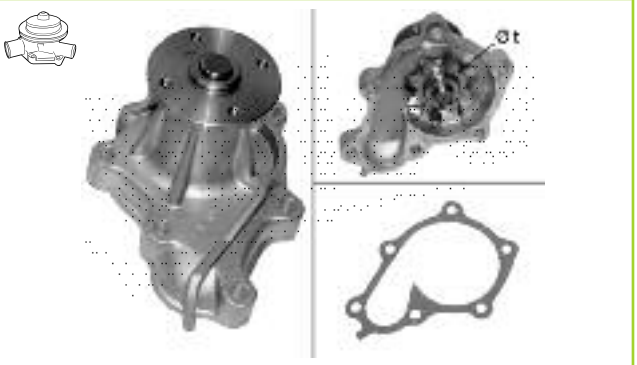

NISSAN 2101016E02

Valeo 506488

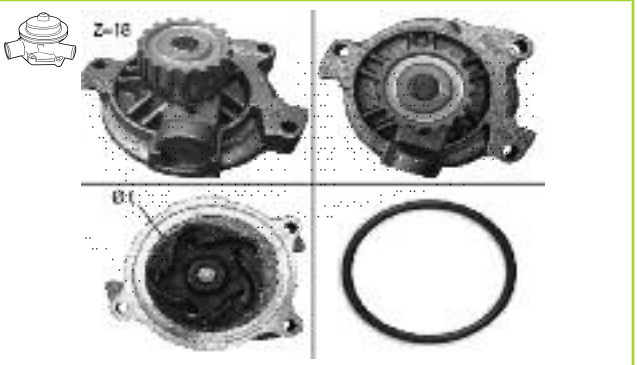

AUDI 074121005N

Valeo 506492

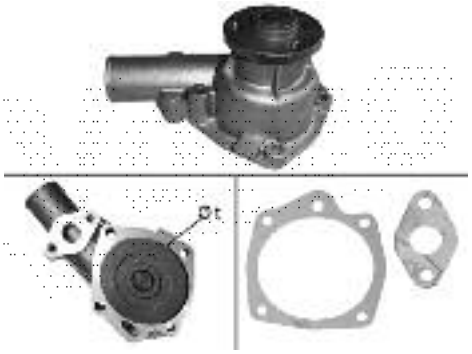

FIAT 4269431

Valeo 506508

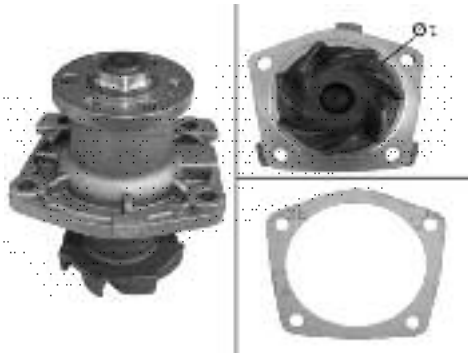

FIAT 7671810

Valeo 506513

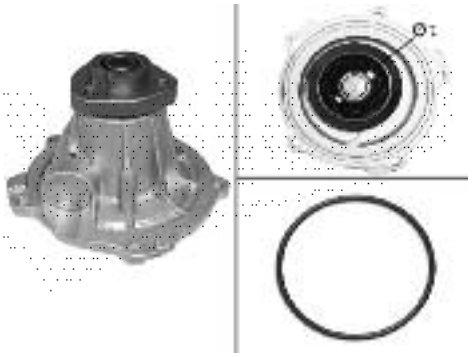

AUDI 028121004

Valeo 506514

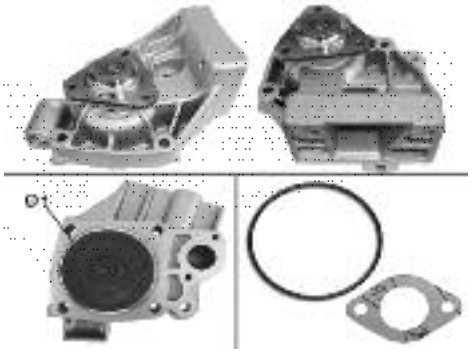

CITROËN 1201H5

Valeo 506516

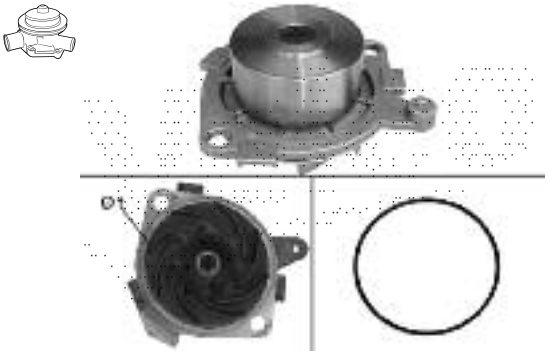

FIAT 7762926

Valeo 506517

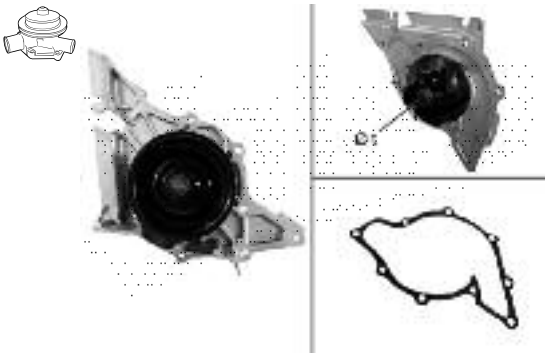

SKODA 078121006

Valeo 506518

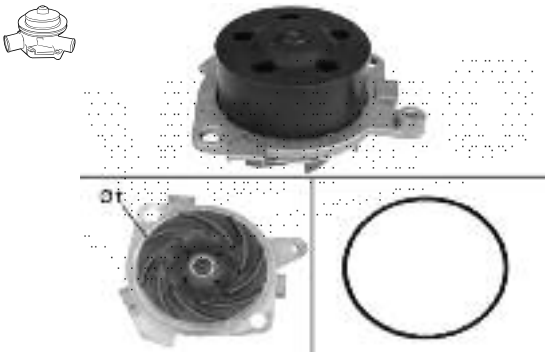

ALFA ROMEO 60586222

Valeo 506519

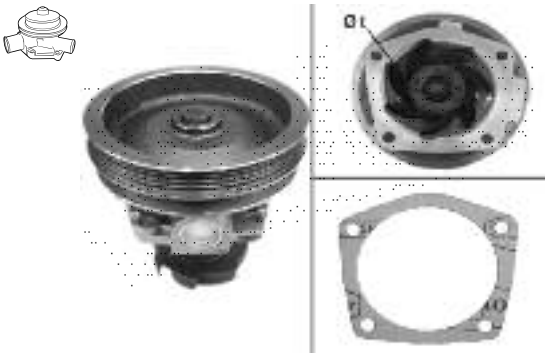

FIAT 7784987

Valeo 506521

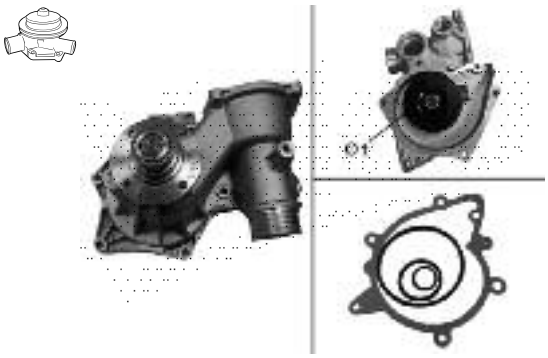

BMW 11511742647

Valeo 506522

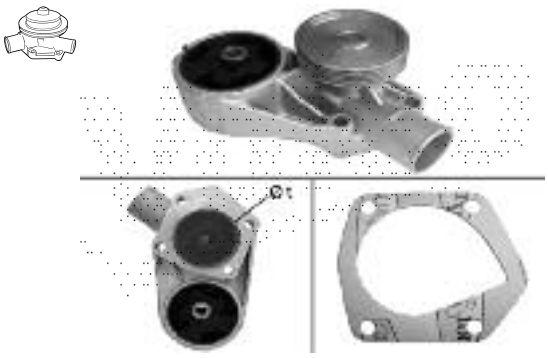

SKODA 047121011

Valeo 506523

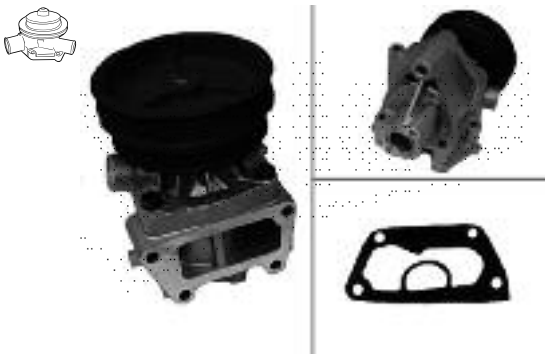

FIAT 46444355

Valeo 506524

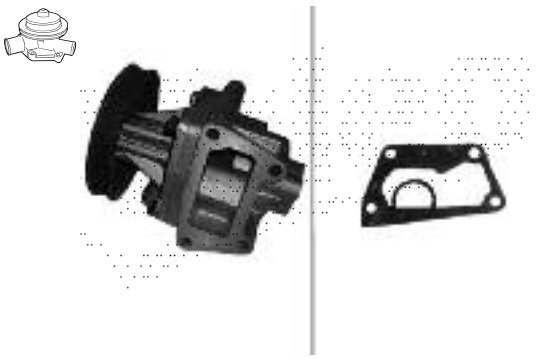

FIAT 46437911

Valeo 506525

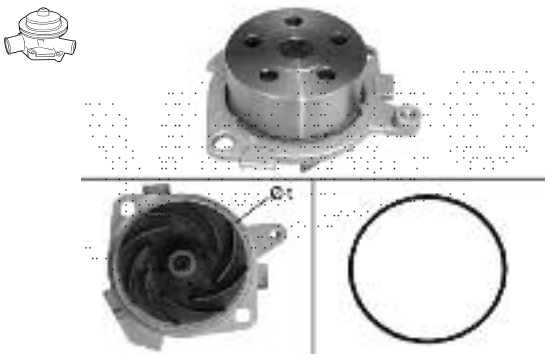

ALFA ROMEO 60608898

Valeo 506526

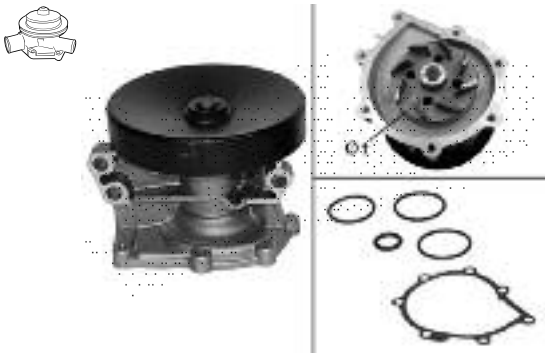

SAAB 9321951

Valeo 506527

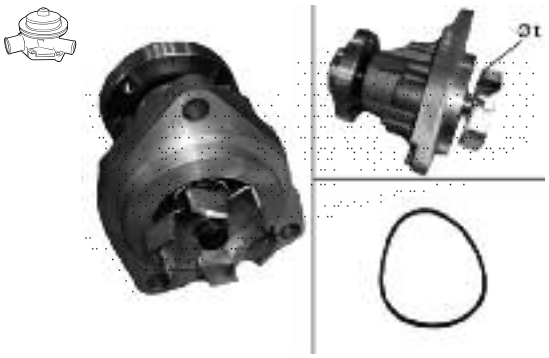

VAUXHALL 90543277

Valeo 506528

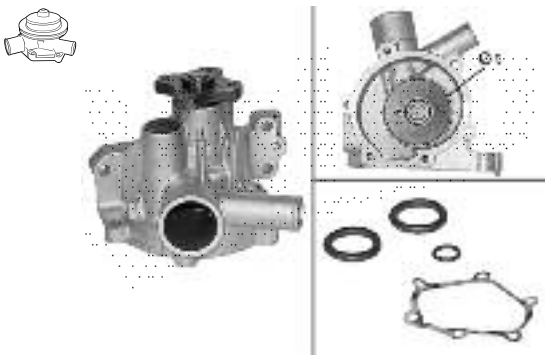

SAAB 9321688

Valeo 506529

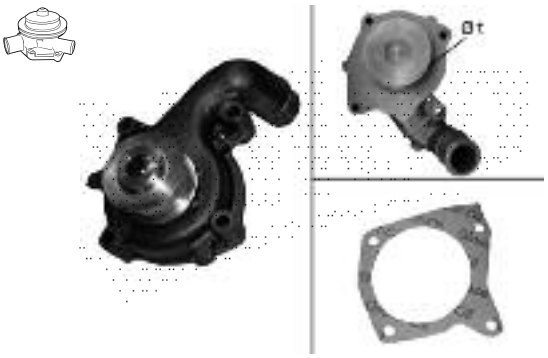

FORD 1023645

Valeo 506530

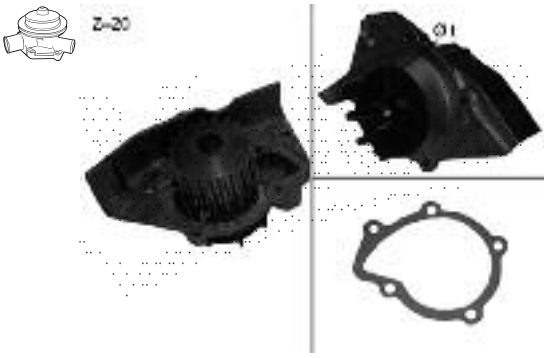

CITROËN 120193

Valeo 506531

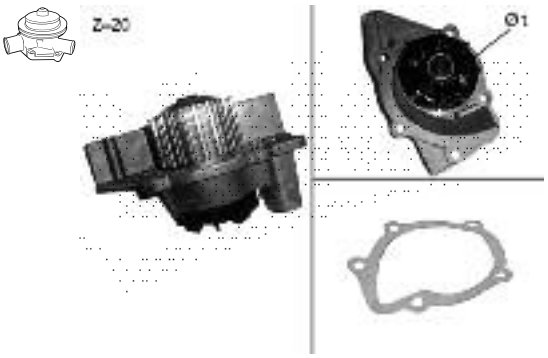

CITROËN 120198

Valeo 506532

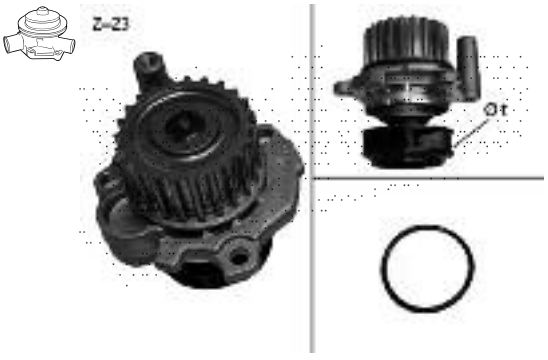

VOLKSWAGEN 06A121011T

Valeo 506533

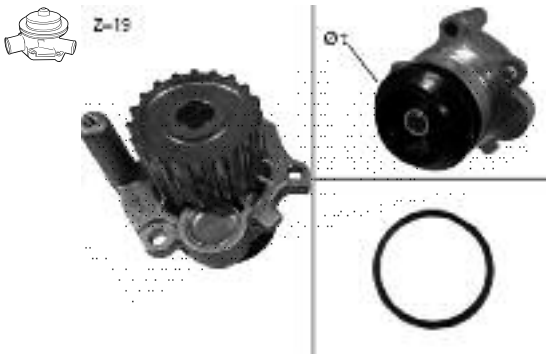

SEAT 038121011A

Valeo 506534

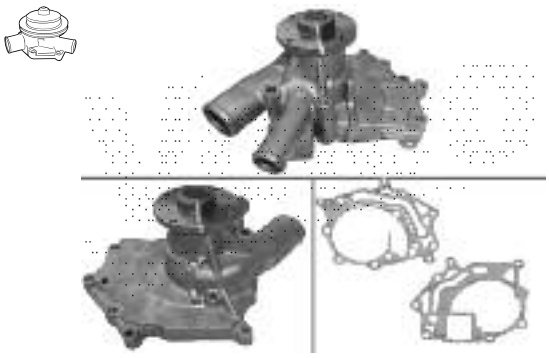

NISSAN 210109C600

Valeo 506535

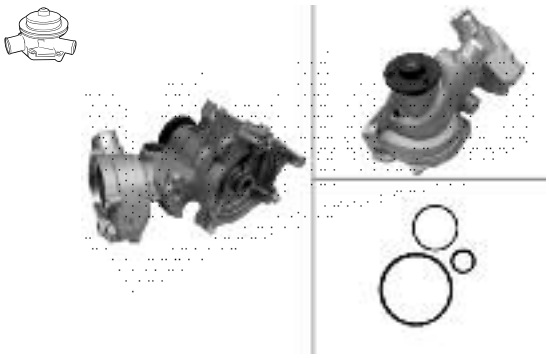

MERCEDES 1042004501

Valeo 506536

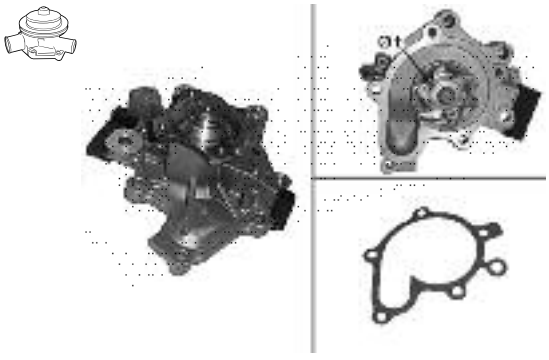

FORD USA 3396917

Valeo 506538

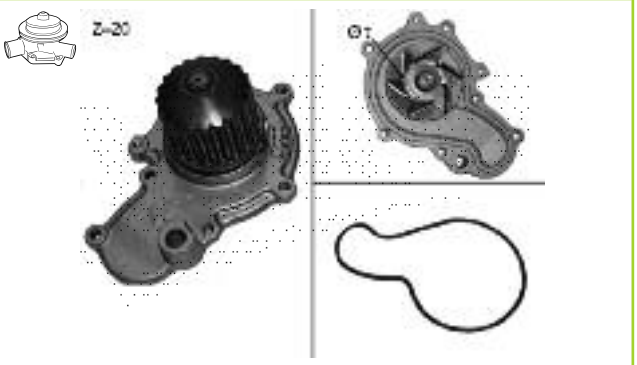

CHRYSLER 4667660

Valeo 506539

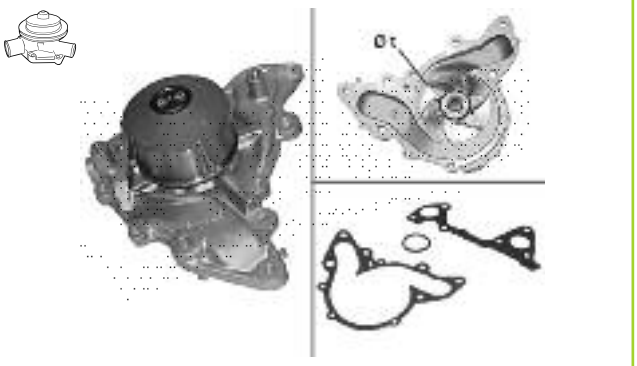

CHRYSLER 4663296

Valeo 506540

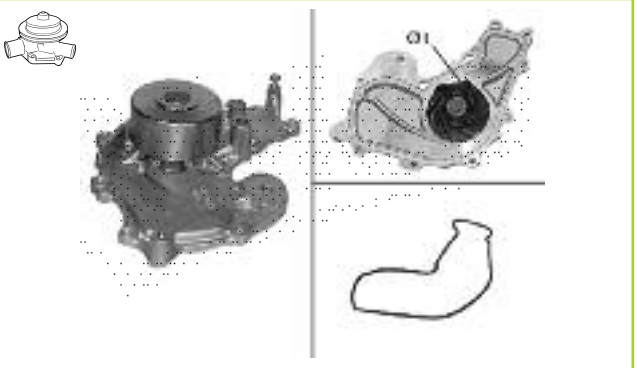

HONDA 19200PH7003

Valeo 506542

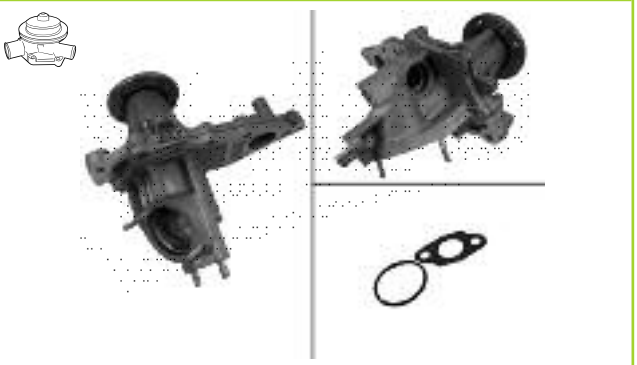

LEXUS 1610049837

Valeo 506543

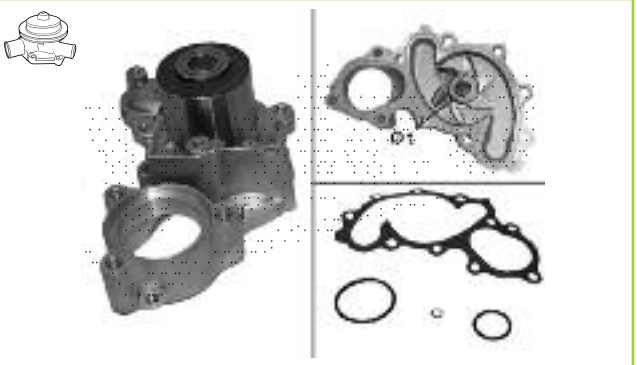

TOYOTA 1610069305

Valeo 506544

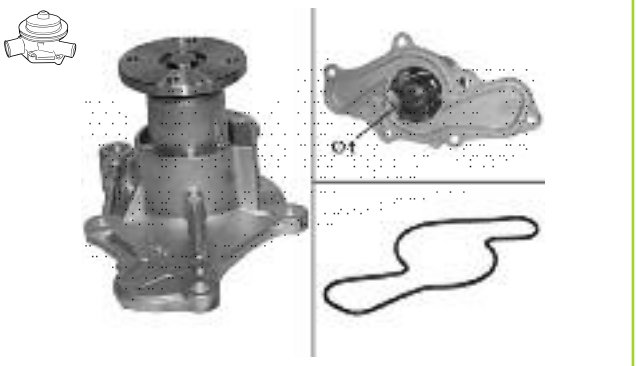

FORD USA 3396916

Valeo 506547

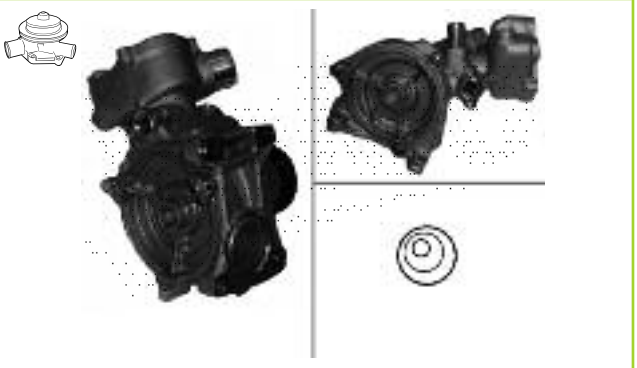

MERCEDES 1042003201

Valeo 506548

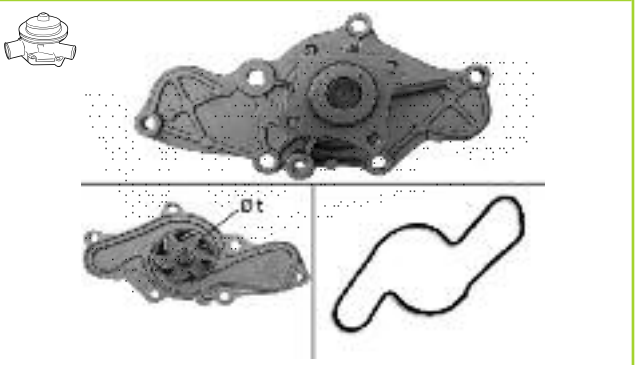

MAZDA 8AK215010

Valeo 506559

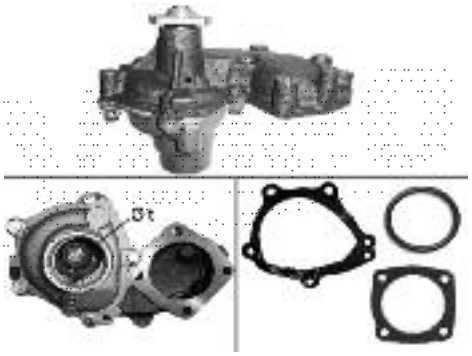

ALFA ROMEO 0060812263

Valeo 506560

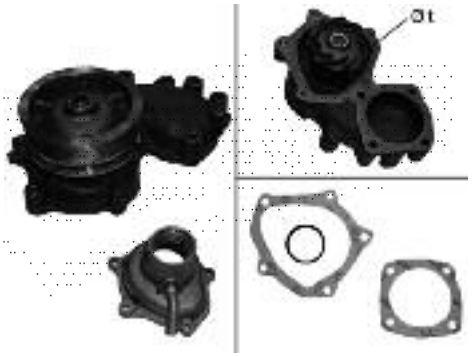

FIAT 7696226

Valeo 506561

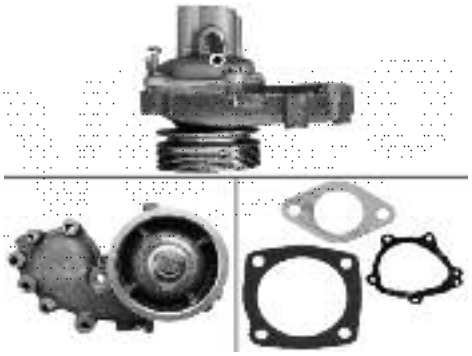

FIAT 5896823

Valeo 506562

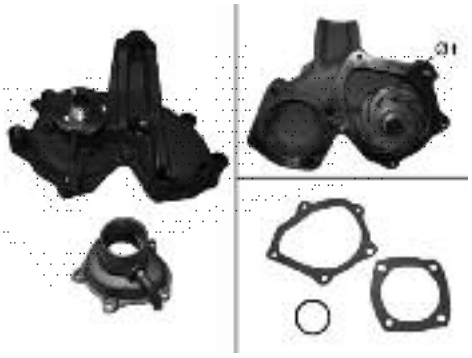

FIAT 46409136

Valeo 506563

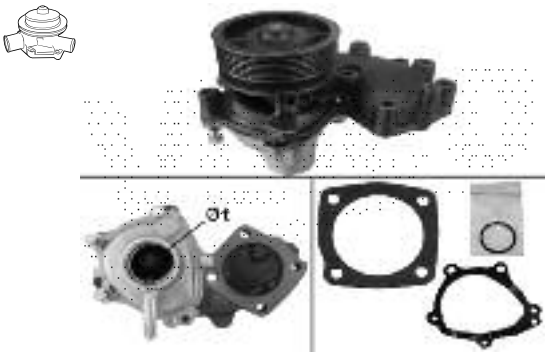

FIAT 46410551

Valeo 506564

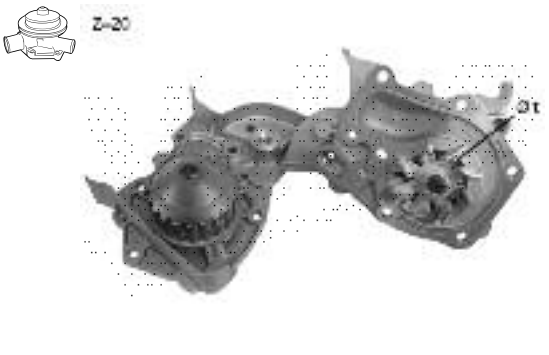

RENAULT 7700866518

Valeo 506565

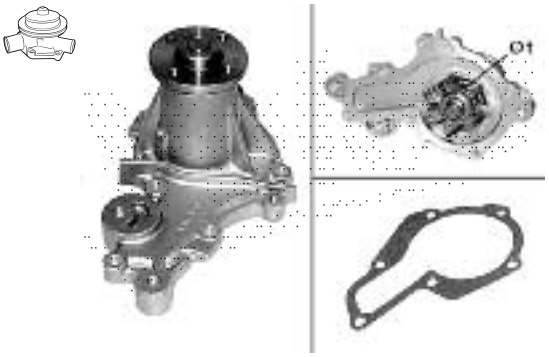

SUZUKI 1740083812

Valeo 506568

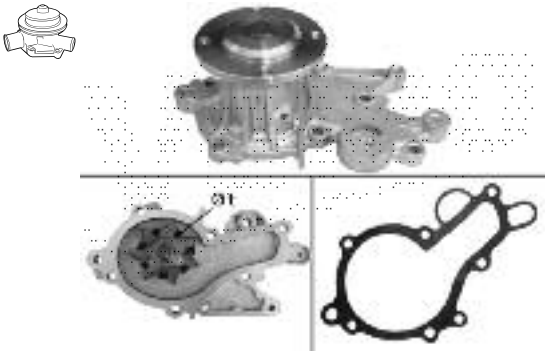

SUBARU 1740082851

Valeo 506572

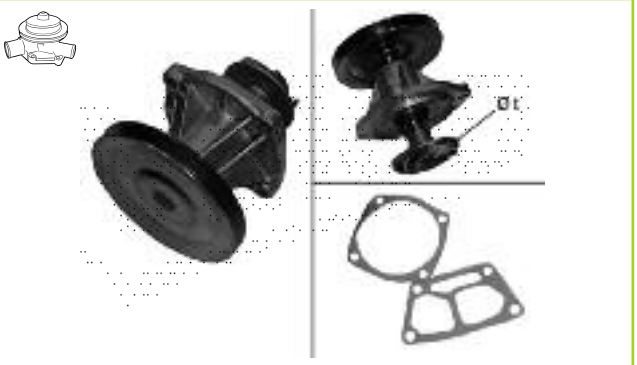

FIAT 5894582

Valeo 506573

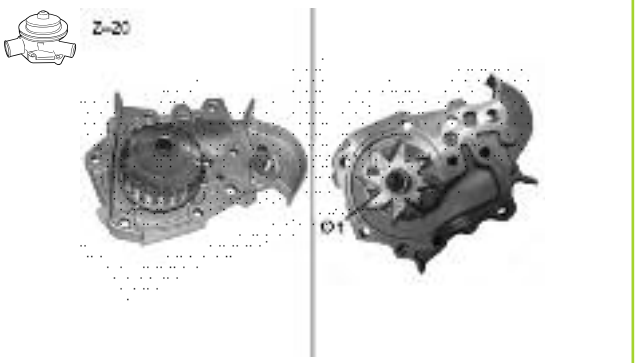

RENAULT 8200146298

Valeo 506574

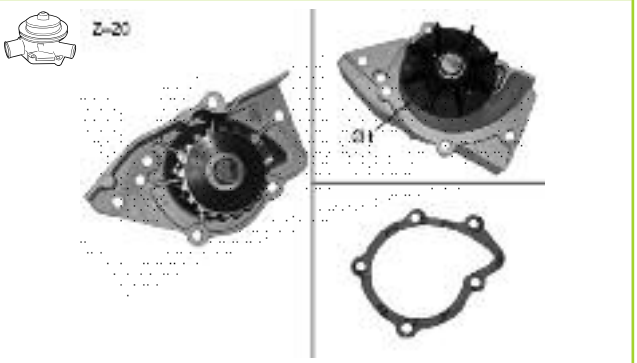

CITROËN 1201A8

Valeo 506575

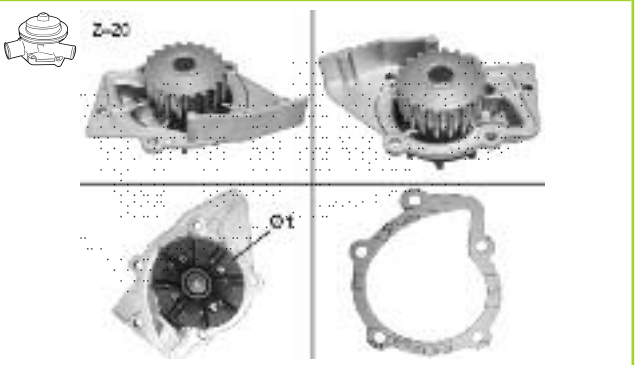

CITROËN 1201C4

Valeo 506576

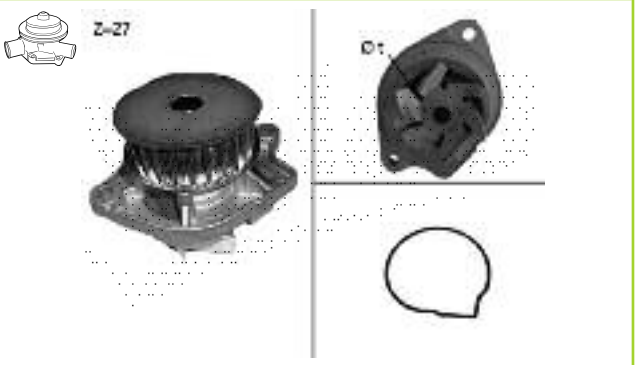

VOLKSWAGEN 036121005S

Valeo 506577

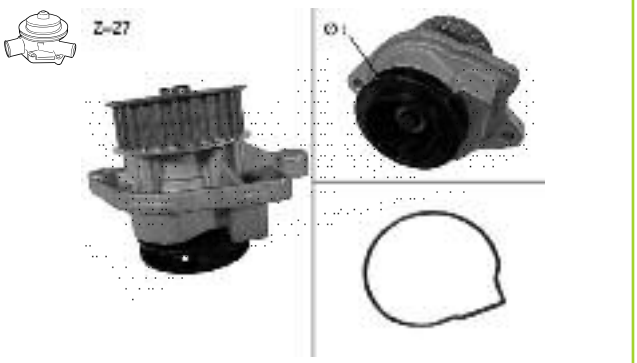

SEAT 030121008C

Valeo 506578

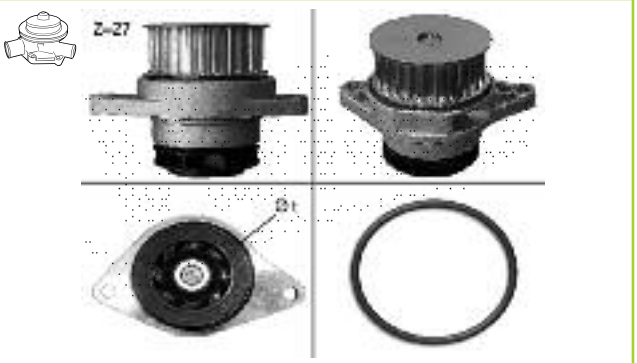

SEAT 036121005M

Valeo 506579

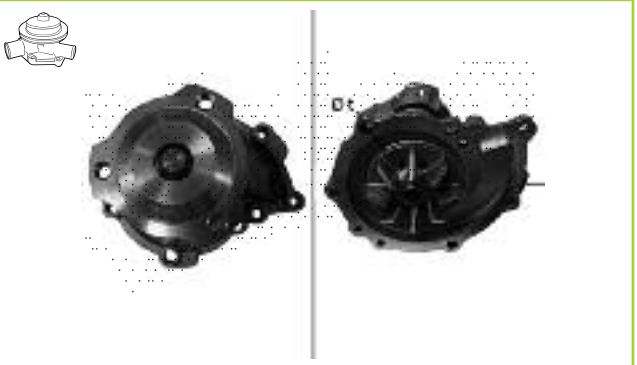

RENAULT 7700871801

Valeo 506580

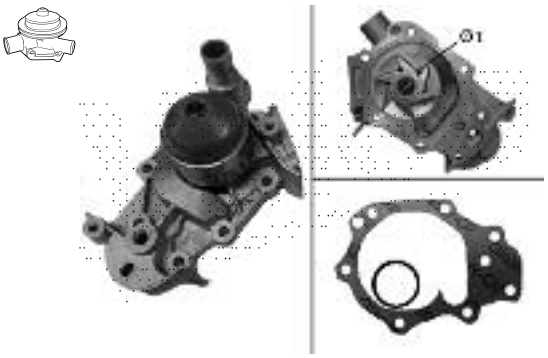

RENAULT 8200088663

Valeo 506581

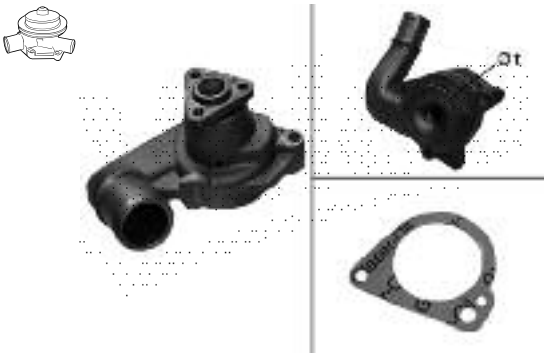

FORD 1020567

Valeo 506582

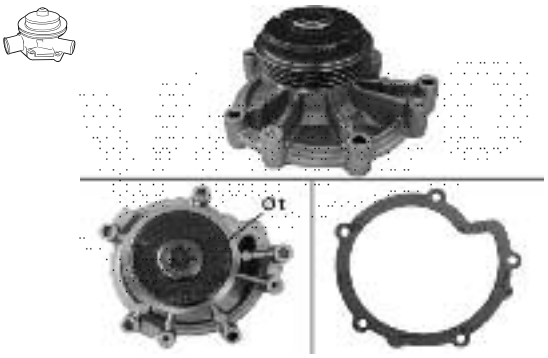

PEUGEOT 1201A3

Valeo 506587

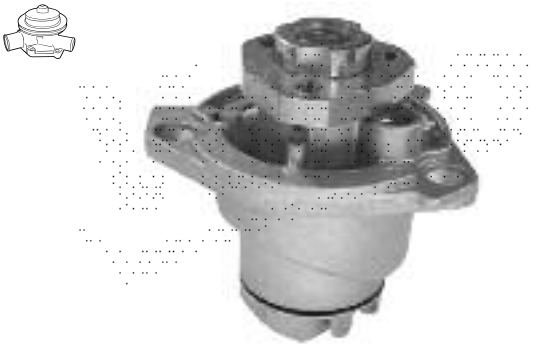

VOLKSWAGEN 071121005

Valeo 506588

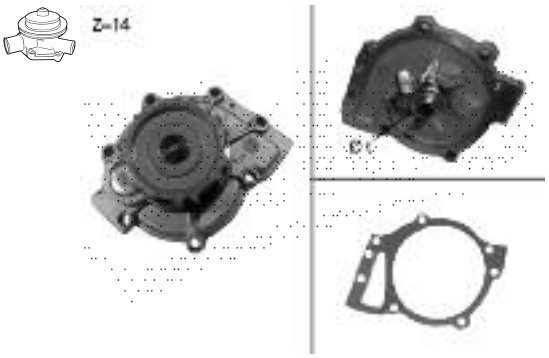

VOLVO 2719847

Valeo 506589

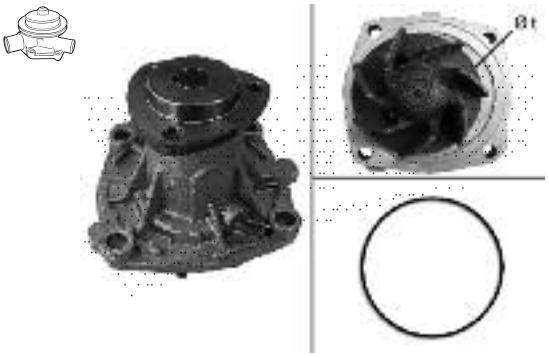

ALFA ROMEO 0060778982

Valeo 506590

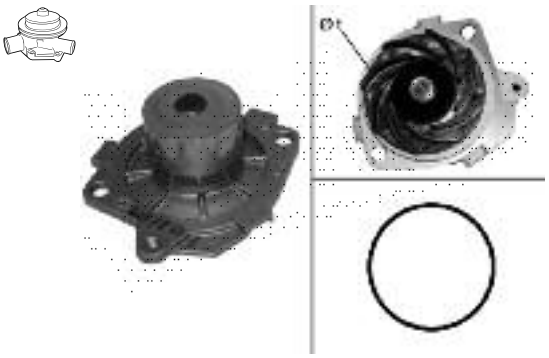

OPEL 1334147

Valeo 506591

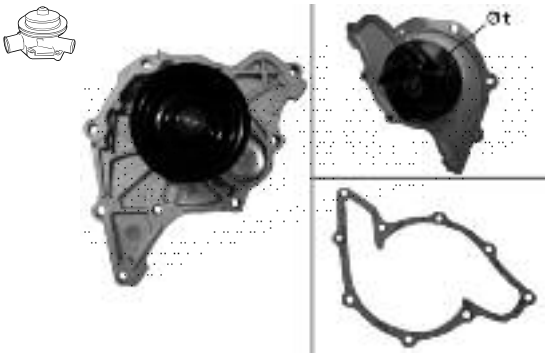

AUDI 059121004E

Valeo 506592

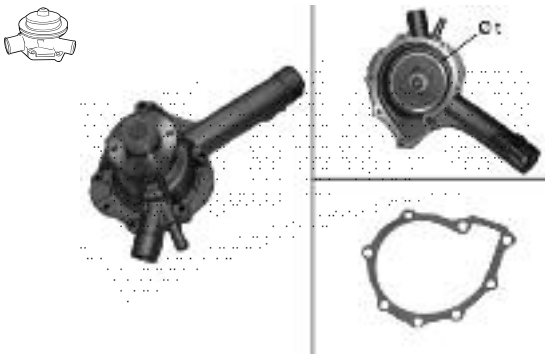

MERCEDES 1112004101

Valeo 506593

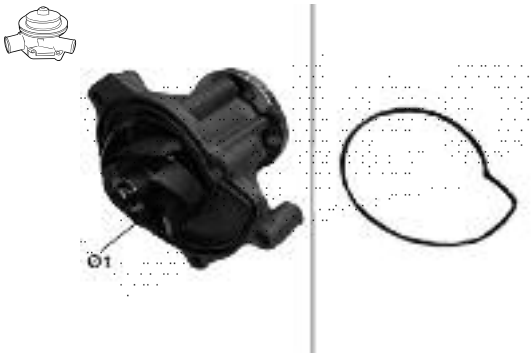

MERCEDES 1662000520

Valeo 506594

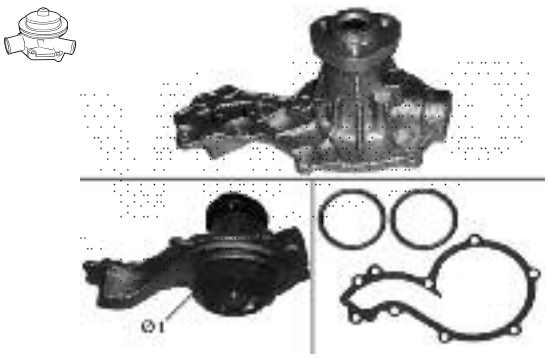

AUDI 050121010AX

Valeo 506595

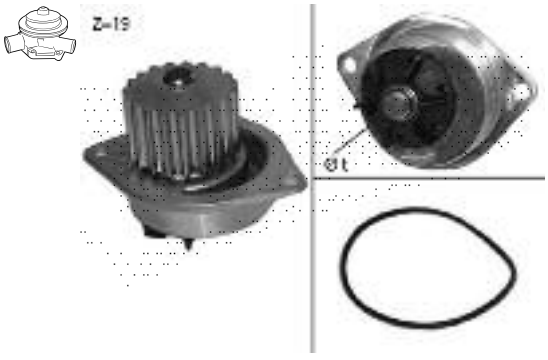

CITROËN 1201E5

Valeo 506596

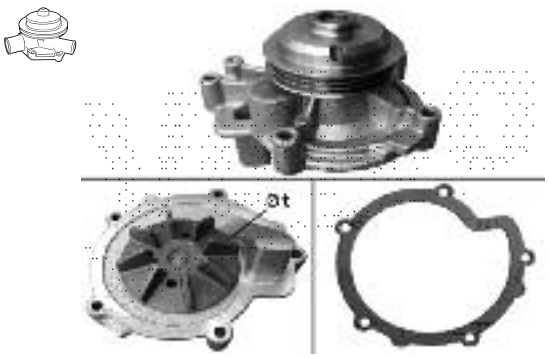

CITROËN 1201A5

Valeo 506597

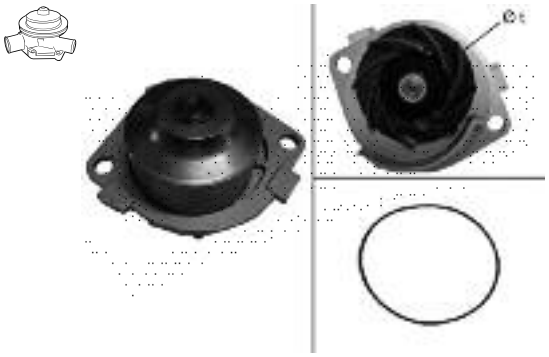

FIAT 46515971

Valeo 506598

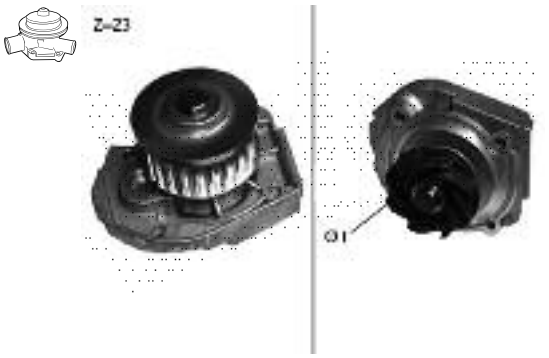

FIAT 71713728

Valeo 506599

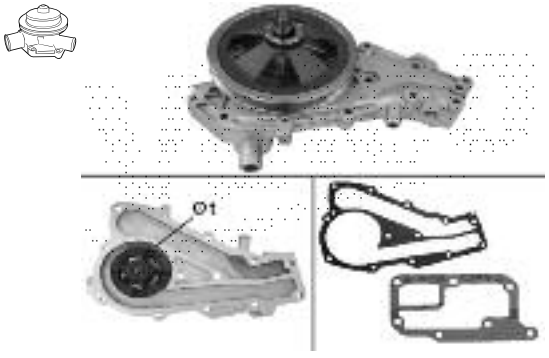

RENAULT 7701467642

Valeo 506600

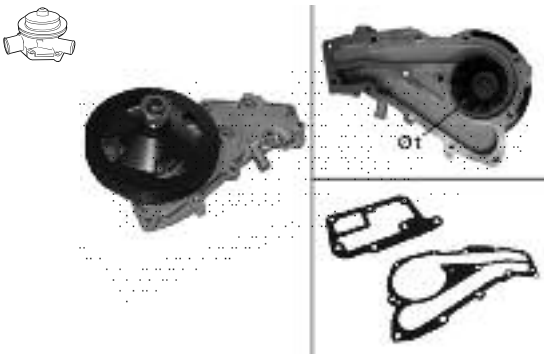

RENAULT 7701467642

Valeo 506601

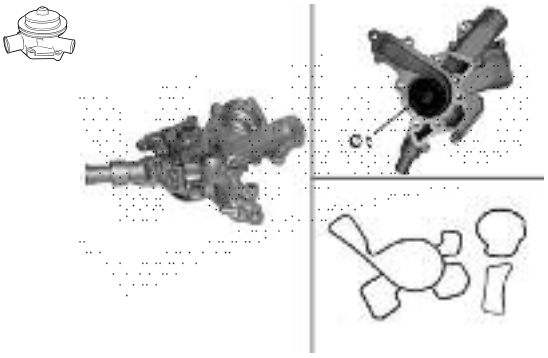

OPEL 6334025

Valeo 506602

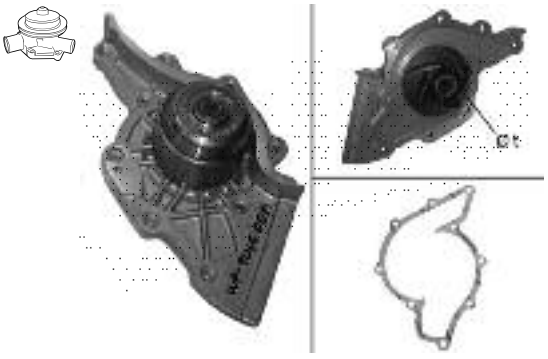

AUDI 077121004F

Valeo 506603

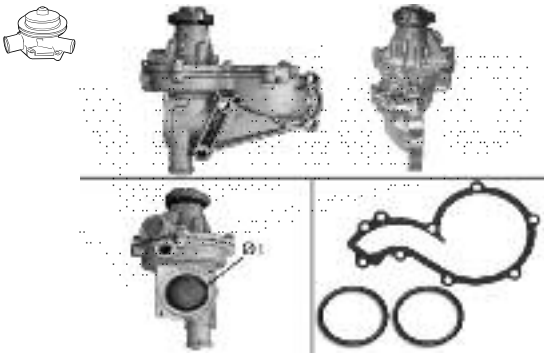

AUDI 050121010AX

Valeo 506604

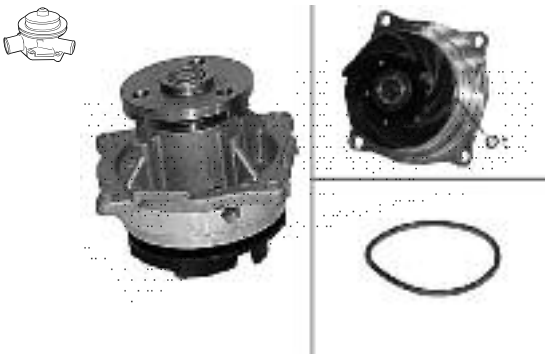

FORD 1094596

Valeo 506605

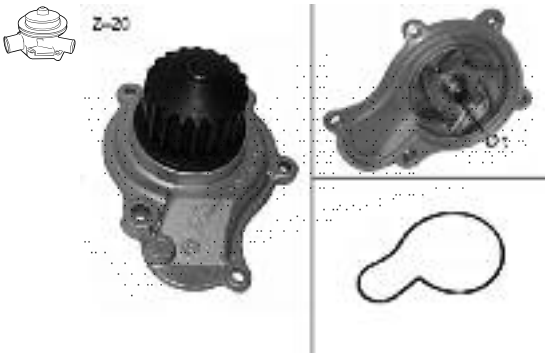

CHRYSLER 4694307AB

Valeo 506606

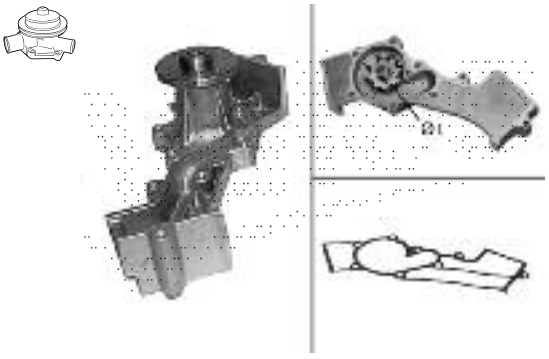

NISSAN 2101012G26

Valeo 506608

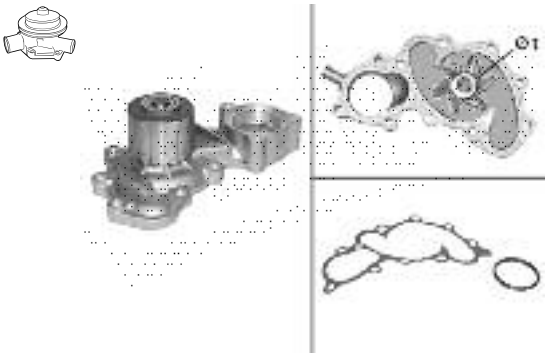

TOYOTA 1610069397

Valeo 506610

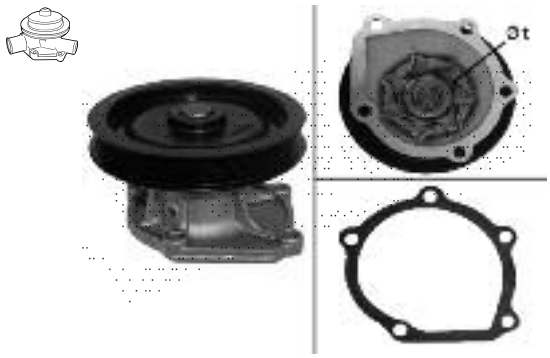

TOYOTA 1610019226

Valeo 506611

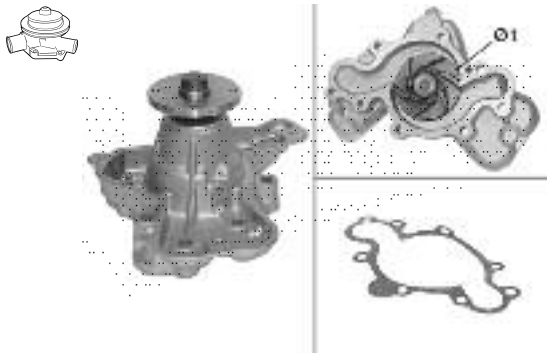

MAZDA 8AL415010A

Valeo 506613

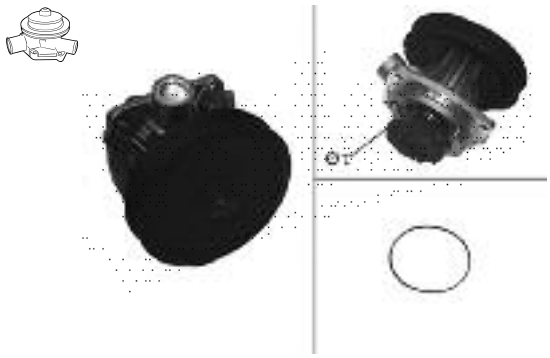

FIAT 46437911

Valeo 506614

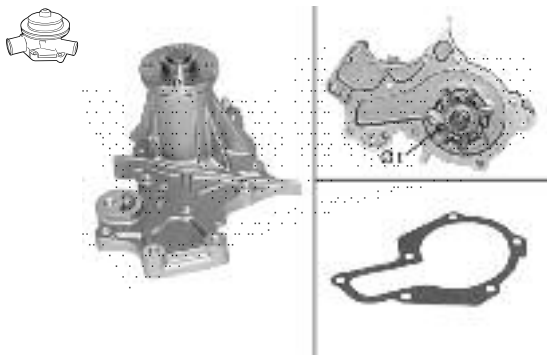

SANTANA 1740060812

Valeo 506616

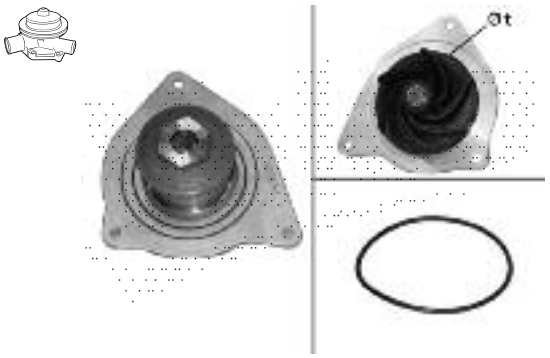

CHRYSLER 4556541

Valeo 506617

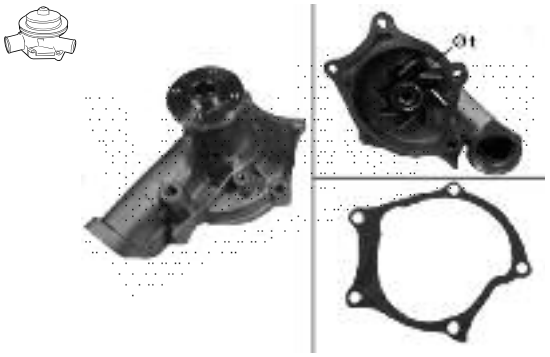

MITSUBISHI MD997622

Valeo 506618

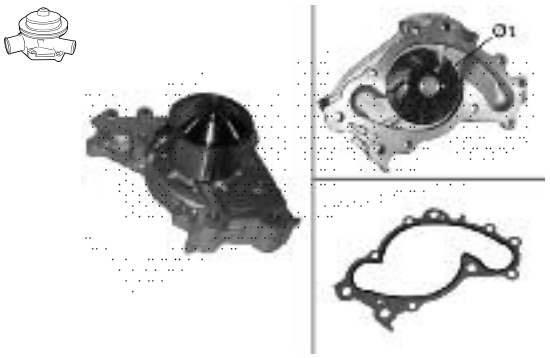

LEXUS 1610029085

Valeo 506619

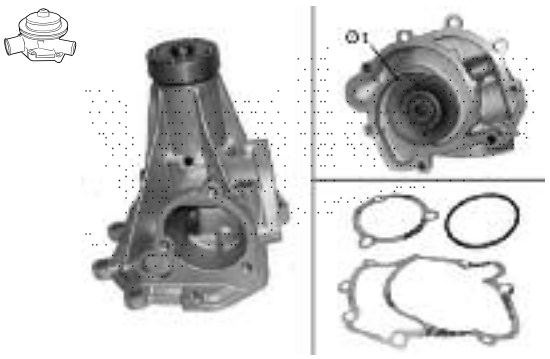

MERCEDES 1162001601

Valeo 506620

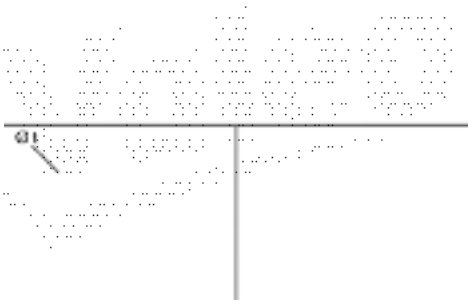

RENAULT 7701466420

Valeo 506622

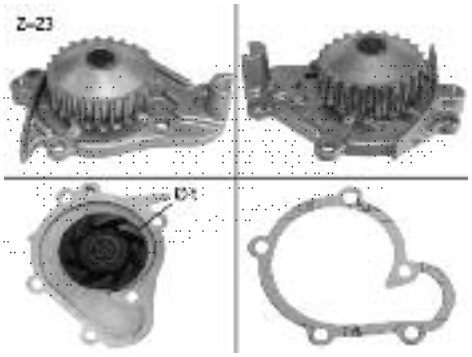

NISSAN 2101019B25

Valeo 506624

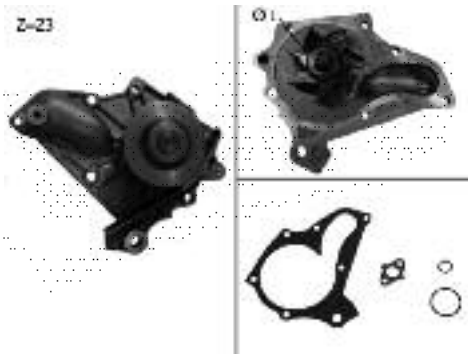

TOYOTA 1610079185

Valeo 506625

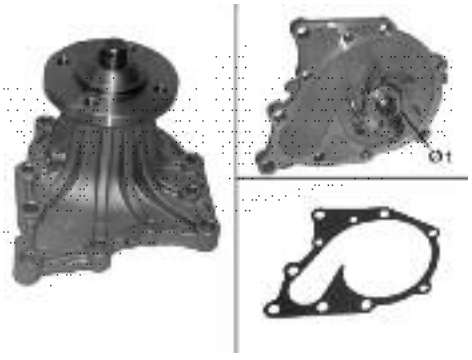

TOYOTA 1610049805

Valeo 506626

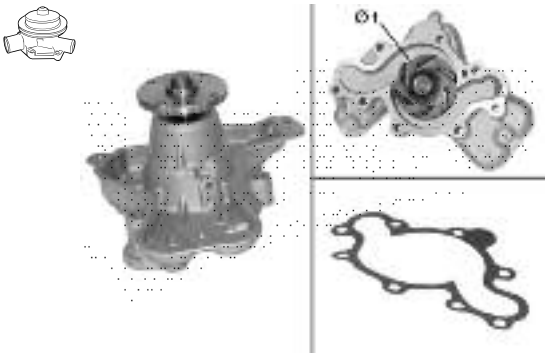

MAZDA 8AH315010B

Valeo 506627

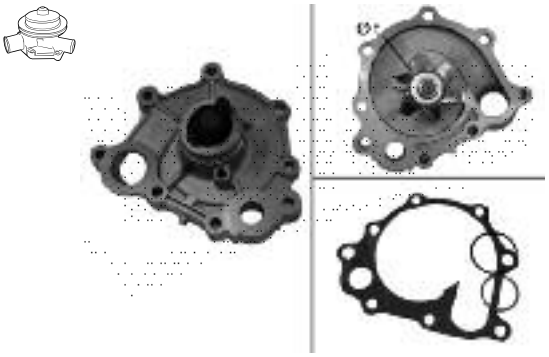

TOYOTA 1610079165

Valeo 506628

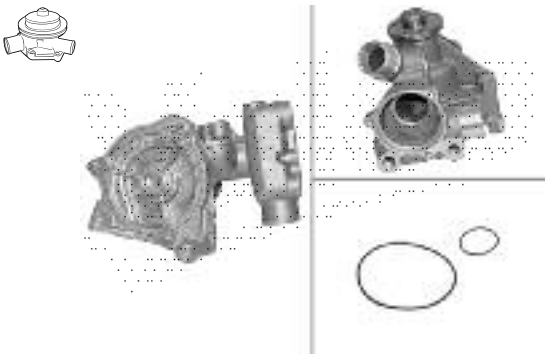

MERCEDES 1042003101

Valeo 506631

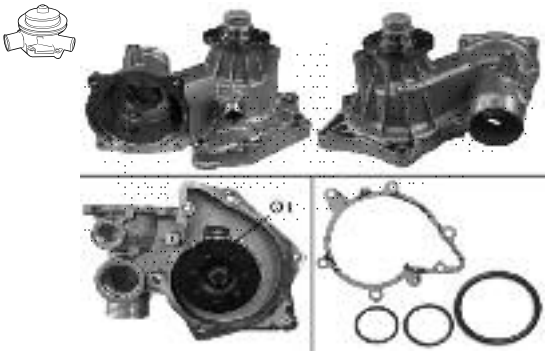

BMW 11510007043

Valeo 506632

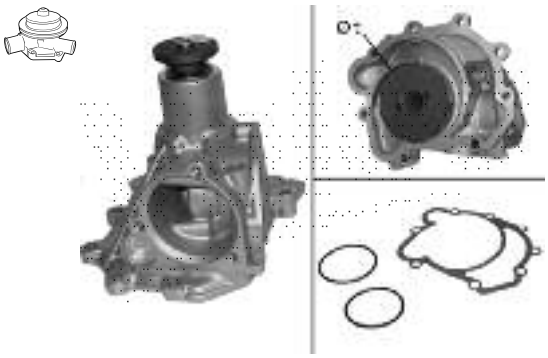

MERCEDES 1192002101

Valeo 506633

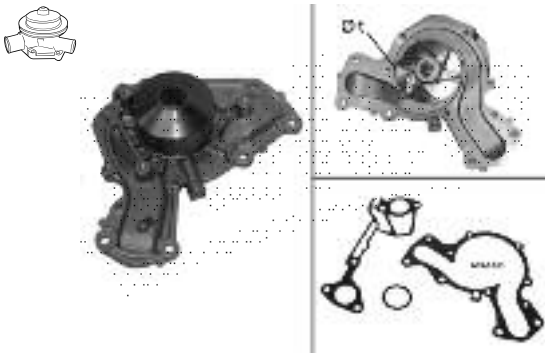

MITSUBISHI MD997643

Valeo 506634

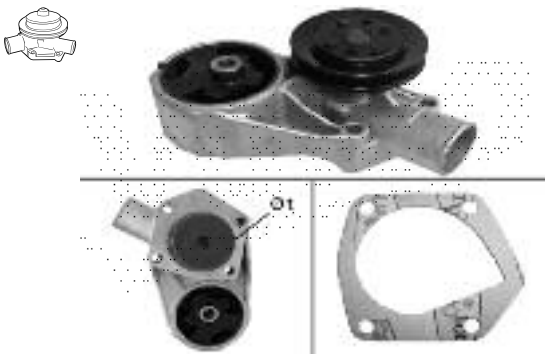

SKODA 115050001

Valeo 506637

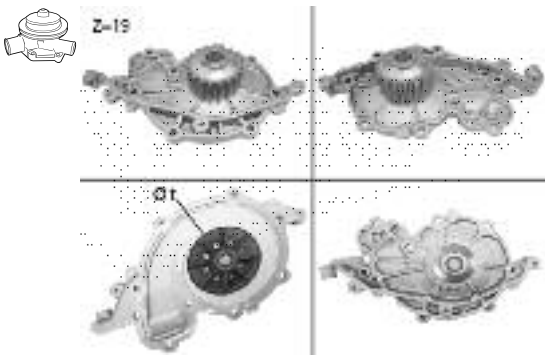

RENAULT 7700106101

Valeo 506639

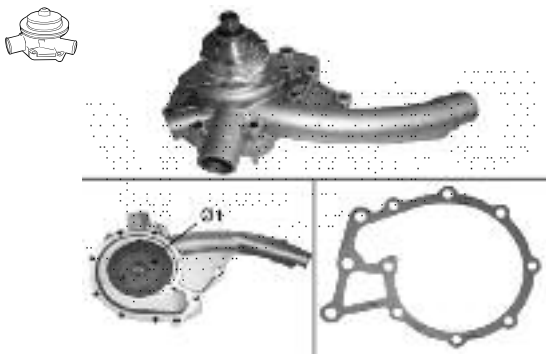

MERCEDES 1022005001

Valeo 506640

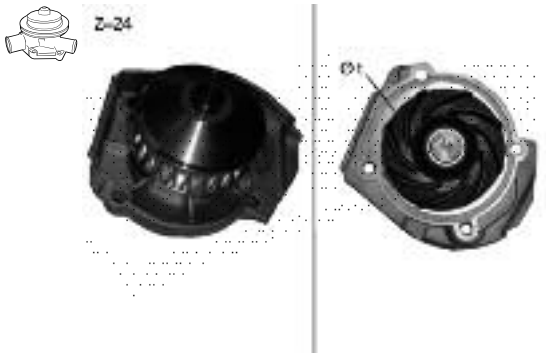

FIAT 55184080

Valeo 506641

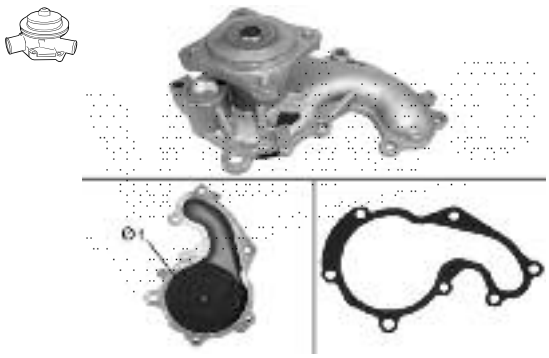

FORD 1131878

Valeo 506642

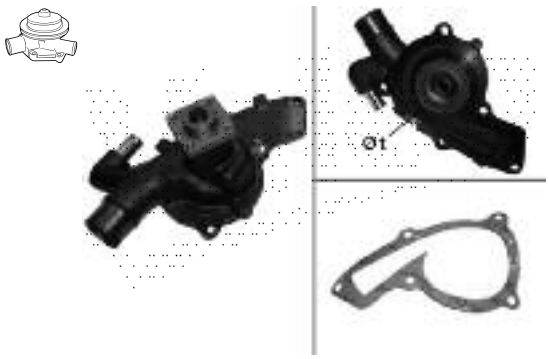

FORD 5020713

Valeo 506643

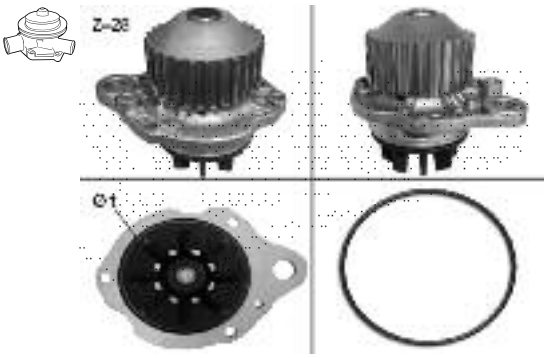

PEUGEOT 1201F6

Valeo 506644

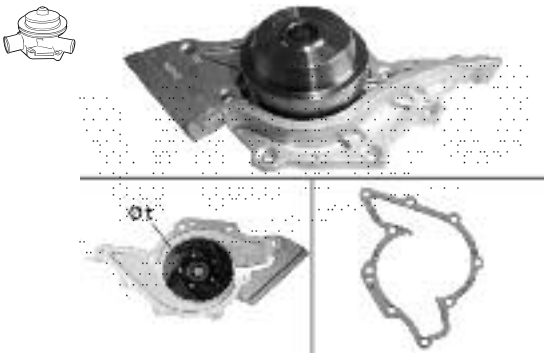

AUDI 077121004A

Valeo 506645

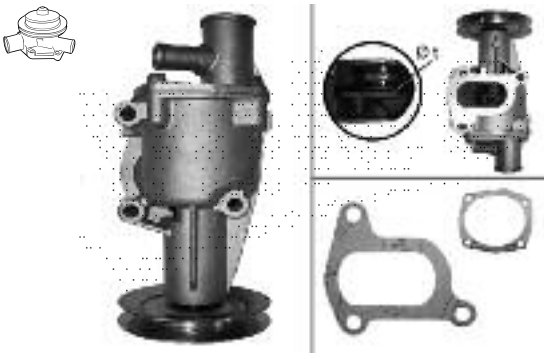

FIAT 7762986

Valeo 506646

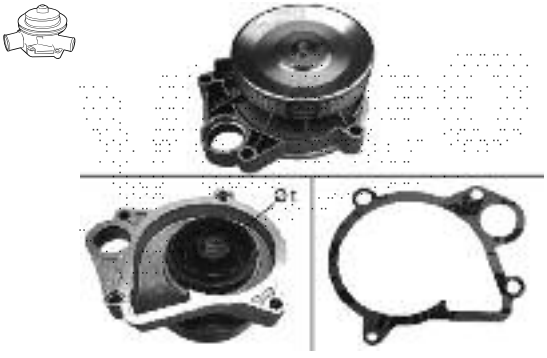

BMW 11512247552

Valeo 506647

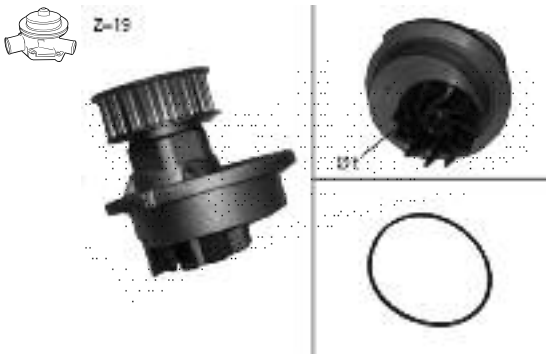

DAEWOO 96352648

Valeo 506648

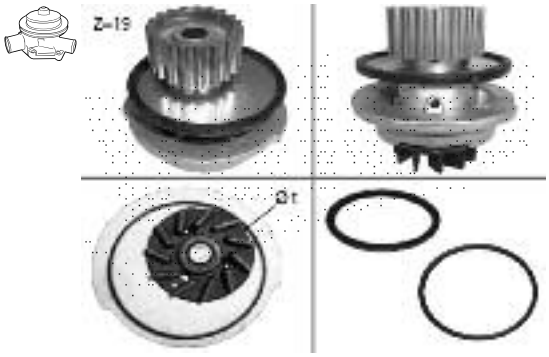

DAEWOO 96352649

Valeo 506649

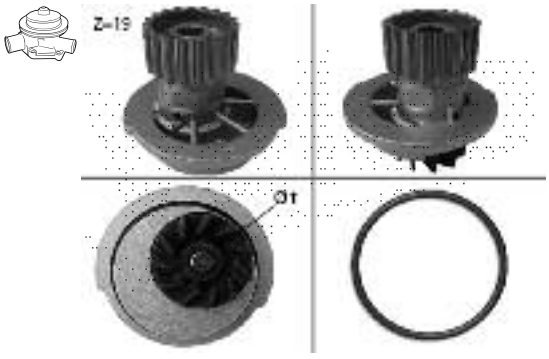

DAEWOO 96352650

Valeo 506650

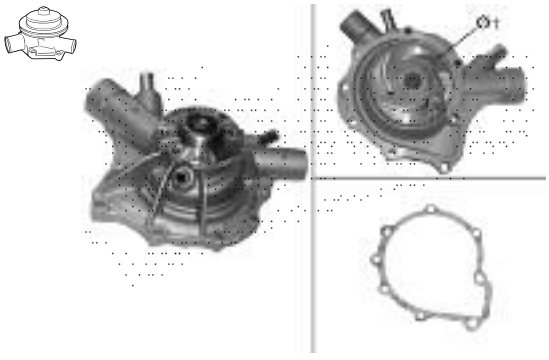

MERCEDES 1112003801

506651

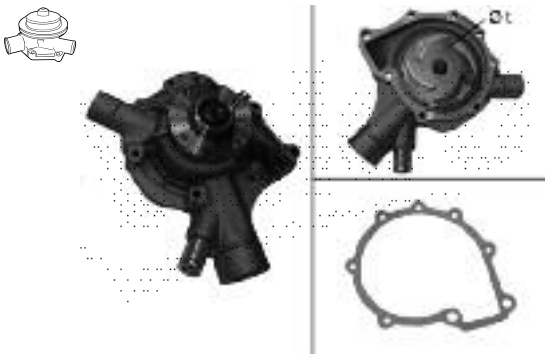

MERCEDES 1112003901

506652

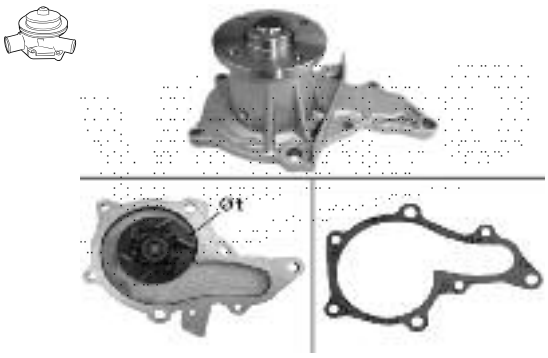

TOYOTA 1610019295

506653

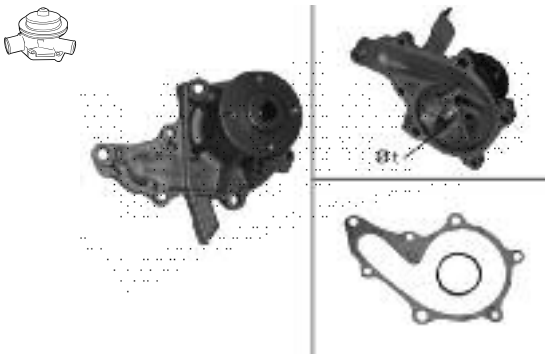

TOYOTA 1610009060

506655

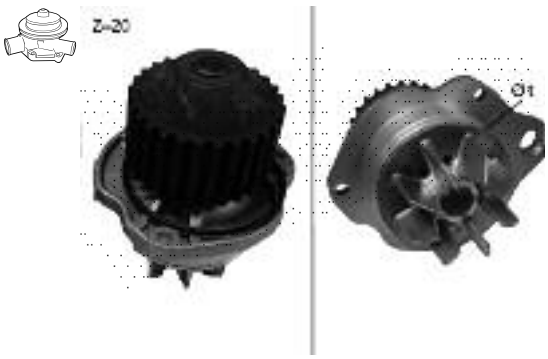

RENAULT 8200146297

506656

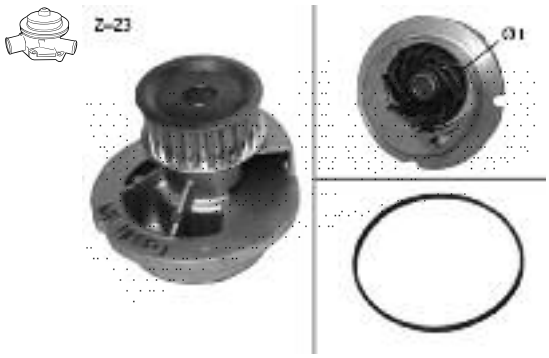

SAAB 90543935

506657

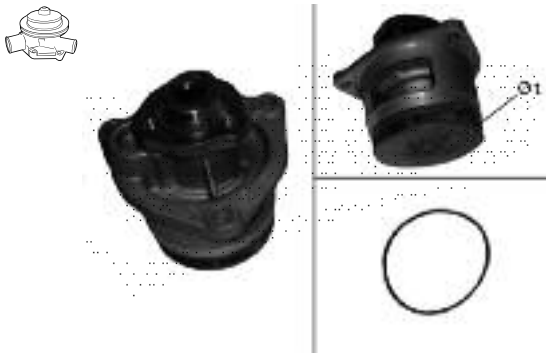

VAUXHALL 90540478

506659

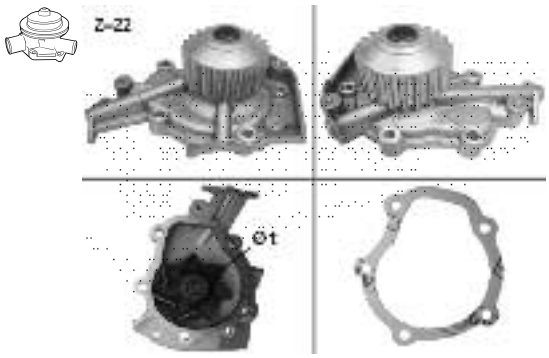

SUZUKI 1740050812

506660

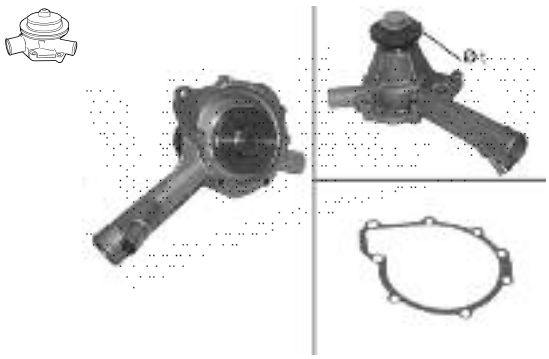

MERCEDES 1112002301

Valeo 506661

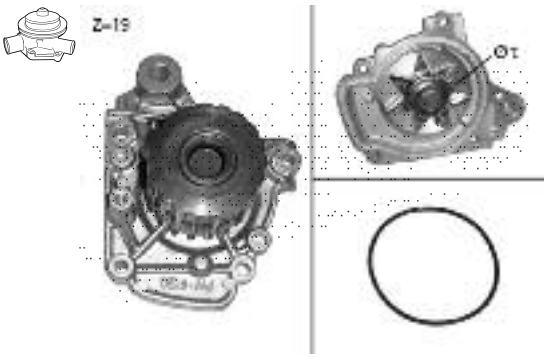

HONDA 19200P2AA02

Valeo 506662

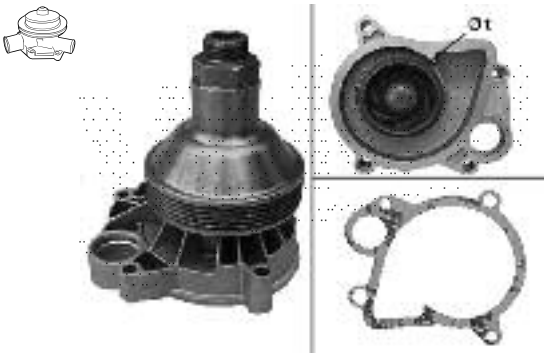

BMW 11517786736

Valeo 506663

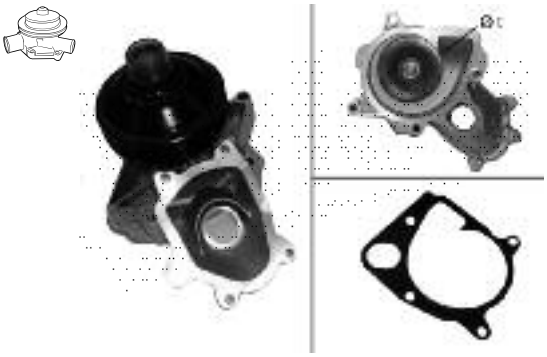

BMW 11517786192

Valeo 506664

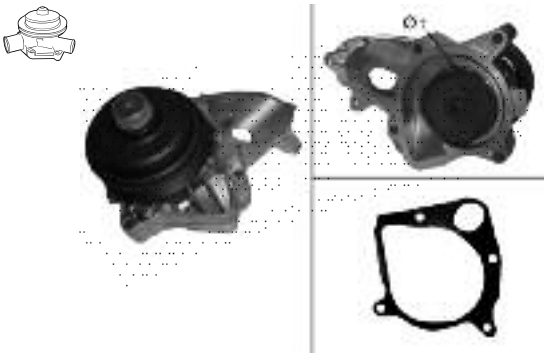

BMW 11512354055

Valeo 506666

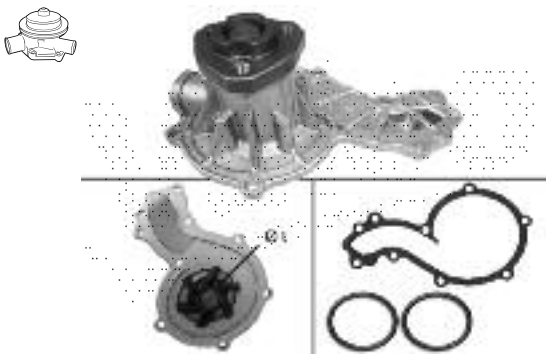

AUDI 026121010C

Valeo 506667

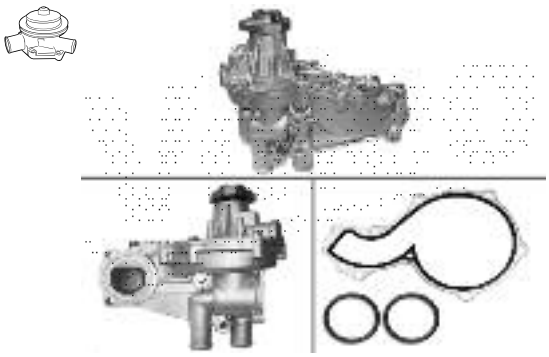

AUDI 026121010C

Valeo 506669

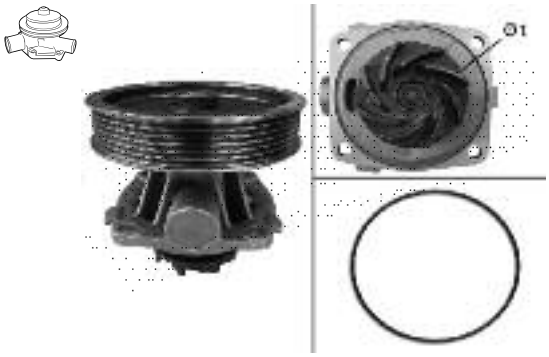

CITROËN 120195

Valeo 506670

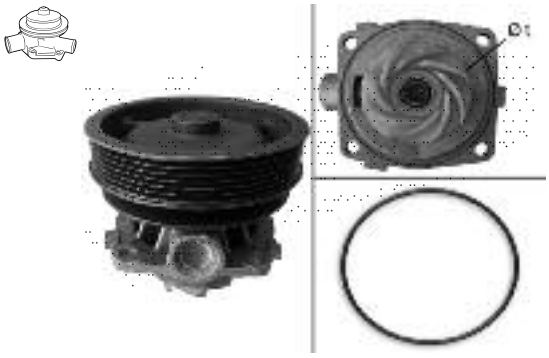

CITROËN 120196

Valeo 506671

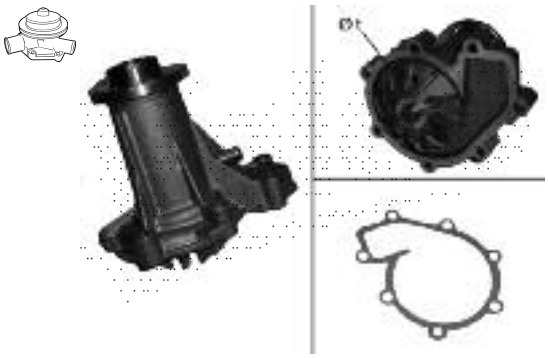

MERCEDES 6052000820

Valeo 506672

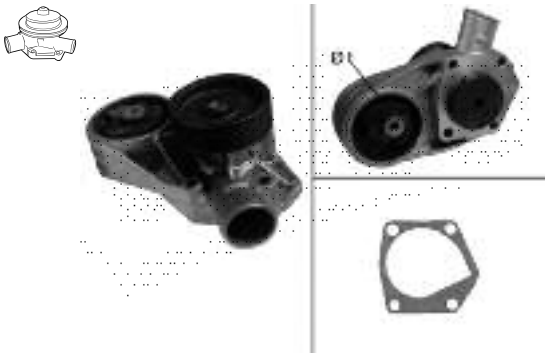

SKODA 047121011B

Valeo 506673

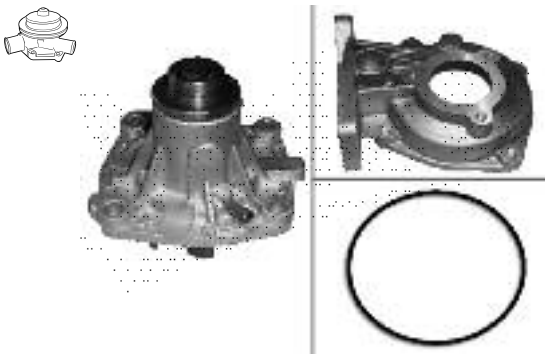

ALFA ROMEO 0060562567

Valeo 506674

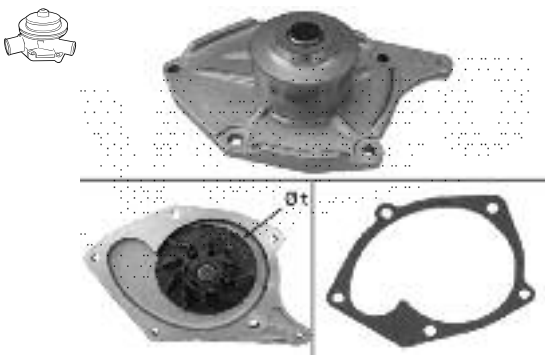

RENAULT 7701476496

Valeo 506675

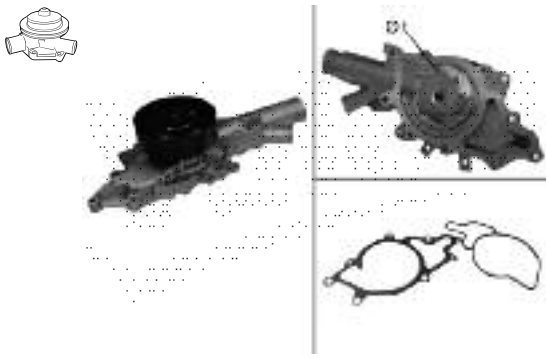

MERCEDES 6132000701

Valeo 506676

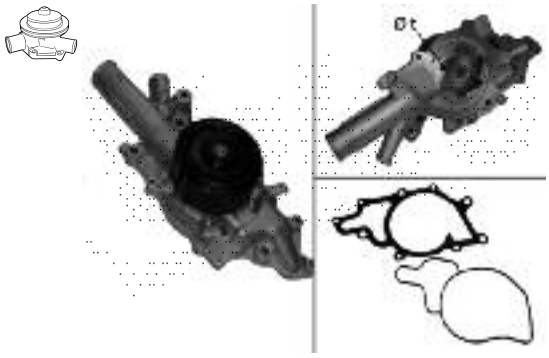

MERCEDES 6112001201

Valeo 506677

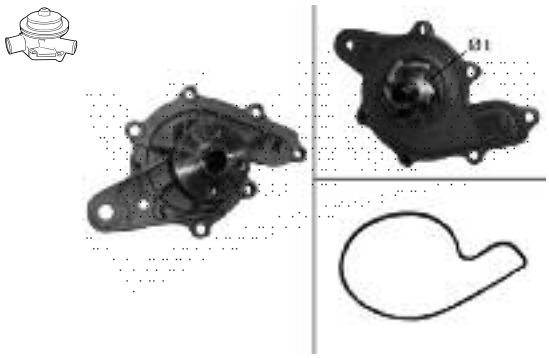

SMART 0004681V002000000

Valeo 506678

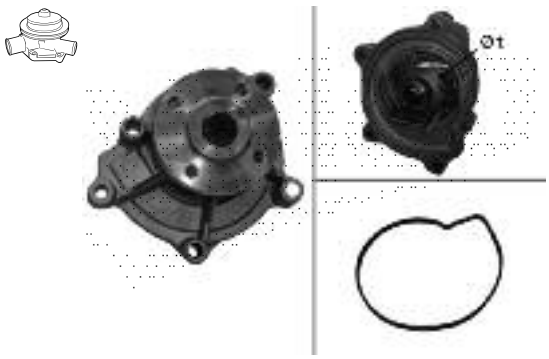

MERCEDES 1662000720

Valeo 506679

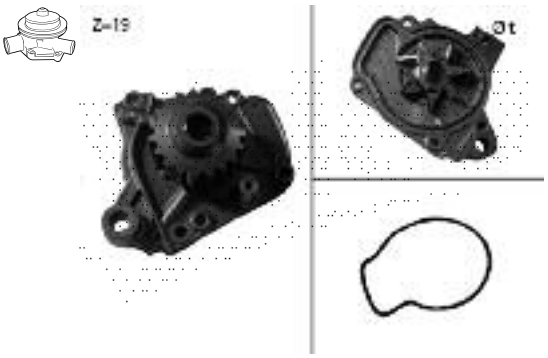

HONDA 19200P7A003

Valeo 506680

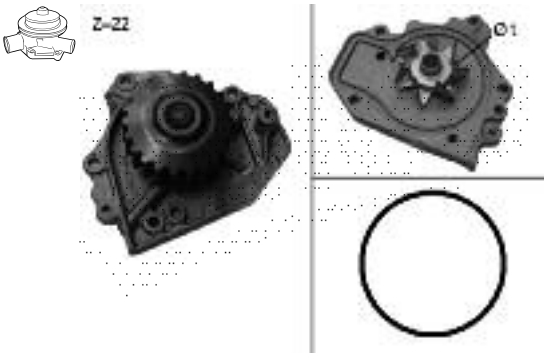

HONDA 19200P72013

Valeo 506682

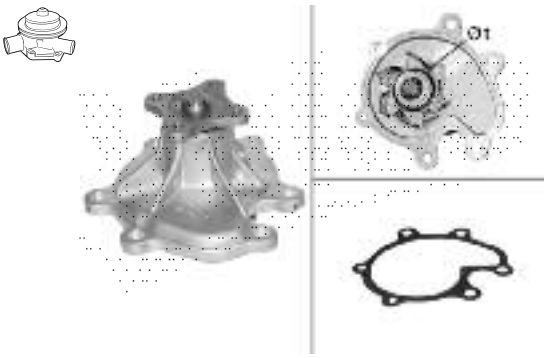

NISSAN 2101030R05

Valeo 506685

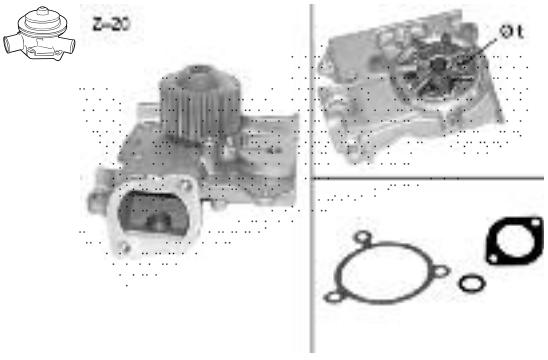

MAZDA 8AG115010B

Valeo 506686

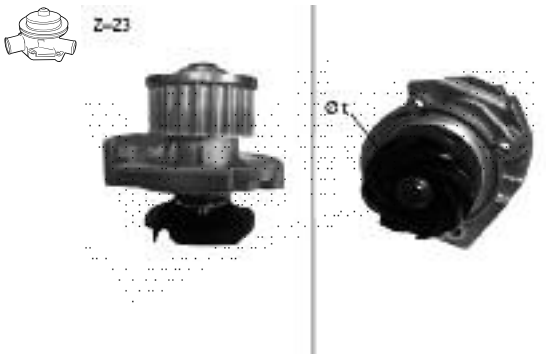

LANCIA 55184081

Valeo 506689

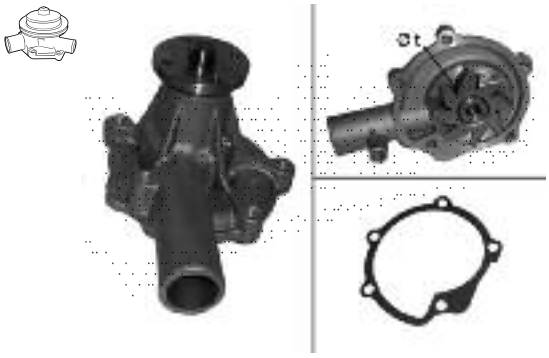

MITSUBISHI MD997158

Valeo 506691

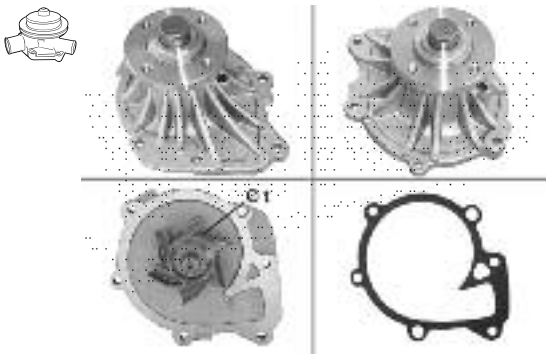

TOYOTA 1610069325

Valeo 506692

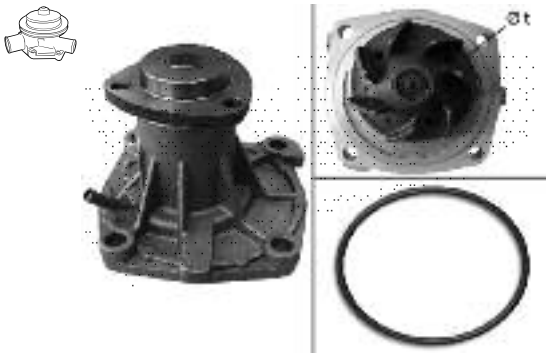

VAUXHALL 91151669

Valeo 506693

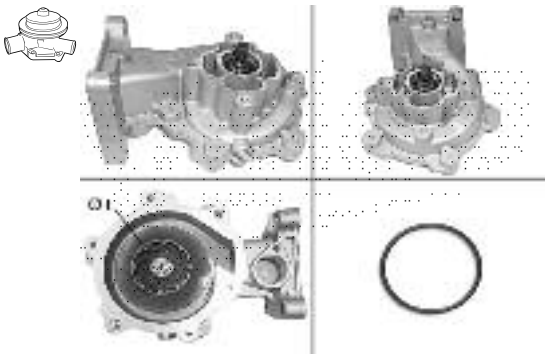

FORD 1347102

Valeo 506694

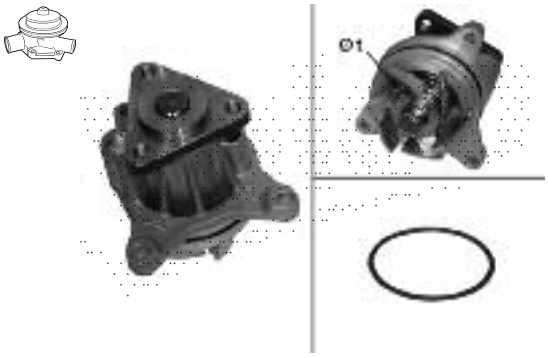

FORD 1434347

Valeo 506695

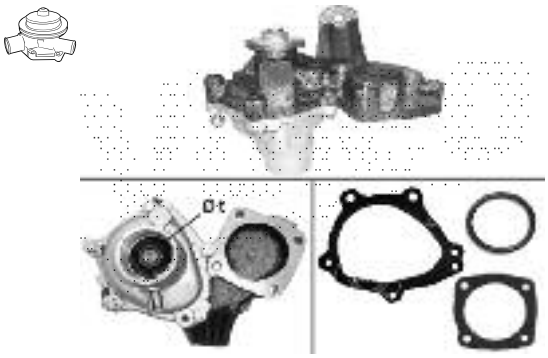

FIAT 46410562

Valeo 506696

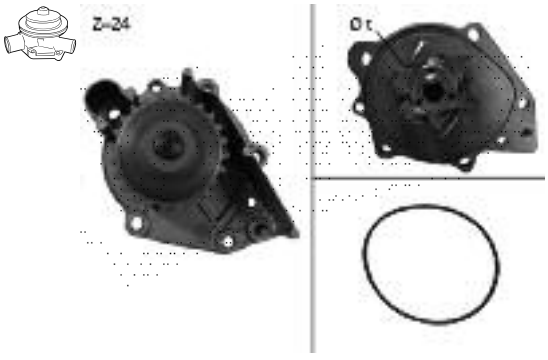

MG PEB102510

Valeo 506697

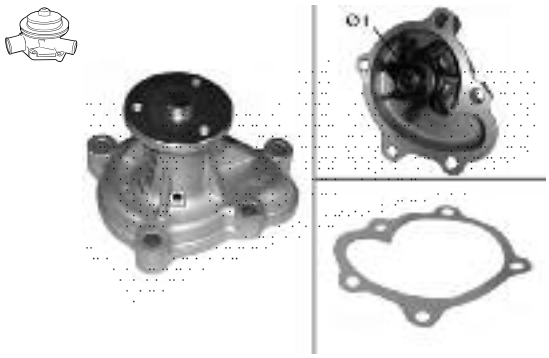

OPEL 6334019

Valeo 506698

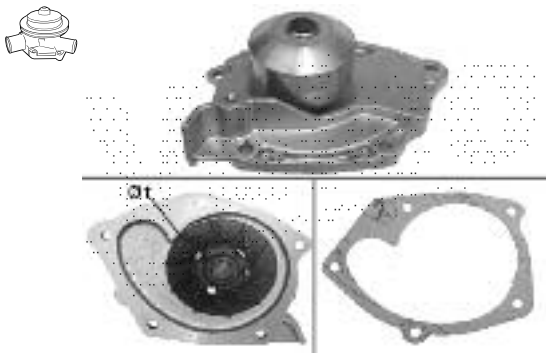

OPEL 4408028

Valeo 506699

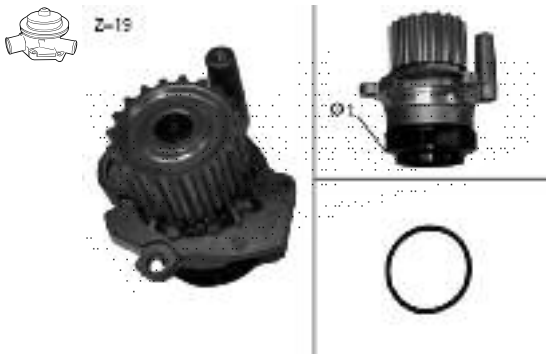

AUDI 038121011K

Valeo 506700

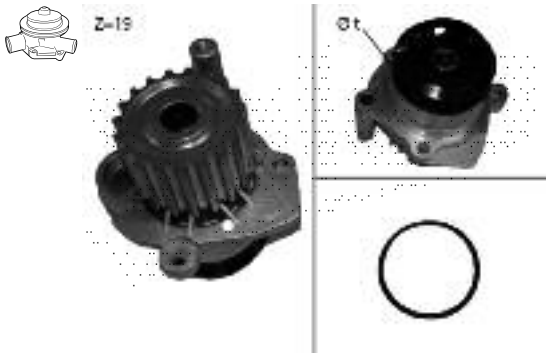

SEAT 045121011H

Valeo 506701

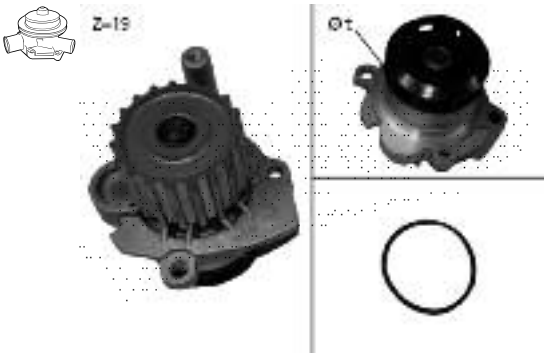

SKODA 045121011J

Valeo 506702

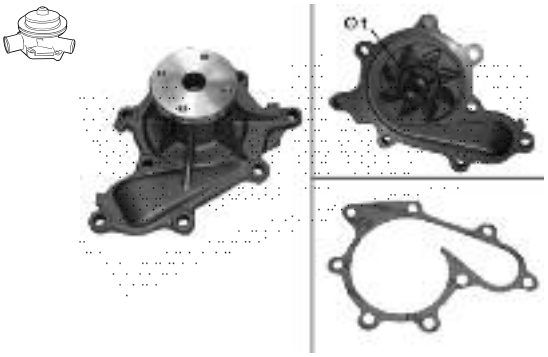

NISSAN 21010AD226

Valeo 506703

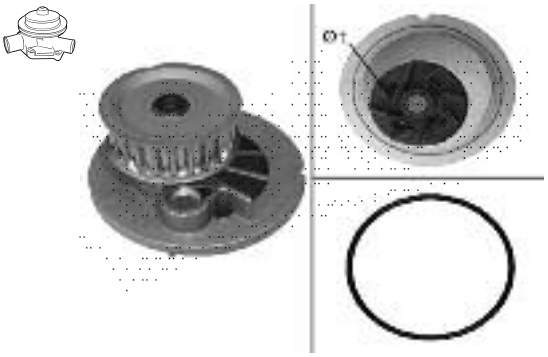

VAUXHALL 93182038

Valeo 506704

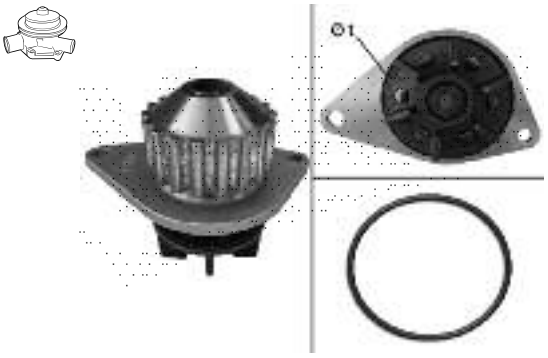

PEUGEOT 1201G0

Valeo 506705

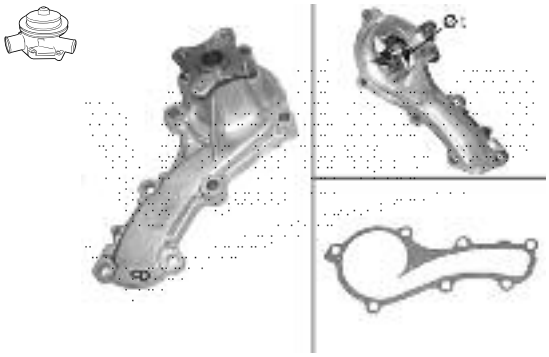

NISSAN 210109F605

Valeo 506706

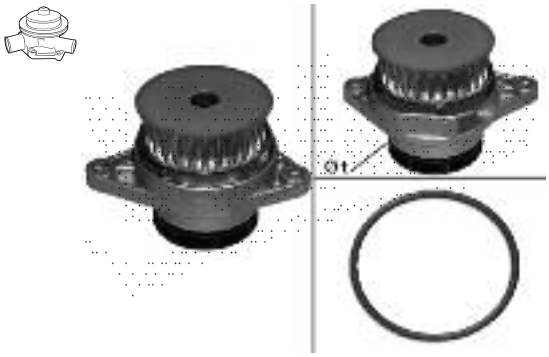

AUDI 036121008G

Valeo 506707

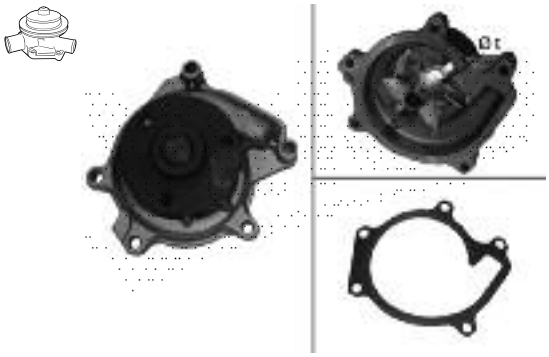

TOYOTA 1610029116

Valeo 506708

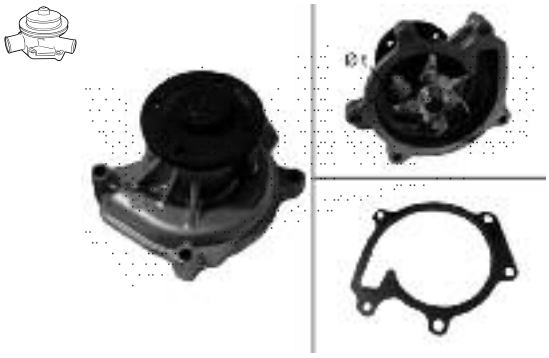

TOYOTA 1610009141

Valeo 506709

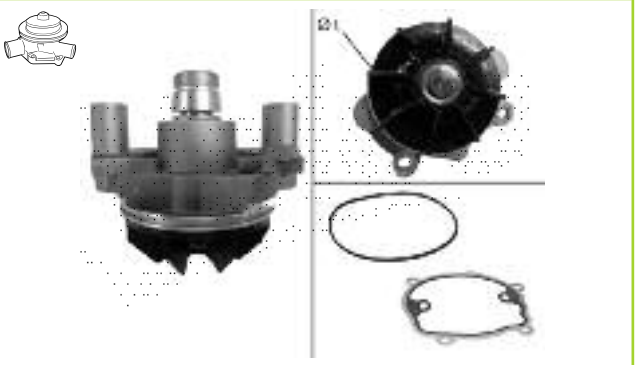

RENAULT 7701472625

Valeo 506710

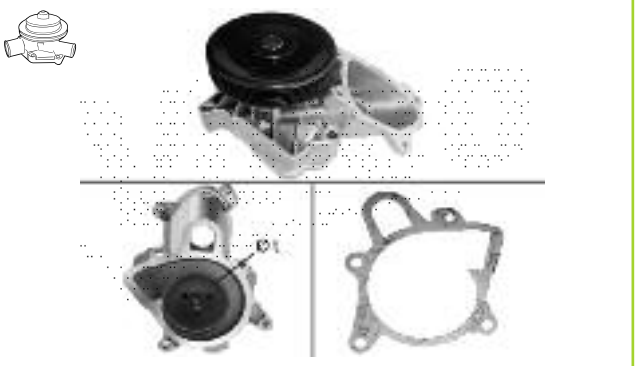

ROVER GWP2604

Valeo 506711

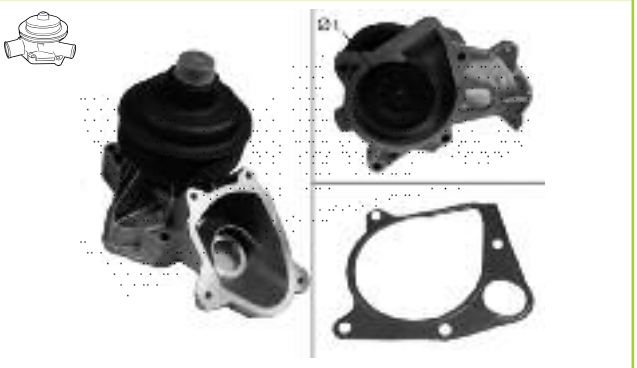

BMW 11517794247

Valeo 506712

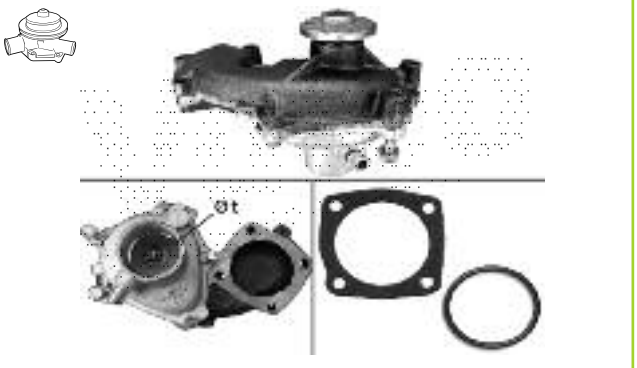

FIAT 46757574

Valeo 506713

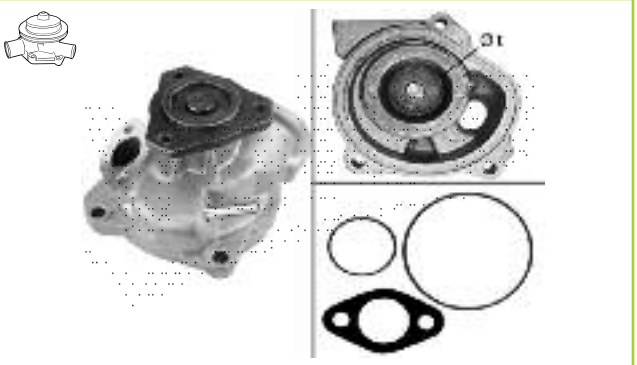

VOLKSWAGEN 025121010BX

Valeo 506714

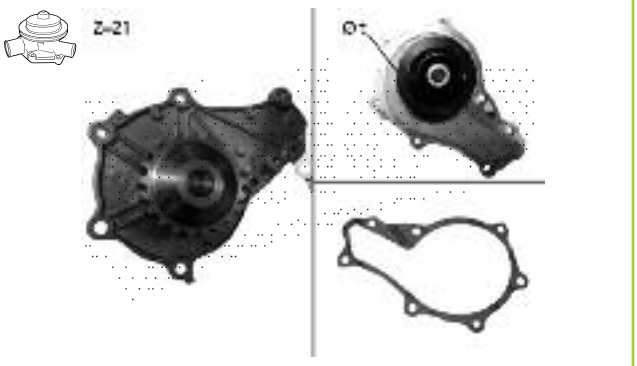

MAZDA Y40115010A

Valeo 506715

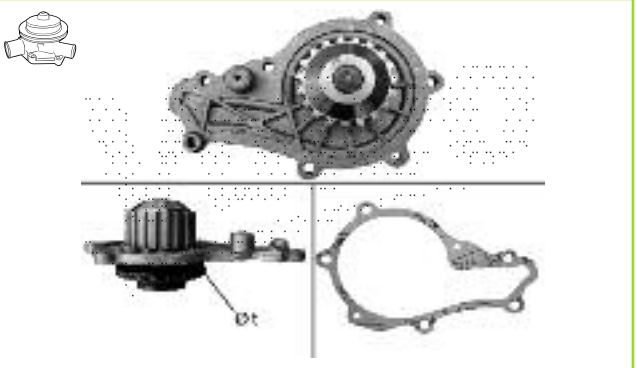

MAZDA Y60115010B

Valeo 506716

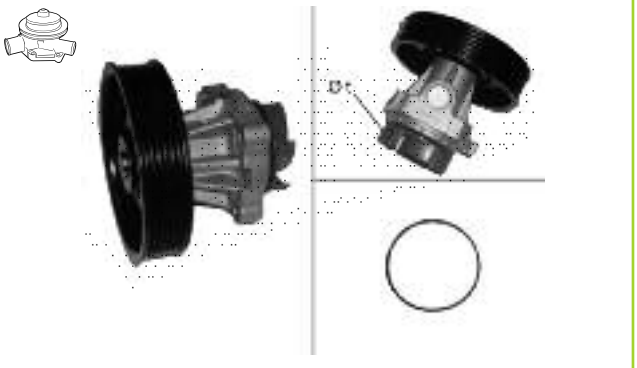

FIAT 71745026

Valeo 506717

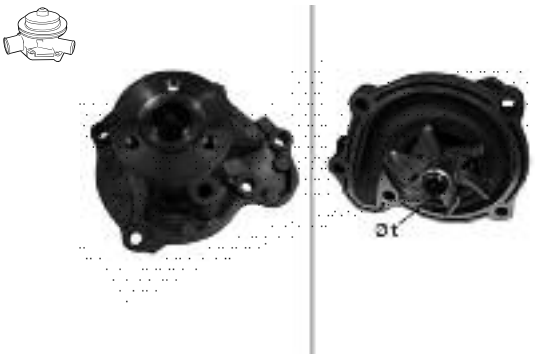

NISSAN 21010BX000

Valeo 506719

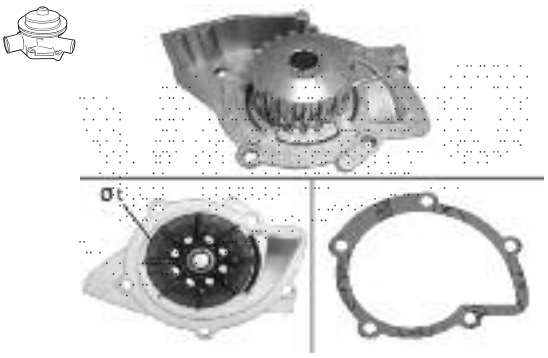

CITROËN 1201E8

Valeo 506720

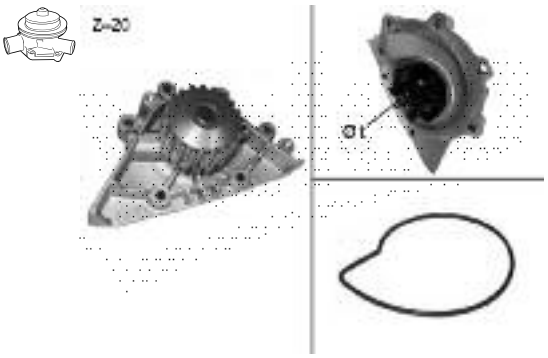

CITROËN 1201J1

Valeo 506721

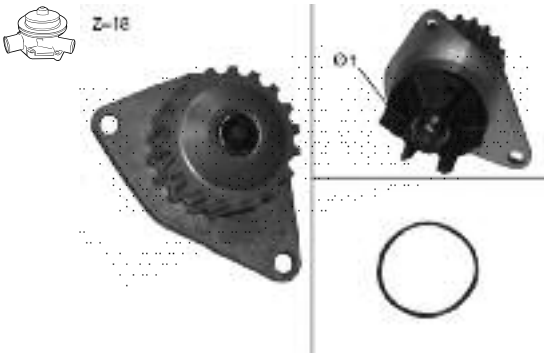

CITROËN 1201G2

Valeo 506722

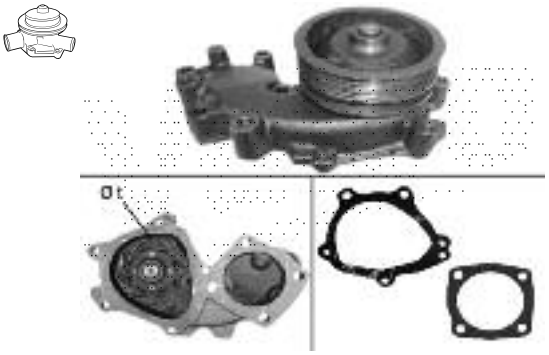

LANCIA 71737987

Valeo 506723

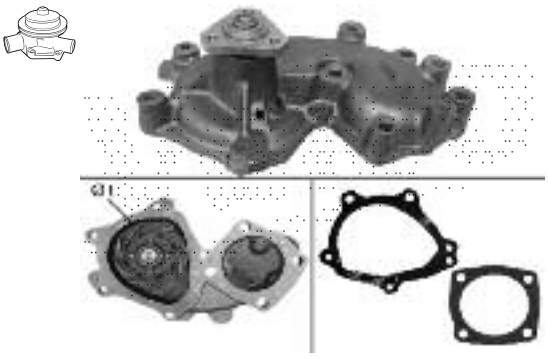

ALFA ROMEO 0060812263

Valeo 506725

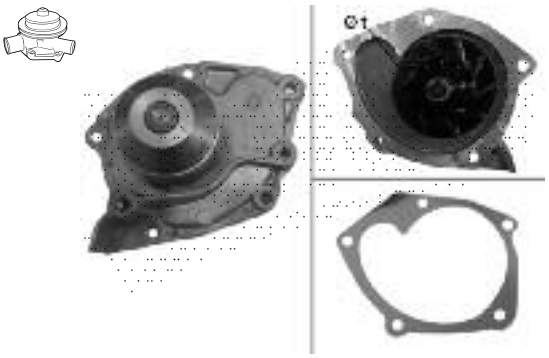

NISSAN 21010AW300

Valeo 506726

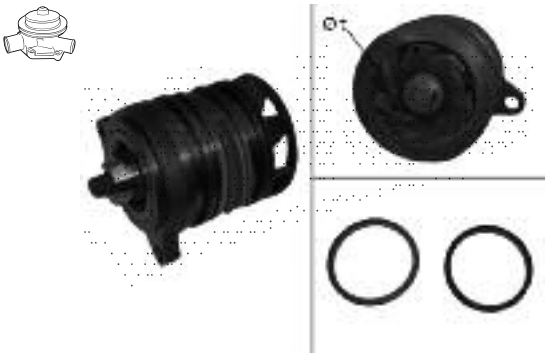

VOLKSWAGEN 070121011D

Valeo 506728

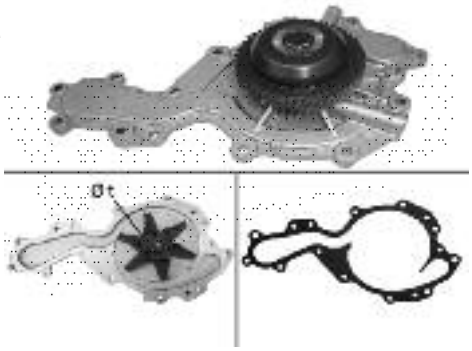

VAUXHALL 97730781

Valeo 506729

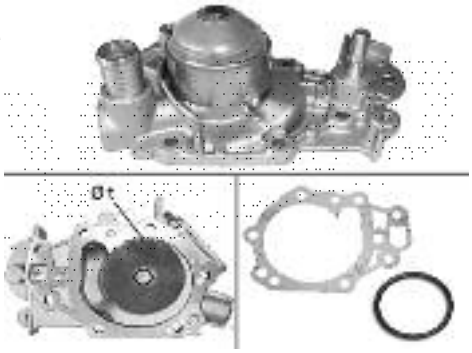

RENAULT 8200266947

Valeo 506730

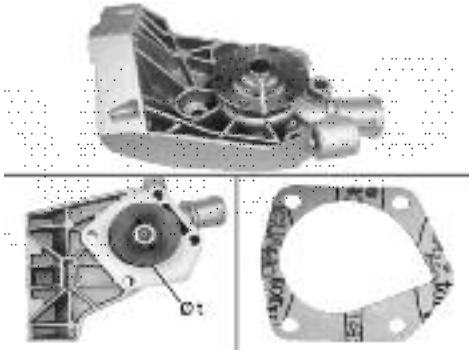

SKODA 047121013R

Valeo 506731

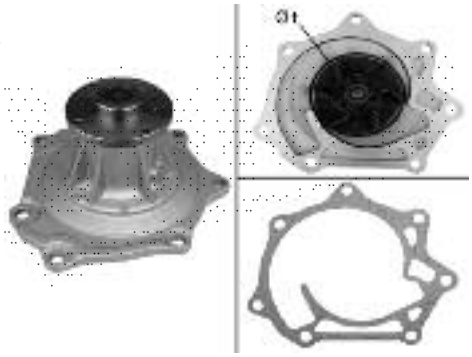

NISSAN 2101069T02

Valeo 506732

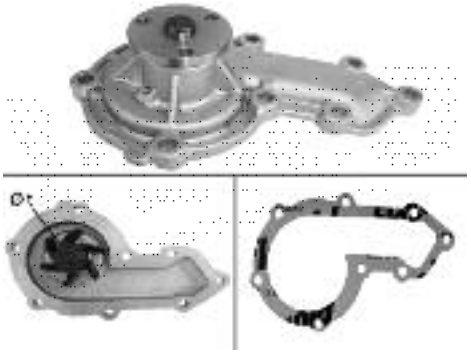

LAND ROVER STC1086

Valeo 506733

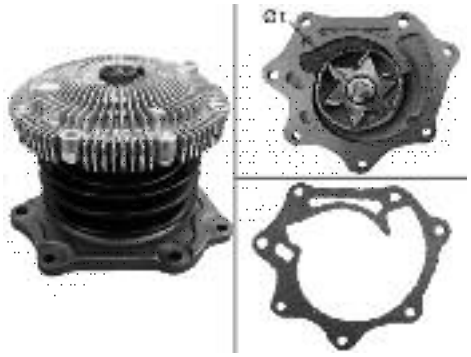

NISSAN 210107F400

Valeo 506734

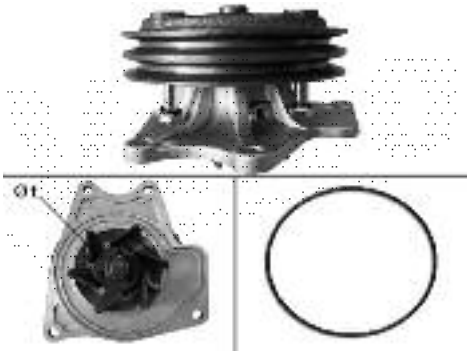

MITSUBISHI ME993473

Valeo 506736

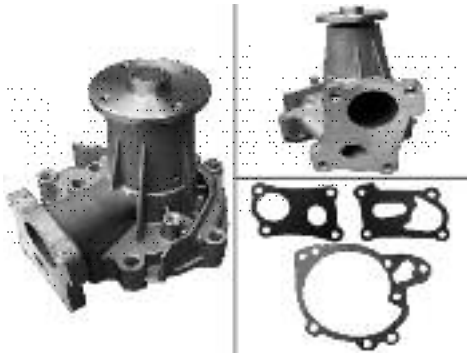

GALLOPER 2510042541

Valeo 506737

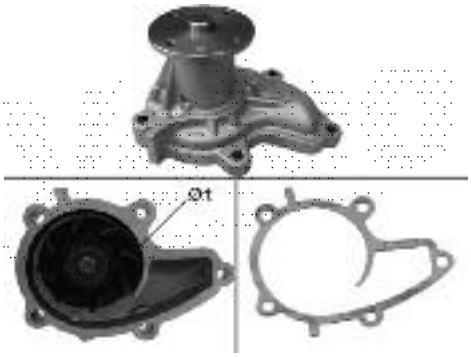

NISSAN 2101057J27

Valeo 506777

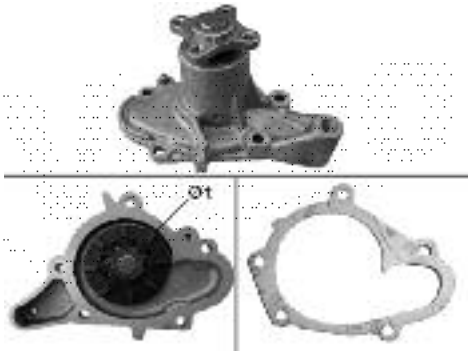

HYUNDAI 2510002502

Valeo 506778

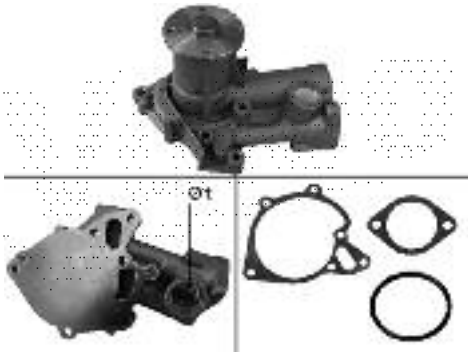

MITSUBISHI MD972001

Valeo 506779

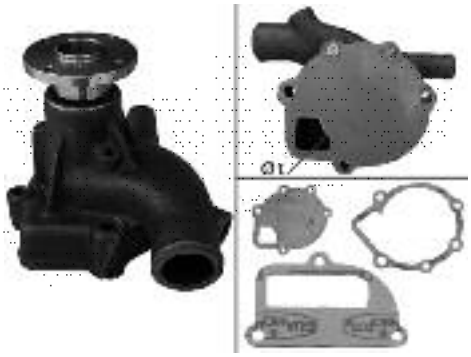

NISSAN 2101037528

Valeo 506780

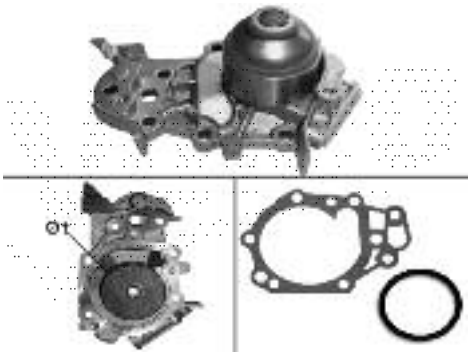

RENAULT 8200702750

Valeo 506781

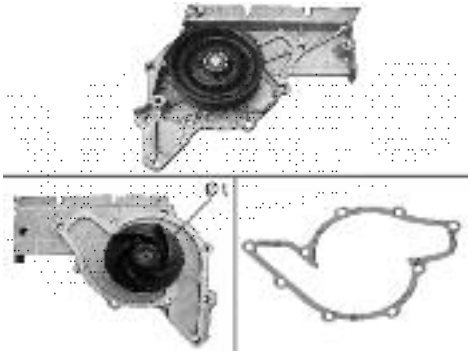

AUDI 06C121004H

Valeo 506782

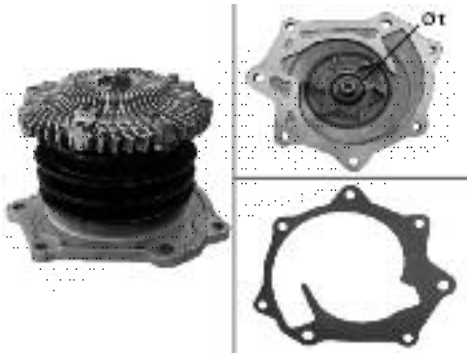

NISSAN 2101043G28

Valeo 506783

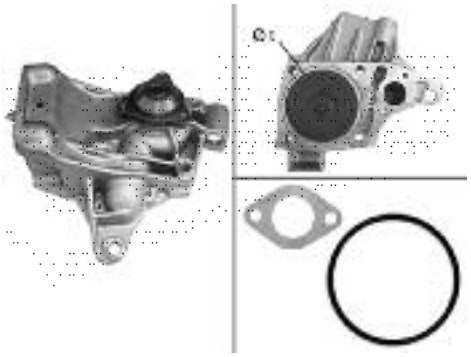

RENAULT 7701470879

Valeo 506784

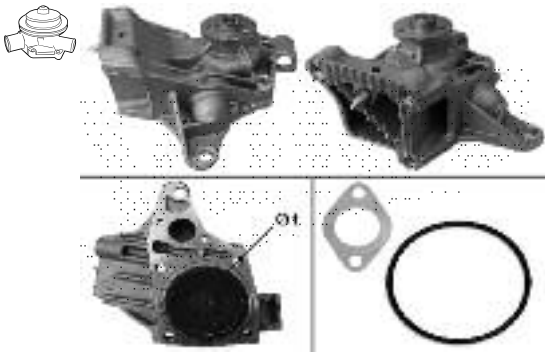

RENAULT 7701470880

Valeo 506785

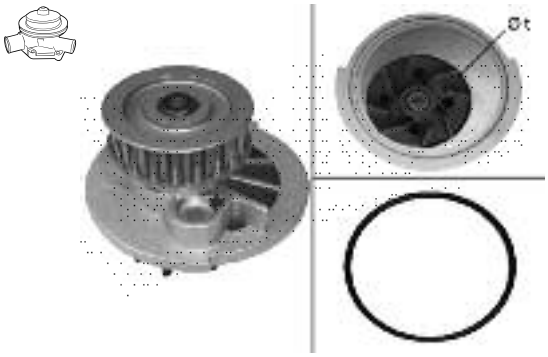

VAUXHALL 9199595

Valeo 506786

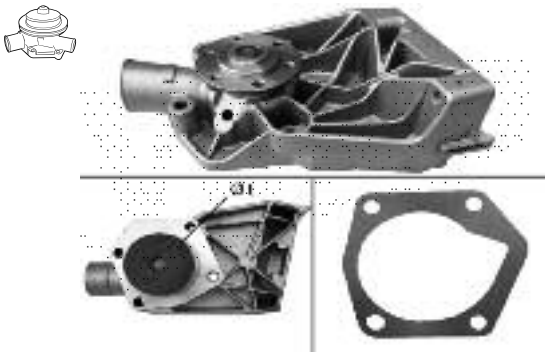

SEAT 047121013J

Valeo 506787

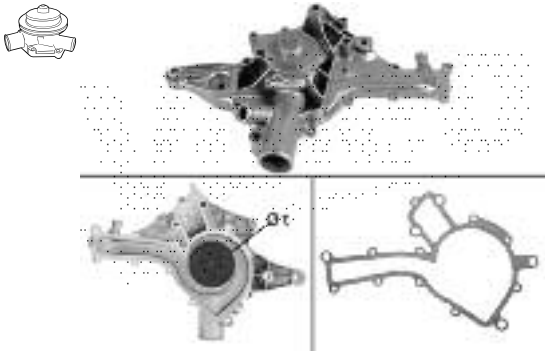

MERCEDES 1122001401

Valeo 506788

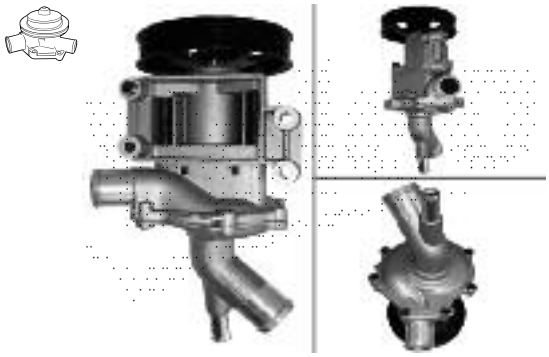

MINI 11517510803

Valeo 506789

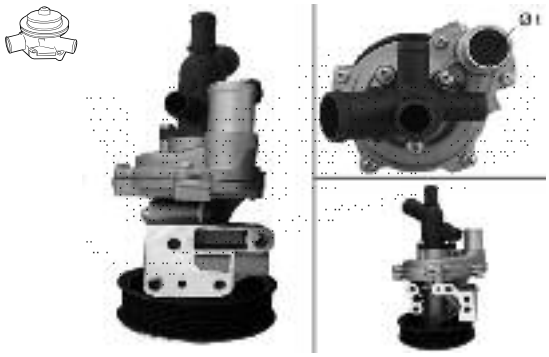

FORD 1385827

Valeo 506790

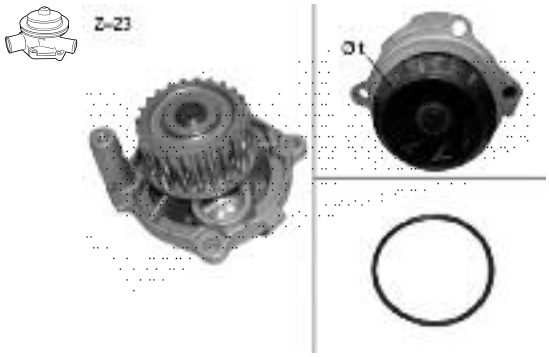

AUDI 06B121011MX

Valeo 506792

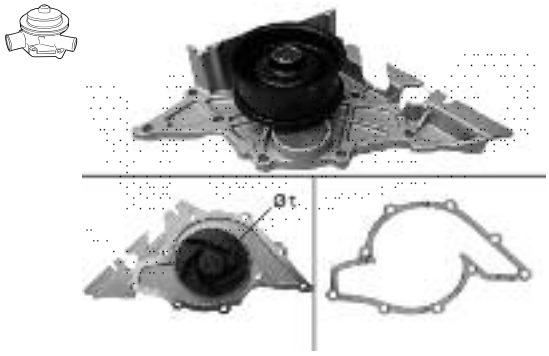

AUDI 078121004A

Valeo 506794

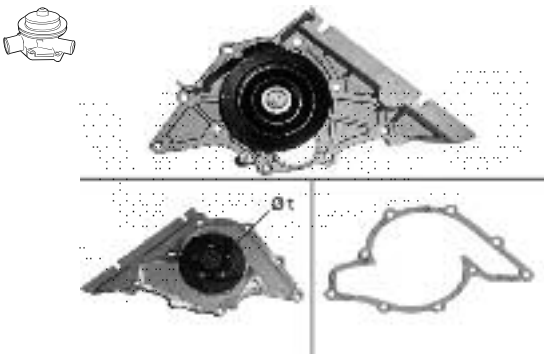

AUDI 077121004M

Valeo 506795

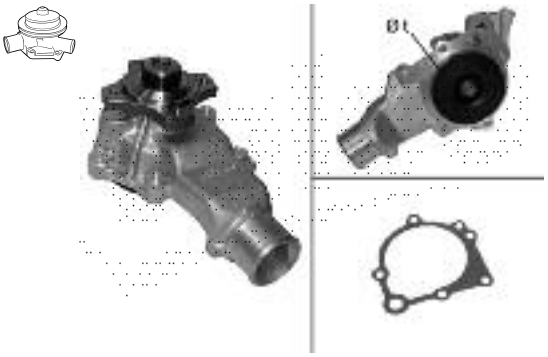

JEEP 5012366AC

Valeo 506798

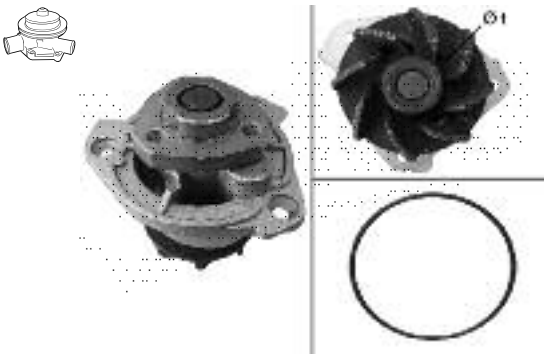

VOLKSWAGEN 022121011

Valeo 506799

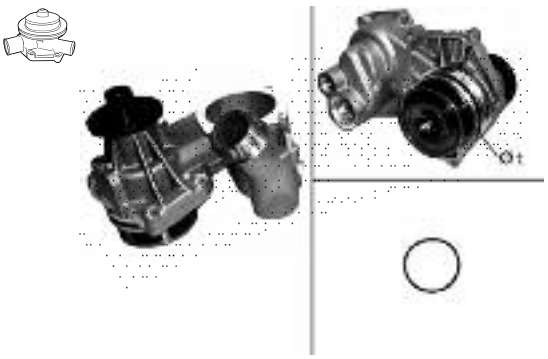

BMW 11511741980

Valeo 506800

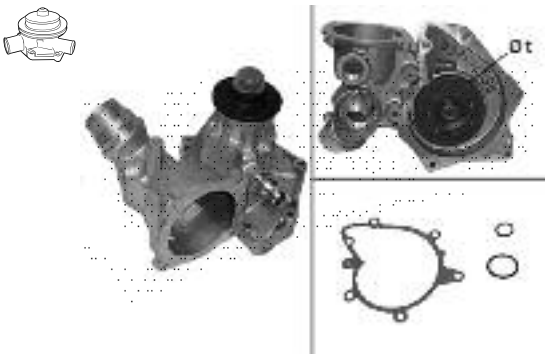

BMW 11511713266

Valeo 506803

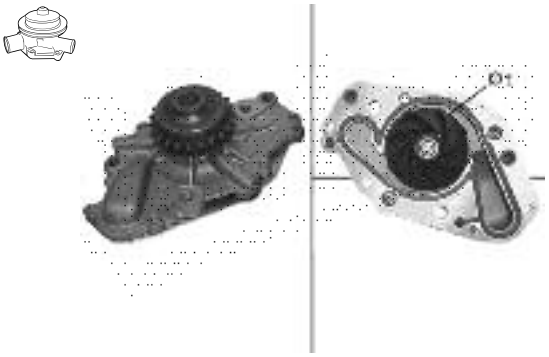

CHRYSLER 4663732

Valeo 506808

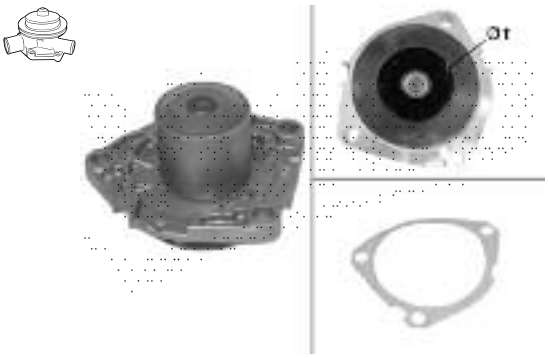

LANCIA 46804051

Valeo 506809

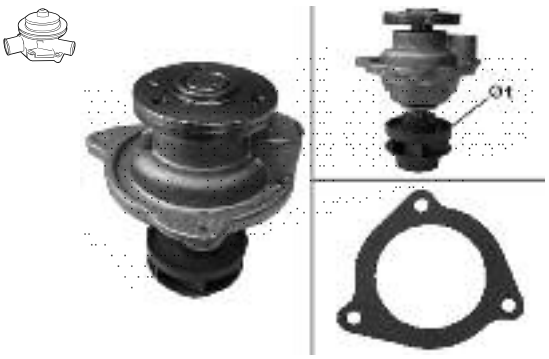

FORD 1229571

Valeo 506810

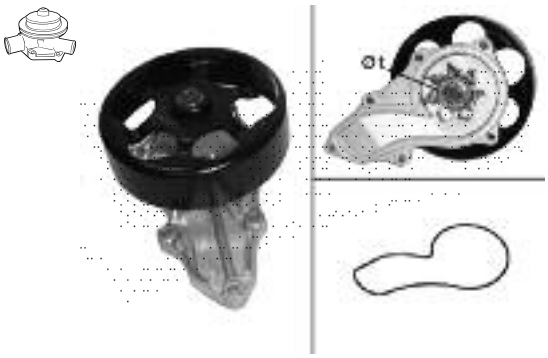

HONDA 19200PNA003

Valeo 506811

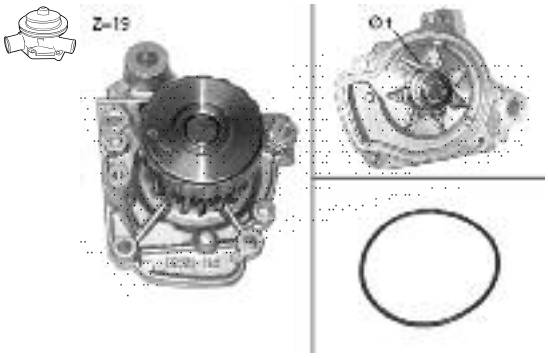

HONDA 19200PLMA01

Valeo 506812

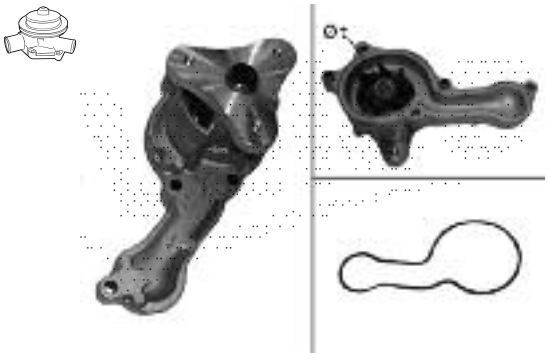

HONDA 19200-PWA-003

Valeo 506813

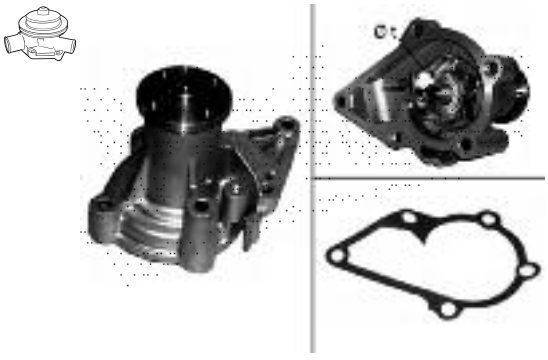

HYUNDAI 2510026550

Valeo 506814

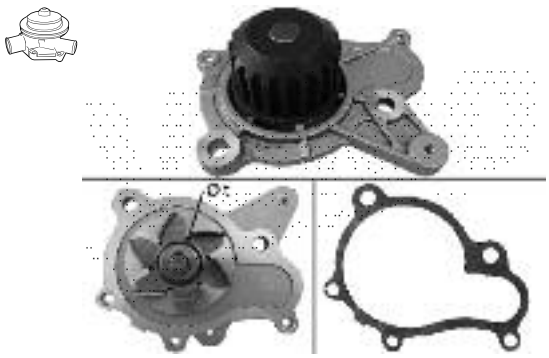

HYUNDAI 2510027000

Valeo 506815

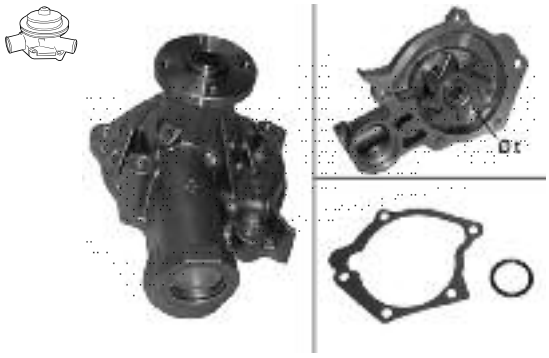

MITSUBISHI MD974899

Valeo 506816

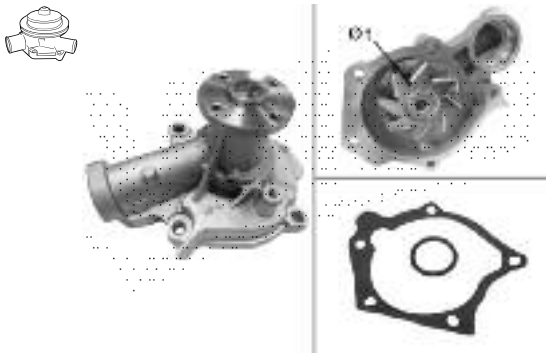

HYUNDAI 2510038002

Valeo 506817

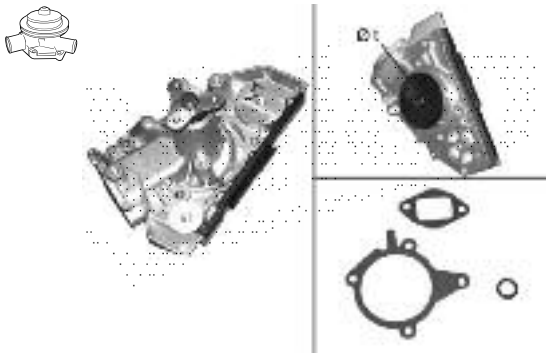

KIA 251002X200

Valeo 506818

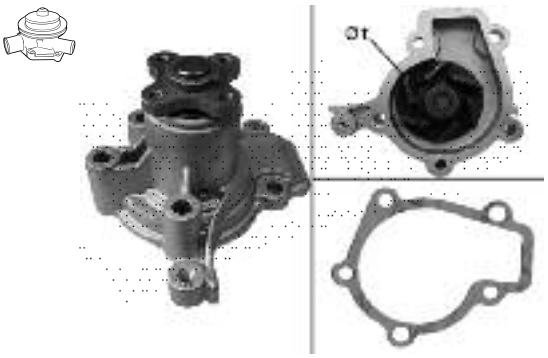

KIA 2510023530

Valeo 506819

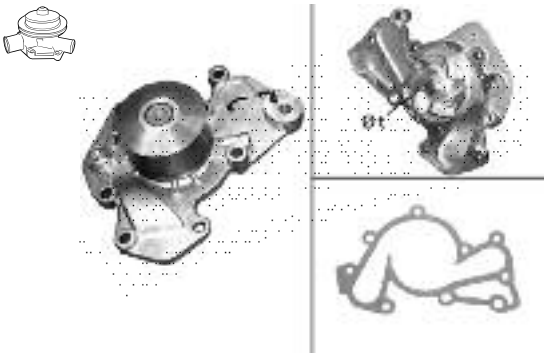

HYUNDAI 2510037102

Valeo 506820

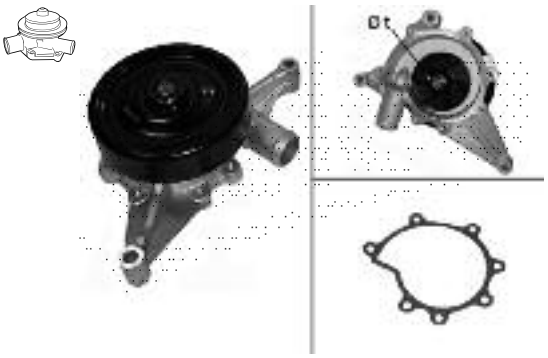

JAGUAR AJ84817

Valeo 506821

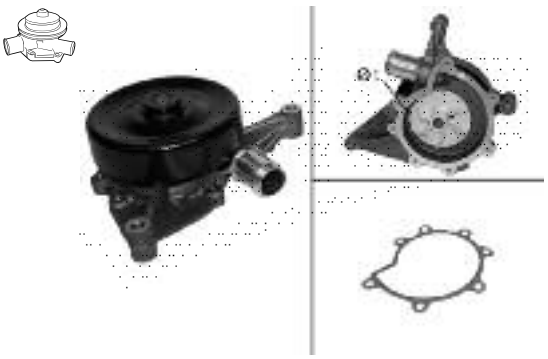

JAGUAR XR813290

Valeo 506823

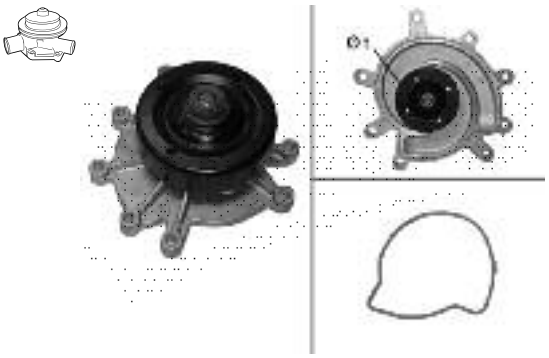

JEEP 53021187AA

Valeo 506825

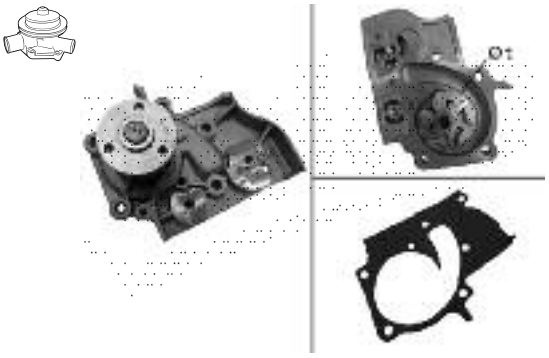

KIA 0K24715010C

Valeo 506826

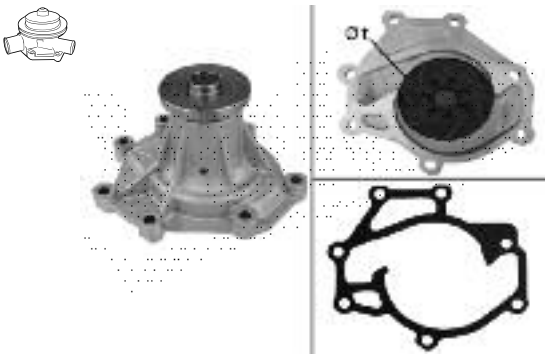

KIA 251004A000

Valeo 506827

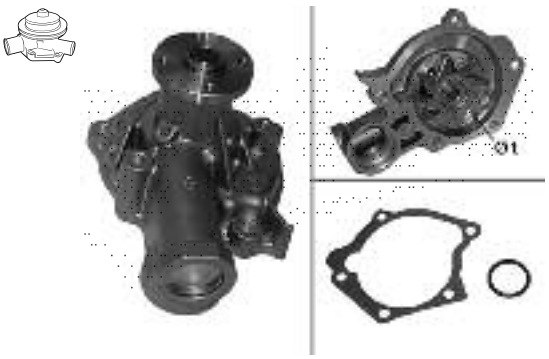

LAND ROVER STC637

Valeo 506828

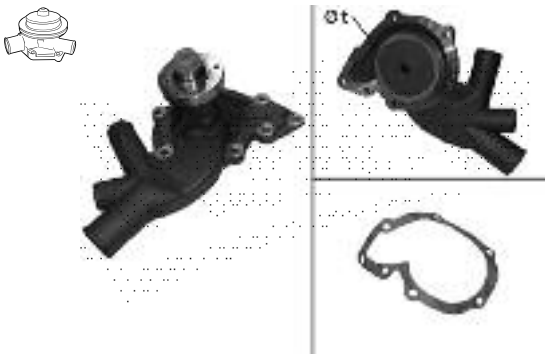

LAND ROVER RTC6332

Valeo 506829

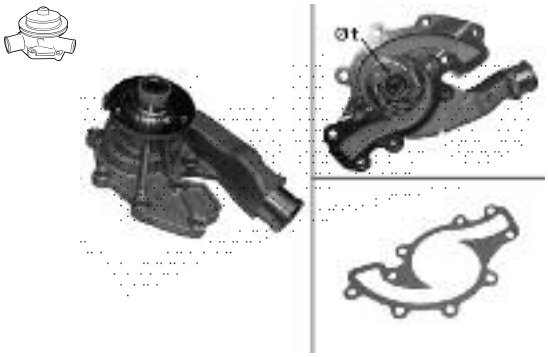

LAND ROVER STC4378

Valeo 506830

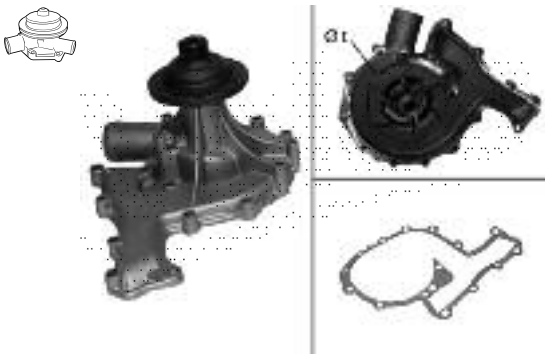

LAND ROVER RTC6339

Valeo 506831

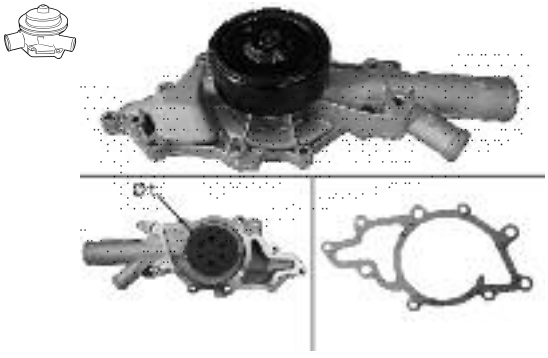

MERCEDES 6462000301

Valeo 506832

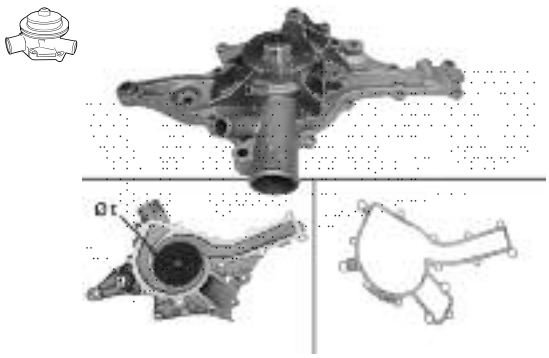

MERCEDES 1122001501

Valeo 506833

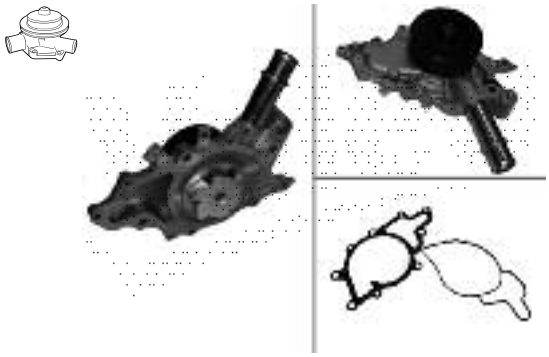

MERCEDES 6112001001

Valeo 506835

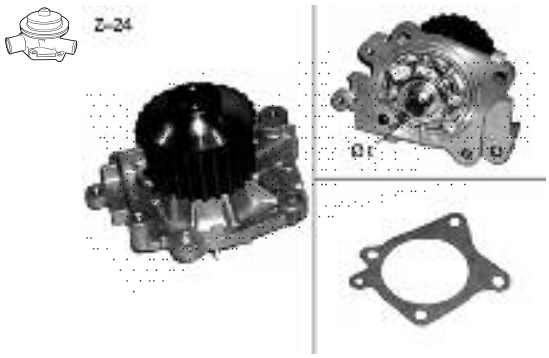

MITSUBISHI MD346790

Valeo 506836

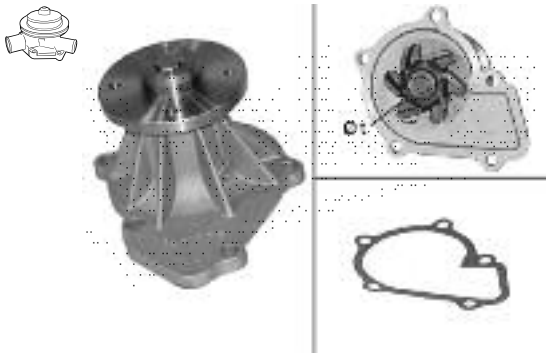

FORD 1962054

Valeo 506837

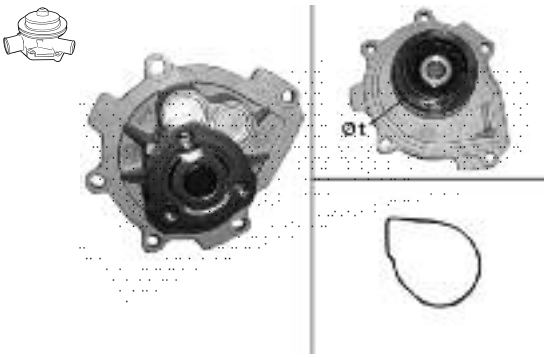

OPEL 1334142

Valeo 506838

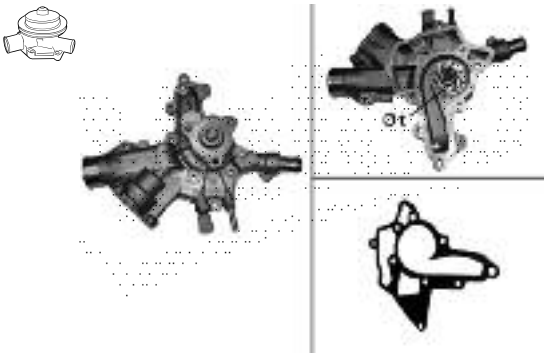

VAUXHALL 24469102

Valeo 506839

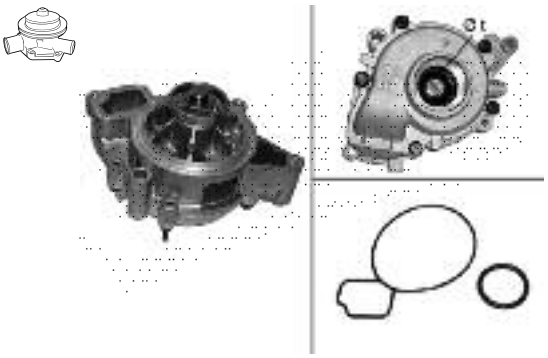

VAUXHALL 93181118

Valeo 506842

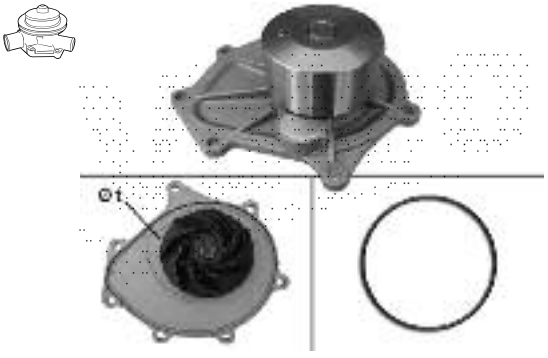

ROVER PEB102240

Valeo 506843

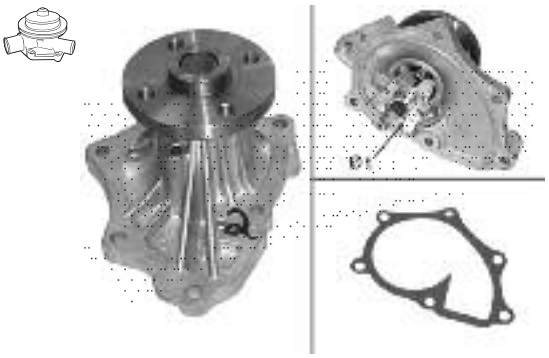

TOYOTA 1610028041

Valeo 506844

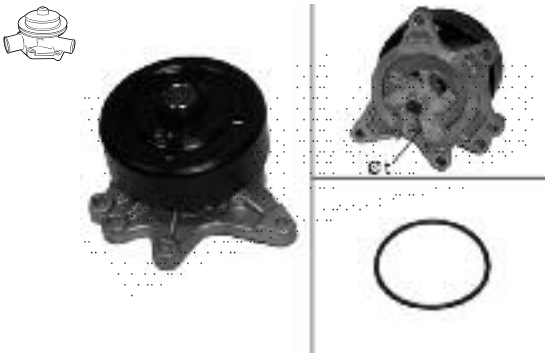

TOYOTA 1610029415

Valeo 506846

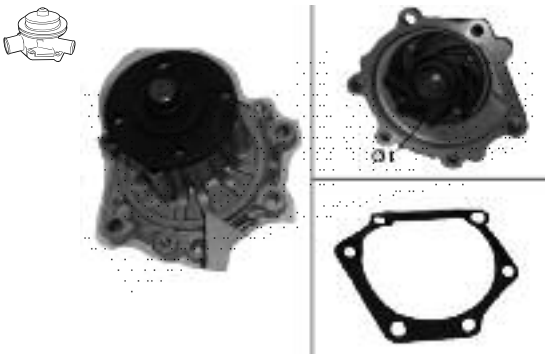

VOLKSWAGEN J1610059257

Valeo 506847

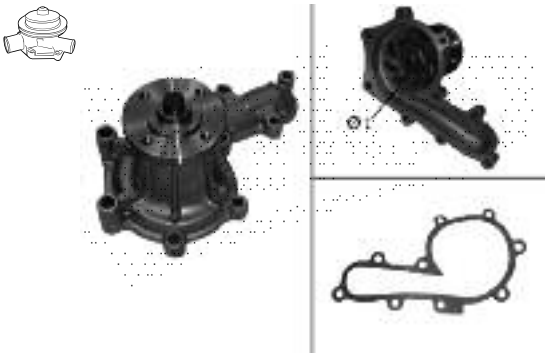

TOYOTA 1610019235

Valeo 506848

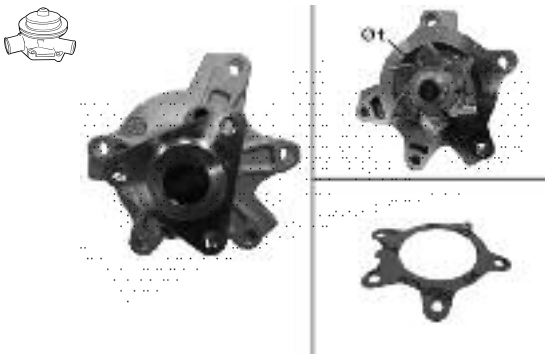

TOYOTA 1610029155

Valeo 506849

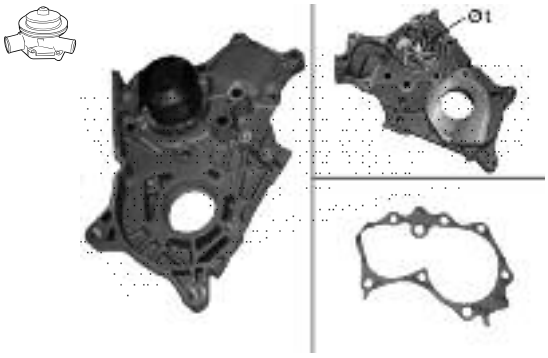

TOYOTA 1610029185

Valeo 506851

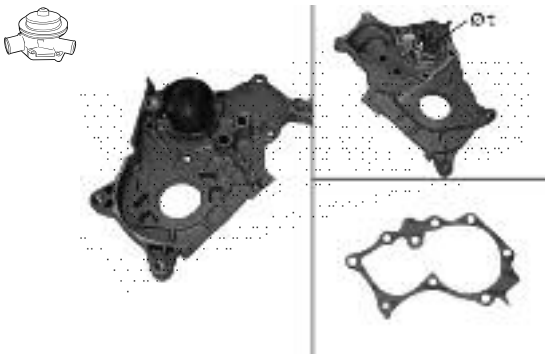

TOYOTA 1610029135

Valeo 506852

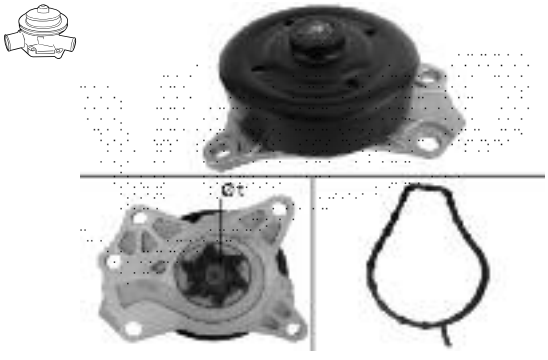

DAIHATSU 1610080003

Valeo 506853

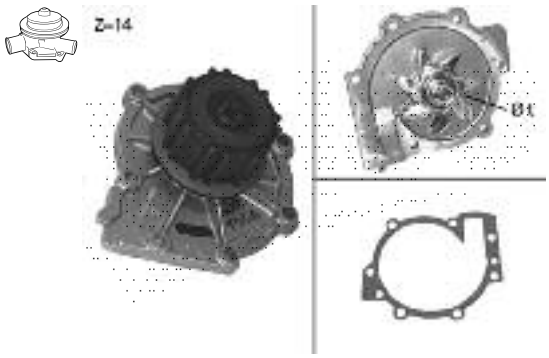

VOLVO 272334

Valeo 506854

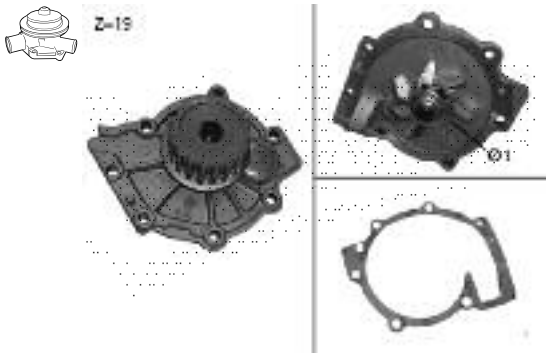

VOLVO 274216

Valeo 506855

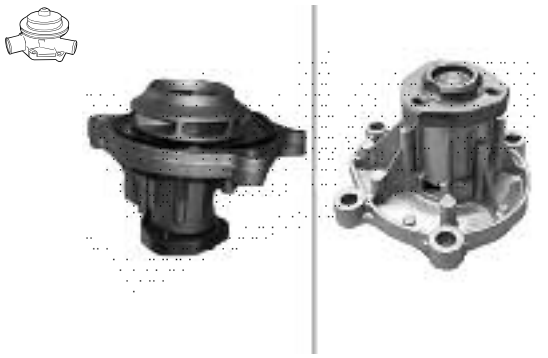

VOLKSWAGEN 03D121005

Valeo 506856

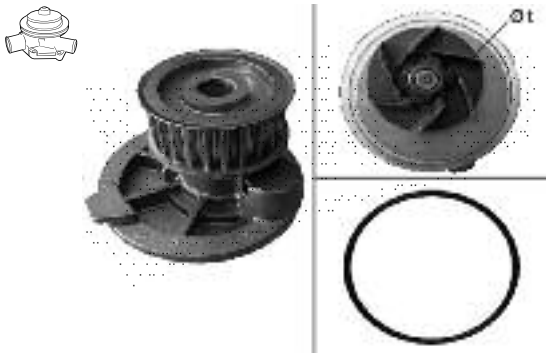

VAUXHALL 24409355

Valeo 506857

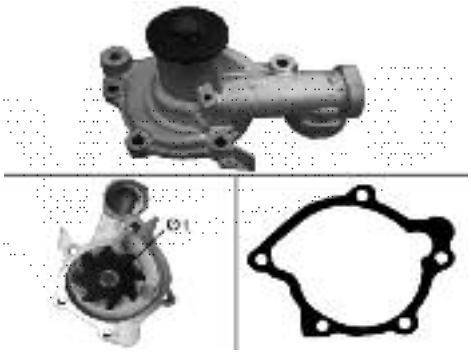

PROTON MD972054

Valeo 506858

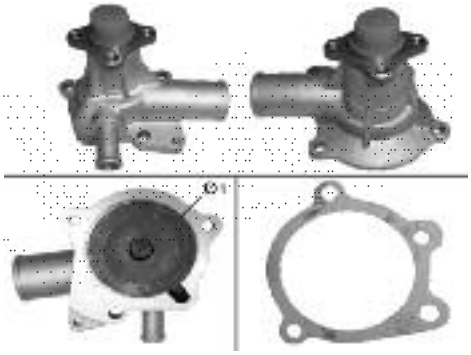

FORD 5013274

Valeo 506859

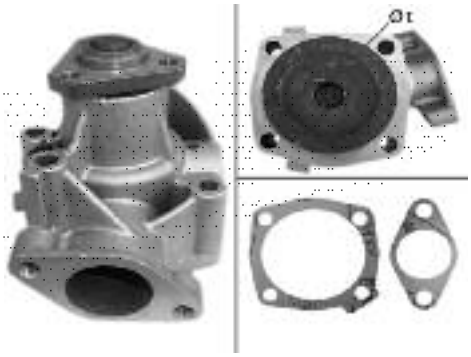

LANCIA 7783009

Valeo 506860

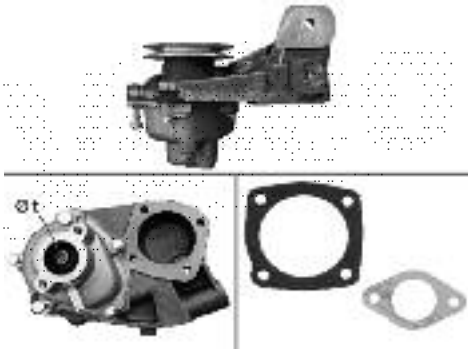

FIAT 5984047

Valeo 506862

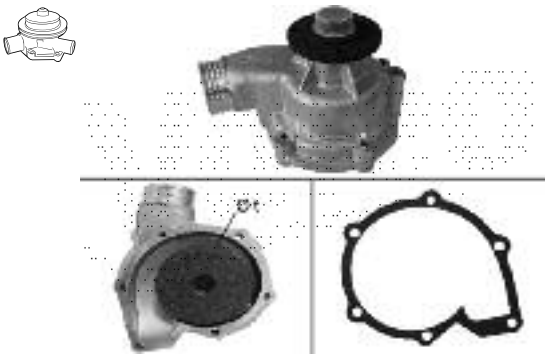

BMW 11511315563

Valeo 506863

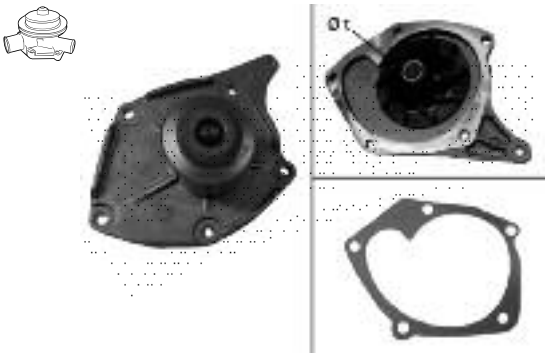

DACIA 7701478031

Valeo 506864

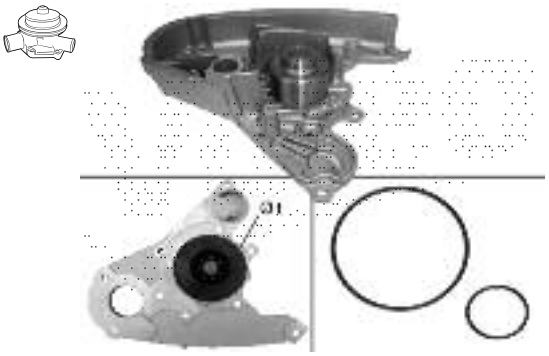

IVECO 504033770

Valeo 506865

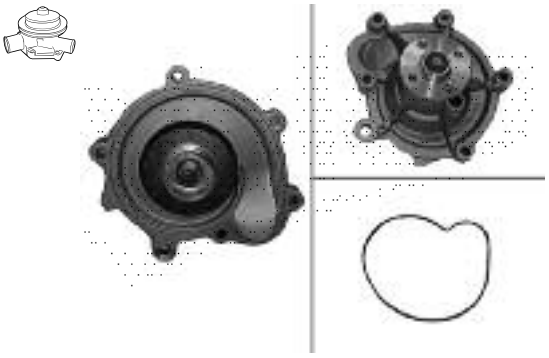

MERCEDES 2712000201

Valeo 506866

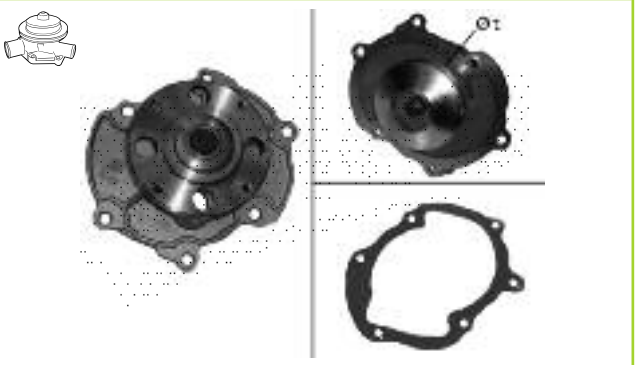

VAUXHALL 12566029

Valeo 506867

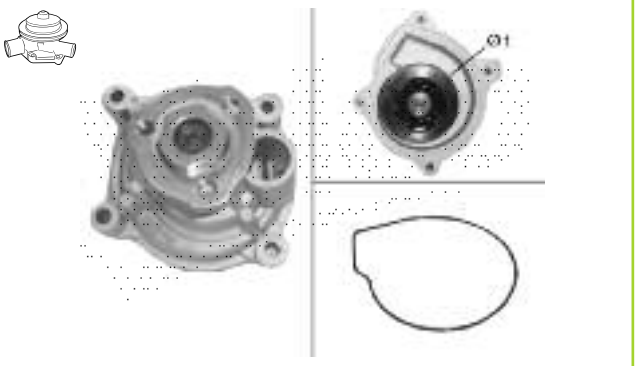

AUDI 03C121005SX

Valeo 506868

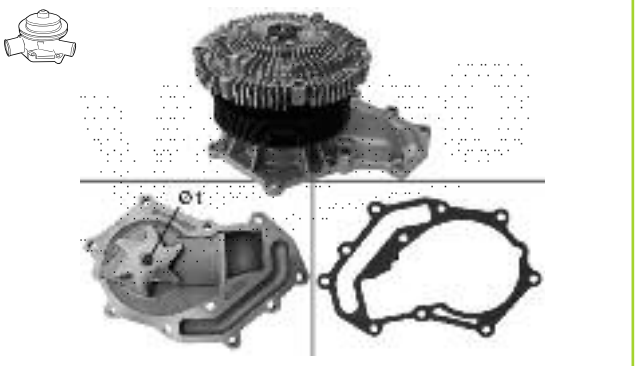

NISSAN 210102W227

Valeo 506869

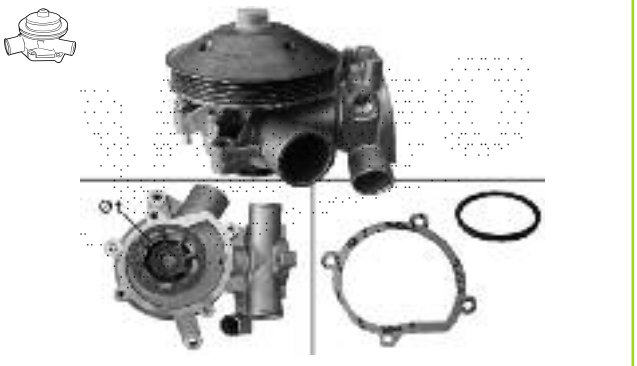

RENAULT 7701466262

Valeo 506870

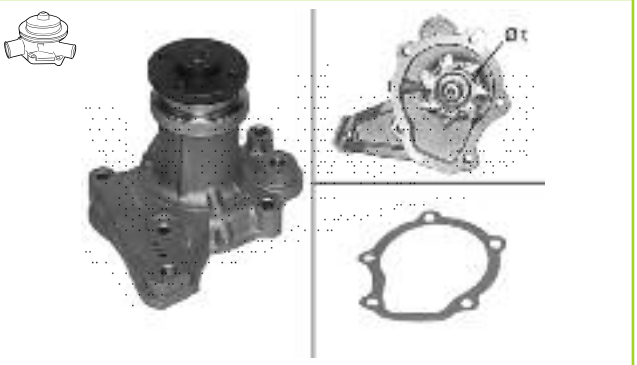

SANTANA 1740078101

Valeo 506871

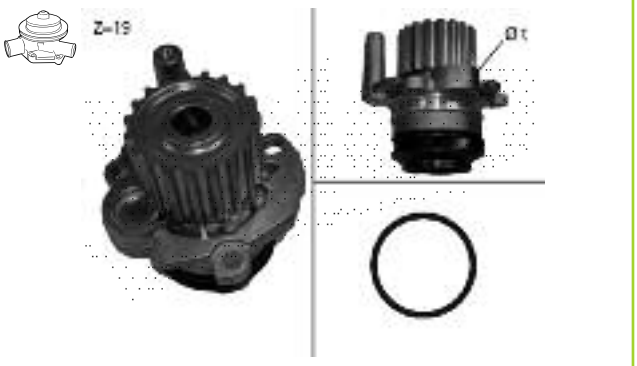

AUDI 038121011CX

Valeo 506872

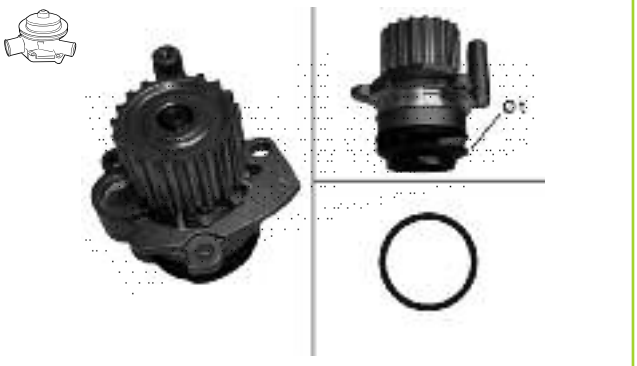

AUDI 038121011J

Valeo 506873

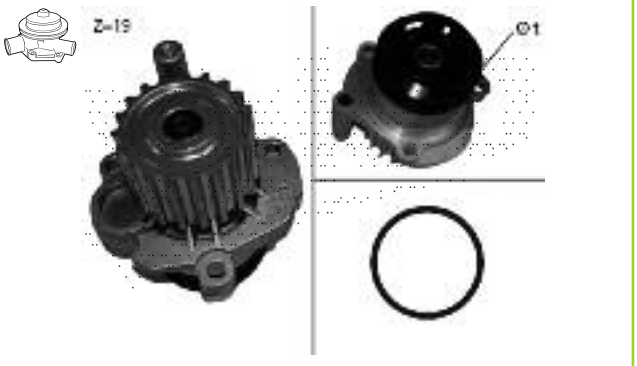

AUDI 045121011B

Valeo 506874

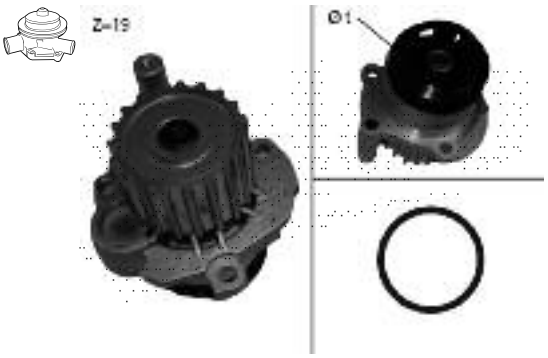

SEAT 045121011C

Valeo 506875

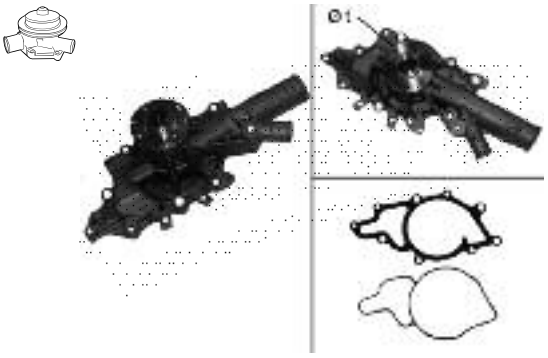

MERCEDES 6112001101

Valeo 506876

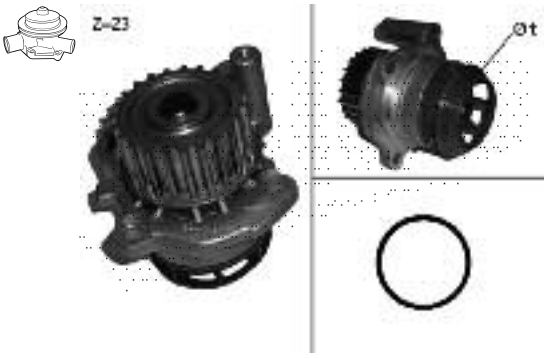

VOLKSWAGEN 06F121011X

Valeo 506877

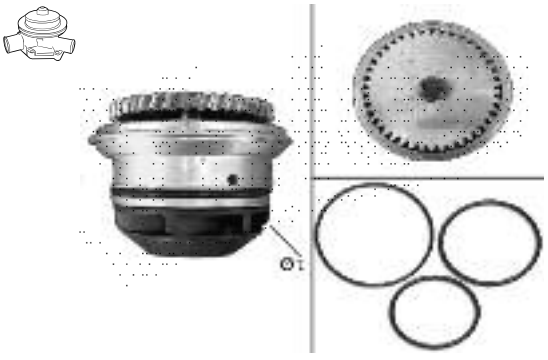

VOLKSWAGEN 062121010

Valeo 506878

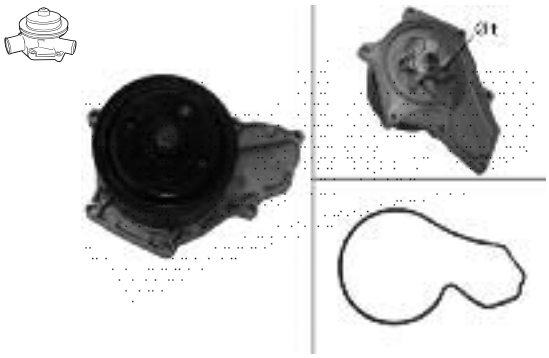

HONDA 19200RSRE02

Valeo 506879

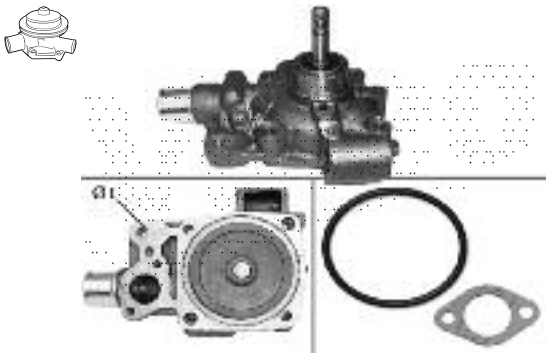

RENAULT VEHICULES INDUSTRIELS 5001853804

Valeo 506880

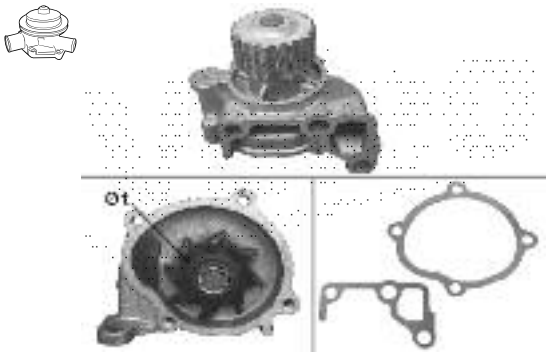

SUZUKI 1740078E00

Valeo 506881

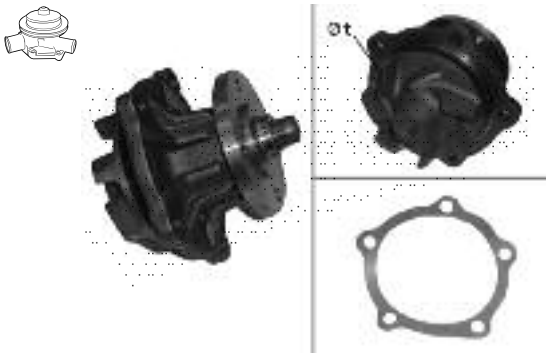

TOYOTA 1610069036

Valeo 506882

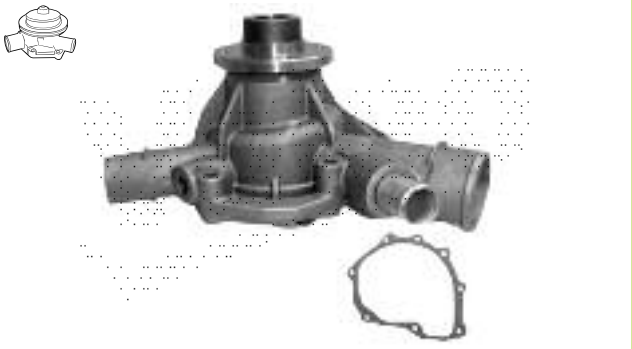

MERCEDES 1112004201

Valeo 506893

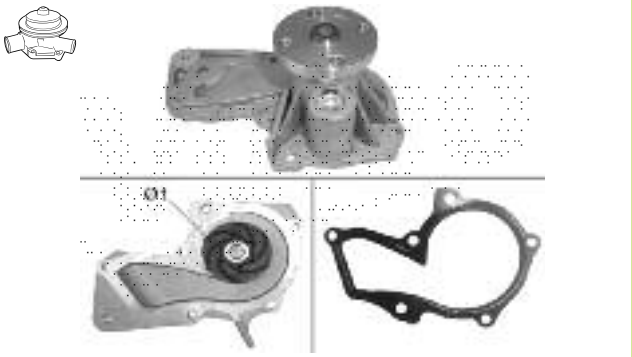

FORD 1406479

Valeo 506894

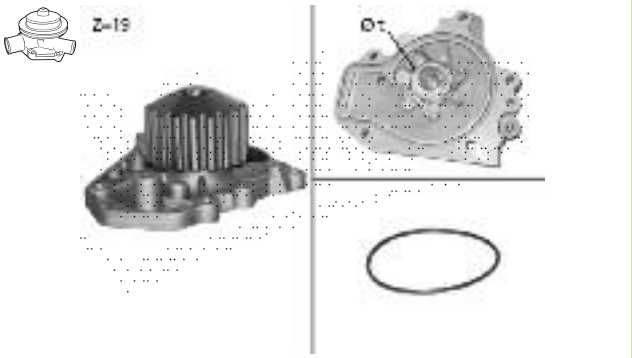

HONDA 19200P75003

Valeo 506895

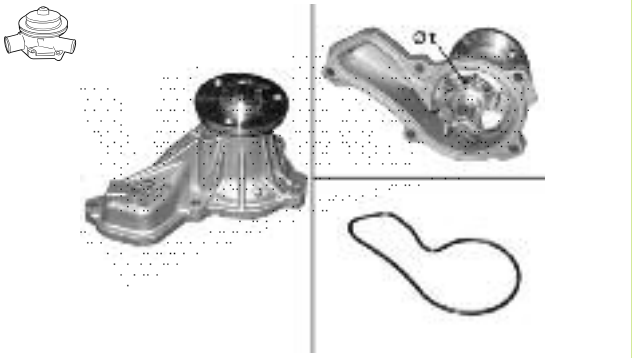

HONDA 19200RNAA01

Valeo 506897

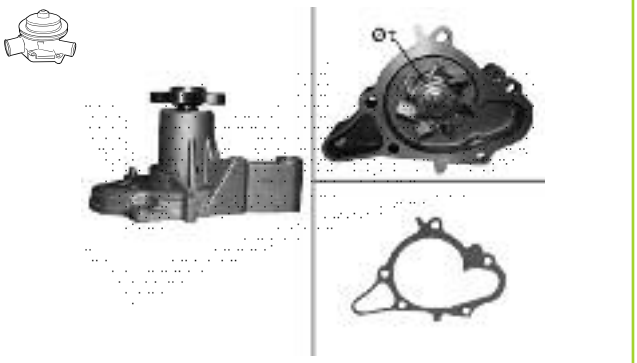

KIA 2510002566

Valeo 506898

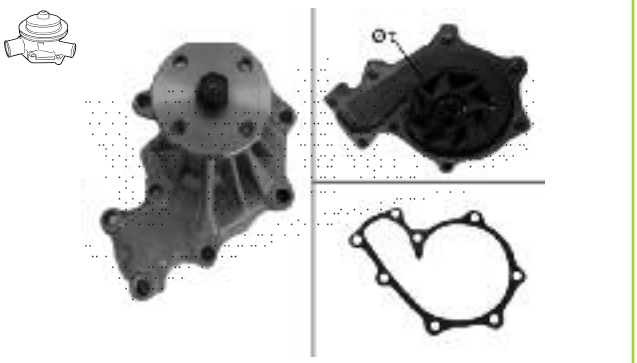

MAZDA 8ALA15100A

Valeo 506899

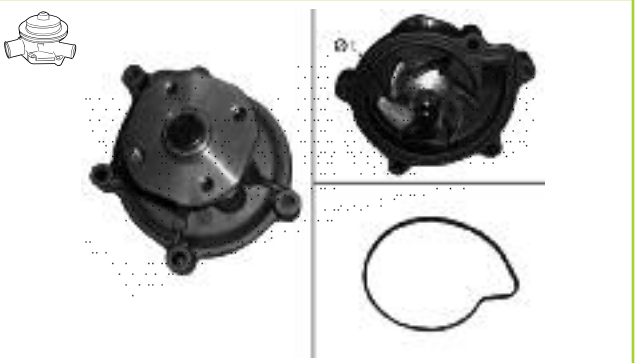

MERCEDES 6402000301

Valeo 506900

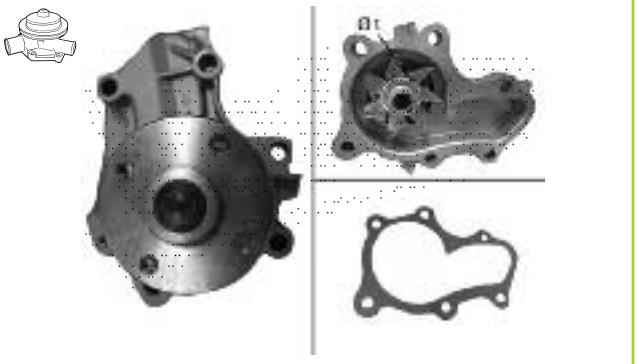

MITSUBISHI MD323372

Valeo 506902

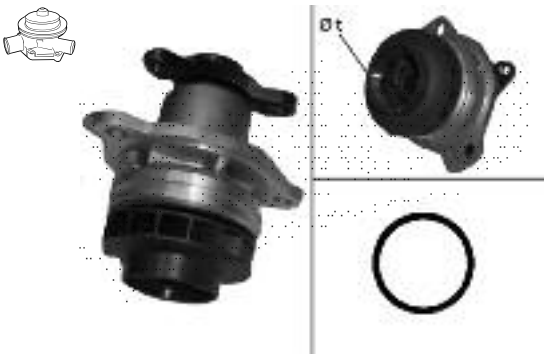

NISSAN 2101000Q0C

Valeo 506903

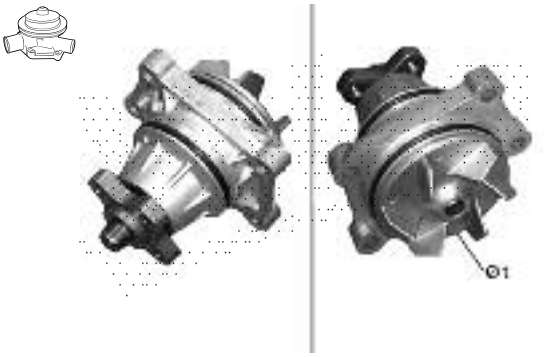

SUZUKI 1740085830

Valeo 506904

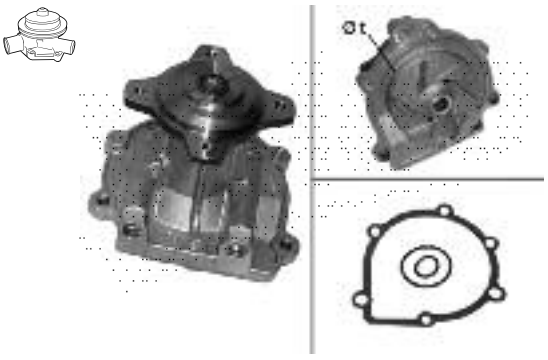

SUZUKI 1740077810

Valeo 506905

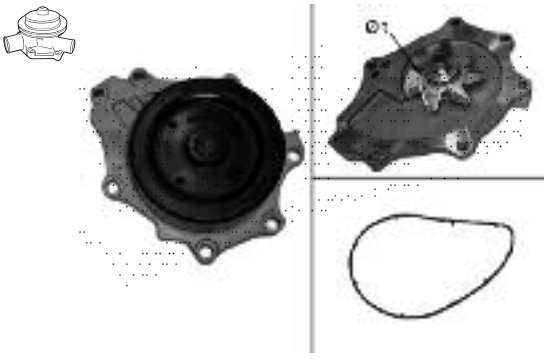

LEXUS 1610009340

Valeo 506906

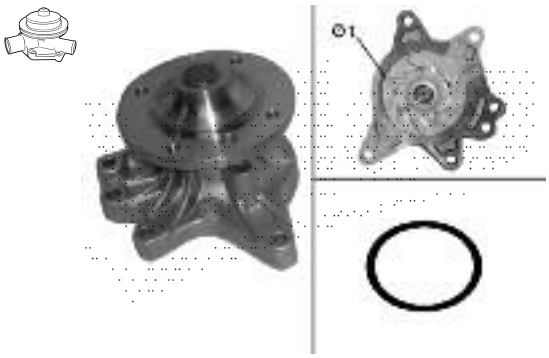

TOYOTA 1610029146

Valeo 506907

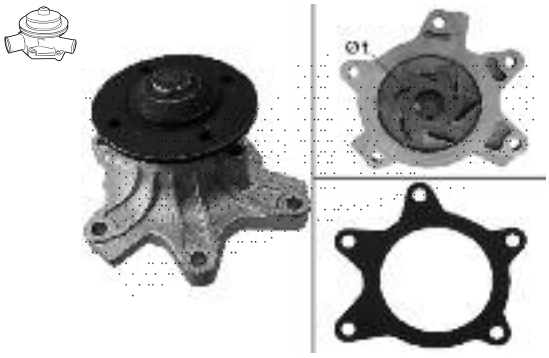

MINI 11517790871

Valeo 506908

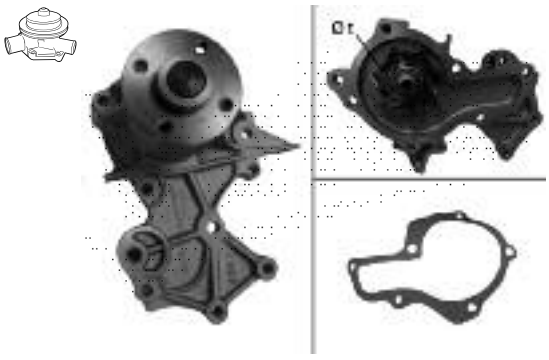

SUZUKI 1740061820

Valeo 506911

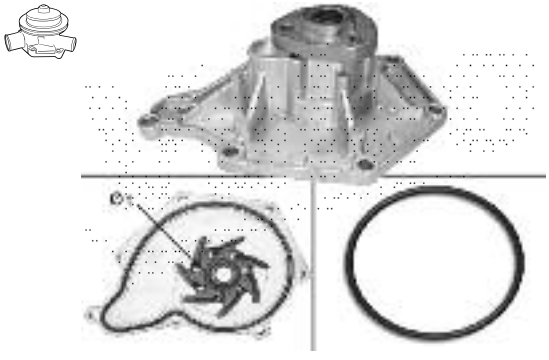

AUDI 06E121005F

Valeo 506913

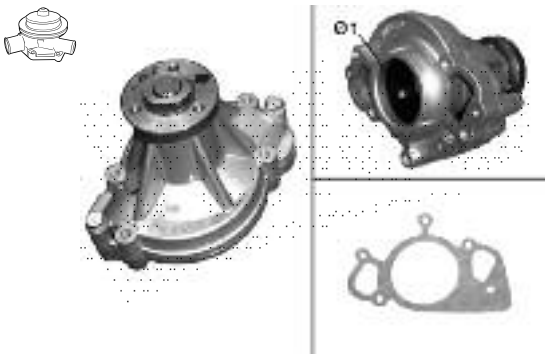

JAGUAR AJ88417

Valeo 506914

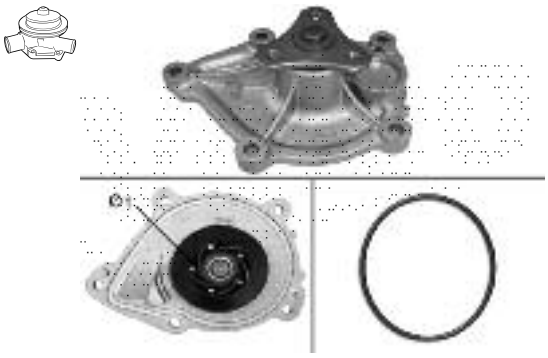

MINI 11517550484

Valeo 506916

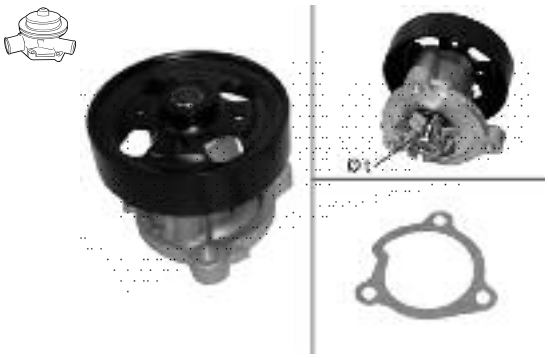

NISSAN 210106N225

Valeo 506918

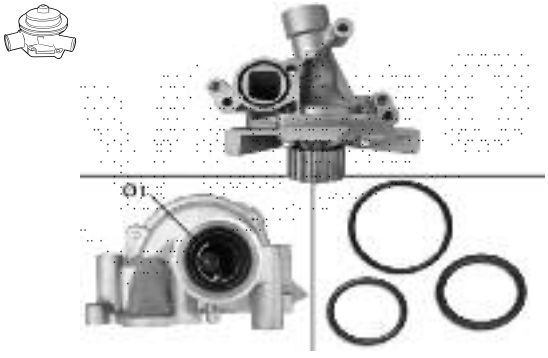

CITROËN 1201J1

Valeo 506919

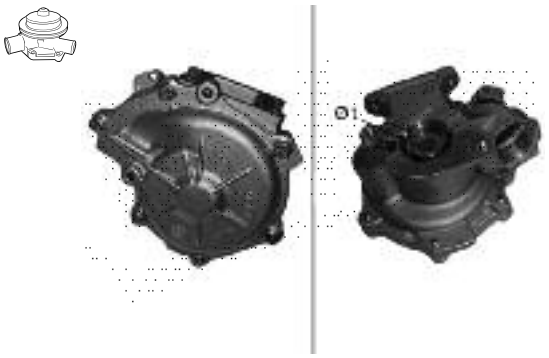

BMW 11517511221

Valeo 506920

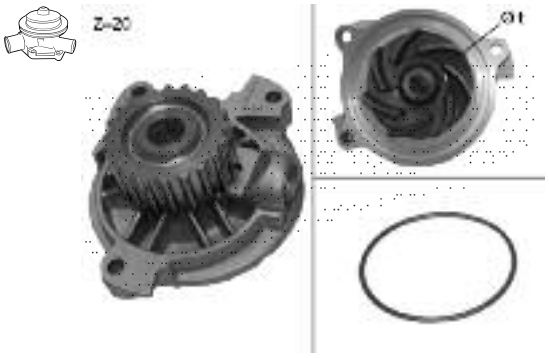

AUDI 074121005N

Valeo 506922

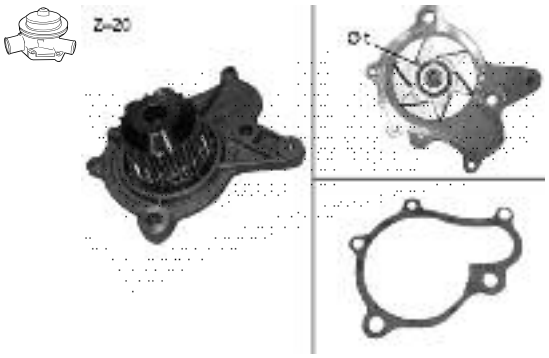

HYUNDAI 2510027400

Valeo 506923

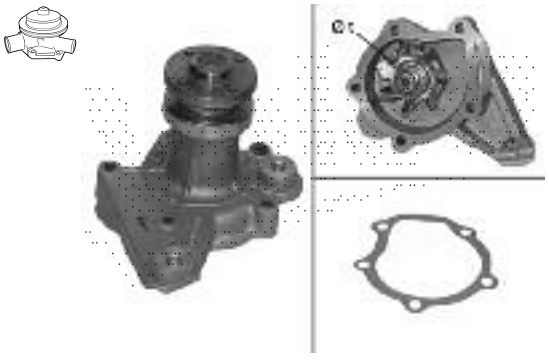

SANTANA 1740078101

Valeo 506924

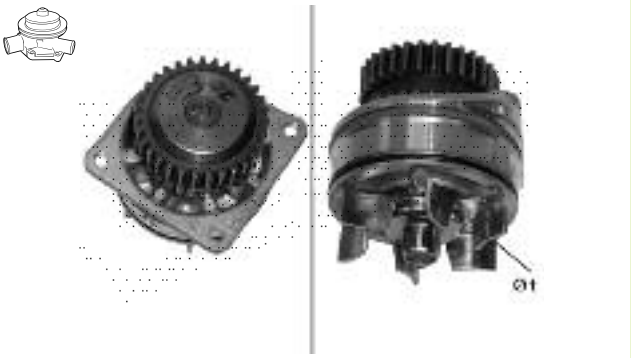

INFINITI B1010JK20A

Valeo 506925

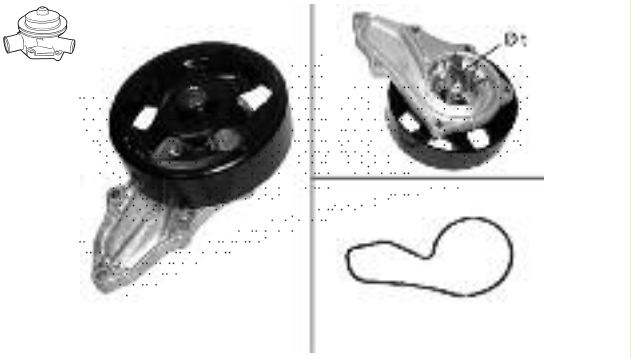

HONDA 19200RAAA01

Valeo 506926

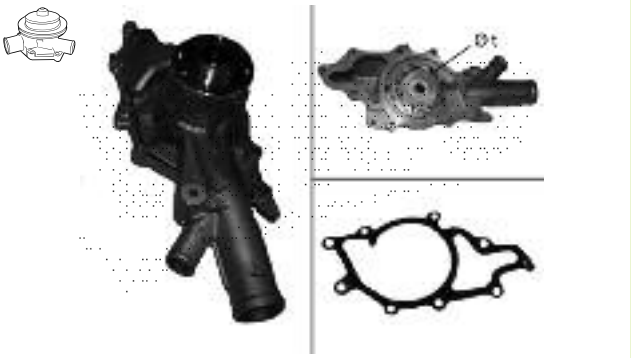

MERCEDES 6462001001

Valeo 506927

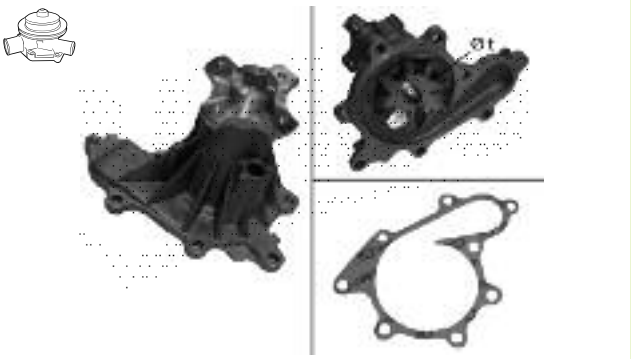

NISSAN 21010EB300

Valeo 506928

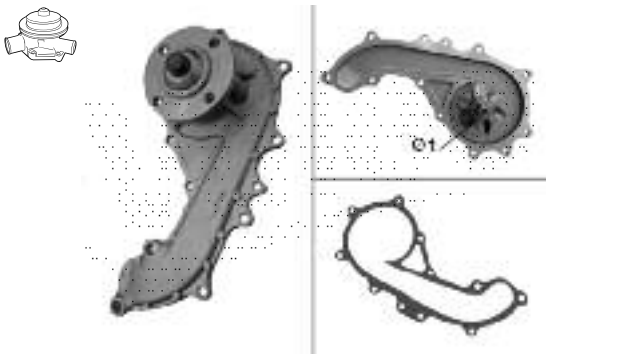

TOYOTA 1610079155

Valeo 506929

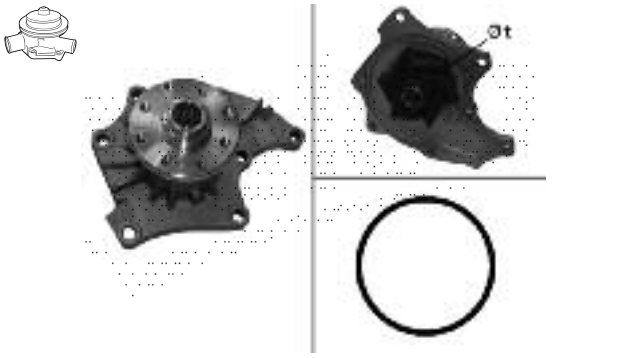

OPEL 1334113

Valeo 506930

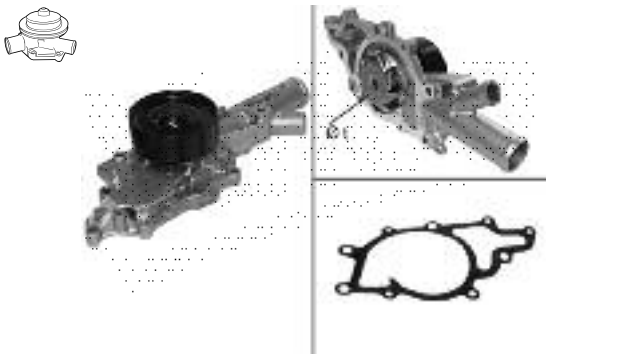

MERCEDES 6132000901

Valeo 506934

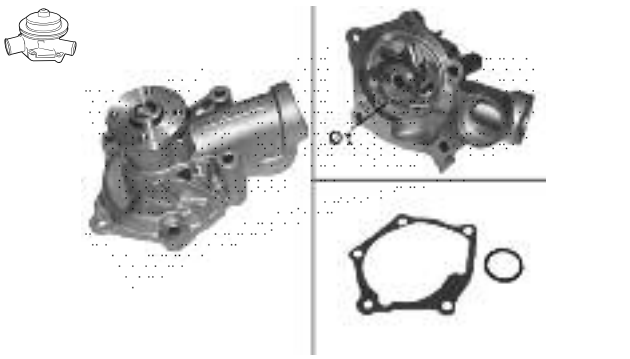

MITSUBISHI 1300A066

Valeo 506935

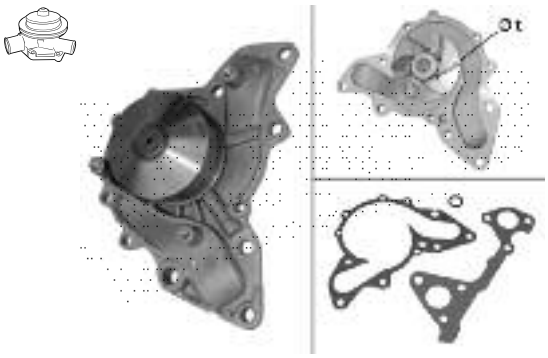

HYUNDAI 2510039802

Valeo 506936

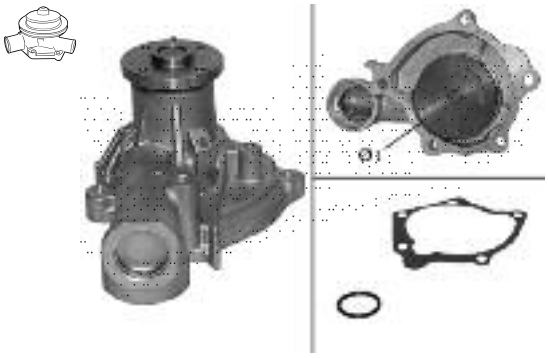

MITSUBISHI MD972050

Valeo 506938

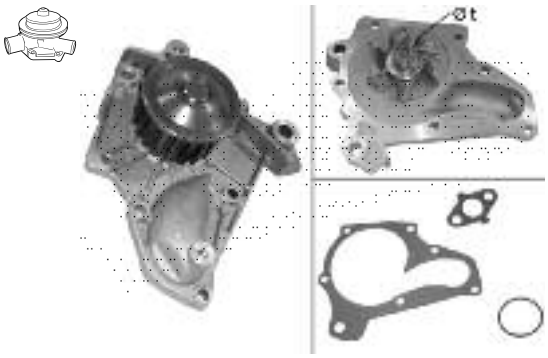

TOYOTA 1610069075

Valeo 506939

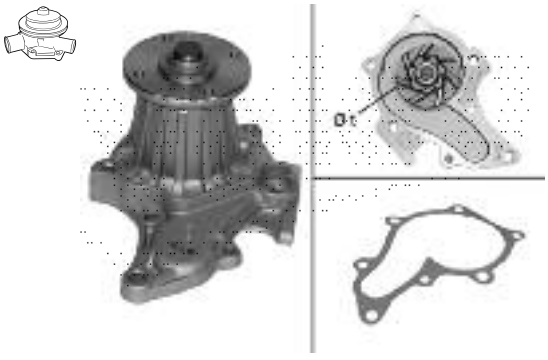

TOYOTA 1610019095

Valeo 506942

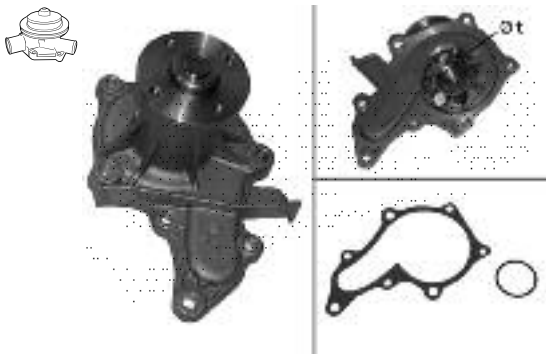

TOYOTA 1611019146

Valeo 506943

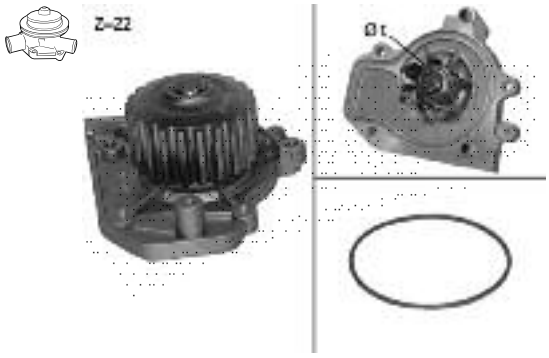

HONDA 19200PT003

Valeo 506946

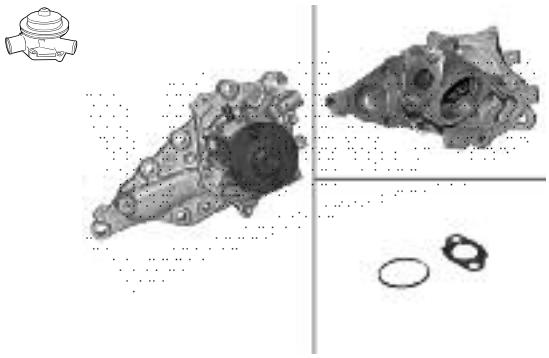

LEXUS 1611049155

Valeo 506948

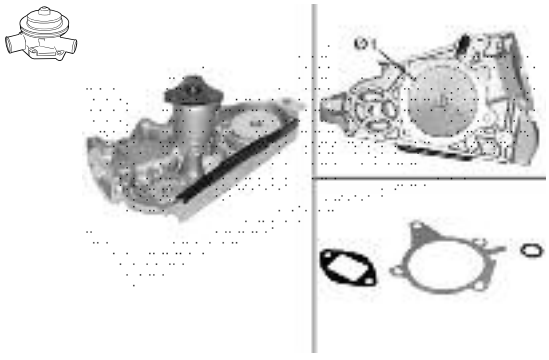

MAZDA 8AB8-15-010

Valeo 506950

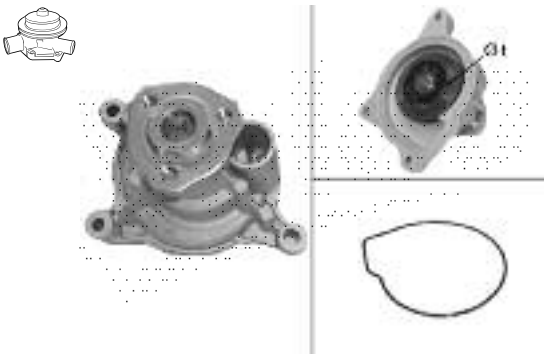

AUDI 03C121008B

Valeo 506952

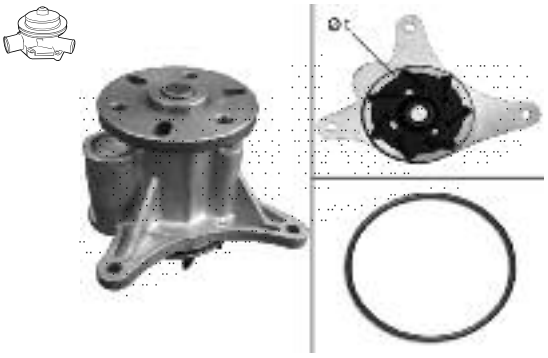

CITROËN 1201G6

Valeo 506953

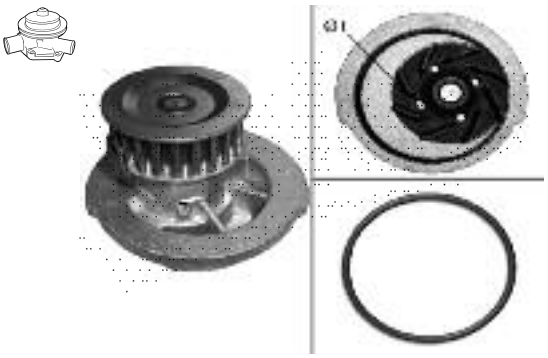

DAEWOO 96230587

Valeo 506954

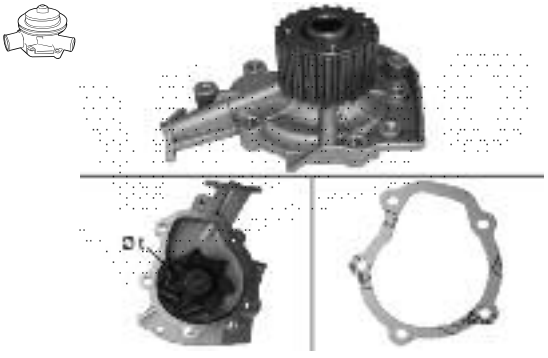

CHEVROLET 1740070D00

Valeo 506955

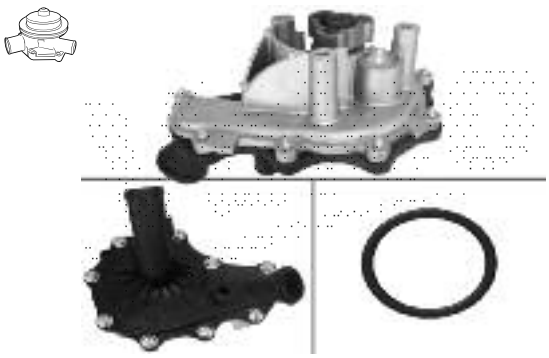

FORD 1381796

Valeo 506956

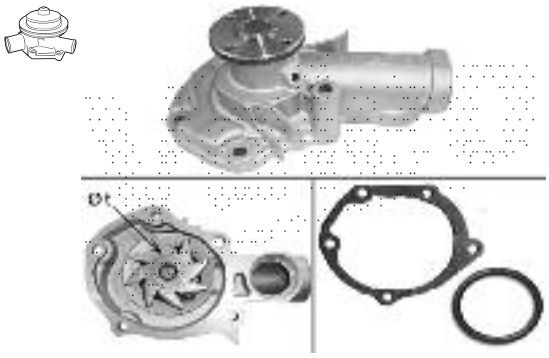

MITSUBISHI 1300A069

Valeo 506958

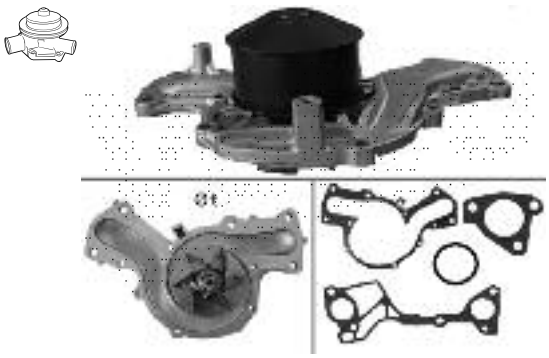

MITSUBISHI MD977503

Valeo 506961

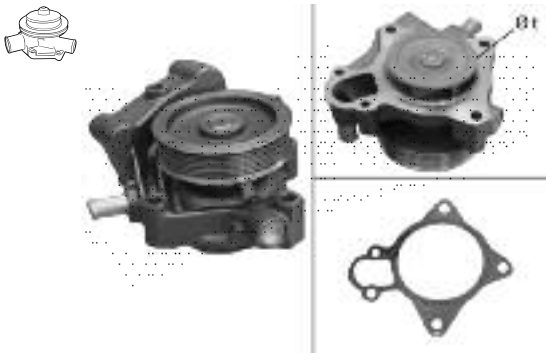

CITROËN 1201J4

Valeo 506962

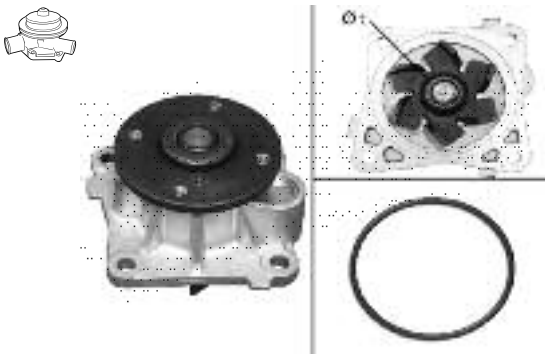

SMART 1352000001

Valeo 506968

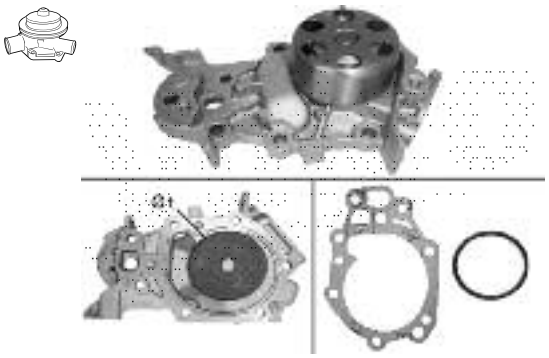

RENAULT 8200702750

Valeo 506964

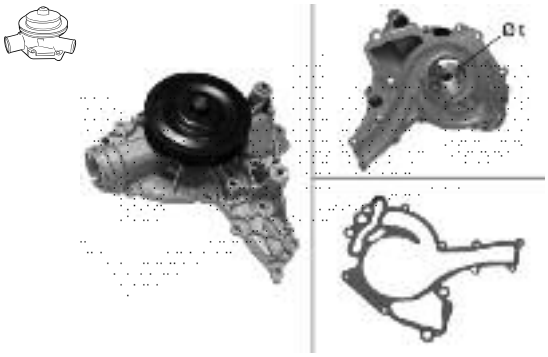

MERCEDES 2722000901

Valeo 506973

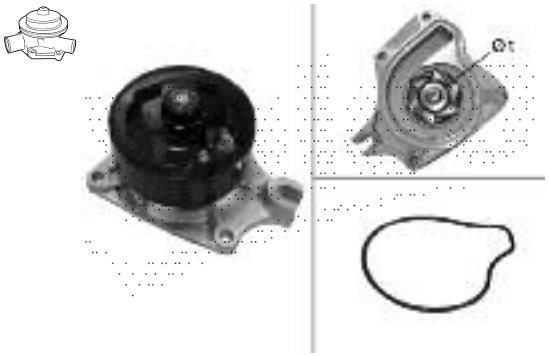

MAZDA ZJ0115010B

Valeo 506965

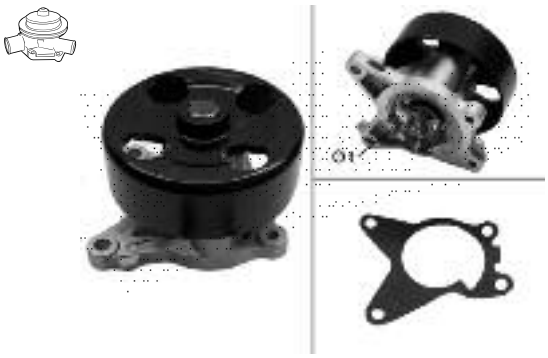

NISSAN B1010EN20B

Valeo 506974

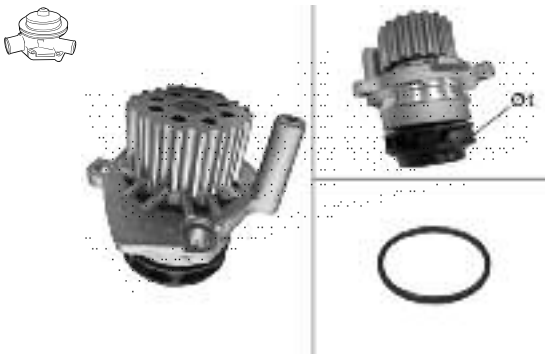

AUDI 03L121011X

Valeo 506967

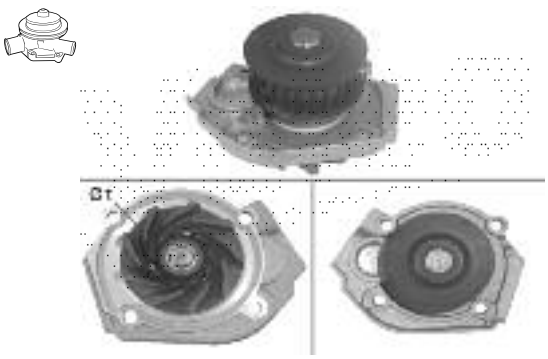

ABARTH 55204538

Valeo 506975

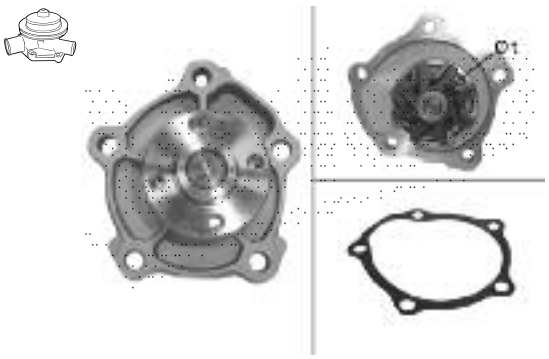

ALFA ROMEO 71737965

Valeo 506976

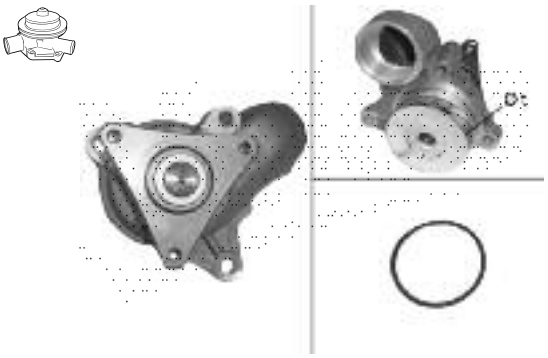

HYUNDAI 251002A000

Valeo 506977

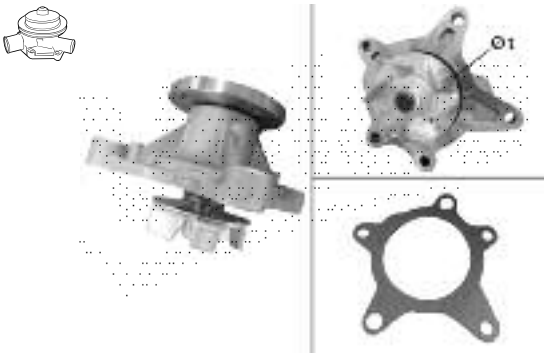

HYUNDAI 251002B000

Valeo 506978

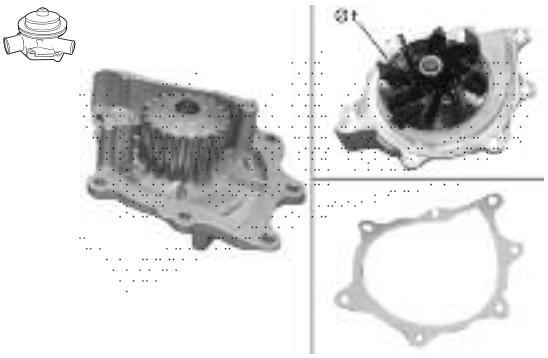

CITROËN 1201J6

Valeo 506979

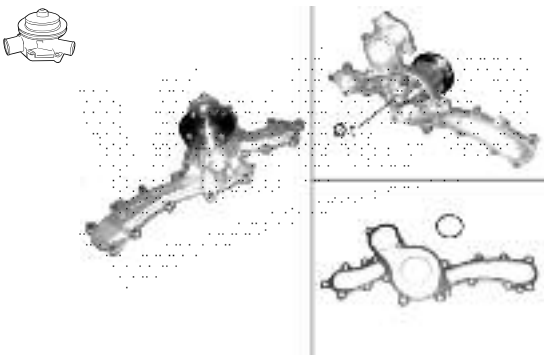

TOYOTA 1610009470

Valeo 506980

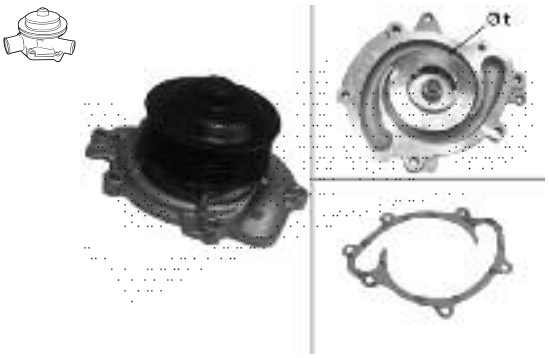

MERCEDES 6422000701

Valeo 506982

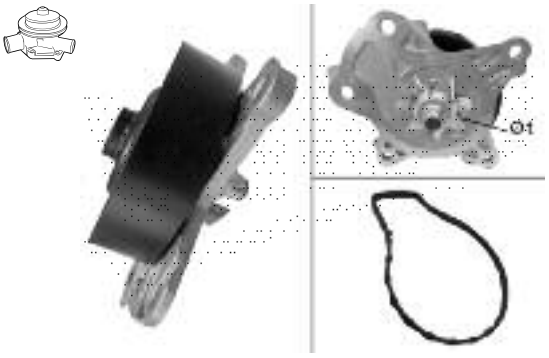

TOYOTA 1610039466

Valeo 506983

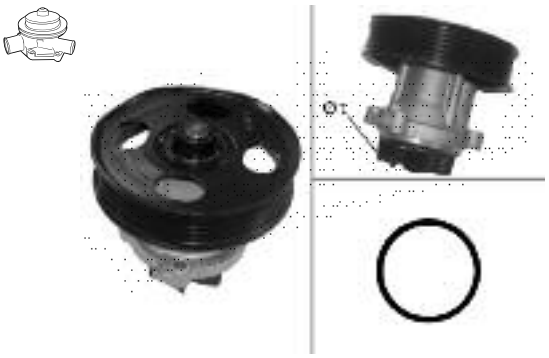

ALFA ROMEO 46815125

Valeo 506987

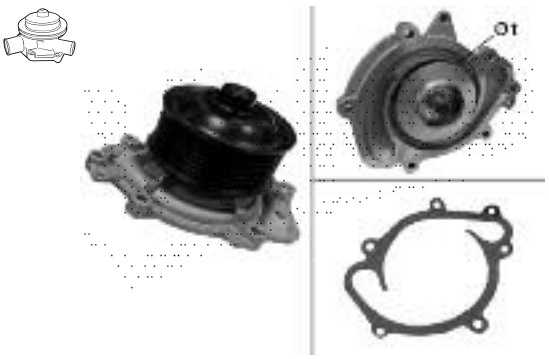

MERCEDES 6422001001

Valeo 506988

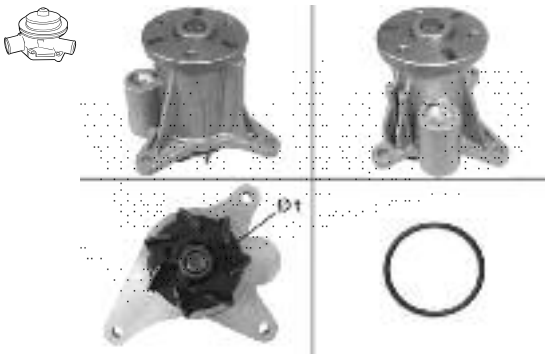

LAND ROVER — LR005764

Valeo 506993

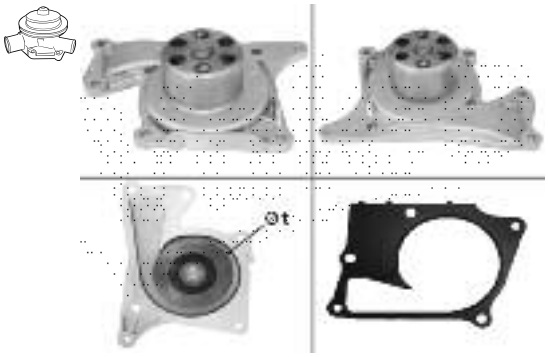

DACIA — 7701478830

Valeo 526001

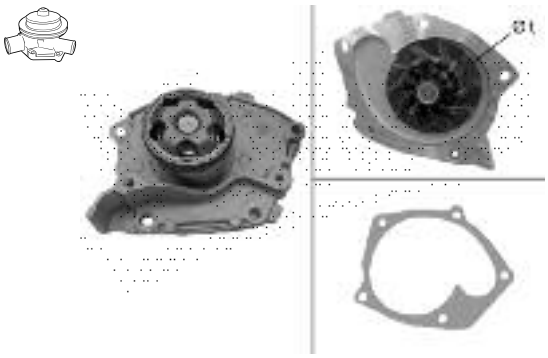

RENAULT — 7701479114

Valeo 526005

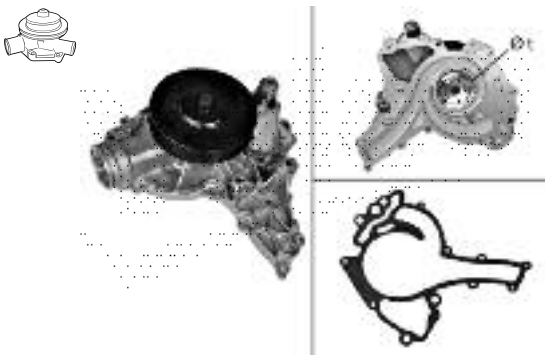

MERCEDES — 2722000401

Valeo 526006

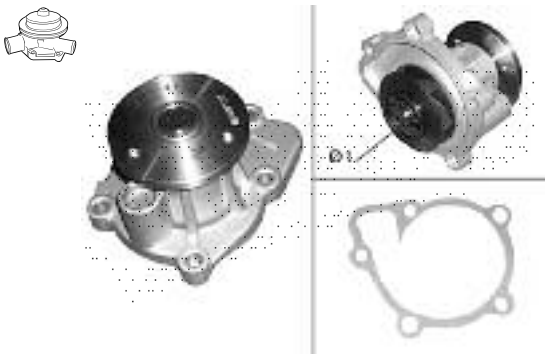

CITROËN — 1201K4

Valeo 526010

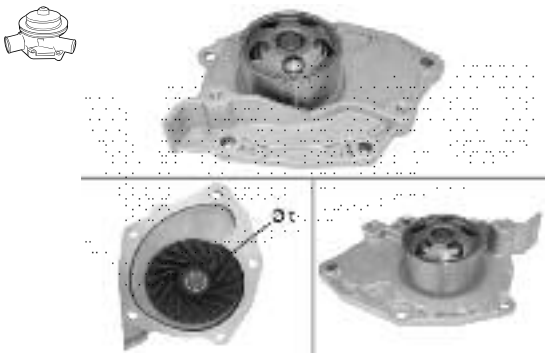

RENAULT — 7701478846

Valeo 700000

mm19 COD. 14X1.25

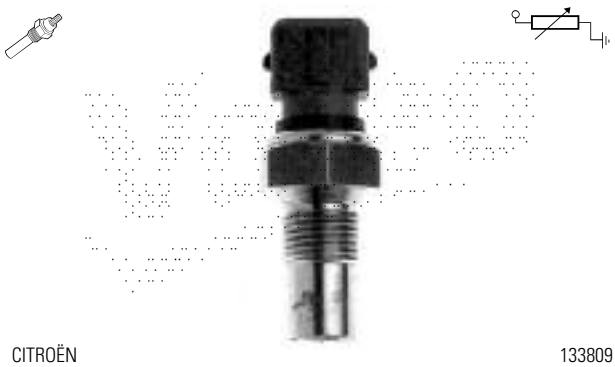

CITROËN	133809
FIAT	9601842680
PEUGEOT	133809

Valeo 700001

mm17 COD. 14X1.25

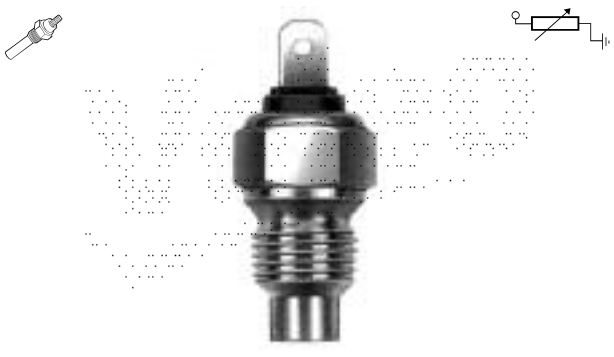

CITROËN	133772
PEUGEOT	133772

Valeo 700002

mm19 | COD. 16.5X1

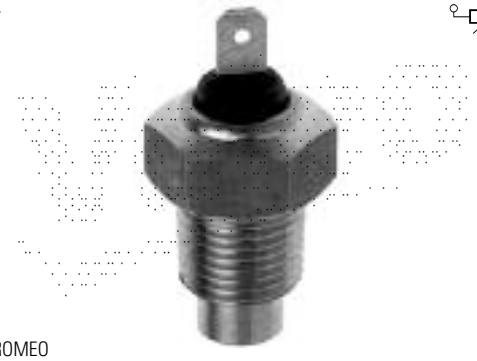

ALFA ROMEO	60813687
FIAT	7588802
IVECO	4448131

Valeo 700003

mm13 | COD. 1/8X27 NPTF

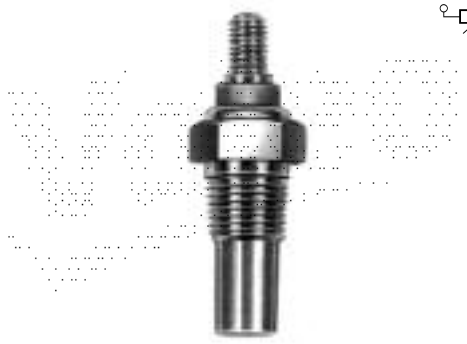

FORD	6058836

Valeo 700004

mm13 | COD. 1/8X27 NPTF

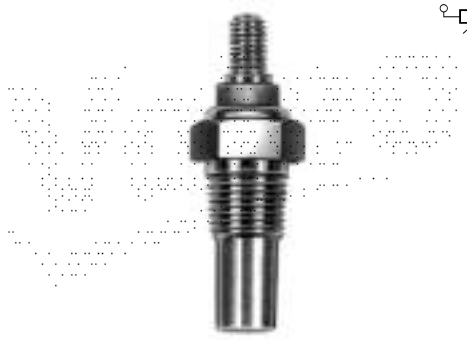

FORD	6146864

Valeo 700005

mm13 | COD. 1/8X27 NPTF

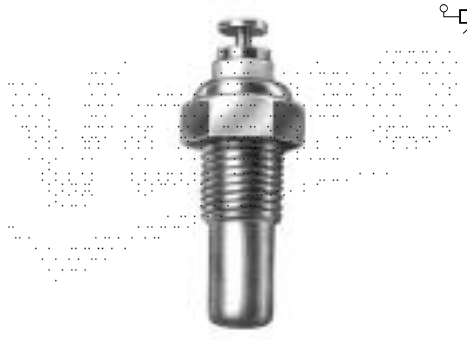

OPEL	1342561
SAAB	3439088
VAUXHALL	90510850

Valeo 700006

mm17 | COD. 16X1.5

VOLKSWAGEN	J8342020020

Valeo 700007

mm19 | COD. 14X1.5

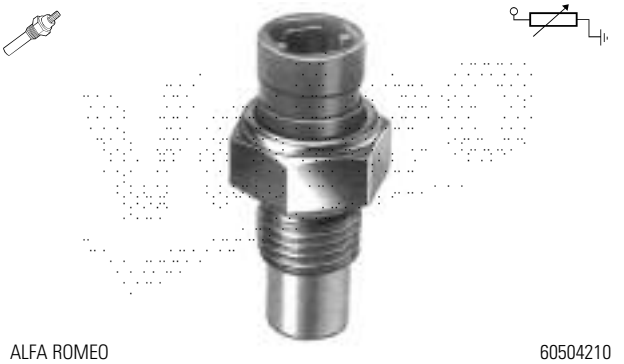

ALFA ROMEO	60504210
FIAT	7588856
LANCIA	7588856

Valeo 700008

mm19 | COD. 14X1.25

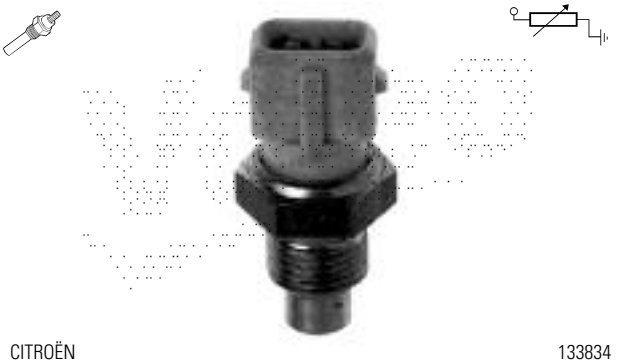

CITROËN	133834
FIAT	9616455480
PEUGEOT	133834

Valeo 700009

mm19 | COD. 14X1.25

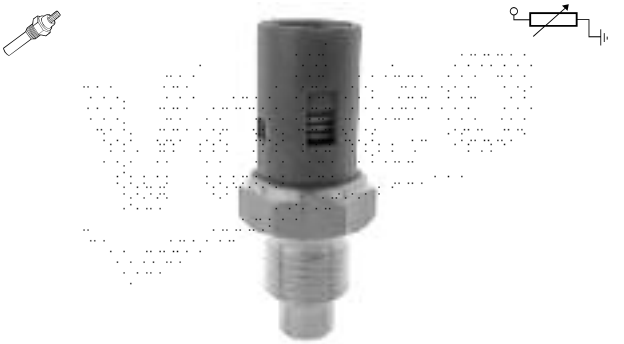

RENAULT	7700809909

700010

mm19 COD. 16X1.5

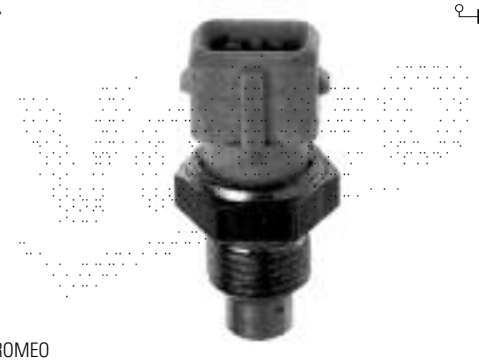

ALFA ROMEO	7735919
FIAT	7735919
LANCIA	7735919

700011

AUDI	025906041A
SEAT	025906041A
VOLKSWAGEN	025906041A

700012

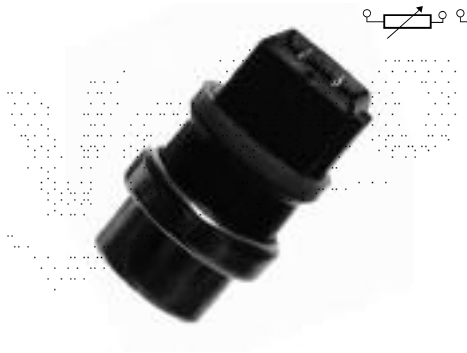

SEAT	6U0919501B
VOLKSWAGEN	357919501A

700013

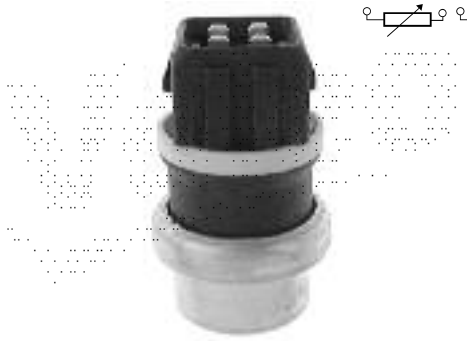

SEAT	357919501
SKODA	357919501
VOLKSWAGEN	357919501

700014

mm19 COD. 12X1.5

CITROËN	1920C4
PEUGEOT	1920C4

700015

mm19 COD. 12X1.5

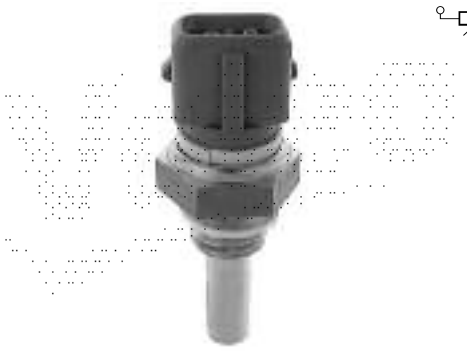

CITROËN	1920K9
FIAT	9613147080
PEUGEOT	1920K9

700016

mm19 COD. 12X1.5

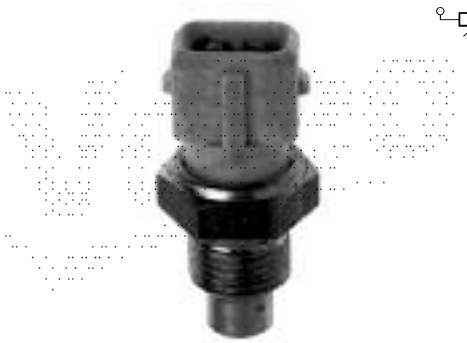

OPEL	4401810
RENAULT	7700737571
VAUXHALL	9109810

700017

mm19 COD. 14X1.25

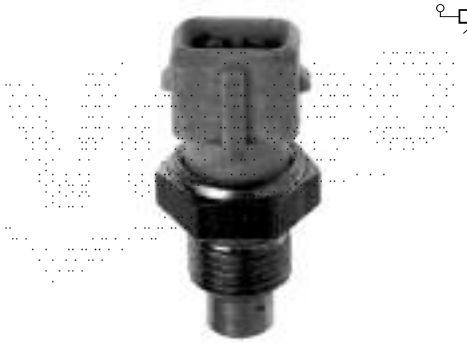

CITROËN	133878
FIAT	9618572580
PEUGEOT	133878

700018

mm19 COD. 12X1.5

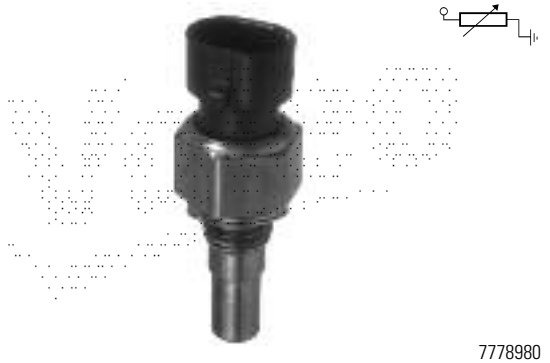

FIAT	7778980
OPEL	1338477
VAUXHALL	15326388

700019

mm19 COD. 12X1.5

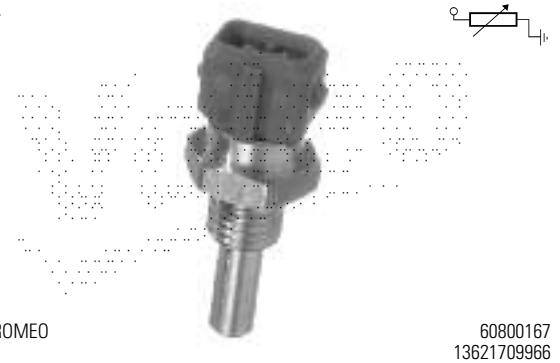

ALFA ROMEO	60800167
BMW	13621709966
PEUGEOT	024246
SEAT	025906041

700020

mm19 COD. 3/8X18 NPT

OPEL	6238236
VAUXHALL	15326386

700021

mm19 COD. 12X1.5

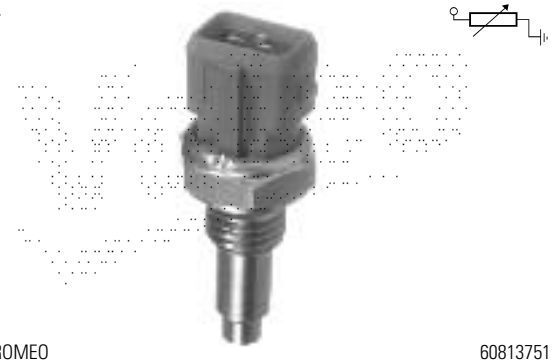

ALFA ROMEO	60813751
FIAT	46477022
PEUGEOT	1338A5

700022

mm19 COD. 12X1.5

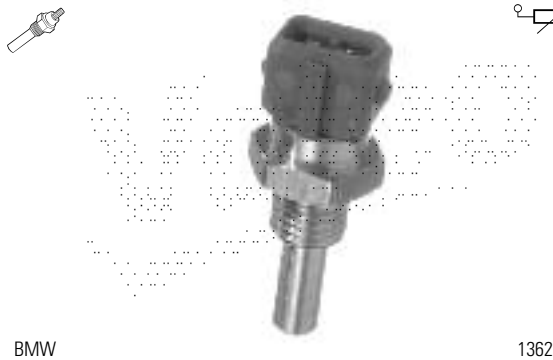

BMW	13622242184
FIAT	7738223
OPEL	1342852

700023

mm19 COD. 12X1.5

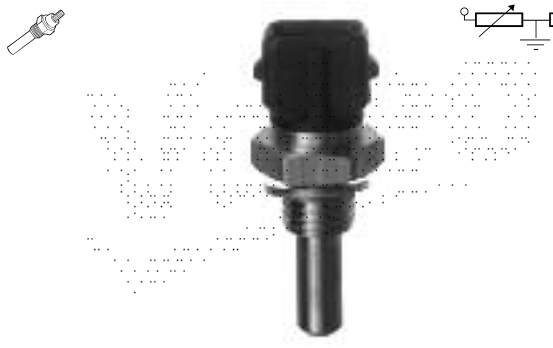

ALFA ROMEO	7647004
OPEL	1338457

700024

mm19 COD. 12X1.5

FIAT	46414596
LANCIA	46414596

700025

AUDI	058919501A

Valeo 700026

mm19 COD. 12X1.5

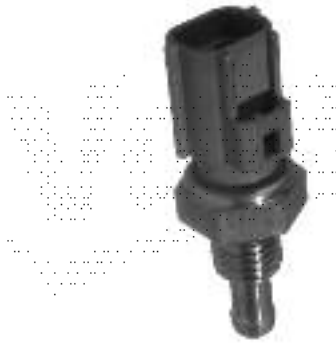

FORD	4537712

Valeo 700027

mm19 COD. 12X1.5

ALFA ROMEO	60812439
FIAT	7663320

Valeo 700028

mm19 COD. 12X1.5

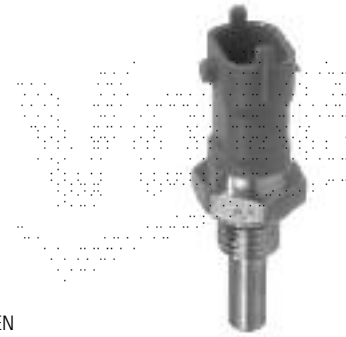

CITROËN	1338C7
FIAT	46472179
OPEL	6238179
PEUGEOT	1338F9

Valeo 700033

mm19 COD. 14X1.25

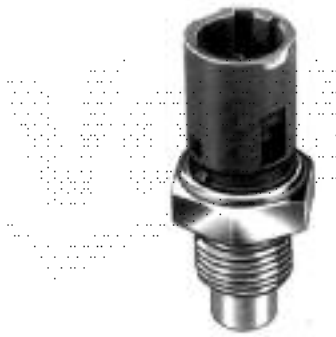

RENAULT	7700771821

Valeo 700034

COD. 1/8X27 NPTF

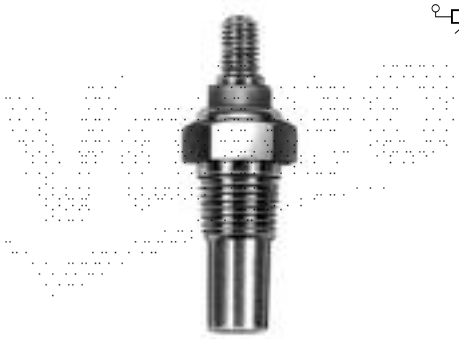

FORD	6145143

Valeo 700036

AUDI	251919501D
SEAT	251919501D
VOLKSWAGEN	251919501D

Valeo 700037

mm19 COD. 10x1.0

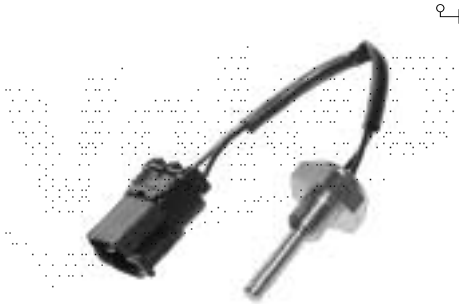

RENAULT	7439186486
VOLVO	9186486

Valeo 700038

mm19 COD. 10X1

AUDI	026906161
SEAT	026906161
VOLKSWAGEN	026906161

Valeo 700039

mm19 COD. 14X1.25

CITROËN	024261
PEUGEOT	024261

Valeo 700041

mm19 COD. 14X1.25

FIAT	7548005
FIAT	7588883

Valeo 700042

mm13 COD. 12X1.25

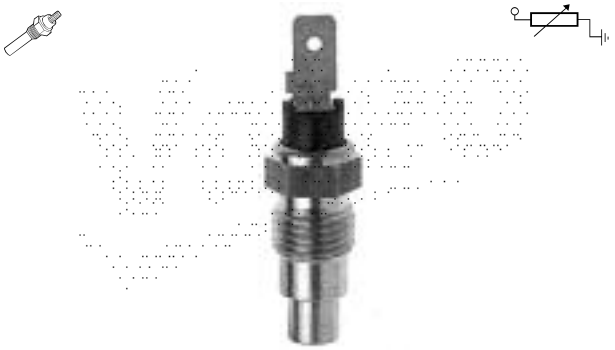

NISSAN	250809F900

Valeo 700043

mm13 COD. 1/8 GAS

OPEL	1338507
VAUXHALL	94247437

Valeo 700044

COD. 16x1.5

VOLKSWAGEN	251919501

Valeo 700046

COD. 1/8"x27 NPT

FORD	1657685

Valeo 700050

mm19 COD. 14X1.5

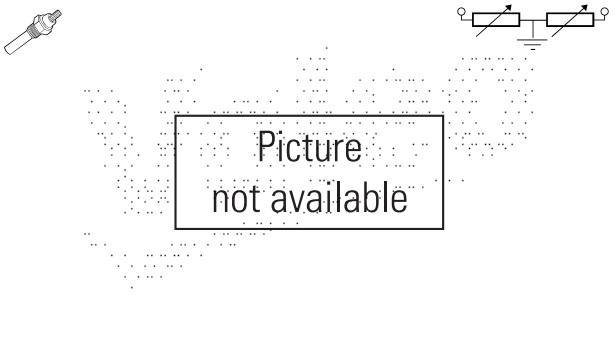

MERCEDES	0085425617
VOLKSWAGEN	062919501

Valeo 700054

COD. 12x1.5

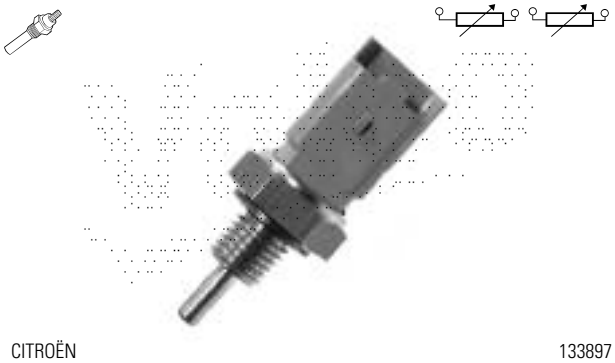

CITROËN	133897
FIAT	9631000880
PEUGEOT	1338A6

Valeo 700055

COD. 20

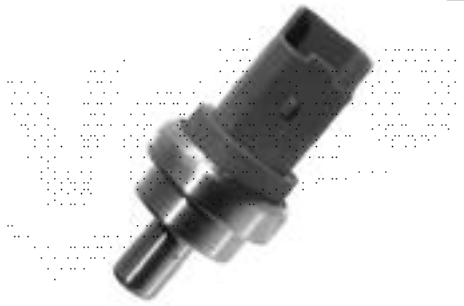

CITROËN	1338C1
LANCIA	9632562080
PEUGEOT	1338C1

Valeo 700056

COD. 14x1.25

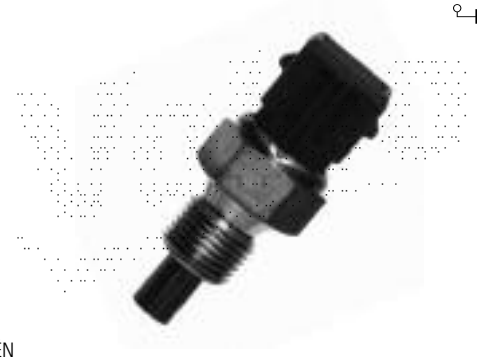

CITROËN	133855
FIAT	9621000680
PEUGEOT	133855

Valeo 700057

COD. 20

RENAULT	7700829427

Valeo 700059

COD. 1/8"x27 NPT

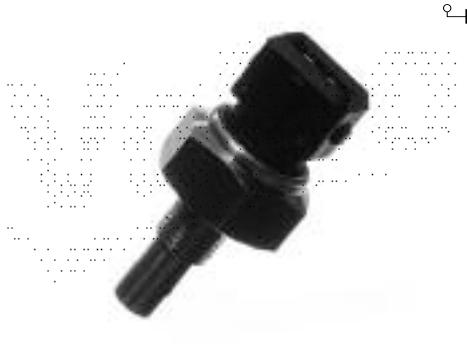

FORD	6193368

Valeo 700060

COD. 14x1.25

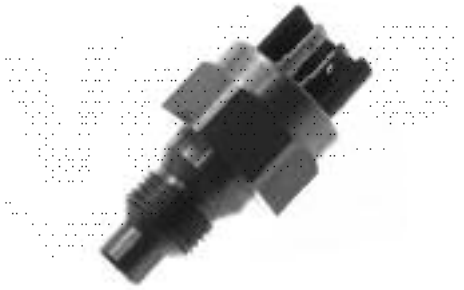

RENAULT	7700786467

Valeo 700061

COD. 3/8"x18 NPTF

FORD	7158126

Valeo 700401

P

CITROËN	16287T
FIAT	9619452580
PEUGEOT	16287T

Valeo 700404

P

CITROËN	1628CF
PEUGEOT	1628CF

700405 P

FIAT	9635651080
LANCIA	9635651080
PEUGEOT	1618Q0

700406 P

CITROËN	1628WV
FIAT	9640341280
PEUGEOT	1628WV

700407 P

CITROËN	1628XV
FORD	1148077
PEUGEOT	1628XV

700408 ELEC

CITROËN	1628WR
PEUGEOT	1628WR

700409 ELEC

FORD	1313847

700410 ELEC LEFT

CITROËN	1618N7
JAGUAR	C2C40183
LAND ROVER	LR010124
PEUGEOT	1618N7

700411 ELEC RIGHT

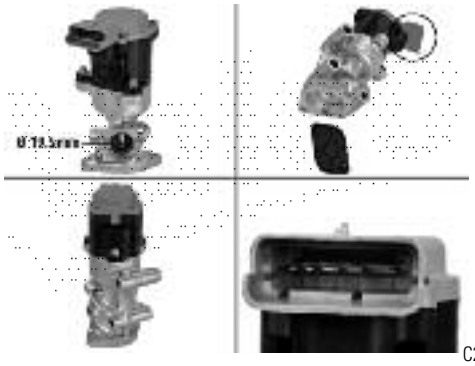

CITROËN	1618N6
JAGUAR	C2C40184
LAND ROVER	LR010125
PEUGEOT	1618N6

700412 ELEC

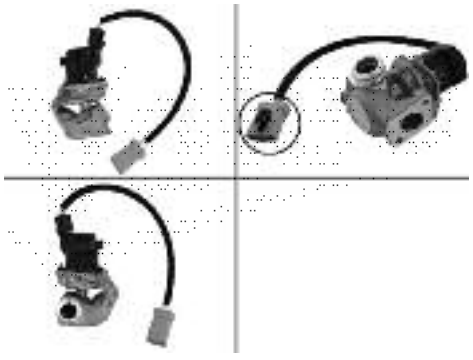

FORD	1353152
VOLVO	30750092

Valeo 700413 ELEC

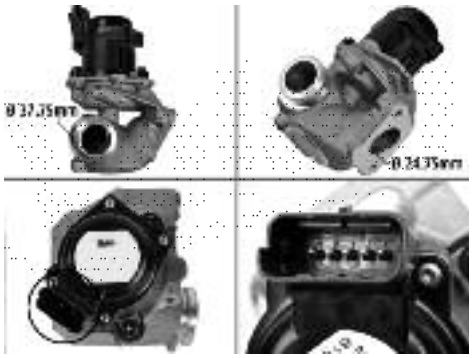

FORD	1363591
PEUGEOT	1618PF
TOYOTA	SU00100884

Valeo 700414 ELEC

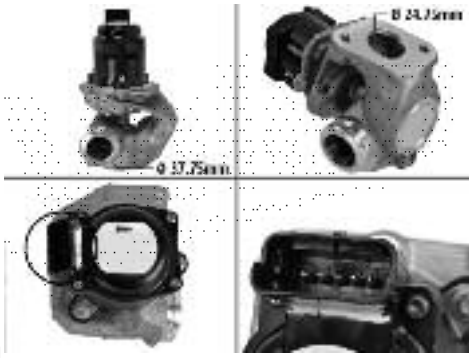

CITROËN	1618NR
CITROËN	1618NR
PEUGEOT	1618NR

Valeo 700416 ELEC

RENAULT	8200302798

Valeo 700420 ELEC LEFT

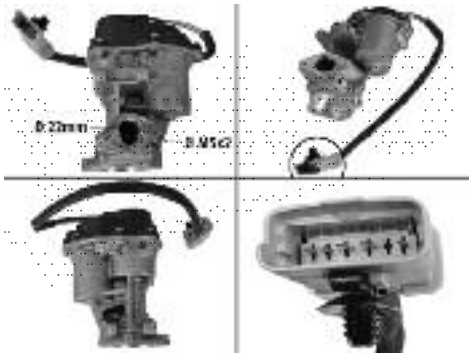

LAND ROVER	LR018322

Valeo 700421 ELEC RIGHT

LAND ROVER	LR018321

Valeo 700422 ELEC LEFT

FORD	LR004538
LAND ROVER	LR018323

Valeo 700423 ELEC RIGHT

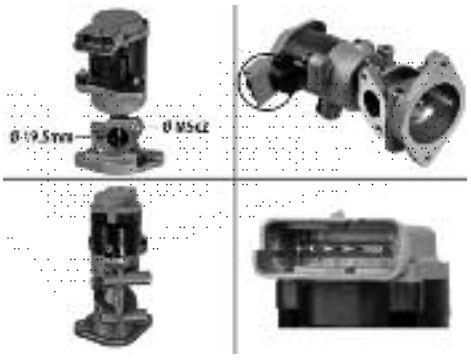

FORD	LR004539
LAND ROVER	LR018324

Valeo 700424 ELEC

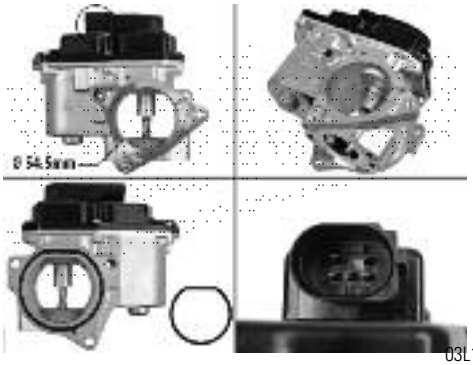

SEAT	03L131501G
SKODA	03L131501K
VOLKSWAGEN	03L131501K

700429 ELEC

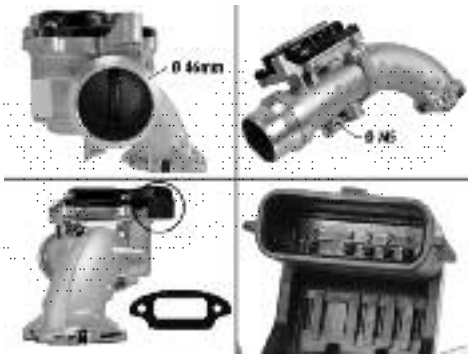

RENAULT 8200614985

700430 ELEC

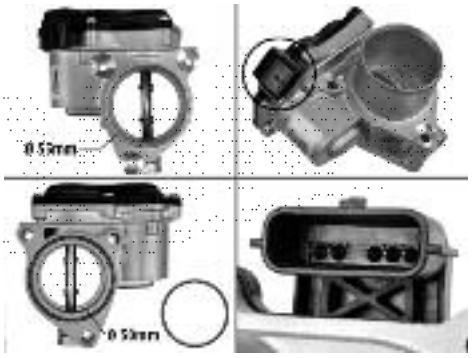

RENAULT 8200754913

700431 ELEC

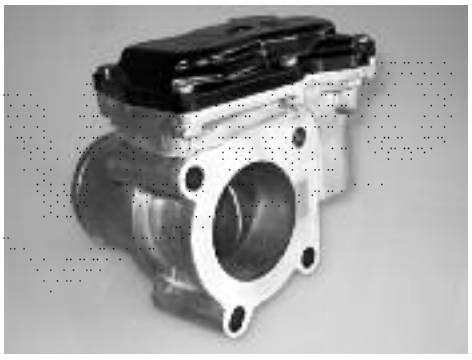

RENAULT 8200987453

700432 ELEC

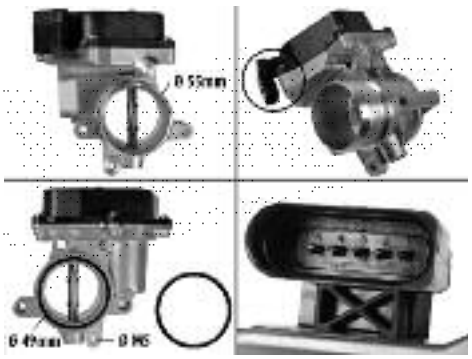

AUDI 03G128063F

700433 ELEC

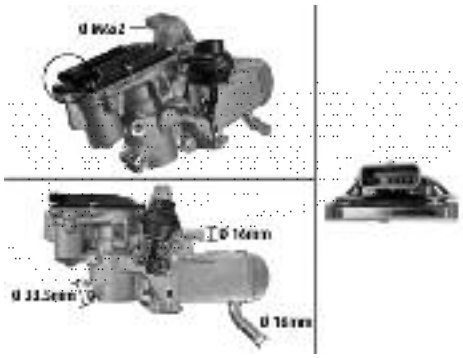

RENAULT 147106293R

700434 ELEC

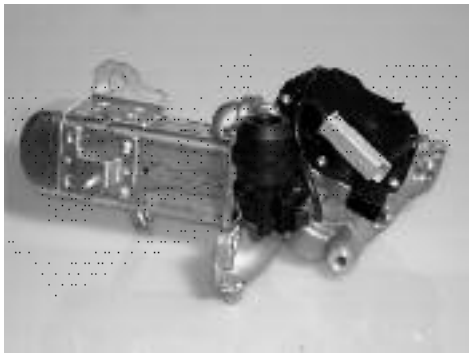

CITROËN 1618NQ
FORD 1836229
PEUGEOT 1618NQ

700435 ELEC

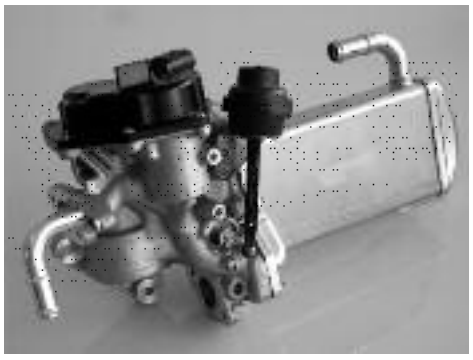

VOLKSWAGEN 03L131512BM

700436 ELEC

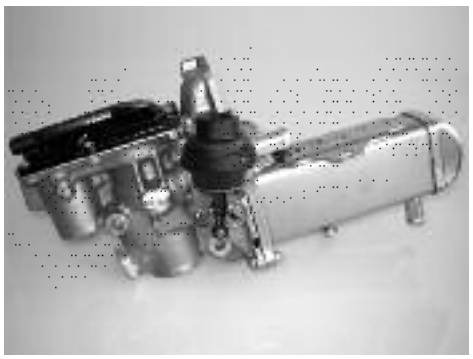

AUDI 03L131512CD

Valeo 700438 ELEC

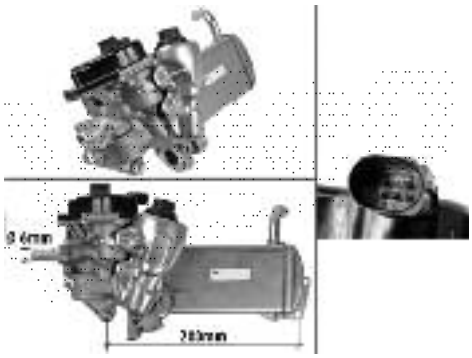

AUDI	03L 131 512 BN

Valeo 700439 ELEC

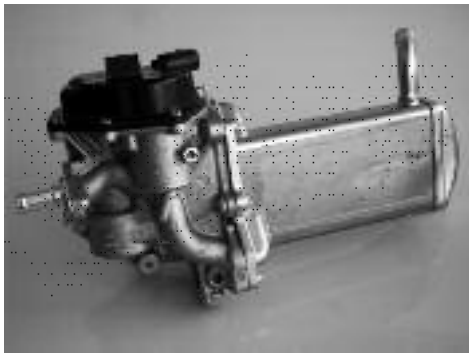

AUDI	03L131512DJ

Valeo 700440 P

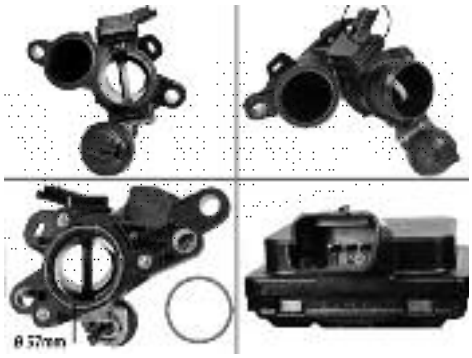

CITROËN	0345G7

Valeo 700441 ELEC

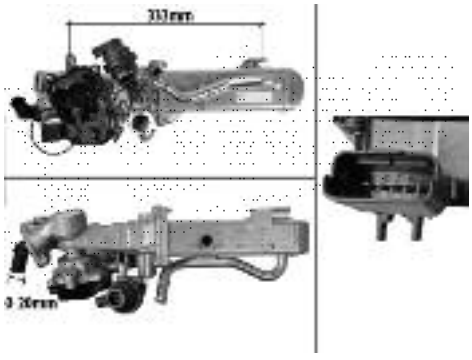

CITROËN	9678163380
PEUGEOT	9678163380

Valeo 700442 ELEC

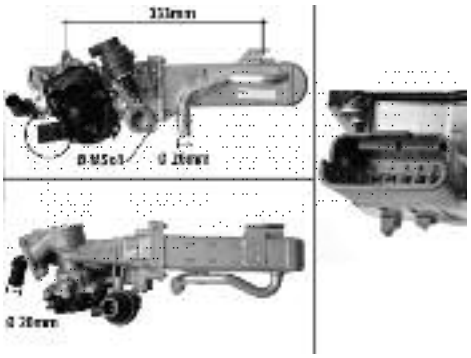

FORD	BG9Q-9Y456-AC
VOLVO	1701764

Valeo 700443 P

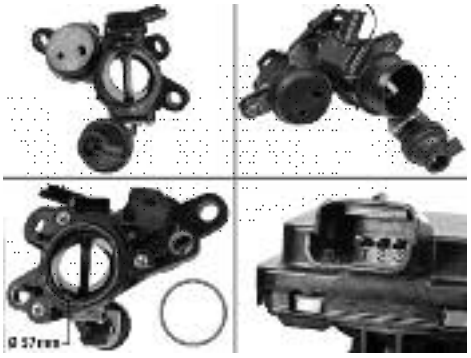

CITROËN	9674935480

Valeo 700444 ELEC

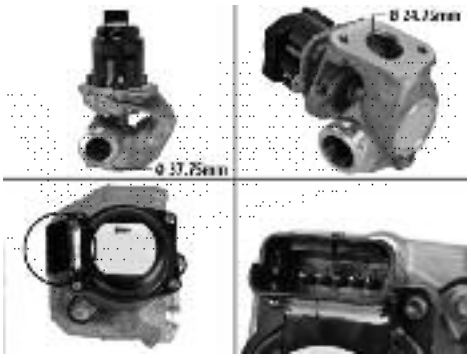

FORD	1526689
MINI	11717804950
VOLVO	36001412

Valeo 700447 ELEC

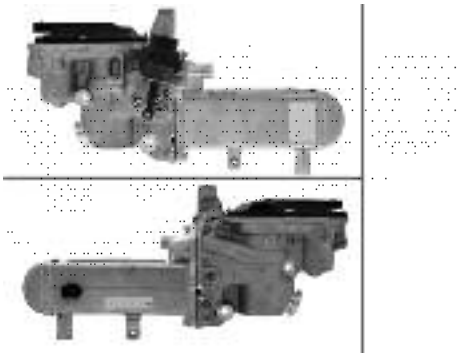

SUZUKI	1811167JG4

Valeo 700448 ELEC

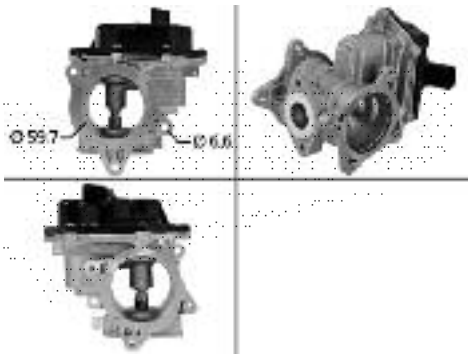

VOLKSWAGEN 147101478R

Valeo 700449 ELEC

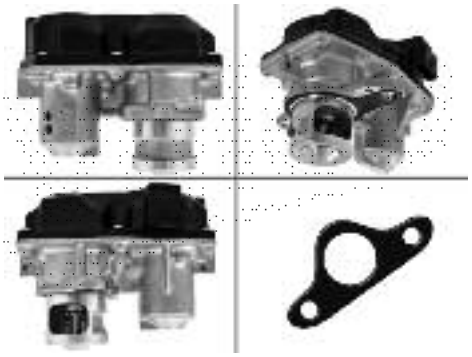

RENAULT 03L131501R

Valeo 700450 ELEC

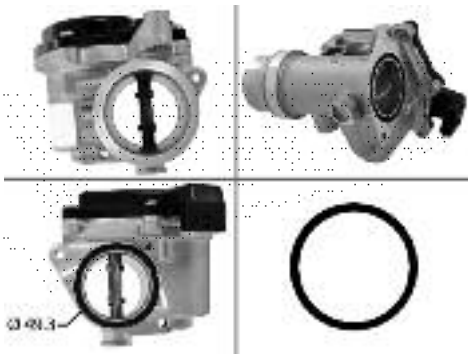

RENAULT 161A09794R

Valeo 700451 ELEC

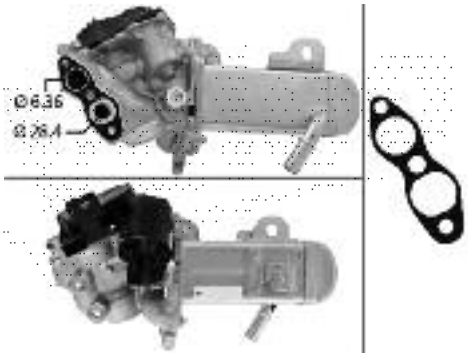

CITROËN 9678257280
PEUGEOT 9678257280

Valeo 700452 ELEC

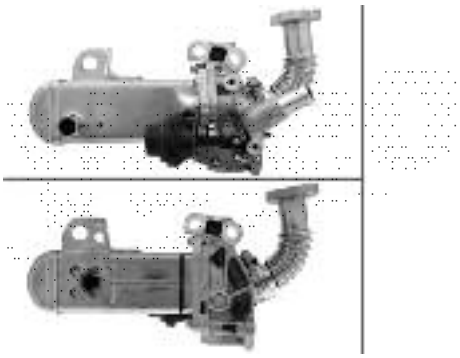

NISSAN 147355X00A

Valeo 700453 ELEC

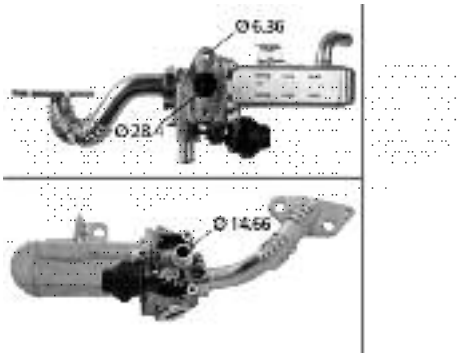

NISSAN 147351AT0A

Valeo 819743

mm29 COD. 22X1.5

(°) **(T1)**84 **(T2)**- **(T3)**94 **(T4)**-

AUDI 035919369C

Valeo 819744

mm29 COD. 22X1.5

(°) **(T1)**82 **(T2)**- **(T3)**92 **(T4)**-

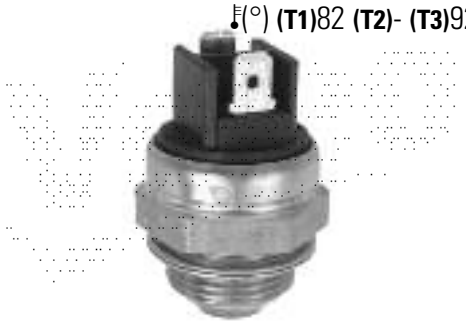

CITROËN 126415

819745

mm29 COD. 22X1.5

(°) **(T1)**82 **(T2)**- **(T3)**92 **(T4)**-

OPEL 4402309

819746

mm29 COD. 22X1.5

(°) **(T1)**95 **(T2)**- **(T3)**100 **(T4)**-

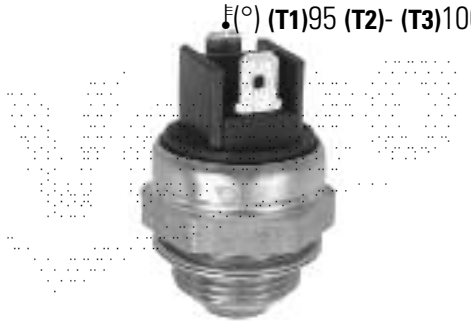

LAND ROVER PRC3366

819747

mm29 COD. 22X1.5

(°) **(T1)**92 **(T2)**96 **(T3)**97 **(T4)**101

CITROËN 126445

819748

mm29 COD. 22X1.5

(°) **(T1)**79 **(T2)**- **(T3)**88 **(T4)**-

SEAT SE021952600B

819749

mm29 COD. 22X1.5

(°) **(T1)**75 **(T2)**- **(T3)**85 **(T4)**-

PEUGEOT 126404

819751

mm29 COD. 22X1.5

(°) **(T1)**86 **(T2)**- **(T3)**95 **(T4)**-

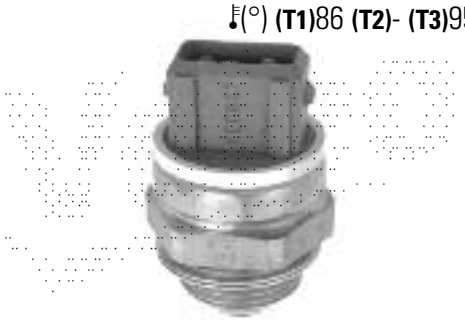

PEUGEOT 126423

819752

mm29 COD. 22X1.5

(°) **(T1)**92 **(T2)**- **(T3)**97 **(T4)**-

CITROËN 126440

819753

mm29 COD. 22X1.5

(°) **(T1)**91 **(T2)**- **(T3)**93 **(T4)**-

CITROËN 126443

819754

mm29 COD. 22X1.5

(°) **(T1)**79 **(T2)**83 **(T3)**84 **(T4)**88

PEUGEOT 126427

819755

mm29 COD. 22X1.5

(°) **(T1)**88 **(T2)**92 **(T3)**93 **(T4)**97

CITROËN 126444

819756

mm29 COD. 22X1.5

(°) **(T1)**68 **(T2)**- **(T3)**78 **(T4)**-

RENAULT 6001023839

819757

mm29 COD. 22X1.5

(°) **(T1)**79 **(T2)**- **(T3)**88 **(T4)**-

CITROËN 126414

819758

mm29 COD. 22X1.5

(°) **(T1)**68 **(T2)**- **(T3)**82 **(T4)**-

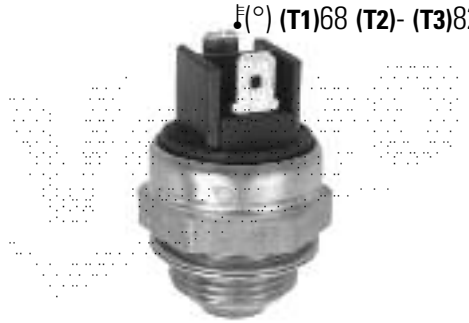

PEUGEOT 024212

819759

mm29 COD. 22X1.5

(°) **(T1)**87 **(T2)**- **(T3)**92 **(T4)**-

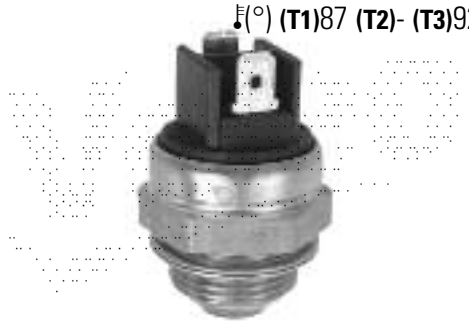

ALFA ROMEO 60564432

819760

mm29 COD. 22X1.5

(°) **(T1)**86 **(T2)**- **(T3)**95 **(T4)**-

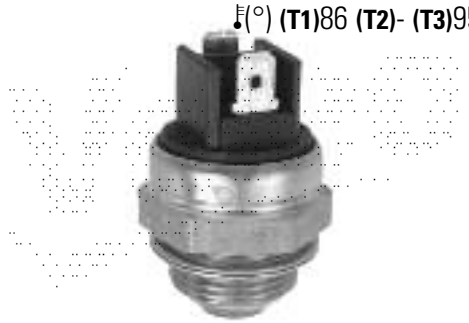

VOLKSWAGEN 055919369C

819761

mm29 COD. 22X1.5

(°) **(T1)**92 **(T2)**- **(T3)**97 **(T4)**-

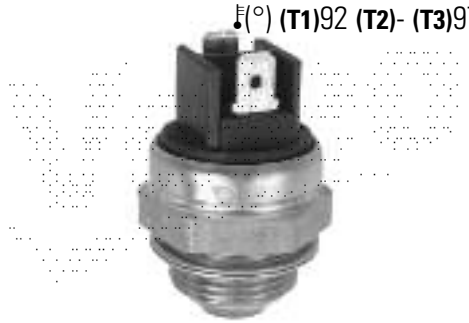

CITROËN 95492854

819762

mm29 COD. 22X1.5

(°) **(T1)**87 **(T2)**- **(T3)**92 **(T4)**-

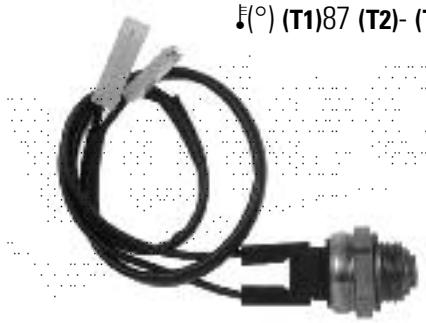

FIAT 5951985

819764

mm29 COD. 22X1.5

(°) **(T1)**87 **(T2)**- **(T3)**92 **(T4)**-

CITROËN 126411

819765

mm29 COD. 22x1.5

(°) **(T1)**87 **(T2)**- **(T3)**92 **(T4)**-

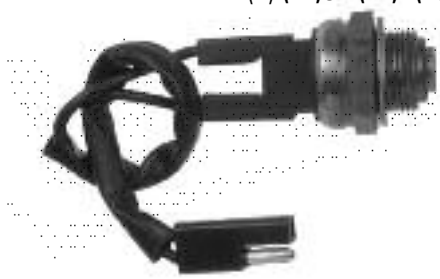

FIAT 82435465

819766

mm29 COD. 22x1.5

(°) **(T1)**87 **(T2)**- **(T3)**92 **(T4)**-

AUTOBIANCHI 4478951

819767

mm29 COD. 22X1.5

(°) **(T1)**87 **(T2)**- **(T3)**92 **(T4)**-

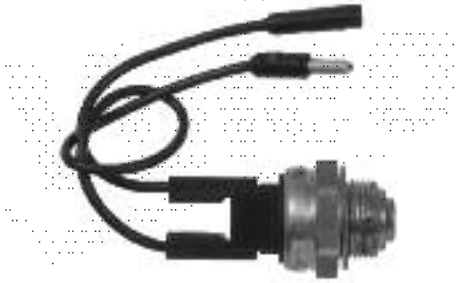

FIAT 4477081

819768

mm29 COD. 22X1.5

(°) **(T1)**87 **(T2)**- **(T3)**92 **(T4)**-

LANCIA 82355032

819769

mm29 COD. 22X1.5

(°) **(T1)**84 **(T2)**91 **(T3)**95 **(T4)**102

VOLKSWAGEN 191959481C

819770

mm29 COD. 22X1.5

(°) **(T1)**83 **(T2)**88 **(T3)**87 **(T4)**92

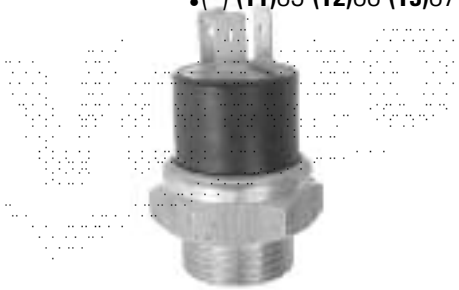

PEUGEOT 126417

819771

mm29 COD. 22X1.5

(°) **(T1)**92 **(T2)**96 **(T3)**97 **(T4)**101

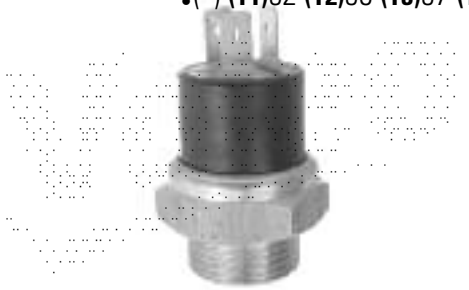

PEUGEOT 126422

819772

mm29 COD. 22X1.5

(°) **(T1)**79 **(T2)**83 **(T3)**84 **(T4)**88

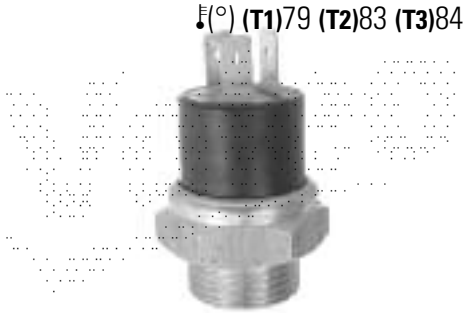

PEUGEOT 126416

819773

mm29 COD. 22X1.5

(°) **(T1)**88 **(T2)**92 **(T3)**93 **(T4)**97

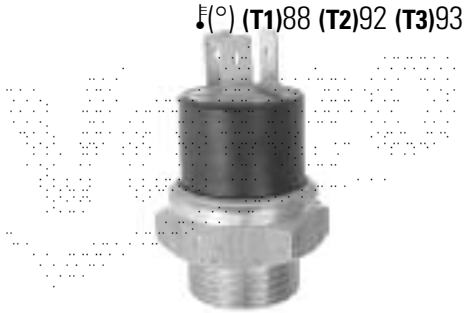

LANCIA 82477919

819774

mm29 COD. 22X1.5

(°) **(T1)**87 **(T2)**- **(T3)**92 **(T4)**-

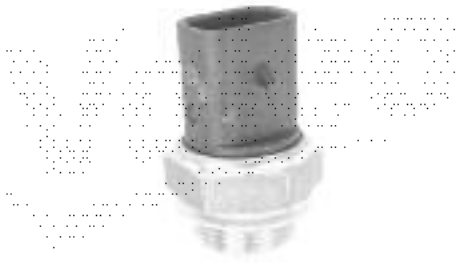

AUTOBIANCHI 5992746

819775

mm29 COD. 22X1.5

(°) **(T1)**83 **(T2)**87 **(T3)**88 **(T4)**92

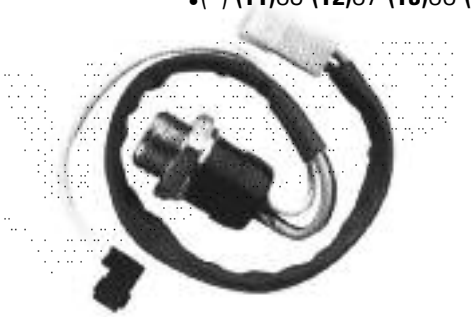

FIAT 7628799

819781

mm29 COD. 22X1.5

(°) **(T1)**82 **(T2)**82 **(T3)**92 **(T4)**96

RENAULT 7700777683

819782

mm29 COD. 22X1.5

(°) **(T1)**82 **(T2)**- **(T3)**92 **(T4)**-

RENAULT 7700777685

819783

mm29 COD. 22X1.5

(°) **(T1)**82 **(T2)**- **(T3)**92 **(T4)**-

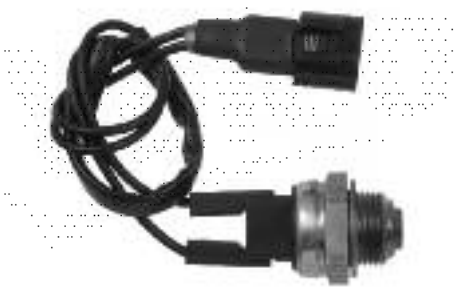

RENAULT 7700796048

819784

mm29 COD. 22X1.5

(°) **(T1)**88 **(T2)**- **(T3)**93 **(T4)**-

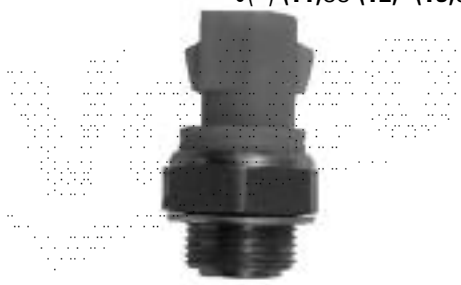

FORD 7001609

819785

mm29 COD. 22X1.5

(°) **(T1)**97 **(T2)**- **(T3)**102 **(T4)**-

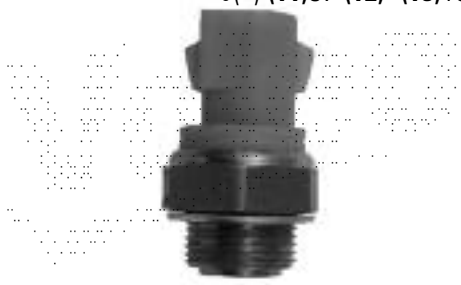

FORD 7001611

819786

mm29 COD. 22X1.5

(°) **(T1)**77 **(T2)**- **(T3)**88 **(T4)**-

FORD 6144361

819825

mm29 COD. 22X1.5

(°) **(T1)**83 **(T2)**- **(T3)**90 **(T4)**-

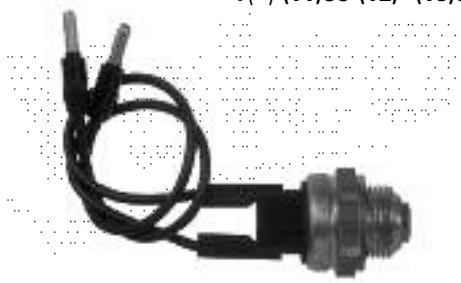

FIAT 4475635

819826

mm29 COD. 22X1.5

(°) **(T1)**87 **(T2)**- **(T3)**92 **(T4)**-

FIAT 82436409

819827

mm29 COD. 22X1.5

(°) **(T1)**83 **(T2)**87 **(T3)**88 **(T4)**92

ALFA ROMEO 0060809965

819828

mm29 COD. 22X1.5

(°) **(T1)**83 **(T2)**87 **(T3)**88 **(T4)**92

CITROËN 126410

819829

mm29 COD. 22X1.5

(°) **(T1)**95 **(T2)**- **(T3)**100 **(T4)**-

OPEL 1341018

Valeo 819830

mm29 COD. 22X1.5

(°) **(T1)**95 **(T2)**- **(T3)**100 **(T4)**-

OPEL 1341011

Valeo 819837

(A)- **(B)**- **(C)**- **(D)**-

79 (°C)

(°) 79

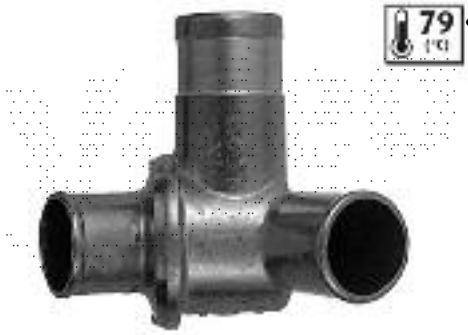

FIAT 4440367

Valeo 819838

(A)43, 5 **(B)**- **(C)**23 **(D)**-

(°) 86

CITROËN 95495311

Valeo 819839

(A)68 **(B)**47, 6 **(C)**26 **(D)**10, 5

(°) 83

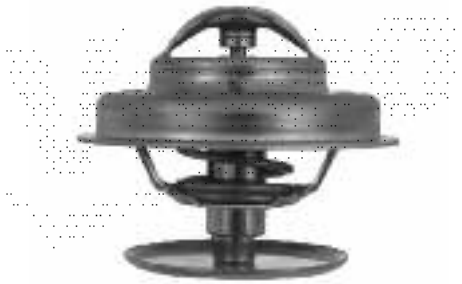

PEUGEOT 133734

Valeo 819840

(A)68 **(B)**47, 6 **(C)**26 **(D)**10, 5

(°) 86

RENAULT 7700703136

Valeo 819841

(A)68 **(B)**47,6 **(C)**26 **(D)**10,5

87 (°C)

(°) 87

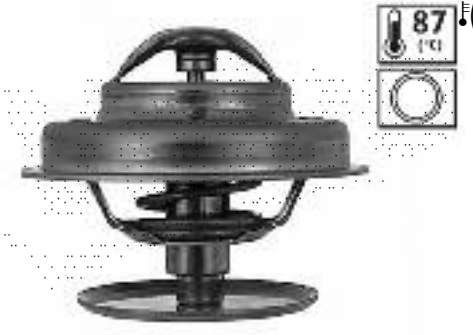

VOLVO 2734804

Valeo 819842

(A)43,5 **(B)**- **(C)**23 **(D)**-

80 (°C)

(°) 80

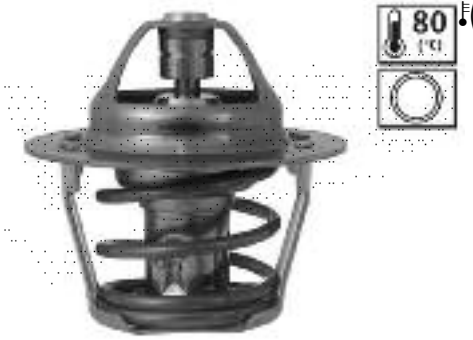

DAIHATSU 1634187785000

Valeo 819845

(A)54 **(B)**- **(C)**22,5 **(D)**-

82 (°C)

PACK

(°) 82

ALFA ROMEO 105001106400

819846 (A)54 (B)- (C)22, 5 (D)-

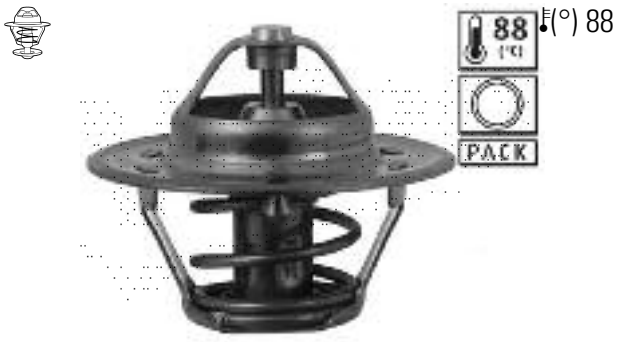

(°) 88

HYUNDAI 2550022600

819847 (A)54 (B)35 (C)29, 5 (D)-

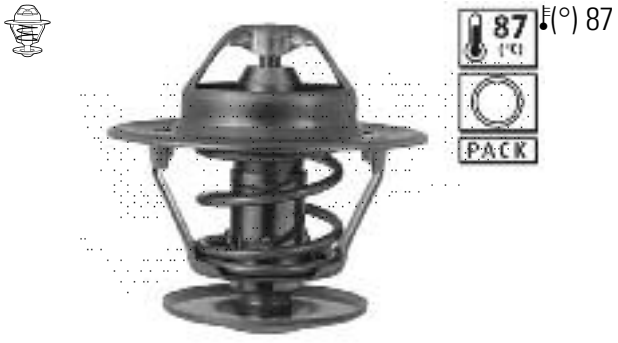

(°) 87

FORD 0801587

819848 (A)54 (B)35 (C)29, 5 (D)-

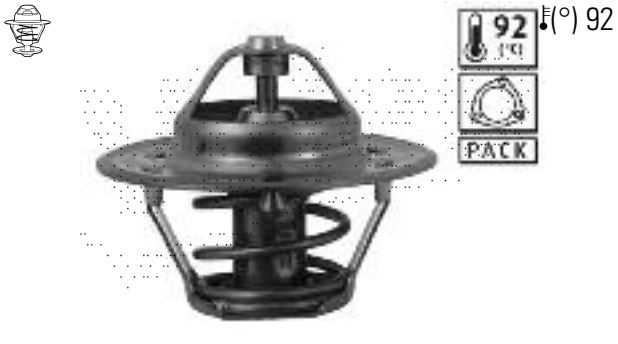

(°) 92

FORD 6058444

819849 (A)54 (B)- (C)22, 5 (D)-

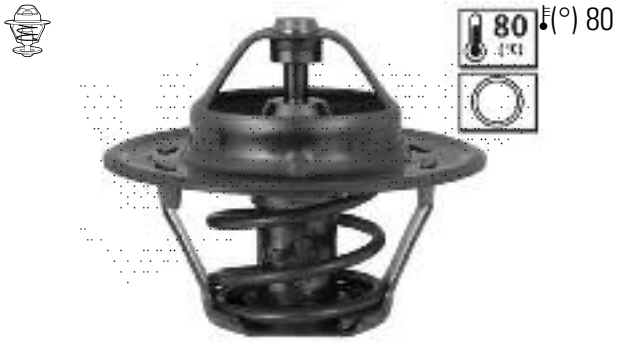

(°) 80

CITROËN 5428849

819850 (A)54 (B)- (C)22, 5 (D)-

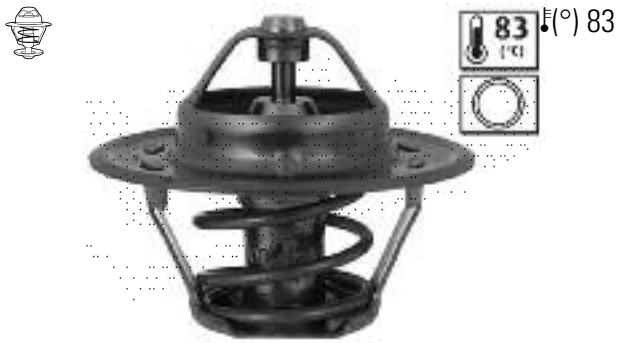

(°) 83

ROVER GTS102

819851 (A)54 (B)- (C)22, 5 (D)-

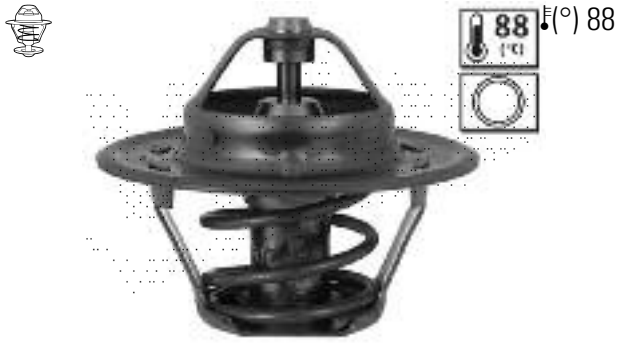

(°) 88

JEEP 83501426

819852 (A)54 (B)35 (C)32, 5 (D)-

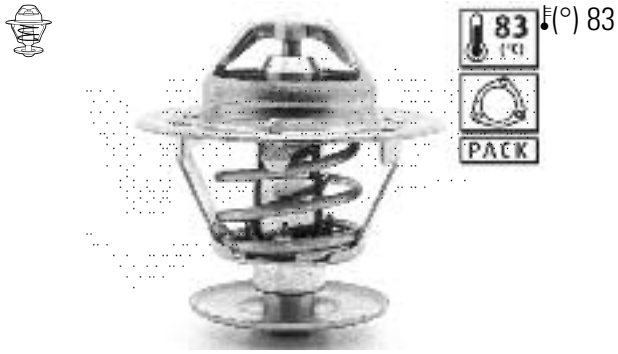

(°) 83

AUDI 059121113B

819853 (A)48 (B)- (C)20, 5 (D)2, 5

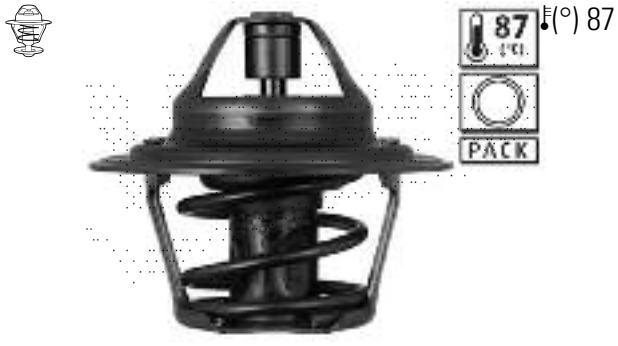

(°) 87

AUDI 036121113

819854 (A)48 (B)- (C)20, 5 (D)2, 5

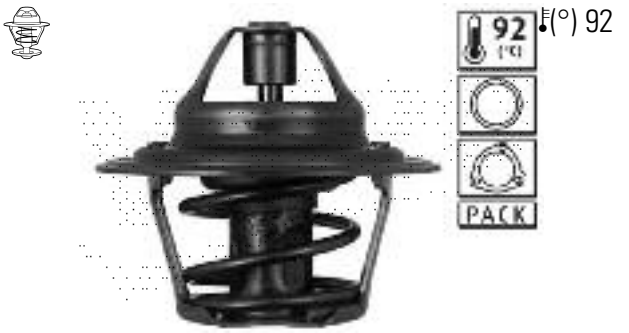

(°) 92

AUDI 036121113B

819855 (A)55, 5 (B)52, 6 (C)21, 7 (D)-

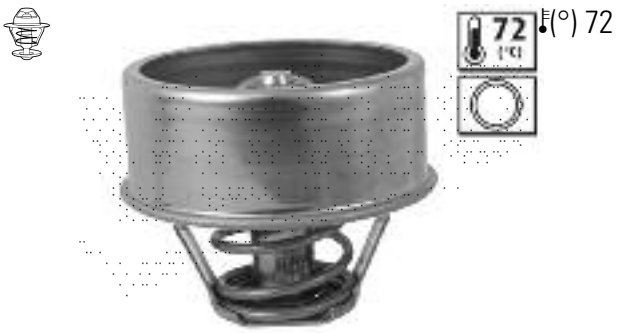

(°) 72

PEUGEOT 133725

819856 (A)55, 5 (B)52, 6 (C)21, 7 (D)-

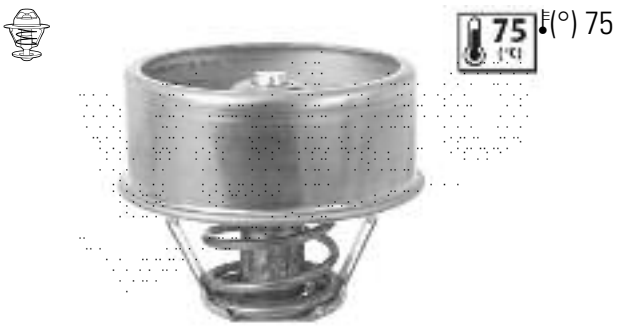

(°) 75

PEUGEOT 133726

819859 (A)53, 5 (B)- (C)22, 5 (D)-

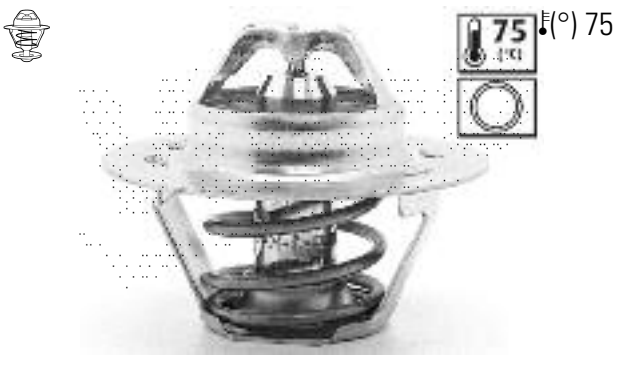

(°) 75

PEUGEOT 133720

819862 (A)53, 5 (B)- (C)22, 5 (D)-

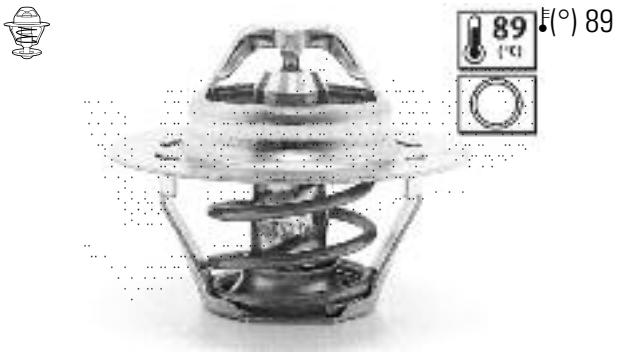

(°) 89

RENAULT 7701348373

819863 (A)53,5 (B)- (C)22,5 (D)-

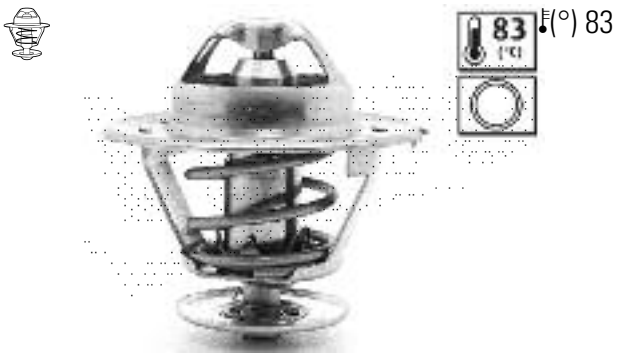

(°) 83

PEUGEOT 133753

819864 (A)54 (B)29 (C)33, 5 (D)-

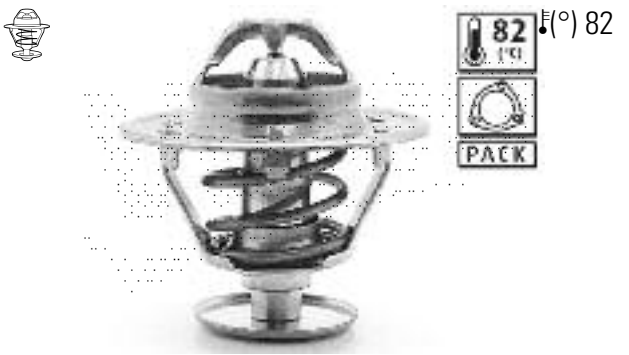

(°) 82

FORD 6129739

819865 (A)54 (B)29 (C)33, 5 (D)-

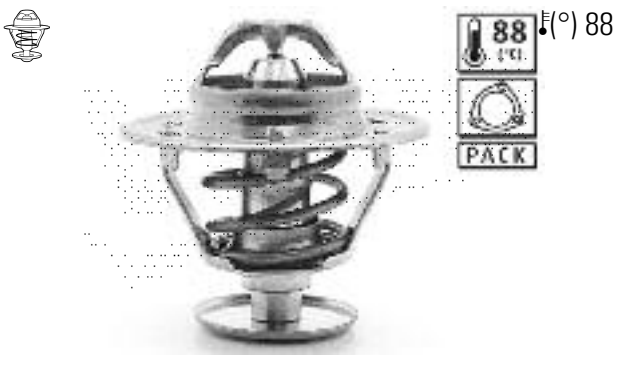

(°) 88

NISSAN 2120096011

819866 (A)48 (B)44,5 (C)21,7 (D)-

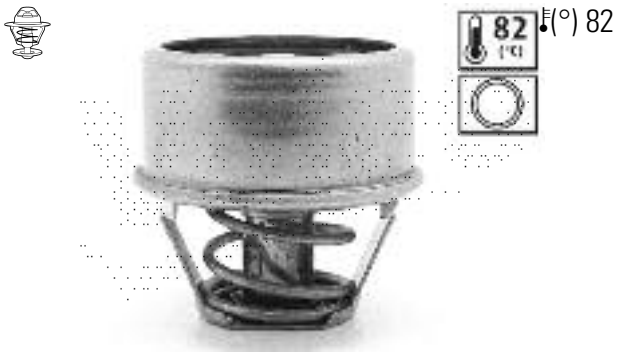

PEUGEOT 133735

819867 (A)54 (B)35 (C)31 (D)-

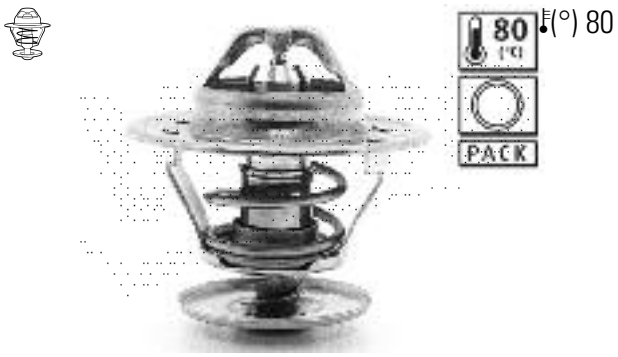

OPEL 1338024

819868 (A)54 (B)35 (C)31 (D)-

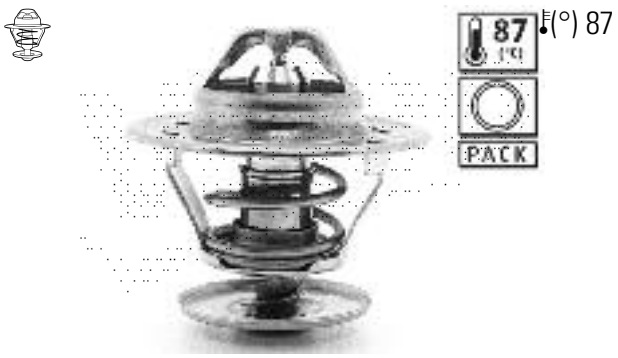

SEAT SE021032221B

819869 (A)54 (B)35 (C)31 (D)-

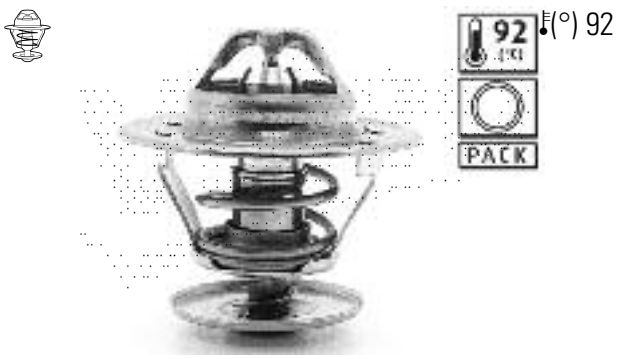

OPEL 1338038

819870 (A)67 (B)43 (C)26 (D)7, 5

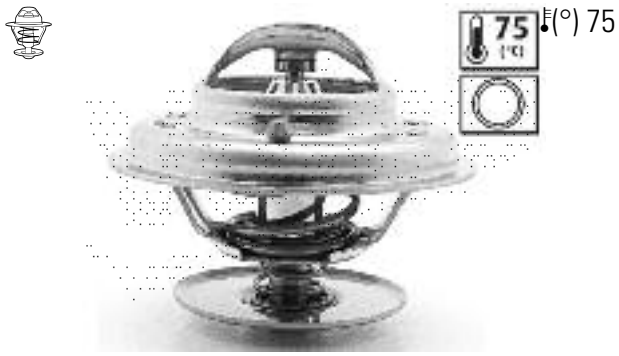

MERCEDES 1162000015

819872 (A)67 (B)43 (C)26 (D)7,5

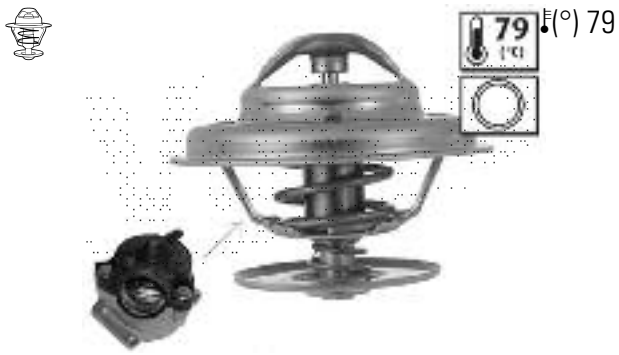

LANCIA 7910247116

819873 (A)67 (B)43 (C)26 (D)7, 5

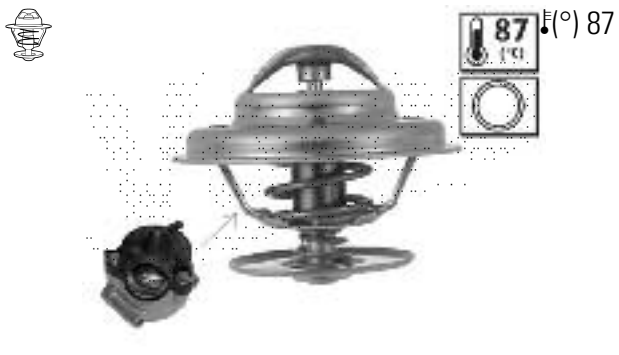

MERCEDES 1102000515

819874 (A)51, 9 (B)- (C)22, 5 (D)-

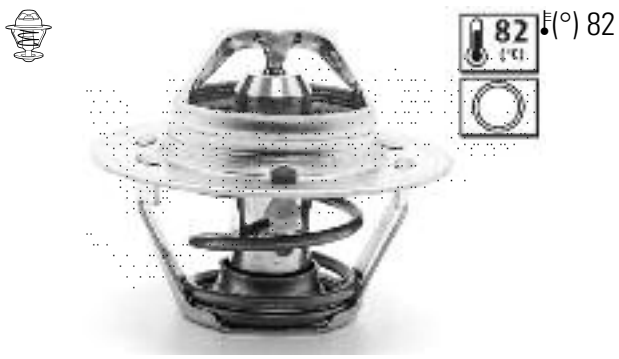

HONDA 19300PB2813

Valeo 819875 (A)51, 9 (B)- (C)22, 5 (D)-

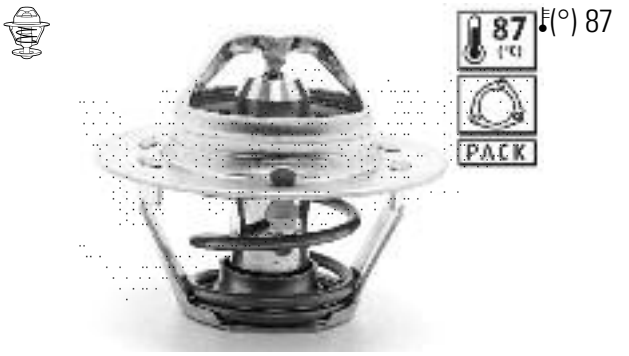

(°) 87

CHRYSLER 4573560

Valeo 819876 (A)55, 5 (B)52, 6 (C)21, 7 (D)-

(°) 72

PEUGEOT 133740

Valeo 819877 (A)55, 5 (B)52, 6 (C)21, 7 (D)-

(°) 78

PEUGEOT 133766

Valeo 819878 (A)55,5 (B)52,6 (C)21,7 (D)-

(°) 80

PEUGEOT 133759

Valeo 819879 (A)55,5 (B)52,6 (C)21,7 (D)-

(°) 84

RENAULT 7701348139

Valeo 819881 (A)54 (B)29 (C)25 (D)-

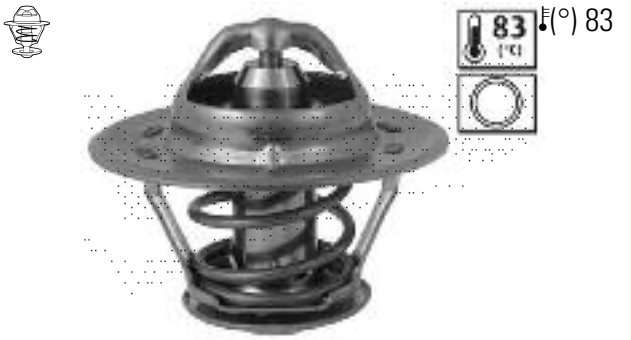

(°) 83

ALFA ROMEO 0060504230

Valeo 819882 (A)54 (B)29 (C)31, 7 (D)-

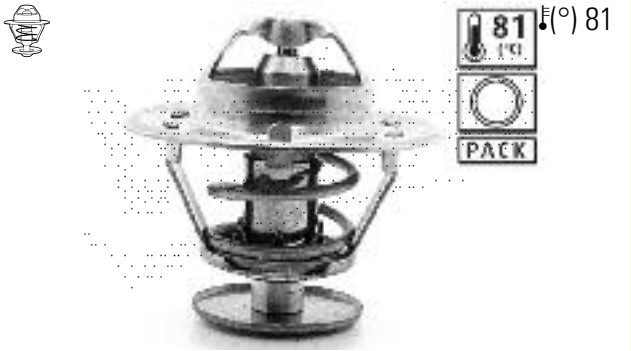

(°) 81

ALFA ROMEO 0060805288

Valeo 819883 (A)54 (B)29 (C)31,7 (D)-

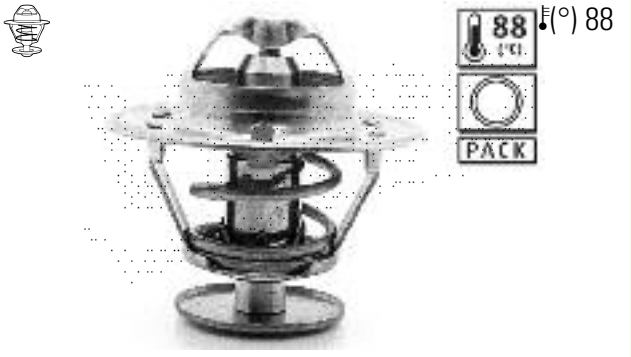

(°) 88

SAAB 8389512

819884 (A)54 (B)29 (C)31, 7 (D)-

MITSUBISHI MD997606

819885 (A)56 (B)32 (C)35 (D)4,3

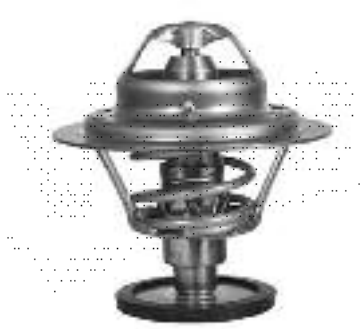

AUTOBIANCHI 4409254

819886 (A)- (B)- (C)21, 7 (D)-

AUTOBIANCHI 4311105

819887 (A)67 (B)29 (C)35 (D)2, 5

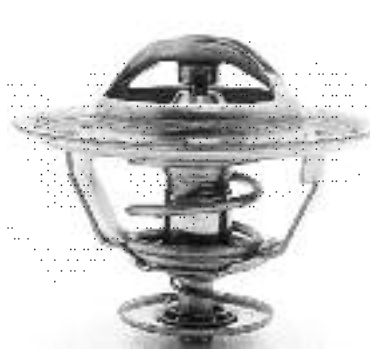

BMW 11531254065

819889 (A)54 (B)29 (C)30 (D)-

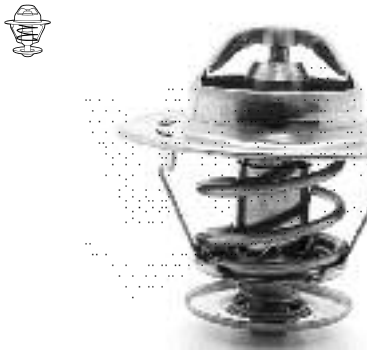

TALBOT 133797

819891 (A)68 (B)47, 6 (C)26 (D)10, 5

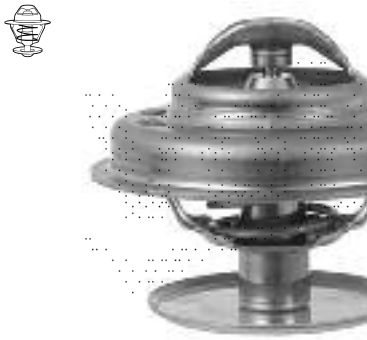

RENAULT 7701349415

819894 (A)67 (B)35 (C)25, 5 (D)7, 5

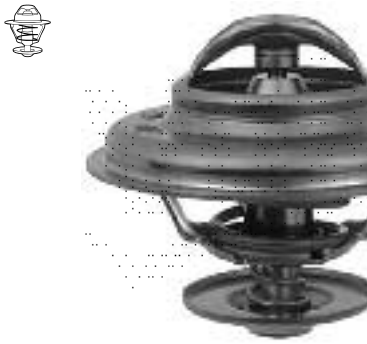

BMW 11532241628

819895 (A)53,5 (B)29 (C)35,2 (D)-

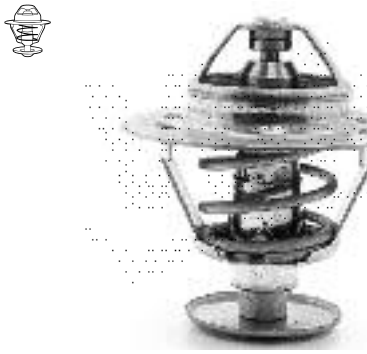

NISSAN 743000640

819896 (A)53, 5 (B)29 (C)35, 2 (D)-

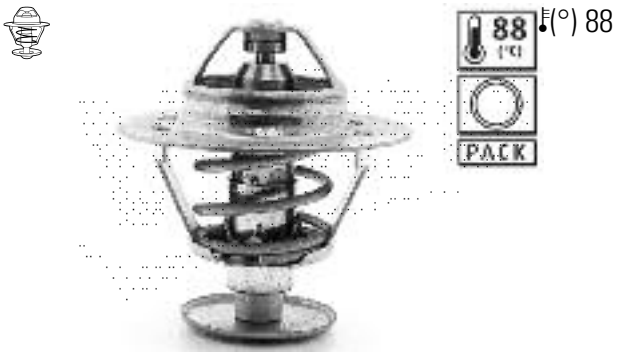

(°) 88

CITROËN 96020348

819897 (A)45, 5 (B)29 (C)35, 2 (D)-

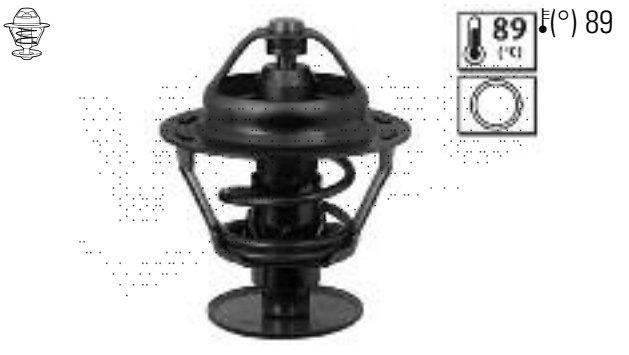

(°) 89

ROVER GTS299

819898 (A)68 (B)29 (C)26 (D)10, 5

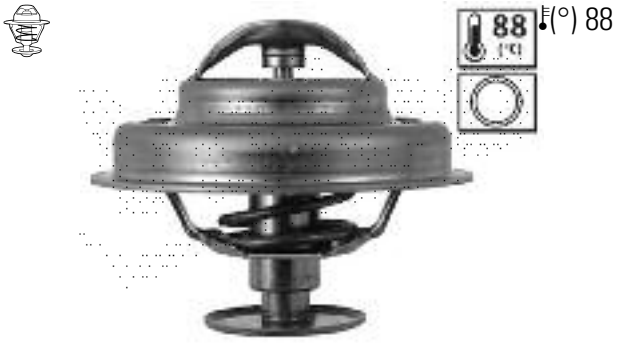

(°) 88

RENAULT 7700697157

819899 (A)57 (B)- (C)22, 5 (D)-

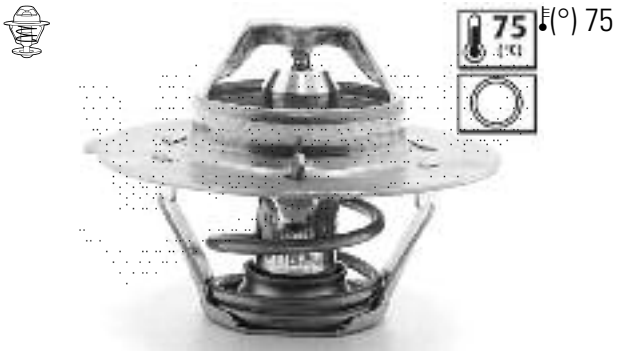

(°) 75

PEUGEOT 133749

819900 (A)57 (B)- (C)22, 5 (D)-

(°) 82

CITROËN 91500723

819903 (A)54 (B)29 (C)25 (D)-

(°) 79

IVECO 7303615

819904 (A)- (B)- (C)- (D)-

(°) 80

BMW 11531253249

819905 (A)68 (B)29 (C)26 (D)10, 5

(°) 81

PEUGEOT 133768

819911 (A)48 (B)29 (C)32, 5 (D)2, 5

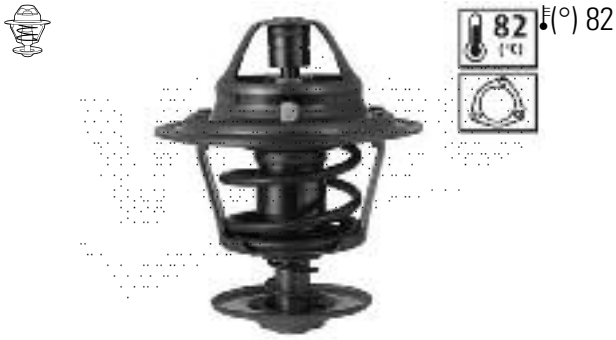

NISSAN 2120077A65

819912 (A)- (B)- (C)- (D)-

LADA 2108130601010

819913 (A)- (B)- (C)- (D)-

LADA 21011306010

819915 (A)54 (B)- (C)22, 5 (D)-

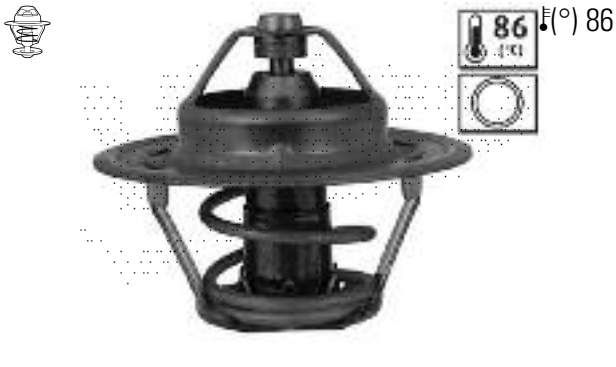

CITROËN 95588361

819916 (A)53, 5 (B)- (C)22, 5 (D)-

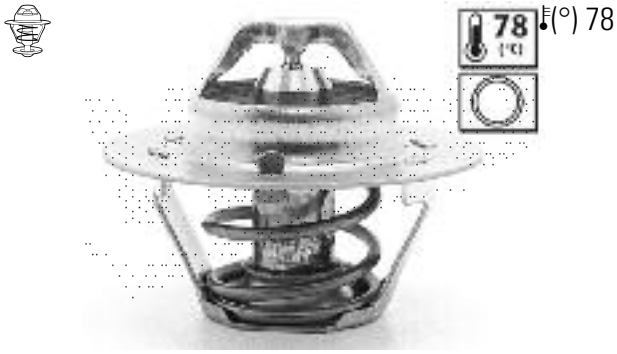

RENAULT 7700735456

819921 (A)43, 5 (B)40, 5 (C)37 (D)25

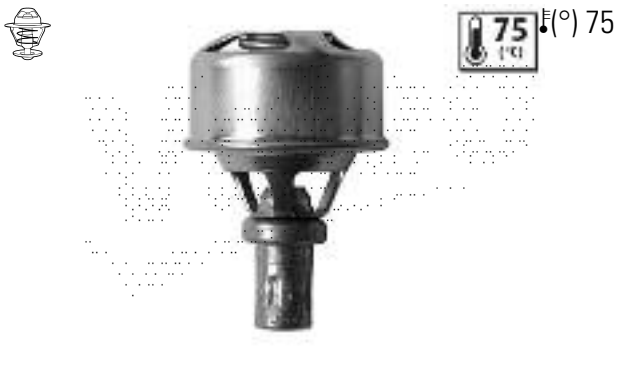

RENAULT 7701348375

819922 (A)43, 5 (B)40, 5 (C)37 (D)25

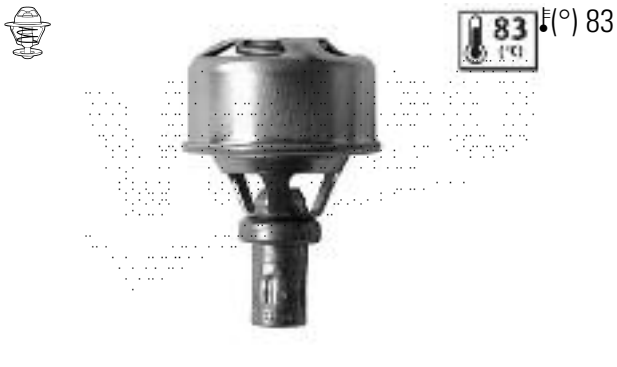

RENAULT 7701348376

819923 (A)43, 5 (B)40, 5 (C)37 (D)25

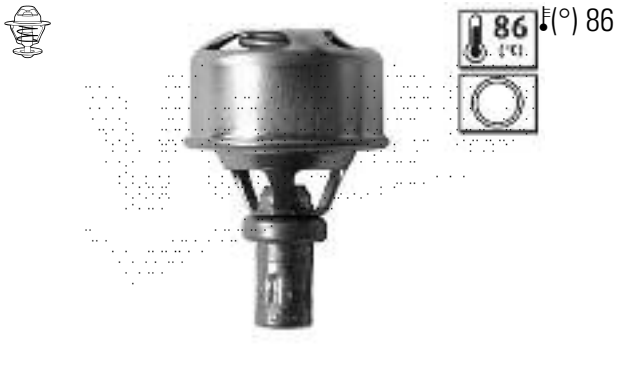

RENAULT 7701348374

819924 (A)43, 5 (B)40, 5 (C)37 (D)25

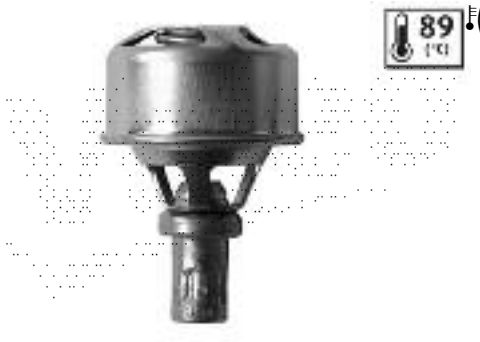

RENAULT 7701348068

819926 (A)54 (B)35 (C)30, 5 (D)-

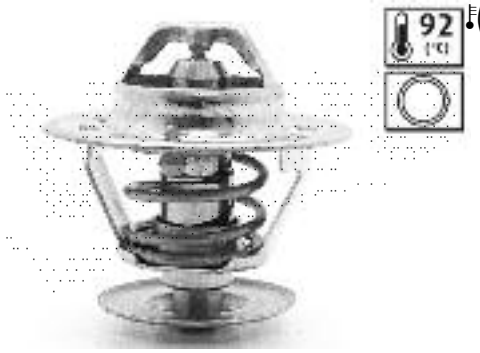

VOLVO 2716645

819927 (A)60 (B)- (C)22, 5 (D)-

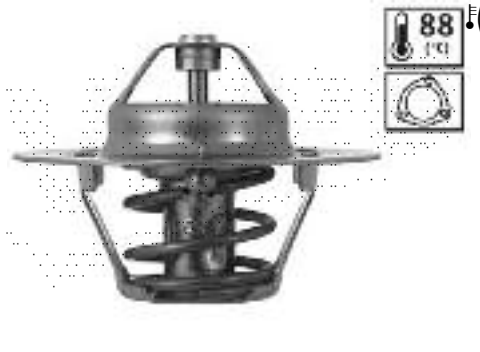

SKODA 114095090

819929 (A)68 (B)- (C)16 (D)7, 5

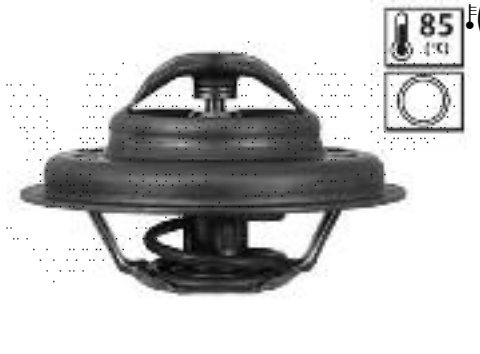

CITROËN 133812

819930 (A)68 (B)29 (C)26 (D)10, 5

CITROËN 96101599

819933 (A)54 (B)29 (C)13 (D)18

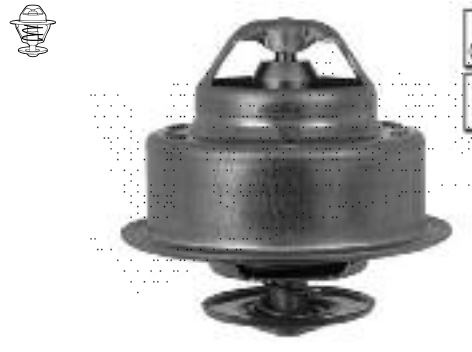

VOLVO 2734598

819934 (A)55 (B)- (C)22, 5 (D)-

CITROËN 133826

819935 (A)48 (B)- (C)22, 5 (D)-

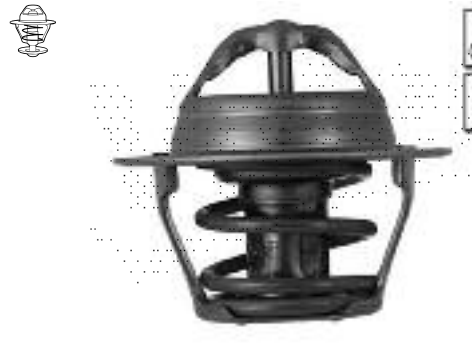

DAEWOO 03038094

819936 (A)68 (B)29 (C)26 (D)10, 5

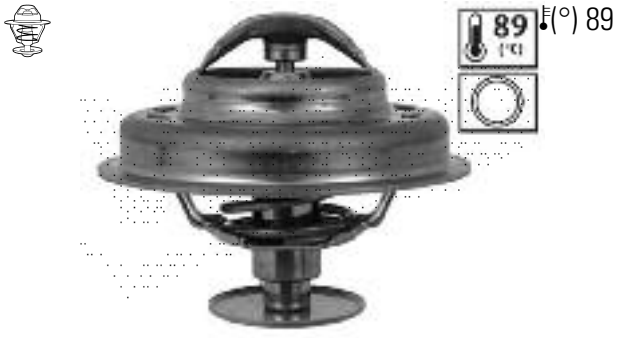

CITROËN 96005005

819937 (A)68 (B)29 (C)26 (D)10, 5

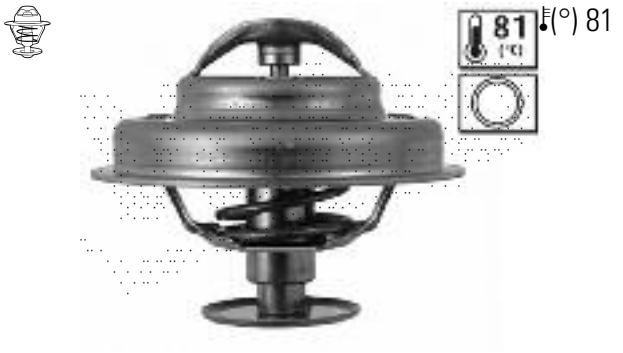

RENAULT 7700665226

819938 (A)- (B)- (C)15 (D)-

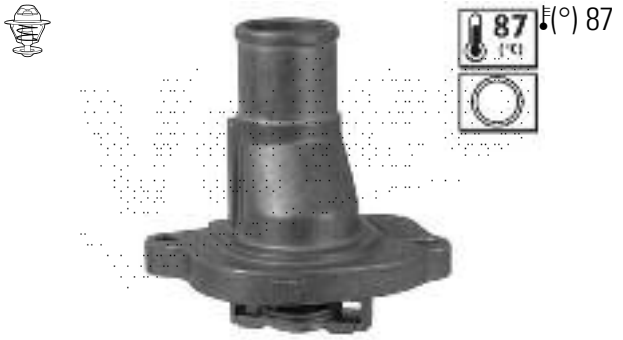

AUTOBIANCHI 7589135

819939 (A)- (B)- (C)- (D)-

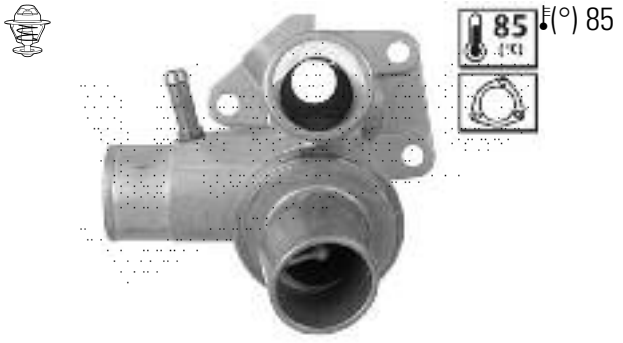

FIAT 5954579

819940 (A)- (B)- (C)- (D)-

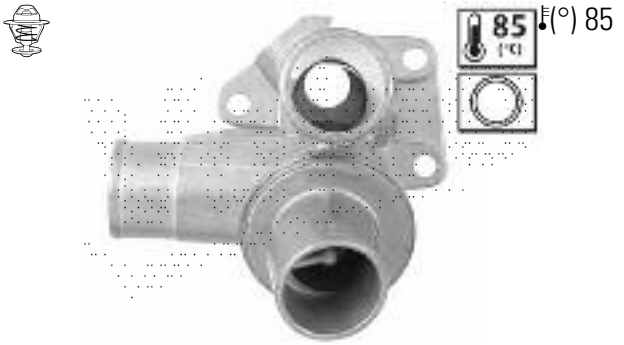

FIAT 7671375

819942 (A)51, 9 (B)- (C)19 (D)-

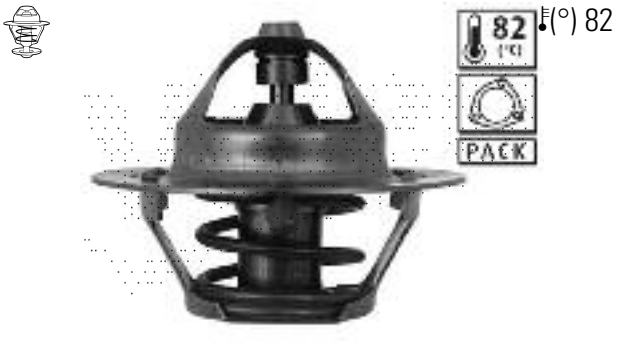

HONDA 19300PA0003

819943 (A)51,9 (B)- (C)19 (D)-

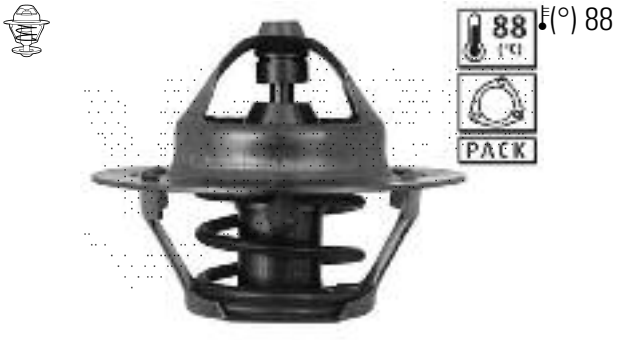

DAIHATSU 9091603040000

819944 (A)52 (B)28 (C)34 (D)-

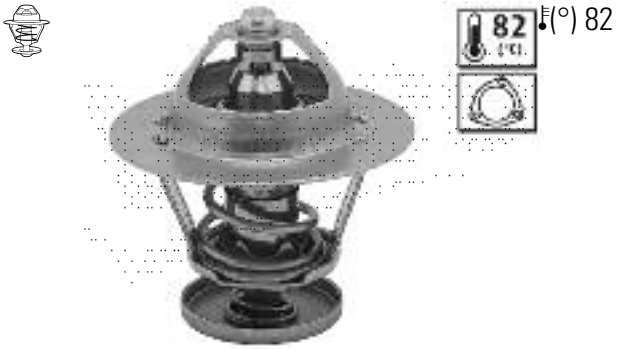

DAIHATSU 1634187789000

819945 (A)48 (B)28 (C)33 (D)-

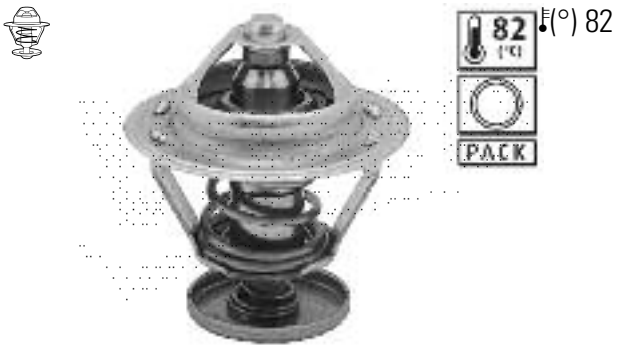

(°) 82

NISSAN 212009F600

819946 (A)53, 5 (B)- (C)22, 5 (D)-

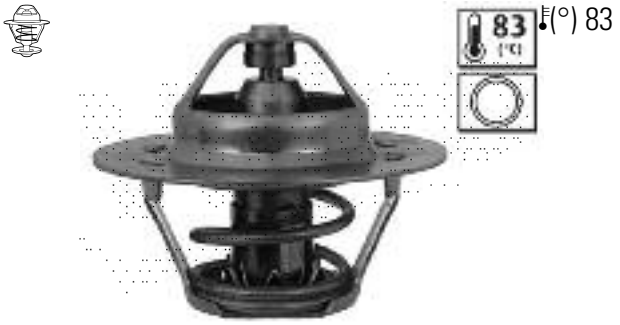

(°) 83

CITROËN 133837

819948 (A)67 (B)35 (C)25, 5 (D)7, 5

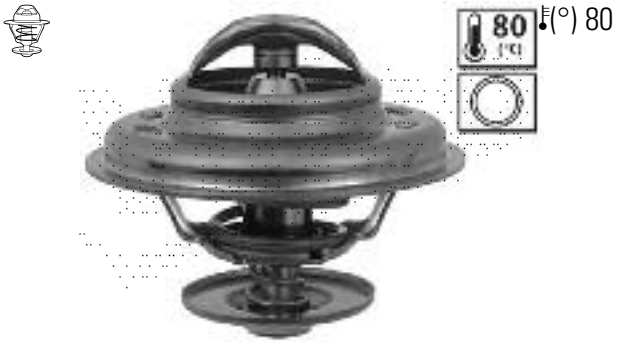

(°) 80

BMW 11531713040

819949 (A)67 (B)35 (C)25, 5 (D)7, 5

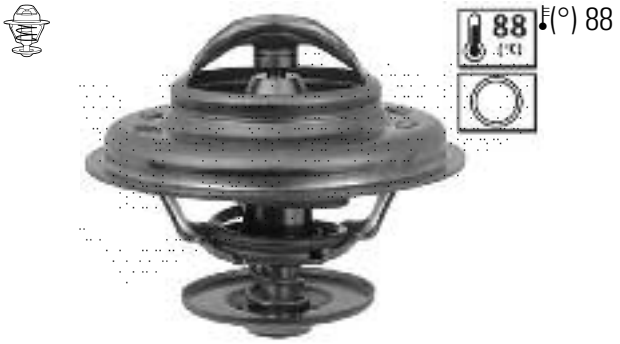

(°) 88

BMW 11537511580

819950 (A)55 (B)29 (C)35, 5 (D)-

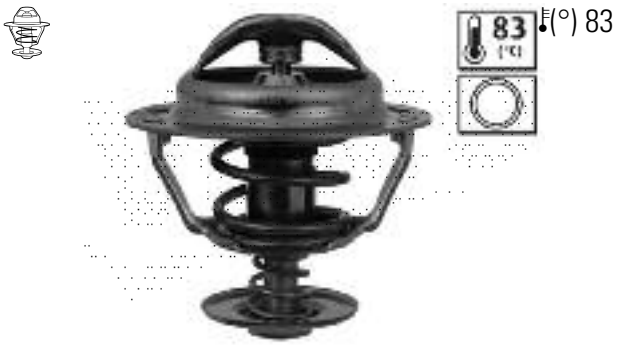

(°) 83

FIAT 9616090180

819951 (A)68 (B)- (C)13 (D)10, 5

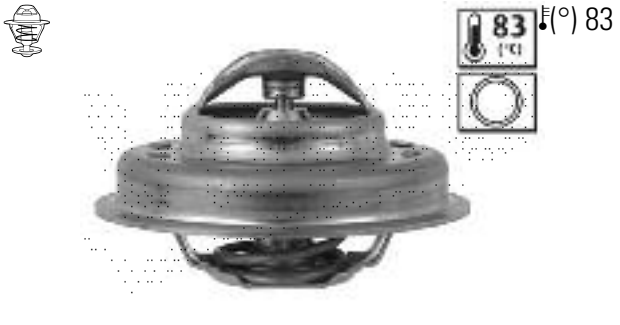

(°) 83

PEUGEOT 133824

819952 (A)68 (B)29 (C)26 (D)10, 5

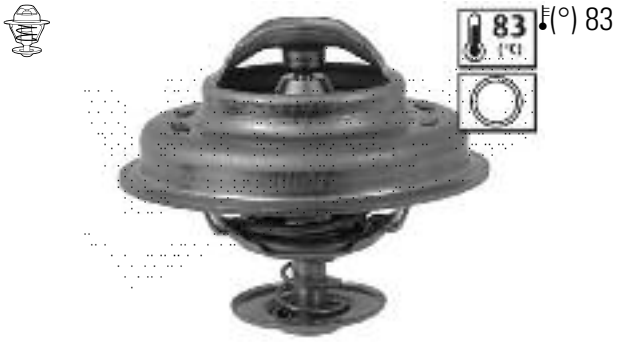

(°) 83

CITROËN 96159513

819953 (A)- (B)- (C)- (D)-

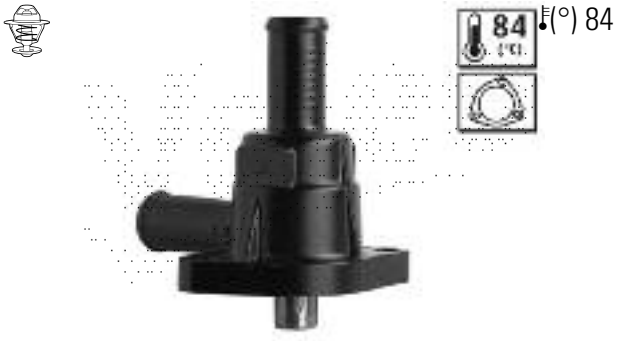

(°) 84

CITROËN 133838

819954 (A)- (B)- (C)- (D)-

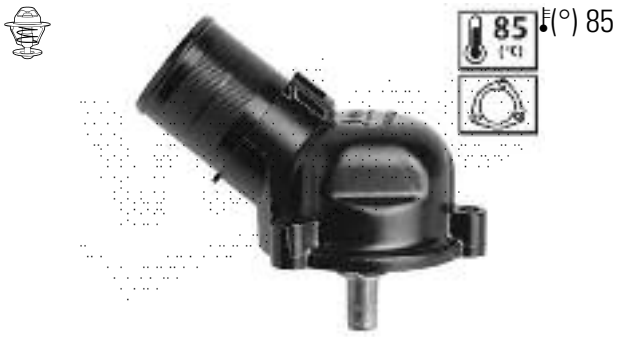

CITROËN 1336F9

819955 (A)55 (B)29 (C)35, 5 (D)-

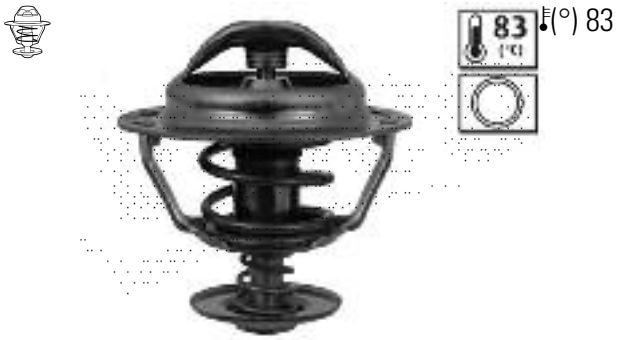

RENAULT 7701038494

819956 (A)- (B)- (C)- (D)-

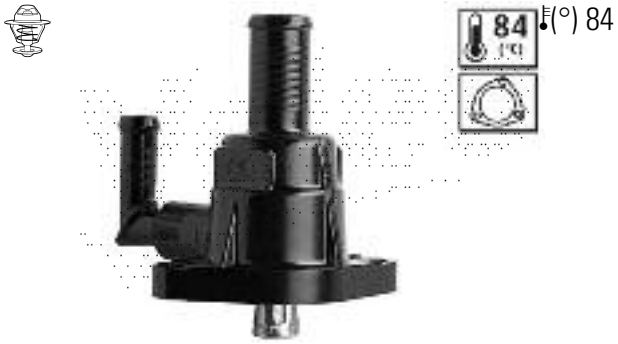

CITROËN 133846

819957 (A)- (B)27 (C)27 (D)-

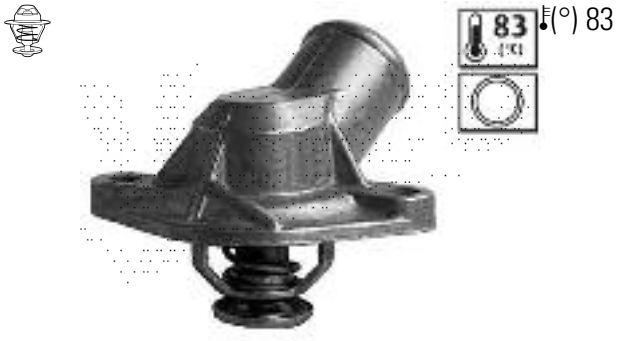

ALFA ROMEO 60516212

819958 (A)- (B)- (C)- (D)-

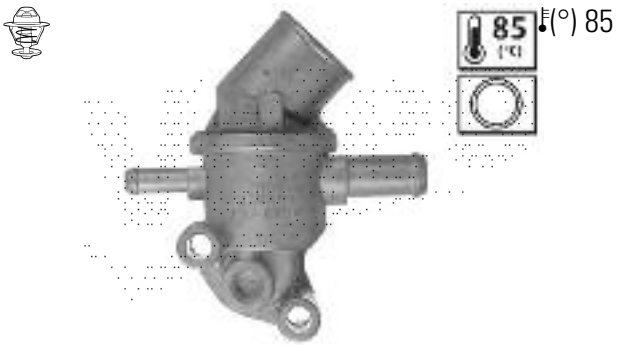

FIAT 7630978

819959 (A)- (B)- (C)- (D)-

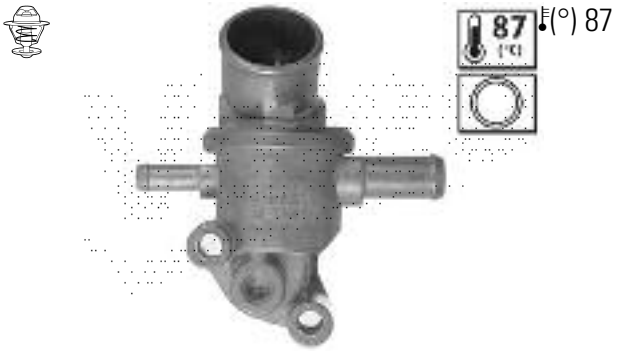

SEAT SE020032221A

819960 (A)- (B)- (C)23 (D)-

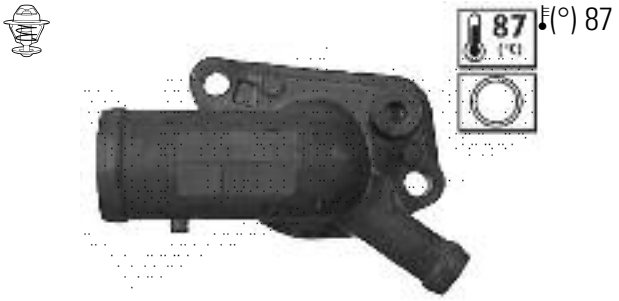

FIAT 7581201

819963 (A)- (B)- (C)- (D)-

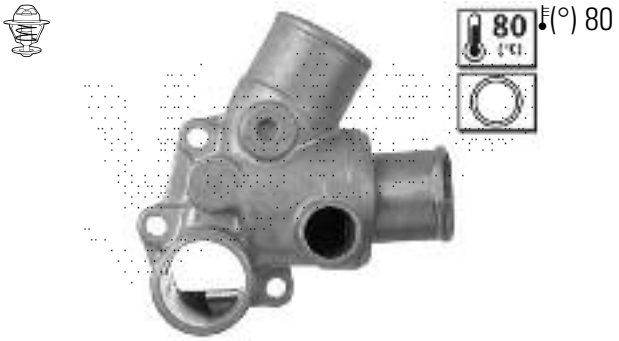

FIAT 7625346

819964 (A)- (B)- (C)- (D)-

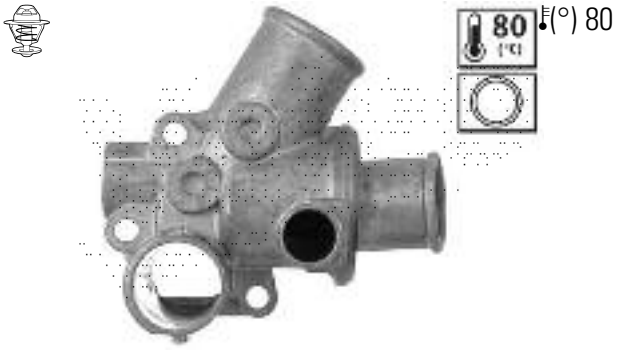

ALFA ROMEO 0060809590

819966 (A)54 (B)- (C)19 (D)-

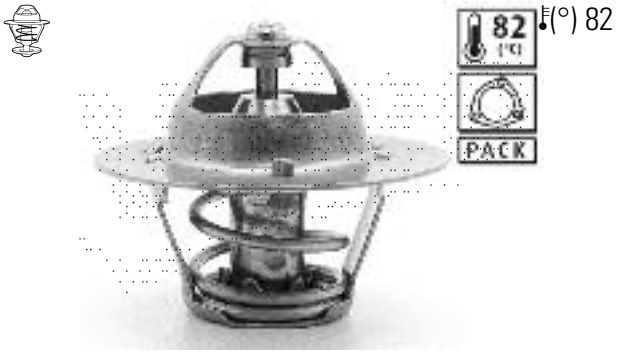

NISSAN 21200H7800

819967 (A)54 (B)- (C)19 (D)-

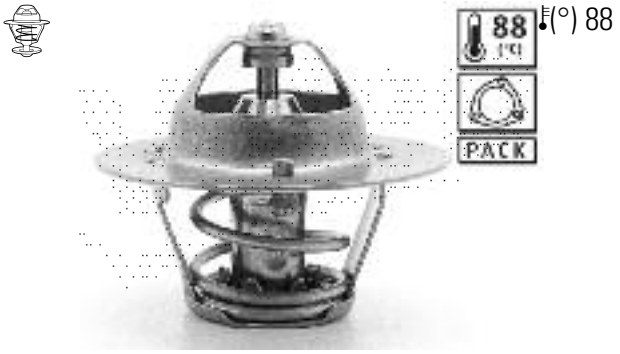

NISSAN 21200A3005

819968 (A)- (B)39 (C)33 (D)-

OPEL 1338063

819969 (A)66, 6 (B)42 (C)30, 5 (D)8, 1

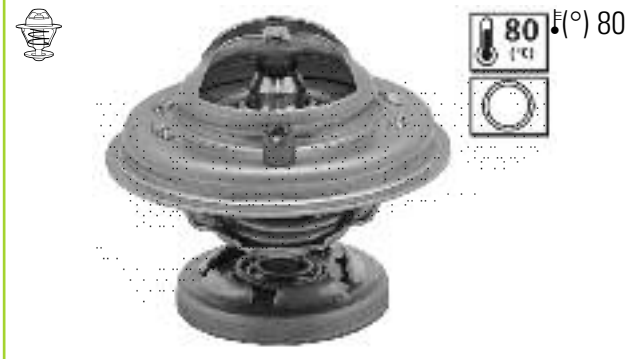

MERCEDES 6022000015

819970 (A)66, 6 (B)42 (C)30, 5 (D)8, 1

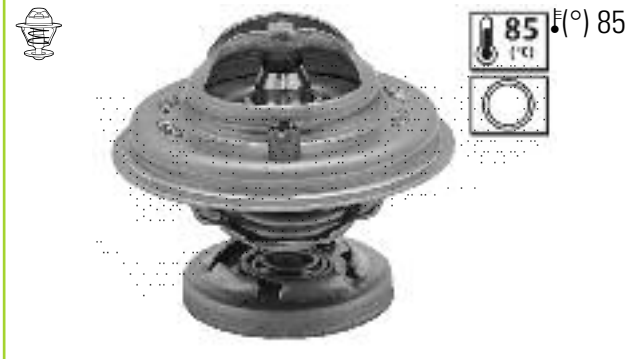

DAEWOO 6062030275

820008 (A)- (B)- (C)- (D)-

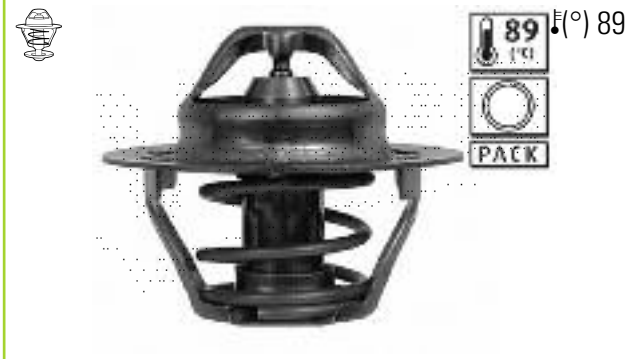

VOLVO 3473479

820009 (A)50 (B)40 (C)39 (D)24, 5

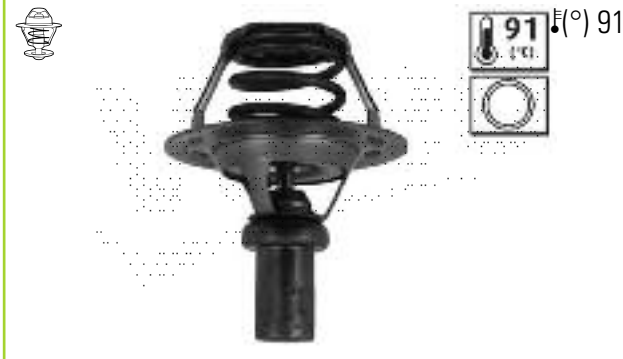

DACIA 7700858802

820010 (A)67 (B)29 (C)25, 5 (D)10, 5

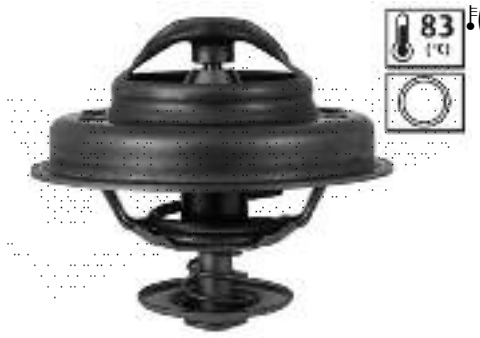

RENAULT 7700862200

820027 (A)67 (B)35 (C)25, 5 (D)7, 5

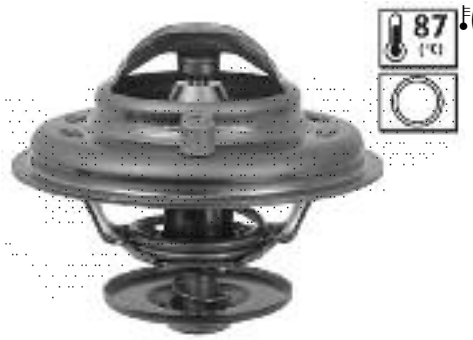

AUDI 078121113F

820021 (A)45, 5 (B)29 (C)35, 2 (D)-

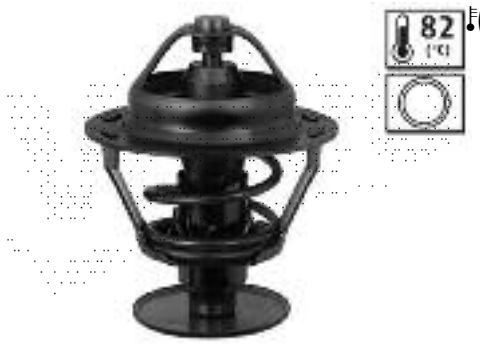

PEUGEOT 133754

820030 mm29 22X1.5

(°) (T1)95 (T2)- (T3)100 (T4)-

CITROËN 126430

820023 (A)- (B)- (C)- (D)-

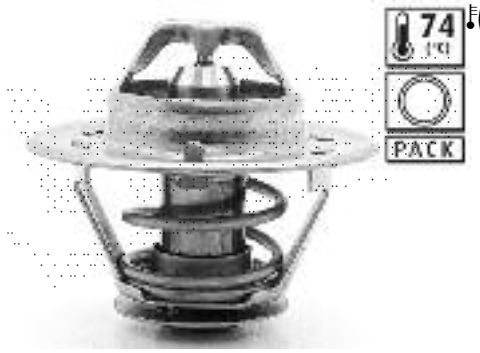

OPEL 4400106

820031 mm29 22X1.5

(°) (T1)87 (T2)92 (T3)92 (T4)97

INNOCENTI 46477717

820025 (A)50 (B)- (C)23 (D)-

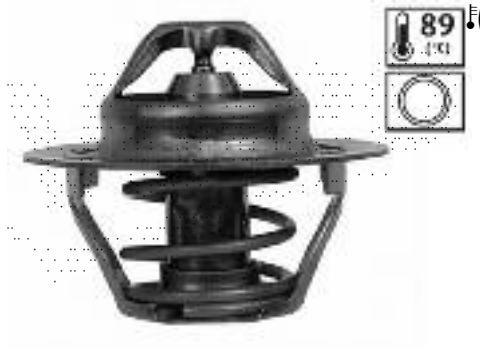

NISSAN 2120000QAA

820032 mm29 22X1.5

(°) (T1)78 (T2)82 (T3)88 (T4)92

RENAULT 7700839072

820033

mm29 COD. 22X1.5

(°) **(T1)**82 **(T2)**82 **(T3)**92 **(T4)**96

RENAULT 7700798264

820034

mm29 COD. 22X1.5

(°) **(T1)**84 **(T2)**- **(T3)**95 **(T4)**-

SEAT 867959481

820035

mm29 COD. 22X1.5

(°) **(T1)**84 **(T2)**91 **(T3)**95 **(T4)**102

VOLKSWAGEN 1J0959481A

820036

mm29 COD. 22x1.5

(°) **(T1)**95 **(T2)**105 **(T3)**100 **(T4)**110

OPEL 1341027

820037

mm29 COD. 22X1.5

(°) **(T1)**90 **(T2)**100 **(T3)**95 **(T4)**105

VAUXHALL 90355880

820038

mm29 COD. 22X1.5

(°) **(T1)**95 **(T2)**- **(T3)**100 **(T4)**-

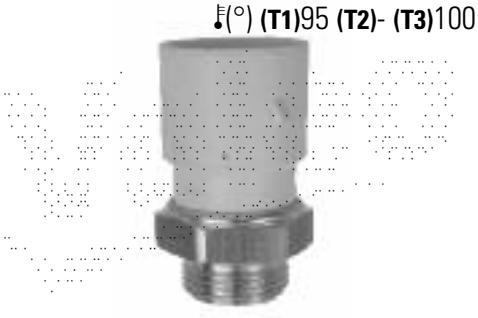

OPEL 1341023

820040

(A)54 **(B)**35 **(C)**32, 5 **(D)**-

(°) 90

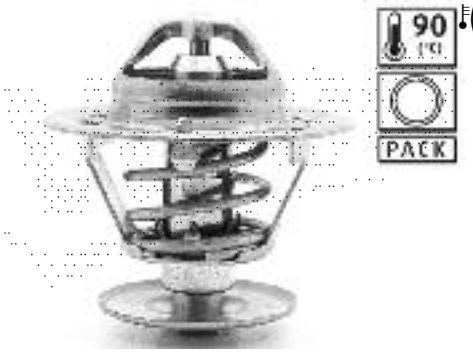

RENAULT 7439180811

820042

(A)44 **(B)**- **(C)**23 **(D)**-

(°) 88

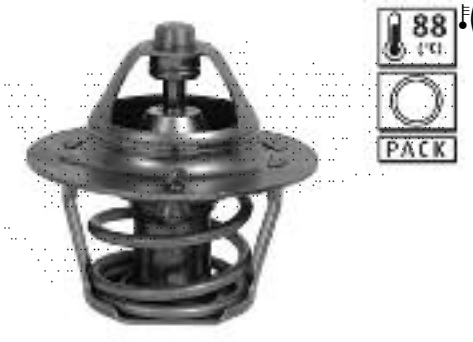

DAIHATSU 1634187793000

820043 (A)68 (B)- (C)13 (D)10, 5

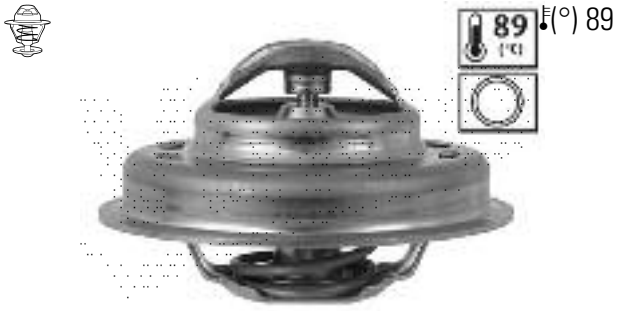

PEUGEOT 133816

820049 (A)54 (B)- (C)22, 5 (D)-

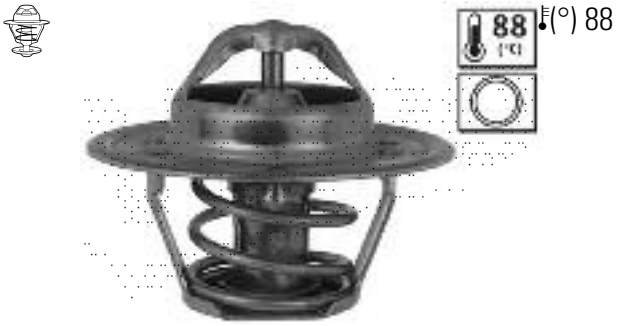

ROVER GTS1106

820044 (A)52 (B)- (C)26 (D)-

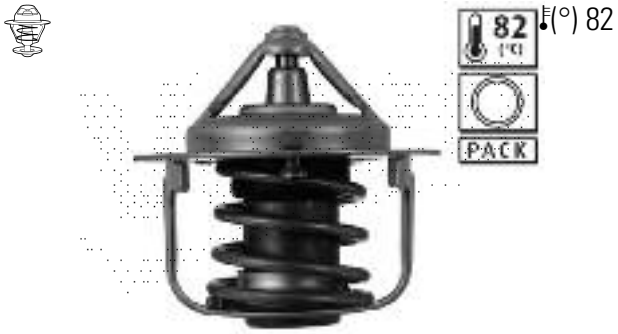

HONDA 19300PB2023

820050 (A)- (B)39 (C)33 (D)-

VAUXHALL 90486126

820047 (A)55 (B)29 (C)35, 5 (D)-

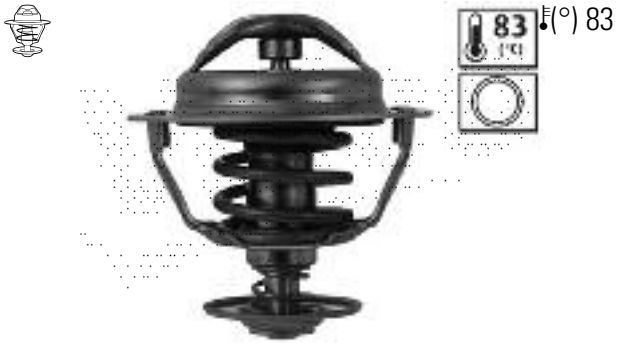

RENAULT 7700868274

820051 (A)- (B)- (C)- (D)-

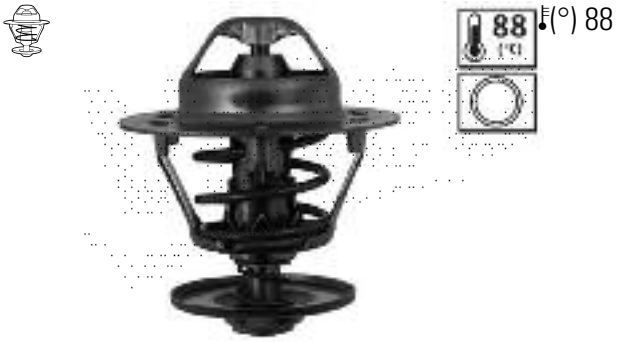

FORD 6866389

820048 (A)- (B)- (C)26 (D)-

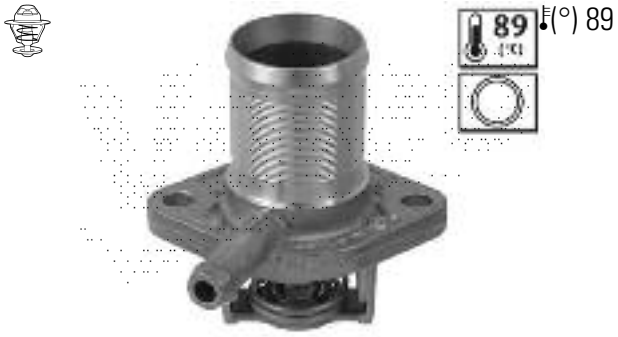

RENAULT 7700868980

820053 (A)51, 9 (B)29 (C)33 (D)-

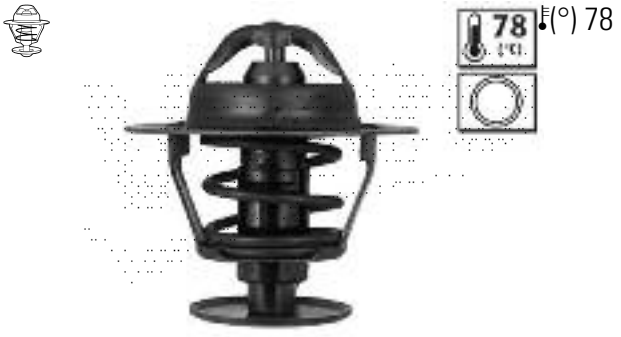

ROVER GTS285

820054 (A)51, 9 (B)29 (C)33 (D)-

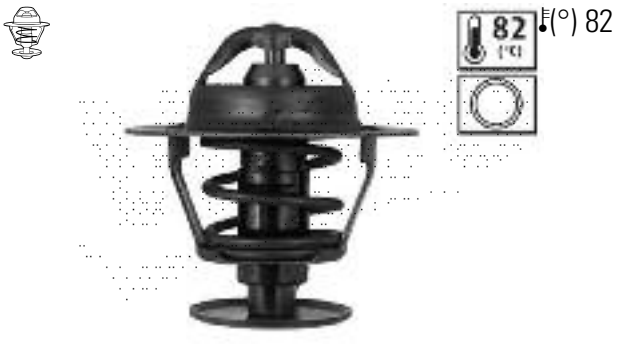

ROVER GTS275

820055 (A)- (B)- (C)- (D)-

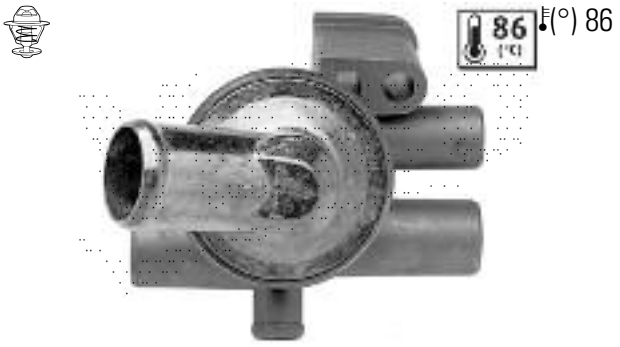

ALFA ROMEO 0060557407

820056 (A)51,9 (B)- (C)22,5 (D)-

LAND ROVER PEL10016

820057 (A)54 (B)- (C)22, 5 (D)-

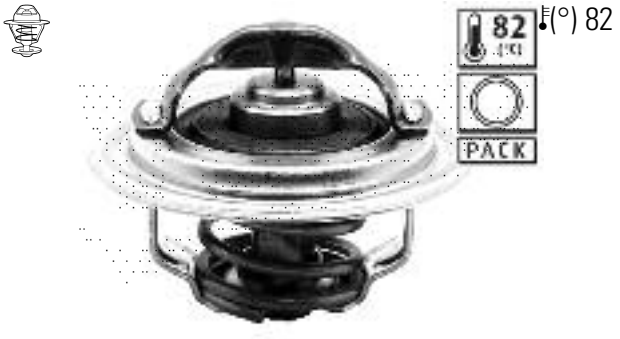

ROVER GTS282

820058 (A)54 (B)- (C)22, 5 (D)-

ROVER GTS298

820059 (A)67 (B)43 (C)25, 5 (D)7, 5

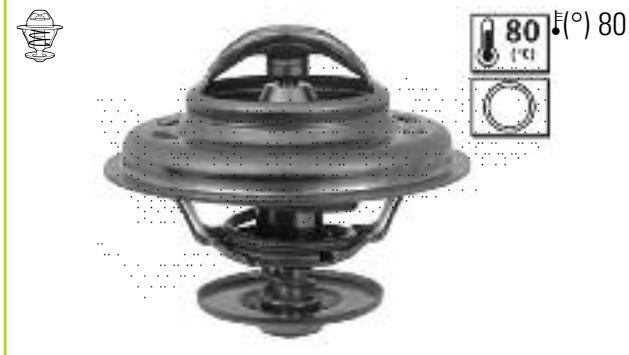

CHRYSLER 4778975

820060 (A)- (B)- (C)- (D)-

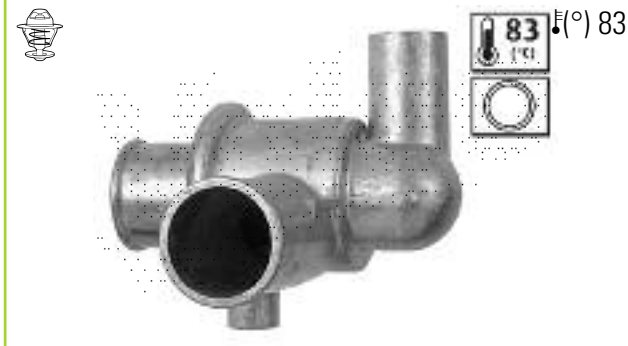

ALFA ROMEO 0060534691

820061 (A)- (B)- (C)- (D)-

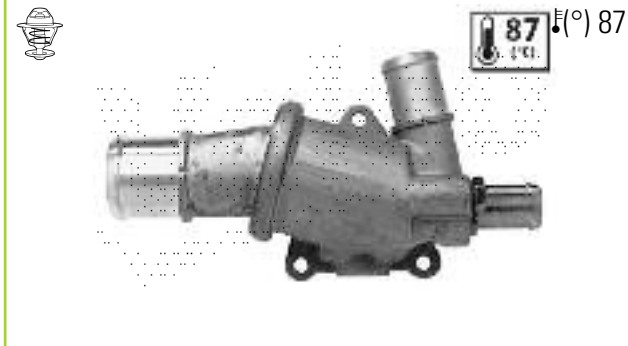

ALFA ROMEO 0060556559

820063 (A)67 (B)35 (C)25, 5 (D)7, 5

VOLKSWAGEN 069121113

820064 (A)- (B)- (C)- (D)-

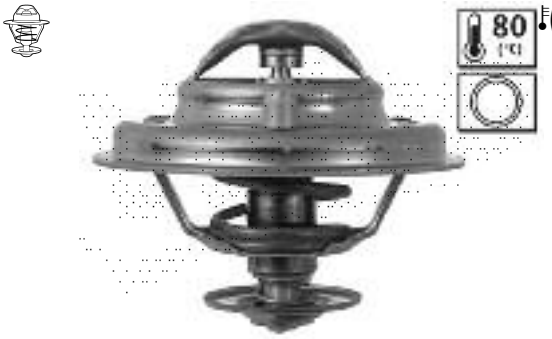

FORD 1018799

820065 (A)67 (B)29 (C)25,5 (D)7,5

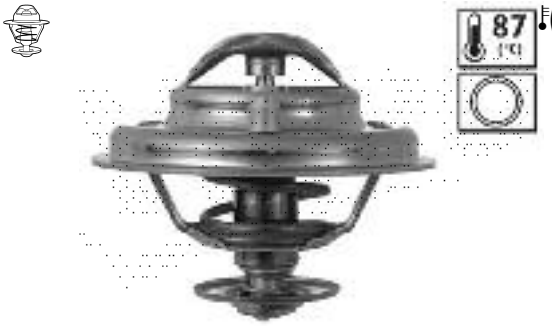

FORD 1032249

820066 (A)- (B)- (C)- (D)-

ALFA ROMEO 0060812436

820067 (A)- (B)- (C)- (D)-

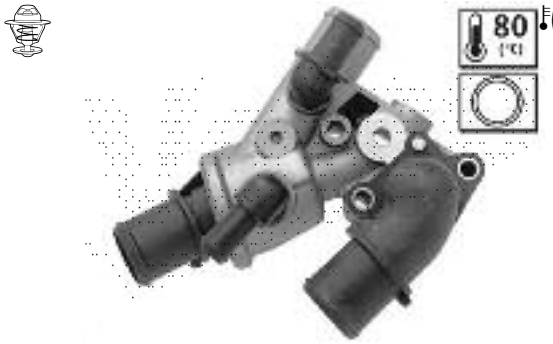

FIAT 7741883

820068 (A)51, 9 (B)- (C)22, 5 (D)-

FORD 6994257

820069 (A)53, 5 (B)29 (C)33, 5 (D)-

FORD 6542383

820070 (A)- (B)29 (C)30 (D)-

OPEL 1338062

820071 (A)- (B)29 (C)30 (D)-

(°) 92

OPEL 1338049

820072 (A)- (B)- (C)- (D)-

(°) 88

KIA 0K05415171

820073 (A)54 (B)29 (C)34 (D)-

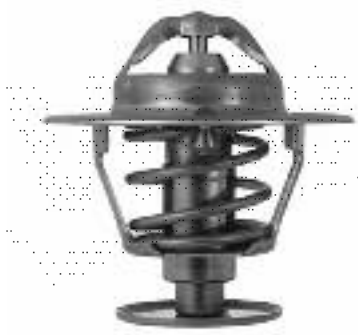

(°) 82

SAAB 8817538

820074 (A)54 (B)29 (C)34 (D)-

(°) 89

LAND ROVER ERR2803

820076 (A)52 (B)28 (C)34 (D)-

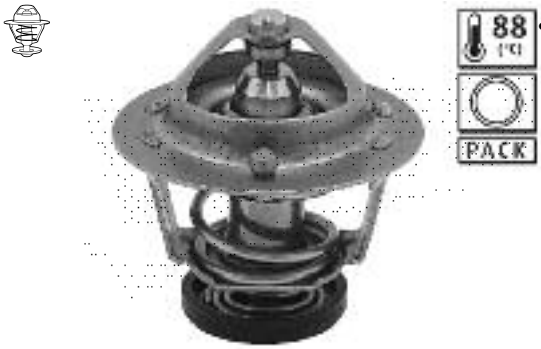

(°) 78

HONDA 19300P08003

820077 (A)48 (B)44,5 (C)21,7 (D)-

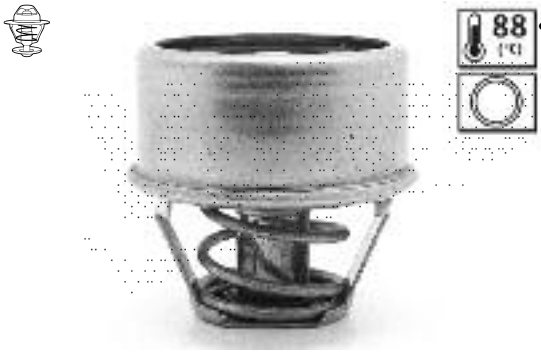

(°) 88

ROVER GTS302

820131 (A)64 (B)40, 9 (C)25 (D)-

(°) 82

PEUGEOT 133873

820132 (A)54 (B)35 (C)31 (D)-

(°) 84

VOLKSWAGEN 030121113

820134 (A)48 (B)- (C)21 (D)2, 5

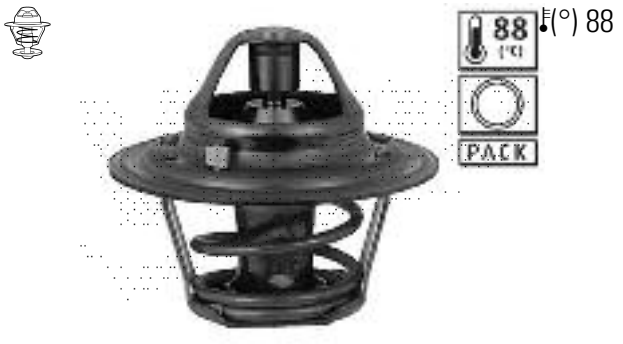

(°) 88

FORD 6201247

820135 (A)56 (B)29 (C)43 (D)-

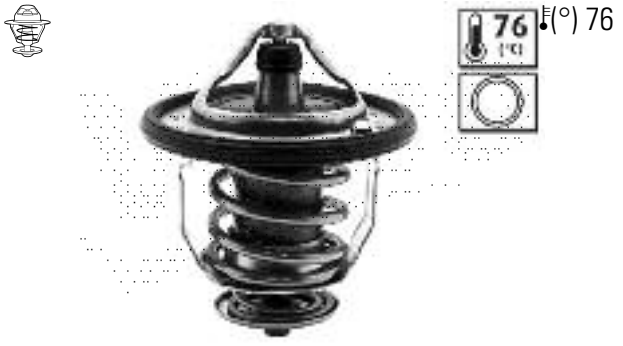

(°) 76

MITSUBISHI MD170031

820136 (A)56 (B)29 (C)43 (D)-

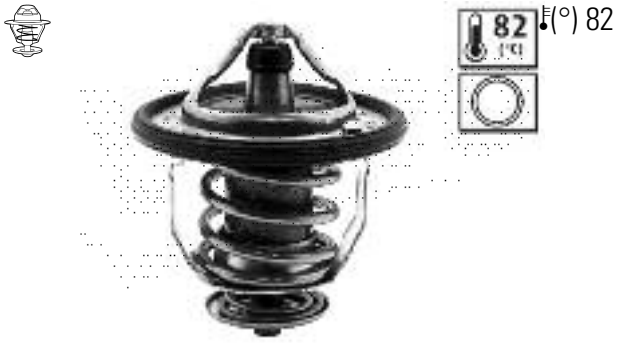

(°) 82

TOYOTA 9091603129

820137 (A)- (B)- (C)- (D)-

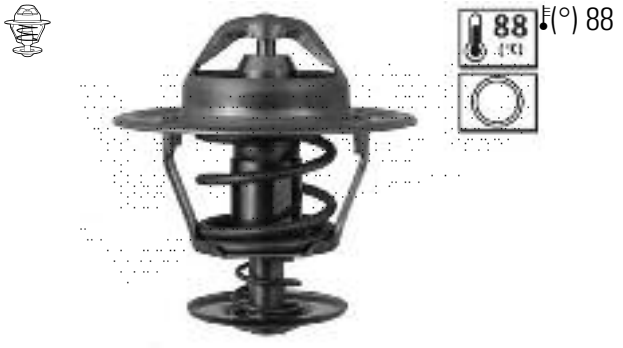

(°) 88

FORD 1658103

820138 (A)- (B)- (C)- (D)-

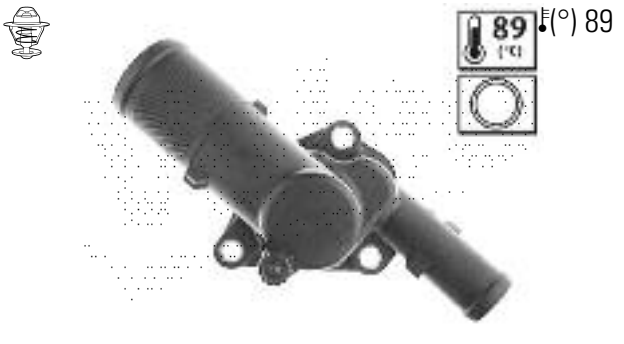

(°) 89

RENAULT 7700110716

820139 (A)- (B)29 (C)30 (D)-

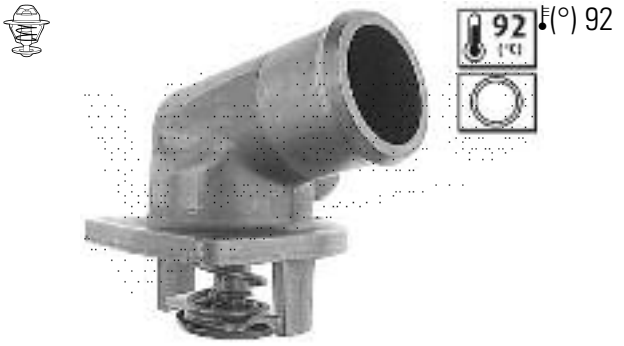

(°) 92

OPEL 1338073

820140 (A)- (B)- (C)- (D)-

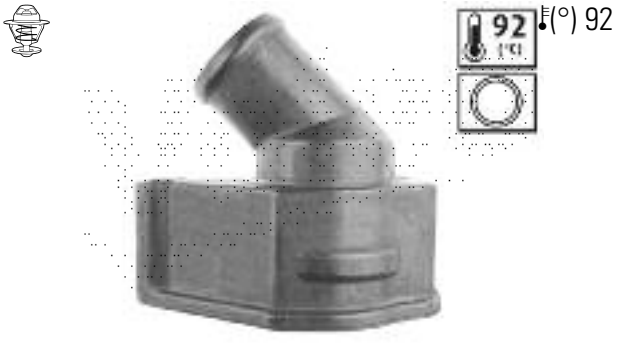

(°) 92

OPEL 1338068

820141 (A)- (B)- (C)- (D)-

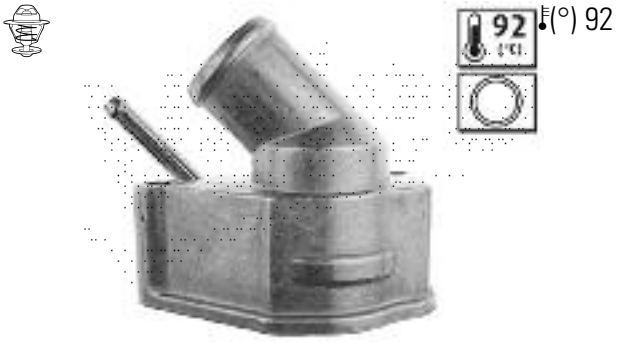

(°) 92

OPEL 1338079

820142 (A)66, 5 (B)43 (C)32 (D)8

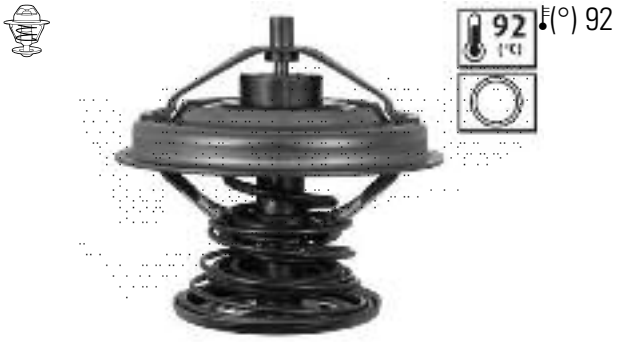

BMW 11531712043

820143 (A)67 (B)35 (C)28 (D)7, 5

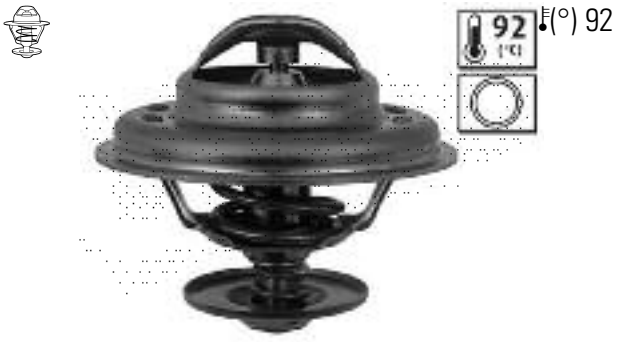

BMW 11537511083

820147 (A)- (B)43 (C)33 (D)-

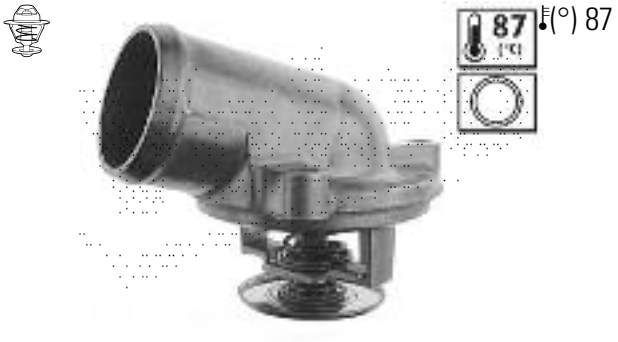

MERCEDES 1112000315

820148 (A)54 (B)35 (C)30 (D)-

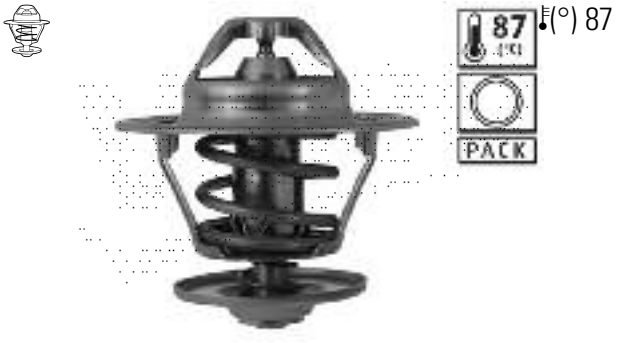

OPEL 1338033

820149 (A)- (B)30 (C)21 (D)-

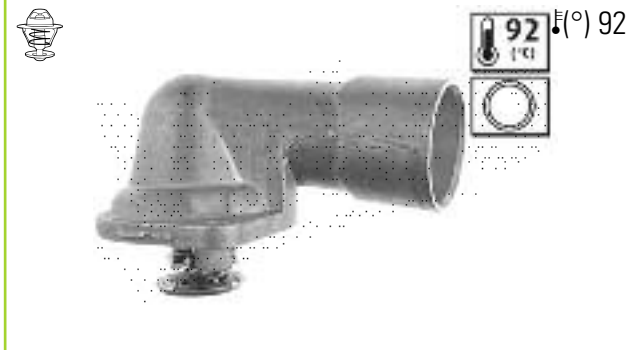

OPEL 1338084

820150 (A)- (B)- (C)15 (D)-

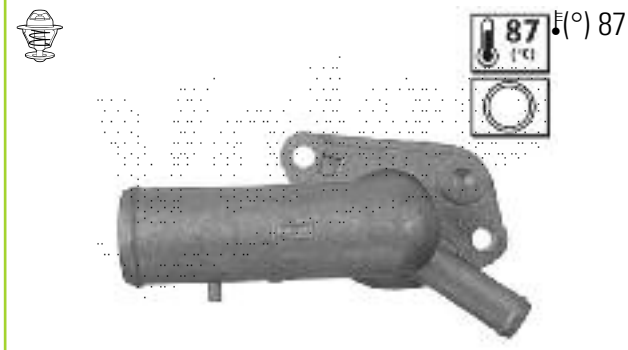

FIAT 7723325

820151 (A)- (B)- (C)- (D)-

OPEL 6338028

820152 (A)54 (B)22 (C)33 (D)-

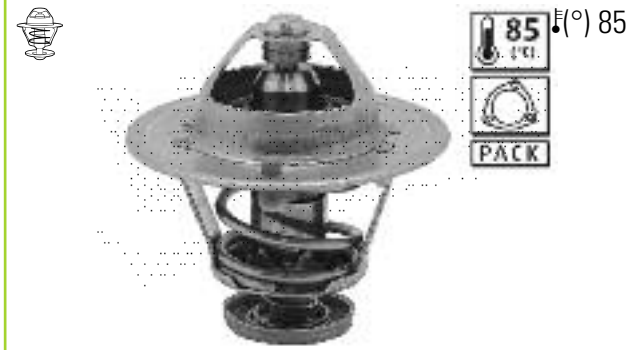

VAUXHALL 97087130

Valeo 820153 (A)- (B)- (C)- (D)-

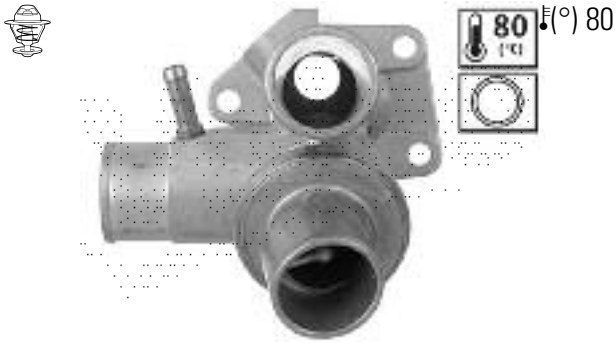

LANCIA 82390243

Valeo 820155 (A)- (B)- (C)- (D)-

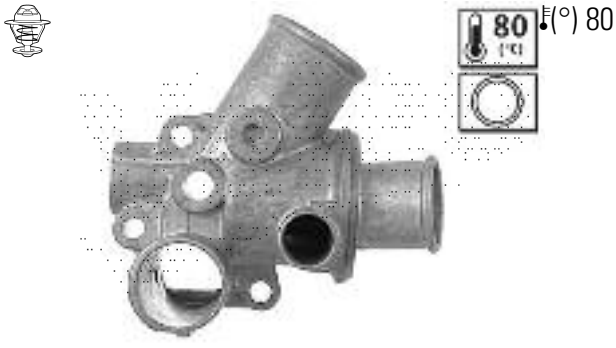

ALFA ROMEO 60812298

Valeo 820156 (A)- (B)- (C)- (D)-

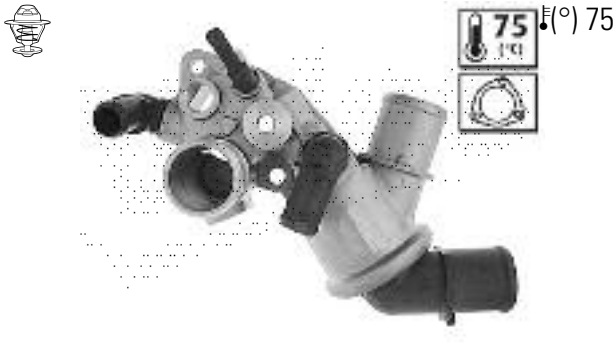

FIAT 46514953

Valeo 820157 (A)54 (B)29 (C)34, 5 (D)7, 5

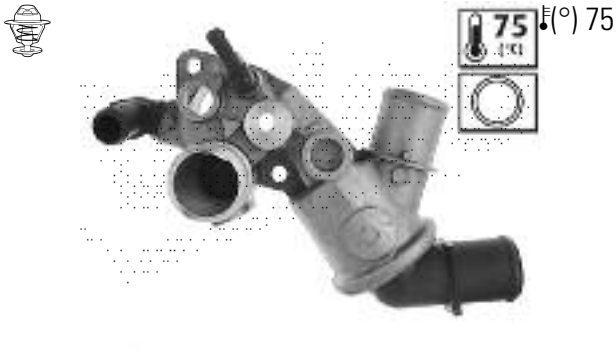

FIAT 46518600

Valeo 820158 (A)- (B)- (C)- (D)-

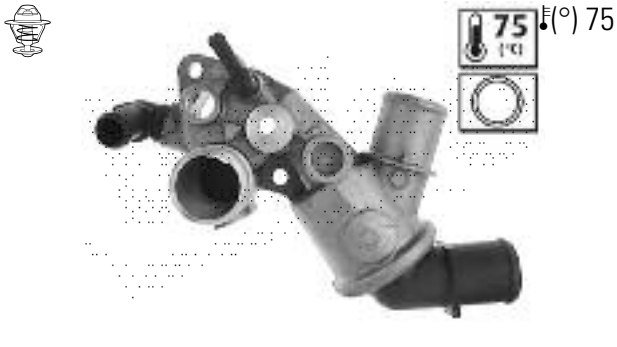

FIAT 46518601

Valeo 820159 (A)- (B)- (C)- (D)-

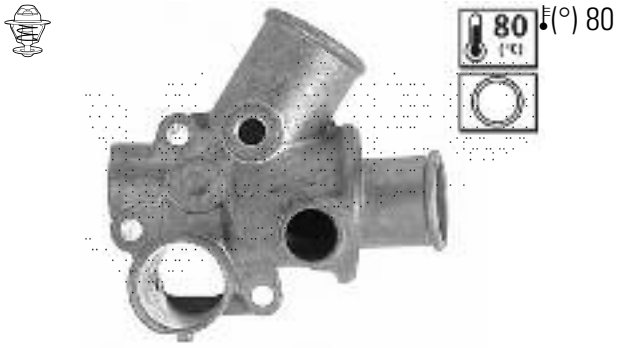

FIAT 7634348

Valeo 820160 (A)- (B)- (C)- (D)-

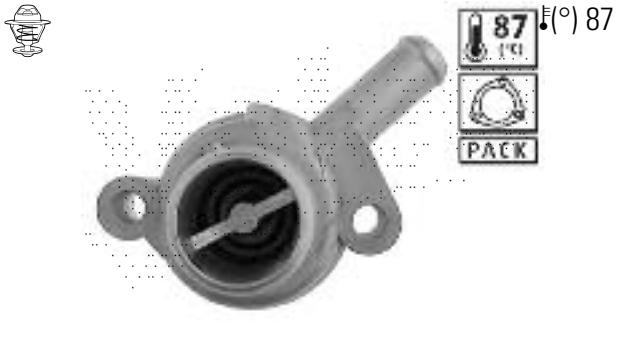

FIAT 7722107

Valeo 820161 (A)- (B)- (C)- (D)-

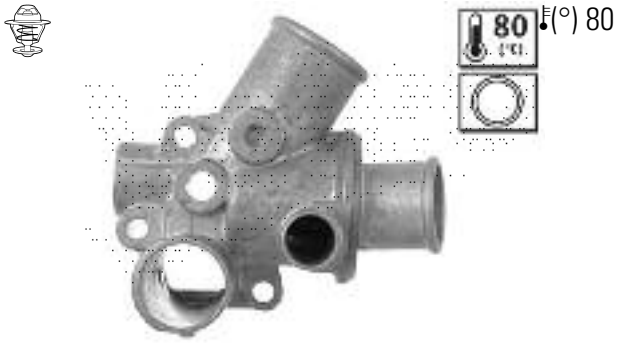

LANCIA 7729545

820162 (A)- (B)- (C)- (D)-

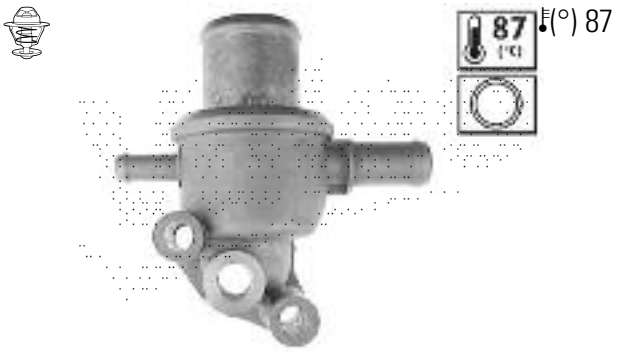

(°) 87

FIAT 7729959

820163 (A)- (B)- (C)- (D)-

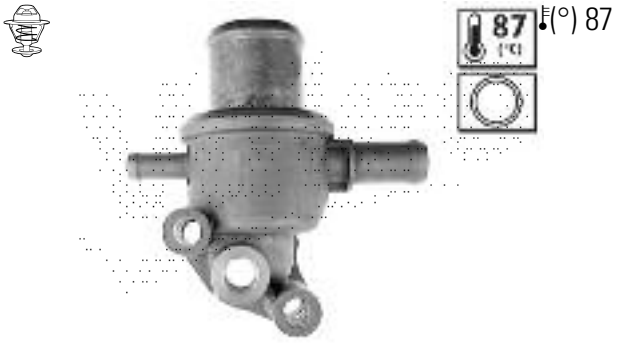

(°) 87

FIAT 7729960

820165 (A)52 (B)28 (C)33,5 (D)-

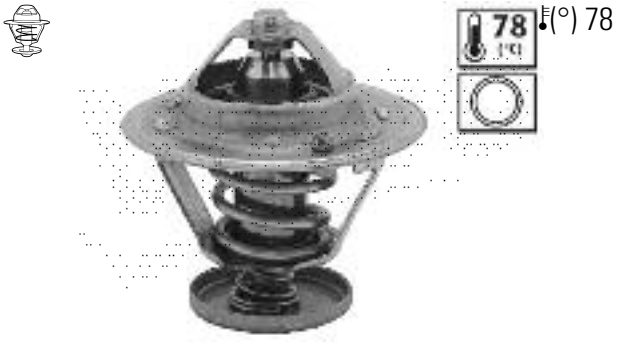

(°) 78

HONDA 19301P08305

820168 (A)54 (B)35 (C)31 (D)-

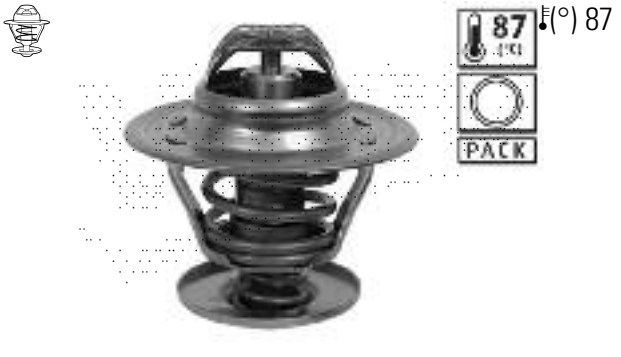

(°) 87

AUDI 044121113

820170 (A)52 (B)28 (C)35 (D)-

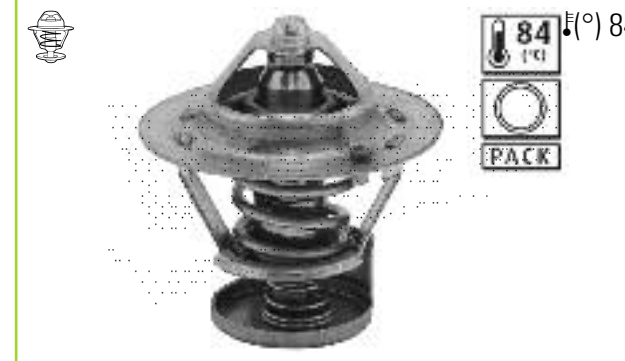

(°) 84

DAIHATSU 9004833056000

820171 (A)54 (B)- (C)23 (D)-

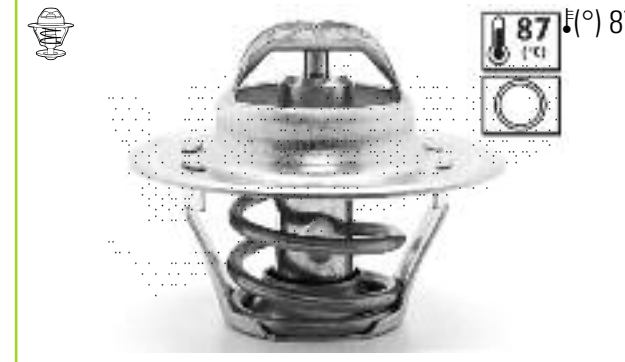

(°) 87

AUDI 050121113C

820172 (A)51, 9 (B)- (C)23 (D)-

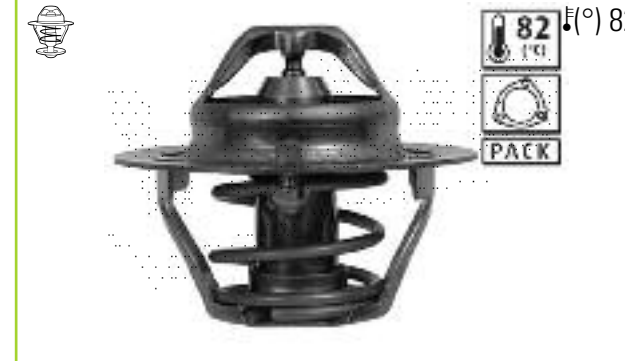

(°) 82

DAIHATSU 9091603083000

820173 (A)56 (B)29 (C)35 (D)-

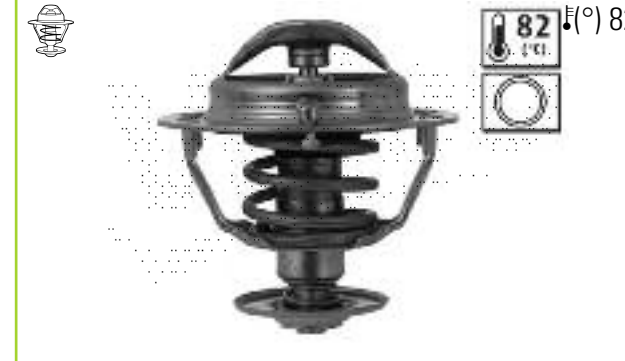

(°) 82

TOYOTA 9091603123

820174 (A)51, 9 (B)30 (C)33 (D)-

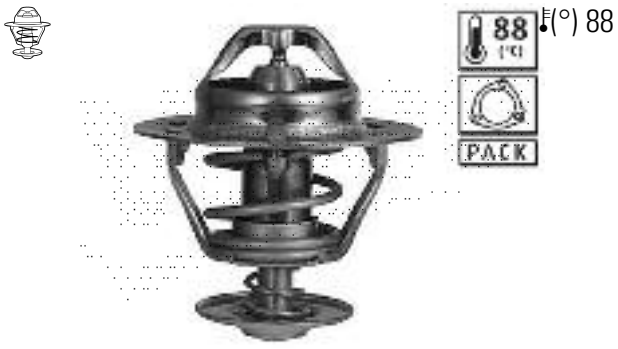

JAGUAR JDE1275

820176 (A)54, 5 (B)28 (C)31, 5 (D)-

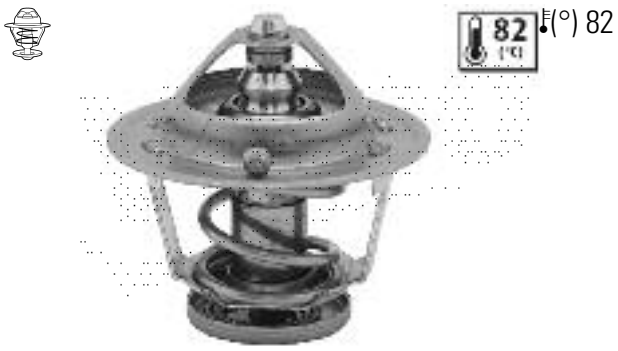

NISSAN 2120016A05

820177 (A)53, 5 (B)- (C)23 (D)-

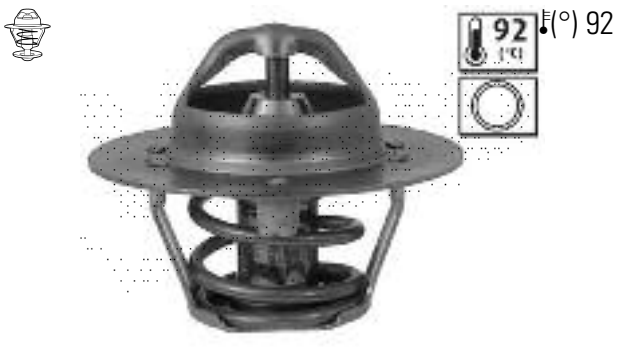

NISSAN 2120005D00

820178 (A)53,5 (B)- (C)23 (D)-

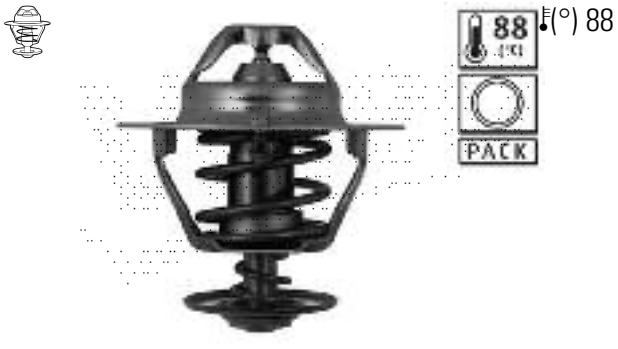

FORD 1957271

820179 (A)- (B)- (C)- (D)-

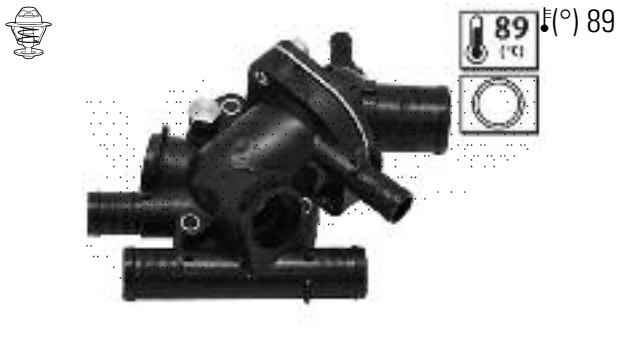

RENAULT 7701474249

820181 (A)54, 5 (B)28 (C)31, 5 (D)-

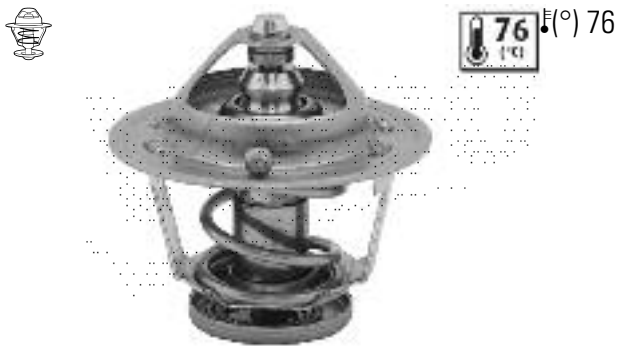

FORD 1961674

820183 (A)- (B)39 (C)33 (D)-

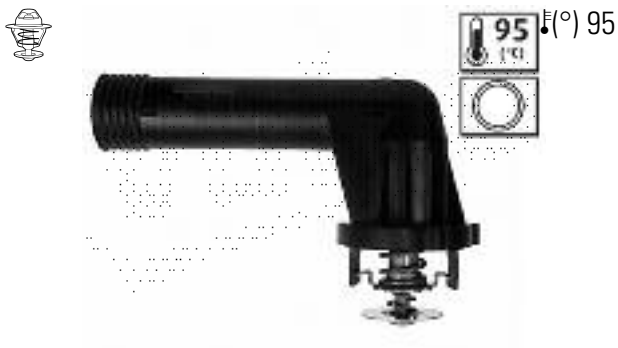

BMW 11531739755

820184 (A)- (B)43 (C)33 (D)-

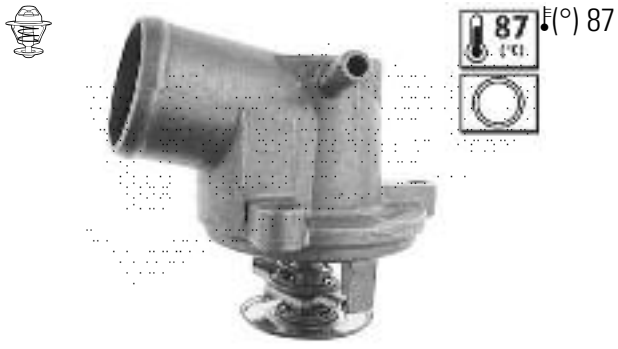

MERCEDES 1112000915

820185

(A)- **(B)**30 **(C)**- **(D)**-

92 (°C)

VAUXHALL 90352677

820191

(A)52 **(B)**- **(C)**22, 5 **(D)**-

88 (°C)

PACK

KIA KE5D315171

820192

(A)53,5 **(B)**35 **(C)**34,5 **(D)**-

82 (°C)

HYUNDAI 2550022200

820193

(A)53, 5 **(B)**29 **(C)**33 **(D)**-

82 (°C)

PACK

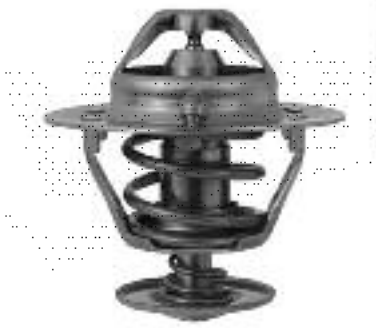

HYUNDAI 2550023010

820194

(A)56 **(B)**28 **(C)**43, 5 **(D)**-

76 (°C)

NISSAN 2120057J10

820195

(A)52 **(B)**29 **(C)**35 **(D)**-

78 (°C)

HONDA 19301P1K307

820196

(A)64 **(B)**30 **(C)**43 **(D)**-

78 (°C)

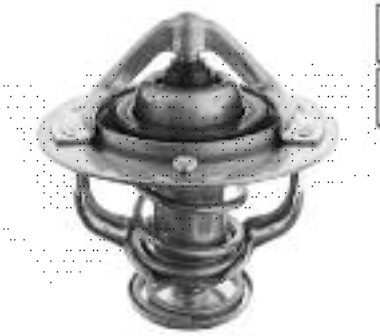

HONDA 19301RBD305

820202

(°) **(T1)**- **(T2)**- **(T3)**- **(T4)**-

SEAT SE021952600A

820205

COD. 14X1.5

(°) **(T1)**95 **(T2)**- **(T3)**100 **(T4)**-

BMW 61311364273

820206

mm29 COD. 22X1.5

(°) **(T1)**95 **(T2)**- **(T3)**100 **(T4)**-

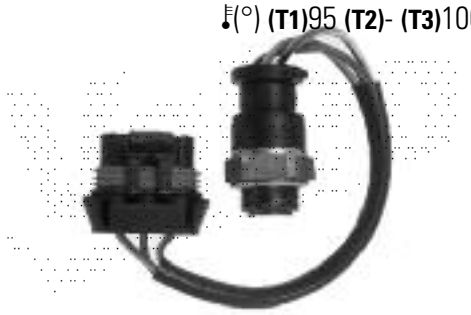

OPEL 1341012

820207

COD. 14X1.5

(°) **(T1)**95 **(T2)**- **(T3)**100 **(T4)**-

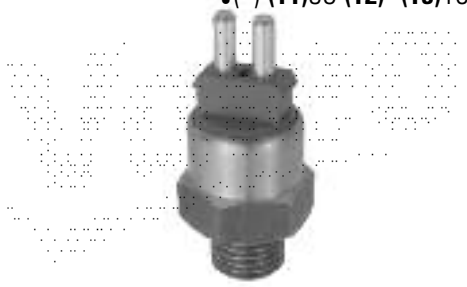

MERCEDES 0065451524

820208

mm29 COD. 22X1.5

(°) **(T1)**110 **(T2)**- **(T3)**115 **(T4)**0

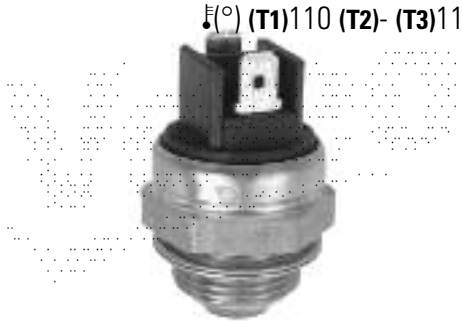

SAAB 4086682

820210

mm29 COD. 22X1.5

(°) **(T1)**105 **(T2)**- **(T3)**110 **(T4)**-

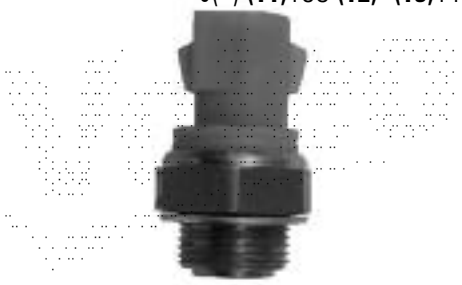

FORD 7001610

820211

mm29 COD. 22X1.5

(°) **(T1)**112 **(T2)**- **(T3)**119 **(T4)**-

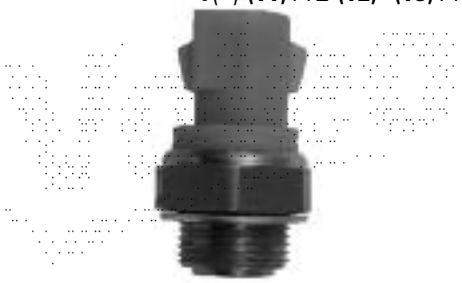

FORD 6489740

820212

mm29 COD. 22X1.5

(°) **(T1)**92 **(T2)**- **(T3)**97 **(T4)**-

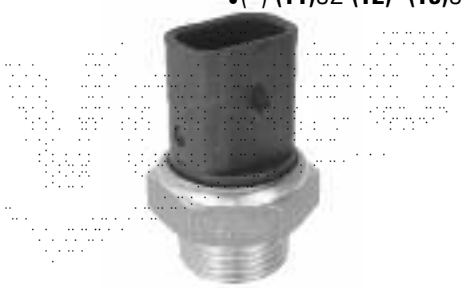

OPEL 1341021

820213

mm29 COD. 22X1.5

(°) **(T1)**90 **(T2)**95 **(T3)**95 **(T4)**100

FORD 7001607

820214

mm29 COD. 22X1.5

(°) **(T1)**95 **(T2)**105 **(T3)**100 **(T4)**110

FORD 7001605

820215

mm29 COD. 22X1.5

(°) **(T1)**82 **(T2)**95 **(T3)**92 **(T4)**100

RENAULT 7700809773

820219

mm29 COD. 22X1.5

(°) **(T1)**90 **(T2)**100 **(T3)**95 **(T4)**105

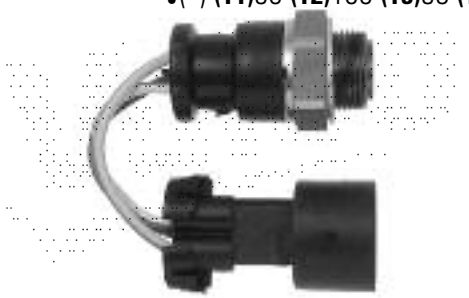

OPEL 1341024

820220

COD. 14X1.5

(°) **(T1)**85 **(T2)**93 **(T3)**90 **(T4)**98

BMW 61311378073

820222

COD. 14X1.5

(°) **(T1)**100 **(T2)**105 **(T3)**105 **(T4)**115

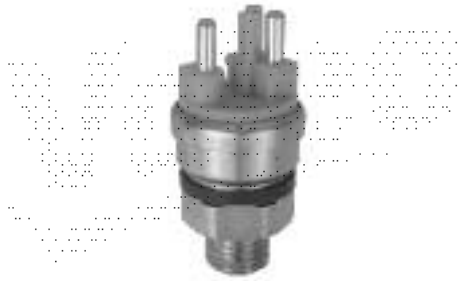

MERCEDES 0065454524

820224

mm29 COD. 22x1.5

(°) **(T1)**76 **(T2)**82 **(T3)**87 **(T4)**93

VOLKSWAGEN 701959481

820225

mm29 COD. 22X1.5

(°) **(T1)**79 **(T2)**85 **(T3)**90 **(T4)**97

VOLKSWAGEN 1H0959481C

820227

mm29 COD. 22x1.5

(°) **(T1)**115 **(T2)**100 **(T3)**120 **(T4)**105

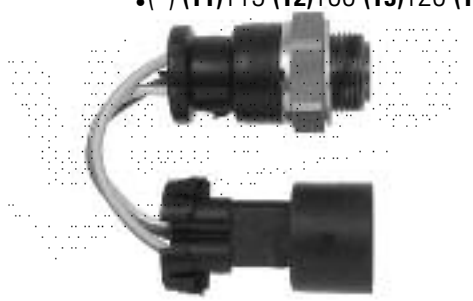

OPEL 1846201

820229

mm29 COD. 22X1.5

(°) **(T1)**79 **(T2)**85 **(T3)**87 **(T4)**93

AUDI 251959481K

820232

mm29 COD. 22X1.5

(°) **(T1)**83 **(T2)**87 **(T3)**88 **(T4)**92

FIAT 7576327

820233

COD. 16X1.5

(°) **(T1)**85 **(T2)**- **(T3)**- **(T4)**95

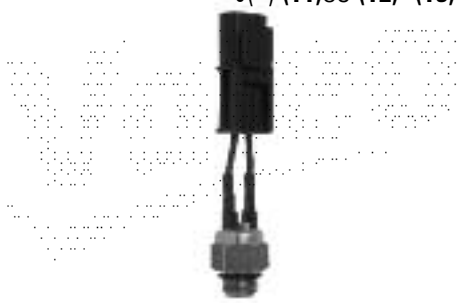

NISSAN 2159563A01

820235

COD. 16X1.5

(°) **(T1)**92 **(T2)**- **(T3)**97 **(T4)**-

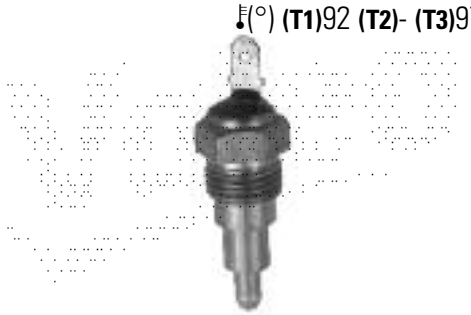

MAZDA E30118840A

820236

COD. 16X1.5

(°) **(T1)**85 **(T2)**- **(T3)**90 **(T4)**-

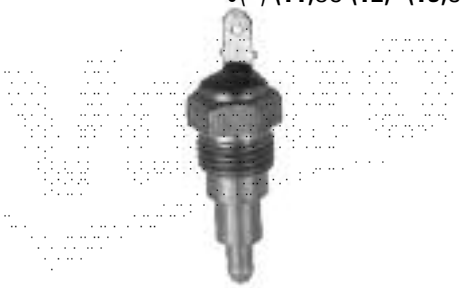

MAZDA E50818840A

820237

COD. 16X1.5

(°) **(T1)**85 **(T2)**- **(T3)**90 **(T4)**-

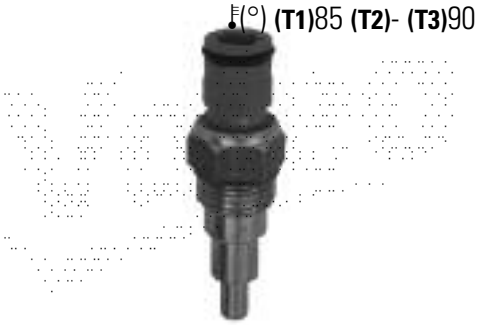

TOYOTA 8942832010

820238

COD. 16X1.5

(°) **(T1)**87 **(T2)**- **(T3)**92 **(T4)**-

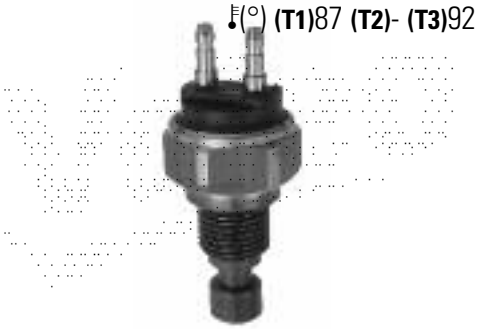

HONDA 37760PB2003

820239

COD. 16X1.5

(°) **(T1)**83 **(T2)**- **(T3)**- **(T4)**90

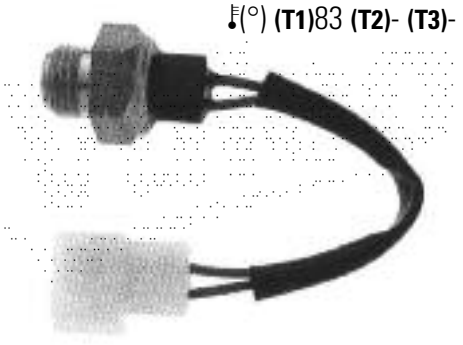

NISSAN 2159503B60

820240

COD. 16X1.5

(°) **(T1)**85 **(T2)**- **(T3)**90 **(T4)**-

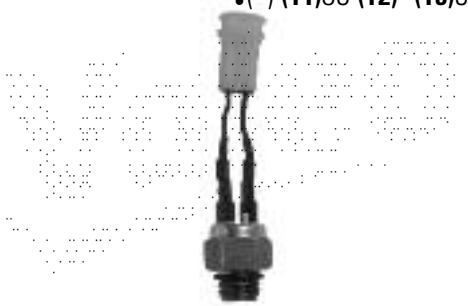

NISSAN 2159501A00

820241

mm21 COD. 22X1.5

(°) **(T1)**100 **(T2)**95 **(T3)**105 **(T4)**100

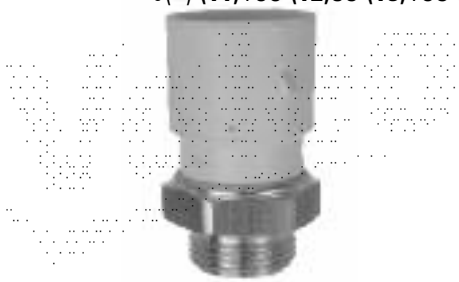

OPEL 1341042

820242

mm29 COD. 22X1.5

(°) **(T1)**82 **(T2)**- **(T3)**87 **(T4)**-

FIAT 1307077080

820245

(A)54 **(B)**35 **(C)**31 **(D)**-

(°) 82

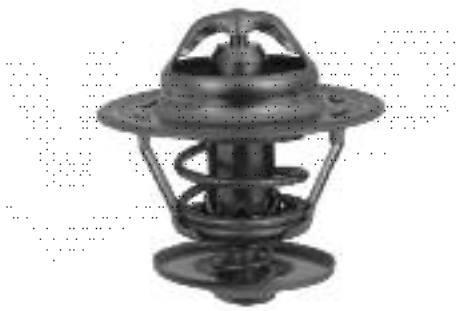

SEAT 037121113

820258

(A)- **(B)**- **(C)**- **(D)**-

82 °C

(°) 82

OPEL 1338080

820259

COD. 14X1.5

(°) **(T1)**90 **(T2)**- **(T3)**97 **(T4)**-

BMW 61311364272

820262

(A)48 **(B)**- **(C)**22,5 **(D)**-

87 °C

(°) 87

DAEWOO 96143939

820290

(A)54 **(B)**- **(C)**22, 5 **(D)**-

92 °C

PACK

(°) 92

FORD 1472378

820301

COD. 16X1.5

(°) (T1)80 (T2)- (T3)85 (T4)-

MITSUBISHI MB845063

820302

mm29 COD. 22X1.5

(°) (T1)90 (T2)- (T3)95 (T4)-

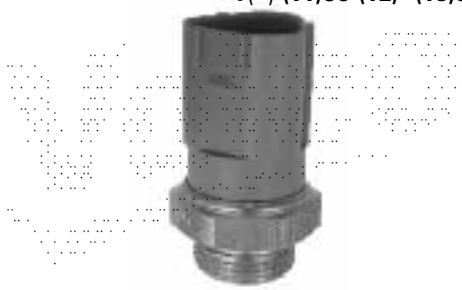

VOLKSWAGEN 1J0959481

820303

mm29 COD. 22X1.5

(°) (T1)75 (T2)82 (T3)80 (T4)87

VOLKSWAGEN 701959481C

820304

mm29 COD. 22X1.5

(°) (T1)90 (T2)- (T3)95 (T4)-

AUDI 893959481

820305

mm21 COD. 22X1.5

(°) (T1)90 (T2)97 (T3)95 (T4)102

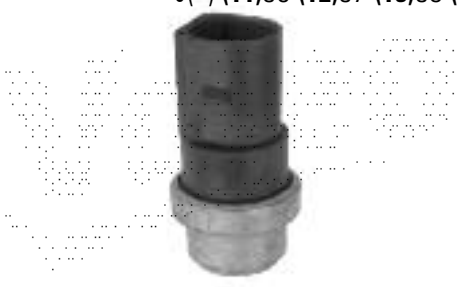

VOLKSWAGEN 8D0959481B

820307

mm29 COD. 22X1.5

(°) (T1)95 (T2)105 (T3)100 (T4)110

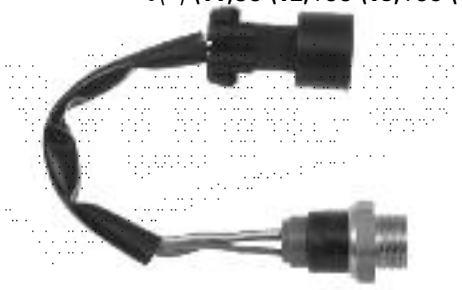

OPEL 1341022

820308

mm29 COD. 22X1.5

(°) (T1)82 (T2)90 (T3)87 (T4)95

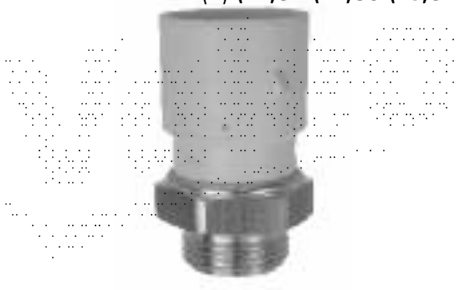

OPEL 1341033

820309

mm29 COD. 22X1.5

(°) (T1)95 (T2)105 (T3)100 (T4)110

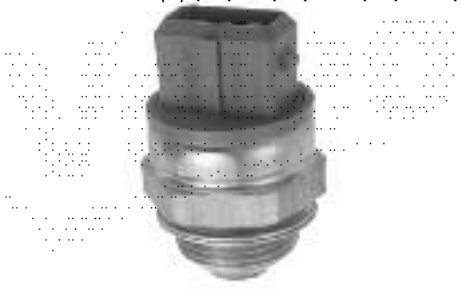

OPEL 1341036

820310

mm29 COD. 22X1.5

(°) **(T1)**100 **(T2)**105 **(T3)**105 **(T4)**110

OPEL 1341041

820311

mm29 COD. 22X1.5

(°) **(T1)**100 **(T2)**115 **(T3)**105 **(T4)**120

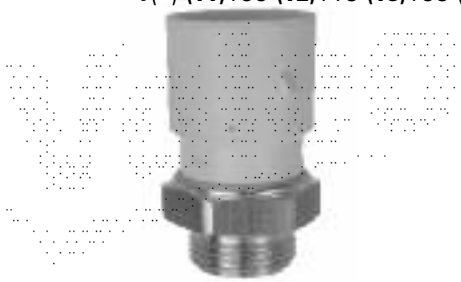

OPEL 1846325

820312

mm29 COD. 22X1.5

(°) **(T1)**100 **(T2)**110 **(T3)**105 **(T4)**115

OPEL 1341037

820314

mm29 COD. 22X1.5

(°) **(T1)**92 **(T2)**97 **(T3)**97 **(T4)**102

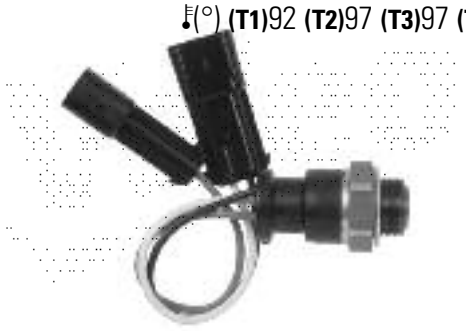

AUTOBIANCHI 7558930

820315

mm29 COD. 22X1.5

(°) **(T1)**87 **(T2)**92 **(T3)**92 **(T4)**97

FIAT 7596228

820316

COD. 14X1.5

(°) **(T1)**91 **(T2)**- **(T3)**99 **(T4)**0

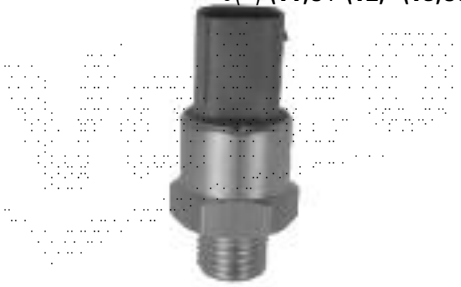

BMW 61318363677

820317

COD. 14X1.5

(°) **(T1)**91 **(T2)**- **(T3)**104 **(T4)**-

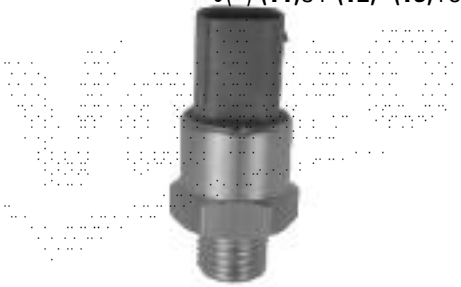

BMW 61318360857

820318

COD. 14X1.5

(°) **(T1)**80 **(T2)**- **(T3)**99 **(T4)**-

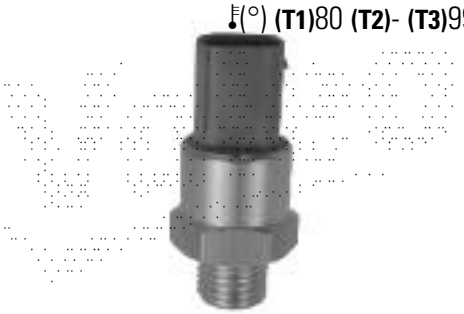

BMW 61318386135

820319

COD. 14X1.5

(°) **(T1)**80 **(T2)**- **(T3)**88 **(T4)**-

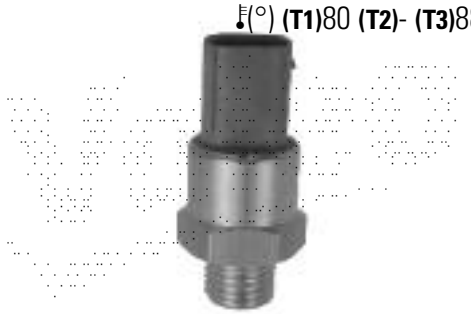

BMW 61318376440

820329

COD. 16X1.5

(°) **(T1)**95 **(T2)**- **(T3)**100 **(T4)**-

SUBARU 1768050F10

820324

mm**21** COD. **22X1.5**

(°) **(T1)**95 **(T2)**105 **(T3)**100 **(T4)**110

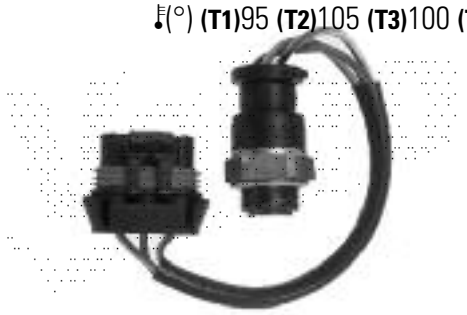

OPEL 1341020

820330

COD. 16X1.5

(°) **(T1)**87 **(T2)**- **(T3)**92 **(T4)**-

HONDA 37773PH1621

820325

COD. 16X1.5

(°) **(T1)**85 **(T2)**- **(T3)**90 **(T4)**-

TOYOTA 8942815030

820331

COD. 16X1.5

(°) **(T1)**80 **(T2)**- **(T3)**85 **(T4)**-

TOYOTA 8942810100

820326

COD. 16X1.5

(°) **(T1)**85 **(T2)**- **(T3)**90 **(T4)**-

TOYOTA 8942820060

820332

COD. 16X1.5

(°) **(T1)**92 **(T2)**- **(T3)**97 **(T4)**-

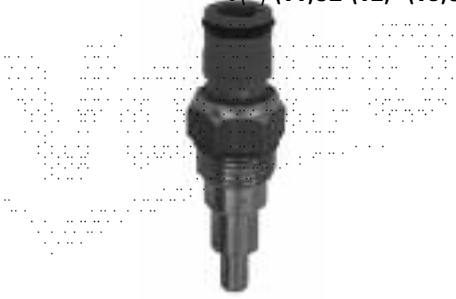

TOYOTA 8942810050

Valeo 820333

COD. 16X1.5

(°) **(T1)**87 **(T2)**- **(T3)**97 **(T4)**-

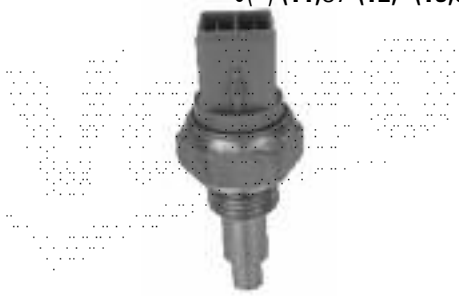

HONDA 37773PB1003

Valeo 820334

COD. 18X1.5

(°) **(T1)**90 **(T2)**- **(T3)**95 **(T4)**-

HONDA 37760P00004

Valeo 820335

COD. 18X1.5

(°) **(T1)**107 **(T2)**- **(T3)**112 **(T4)**-

HONDA 37773PT3A01

Valeo 820336

COD. 16X1.5

(°) **(T1)**80 **(T2)**- **(T3)**85 **(T4)**-

HYUNDAI 2536037100

Valeo 820337

mm21 COD. 16X1.5

(°) **(T1)**85 **(T2)**- **(T3)**90 **(T4)**-

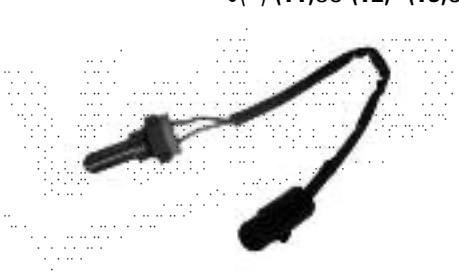

HYUNDAI 2536033010

Valeo 820338

COD. 16X1.5

(°) **(T1)**87 **(T2)**- **(T3)**92 **(T4)**-

TOYOTA 8942812160

Valeo 820401

(A)- (B)- (C)- (D)-

(°) 83

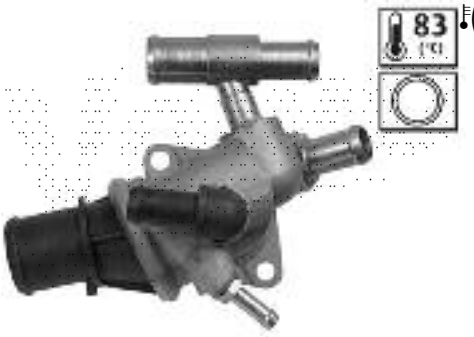

ALFA ROMEO 0060602148

Valeo 820402

(A)- (B)- (C)- (D)-

(°) 88

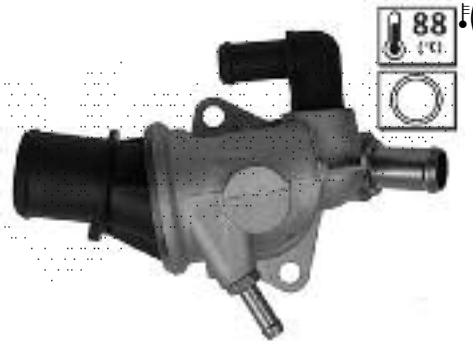

ALFA ROMEO 0060653946

Valeo 820403 (A)- (B)- (C)- (D)-

ALFA ROMEO 0060812437

Valeo 820404 (A)- (B)- (C)- (D)-

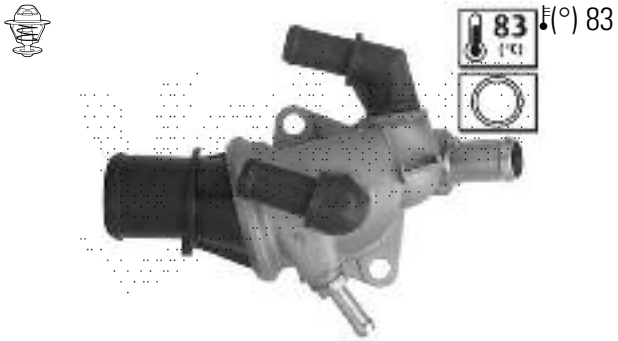

ALFA ROMEO 0060614140

Valeo 820406 (A)- (B)- (C)- (D)-

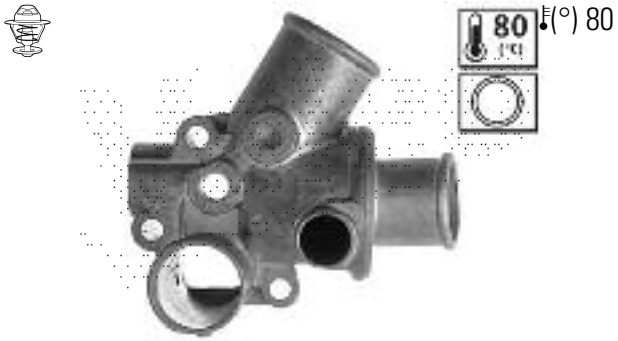

ALFA ROMEO 0060808795

Valeo 820407 (A)- (B)- (C)- (D)-

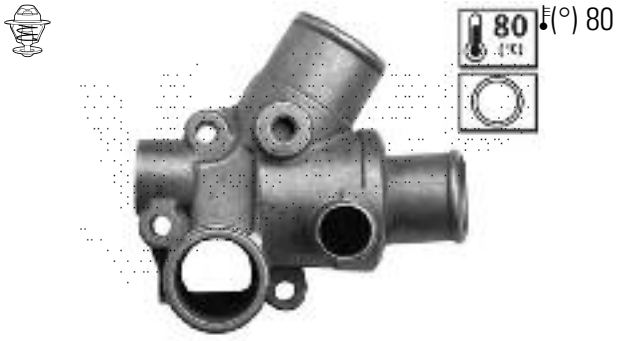

ALFA ROMEO 60812296

Valeo 820410 (A)- (B)- (C)- (D)-

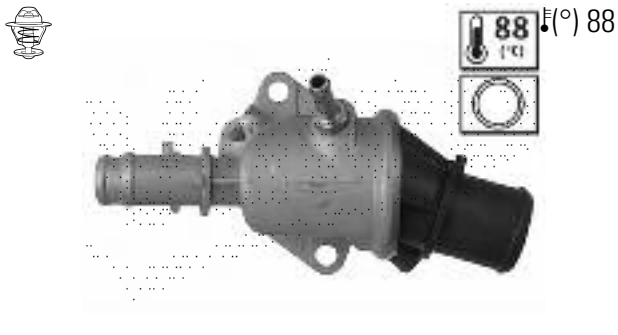

ALFA ROMEO 46527105

Valeo 820411 (A)- (B)- (C)- (D)-

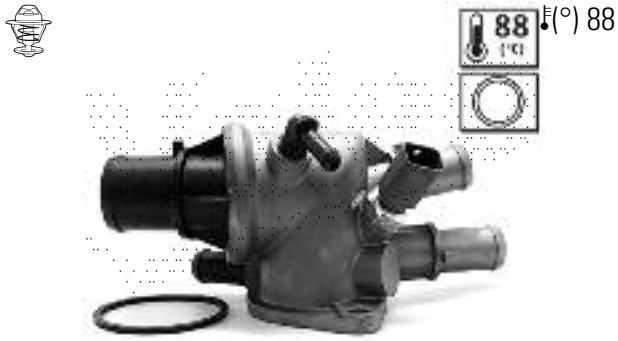

ALFA ROMEO 60815681

Valeo 820412 (A)- (B)- (C)- (D)-

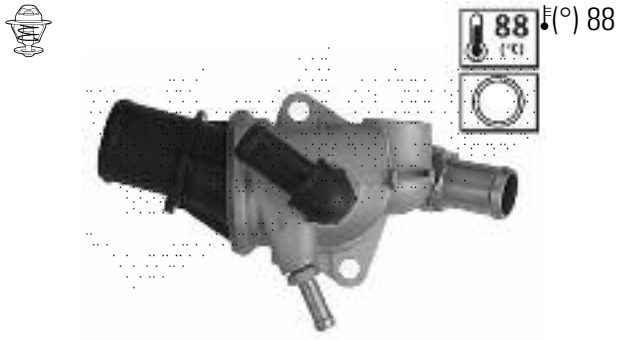

ALFA ROMEO 60609026

Valeo 820414 (A)67 (B)35 (C)25 (D)8

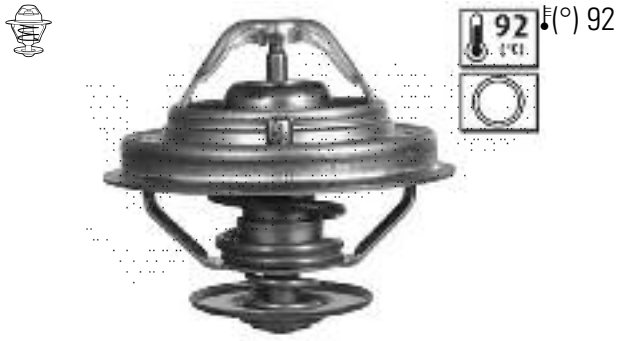

AUDI 078121113G

Valeo 820415 (A)67 (B)35 (C)25 (D)8

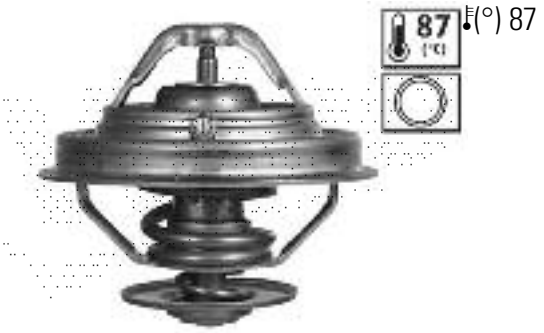

(°) 87

AUDI 077121113B

Valeo 820422 (A)- (B)43 (C)38 (D)-

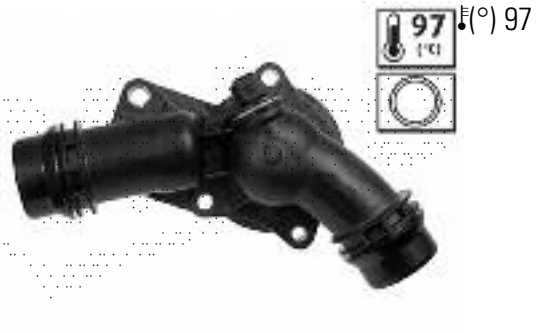

(°) 97

BMW 11531437040

Valeo 820418 (A)- (B)43 (C)33 (D)-

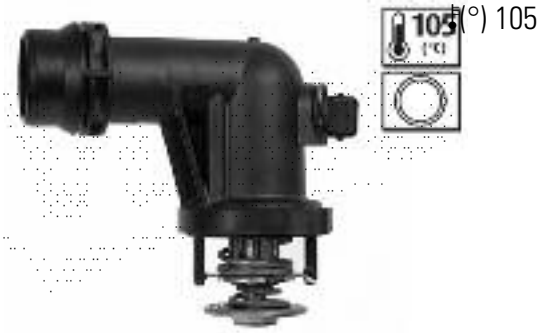

(°) 105

BMW 11531437085

Valeo 820423 (A)83 (B)43 (C)34 (D)7

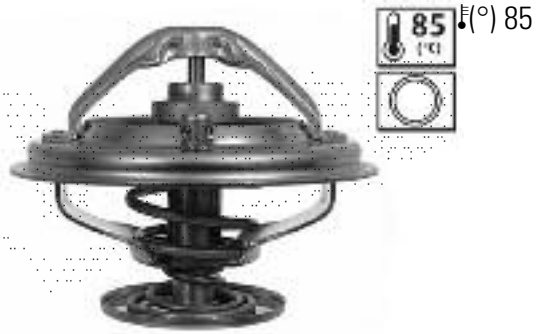

(°) 85

BMW 11531729720

Valeo 820419 (A)- (B)39 (C)33 (D)-

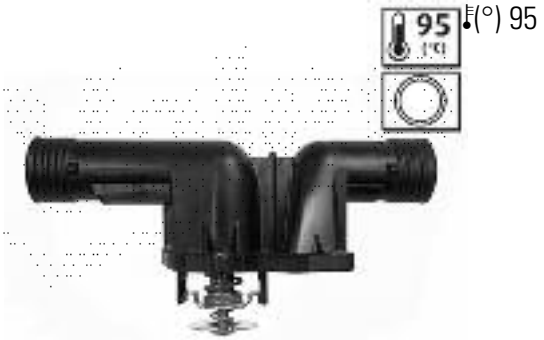

(°) 95

BMW 11531743017

Valeo 820424 (A)83 (B)43 (C)34 (D)7

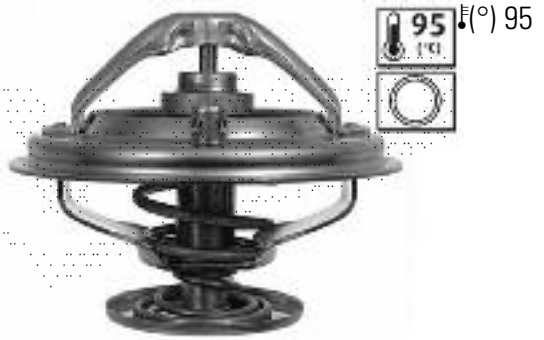

(°) 95

BMW 11531702279

Valeo 820421 (A)- (B)33 (C)31 (D)-

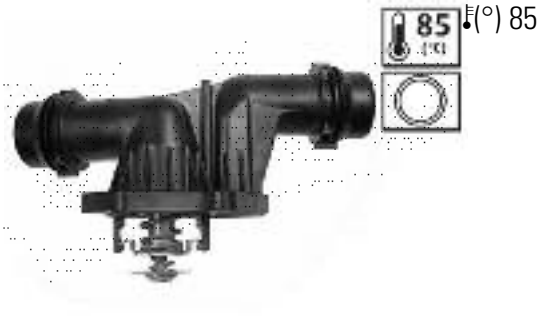

(°) 85

BMW 11532247019

Valeo 820425 (A)- (B)43 (C)39 (D)-

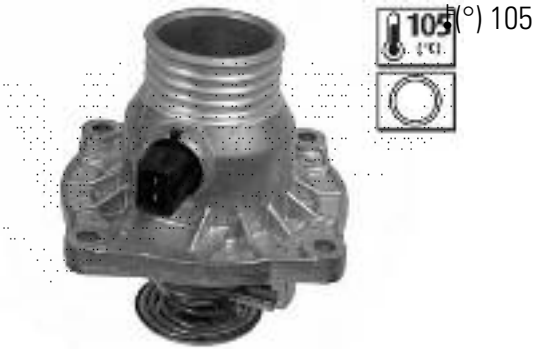

(°) 105

BMW 11531437526

820426 (A)83 (B)43 (C)34 (D)7

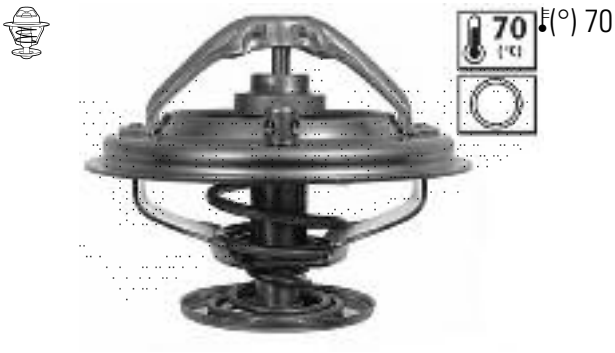

BMW 11531731486

820427 (A)- (B)43 (C)39 (D)-

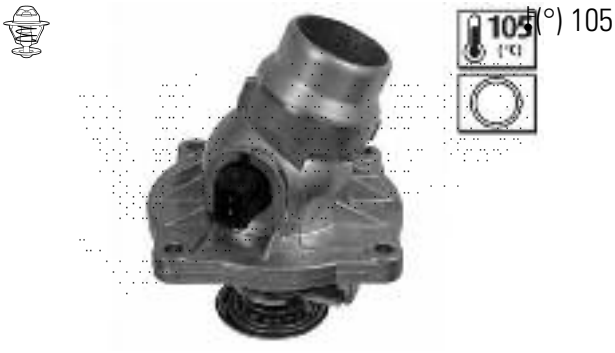

BMW 11531436386

820430 (A)- (B)- (C)35 (D)-

CITROËN 1336Q2

820431 (A)- (B)29 (C)43 (D)-

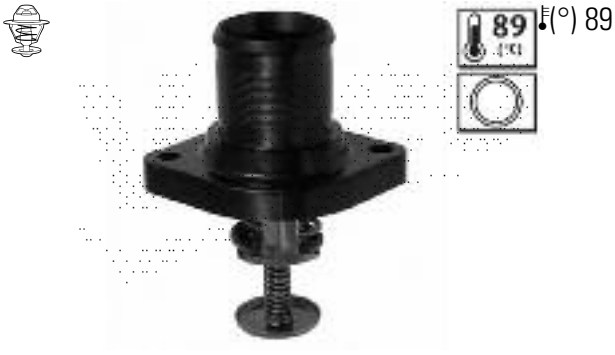

PEUGEOT 1338A0

820432 (A)54 (B)25 (C)27 (D)-

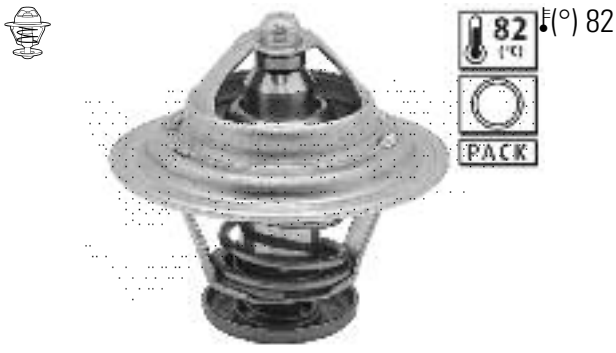

CITROËN 133890

820433 (A)- (B)- (C)23 (D)-

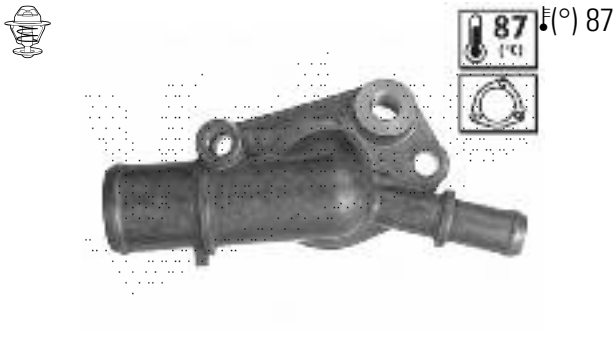

CITROËN 1336J1

820434 (A)- (B)- (C)35 (D)-

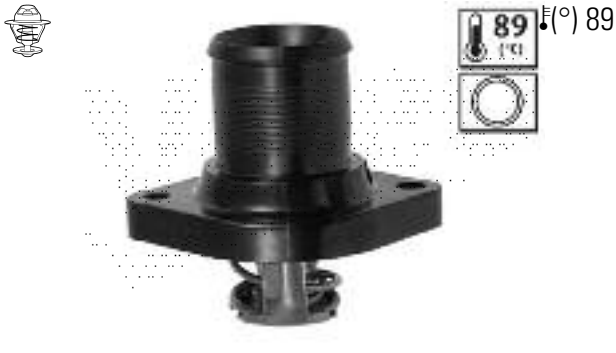

FIAT 9630066780

820435 (A)- (B)- (C)- (D)-

DAEWOO 92061279

820437 (A)- (B)29 (C)30 (D)-

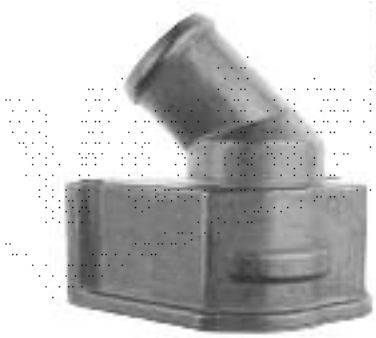

DAEWOO 92067408

820438 (A)44 (B)- (C)23 (D)-

DAEWOO 94580182

820439 (A)- (B)- (C)- (D)-

DAIHATSU 9004833041000

820440 (A)52 (B)28 (C)35 (D)-

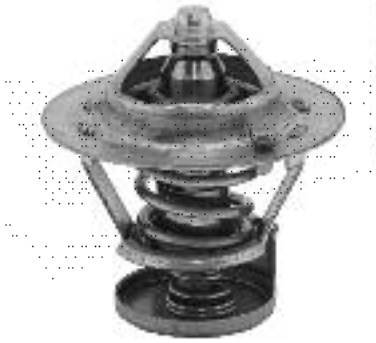

DAIHATSU 9004833055000

820442 (A)73 (B)31 (C)37 (D)11

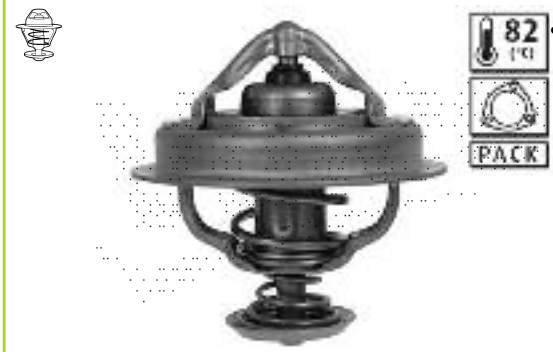

TOYOTA 9091603026

820443 (A)73 (B)31 (C)37 (D)11

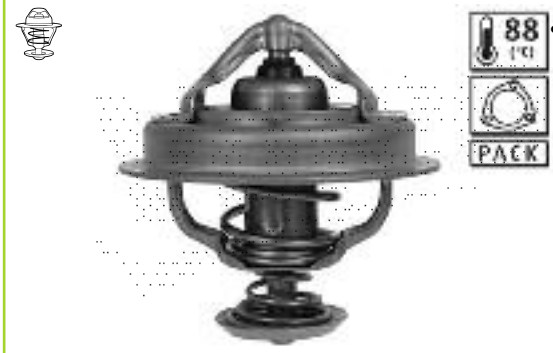

DAIHATSU 9091603103000

820444 (A)- (B)- (C)- (D)-

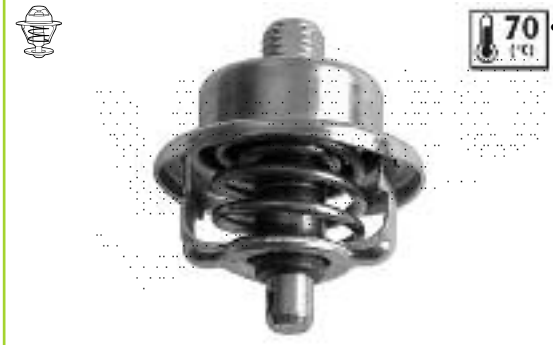

FIAT 7696535

820446 (A)- (B)- (C)- (D)-

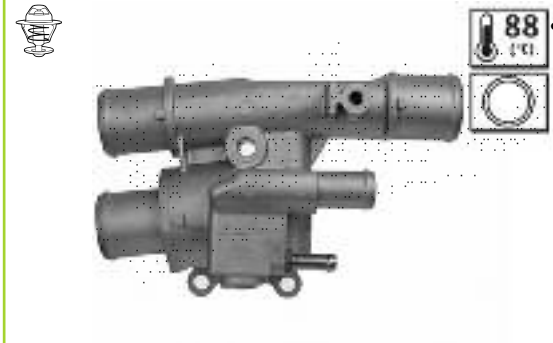

FIAT 46776216

Valeo 820447 (A)- (B)- (C)- (D)-

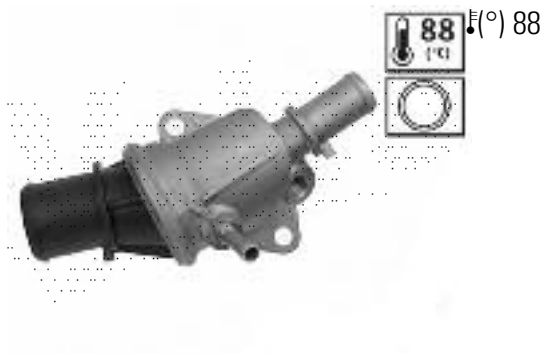

FIAT 7791178

Valeo 820448 (A)- (B)- (C)- (D)-

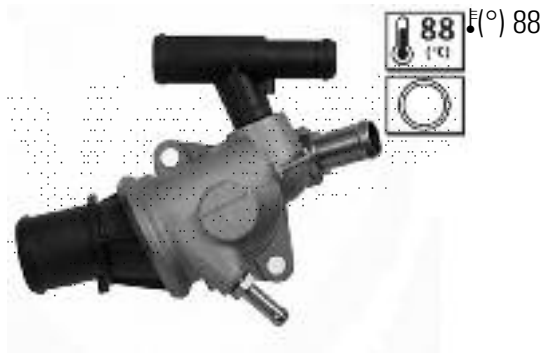

FIAT 60620386

Valeo 820449 (A)- (B)- (C)- (D)-

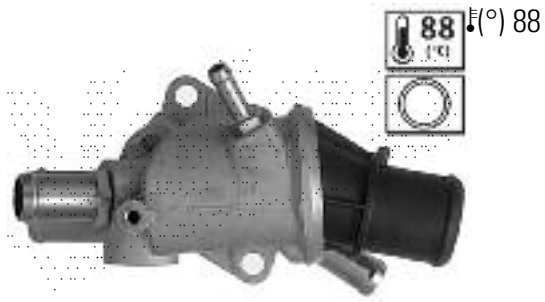

LANCIA 46520785

Valeo 820451 (A)- (B)- (C)- (D)-

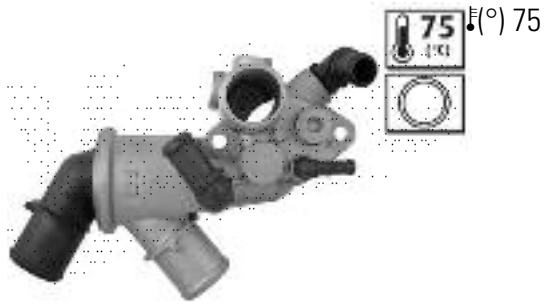

FIAT 46432896

Valeo 820452 (A)- (B)- (C)- (D)-

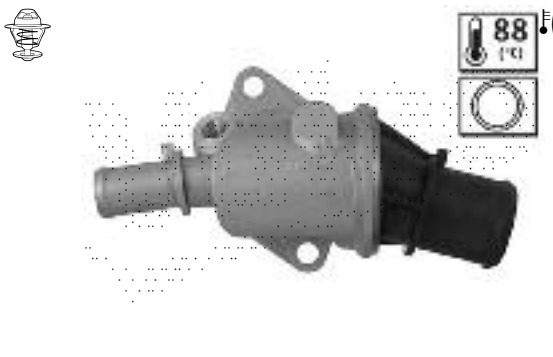

FIAT 46417962

Valeo 820453 (A)- (B)- (C)- (D)-

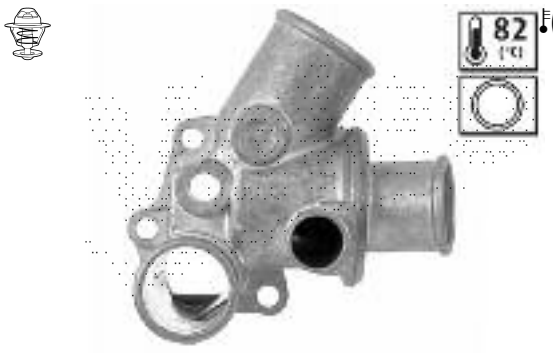

FIAT 46411298

Valeo 820454 (A)- (B)- (C)- (D)-

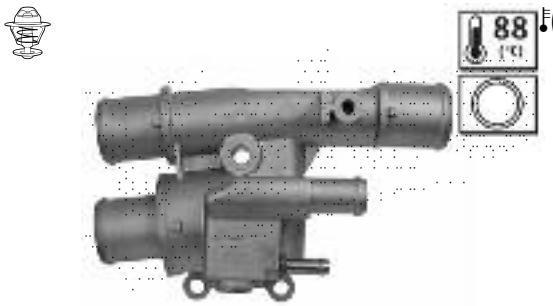

FIAT 46776217

Valeo 820457 (A)- (B)- (C)- (D)-

FIAT 7718184

820459 (A)- (B)- (C)- (D)-

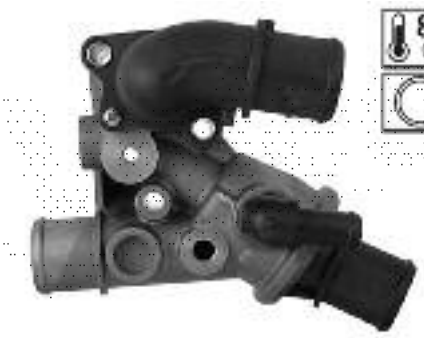

FIAT 1307270080

820460 (A)- (B)- (C)- (D)-

FIAT 46466123

820461 (A)- (B)- (C)- (D)-

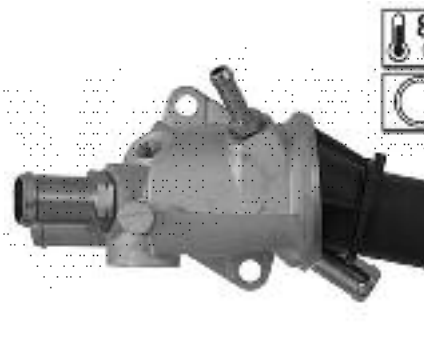

LANCIA 7756249

820462 (A)- (B)- (C)- (D)-

FIAT 7721399

820463 (A)- (B)- (C)- (D)-

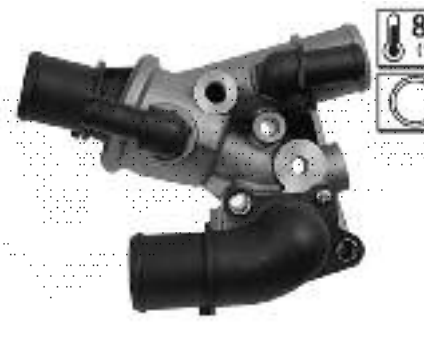

FIAT 7770236

820464 (A)- (B)- (C)- (D)-

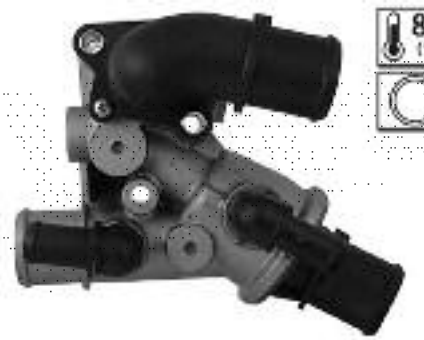

FIAT 7794132

820465 (A)- (B)- (C)- (D)-

FIAT 7770416

820466 (A)- (B)- (C)23 (D)-

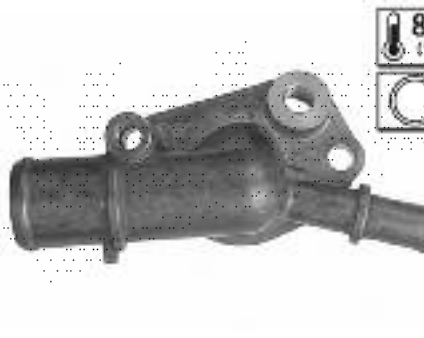

FIAT 7725918

Valeo 820467 (A)- (B)- (C)- (D)-

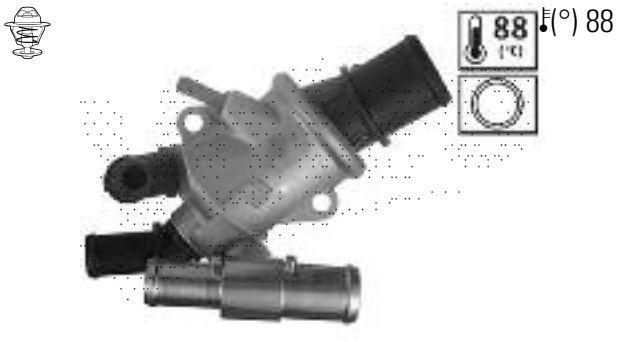

FIAT 46758434

Valeo 820468 (A)- (B)- (C)- (D)-

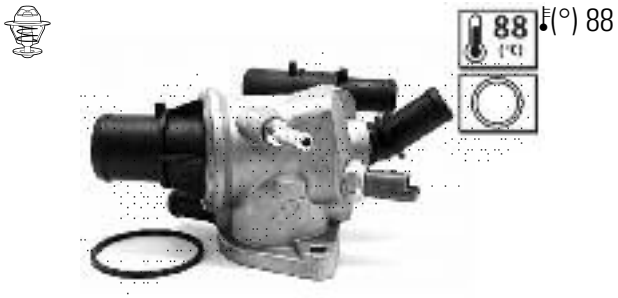

FIAT 46758586

Valeo 820471 (A)- (B)- (C)- (D)-

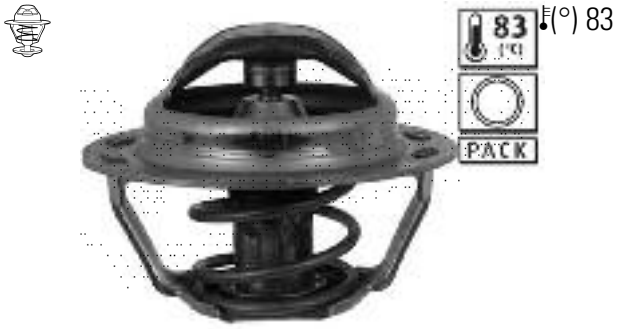

PEUGEOT 133839

Valeo 820472 (A)- (B)- (C)- (D)-

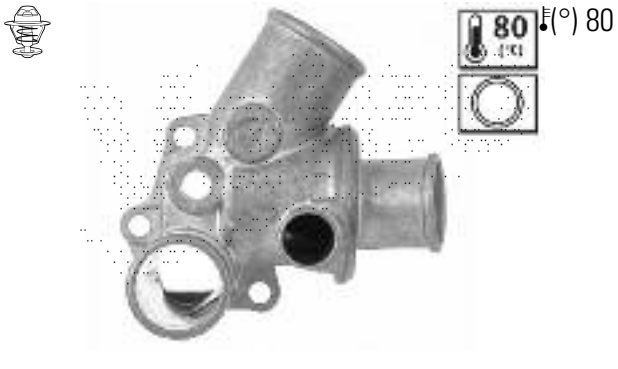

FIAT 7580642

Valeo 820473 (A)- (B)- (C)- (D)-

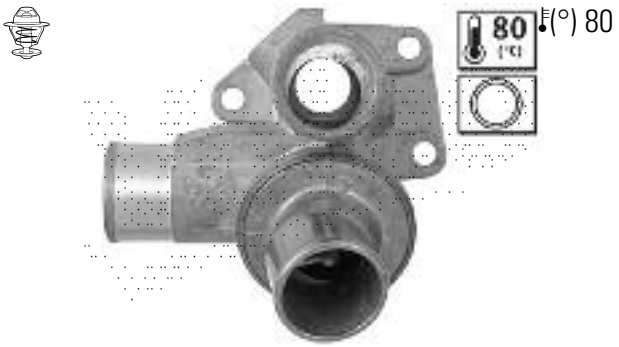

FIAT 7628332

Valeo 820474 (A)- (B)- (C)13 (D)-

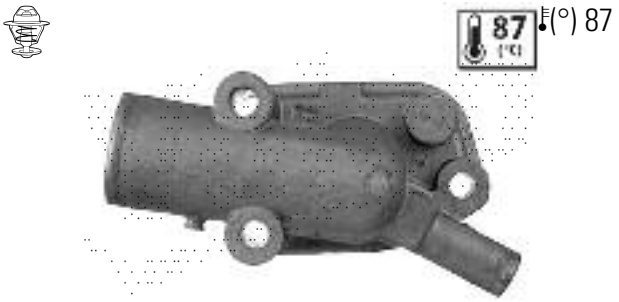

FIAT 7589454

Valeo 820475 (A)51,9 (B)35 (C)33,5 (D)-

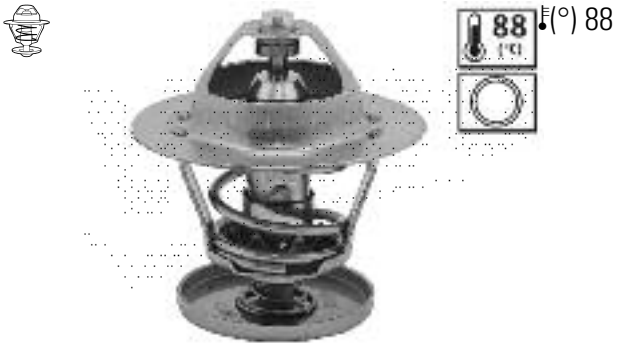

FORD 1086282

Valeo 820476 (A)53, 5 (B)- (C)23 (D)-

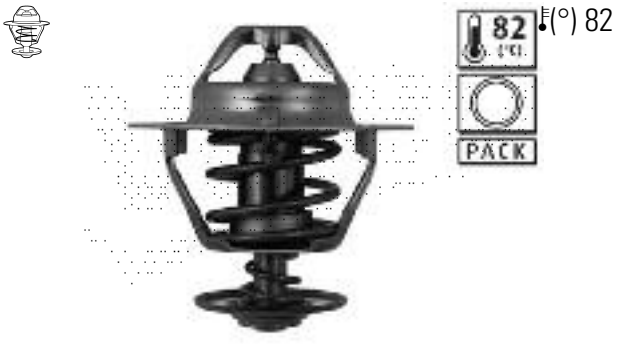

MAZDA 855315171

820478 (A)51, 9 (B)- (C)22, 5 (D)-

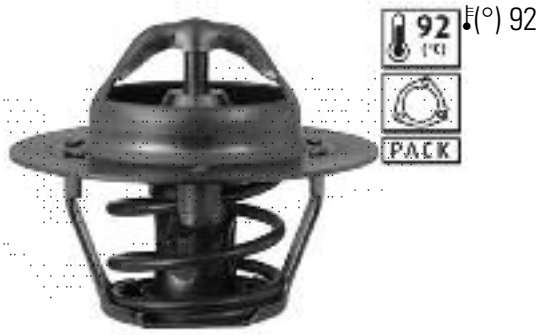

(°) 92

FORD USA 6758566

820480 (A)67 (B)35 (C)25, 5 (D)7, 5

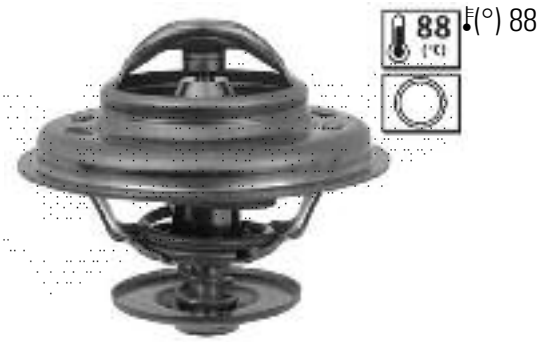

(°) 88

JAGUAR EBC3621

820481 (A)54 (B)33 (C)33 (D)-

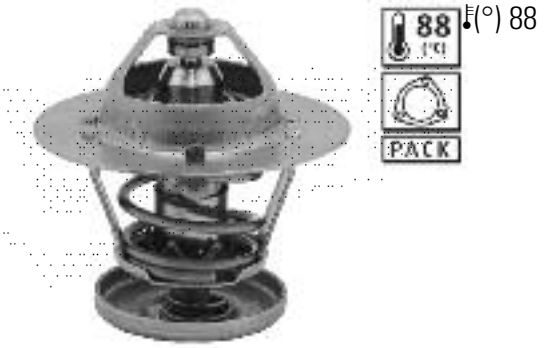

(°) 88

HYUNDAI 0K41015171A

820485 (A)54 (B)- (C)23 (D)-

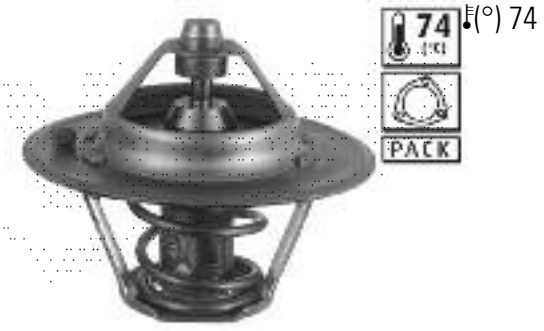

(°) 74

LAND ROVER ETC4761

820486 (A)54 (B)- (C)23 (D)-

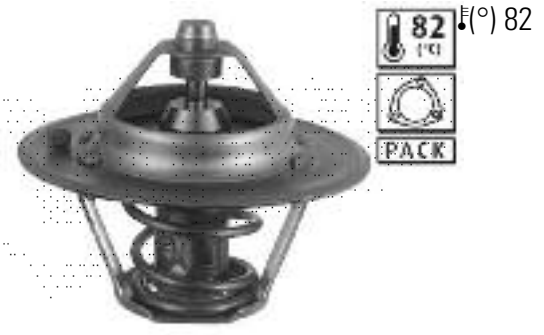

(°) 82

LAND ROVER ETC4763

820487 (A)52 (B)33 (C)40 (D)-

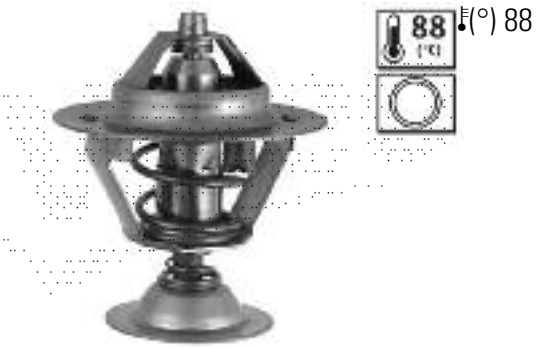

(°) 88

LAND ROVER ERR3291

820488 (A)54 (B)- (C)23 (D)-

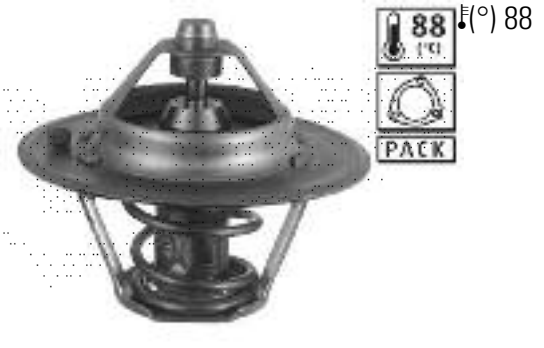

(°) 88

LAND ROVER ETC4765

820491 (A)- (B)- (C)- (D)-

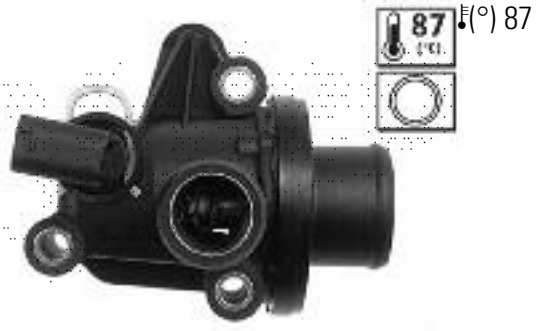

(°) 87

MERCEDES 1662030275

820492 (A)- (B)- (C)- (D)-

MERCEDES 6682030275

820494 (A)67 (B)29 (C)44 (D)7, 5

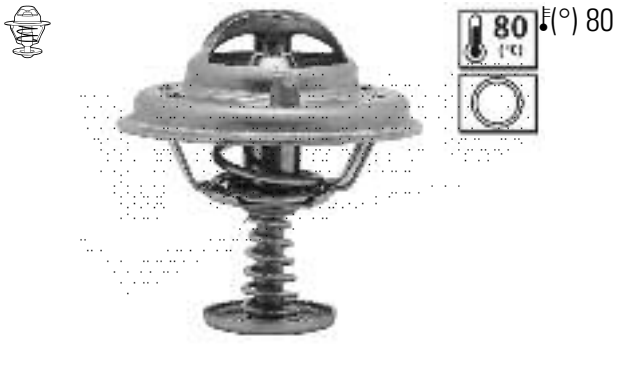

MERCEDES 1162000315

820495 (A)- (B)43 (C)34 (D)-

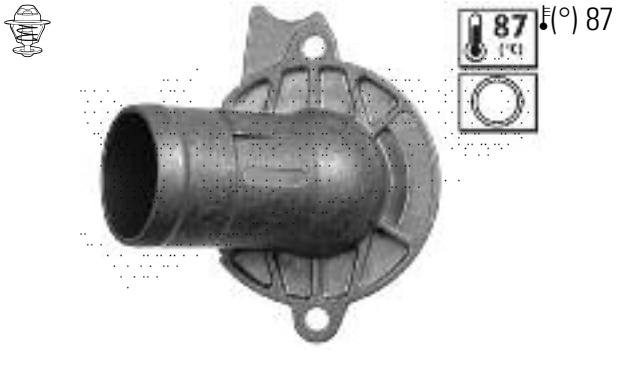

MERCEDES 1122030275

820496 (A)52 (B)28 (C)34 (D)-

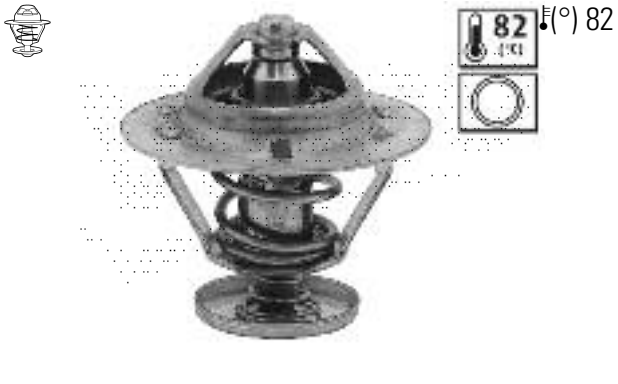

MITSUBISHI MD972909

820499 (A)- (B)- (C)- (D)-

CHRYSLER 4741778

820500 (A)- (B)29 (C)30 (D)-

OPEL 1338069

820501 (A)- (B)29 (C)30 (D)-

OPEL 1338094

820502 (A)- (B)- (C)- (D)-

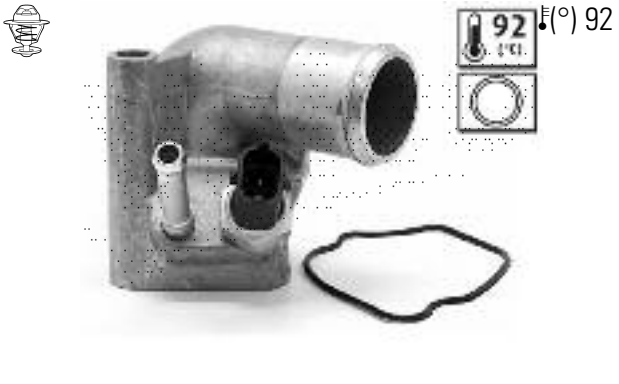

OPEL 1338001

820503 (A)- (B)30 (C)10 (D)-

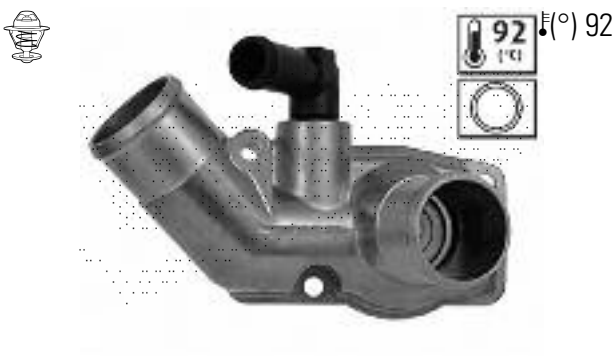

(°) 92

VAUXHALL 90572899

820504 (A)- (B)30 (C)30 (D)-

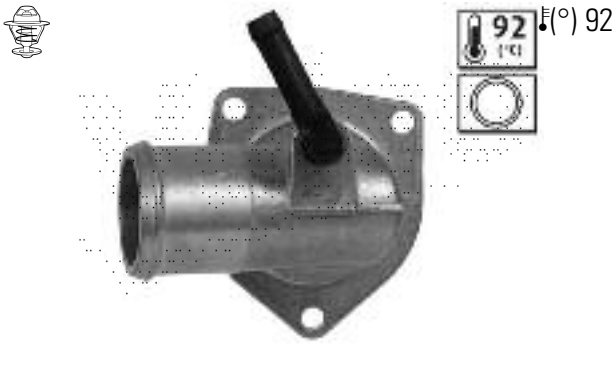

(°) 92

OPEL 1338331

820506 (A)54 (B)22 (C)33 (D)-

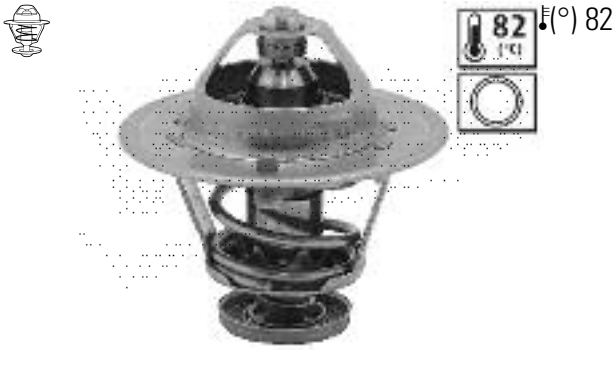

(°) 82

BEDFORD 97089891

820507 (A)- (B)30 (C)10 (D)-

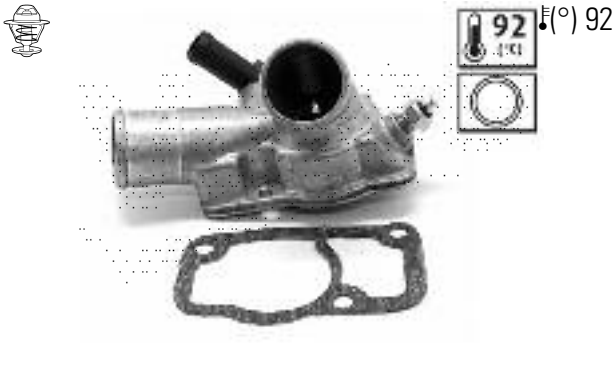

(°) 92

OPEL 1338087

820509 (A)44 (B)- (C)23 (D)-

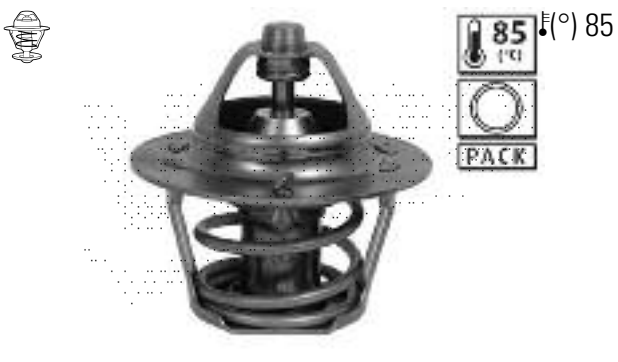

(°) 85

SUBARU 21200KA152

820510 (A)- (B)- (C)- (D)-

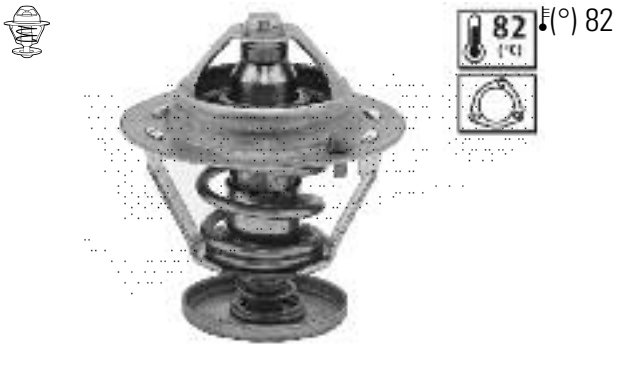

(°) 82

TOYOTA 9091603090

820511 (A)60 (B)30 (C)41 (D)-

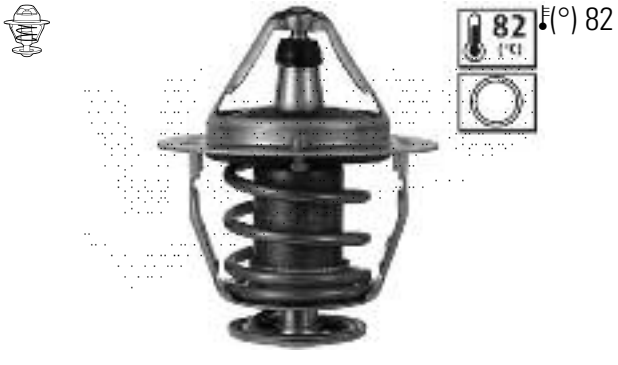

(°) 82

HYUNDAI 255003C100

820512 (A)56 (B)28 (C)43,5 (D)-

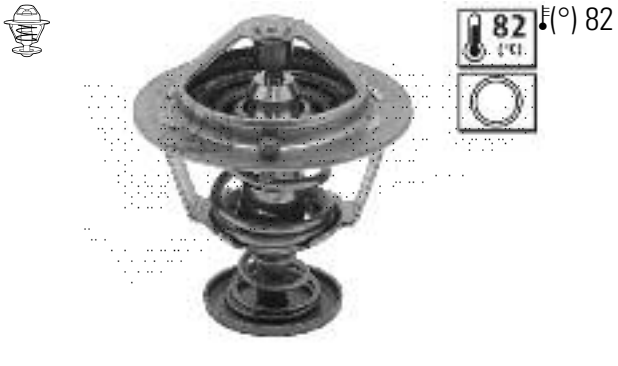

(°) 82

LEXUS 9091603084

820513 (A)64 (B)30 (C)41 (D)-

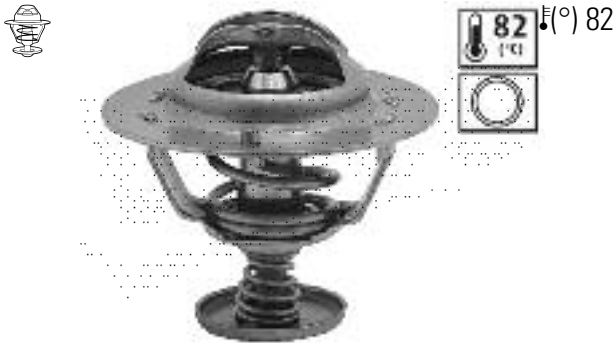

TOYOTA 9091603100

820514 (A)64 (B)30 (C)41 (D)-

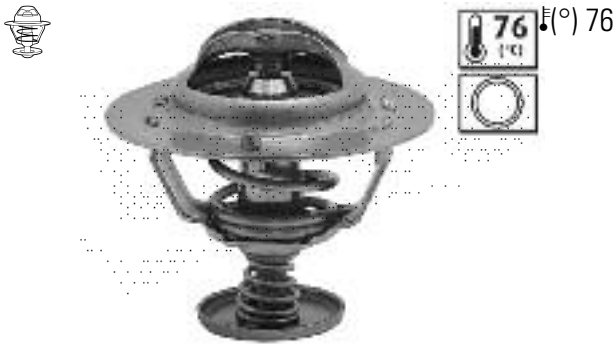

HONDA 19301P8CA11

820515 (A)48 (B)28 (C)33 (D)-

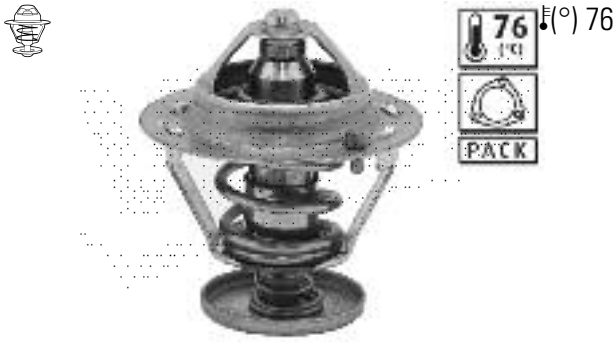

TOYOTA 9091603112

820516 (A)56 (B)28 (C)34 (D)-

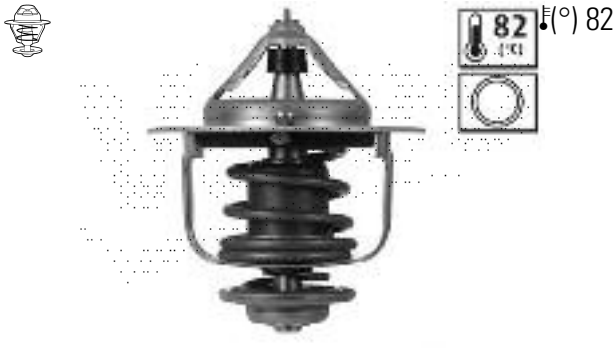

TOYOTA 9091603120

820518 (A)- (B)- (C)- (D)-

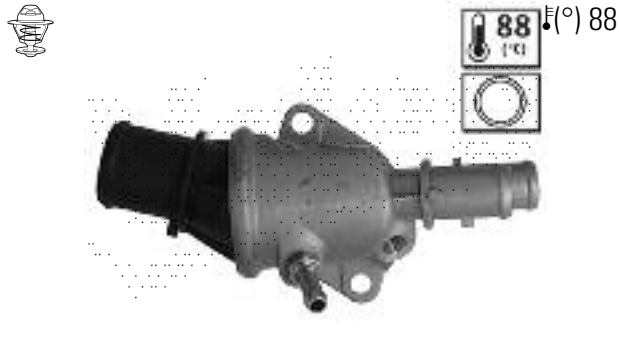

ALFA ROMEO 46527104

820519 (A)- (B)- (C)- (D)-

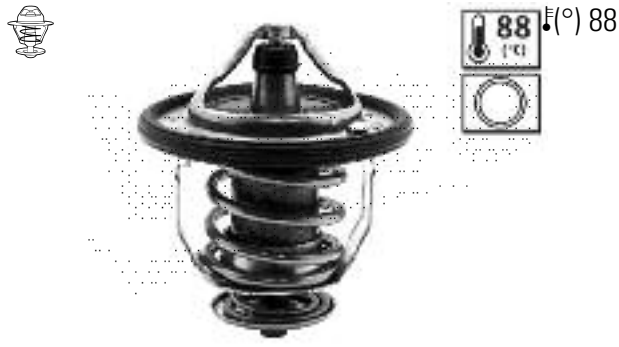

MITSUBISHI MD328070

820520 (A)67 (B)43 (C)25, 5 (D)7, 5

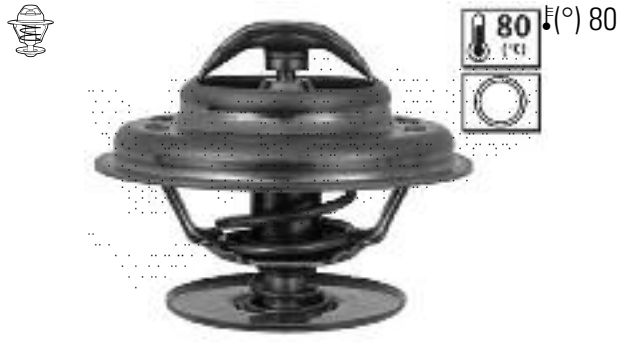

BMW 11231265085

820524 (A)48 (B)28 (C)33 (D)-

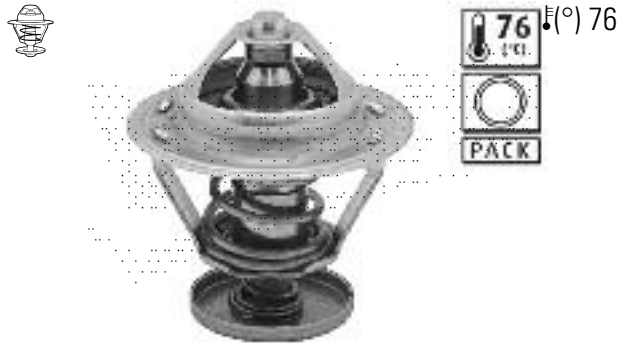

NISSAN 2120077A60

820525 (A)54 (B)35 (C)29,5 (D)-

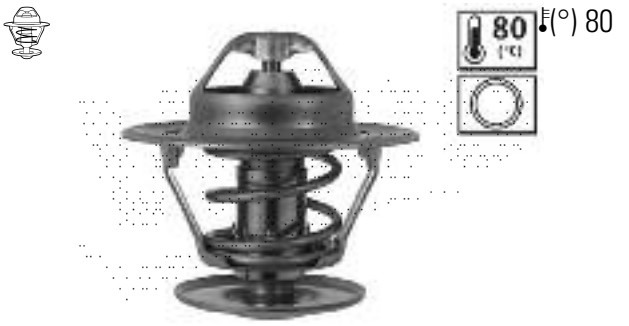

FORD 6106381

820526 (A)54 (B)29 (C)13 (D)18

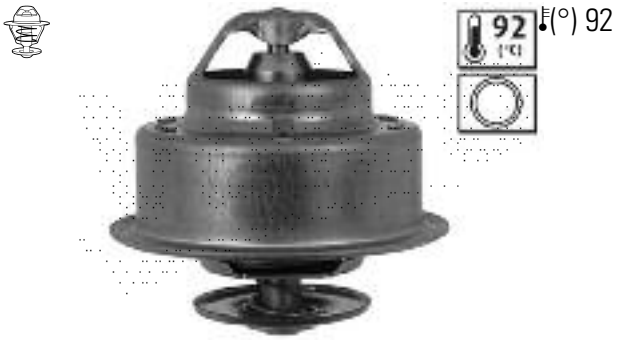

VOLVO 2733079

820527 (A)54 (B)35 (C)31 (D)-

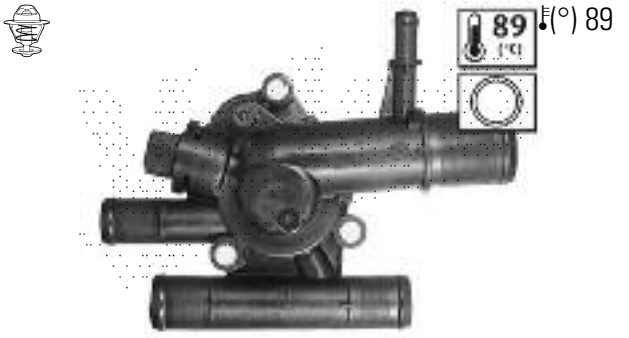

NISSAN 1106100QAD

820533 (A)56 (B)28 (C)43, 5 (D)-

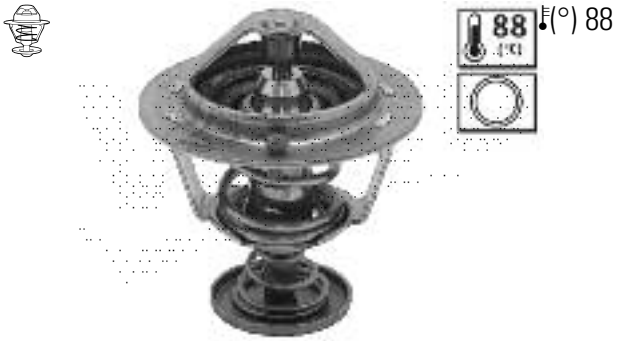

TOYOTA 9091603127

820534 (A)67 (B)29 (C)25, 5 (D)10, 5

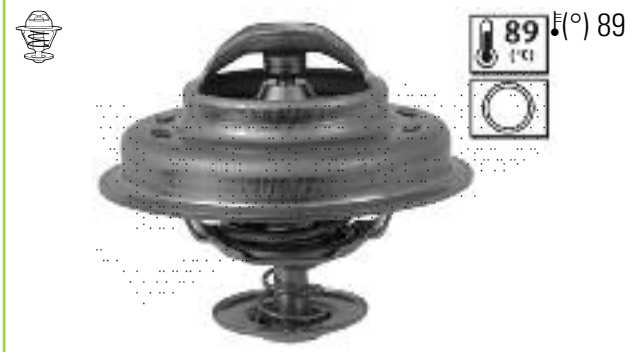

VOLVO 3485203

820535 (A)- (B)- (C)- (D)-

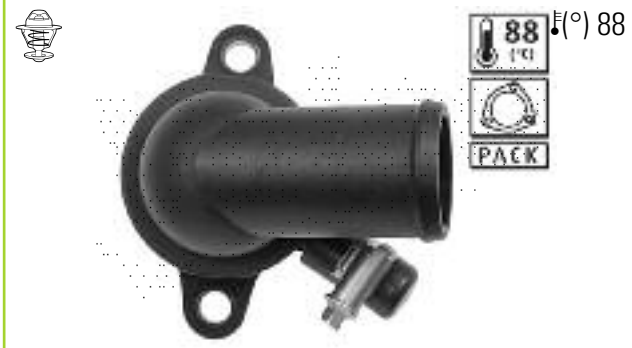

DAEWOO 96282726

820536 (A)- (B)- (C)- (D)-

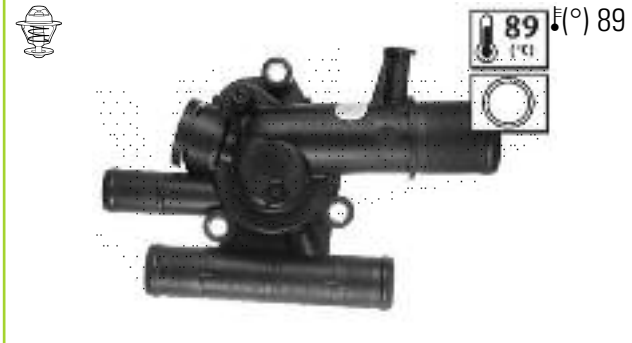

RENAULT 8200112054

820537 (A)- (B)- (C)- (D)-

DACIA 8200374994

820538 (A)- (B)- (C)- (D)-

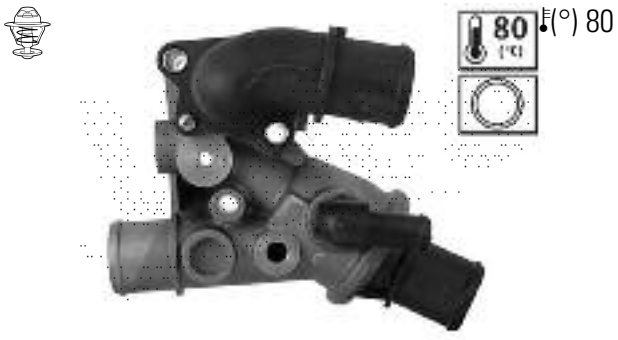

FIAT 1307274080

820539 (A)- (B)- (C)- (D)-

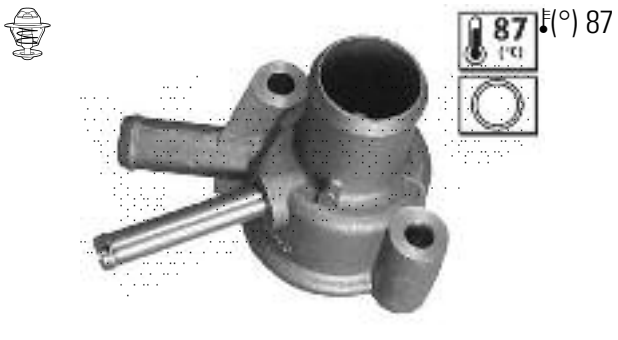

FIAT 7759596

820541 (A)60 (B)- (C)22, 5 (D)-

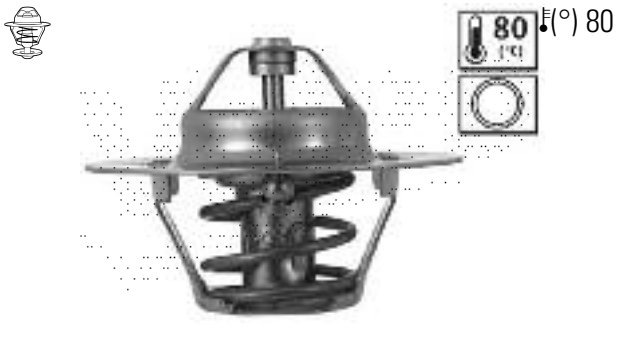

SKODA 113095090

820542 (A)52 (B)28 (C)34 (D)-

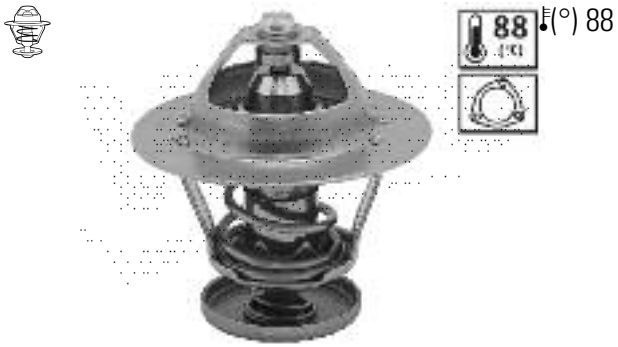

FORD 1096283

820544 (A)52 (B)- (C)26 (D)-

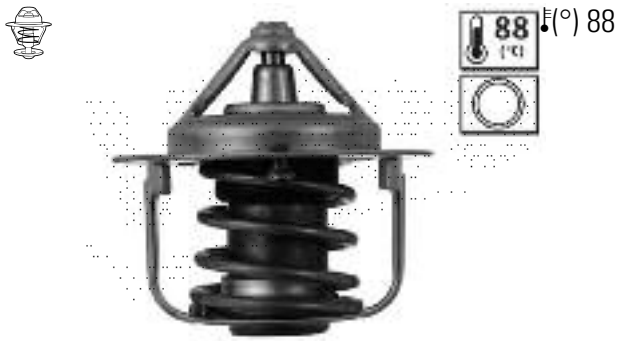

HONDA 19300PB2817

820545 (A)52 (B)28 (C)33 (D)-

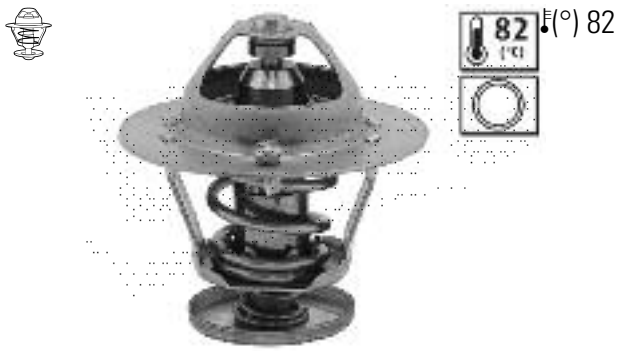

TOYOTA 9091603079

820546 (A)73 (B)57,6 (C)37 (D)-

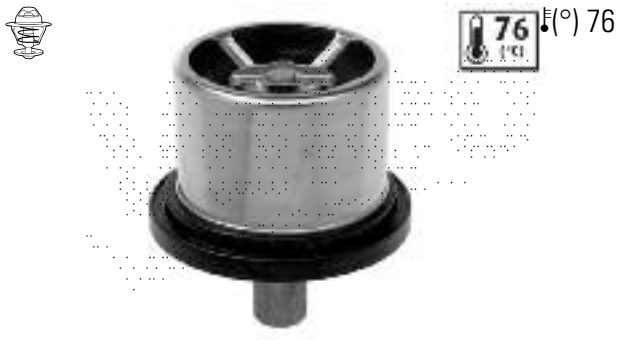

BMW 11531407772

820547 (A)- (B)- (C)- (D)-

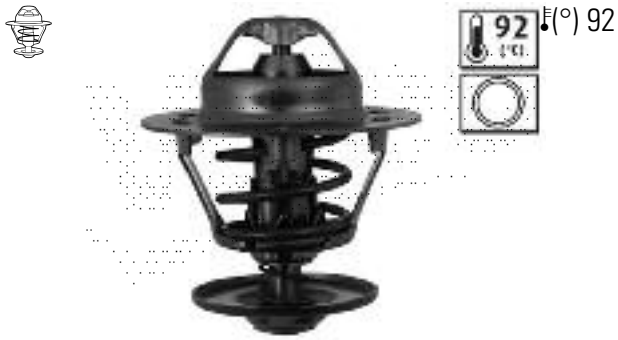

MAZDA YF0915171

820548 (A)- (B)- (C)- (D)-

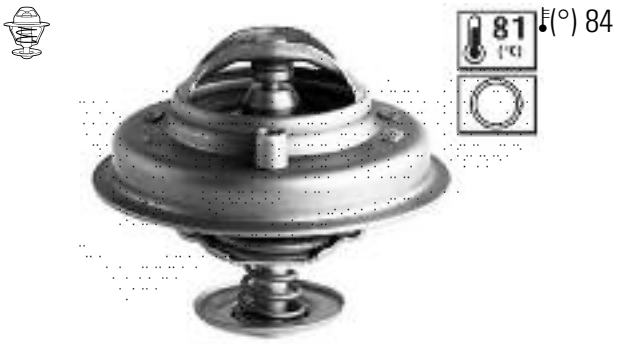

JAGUAR AJ86484

820549 (A)- (B)- (C)- (D)-

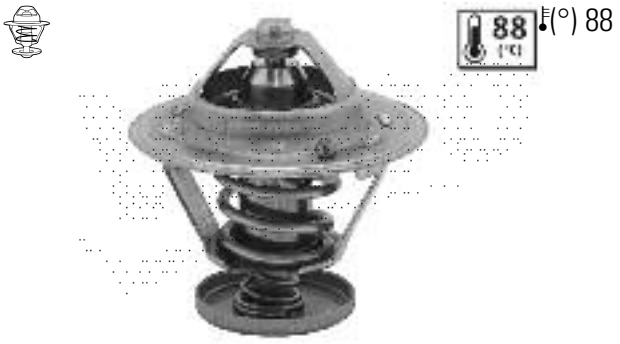

HONDA 19301PHM305

820552 (A)- (B)- (C)- (D)-

MITSUBISHI MD338234

820553 (A)64 (B)30 (C)43 (D)-

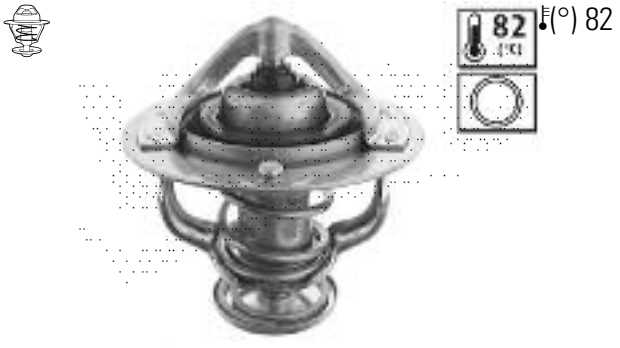

HYUNDAI 2550035531

820555 (A)- (B)- (C)- (D)-

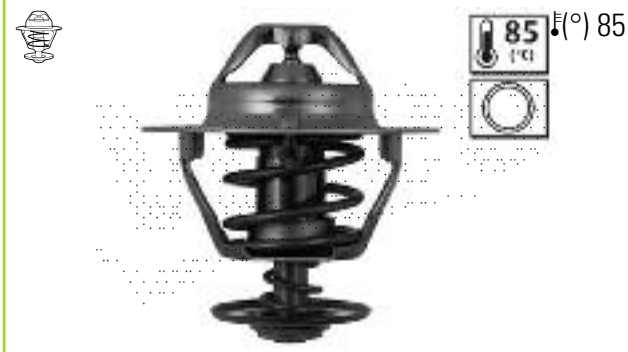

HYUNDAI 2550027000

820556 (A)- (B)- (C)- (D)-

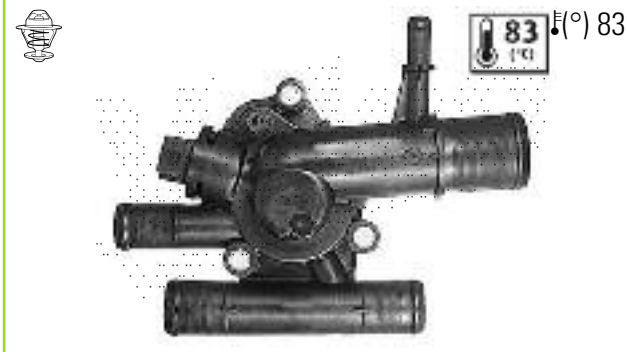

NISSAN 1106100QAB

820557 (A)- (B)- (C)- (D)-

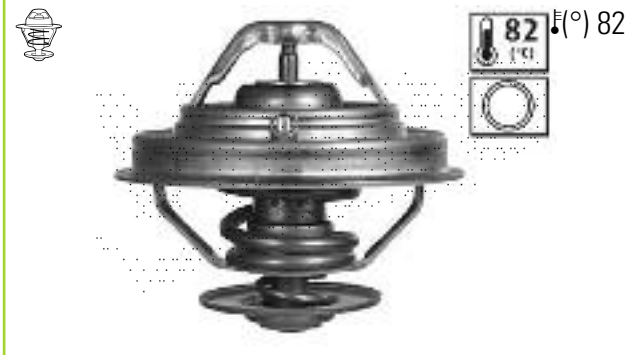

AUDI 077121113C

820559 (A)- (B)- (C)- (D)-

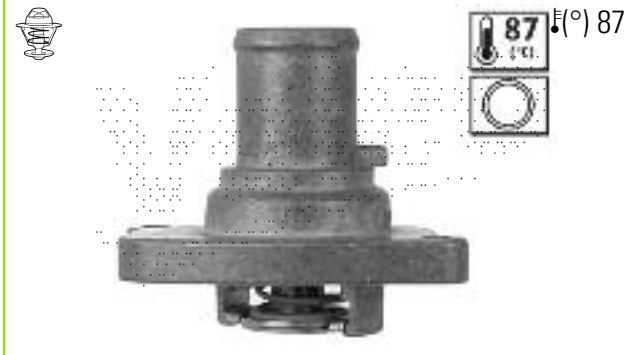

FIAT 46737644

820561 (A)- (B)- (C)- (D)-

ALFA ROMEO 46822435

820562 (A)- (B)- (C)- (D)-

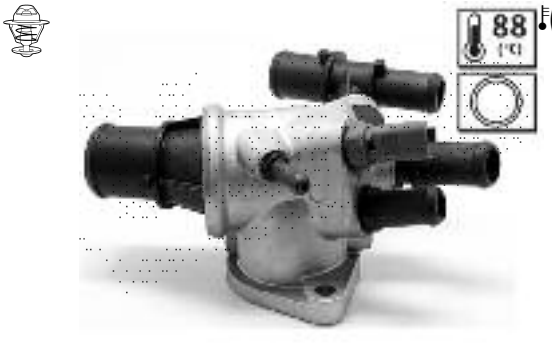

ALFA ROMEO 46790294

820563 (A)- (B)- (C)- (D)-

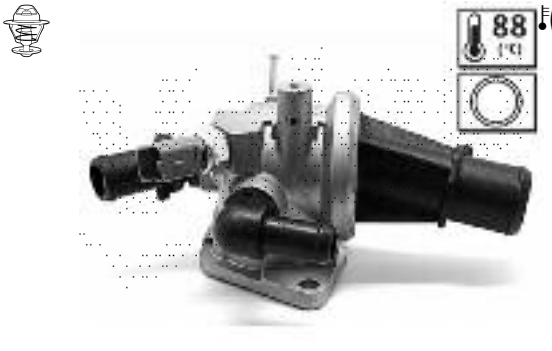

FIAT 55180041

820564 (A)48 (B)- (C)26,5 (D)-

FORD 1303377

820565 (A)48 (B)- (C)26,5 (D)-

FORD 1303374

820567 (A)- (B)- (C)- (D)-

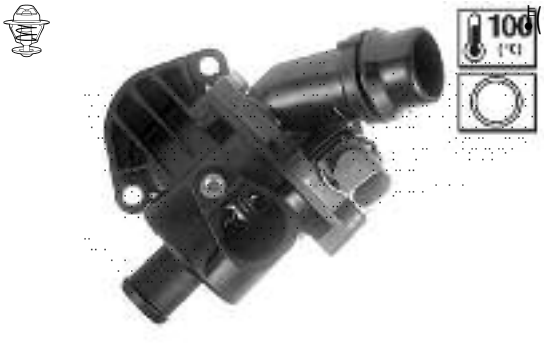

AUDI 06B121111D

820568 (A)46 (B)- (C)24 (D)-

CHRYSLER 4495721

820571 (A)- (B)- (C)- (D)-

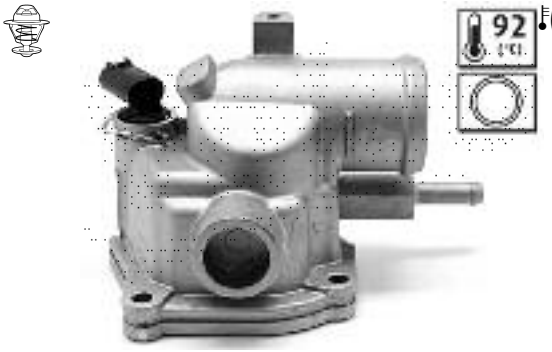

MERCEDES 6462000015

Valeo 820576 (A)- (B)- (C)- (D)-

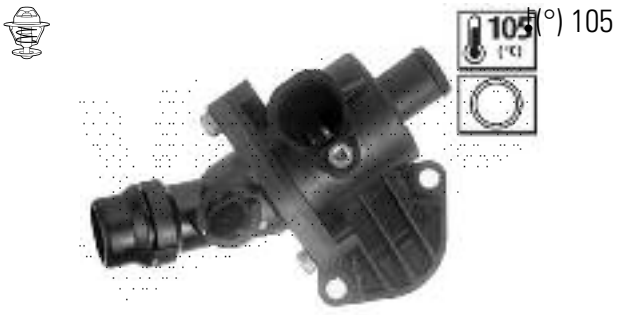

AUDI 06F121111

Valeo 820577 (A)- (B)- (C)- (D)-

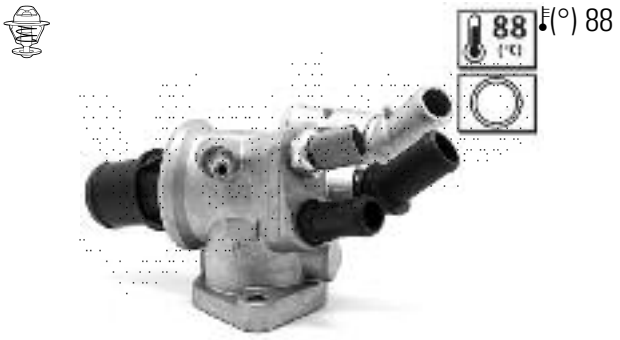

FIAT 55186478

Valeo 820578 (A)- (B)- (C)- (D)-

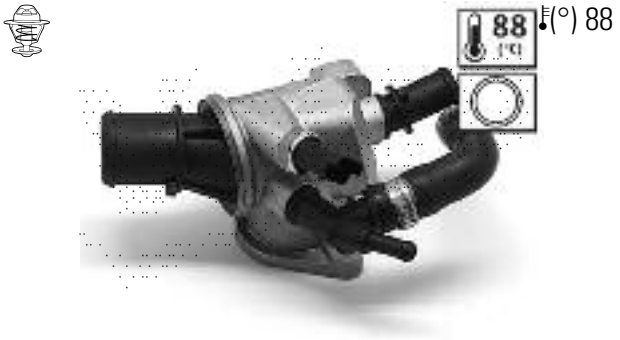

ALFA ROMEO 55189843

Valeo 820586 (A)- (B)- (C)- (D)-

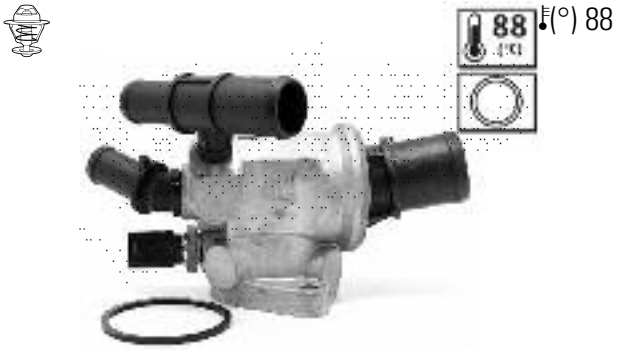

FIAT 46800798

Valeo 820587 (A)- (B)- (C)- (D)-

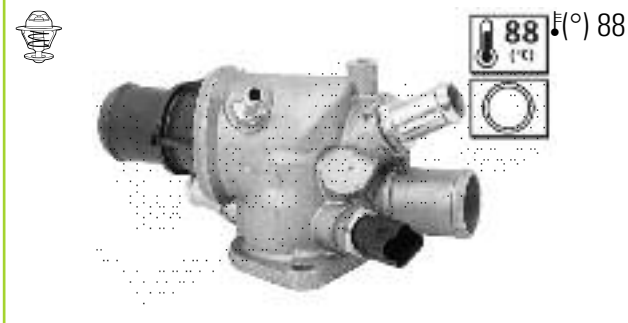

FIAT 46804764

Valeo 820588 (A)- (B)- (C)- (D)-

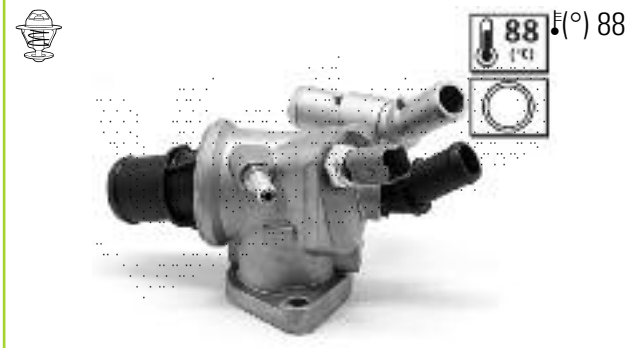

FIAT 55190049

Valeo 820589 (A)- (B)- (C)- (D)-

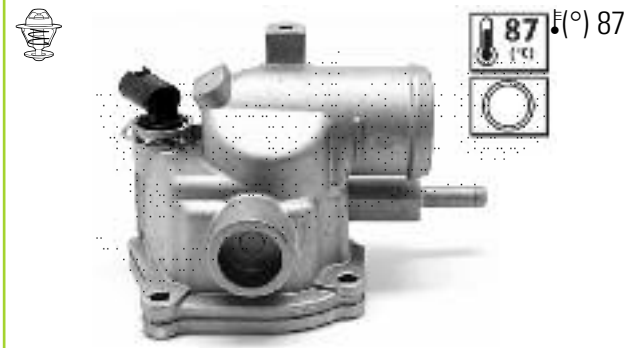

MERCEDES 6112000715

Valeo 820590 (A)- (B)30 (C)10 (D)-

VAUXHALL 24447862

820591 (A)- (B)30 (C)10 (D)-

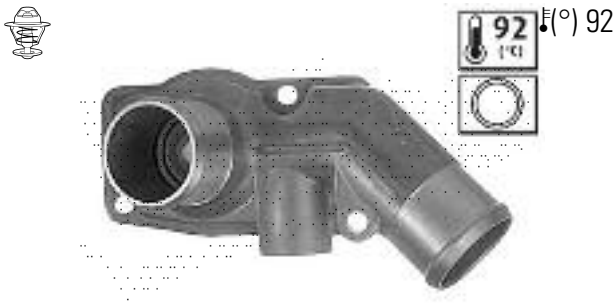

OPEL 6338004

820592 (A)- (B)30 (C)10 (D)-

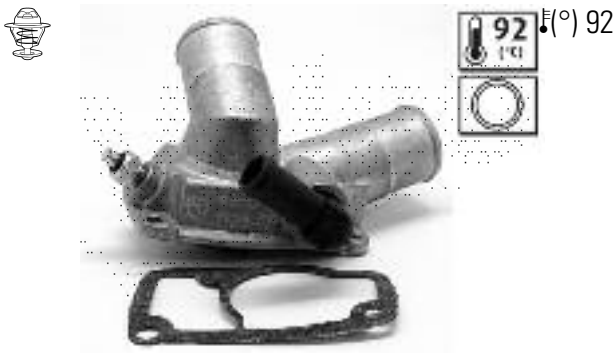

OPEL 1338097

820593 (A)- (B)30 (C)30 (D)-

OPEL 1338003

820594 (A)- (B)30 (C)10 (D)-

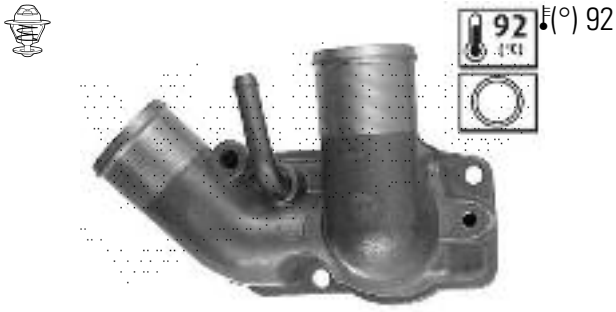

OPEL 1338015

820595 (A)- (B)- (C)- (D)-

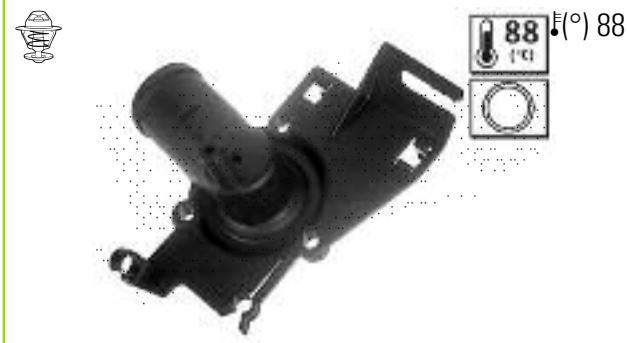

SKODA 047121111A

820596 (A)- (B)30 (C)28 (D)-

NISSAN 2120031U13

820597 (A)52 (B)33 (C)47 (D)-

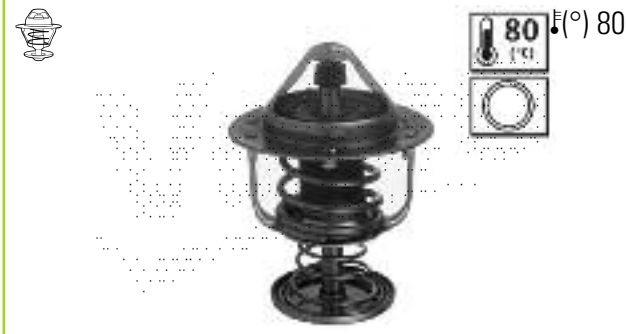

DAIHATSU 9004833088000

820598 (A)- (B)- (C)- (D)-

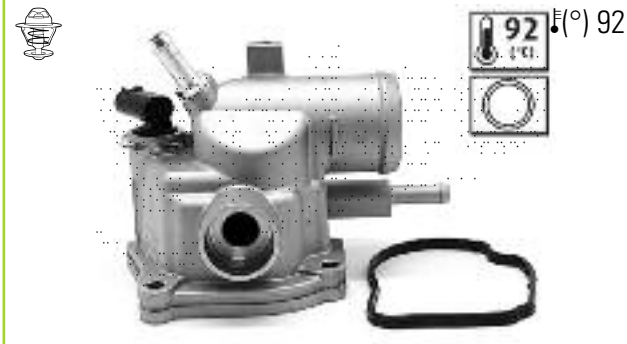

MERCEDES 6112000615

820767 (A)51,9 (B)- (C)22,5 (D)-

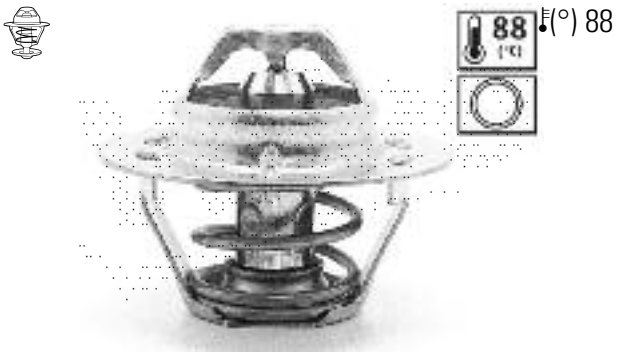

SUZUKI 1760060823

820768 (A)67 (B)43 (C)25,5 (D)7,5

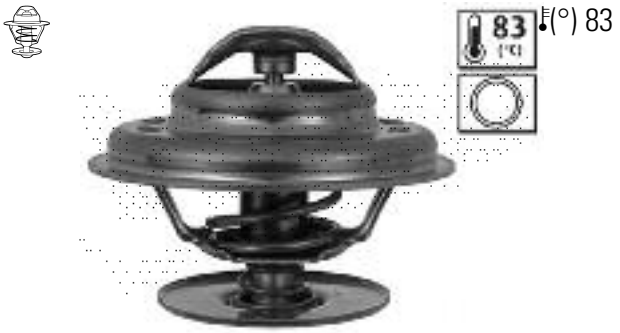

MERCEDES 1152000615

820771 (A)54 (B)29 (C)33,5 (D)-

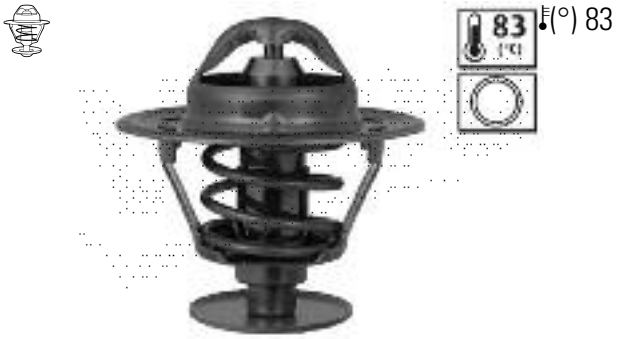

MITSUBISHI MD015299

820773 (A)51,9 (B)30 (C)33 (D)-

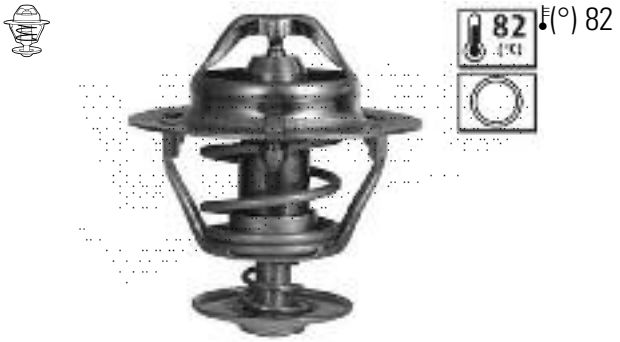

TOYOTA 9091603061

820776 (A)- (B)- (C)- (D)-

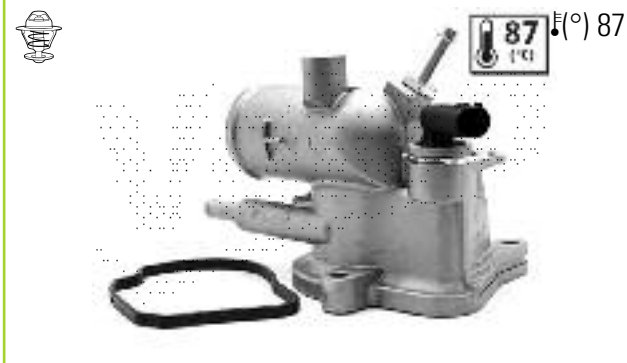

MERCEDES 6112000015

820781 (A)- (B)- (C)- (D)-

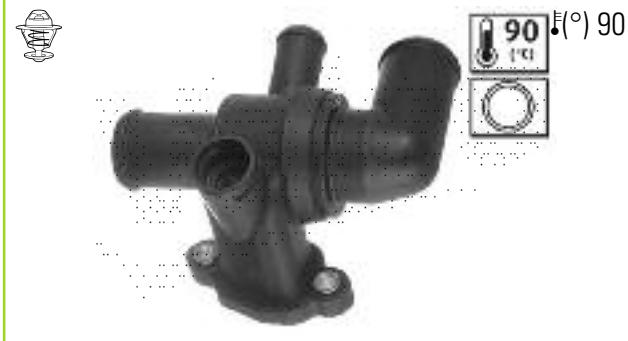

SMART 0003179V010000000

820786 (A)- (B)- (C)- (D)-

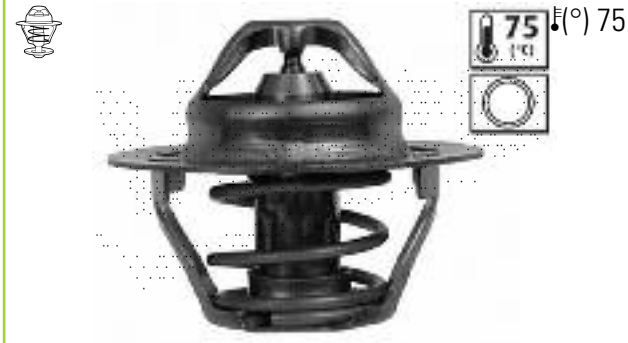

RENAULT 8200525397

820788 (A)67 (B)33 (C)23 (D)7,5

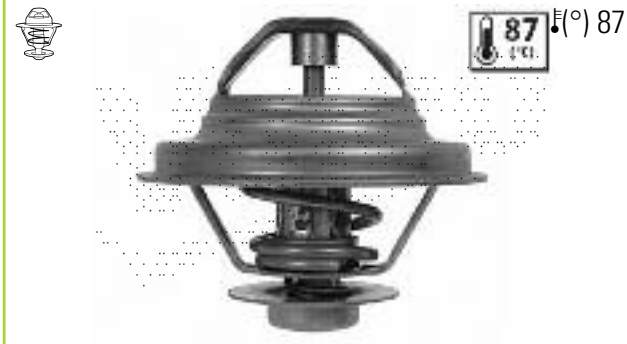

VOLKSWAGEN 025121113F

820791 (A)- (B)- (C)- (D)-

80 (°) 80

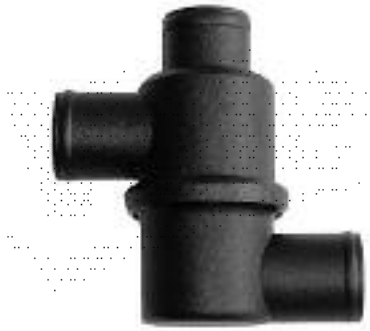

LADA 21211306010

820797 (A)- (B)- (C)- (D)-

80 (°) 80

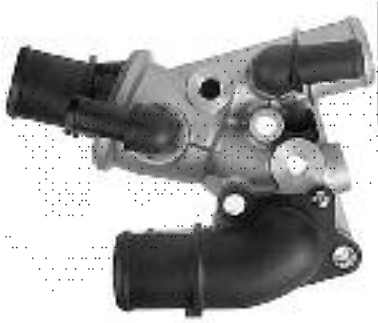

FIAT 46459502

820793 (A)52 (B)28 (C)40 (D)-

82 (°) 82

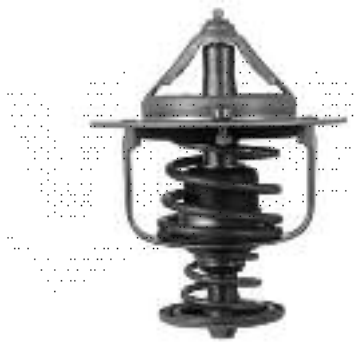

FORD 4188498

820800 (A)- (B)- (C)- (D)-

92 (°) 92

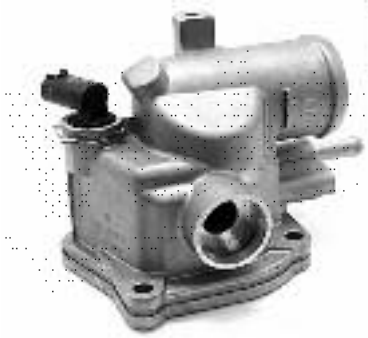

MERCEDES 6112000515

820795 (A)- (B)- (C)- (D)-

88 (°) 88

SKODA 047121111P

820828 COD. 22x1,5

(°) (T1)100 (T2)- (T3)95 (T4)-

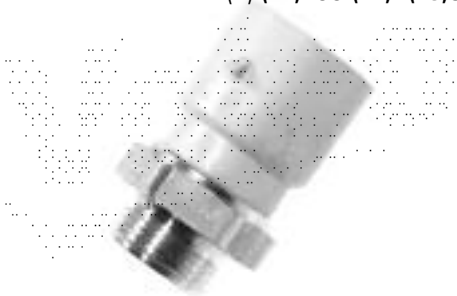

OPEL 1341030

820796 (A)- (B)- (C)- (D)-

88 (°) 88

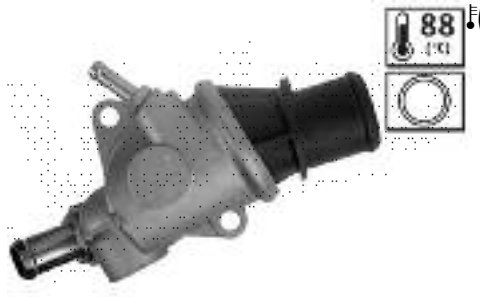

ALFA ROMEO 60663619

820829

(°) (T1)112 (T2)- (T3)120 (T4)-

FORD 7210733

820830

COD. 22x1,5

(°) **(T1)**87 **(T2)**82 **(T3)**92 **(T4)**82

RENAULT 6025106008

820831

COD. 22x1,5

(°) **(T1)**90 **(T2)**- **(T3)**85 **(T4)**-

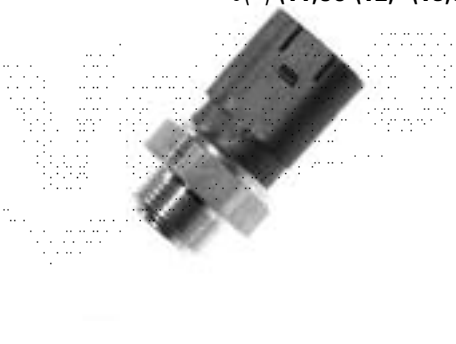

AUDI 1J0959481A

820832

(°) **(T1)**96 **(T2)**- **(T3)**88 **(T4)**-

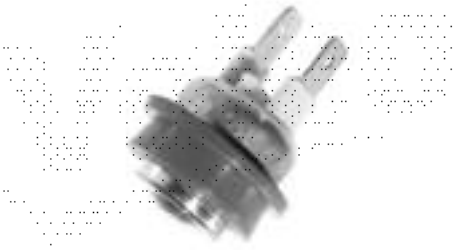

NISSAN 21595Q9025

820833

(°) **(T1)**120 **(T2)**- **(T3)**- **(T4)**-

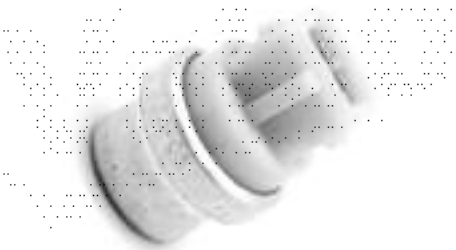

AUDI 191919369A

820834

COD. 14x1,25

(°) **(T1)**60 **(T2)**- **(T3)**- **(T4)**-

CITROËN 133827

820835

(A)- (B)- (C)- (D)-

(°) 87

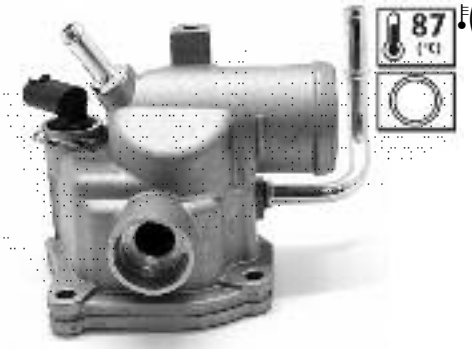

MERCEDES 6122000015

820836

(A)- (B)- (C)- (D)-

(°) 90

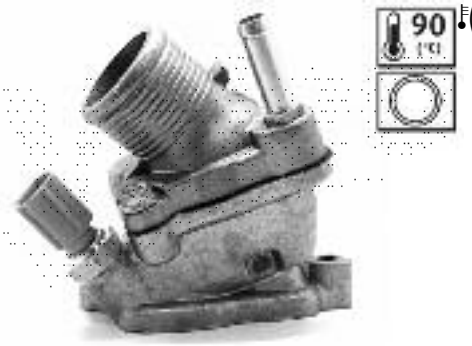

VOLVO 30650469

820837

(A)- (B)- (C)- (D)-

(°) 88

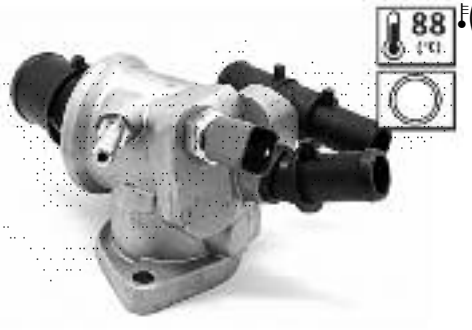

FIAT 46559840

820853 (A)- (B)- (C)- (D)-

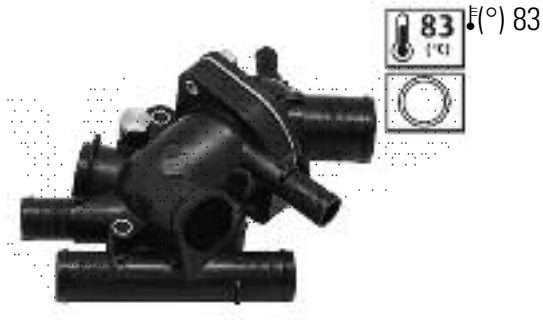

BMW 11517805192

820934 (A)- (B)- (C)- (D)-

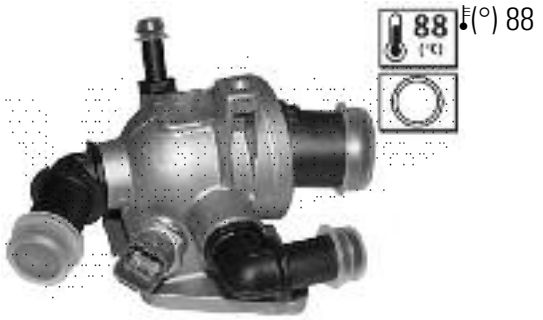

FIAT 55194271

820926 (A)- (B)- (C)- (D)-

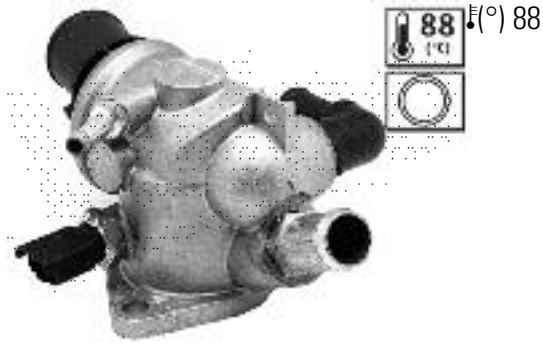

ALFA ROMEO 60676067

820935 (A)- (B)- (C)- (D)-

FIAT 55202176

820930 (A)25 (B)35 (C)- (D)-

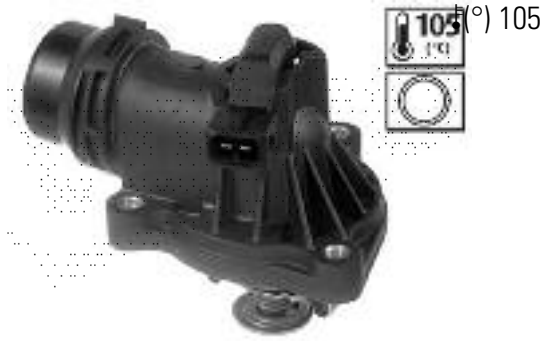

BMW 11537510959

820940 (A)- (B)- (C)- (D)-

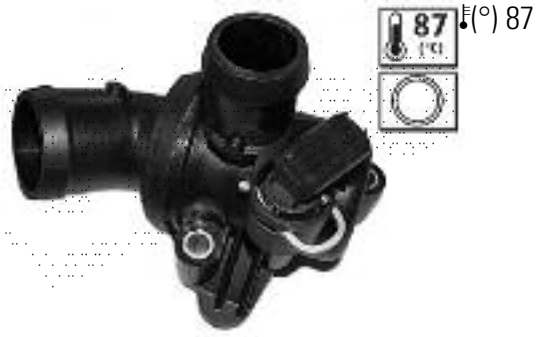

MERCEDES 2662030275

820933 (A)52 (B)28 (C)33, 5 (D)-

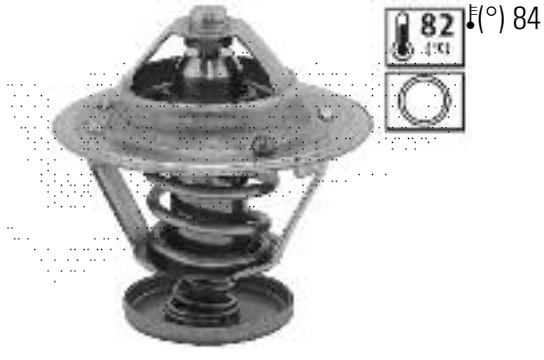

HONDA 19301PZA305

820941 (A)- (B)- (C)- (D)-

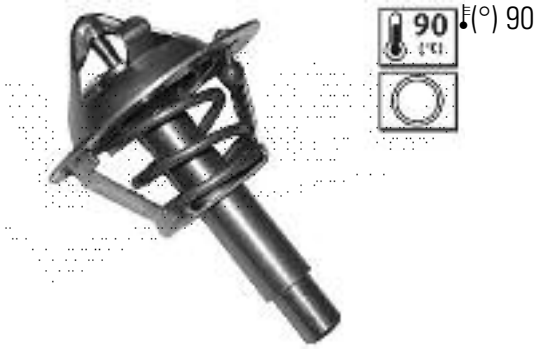

MERCEDES 2712000015

820942 (A)54 (B)29 (C)33, 5 (D)-

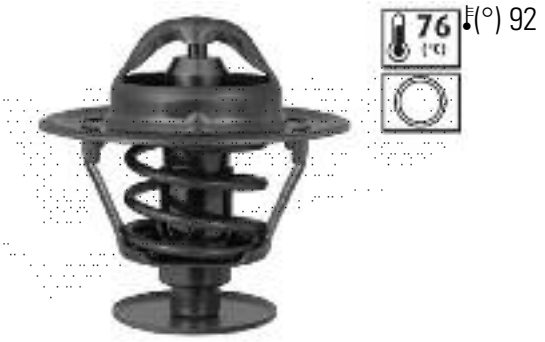

MITSUBISHI MD997605

820959 (A)- (B)- (C)- (D)-

AUDI 06A121111A

820951 (A)- (B)- (C)- (D)-

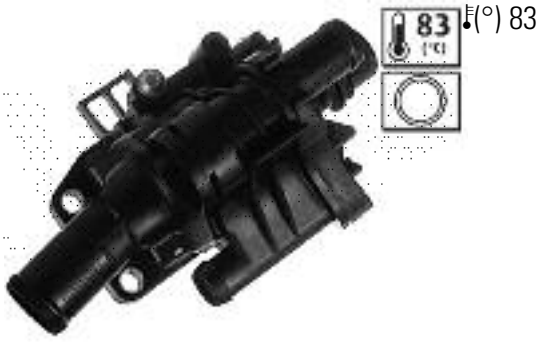

CITROËN 1336X2

820962 (A)- (B)- (C)- (D)-

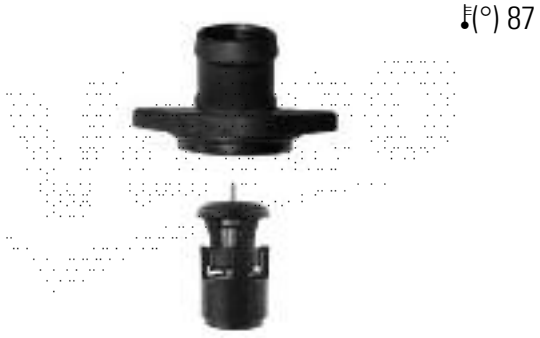

VOLKSWAGEN 032121110B

820955 (A)- (B)- (C)- (D)-

HONDA 19302P5TG00

820963 (A)51, 9 (B)- (C)19 (D)-

PROTON MD972903

820958 (A)67 (B)35 (C)25 (D)8

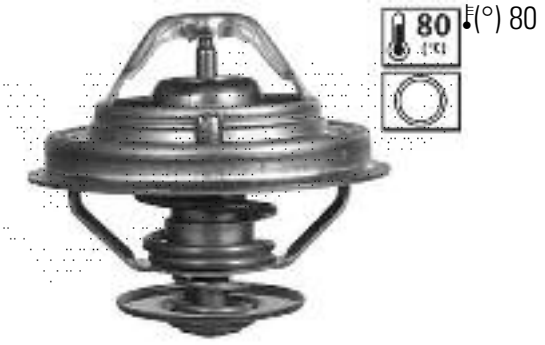

VOLKSWAGEN 022121113

820965 (A)- (B)- (C)- (D)-

ALFA ROMEO 55202510

Valeo 820970 (A)- (B)- (C)- (D)-

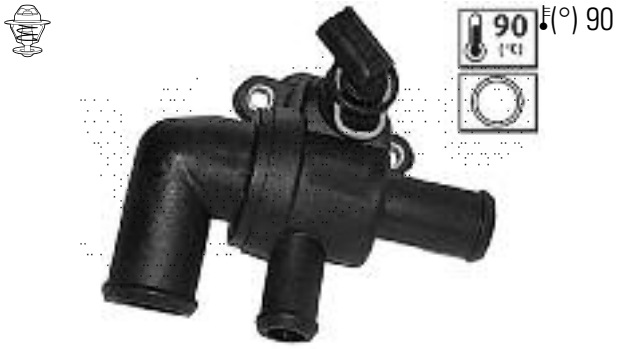

SMART 0003179C010000000

Valeo 820976 (A)- (B)- (C)- (D)-

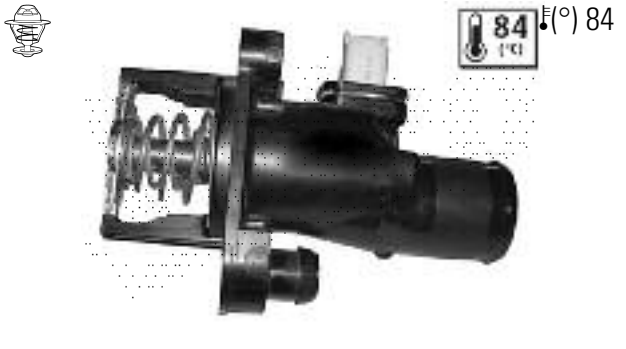

CITROËN 1336X1

Valeo 820972 (A)- (B)- (C)- (D)-

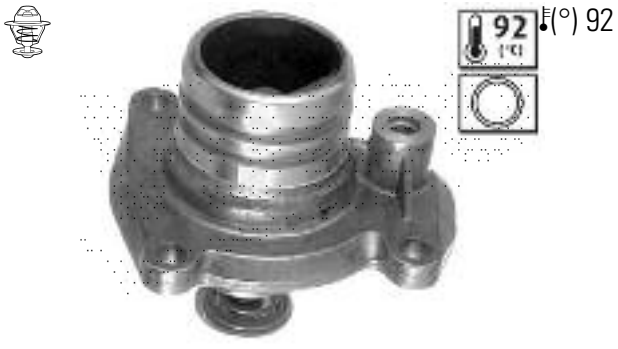

OPEL 1338004

Valeo 820977 (A)- (B)- (C)- (D)-

CITROËN 1336Z2

Valeo 820974 (A)- (B)- (C)- (D)-

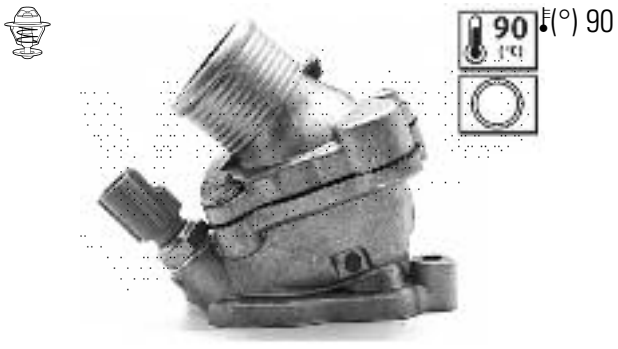

VOLVO 30637217

Valeo 820978 (A)- (B)- (C)- (D)-

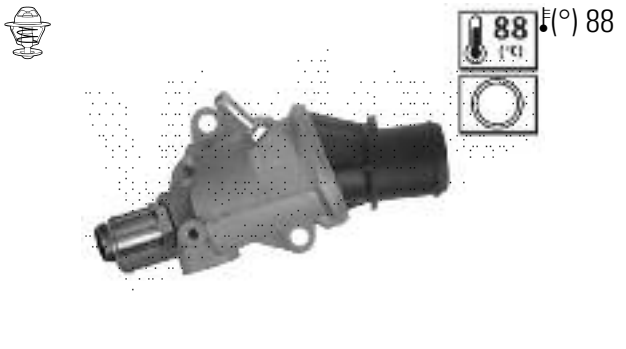

FIAT 46432157

Valeo 820975 (A)54 (B)- (C)22, 5 (D)-

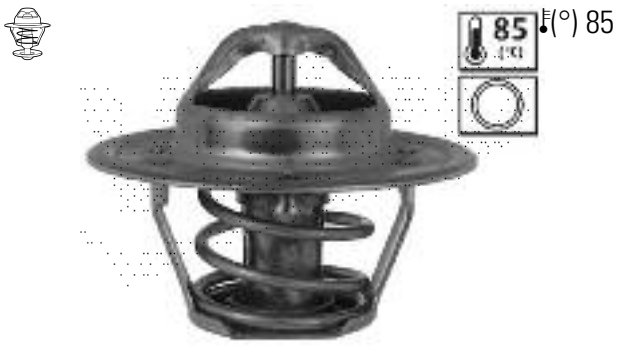

OPEL 1338093

Valeo 820979 (A)- (B)- (C)- (D)-

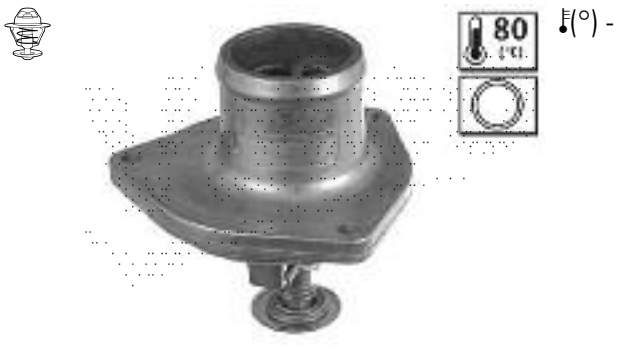

MERCEDES 1192000015

820983 (A)- (B)- (C)- (D)-

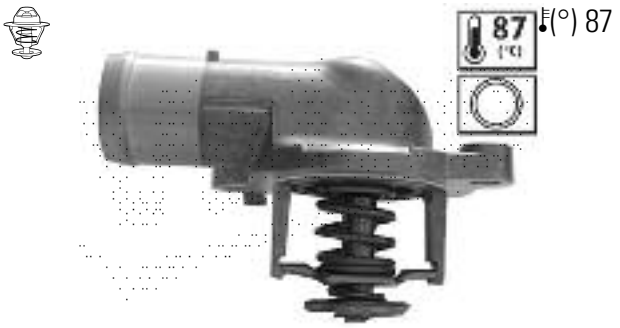

• (°) 87

VOLKSWAGEN 070121114

820989 (A)33 (B)40 (C)- (D)-

• (°) 98

FORD 1302261

820990 (A)51, 9 (B)- (C)19 (D)-

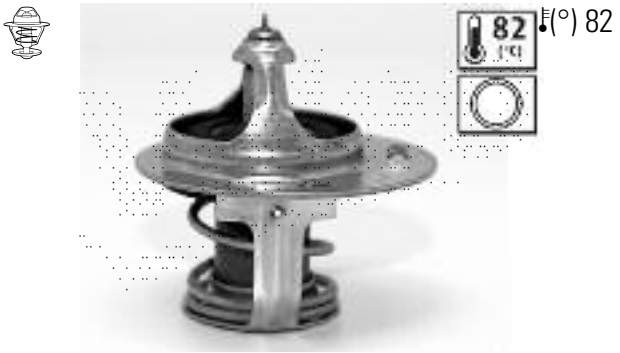

• (°) 82

HYUNDAI 2550024000

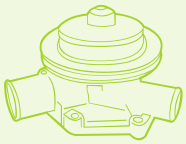

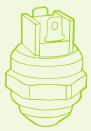

9

Valeo

Valeo

OE	PROD	Valeo
ABARTH		
55204538		**506967**
55221397		**506967**
ALFA ROMEO		
5972332		**700019**
5973319		**506134**
5973319		**506134**
7588802		**700002**
7588856		**700007**
7589337		**700007**
7647004		**700023**
7663320		**700027**
7735919		**700010**
7738223		**700022**
46472179		**700028**
46477022		**700021**
46477717		**820031**
46478033		**819827**
46515970		**506590**
46515972		**506590**
46515972		**506590**
46527104		**820518**
46527105		**820410**
46790294		**820562**
46795667		**820562**
46804051		**506808**
46815125		**506983**
46822435		**820561**
55181512		**820578**
55181513		**820578**
55187822		**700028**
55189843		**820578**
55189845		**820578**
55194768		**820578**
55202176		**820935**
55202510		**820965**
55202885		**820578**
55209993		**506808**
55221397		**506967**
60503687		**819744**
60503687		**819744**
60504210		**700007**
60504230		**819881**
60504230		**819881**
60504838		**820055**

OE	PROD	Valeo
ALFA ROMEO (.../...)		
60506988		**819749**
60506988		**819749**
60513151		**506101**
60513205		**700019**
60513470		**506102**
60516212		**819957**
60516212		**819957**
60523385		**819749**
60533503		**819772**
60533508		**506285**
60533508		**506285**
60533509		**506285**
60533509		**506285**
60534691		**820060**
60536055		**506036**
60536055		**506036**
60542409		**819744**
60543482		**820315**
60543482		**820315**
60555347		**506101**
60555348		**506101**
60555747		**506101**
60556559		**820061**
60557407		**820055**
60561806		**506285**
60561806		**506285**
60562567		**506673**
60562567		**506673**
60564004		**506673**
60564004		**506673**
60564048		**506101**
60564048		**506101**
60564432		**819759**
60565229		**506102**
60565229		**506102**
60565727		**506036**
60565727		**506036**
60573388		**700022**
60579797		**506479**
60579797		**506479**
60585358		**506286**
60585603		**820315**
60585603		**819774**
60586222		**506518**
60586222		**506518**

OE	PROD	Valeo
ALFA ROMEO (.../...)		
60591817		**820055**
60593572		**820315**
60593573		**820232**
60597487		**506286**
60597487		**506286**
60602148		**820401**
60608898		**506525**
60608898		**506525**
60609026		**820412**
60614140		**820404**
60614390		**506036**
60624553		**506036**
60653946		**820402**
60653946		**820402**
60663619		**820796**
60663619		**820796**
60676067		**820926**
60751206		**700007**
60778982		**506692**
60778982		**506692**
60778983		**506692**
60800167		**700019**
60800169		**506134**
60800169		**506134**
60805288		**819882**
60805482		**700007**
60806379		**700021**
60806748		**820315**
60808223		**819774**
60808756		**506560**
60808795		**820406**
60809247		**820031**
60809590		**819964**
60809965		**819827**
60810426		**506335**
60810426		**506335**
60812180		**820031**
60812240		**700022**
60812263		**506559**
60812263		**506559**
60812296		**820407**
60812298		**820155**
60812436		**820066**
60812437		**820403**
60812439		**700027**

OE	PROD	Valeo
ALFA ROMEO (.../...)		
60813343		**820031**
60813687		**700002**
60813751		**700021**
60815559		**506590**
60815681		**820411**
60816475		**820562**
60816881		**820561**
71711725		**506673**
71737962		**506134**
71737965		**506975**
71737976		**506293**
71737986		**506036**
71737988		**506559**
71739401		**506839**
71741078		**506866**
71747983		**506866**
105001106400		**819845**
AUDI		
22121011		**506798**
22121113		**820958**
26121010		**506667**
26906161		**700038**
28121004		**506513**
34121004		**506132**
35121004		**506190**
36121113		**819853**
37121010		**506667**
38121011		**506533**
44121113		**820168**
46121004		**506130**
50121010		**506603**
52121113		**819853**
54121004		**506336**
59121113		**819852**
67121113		**820063**
68121010		**506227**
69121004		**506105**
69121113		**820063**
74121004		**506488**
77121113		**820027**
78121004		**506517**
78121006		**506517**
78121113		**820027**
867959481		**820034**

OE	PROD	Valeo
AUDI (.../...)		
893959481		**820304**
022121011A		**506798**
022121011X		**506798**
025906041A		**700011**
026121005A		**506667**
026121005C		**506667**
026121005E		**506667**
026121005F		**506667**
026121005G		**506667**
026121005H		**506667**
026121005K		**506667**
026121005L		**506667**
026121010A		**506227**
026121010C		**506667**
026121010D		**506227**
026121010DX		**506227**
026121010E		**506667**
028121004V		**506513**
028121004X		**506513**
032121110B		**820962**
034121004A		**506132**
034121004X		**506132**
034121004Y		**506132**
034121005D		**506132**
035121004A		**506190**
035121004AX		**506190**
035121005AX		**506190**
035121005C		**506190**
035121005E		**506190**
035121113B		**820063**
035919369C		**819743**
036121005E		**506576**
036121005P		**506706**
036121005Q		**506576**
036121005S		**506576**
036121005SX		**506576**
036121008G		**506706**
036121008K		**506576**
036121008L		**506576**
036121008LX		**506576**
036121008M		**506576**
036121113B		**819854**
037121005C		**506667**
037121010A		**506667**
037121010B		**506667**

OE	PROD	Valeo
AUDI (.../...)		
037121010C		**506667**
038121011A		**506533**
038121011AX		**506533**
038121011C		**506871**
038121011CX		**506871**
038121011D		**506699**
038121011G		**506872**
038121011GX		**506872**
038121011H		**506699**
038121011J		**506872**
038121011JX		**506872**
038121011K		**506699**
038121011KX		**506699**
03C121005D		**506867**
03C121005K		**506867**
03C121005KX		**506867**
03C121005L		**506867**
03C121005LX		**506867**
03C121005N		**506950**
03C121005NX		**506950**
03C121005R		**506950**
03C121005S		**506867**
03C121005SX		**506867**
03C121008B		**506950**
03C121008BX		**506950**
03C121008E		**506950**
03G121011		**506699**
03G121113		**820058**
03G121113A		**820168**
03G131501		**700424**
03G131501P		**700424**
03L121011		**506974**
03L121011B		**506872**
03L121011BX		**506872**
03L121011X		**506974**
03L131501G		**700424**
03L131501K		**700424**
03L131512BQ		**700436**
03L131512CD		**700436**
045121011B		**506873**
045121011BX		**506873**
045121011F		**506700**
045121011H		**506700**
045121011HX		**506700**
046121004D		**506488**

OE	PROD	Valeo
AUDI (.../...)		
046121004DX		**506130**
046121004X		**506130**
050121010A		**506603**
050121010AV		**506603**
050121010AX		**506603**
050121010C		**506603**
050121010X		**506603**
050121113C		**820171**
052121005A		**506013**
052121005AV		**506013**
052121005AX		**506013**
052121113A		**819854**
054121004A		**506336**
054121004AX		**506336**
055121010X		**506227**
056121113A		**819867**
056121113D		**819868**
058919501A		**700025**
059121004B		**506591**
059121004C		**506591**
059121004D		**506591**
059121004E		**506591**
059121004EX		**506591**
059121113B		**819852**
068121005A		**506667**
068121005B		**506227**
068121005C		**506227**
068121010A		**506667**
069121004X		**506105**
069121005D		**506105**
06A121011C		**506532**
06A121011E		**506532**
06A121011F		**506532**
06A121011HX		**506532**
06A121011L		**506532**
06A121011LX		**506532**
06A121011T		**506532**
06A121011TX		**506532**
06A121012		**506532**
06A121012G		**506532**
06A121012X		**506532**
06A121111A		**820959**
06B121011B		**506790**
06B121011BV		**506790**
06B121011BX		**506790**

OE	PROD	Valeo
AUDI (.../...)		
06B121011C		**506790**
06B121011E		**506790**
06B121011EV		**506790**
06B121011H		**506790**
06B121011HX		**506790**
06B121011L		**506790**
06B121011LX		**506790**
06B121011M		**506790**
06B121011MX		**506790**
06B121011Q		**506790**
06B121111D		**820567**
06B121111G		**820567**
06C121004G		**506781**
06C121004H		**506781**
06E121005D		**506911**
06E121005F		**506911**
06E121005N		**506911**
06E121018A		**506911**
06F121011		**506876**
06F121011X		**506876**
06F121111		**820576**
074121004A		**506488**
074121004F		**506920**
074121004X		**506488**
074121005M		**506920**
074121005MX		**506920**
074121005N		**506920**
074121005NX		**506920**
077121004A		**506644**
077121004F		**506602**
077121004G		**506644**
077121004GX		**506644**
077121004H		**506602**
077121004HX		**506602**
077121004M		**506794**
077121004N		**506794**
077121004P		**506794**
077121113B		**820415**
077121113C		**820557**
078121004A		**506792**
078121004B		**506442**
078121004C		**506442**
078121004CX		**506442**
078121004H		**506517**
078121004HV		**506517**

OE	PROD	Valeo
AUDI (.../...)		
078121004J		**506517**
078121004JV		**506517**
078121004JX		**506517**
078121004L		**506792**
078121004Q		**506517**
078121004R		**506792**
078121006A		**506792**
078121006X		**506517**
078121113C		**820027**
078121113F		**820027**
078121113G		**820414**
191919369A		**820833**
191959481B		**819743**
191959481C		**819769**
1H0959481B		**820035**
1J0959481		**820302**
1J0959481A		**820831**
251919501A		**700036**
251919501D		**700036**
251959481K		**820229**
357919369F		**700063**
823959481F		**819759**
8D0959481B		**820305**
AUTOBIANCHI		
4311105		**819886**
4409254		**819885**
4478951		**819766**
5890406		**506063**
5939200		**506079**
5992746		**819774**
7558930		**820314**
7589135		**819938**
7655732		**820031**
7715242		**506397**
46423351		**506397**
46477717		**820031**
71713727		**506397**
71737960		**506063**
BEDFORD		
94207217		**819966**
94214962		**820506**
94336069		**819966**
97062796		**506346**

OE	PROD	Valeo
BEDFORD (.../...)		
97089891		**820506**
BMW		
11231265085		**820520**
11232241628		**819894**
11510007039		**506110**
11510007042		**506445**
11510007043		**506631**
11510032679		**506289**
11510393338		**506109**
11510393340		**506521**
11510393730		**506662**
11510393731		**506646**
11511258932		**506069**
11511258933		**506069**
11511259660		**506069**
11511271435		**506141**
11511284247		**506278**
11511286355		**506052**
11511286356		**506069**
11511286358		**506052**
11511312129		**506249**
11511312539		**506249**
11511315070		**506862**
11511315118		**506862**
11511315559		**506862**
11511315563		**506862**
11511433712		**506107**
11511433828		**506107**
11511437648		**506107**
11511705236		**506070**
11511705273		**506070**
11511706588		**506141**
11511707192		**506249**
11511711492		**506141**
11511713266		**506800**
11511715292		**506046**
11511719836		**506169**
11511720609		**506169**
11511720881		**506249**
11511720883		**506249**
11511720892		**506249**
11511720893		**506249**
11511721337		**506046**
11511721477		**506052**

OE	PROD	Valeo
BMW (.../...)		
11511722536		**506107**
11511727123		**506110**
11511727468		**506109**
11511730414		**506107**
11511734269		**506110**
11511734595		**506109**
11511734602		**506109**
11511736203		**506631**
11511740241		**506107**
11511741980		**506799**
11511742498		**506445**
11511742517		**506631**
11511742647		**506521**
11511744243		**506107**
11512241641		**506278**
11512242176		**506266**
11512242641		**506278**
11512242675		**506278**
11512242677		**506266**
11512243003		**506289**
11512244333		**506289**
11512245687		**506289**
11512247552		**506646**
11512248996		**506664**
11512354055		**506664**
11517503884		**506107**
11517504040		**506107**
11517511220		**506919**
11517511221		**506919**
11517527799		**506107**
11517527910		**506107**
11517786192		**506663**
11517786736		**506662**
11517788306		**506711**
11517794247		**506711**
11517805192		**820853**
11517806349		**506711**
11519058996		**506141**
11519068606		**506289**
11519069529		**506289**
11519070752		**506069**
11519070755		**506052**
11519070757		**506070**
11519070759		**506169**
11519070761		**506249**

OE	PROD	Valeo
BMW (.../...)		
11519070763		**506046**
11519070765		**506278**
11519071562		**506141**
11519071564		**506266**
11531247125		**820183**
11531253249		**819904**
11531254065		**819887**
11531307737		**819887**
11531315063		**820546**
11531407772		**820546**
11531432881		**820183**
11531432884		**820419**
11531436386		**820427**
11531436823		**820422**
11531437040		**820422**
11531437085		**820418**
11531437526		**820425**
11531702279		**820424**
11531704324		**820425**
11531712043		**820142**
11531713040		**819948**
11531721002		**819949**
11531729720		**820423**
11531729841		**820423**
11531731486		**820426**
11531733803		**820143**
11531739755		**820183**
11531743017		**820419**
11531743542		**820142**
11532241628		**819894**
11532243126		**820064**
11532244151		**820064**
11532246199		**820064**
11532246825		**820064**
11532247019		**820421**
11537509227		**820421**
11537510959		**820930**
11537511083		**820143**
11537511580		**819949**
13621709966		**700019**
13622242184		**700022**
61311364272		**820259**
61311364273		**820205**
61311378073		**820220**
61318360857		**820317**

OE	PROD	Valeo
BMW (.../...)		
61318363677		**820316**
61318376440		**820319**
61318386135		**820318**
CADILLAC		
12618472		**506866**
CHEVROLET		
90325660		**506007**
92149009		**506866**
92226211		**506856**
93284724		**506309**
96351969		**506007**
96518977		**506659**
96930074		**506649**
96990997		**506648**
CHRYSLER		
4448878		**506454**
4483453		**506455**
4494470		**819875**
4495721		**820568**
4556541		**506616**
4573560		**819875**
4621172		**506455**
4621489		**506478**
4663296		**506539**
4663732		**506803**
4667660		**506538**
4694307		**506605**
4720432		**820499**
4720598		**700022**
4741778		**820499**
4778975		**820059**
4864566		**506692**
5278144		**820568**
46815125		**506983**
55221397		**506967**
03L131501R		**700448**
4573560AB		**820568**
4573560AC		**820568**
4654392AB		**506454**
4663732AC		**506803**
4667660AB		**506538**
4694307AB		**506605**

OE	PROD	Valeo
CHRYSLER (.../...)		
4694307AC		**506605**
4792237AB		**820589**
4973117AA		**820568**
5010898AA		**506454**
5278144AA		**820568**
68000693AB		**506699**
MD973025		**506539**
MD973940		**506408**
MD997244		**506408**
MD997310		**819875**
CITRÖEN		
1201E0		**506291**
1201E7		**506918**
24246		**700019**
24261		**700039**
120137		**506178**
120140		**506292**
120145		**506032**
120152		**506117**
120155		**506291**
120158		**506290**
120160		**506014**
120161		**506029**
120163		**506011**
120166		**506035**
120167		**506117**
120170		**506582**
120191		**506117**
120193		**506530**
120195		**506669**
120196		**506670**
120197		**506290**
120198		**506531**
120723		**506035**
120725		**506290**
126410		**819828**
126411		**819764**
126414		**819757**
126415		**819744**
126416		**819772**
126417		**819770**
126418		**819773**
126421		**819761**
126423		**819751**

OE	PROD	Valeo
CITRÖEN (.../...)		
126425		**819747**
126426		**819752**
126427		**819754**
126430		**820030**
126431		**819753**
126432		**819773**
126433		**820031**
126434		**819827**
126435		**819774**
126436		**819755**
126437		**819752**
126438		**819747**
126440		**819752**
126443		**819753**
126444		**819755**
126445		**819747**
133747		**819900**
133765		**819838**
133772		**700001**
133797		**819889**
133803		**819896**
133804		**819936**
133809		**700000**
133812		**819929**
133818		**819930**
133821		**819897**
133823		**819950**
133825		**819952**
133826		**819934**
133827		**820834**
133834		**700008**
133837		**819946**
133838		**819953**
133839		**820471**
133846		**819956**
133855		**700056**
133873		**820131**
133878		**700017**
133890		**820432**
133897		**700054**
161859		**700414**
1201E3		**506035**
5428849		**819849**
1201E4		**506290**
75492645		**819759**

OE	PROD	Valeo
CITRÖEN (.../...)		
91500723		**819900**
91514046		**819757**
91517674		**819773**
93501145		**819937**
95492854		**819761**
95495311		**819838**
95495385		**819770**
95548541		**506178**
95576325		**819770**
95588361		**819915**
95619748		**506178**
95625017		**506029**
95630939		**819772**
95631379		**700039**
95632734		**819755**
95638684		**819747**
95641149		**506014**
95643824		**506014**
95650955		**506117**
95655207		**506011**
95656566		**506011**
95656567		**506029**
95656568		**506014**
95656569		**506014**
95666768		**506117**
96005005		**819936**
96006231		**819897**
96009503		**819751**
96015494		**819761**
96019305		**819773**
96020348		**819896**
96029641		**819759**
96041919		**819929**
96047088		**506291**
96064561		**819752**
96064750		**819747**
96080220		**819930**
96085909		**819754**
96101599		**819930**
96108092		**819934**
96138637		**819753**
96159513		**819952**
96160901		**819950**
97517097		**819889**
97521368		**506032**

OE	PROD	Valeo
CITRÖEN (.../...)		
1201E5		**506595**
1201E6		**506290**
7910016560		**819946**
9401201400		**506292**
9451001263		**506035**
9608564280		**506290**
9617376980		**506035**
9676936180		**700441**
9678163380		**700441**
9678257280		**700451**
1201E8		**506719**
0345G7		**700440**
1201A1		**506530**
1201A2		**506595**
1201A3		**506582**
1201A4		**506117**
1201A5		**506596**
1201A6		**506643**
1201A7		**506291**
1201A8		**506574**
1201C4		**506575**
1201C5		**506291**
1201C6		**506291**
1201C7		**506643**
1201C9		**506514**
1201F4		**506918**
1201F5		**506918**
1201F9		**506714**
1201G0		**506704**
1201G2		**506721**
1201G5		**506918**
1201G6		**506952**
1201G8		**506714**
1201G9		**506715**
1201H0		**506852**
1201H5		**506514**
1201H7		**506978**
1201J0		**506852**
1201J2		**506918**
1201J4		**506961**
1201J6		**506978**
1201J9		**526006**
1201K0		**506961**
1201K1		**506918**
1201K4		**526006**

OE	PROD	Valeo
CITRÖEN (.../...)		
1201L2		**506918**
1201L3		**506852**
1201L9		**506983**
1336F9		**819954**
1336J1		**820433**
1336Q1		**820434**
1336Q2		**820430**
1336X1		**820976**
1336X2		**820951**
1336Z2		**820977**
1338A0		**820431**
1338A5		**700021**
1338A6		**700054**
1338C1		**700055**
1338C7		**700028**
1338C8		**819897**
1338F9		**700028**
1618N6		**700411**
1618N7		**700410**
1618N8		**700413**
1618NQ		**700434**
1618NR		**700414**
1618PF		**700413**
1618PS		**700441**
1618QF		**700411**
16287T		**700401**
1628CF		**700404**
1628JZ		**700405**
1628WR		**700408**
1628WV		**700406**
1628XV		**700407**
1920C4		**700014**
1920K9		**700015**
DACIA		
6000039201		**506041**
6001545345		**506019**
7700858802		**820009**
7700872554		**820025**
7701348068		**819924**
7701475995		**506863**
7701478018		**506573**
7701478031		**506863**
7701478830		**506993**
8200146298		**506573**

OE	PROD	Valeo
DACIA (.../...)		
8200374994		**820537**
8200428447		**506655**
8200582675		**506655**
8200660882		**820138**
8200772985		**820025**
210105296R		**506655**
210108845R		**506780**
DAEWOO		
3038094		**819935**
90220568		**506005**
90284802		**506003**
90466343		**506309**
92061279		**820435**
92062728		**820437**
92064250		**506309**
92065969		**506309**
92067408		**820437**
92226211		**506856**
93284724		**506309**
94580182		**820438**
96143939		**820262**
96181814		**819759**
96182871		**506649**
96230587		**506953**
96282726		**820535**
96350799		**506647**
96351284		**506648**
96352648		**506647**
96352649		**506648**
96352650		**506649**
96518977		**506659**
96563958		**506659**
96930074		**506649**
96990997		**506648**
5094013802		**506648**
6062030275		**819970**
17400A60D01000		**506659**
17400A60D02000		**506659**
17670A78B01000		**820438**
90325660A		**506007**
DAIHATSU		
1610080001		**506852**
1610080003		**506852**

OE	PROD	Valeo
DAIHATSU (.../...)		
1610080007		**506852**
1610019016000		**506410**
1610019036000		**506423**
1610028020000		**506412**
1610087108000		**506391**
1610087109000		**506390**
1610087182000		**506391**
1610087183000		**506390**
1610087184000		**506391**
1610087185000		**506390**
1610097234000		**506852**
1634187208000		**820042**
1634187283000		**820042**
1634187583000		**820042**
1634187780000		**820438**
1634187785000		**819842**
1634187789000		**819944**
1634187793000		**820042**
1634187795000		**820042**
9004833041000		**820439**
9004833047000		**820170**
9004833055000		**820440**
9004833056000		**820170**
9004833078000		**820933**
9004833088000		**820597**
9004833092000		**820933**
9091603037000		**819942**
9091603040000		**819943**
9091603046000		**820510**
9091603055000		**819875**
9091603069000		**820510**
9091603083000		**820172**
9091603102000		**820442**
9091603103000		**820443**
16100B9010		**506707**
DODGE		
4694307AB		**506605**
5047138AB		**526006**
68000693AB		**506699**
MN187244		**526006**
EBRO		
999108		**506360**

OE	PROD	Valeo
F.S.O. / POLSKI		
63337		**819950**
4355846		**819885**
FIAT		
4186267		**506098**
4269431		**506492**
4306243		**820444**
4311105		**819886**
4317492		**819886**
4331825		**506098**
4332090		**506352**
4332336		**506352**
4336009		**506063**
4360904		**819837**
4364117		**506860**
4384129		**506079**
4405285		**506508**
4408201		**506075**
4409254		**819885**
4414600		**700002**
4424394		**819765**
4440367		**819837**
4448131		**700002**
4458134		**506167**
4463193		**506383**
4465144		**506508**
4466193		**506383**
4468320		**819825**
4475635		**819825**
4477081		**819767**
4478951		**819766**
4714636		**506106**
4720031		**506248**
4823810		**506474**
4828120		**819903**
4850371		**700021**
5548541		**506178**
5882689		**506098**
5882838		**506327**
5890406		**506063**
5894255		**506075**
5894394		**506859**
5894580		**506075**
5894582		**506572**
5894583		**506119**

OE	PROD	Valeo
FIAT (.../...)		
5896809		**506340**
5896813		**506561**
5896814		**506559**
5896817		**506561**
5896818		**506560**
5896819		**506560**
5896820		**506560**
5896821		**506560**
5896823		**506561**
5924366		**506508**
5934064		**819828**
5936404		**506075**
5939200		**506079**
5951985		**819762**
5954579		**819939**
5955266		**819958**
5958828		**819775**
5960469		**506075**
5964284		**506327**
5972332		**700019**
5973319		**506134**
5984047		**506860**
5990701		**506508**
5992593		**506075**
5992746		**819774**
5996705		**506327**
5999536		**819940**
5999818		**819963**
7303009		**506106**
7303050		**506248**
7533502		**506572**
7540318		**819882**
7540964		**506331**
7545520		**819765**
7545958		**819938**
7547977		**700021**
7548005		**700041**
7555039		**506559**
7574887		**506167**
7574911		**819940**
7575827		**506144**
7576281		**819775**
7576327		**820232**
7580642		**820472**
7580753		**506075**

OE	PROD	Valeo
FIAT (.../...)		
7580755		**506572**
7580756		**506075**
7581200		**819960**
7581201		**819960**
7581916		**819940**
7588802		**700002**
7588856		**700007**
7588882		**700002**
7588883		**700041**
7589065		**506115**
7589135		**819938**
7589337		**700007**
7589454		**820474**
7589824		**819963**
7591297		**700002**
7596228		**820315**
7597569		**506561**
7597659		**819963**
7608844		**506562**
7613245		**819964**
7613578		**820474**
7614475		**819964**
7615234		**819882**
7615235		**819896**
7615921		**506075**
7617364		**506268**
7618716		**819963**
7625346		**819963**
7625347		**819963**
7626604		**506559**
7626623		**819959**
7628332		**820473**
7628417		**819958**
7628799		**819775**
7629033		**506560**
7629228		**506559**
7630343		**506119**
7630978		**819958**
7631379		**506560**
7631494		**506561**
7633470		**506340**
7633560		**506508**
7634347		**820159**
7634348		**820159**
7642522		**819827**

OE	PROD	Valeo
FIAT (.../...)		
7648451		**506559**
7649055		**819885**
7655732		**820031**
7656567		**819882**
7663320		**700027**
7671373		**819940**
7671375		**819940**
7671810		**506508**
7692278		**506559**
7692285		**506561**
7692549		**506559**
7692552		**506559**
7692554		**506144**
7692555		**506559**
7693569		**506561**
7693570		**506560**
7693966		**506562**
7694229		**506859**
7694408		**506560**
7694426		**506560**
7695555		**506123**
7695951		**820232**
7696083		**506340**
7696226		**506560**
7696535		**820444**
7701137		**506296**
7703893		**506115**
7715051		**506559**
7715242		**506397**
7718184		**820457**
7719918		**506119**
7719921		**506572**
7720987		**506299**
7720988		**506519**
7721399		**820462**
7722107		**820160**
7723325		**820150**
7724414		**506294**
7725918		**820466**
7727042		**820403**
7727854		**700002**
7728057		**819774**
7729959		**820162**
7729960		**820163**
7730098		**820066**

OE	PROD	Valeo
FIAT (.../...)		
7735919		**700010**
7737200		**506299**
7737201		**506519**
7737257		**506119**
7738223		**700022**
7738581		**819827**
7738582		**820031**
7741883		**820067**
7744397		**506299**
7745216		**820030**
7747386		**506123**
7747388		**506335**
7748867		**819774**
7750698		**506379**
7752928		**506524**
7759596		**820539**
7762924		**506597**
7762925		**506590**
7762926		**506516**
7762986		**506645**
7770032		**506075**
7770041		**506572**
7770236		**820463**
7770416		**820465**
7778653		**820433**
7778655		**820433**
7778980		**700018**
7781232		**506298**
7783006		**506296**
7783009		**506859**
7784974		**506075**
7784975		**506119**
7784977		**506299**
7784978		**506075**
7784981		**506572**
7784987		**506519**
7784988		**506299**
7789135		**819938**
7791178		**820447**
7794132		**820464**
7794218		**820449**
46400058		**506523**
46407762		**506559**
46407766		**506559**
46408312		**506293**

OE	PROD	Valeo
FIAT (.../...)		
46409134		**506144**
46409136		**506562**
46409200		**506670**
46409201		**506669**
46410549		**506379**
46410551		**506563**
46410562		**506695**
46411298		**820453**
46412338		**506340**
46413969		**820030**
46414596		**700024**
46417962		**820452**
46422512		**506598**
46423351		**506397**
46432157		**820978**
46432896		**820451**
46437911		**506524**
46437912		**506379**
46437913		**506670**
46437914		**506669**
46437915		**506524**
46437916		**506379**
46440924		**820157**
46444355		**506523**
46445405		**506298**
46455054		**819963**
46459502		**820797**
46464991		**820446**
46465699		**820446**
46466123		**820460**
46469865		**700028**
46472179		**700028**
46475733		**820156**
46477022		**700021**
46477717		**820031**
46478033		**819827**
46513506		**820446**
46514952		**820156**
46514953		**820156**
46515970		**506590**
46515971		**506597**
46517771		**820157**
46517772		**820158**
46518600		**820157**
46518601		**820158**

OE	PROD	Valeo
FIAT (.../...)		
46520219		**819774**
46520401		**506686**
46520785		**820449**
46522664		**820454**
46523118		**819938**
46523733		**820446**
46526243		**506640**
46531183		**506397**
46546375		**820411**
46559840		**820837**
46737644		**820559**
46742168		**506294**
46757574		**506712**
46758434		**820467**
46758586		**820468**
46776216		**820446**
46776217		**820454**
46785392		**820562**
46790294		**820562**
46790296		**820562**
46795667		**820562**
46800798		**820586**
46804051		**506808**
46804764		**820587**
46805736		**506640**
46815125		**506716**
46819138		**506716**
55180041		**820563**
55184080		**506640**
55184081		**506686**
55186478		**820577**
55189845		**820578**
55190049		**820588**
55194029		**820935**
55194271		**820934**
55194768		**820578**
55202176		**820935**
55202510		**820965**
55202885		**820578**
55204538		**506967**
55209993		**506808**
55221397		**506967**
60513205		**700019**
60586222		**506518**
60602148		**820401**

OE	PROD	Valeo
FIAT (.../...)		
60608898		**506525**
60609025		**820402**
60620386		**820448**
60653946		**820402**
60805482		**700007**
60806379		**700021**
60808116		**506101**
60809209		**506335**
60811328		**506518**
60812410		**820401**
60814382		**820402**
60814609		**506590**
60816231		**506525**
60816681		**820562**
71713727		**506397**
71713728		**506598**
71719665		**506519**
71719670		**506859**
71719678		**506296**
71737960		**506063**
71737962		**506134**
71737963		**506167**
71737964		**506123**
71737965		**506975**
71737967		**506296**
71737971		**506299**
71737976		**506293**
71737978		**506695**
71737979		**506379**
71737993		**506292**
71739401		**506839**
71739779		**506837**
71742124		**506975**
71745026		**506716**
82435465		**819765**
82436409		**819826**
82436410		**819774**
82465533		**819774**
95548541		**506178**
98430541		**506295**
98435125		**506297**
98435994		**506302**
98438356		**506304**
98473452		**506514**
99440717		**506514**

OE	PROD	Valeo
FIAT (.../...)		
99440930		**506297**
99455420		**700028**
99459759		**506474**
500300476		**506304**
500329622		**820432**
500382599		**700028**
504033770		**506864**
504083122		**506514**
504102572		**506961**
504248581		**506961**
1307077080		**820242**
1307270080		**820459**
1307274080		**820538**
9150072380		**819900**
9401201400		**506292**
9406475080		**819747**
9463623088		**506719**
9563868480		**819747**
9565656788		**506029**
9566945688		**506117**
9566950080		**506530**
9567521488		**506117**
9569147388		**506575**
9569623880		**506291**
9601842680		**700000**
9604708880		**506291**
9606456180		**819752**
9613147080		**700015**
9616090180		**819950**
9616090280		**820471**
9616455480		**700008**
9618572580		**700017**
9619452580		**700401**
9621000680		**700056**
9627667988		**506574**
9629110980		**506291**
9629968880		**819752**
9630066680		**820431**
9630066780		**820434**
9631000880		**700054**
9632562080		**700055**
9635651080		**700405**
9636777280		**700054**
9640341280		**700406**
9640601280		**506918**

OE	PROD	Valeo
FIAT (.../...)		
9654514780		**506715**
9670557580		**506918**
9684319880		**506978**
FORD		
801587		**819847**
1001889		**506484**
1001993		**820547**
1002788		**820168**
1002789		**506667**
1007754		**820565**
1018799		**820064**
1020538		**506472**
1020567		**506581**
1020988		**506529**
1023645		**506529**
1031279		**506301**
1031369		**506667**
1031881		**820168**
1032249		**820065**
1032940		**506692**
1047284		**700026**
1059843		**506484**
1059953		**819854**
1079085		**506641**
1086282		**820475**
1089795		**506809**
1094596		**506604**
1096283		**820542**
1096556		**506789**
1100635		**506699**
1104115		**506641**
1116996		**506693**
1119280		**820989**
1126030		**506009**
1126032		**506858**
1126041		**506008**
1131809		**506789**
1131878		**506641**
1132355		**506641**
1138318		**506604**
1142005		**506694**
1142427		**506694**
1143851		**506693**
1146965		**506789**

OE	PROD	Valeo
FORD (.../...)		
1147585		**506714**
1148077		**700407**
1211553		**820565**
1229571		**506809**
1232499		**506719**
1233202		**506642**
1233209		**506012**
1233218		**506155**
1250685		**506700**
1302261		**820989**
1303374		**820565**
1303377		**820564**
1306001		**820564**
1306004		**820565**
1308453		**506789**
1313167		**506694**
1313841		**820951**
1313842		**506715**
1313847		**700409**
1317021		**506284**
1318354		**506287**
1320085		**506047**
1326374		**506472**
1333611		**700413**
1336008		**506694**
1338675		**700444**
1341835		**506693**
1347102		**506693**
1348621		**506714**
1350461		**506472**
1351130		**506715**
1353152		**700412**
1358178		**820989**
1359942		**506714**
1361486		**506694**
1363591		**700413**
1364152		**506694**
1364681		**506715**
1366614		**506714**
1376162		**506893**
1381796		**506955**
1385827		**506789**
1388504		**506325**
1406479		**506893**
1434347		**506694**

OE	PROD	Valeo
FORD (.../...)		
1439414		**700444**
1459215		**506700**
1472378		**820290**
1472867		**506893**
1509953		**819854**
1517728		**506284**
1517732		**506604**
1517754		**506287**
1518123		**506155**
1518910		**506047**
1518911		**506581**
1526689		**700444**
1535462		**506967**
1535466		**506967**
1538706		**506983**
1559259		**506978**
1566241		**506283**
1584043		**506694**
1612191		**819839**
1634617		**820051**
1635905		**819853**
1639283		**700021**
1646398		**819784**
1651816		**506047**
1652990		**819785**
1657685		**700046**
1658103		**820137**
1663819		**820051**
1668305		**820069**
1669949		**700036**
1674083		**506301**
1682007		**700434**
1682736		**700413**
1688697		**506893**
1701764		**700442**
1726786		**700442**
1745685		**700442**
1836229		**700434**
1953221		**506733**
1953232		**820176**
1953639		**700042**
1956976		**820476**
1957220		**506836**
1957271		**820178**
1960039		**506733**

OE	PROD	Valeo
FORD (.../...)		
1960294		**506836**
1961674		**820181**
1962054		**506836**
1962610		**506733**
4188498		**820793**
4537712		**700026**
5004976		**506247**
5004977		**506247**
5004995		**506858**
5005058		**506009**
5005192		**506173**
5005193		**506173**
5005197		**506001**
5008470		**506000**
5009823		**506170**
5010875		**506009**
5011013		**506165**
5011846		**506158**
5011863		**506858**
5011864		**506009**
5012322		**506165**
5012359		**506858**
5012773		**506155**
5013267		**506009**
5013268		**506858**
5013274		**506858**
5013320		**506008**
5018437		**506000**
5019394		**506088**
5020242		**506529**
5020437		**506012**
5020651		**506008**
5020713		**506642**
5023817		**506165**
5024297		**506301**
5024545		**506155**
5024603		**506001**
5024638		**506170**
5025607		**506284**
5025908		**506012**
5028472		**506287**
6039328		**506001**
6058444		**819848**
6058836		**700003**
6065711		**506858**

OE	PROD	Valeo
FORD (.../...)		
6100629		**819854**
6100630		**819854**
6106381		**820525**
6129739		**819864**
6142676		**819785**
6144361		**819786**
6145143		**700034**
6146864		**700004**
6163559		**820068**
6169774		**820051**
6176366		**819847**
6182480		**819839**
6186463		**819785**
6186464		**819785**
6189520		**506300**
6190786		**820213**
6193368		**700059**
6201207		**820134**
6201247		**820134**
6457409		**506047**
6489740		**820211**
6542383		**820069**
6588962		**820051**
6683522		**506127**
6866389		**820051**
6878045		**506283**
6994257		**820068**
7001605		**820214**
7001606		**820213**
7001607		**820213**
7001608		**819784**
7001609		**819784**
7001610		**820210**
7001611		**819785**
7072641		**506673**
7072643		**820059**
7087382		**506047**
7087383		**506300**
7158126		**700061**
7210733		**820829**
7215818		**820035**
7334678		**820051**
FORD USA		
3396916		**506544**

OE	PROD	Valeo
FORD USA (.../...)		
3396917		**506536**
6758566		**820478**
GALLOPER		
2510033112		**506617**
2510033120		**506617**
2510033130		**506617**
2510033132		**506617**
2510042541		**506736**
2510042700		**506736**
2550033050		**820963**
2550033060		**820963**
HONDA		
19110634405		**506418**
19300611005		**820044**
19300657000		**820044**
19300657003		**820044**
19300657811		**820044**
19300657812		**820044**
19300692003		**820044**
19300692013		**820044**
37760634005		**820238**
19200P01003		**506045**
19200P01004		**506045**
19200P08003		**506441**
19200P08004		**506441**
19200P0A003		**506321**
19200P0BA01		**506321**
19200P0GA01		**506540**
19200P13000		**506443**
19200P13003		**506443**
19200P14A00		**506322**
19200P14A01		**506322**
19200P1GE02		**506679**
19200P1JE02		**506045**
19200P2AA01		**506661**
19200P2AA02		**506661**
19200P2AA03		**506661**
19200P5TG00		**506320**
19200P5TG01		**506320**
19200P72013		**506680**
19200P75003		**506894**
19200P7A003		**506679**
19200PA1020		**506033**

OE	PROD	Valeo
HONDA (.../...)		
19200PA1030		**506033**
19200PA1405		**506033**
19200PB2000		**506081**
19200PD2000		**506425**
19200PD2415		**506425**
19200PD2660		**506425**
19200PD6000		**506425**
19200PD6405		**506425**
19200PD6415		**506425**
19200PDAE01		**506321**
19200PDFE01		**506661**
19200PE0515		**506028**
19200PE0660		**506028**
19200PE0661		**506028**
19200PH7003		**506540**
19200PLMA01		**506811**
19200PM3003		**506045**
19200PM3004		**506045**
19200PM3013		**506045**
19200PM3014		**506045**
19200PNA003		**506810**
19200PNLE01		**506810**
19200PO1003		**506045**
19200PT0003		**506321**
19200PT0013		**506321**
19200PT2013		**506943**
19200PWA003		**506812**
19200RBB003		**506810**
19200RBB013		**506810**
19200RBDE01		**506878**
19200RFE003		**506810**
19200RNAA01		**506895**
19200RSRE01		**506878**
19200RSRE02		**506878**
19210PD2505		**506425**
19210PD6305		**506425**
19210PD6505		**506425**
19300P08003		**820076**
19300PB2003		**820044**
19300PB2004		**820044**
19300PB2013		**820044**
19300PB2014		**820044**
19300PB2023		**820044**
19300PB2024		**820044**
19300PB2811		**820544**

OE	PROD	Valeo
HONDA (.../...)		
19300PB2813		**819874**
19300PB2815		**820544**
19300PB2816		**820544**
19300PB2817		**820544**
19300PE0013		**820076**
19300PE0014		**820076**
19300PE0024		**820076**
19300PH7004		**820165**
19300PH7014		**820165**
19300PH7024		**820165**
19300PH9003		**819942**
19300PH9004		**819942**
19300PH9811		**820963**
19300PH9812		**820963**
19300PL2004		**820076**
19300PM3003		**820165**
19300PM3004		**820165**
19300PR7A01		**820196**
19300PR7A02		**820196**
19300PT0003		**820076**
19300PT0004		**820076**
19301P07316		**820165**
19301P08000		**820165**
19301P08305		**820165**
19301P08306		**820165**
19301P08315		**820165**
19301P08316		**820165**
19301P13305		**820196**
19301P13306		**820196**
19301P1K307		**820195**
19301P8CA10		**820514**
19301P8CA11		**820514**
19301P8EA10		**820165**
19301PAA306		**820165**
19301PDAE01		**820165**
19301PHM305		**820549**
19301PLC305		**820165**
19301PLCA00		**820165**
19301PLCA05		**820165**
19301PLZD00		**820152**
19301PR7305		**820196**
19301PR7306		**820196**
19301PR7307		**820196**
19301PR7309		**820196**
19301PWA305		**820933**

OE	PROD	Valeo
HONDA (.../...)		
19301PZA305		**820933**
19301RBD305		**820196**
19302P5TG00		**820955**
19302P5TG01		**820955**
37760P00003		**820334**
37760P00004		**820334**
37760PB2003		**820238**
37773PB1003		**820333**
37773PH1621		**820330**
37773PH2004		**820330**
37773PT3A01		**820335**
HYUNDAI		
2510002501		**506777**
2510002502		**506777**
2510002555		**506777**
2510002577		**506897**
2510021000		**506406**
2510022010		**506406**
2510022012		**506406**
2510022650		**506406**
2510023003		**506818**
2510023010		**506818**
2510023530		**506818**
2510024030		**506406**
2510024040		**506406**
2510024060		**506406**
2510025100		**506814**
2510026015		**506813**
2510026016		**506813**
2510026550		**506813**
2510026900		**506813**
2510026901		**506813**
2510026902		**506813**
2510027000		**506814**
2510027400		**506922**
2510032020		**506778**
2510032033		**506405**
2510032502		**506407**
2510032568		**506407**
2510033111		**506617**
2510033112		**506617**
2510033120		**506617**
2510033130		**506617**
2510033132		**506617**

OE	PROD	Valeo
HYUNDAI (.../...)		
2510035030		**506408**
2510037102		**506819**
2510037200		**506819**
2510037201		**506819**
2510037202		**506819**
2510038002		**506816**
2510039800		**506935**
2510039802		**506935**
2510042000		**506778**
2510042541		**506736**
2510042700		**506736**
2511129000		**506117**
2511129001		**506117**
2536033010		**820337**
2536033011		**820337**
2536033101		**820337**
2536037100		**820336**
2550002500		**820510**
2550002550		**820438**
2550011200		**820990**
2550021210		**820963**
2550021220		**820963**
2550022050		**820481**
2550022200		**820192**
2550022250		**820481**
2550022600		**819846**
2550023001		**820193**
2550023010		**820193**
2550024000		**820990**
2550027000		**820555**
2550033020		**820963**
2550033040		**820963**
2550033050		**820963**
2550033060		**820963**
2550035531		**820553**
2550035540		**820553**
2550037200		**820553**
2551129000		**819950**
0K41015171A		**820481**
251002A000		**506976**
251002A001		**506976**
251002B000		**506977**
251004A000		**506826**
255003C100		**820511**

OE	PROD	Valeo
INFINITI		
B1010JK20A		**506924**
INNOCENTI		
4409254		**819885**
5890406		**506063**
5992746		**819774**
7576281		**819775**
7625346		**819963**
7649055		**819885**
7655732		**820031**
7671373		**819940**
7725918		**820466**
7784981		**506572**
46409136		**506562**
46410562		**506695**
46437911		**506524**
46437915		**506524**
46477717		**820031**
71737960		**506063**
71737978		**506695**
ISUZU		
8970898910		**820506**
IVECO		
4448131		**700002**
7303009		**506106**
7303050		**506248**
7303615		**819903**
98435994		**506302**
98438356		**506304**
98439407		**506304**
99438900		**506304**
99440728		**506106**
99448066		**506304**
99479817		**506879**
500300476		**506304**
500329622		**820432**
500382599		**700028**
504033770		**506864**
800362859		**506879**
JAGUAR		
AJ82600		**820548**
AJ84817		**506820**

OE	PROD	Valeo
JAGUAR (.../...)		
AJ86484		**820548**
AJ88417		**506913**
AJ88912		**506913**
C2A1206		**506913**
C2C40183		**700410**
C2C40184		**700411**
EBC3621		**820480**
JDE1275		**820174**
JDE3314		**700410**
JDE3315		**700411**
JDE8785		**700411**
XR813290		**506821**
XR815090		**506820**
JEEP		
4626054		**506456**
4626215		**506446**
4778975		**820059**
4864566		**506692**
83501426		**819851**
4694307AB		**506605**
5012366AA		**506795**
5012366AB		**506795**
5012366AC		**506795**
5047138AB		**526006**
53010552AA		**820568**
53020873AB		**506823**
53020873AC		**506823**
53021187AA		**506823**
53022189AA		**506823**
53022189AB		**506823**
53022189AC		**506823**
68000693AB		**506699**
68045797AA		**506823**
MN187244		**526006**
KIA		
2510002566		**506897**
2510023530		**506818**
2510026902		**506813**
2510027000		**506814**
2510027400		**506922**
2510033132		**506617**
2510037102		**506819**
2510037201		**506819**

OE	PROD	Valeo
KIA (.../...)		
2510037202		**506819**
2510038002		**506816**
2510042541		**506736**
2510042700		**506736**
2550002500		**820510**
2550023001		**820193**
2550027000		**820555**
2550033050		**820963**
2550033060		**820963**
2550037200		**820553**
0FE1H15010H		**506685**
0K01315171		**819943**
0K05415171		**820072**
0K20115171		**820990**
0K24715010A		**506825**
0K24715010B		**506825**
0K24715010C		**506825**
0K2A115171		**820990**
0K2C015171		**819943**
0K2C015171A		**820963**
0K30C15010A		**506399**
0K30E15171		**819943**
0K41015171A		**820481**
0K93015010A		**506399**
0K93715010		**506401**
0K9FC15171		**820191**
251002A000		**506976**
251002A001		**506976**
251002B000		**506977**
251002X200		**506817**
251002Y000		**506825**
251004A000		**506826**
255003C100		**820511**
KE5D315171		**820191**
KHE4115171		**820990**
KKY0115010D		**506399**
MHE4115171		**820990**
LADA		
21011306010		**819913**
21011307010		**506148**
21081307010		**506151**
21083808800		**819759**
21211306010		**820791**
210951306015		**819897**

OE	PROD	Valeo
LADA (.../...)		
210951307010		**506290**
212151306015		**819950**
212151307010		**506117**
2101130601001		**819913**
2108130601010		**819912**
LANCIA		
4336009		**506063**
4440367		**819837**
4828120		**819903**
4850371		**700021**
5882696		**506189**
5890406		**506063**
5894255		**506075**
5894394		**506859**
5894580		**506075**
5896813		**506561**
5896817		**506561**
5896818		**506560**
5896819		**506560**
5896823		**506561**
5972332		**700019**
5973319		**506134**
5992746		**819774**
5999790		**506859**
5999818		**819963**
7303174		**819903**
7558930		**820314**
7564583		**819896**
7574887		**506167**
7574911		**819940**
7576327		**820232**
7580753		**506075**
7580756		**506075**
7581200		**819960**
7581201		**819960**
7581635		**820008**
7588856		**700007**
7589135		**819938**
7589337		**700007**
7596228		**820315**
7613245		**819964**
7614475		**819964**
7615234		**819882**
7615235		**819896**

OE	PROD	Valeo
LANCIA (.../...)		
7625346		**819963**
7625347		**819963**
7629033		**506560**
7633560		**506508**
7642522		**819827**
7655732		**820031**
7656567		**819882**
7661811		**506123**
7661813		**506859**
7663320		**700027**
7671810		**506508**
7692285		**506561**
7693569		**506561**
7693570		**506560**
7694229		**506859**
7695557		**506859**
7695559		**506123**
7695951		**820232**
7696226		**506560**
7701137		**506296**
7715242		**506397**
7719921		**506572**
7723325		**820150**
7727042		**820403**
7728057		**819774**
7729545		**820161**
7730098		**820066**
7735919		**700010**
7737200		**506299**
7738223		**700022**
7738582		**820031**
7744397		**506299**
7747386		**506123**
7747388		**506335**
7750698		**506379**
7756249		**820461**
7762924		**506597**
7762925		**506590**
7762926		**506516**
7770041		**506572**
7778653		**820433**
7783006		**506296**
7783009		**506859**
7784974		**506075**
7784977		**506299**

OE	PROD	Valeo
LANCIA (.../...)		
7784981		**506572**
7784988		**506299**
46410549		**506379**
46413969		**820030**
46414596		**700024**
46417962		**820452**
46422512		**506598**
46423351		**506397**
46431723		**820407**
46431724		**820155**
46432157		**820978**
46435858		**506559**
46437912		**506379**
46437916		**506379**
46444355		**506523**
46464991		**820446**
46472179		**700028**
46477022		**700021**
46477717		**820031**
46478033		**819827**
46515970		**506590**
46515971		**506597**
46520401		**506686**
46520785		**820449**
46522664		**820454**
46523118		**819938**
46526243		**506640**
46546375		**820411**
46776216		**820446**
46776217		**820454**
46795667		**820562**
46804051		**506808**
46804764		**820587**
46815125		**506716**
46819138		**506716**
46822435		**820561**
55180041		**820563**
55184080		**506640**
55184081		**506686**
55186478		**820577**
55189845		**820578**
55194271		**820934**
55202176		**820935**
55204538		**506967**
55209993		**506808**

OE	PROD	Valeo
LANCIA (.../...)		
55221397		**506967**
60513205		**700019**
60586222		**506518**
60620386		**820448**
60805482		**700007**
60806379		**700021**
60811328		**506518**
60812410		**820401**
60812439		**700027**
60814382		**820402**
60814609		**506590**
60814610		**820410**
60814715		**700028**
60815741		**820410**
60816681		**820562**
71713727		**506397**
71713728		**506598**
71719670		**506859**
71737960		**506063**
71737962		**506134**
71737963		**506167**
71737964		**506123**
71737965		**506975**
71737967		**506296**
71737971		**506299**
71737979		**506379**
71737988		**506559**
71745026		**506716**
82342688		**819939**
82355032		**819768**
82390243		**820153**
82436409		**819826**
82436410		**819774**
82465533		**819774**
82477919		**819773**
91107589		**506123**
98430541		**506295**
98435125		**506297**
99440930		**506297**
7910247116		**819872**
9406475080		**819747**
9463623088		**506719**
9563868480		**819747**
9566945688		**506117**
9566950080		**506530**

OE	PROD	Valeo
LANCIA (.../...)		
9569147388		**506575**
9569623880		**506291**
9601842680		**700000**
9604708880		**506291**
9606456180		**819752**
9613147080		**700015**
9616090180		**819950**
9616090280		**820471**
9618572580		**700017**
9621000680		**700056**
9629110980		**506291**
9629968880		**819752**
9630066680		**820431**
9630066780		**820434**
9632562080		**700055**
9635651080		**700405**
9640601280		**506918**
9655043180		**506918**
9663654980		**506918**
9670557580		**506918**
9684319880		**506978**
LAND ROVER		
602687		**820486**
1316149		**700410**
4575902		**506913**
ERR2803		**820074**
ERR3291		**820487**
ETC4761		**820485**
ETC4763		**820486**
ETC4765		**820488**
LR003829		**700421**
LR003830		**700420**
LR005764		**506988**
LR006960		**700422**
LR006986		**700420**
LR006987		**700421**
LR006988		**700422**
LR006994		**700411**
LR006995		**700410**
LR009702		**700420**
LR009735		**700421**
LR009809		**700422**
LR009810		**700423**
LR010124		**700410**

OE	PROD	Valeo
LAND ROVER (.../...)		
LR010125		**700411**
LR011694		**506978**
LR018321		**700421**
LR018322		**700420**
LR018323		**700422**
LR018324		**700423**
LR018465		**700410**
LR018466		**700411**
PEB000050		**506663**
PEB10051		**506114**
PEB102010		**506320**
PEB102420L		**506320**
PEB102510L		**506696**
PEB500090		**506732**
PEL000060		**820427**
PEL10016		**820056**
PEM100990		**820955**
PEM101020		**820955**
PRC3366		**819746**
PRC3541		**819761**
RTC3644		**506827**
RTC6331		**506830**
RTC6332		**506828**
RTC6339		**506830**
RTC6395		**506323**
RTC6673		**820059**
STC1086		**506732**
STC3338		**820064**
STC4378		**506829**
STC4434		**506829**
STC635		**506828**
STC637		**506827**
WAV500210		**700411**
LEXUS		
1610009340		**506905**
1610029085		**506618**
1610049837		**506542**
1611049155		**506946**
1611049156		**506946**
9091603084		**820512**
9091603100		**820513**
9091603129		**820136**

OE	PROD	Valeo
MARUTI		
1740078821		**506870**
1760082810		**819842**
1767082000		**820438**
MAZDA		
812415171		**819943**
817315171		**819943**
817399152		**819943**
855315171		**820476**
022315171D		**820191**
032415010D		**506413**
1E0415010		**506581**
1E0415010B		**506581**
1E0515010		**506472**
1E0615010		**506472**
1E0715010		**506529**
1E0715171		**820475**
1E0715171A		**820475**
5E0115171		**820072**
817399152A		**819943**
8AB115010		**506424**
8AB115171		**820191**
8AB315171		**819852**
8AB415010		**506399**
8AB415010A		**506399**
8AB415171		**819882**
8AB415171A		**819882**
8AB515010A		**506401**
8AB715010		**506399**
8AB715171		**819942**
8AB815010		**506401**
8AB815171		**820191**
8AB915171		**820044**
8ABB15010A		**506948**
8ABB15171		**819943**
8ABB15171A		**819943**
8ABC15171		**819942**
8ABE15171		**820544**
8ABT15010A		**506424**
8AD215010A		**506399**
8AG115010A		**506685**
8AG115010B		**506685**
8AG115171		**820072**
8AG215171		**820072**
8AG215171A		**820072**

OE	PROD	Valeo
MAZDA (.../...)		
8AG315171		**820191**
8AG415171		**819943**
8AG515171		**820191**
8AG615171		**820072**
8AG715171		**820191**
8AG815010		**506536**
8AG815171		**820072**
8AG915010		**506536**
8AH115171		**819943**
8AH115171B		**819943**
8AH215010B		**506400**
8AH315010B		**506626**
8AH315010C		**506626**
8AH315010E		**506626**
8AK115010		**506400**
8AK115010A		**506400**
8AK115171		**820191**
8AK215010		**506548**
8AL415010A		**506611**
8ALA15100A		**506898**
8AN115171		**820191**
8AZ415171		**820044**
8BU115010		**506689**
B30318840		**820235**
B3C715010		**506399**
B3C715010A		**506399**
B63015010D		**506399**
BP6F15171		**819943**
BP6F15171A		**819943**
C20115010		**506472**
C40115010		**506472**
C40215010		**506472**
E30115010B		**506424**
E30118840A		**820235**
E50818840A		**820236**
F62118840		**820235**
F8B818840A		**820235**
FP0115010F		**506536**
FP0115010G		**506536**
FS0115010F		**506536**
HE4115171		**819942**
HE4199152C		**819943**
L32715100		**506694**
L32715100A		**506694**
LF0115100		**506694**

OE	PROD	Valeo
MAZDA (.../...)		
LF5215100A		**506694**
LF9415100		**506694**
LF9415100A		**506694**
LF9415100A		**506694**
RF0199152		**819846**
RF0315010B		**506880**
RF7J15010A		**506694**
SAE115010		**506399**
V70715171		**820152**
Y40115010		**506714**
Y40115010A		**506714**
Y40415010		**506714**
Y60115010A		**506715**
Y60115010B		**506715**
Y6021517X		**820951**
Y60520300C		**700444**
Y70715171		**820152**
YF0915100		**506604**
YF0915171		**820547**
ZJ0115010A		**506973**
ZJ0115010B		**506973**
MERCEDES		
2000301		**506484**
2000701		**506484**
65451524		**820207**
65454524		**820222**
85425617		**700050**
1022000120		**506095**
1022000520		**506639**
1022000620		**506639**
1022000801		**506095**
1022000920		**506639**
1022001415		**819873**
1022001515		**819873**
1022003901		**506639**
1022004201		**506095**
1022004901		**506639**
1022005001		**506639**
1022006201		**506639**
1032000401		**506061**
1032001601		**506061**
1032001801		**506057**
1032001901		**506057**
1032002701		**506057**

OE	PROD	Valeo
MERCEDES (.../...)		
1032003801		**506057**
1042000301		**506380**
1042000801		**506628**
1042002701		**506547**
1042002801		**506535**
1042002901		**506380**
1042003101		**506628**
1042003201		**506547**
1042003301		**506305**
1042004401		**506305**
1042004501		**506535**
1042004701		**506305**
1042004801		**506547**
1102000515		**819873**
1102000920		**506100**
1102001120		**506097**
1102001720		**506100**
1102001920		**506097**
1112000315		**820147**
1112000401		**506306**
1112000415		**820184**
1112000815		**820184**
1112000915		**820184**
1112002101		**506650**
1112002201		**506592**
1112002301		**506660**
1112002401		**506651**
1112003801		**506650**
1112003901		**506651**
1112004001		**506306**
1112004101		**506592**
1112004201		**506882**
1122000015		**820495**
1122000201		**506787**
1122000401		**506787**
1122000501		**506832**
1122001101		**506787**
1122001201		**506832**
1122001401		**506787**
1122001501		**506832**
1122030275		**820495**
1152000020		**506100**
1152000615		**820768**
1152001520		**506100**
1152001820		**506100**

OE	PROD	Valeo
MERCEDES (.../...)		
1162000015		**819870**
1162000315		**820494**
1162001201		**506619**
1162001301		**506619**
1162001401		**506619**
1162001601		**506619**
1162001701		**506619**
1172001701		**506058**
1172002901		**506058**
1172003301		**506058**
1192000015		**820979**
1192000401		**506444**
1192000901		**506444**
1192001501		**506444**
1192002101		**506632**
1212000820		**506100**
1212000920		**506100**
1662000320		**506593**
1662000420		**506593**
1662000520		**506593**
1662000620		**506678**
1662000720		**506678**
1662030275		**820491**
2662030275		**820940**
2712000015		**820941**
2712000201		**506865**
2722000401		**526005**
2722000901		**506964**
6012000015		**819970**
6012000115		**819969**
6012000220		**506078**
6012000720		**506078**
6012000920		**506078**
6012001120		**506307**
6022000015		**819969**
6022000020		**506060**
6022000120		**506060**
6022000220		**506060**
6022000520		**506060**
6052000120		**506671**
6052000320		**506671**
6052000520		**506671**
6052000820		**506671**
6112000015		**820776**
6112000215		**820589**

OE	PROD	Valeo
MERCEDES (.../...)		
6112000401		**506833**
6112000501		**506875**
6112000515		**820800**
6112000615		**820598**
6112000715		**820589**
6112001001		**506833**
6112001101		**506875**
6112001201		**506676**
6122000015		**820835**
6132000701		**506675**
6132000901		**506930**
6162000420		**506343**
6162000720		**506343**
6402000301		**506899**
6422000701		**506980**
6422001001		**506987**
6462000015		**820571**
6462000301		**506831**
6462001001		**506926**
6682030075		**820492**
6682030275		**820492**
MG		
GTS301		**820056**
GWP333		**506114**
PEB10051		**506114**
PEB102010		**506320**
PEB102240		**506842**
PEB102420		**506320**
PEB102440		**506710**
PEB102470		**506710**
PEB102510		**506696**
PEB102510L		**506696**
PEL10016		**820056**
MINI		
11517510803		**506788**
11517513062		**506788**
11517550484		**506914**
11517790871		**506907**
11517805992		**506715**
11531485847		**820568**
11537791072		**820516**
11717804950		**700444**

OE	PROD	Valeo
MITSUBISHI		
1300A066		**506934**
1300A069		**506956**
1300A082		**526006**
1300A083		**526006**
M345611		**506019**
M855991		**506019**
MB356704		**820301**
MB845063		**820301**
MD005131		**820767**
MD015299		**820771**
MD164541		**820194**
MD170031		**820135**
MD174233		**820513**
MD175746		**820136**
MD194988		**820553**
MD309756		**506835**
MD310106		**820136**
MD315301		**820512**
MD317015		**820194**
MD323372		**506900**
MD328070		**820519**
MD332446		**820519**
MD335170		**820136**
MD337408		**820512**
MD338234		**820552**
MD345617		**820135**
MD346547		**820533**
MD346790		**506835**
MD365087		**506900**
MD370803		**506900**
MD971539		**506857**
MD971582		**506405**
MD972001		**506778**
MD972002		**506736**
MD972003		**506408**
MD972004		**506408**
MD972005		**506633**
MD972006		**506857**
MD972050		**506936**
MD972051		**506405**
MD972052		**506617**
MD972053		**506617**
MD972054		**506857**
MD972903		**819943**
MD972905		**819942**

OE	PROD	Valeo
MITSUBISHI (.../...)		
MD972908		**819942**
MD972909		**820496**
MD973162		**506539**
MD974649		**506406**
MD974899		**506815**
MD974999		**506736**
MD975291		**506736**
MD975292		**506689**
MD976464		**506815**
MD976943		**506815**
MD977311		**506815**
MD977503		**506958**
MD978552		**506956**
MD979171		**506958**
MD979395		**506934**
MD980000		**506408**
MD997076		**506406**
MD997078		**506404**
MD997079		**506405**
MD997080		**506405**
MD997081		**506407**
MD997084		**506778**
MD997150		**506778**
MD997158		**506689**
MD997178		**506689**
MD997203		**506689**
MD997222		**820942**
MD997224		**820771**
MD997225		**820496**
MD997417		**506617**
MD997421		**506404**
MD997430		**506617**
MD997602		**819942**
MD997603		**819942**
MD997604		**819943**
MD997605		**820942**
MD997606		**819884**
MD997607		**819942**
MD997608		**819943**
MD997609		**506406**
MD997611		**506404**
MD997612		**506405**
MD997613		**506405**
MD997614		**506407**
MD997615		**506405**

OE	PROD	Valeo
MITSUBISHI (.../...)		
MD997616		**506689**
MD997618		**506778**
MD997619		**506404**
MD997621		**506617**
MD997622		**506617**
MD997634		**506408**
MD997643		**506633**
ME190303		**820135**
ME191593		**820194**
ME200262		**820135**
ME993473		**506734**
ME993474		**506734**
ME996789		**506734**
ME996790		**506734**
MN143664		**506962**
MN960330		**506899**
MN980134		**506699**
MN980137		**820171**
MN982187		**506978**
MW30620725		**506698**
NISSAN		
999108		**506360**
210101600		**506487**
741001042		**506360**
741001052		**506358**
741001122		**506358**
741001134		**506360**
743000640		**819895**
2101021026		**506377**
2101021027		**506377**
2101021028		**506377**
2101021029		**506377**
2101021085		**506377**
2101061527		**506779**
2101061528		**506779**
2101061529		**506779**
2101061585		**506779**
2101061594		**506779**
2120076204		**819864**
2120078500		**819966**
2120096011		**819865**
2120896002		**819865**
2101006E25		**506037**
11060AW300		**820527**

OE	PROD	Valeo
NISSAN (.../...)		
11060BN700		**820537**
1106100QAB		**820556**
1106100QAD		**820527**
1106100QAE		**820138**
1106100QAG		**820537**
1471000Q0U		**700449**
1471000Q0T		**700449**
147351AT0A		**700453**
147355X00A		**700452**
2101000Q0C		**506902**
2101000Q0E		**506863**
2101000QAA		**506655**
2101000QAC		**506698**
2101000QAD		**506709**
2101000QAE		**506674**
2101000QAH		**506780**
2101000QAJ		**506573**
2101000QAK		**506780**
2101000QAL		**506780**
2101000QAS		**506674**
2101000QAT		**506674**
2101001M25		**506023**
2101002N88		**506437**
210100F001		**506733**
210100F002		**506733**
210100M300		**506438**
210100M301		**506438**
2101012G26		**506606**
2101019B25		**506622**
210101C505		**506357**
210101F700		**506368**
2101022J00		**506394**
2101022J25		**506394**
2101022J26		**506394**
2101024B25		**506622**
210102W225		**506868**
210102W226		**506868**
210102W227		**506868**
2101030R05		**506682**
2101040F25		**506836**
2101040F27		**506836**
2101041B02		**506368**
2101043G27		**506782**
2101043G28		**506782**
2101050A26		**506023**

OE	PROD	Valeo
NISSAN (.../...)		
2101050A27		**506023**
2101050A28		**506023**
2101053J00		**506437**
2101053J01		**506437**
2101053J03		**506437**
2101053J04		**506437**
2101053Y00		**506438**
2101053Y01		**506438**
2101057J01		**506737**
2101057J02		**506737**
2101057J03		**506737**
2101057J25		**506737**
2101057J26		**506737**
2101057J27		**506737**
21010615Y5		**506779**
2101069T02		**506731**
210106F900		**506290**
210106F906		**506290**
210106F907		**506290**
210106N225		**506916**
210106N226		**506916**
2101070J00		**506437**
2101071J00		**506438**
2101077A00		**506436**
210107F400		**506733**
210107Y025		**506924**
210107Y026		**506924**
2101080G01		**506733**
2101080G25		**506733**
2101081T25		**506394**
2101086G00		**506836**
2101088R00		**506438**
2101099B00		**506368**
210109C600		**506534**
210109F501		**506437**
210109F600		**506705**
210109F605		**506705**
21010AD200		**506702**
21010AD201		**506702**
21010AD225		**506702**
21010AD226		**506702**
21010AL525		**506924**
21010AL526		**506924**
21010AL527		**506924**
21010AL528		**506924**

OE	PROD	Valeo
NISSAN (.../...)		
21010AW300		**506725**
21010BN700		**506674**
21010BX000		**506717**
21010C6026		**506779**
21010C6525		**506779**
21010EB300		**506927**
21010G5500		**506357**
21010G5510		**506357**
21010G5526		**506357**
21010G5586		**506357**
21010H5025		**506091**
21010H7227		**506416**
21010M6626		**506091**
21010V5525		**506429**
21010V5529		**506429**
21010VK525		**506927**
2120000QAA		**820025**
2120001B00		**820042**
2120005D00		**820177**
2120005D01		**819864**
2120005D02		**819864**
2120005D10		**820178**
2120005D12		**820178**
212000C810		**820181**
212000C811		**820181**
2120016A00		**820176**
2120016A05		**820176**
2120016A10		**820181**
212002W201		**820512**
212002W202		**820512**
2120031U13		**820596**
2120040F00		**819846**
2120042L00		**819864**
2120042L01		**819864**
2120047R00		**820181**
212004M500		**819945**
2120053J00		**820181**
2120053J10		**820181**
2120057J00		**820512**
2120057J05		**820533**
2120057J10		**820194**
2120057J15		**820512**
2120058G02		**820942**
2120058G04		**820942**
2120060J00		**820176**

OE	PROD	Valeo
NISSAN (.../...)		
2120060J10		**820176**
2120060J11		**820176**
2120069T06		**819945**
212006F900		**819897**
212006F901		**819897**
212006N210		**820176**
2120077A00		**820178**
2120077A05		**820510**
2120077A60		**820524**
2120077A65		**819911**
2120077A66		**819945**
2120080W05		**819967**
2120086J00		**819945**
2120086J01		**819945**
2120089J00		**820176**
2120090J10		**819945**
2120093J00		**820181**
2120093J01		**820181**
2120093J10		**820176**
212009F500		**820176**
212009F600		**819945**
21200A3005		**819967**
21200AD201		**820553**
21200BN300		**820513**
21200BN301		**820513**
21200BX000		**819846**
21200G2400		**819864**
21200G2401		**820178**
21200H7800		**819966**
21200P7500		**819967**
21200P7901		**819966**
21200P7905		**819967**
21200P7906		**819967**
21200Q9000		**819967**
21200V0105		**819967**
21200V0200		**819966**
21200V0201		**819966**
21200V0205		**819967**
21200V0206		**819846**
21200V0700		**819864**
21200W3300		**819864**
21200W3305		**819864**
21200Y9701		**820178**
2159501A00		**820240**
2159501B00		**820239**

OE	PROD	Valeo
NISSAN (.../...)		
2159503B60		**820239**
2159504F04		**820233**
2159563A00		**820233**
2159563A01		**820233**
215956F600		**820037**
21595Q9025		**820832**
250809F900		**700042**
B1010EN20B		**506965**
B1010ET00A		**506965**
B1010VK525		**506927**
OPEL		
850413		**700018**
1236302		**700020**
1334004		**506006**
1334008		**506005**
1334009		**506084**
1334010		**506007**
1334011		**506030**
1334013		**506003**
1334014		**506087**
1334016		**506085**
1334017		**506080**
1334021		**506084**
1334023		**506006**
1334024		**506030**
1334025		**506007**
1334027		**506031**
1334031		**506153**
1334035		**506048**
1334038		**506080**
1334041		**506309**
1334045		**506346**
1334046		**506308**
1334050		**506309**
1334052		**506153**
1334053		**506309**
1334054		**506310**
1334059		**506527**
1334065		**506007**
1334066		**506308**
1334067		**506839**
1334069		**506481**
1334070		**506006**
1334071		**506031**

OE	PROD	Valeo
OPEL (.../...)		
1334072		**506048**
1334073		**506697**
1334077		**506703**
1334078		**506785**
1334079		**506601**
1334081		**506048**
1334083		**506839**
1334084		**506003**
1334087		**506346**
1334097		**506089**
1334098		**506007**
1334104		**506929**
1334105		**506153**
1334107		**506482**
1334112		**506289**
1334113		**506929**
1334114		**506483**
1334115		**506481**
1334117		**506657**
1334121		**506483**
1334123		**506692**
1334124		**506289**
1334130		**506601**
1334131		**506527**
1334135		**506656**
1334139		**506856**
1334140		**506527**
1334142		**506837**
1334143		**506697**
1334144		**506728**
1334145		**506838**
1334147		**506590**
1334647		**506716**
1334648		**506866**
1334711		**506983**
1338001		**820502**
1338003		**820593**
1338004		**820972**
1338009		**820592**
1338014		**820149**
1338015		**820594**
1338017		**820590**
1338018		**819851**
1338024		**819867**
1338033		**820148**

OE	PROD	Valeo
OPEL (.../...)		
1338038		**819869**
1338043		**820071**
1338046		**819848**
1338049		**820071**
1338050		**819968**
1338051		**819869**
1338052		**819935**
1338055		**819846**
1338056		**820072**
1338057		**820050**
1338060		**820185**
1338061		**819867**
1338062		**820070**
1338063		**819968**
1338067		**820149**
1338068		**820140**
1338069		**820500**
1338070		**820050**
1338073		**820139**
1338074		**820506**
1338075		**820152**
1338076		**820064**
1338077		**819966**
1338078		**820149**
1338079		**820141**
1338080		**820258**
1338082		**820064**
1338084		**820149**
1338087		**820507**
1338091		**820064**
1338093		**820975**
1338094		**820501**
1338096		**820151**
1338097		**820592**
1338098		**820502**
1338100		**820503**
1338154		**820965**
1338275		**820965**
1338331		**820504**
1338441		**700018**
1338444		**700019**
1338450		**700020**
1338451		**700019**
1338454		**700022**
1338457		**700023**

OE	PROD	Valeo
OPEL (.../...)		
1338458		**700019**
1338466		**820059**
1338467		**700028**
1338477		**700018**
1338478		**820140**
1338507		**700043**
1338511		**700028**
1341002		**819746**
1341003		**819760**
1341011		**819830**
1341012		**820206**
1341017		**819830**
1341018		**819829**
1341020		**820324**
1341021		**820212**
1341022		**820307**
1341023		**820038**
1341024		**820219**
1341025		**820036**
1341026		**820037**
1341027		**820036**
1341028		**820242**
1341030		**820828**
1341033		**820308**
1341036		**820309**
1341037		**820312**
1341039		**820037**
1341041		**820310**
1341042		**820241**
1341044		**820037**
1341047		**819830**
1341856		**700018**
1342561		**700005**
1342567		**700005**
1342569		**700005**
1342850		**700021**
1342852		**700022**
1348049		**820071**
1846201		**820227**
1846325		**820311**
4294280		**820506**
4304369		**819966**
4400106		**820023**
4401595		**506709**
4401810		**700016**

OE	PROD	Valeo
OPEL (.../...)		
4402309		**819745**
4402719		**820008**
4404088		**506106**
4404098		**506019**
4404305		**820527**
4404308		**506106**
4408028		**506698**
4408334		**820025**
4408928		**820527**
4409162		**506019**
4431125		**506902**
4500001		**700021**
4500754		**820032**
4500823		**820432**
4501293		**506783**
4501294		**506784**
4506045		**506709**
6235605		**700028**
6238179		**700028**
6238236		**700020**
6238266		**700028**
6238422		**700028**
6238935		**700028**
6334001		**506716**
6334002		**506839**
6334003		**506590**
6334004		**506482**
6334005		**506483**
6334008		**506481**
6334011		**506085**
6334012		**506084**
6334013		**506031**
6334019		**506697**
6334022		**506601**
6334024		**506697**
6334025		**506601**
6334035		**506703**
6334038		**506481**
6334039		**506785**
6334040		**506657**
6334042		**506839**
6334043		**506866**
6334048		**506697**
6338004		**820591**
6338005		**820502**

OE	PROD	Valeo
OPEL (.../...)		
6338014		**820553**
6338017		**820502**
6338022		**820563**
6338028		**820151**
6338029		**820553**
6338486		**700028**
6434042		**506839**
PEUGEOT		
1201E0		**506291**
1201E7		**506918**
24212		**819758**
24246		**700019**
24261		**700039**
120129		**506108**
120130		**506108**
120134		**506292**
120135		**506170**
120136		**506178**
120137		**506178**
120139		**506011**
120140		**506292**
120142		**506088**
120145		**506032**
120147		**506035**
120148		**506014**
120150		**506029**
120151		**506014**
120152		**506117**
120155		**506291**
120158		**506290**
120160		**506014**
120161		**506029**
120163		**506011**
120164		**506293**
120166		**506035**
120167		**506117**
120170		**506582**
120171		**506170**
120174		**506170**
120176		**506088**
120179		**506245**
120183		**506230**
120184		**506274**
120185		**506259**

OE	PROD	Valeo
PEUGEOT (.../...)		
120186		**506035**
120189		**506122**
120191		**506117**
120193		**506530**
120195		**506669**
120196		**506670**
120197		**506290**
120198		**506531**
120267		**506108**
120268		**506108**
120270		**506245**
120271		**506245**
120286		**506247**
120287		**506230**
120292		**506274**
120293		**506259**
120294		**506035**
120297		**506122**
120434		**506035**
120718		**506035**
120723		**506035**
120725		**506290**
126404		**819749**
126410		**819828**
126411		**819764**
126414		**819757**
126415		**819744**
126416		**819772**
126417		**819770**
126418		**819773**
126420		**819760**
126421		**819761**
126422		**819771**
126423		**819751**
126424		**819755**
126425		**819747**
126426		**819752**
126427		**819754**
126430		**820030**
126431		**819753**
126432		**819773**
126433		**820031**
126434		**819827**
126435		**819774**
126436		**819755**

OE	PROD	Valeo
PEUGEOT (.../...)		
126437		**819752**
126438		**819747**
126440		**819752**
126443		**819753**
126444		**819755**
126445		**819747**
133720		**819859**
133725		**819855**
133726		**819856**
133734		**819839**
133735		**819866**
133739		**820471**
133740		**819876**
133747		**819900**
133748		**819895**
133749		**819899**
133753		**819863**
133754		**820021**
133759		**819878**
133764		**819952**
133765		**819838**
133766		**819877**
133768		**819905**
133772		**700001**
133797		**819889**
133802		**700001**
133803		**819896**
133804		**819936**
133808		**819936**
133809		**700000**
133812		**819929**
133814		**819930**
133816		**820043**
133818		**819930**
133820		**819937**
133821		**819897**
133823		**819950**
133824		**819951**
133825		**819952**
133826		**819934**
133827		**820834**
133834		**700008**
133837		**819946**
133838		**819953**
133839		**820471**

OE	PROD	Valeo
PEUGEOT (.../...)		
133846		**819956**
133855		**700056**
133873		**820131**
133878		**700017**
133883		**819946**
133890		**820432**
133897		**700054**
161859		**700414**
1201E3		**506035**
1201E4		**506290**
1201E5		**506595**
1201E6		**506290**
9676936180		**700441**
9678163380		**700441**
9678257280		**700451**
9806731880		**700443**
1201E7		**506918**
1201E8		**506719**
0345G7		**700440**
0345G9		**700443**
1201A1		**506530**
1201A2		**506595**
1201A3		**506582**
1201A4		**506117**
1201A5		**506596**
1201A6		**506643**
1201A7		**506291**
1201A8		**506574**
1201C4		**506575**
1201C5		**506291**
1201C6		**506291**
1201C7		**506643**
1201C9		**506514**
1201F4		**506918**
1201F5		**506918**
1201F8		**506514**
1201F9		**506714**
1201G0		**506704**
1201G1		**506715**
1201G2		**506721**
1201G5		**506918**
1201G6		**506952**
1201G8		**506714**
1201G9		**506715**
1201H0		**506852**

OE	PROD	Valeo
PEUGEOT (.../...)		
1201H5		**506514**
1201H7		**506978**
1201H8		**506914**
1201J0		**506852**
1201J2		**506918**
1201J4		**506961**
1201J6		**506978**
1201J9		**526006**
1201K0		**506961**
1201K1		**506918**
1201K4		**526006**
1201L2		**506918**
1201L3		**506852**
1201L9		**506983**
1336F9		**819954**
1336J1		**820433**
1336N5		**820434**
1336Q1		**820434**
1336Q2		**820430**
1336X1		**820976**
1336X2		**820951**
1336Z2		**820977**
1338A0		**820431**
1338A5		**700021**
1338A6		**700054**
1338C1		**700055**
1338C7		**700028**
1338C8		**819897**
1338F9		**700028**
1618N6		**700411**
1618N7		**700410**
1618N8		**700413**
1618NQ		**700434**
1618NR		**700414**
1618PF		**700413**
1618PS		**700441**
1618Q0		**700405**
1618QF		**700411**
16287T		**700401**
1628CF		**700404**
1628JZ		**700405**
1628WR		**700408**
1628WV		**700406**
1628XV		**700407**
1920C4		**700014**

OE	PROD	Valeo
PEUGEOT (.../...)		
1920K9		**700015**
PIAGGIO		
1634187795000		**820042**
PORSCHE		
60121011		**506186**
94410612905		**819867**
94460648100		**819759**
059121113B		**819852**
823959481F		**819759**
PROTON		
MD175746		**820136**
MD315301		**820512**
MD317015		**820194**
MD337408		**820512**
MD972054		**506857**
MD972903		**819943**
MD974649		**506406**
MD997604		**819943**
MD997609		**506406**
RENAULT		
5000815791		**820027**
5000816924		**820023**
6001023839		**819756**
6001545345		**506019**
6006001590		**819782**
6025106008		**820830**
7436842409		**820040**
7438610006		**506325**
7438610035		**506325**
7439180811		**820040**
7439186486		**700037**
7700105176		**506655**
7700105378		**506655**
7700106101		**506637**
7700107845		**506637**
7700109641		**820179**
7700110716		**820138**
7700111841		**506637**
7700112491		**820179**
7700274330		**506655**
7700300648		**820032**

OE	PROD	Valeo
RENAULT (.../...)		
7700421969		**820032**
7700578467		**819879**
7700665226		**819937**
7700697157		**819898**
7700703136		**819840**
7700723945		**819862**
7700735456		**819916**
7700736091		**506099**
7700737571		**700016**
7700742617		**820009**
7700748169		**819749**
7700759441		**819744**
7700771821		**700033**
7700777683		**819781**
7700777685		**819782**
7700782503		**819745**
7700782694		**819781**
7700786467		**700060**
7700796048		**819783**
7700798264		**820033**
7700809773		**820215**
7700809909		**700009**
7700829427		**700057**
7700839072		**820032**
7700858802		**820009**
7700859931		**506579**
7700861627		**506637**
7700861686		**506655**
7700862200		**820010**
7700864596		**506580**
7700866518		**506564**
7700866896		**820008**
7700868274		**820047**
7700868980		**820048**
7700869343		**700016**
7700871801		**506579**
7700872314		**820008**
7700872554		**820025**
7701038494		**819955**
7701040964		**820032**
7701057805		**820513**
7701348068		**819924**
7701348139		**819879**
7701348194		**819744**
7701348372		**820008**

OE	PROD	Valeo
RENAULT (.../...)		
7701348373		**819862**
7701348374		**819923**
7701348375		**819921**
7701348376		**819922**
7701349415		**819891**
7701457415		**506041**
7701457671		**506059**
7701459435		**506041**
7701460696		**506328**
7701461006		**506073**
7701461173		**506341**
7701461174		**506337**
7701461336		**506074**
7701461405		**506076**
7701462389		**506043**
7701462808		**506106**
7701463014		**506473**
7701463182		**506076**
7701463377		**506347**
7701463637		**506330**
7701464030		**506072**
7701464538		**506086**
7701464736		**506019**
7701465513		**506311**
7701465643		**506345**
7701465816		**506019**
7701466262		**506869**
7701466419		**506347**
7701466420		**506367**
7701466571		**506317**
7701466578		**506019**
7701466778		**506315**
7701466779		**506316**
7701466788		**506314**
7701466850		**506526**
7701467153		**506486**
7701467223		**506072**
7701467278		**506297**
7701467546		**506341**
7701467642		**506599**
7701467915		**506473**
7701468082		**506526**
7701468342		**506106**
7701468491		**506019**
7701470879		**506783**

OE	PROD	Valeo
RENAULT (.../...)		
7701470880		**506784**
7701472182		**506698**
7701472625		**506709**
7701473327		**506674**
7701473365		**506019**
7701473784		**506106**
7701474006		**506728**
7701474190		**506709**
7701474248		**820179**
7701474249		**820179**
7701474435		**506725**
7701474510		**820596**
7701475995		**506863**
7701476496		**506674**
7701478018		**506573**
7701478031		**506863**
7701478830		**506993**
7701478846		**526010**
7701478923		**506780**
7701478924		**506580**
7701479043		**506698**
7701479114		**526001**
7701633125		**506099**
8200037686		**506580**
8200039885		**820537**
8200042514		**506637**
8200042880		**506780**
8200074346		**820527**
8200074349		**820556**
8200088660		**506580**
8200088663		**506580**
8200112054		**820536**
8200146297		**506655**
8200146298		**506573**
8200146301		**506564**
8200238333		**506780**
8200244402		**820537**
8200248531		**820537**
8200266947		**506729**
8200266950		**506780**
8200302798		**700416**
8200332040		**506902**
8200374994		**820537**
8200397732		**506968**
8200428447		**506655**

OE	PROD	Valeo
RENAULT (.../...)		
8200479402		**820025**
8200525397		**820786**
8200582675		**506655**
8200614985		**700429**
8200660882		**820138**
8200702750		**506968**
8200702755		**506968**
8200754913		**700430**
8200762517		**700433**
8200772985		**820025**
8200987453		**700431**
8201027384		**700433**
9617028380		**820131**
9627391380		**506869**
9629937980		**506526**
9640344280		**506643**
147101478R		**700449**
147106293R		**700433**
210102773R		**506965**
210105296R		**506655**
210106N226		**506916**
210108845R		**506780**
B1010EN20B		**506965**
RENAULT VEHICULES INDUSTRIELS		
5001853804		**506879**
ROVER		
GTS101		**819864**
GTS102		**819850**
GTS106		**820049**
GTS108		**819864**
GTS1106		**820049**
GTS275		**820054**
GTS280		**819864**
GTS282		**820057**
GTS283		**820076**
GTS285		**820053**
GTS287		**820059**
GTS298		**820058**
GTS299		**819897**
GTS300		**820076**
GTS301		**820056**
GTS302		**820077**
GTS303		**819952**

OE	PROD	Valeo
ROVER (.../...)		
GTS319		**820165**
GVS106		**820832**
GWP1143		**506028**
GWP132		**506010**
GWP134		**506010**
GWP151		**506016**
GWP154		**506010**
GWP157		**506004**
GWP183		**506004**
GWP185		**506025**
GWP188		**506016**
GWP193		**506320**
GWP195		**506035**
GWP2157		**506045**
GWP2161		**506045**
GWP2162		**506673**
GWP2163		**506045**
GWP2602		**506842**
GWP2604		**506710**
GWP2709		**506320**
GWP330		**506540**
GWP333		**506114**
GWP336		**506018**
GWP337		**506014**
GWP338		**506014**
GWP341		**506035**
GWP342		**506321**
GWP343		**506322**
GWP345		**506321**
GWP346		**506290**
GWP347		**506320**
KTP9017		**820832**
PEB10051		**506114**
PEB102010		**506320**
PEB102240		**506842**
PEB102420		**506320**
PEB102440		**506710**
PEB102510		**506696**
PEB102510L		**506696**
PEL10016		**820056**
PEM101020		**820955**
SAAB		
3439088		**700005**
4086682		**820208**

OE	PROD	Valeo
SAAB (.../...)		
4086708		**819759**
4503017		**820149**
4623815		**820149**
4770970		**506527**
4772216		**700005**
4772711		**506657**
5342258		**820594**
5952148		**820513**
5955190		**506527**
5958061		**506527**
5960414		**506526**
7507460		**506040**
8389512		**819883**
8569238		**819759**
8817298		**820074**
8817538		**820073**
8817900		**506040**
8817918		**506133**
8821944		**506527**
8822025		**820074**
8822710		**506526**
8822793		**506526**
9148289		**506528**
9194242		**820074**
9321670		**506133**
9321688		**506528**
9321951		**506526**
9526518		**819759**
9543406		**700028**
9543802		**700005**
12566029		**506866**
12588982		**506866**
15393755		**700028**
24420728		**820594**
24467301		**506839**
55202510		**820965**
90540478		**506657**
90542063		**700028**
90543935		**506656**
90570185		**700028**
92149009		**506866**
93166829		**506526**
93178713		**506590**
93179114		**506590**
93181118		**506839**

OE	PROD	Valeo
SAAB (.../...)		
93182043		**506657**
SANTANA		
1740060812		**506614**
1740078101		**506923**
SEAT		
4331825		**506098**
5882689		**506098**
21121004		**506484**
22121011		**506798**
22121113		**820958**
25906041		**700019**
26906161		**700038**
28121004		**506513**
30121113		**820132**
36121005		**506578**
37121010		**506667**
37121113		**820245**
44121113		**820168**
71121005		**506587**
357919501		**700013**
867959481		**820034**
021121004A		**506484**
021121004V		**506484**
021121004X		**506484**
022121011X		**506798**
025906041A		**700011**
026121005H		**506667**
028121004V		**506513**
028121004X		**506513**
030121005L		**506282**
030121005LX		**506282**
030121005N		**506385**
030121005NX		**506385**
030121005S		**506577**
030121005T		**506385**
030121008A		**506577**
030121008C		**506577**
030121008CX		**506577**
030121008D		**506385**
030121008K		**506385**
032121110B		**820962**
032121110F		**820057**
036121005D		**506578**

OE	PROD	Valeo
SEAT (.../...)		
036121005E		**506576**
036121005J		**506578**
036121005M		**506578**
036121005P		**506706**
036121005Q		**506576**
036121005S		**506576**
036121005SX		**506576**
036121008L		**506576**
036121008LX		**506576**
036121008M		**506576**
037121005C		**506667**
037121010A		**506667**
037121010B		**506667**
037121010C		**506667**
038121011A		**506533**
038121011AV		**506533**
038121011AX		**506533**
038121011C		**506871**
038121011CX		**506871**
038121011D		**506699**
038121011G		**506872**
038121011GX		**506872**
038121011H		**506699**
038121011J		**506872**
038121011JX		**506872**
038121011K		**506699**
038121011KX		**506699**
03C121005D		**506867**
03C121005K		**506867**
03C121005L		**506867**
03C121005LX		**506867**
03C121005N		**506950**
03C121005NX		**506950**
03C121005R		**506950**
03C121005S		**506867**
03C121005SX		**506867**
03C121008B		**506950**
03C121008BX		**506950**
03C121008E		**506950**
03D121005		**506855**
03D121005X		**506855**
03D121013B		**506855**
03G121011		**506699**
03G121113		**820058**
03G121113A		**820168**

OE	PROD	Valeo
SEAT (.../...)		
03G131501		**700424**
03G131501P		**700424**
03L121011		**506974**
03L121011B		**506872**
03L121011BX		**506872**
03L121011X		**506974**
03L131501G		**700424**
03L131501K		**700424**
045121011B		**506873**
045121011BX		**506873**
045121011C		**506874**
045121011F		**506700**
045121011G		**506701**
045121011H		**506700**
045121011HX		**506700**
045121011J		**506701**
045121011JX		**506701**
047121013J		**506786**
050121113C		**820171**
056121113D		**819868**
066121011C		**506587**
066121011DX		**506587**
06A121011E		**506532**
06A121011HX		**506532**
06A121011L		**506532**
06A121011LV		**506532**
06A121011LX		**506532**
06A121011T		**506532**
06A121011TX		**506532**
06A121012		**506532**
06A121012G		**506532**
06A121012X		**506532**
06B121011B		**506790**
06B121011BX		**506790**
06B121011C		**506790**
06B121011CV		**506790**
06B121011E		**506790**
06B121011EV		**506790**
06B121011H		**506790**
06B121011HX		**506790**
06B121011L		**506790**
06B121011LX		**506790**
06B121011M		**506790**
06B121011MX		**506790**
06B121011Q		**506790**

OE	PROD	Valeo
SEAT (.../...)		
06F121011		**506876**
06F121011X		**506876**
06F121111		**820576**
071121005X		**506587**
075121113D		**820065**
191919369A		**820833**
191959481B		**819743**
191959481C		**819769**
1H0959481B		**820035**
1J0959481		**820302**
1J0959481A		**820831**
251919501D		**700036**
357919369F		**700063**
357919501A		**700012**
6U0919501B		**700012**
6X0959481		**820302**
SE020032000A		**506079**
SE020032221A		**819959**
SE021032000A		**506256**
SE021032221B		**819868**
SE021952600A		**820202**
SE021952600B		**819748**
SE127952600A		**819759**
SE700032000A		**506860**
SKODA		
4433017		**819760**
7070243		**506522**
7070246		**506522**
7070251		**506672**
28121004		**506513**
38121011		**506533**
44121113		**820168**
47121011		**506522**
78121006		**506517**
113095090		**820541**
114095090		**819927**
115050001		**506634**
115095070		**819757**
357919501		**700013**
867959481		**820034**
007072212A		**820595**
022121011A		**506798**
028121004V		**506513**
028121004X		**506513**

OE	PROD	Valeo
SKODA (.../...)		
030121005N		**506385**
030121005NV		**506385**
030121005NX		**506385**
030121005T		**506385**
030121008D		**506385**
030121008K		**506385**
032121110B		**820962**
032121110F		**820057**
036121005E		**506576**
036121005Q		**506576**
036121005S		**506576**
036121005SX		**506576**
036121008K		**506576**
036121008L		**506576**
036121008LX		**506576**
036121008M		**506576**
038121011A		**506533**
038121011AV		**506533**
038121011AX		**506533**
038121011C		**506871**
038121011CX		**506871**
038121011G		**506872**
038121011GX		**506872**
038121011H		**506699**
038121011J		**506872**
038121011JX		**506872**
038121011K		**506699**
038121011KX		**506699**
03C121005D		**506867**
03C121005K		**506867**
03C121005KX		**506867**
03C121005L		**506867**
03C121005LX		**506867**
03C121005N		**506950**
03C121005NX		**506950**
03C121005R		**506950**
03C121005S		**506867**
03C121005SX		**506867**
03C121008B		**506950**
03C121008BX		**506950**
03C121008E		**506950**
03D121005		**506855**
03D121005X		**506855**
03G121011		**506699**
03G121113		**820058**

OE	PROD	Valeo
SKODA (.../...)		
03G121113A		**820168**
03G131501		**700424**
03G131501P		**700424**
03L121011		**506974**
03L121011B		**506872**
03L121011BX		**506872**
03L121011X		**506974**
03L131501G		**700424**
03L131501K		**700424**
045121011B		**506873**
045121011BX		**506873**
045121011C		**506874**
045121011F		**506700**
045121011G		**506701**
045121011H		**506700**
045121011HX		**506700**
045121011J		**506701**
045121011JX		**506701**
047121011A		**506634**
047121011B		**506672**
047121013L		**506730**
047121013M		**506730**
047121013P		**506730**
047121013R		**506730**
047121111A		**820595**
047121111P		**820795**
050121113C		**820171**
059121004E		**506591**
059121004EX		**506591**
06A121011E		**506532**
06A121011F		**506532**
06A121011H		**506532**
06A121011HX		**506532**
06A121011L		**506532**
06A121011LX		**506532**
06A121011T		**506532**
06A121011TV		**506532**
06A121011TX		**506532**
06A121012		**506532**
06A121012G		**506532**
06A121012X		**506532**
06A121111A		**820959**
06B121011B		**506790**
06B121011BV		**506790**
06B121011BX		**506790**

OE	PROD	Valeo
SKODA (.../...)		
06B121011C		**506790**
06B121011E		**506790**
06B121011H		**506790**
06B121011HX		**506790**
06B121011L		**506790**
06B121011LX		**506790**
06B121011M		**506790**
06B121011MX		**506790**
06B121011Q		**506790**
06F121011		**506876**
06F121111		**820576**
078121004Q		**506517**
078121006X		**506517**
078121113F		**820027**
078121113G		**820414**
1H0959481B		**820035**
1J0959481		**820302**
1J0959481A		**820831**
6U0919501		**700019**
6U0959481		**819769**
6U0959481A		**819769**
6U0959481E		**819760**
8D0959481B		**820305**
SMART		
1352000001		**506962**
0003179C010000000		**820970**
0003179V010000000		**820781**
0004681V002000000		**506677**
0004698V0003000000		**820970**
SSANGYONG		
22037675		**819873**
6062030275		**819970**
SUBARU		
417535500		**820438**
417535700		**819842**
1740082851		**506568**
1760085821		**820042**
1768050F10		**820329**
21111AA002		**506440**
21111AA003		**506440**
21111AA004		**506440**
21111AA005		**506440**

OE	PROD	Valeo
SUBARU (.../...)		
21111AA006		**506440**
21111AA007		**506440**
21111AA022		**506439**
21111AA023		**506439**
21111AA026		**506439**
21111AA240		**506439**
21200AA010		**819966**
21200KA010		**820438**
21200KA050		**820438**
21200KA150		**820438**
21200KA151		**820509**
21200KA152		**820509**
SUZUKI		
1740078		**506880**
1741085		**506716**
1760078		**820072**
1740050812		**506659**
1740060812		**506614**
1740060813		**506614**
1740060815		**506614**
1740061820		**506908**
1740073810		**506923**
1740077810		**506904**
1740078820		**506870**
1740078821		**506870**
1740082811		**506565**
1740082812		**506565**
1740082823		**506568**
1740082850		**506568**
1740082851		**506568**
1740083011		**506565**
1740083810		**506565**
1740083811		**506565**
1740083812		**506565**
1740083814		**506565**
1740083815		**506565**
1740085830		**506903**
1757074001		**819942**
1760060813		**819942**
1760060823		**820767**
1760082810		**819842**
1760082830		**820438**
1760082860		**820438**
1760085811		**820438**

OE	PROD	Valeo
SUZUKI (.../...)		
1760085821		**820042**
1760085831		**819942**
1767079001		**820438**
1767082000		**820438**
1767082010		**820438**
1767085811		**820438**
1768078000		**820238**
1769084E50		**820563**
1740069G00		**506975**
1740069G01		**506975**
1740069G02		**506975**
1740079J50		**506590**
1740086CB1		**506117**
17400N86J00		**506716**
1741066G00		**506574**
1741067G00		**506880**
1741067JG0		**506725**
1757086CA0		**819950**
1767050G00		**820438**
1767050G10		**820042**
1767066G00		**819950**
1767076G00		**820438**
17670M85030		**820438**
1768050F10		**820329**
1811167JG4		**700447**
1852069K02		**700414**
TALBOT		
120140		**506292**
120145		**506032**
120163		**506011**
126414		**819757**
126416		**819772**
133753		**819863**
133797		**819889**
133837		**819946**
13255100		**819760**
TOYOTA		
1610009050		**506652**
1610009051		**506652**
1610009060		**506653**
1610009061		**506653**
1610009130		**506844**
1610009140		**506708**

OE	PROD	Valeo
TOYOTA (.../...)		
1610009141		**506708**
1610009240		**506852**
1610009310		**506844**
1610009340		**506905**
1610009450		**506852**
1610019015		**506410**
1610019016		**506410**
1610019017		**506410**
1610019035		**506423**
1610019036		**506423**
1610019095		**506939**
1610019105		**506426**
1610019106		**506426**
1610019115		**506939**
1610019125		**506610**
1610019126		**506610**
1610019195		**506610**
1610019205		**506652**
1610019225		**506610**
1610019226		**506610**
1610019235		**506847**
1610019255		**506942**
1610019295		**506652**
1610028010		**506412**
1610028020		**506412**
1610028041		**506843**
1610029085		**506618**
1610029095		**506844**
1610029115		**506707**
1610029116		**506707**
1610029125		**506708**
1610029135		**506851**
1610029145		**506906**
1610029146		**506906**
1610029155		**506848**
1610029156		**506848**
1610029175		**506844**
1610029185		**506849**
1610029195		**506848**
1610029415		**506844**
1610029495		**506905**
1610039315		**506411**
1610039316		**506411**
1610039317		**506411**
1610039345		**506468**

OE	PROD	Valeo
TOYOTA (.../...)		
1610039346		**506468**
1610039395		**506907**
1610039465		**506982**
1610039466		**506982**
1610049776		**506625**
1610049805		**506625**
1610049837		**506542**
1610049845		**506542**
1610049846		**506542**
1610059155		**506846**
1610059255		**506846**
1610059256		**506846**
1610059257		**506846**
1610069036		**506881**
1610069037		**506881**
1610069075		**506938**
1610069225		**506470**
1610069298		**506543**
1610069305		**506543**
1610069325		**506691**
1610069335		**506543**
1610069355		**506691**
1610069356		**506691**
1610069395		**506608**
1610069397		**506608**
1610069398		**506608**
1610079105		**506433**
1610079135		**506624**
1610079155		**506928**
1610079165		**506627**
1610079175		**506433**
1610079185		**506624**
1610079455		**506928**
1610080003		**506852**
1610080007		**506852**
1611019146		**506942**
1611019165		**506939**
1611019205		**506942**
1611069036		**506938**
1611079026		**506624**
1611079135		**506433**
1634054010		**820174**
8942810050		**820332**
8942810100		**820331**
8942812160		**820338**

OE	PROD	Valeo
TOYOTA (.../...)		
8942815011		**820237**
8942815030		**820325**
8942820060		**820326**
8942832010		**820237**
9091603020		**820172**
9091603026		**820442**
9091603033		**819942**
9091603034		**819875**
9091603037		**819942**
9091603038		**820172**
9091603039		**820442**
9091603040		**819943**
9091603042		**820773**
9091603043		**820174**
9091603046		**820510**
9091603050		**820442**
9091603055		**819875**
9091603058		**820442**
9091603059		**820442**
9091603060		**820510**
9091603061		**820773**
9091603062		**820174**
9091603066		**820442**
9091603069		**820510**
9091603072		**820174**
9091603075		**820512**
9091603077		**820442**
9091603078		**820439**
9091603079		**820545**
9091603080		**820443**
9091603082		**820515**
9091603083		**820172**
9091603084		**820512**
9091603089		**820514**
9091603090		**820510**
9091603093		**820173**
9091603094		**820513**
9091603099		**820174**
9091603100		**820513**
9091603101		**820173**
9091603102		**820442**
9091603103		**820443**
9091603109		**820510**
9091603112		**820515**
9091603115		**820510**

OE	PROD	Valeo
TOYOTA (.../...)		
9091603117		**820514**
9091603118		**820511**
9091603120		**820516**
9091603122		**820597**
9091603123		**820173**
9091603125		**820512**
9091603127		**820533**
9091603129		**820136**
SU00100223		**819950**
SU00100596		**506714**
SU00100884		**700413**
VAUXHALL		
3439088		**700005**
9109595		**506709**
9109810		**700016**
9110719		**820008**
9112088		**506106**
9112098		**506019**
9112305		**820527**
9119716		**506007**
9129907		**820593**
9158251		**820972**
9161123		**820432**
9161593		**506783**
9161594		**506784**
9192370		**506309**
9192793		**506007**
9192797		**506308**
9193163		**700028**
9199592		**506703**
9199595		**506785**
9201182		**506048**
9201450		**506709**
12146312		**700020**
12566029		**506866**
12566778		**700028**
12591894		**506839**
12621284		**506839**
12992692		**820151**
15326386		**700020**
15326388		**700018**
15393755		**700028**
24405895		**506837**
24409355		**506856**

OE	PROD	Valeo
VAUXHALL (.../...)		
24414452		**820591**
24420652		**820149**
24420728		**820594**
24435781		**820592**
24447862		**820590**
24456401		**820502**
24469102		**506838**
25036979		**700020**
55202510		**820965**
55221397		**506967**
90009956		**819848**
90067918		**819869**
90108636		**819746**
90200836		**819935**
90232012		**820071**
90242277		**819830**
90272361		**506005**
90273924		**506003**
90277288		**819830**
90295078		**506087**
90307873		**820212**
90322033		**820501**
90339408		**820037**
90339409		**820037**
90339500		**820038**
90340497		**819829**
90341759		**820308**
90348231		**506084**
90349239		**506007**
90349240		**506030**
90349241		**506006**
90352677		**820185**
90354822		**820050**
90355879		**820036**
90355880		**820037**
90357303		**820242**
90376209		**820311**
90409912		**506031**
90410897		**820149**
90411948		**820140**
90411977		**700021**
90412604		**819867**
90412901		**820139**
90441123		**506310**
90442207		**506080**

OE	PROD	Valeo
VAUXHALL (.../...)		
90443472		**819968**
90443473		**820070**
90444079		**506308**
90444123		**506310**
90444311		**506309**
90444649		**506527**
90449435		**820828**
90458540		**820309**
90482428		**820227**
90486126		**820050**
90486128		**820500**
90487859		**700022**
90491319		**820312**
90492455		**820309**
90499660		**820149**
90501081		**820071**
90502201		**820149**
90506496		**819830**
90506497		**820310**
90506498		**820241**
90509110		**820064**
90510182		**700023**
90510183		**700019**
90510850		**700005**
90512535		**506289**
90529846		**820507**
90536262		**820502**
90536501		**820502**
90540478		**506657**
90541520		**700028**
90541671		**506289**
90541937		**700028**
90542063		**700028**
90542606		**506601**
90543277		**506527**
90543935		**506656**
90570620		**820151**
90572899		**820503**
90573326		**820504**
91151669		**506692**
91159773		**506698**
91159950		**820025**
91160212		**506019**
92063300		**820140**
92064250		**506309**

OE	PROD	Valeo
VAUXHALL (.../...)		
92065969		**506309**
92149009		**506866**
92226211		**506856**
93161595		**506902**
93170142		**506601**
93170401		**506839**
93170697		**506048**
93171540		**506663**
93172718		**506839**
93174208		**700028**
93177340		**506716**
93177343		**820563**
93178602		**506839**
93178713		**506590**
93179114		**506590**
93179360		**506482**
93179379		**506085**
93179380		**506084**
93179381		**506031**
93181118		**506839**
93182026		**506601**
93182028		**506697**
93182029		**506601**
93182038		**506703**
93182041		**506481**
93182042		**506785**
93182043		**506657**
93189336		**506716**
93195466		**506983**
93284724		**506309**
94124093		**506085**
94214962		**820506**
94247437		**700043**
94336069		**819966**
94372762		**820072**
97062796		**506346**
97062818		**820506**
97087130		**820152**
97089891		**820506**
97094283		**819966**
97101320		**506153**
97105012		**506346**
97110386		**506482**
97110387		**506153**
97114682		**506481**

OE	PROD	Valeo
VAUXHALL (.../...)		
97114683		**506483**
97135548		**506483**
97142431		**820975**
97220278		**506481**
97227219		**700028**
97251178		**506697**
97287175		**506697**
97307468		**506697**
97361771		**820553**
97730781		**506728**
R1160009		**506003**
R1160012		**506007**
R1160013		**506006**
R1160018		**506005**
R1160020		**506087**
R1160024		**506087**
R1160025		**506153**
R1160027		**506084**
R1160028		**506153**
R1160030		**506308**
R1160034		**506080**
R1160036		**506481**
R1160039		**506483**
R1160043		**506527**
VOLKSWAGEN		
21121004		**506484**
22121011		**506798**
22121113		**820958**
25906041		**700019**
26906161		**700038**
28121004		**506513**
30121113		**820132**
36121005		**506578**
36121113		**819853**
37121010		**506667**
37121113		**820245**
44121113		**820168**
47121013		**506786**
50121010		**506603**
52121004		**506013**
60121011		**506186**
62121010		**506877**
62919501		**700050**
69121004		**506105**

OE	PROD	Valeo
VOLKSWAGEN (.../...)		
69121113		**820063**
70121114		**820983**
71121005		**506587**
74121004		**506488**
78121006		**506517**
251919501		**700044**
251959481		**819769**
357919501		**700013**
701959481		**820224**
867959481		**820034**
893959481		**820304**
00A121010		**506592**
00A121113		**820184**
021121004A		**506484**
021121004V		**506484**
021121004X		**506484**
022121011A		**506798**
022121011X		**506798**
023121004X		**506388**
025121010A		**506428**
025121010AX		**506428**
025121010B		**506713**
025121010BX		**506713**
025121010C		**506434**
025121010CX		**506434**
025121113F		**820788**
025906041A		**700011**
026121005A		**506667**
026121005C		**506667**
026121005E		**506667**
026121005F		**506667**
026121005H		**506667**
026121005K		**506667**
026121010C		**506667**
026121010CV		**506667**
026121010D		**506227**
026121010DX		**506227**
026121010E		**506667**
026121010F		**506667**
028121004V		**506513**
028121004X		**506513**
030121004B		**506282**
030121005H		**506282**
030121005L		**506282**
030121005LX		**506282**

OE	PROD	Valeo
VOLKSWAGEN (.../...)		
030121005N		**506385**
030121005NV		**506385**
030121005NX		**506385**
030121005S		**506577**
030121005T		**506385**
030121008A		**506577**
030121008C		**506577**
030121008CX		**506577**
030121008D		**506385**
030121008K		**506385**
031121004A		**506240**
031121005C		**506240**
031121005CX		**506240**
032121110B		**820962**
032121110F		**820057**
035121004A		**506190**
035121004AX		**506190**
035121005E		**506190**
035919369C		**819743**
036121005B		**506576**
036121005D		**506578**
036121005E		**506576**
036121005F		**506706**
036121005J		**506578**
036121005M		**506578**
036121005P		**506706**
036121005Q		**506576**
036121005R		**506576**
036121005S		**506576**
036121005SX		**506576**
036121008G		**506706**
036121008K		**506576**
036121008L		**506576**
036121008LX		**506576**
036121008M		**506576**
036121113B		**819854**
037121005C		**506667**
037121010A		**506667**
037121010B		**506667**
037121010C		**506667**
038121011A		**506533**
038121011AV		**506533**
038121011AX		**506533**
038121011C		**506871**
038121011CX		**506871**

OE	PROD	Valeo
VOLKSWAGEN (.../...)		
038121011D		**506699**
038121011G		**506872**
038121011GX		**506872**
038121011H		**506699**
038121011J		**506872**
038121011JX		**506872**
038121011K		**506699**
038121011KX		**506699**
03C121005B		**506867**
03C121005C		**506867**
03C121005D		**506867**
03C121005K		**506867**
03C121005KX		**506867**
03C121005L		**506867**
03C121005LX		**506867**
03C121005N		**506950**
03C121005NX		**506950**
03C121005R		**506950**
03C121005S		**506867**
03C121005SX		**506867**
03C121008B		**506950**
03C121008BX		**506950**
03C121008E		**506950**
03D121005		**506855**
03D121005X		**506855**
03D121013B		**506855**
03G121011		**506699**
03G121113		**820058**
03G121113A		**820168**
03G131501		**700424**
03G131501P		**700424**
03L121011		**506974**
03L121011B		**506872**
03L121011BX		**506872**
03L121011X		**506974**
03L131501G		**700424**
03L131501K		**700424**
03L131501R		**700448**
03L131512BM		**700435**
045121011B		**506873**
045121011BX		**506873**
045121011C		**506874**
045121011F		**506700**
045121011G		**506701**
045121011H		**506700**

OE	PROD	Valeo
VOLKSWAGEN (.../...)		
045121011HX		**506700**
045121011J		**506701**
045121011JX		**506701**
047121013J		**506786**
050121010A		**506603**
050121010AV		**506603**
050121010AX		**506603**
050121010C		**506603**
050121010X		**506603**
050121113C		**820171**
052121005A		**506013**
052121005AV		**506013**
052121005AX		**506013**
055121010X		**506227**
055919369C		**819760**
056121113A		**819867**
056121113D		**819868**
059121004C		**506591**
059121004D		**506591**
059121004E		**506591**
059121004EX		**506591**
059121113B		**819852**
060121010X		**506186**
062121010A		**506877**
066121011C		**506587**
066121011DX		**506587**
068121005A		**506667**
068121005B		**506227**
068121005C		**506227**
069121004X		**506105**
06A121011E		**506532**
06A121011F		**506532**
06A121011G		**506532**
06A121011H		**506532**
06A121011HX		**506532**
06A121011L		**506532**
06A121011LV		**506532**
06A121011LX		**506532**
06A121011T		**506532**
06A121011TX		**506532**
06A121012		**506532**
06A121012G		**506532**
06A121012X		**506532**
06A121111A		**820959**
06B121011B		**506790**

OE	PROD	Valeo
VOLKSWAGEN (.../...)		
06B121011BV		**506790**
06B121011BX		**506790**
06B121011C		**506790**
06B121011CV		**506790**
06B121011E		**506790**
06B121011EV		**506790**
06B121011H		**506790**
06B121011HX		**506790**
06B121011L		**506790**
06B121011LX		**506790**
06B121011M		**506790**
06B121011MX		**506790**
06B121011Q		**506790**
06E121005D		**506911**
06E121005F		**506911**
06E121005N		**506911**
06E121018A		**506911**
06F121011		**506876**
06F121011X		**506876**
06F121111		**820576**
070121011A		**506726**
070121011C		**506726**
070121011CX		**506726**
070121011D		**506726**
070121011DX		**506726**
071121005X		**506587**
074121004A		**506488**
074121004F		**506920**
074121004X		**506488**
074121005M		**506920**
074121005MX		**506920**
074121005N		**506920**
074121005NX		**506920**
074121005P		**506920**
075121113A		**820065**
075121113D		**820065**
077121004N		**506794**
077121004P		**506794**
077121113C		**820557**
078121004J		**506517**
078121004JV		**506517**
078121004JX		**506517**
078121004Q		**506517**
078121006X		**506517**
078121113F		**820027**

OE	PROD	Valeo
VOLKSWAGEN (.../...)		
078121113G		**820414**
191919369A		**820833**
191959481B		**819743**
191959481C		**819769**
1H0959481B		**820035**
1H0959481C		**820225**
1J0959481		**820302**
1J0959481A		**820831**
251919501A		**700036**
251919501D		**700036**
251959481K		**820229**
321959481D		**819769**
321959481E		**819743**
357919369F		**700063**
357919501A		**700012**
6U0919501		**700019**
6U0919501B		**700012**
6U0959481		**819769**
6U0959481A		**819769**
6X0959481		**820302**
701959481C		**820303**
823959481F		**819759**
8D0959481B		**820305**
J1610039346		**506468**
J1610059257		**506846**
J8342020020		**700006**
J9091603046		**820510**
J9091603078		**820439**
J9091603099		**820174**
VOLVO		
271664		**819926**
271830		**506044**
272246		**820063**
272334		**506853**
272457		**506325**
272474		**506325**
272476		**506325**
272482		**506588**
274155		**506488**
274216		**506854**
2705598		**506044**
2706810		**506026**
2712750		**506044**
2716132		**506105**

OE	PROD	Valeo
VOLVO (.../...)		
2716470		**506325**
2716645		**819926**
2717684		**506488**
2719755		**506044**
2719847		**506588**
2719854		**506325**
2719862		**506325**
2722460		**820063**
2733079		**820526**
2733426		**819882**
2734580		**819883**
2734598		**819933**
2734804		**819841**
2737286		**820063**
3435172		**819743**
3448916		**819769**
3451216		**819769**
3463730		**819743**
3470390		**820010**
3473479		**820008**
3485203		**820534**
4634259		**506026**
8653805		**820976**
8653806		**506719**
8694626		**506325**
8694627		**506853**
8694628		**506588**
8694629		**506854**
8694630		**506854**
9186486		**700037**
12571857		**506105**
13360292		**506050**
13785043		**820205**
30620725		**506698**
30637217		**820974**
30650022		**820974**
30650469		**820836**
30650751		**506325**
30658181		**700026**
30684432		**506325**
30711526		**820951**
30711527		**506715**
30725831		**506719**
30735589		**820976**
30750092		**700412**

OE	PROD	Valeo
VOLVO (.../...)		
30751022		**506854**
30751700		**506325**
30751971		**506715**
30777476		**820836**
30777590		**506694**
30874316		**506835**
31009798		**506041**
31293177		**506854**
31293668		**506854**
31319266		**506694**
32672354		**819924**
32673436		**506041**
32674392		**506041**
32873358		**506043**
32877516		**506019**
32879603		**819862**
33430935		**506019**
33442518		**506019**
33446162		**820177**
33448275		**506019**
33456260		**506019**
36000977		**700412**
36001412		**700444**
YUGO/ZASTAVA		
4471378		**506079**
5894583		**506119**
7630343		**506119**

OE	PROD	Valeo

OE	PROD	Valeo

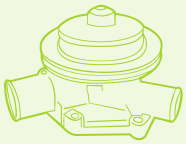

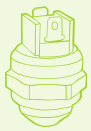

9

IAM

Valeo

Valeo

IAM	Valeo
AIRTEX	
1086-M1	**506352**
1088-M	**506032**
1091-A	**506010**
1092	**506041**
1094	**506079**
1097-L	**506098**
1099	**506337**
1102	**506100**
1105-1	**506059**
1111	**506001**
1121-M	**506245**
1125	**506148**
1128	**506247**
1130	**506248**
1130-1	**506106**
1131 V	**506358**
1133	**506347**
1133-1	**506022**
1134	**506076**
1135	**506011**
1137	**506186**
1138	**506013**
1139	**506066**
1143	**506069**
1145	**506249**
1151	**506000**
1154	**506048**
1155	**506346**
1157	**506360**
1162	**506031**
1163	**506006**
1164	**506007**
1164-C	**506030**
1165	**506003**
1166	**506089**
1167	**506005**
1168	**506084**
1175	**506122**
1180	**506026**
1189	**506036**
1190	**506105**
1193	**506178**
1194	**506190**
1195	**506019**
1196	**506256**
1197	**506165**
1198	**506167**
1205-1 V	**506092**
1206	**506170**
1207	**506088**
1212	**506035**
1217	**506063**
1218	**506141**
1219	**506052**
1222	**506134**
1227	**506009**
1228	**506858**
1229	**506008**
1230	**506158**
1235	**506078**
1236	**506060**
1237	**506097**
1239	**506043**
1241	**506074**
1242	**506073**
1243	**506072**
1244	**506040**
1247	**506044**
1248	**506050**
1287	**506155**
1288	**506075**
1292	**506377**
1293	**506091**

IAM	Valeo
AIRTEX (.../...)	
1294	**506087**
1296	**506169**
1299	**506102**
1300	**506101**
1303	**506132**
1304	**506033**
1305	**506004**
1306	**506016**
1307	**506046**
1308	**506266**
1310	**506014**
1312	**506268**
1317	**506119**
1321	**506115**
1328	**506095**
1330	**506080**
1333	**506274**
1338	**506240**
1341	**506173**
1342	**506230**
1345	**506508**
1346	**506086**
1349	**506227**
1354	**506189**
1359	**506029**
1360	**506070**
1361	**506117**
1363	**506859**
1364	**506012**
1366	**506099**
1368	**506045**
1369	**506109**
1370	**506110**
1371	**506107**
1372	**506278**
1375	**506143**
1376	**506572**
1382	**506028**
1385	**506151**
1386	**506343**
1388	**506085**
1389	**506133**
1390	**506057**
1391	**506153**
1393	**506619**
1394	**506061**
1395	**506281**
1396	**506130**
1397	**506282**
1398	**506018**
1399	**506114**
1400	**506047**
1401	**506023**
1402	**506037**
1404	**506127**
1405	**506357**
1410	**506479**
1415	**506287**
1417	**506289**
1419	**506290**
1420	**506291**
1421	**506292**
1422	**506293**
1423	**506294**
1424	**506295**
1425	**506474**
1426	**506296**
1427	**506297**
1428	**506334**
1431	**506299**
1434	**506300**
1435	**506301**
1436	**506302**

IAM	Valeo
AIRTEX (.../...)	
1438	**506304**
1439	**506380**
1442	**506305**
1443	**506306**
1444	**506307**
1446	**506308**
1447	**506309**
1448	**506310**
1449	**506311**
1450	**506312**
1452	**506314**
1453	**506315**
1454	**506316**
1455	**506317**
1456	**506367**
1457	**506486**
1460	**506320**
1463	**506323**
1465	**506325**
1473	**506383**
1475	**506330**
1504	**506386**
1510	**506388**
1512	**506390**
1513	**506391**
1515	**506368**
1516	**506394**
1523	**506397**
1524	**506340**
1525	**506345**
1527	**506473**
1530	**506385**
1533	**506514**
1537	**506622**
1541	**506516**
1543	**506517**
1545	**506518**
1547	**506519**
1549	**506521**
1550	**506481**
1551	**506482**
1552	**506483**
1554	**506522**
1555	**506613**
1556	**506523**
1557	**506524**
1558	**506525**
1559	**506526**
1561	**506528**
1562	**506529**
1563	**506530**
1564	**506531**
1567	**506534**
1568	**506535**
1569	**506634**
1572	**506559**
1573	**506560**
1575	**506562**
1576	**506563**
1577	**506564**
1578	**506573**
1579	**506574**
1580	**506575**
1581	**506576**
1582	**506577**
1583	**506578**
1584	**506579**
1585	**506580**
1586	**506581**
1587	**506582**
1589	**506584**
1590	**506585**
1592	**506587**

IAM	Valeo
AIRTEX (.../...)	
1593	**506588**
1594	**506589**
1595	**506590**
1596	**506591**
1597	**506592**
1598	**506593**
1599	**506594**
1600	**506595**
1601	**506596**
1602	**506597**
1603	**506598**
1604	**506599**
1605	**506600**
1606	**506601**
1607	**506602**
1608	**506603**
1609	**506666**
1610	**506667**
1611	**506144**
1615	**506639**
1616	**506640**
1619	**506641**
1620	**506642**
1621	**506678**
1622	**506643**
1623	**506644**
1624	**506679**
1625	**506680**
1627	**506670**
1628	**506645**
1629	**506672**
1630	**506646**
1631	**506647**
1632	**506648**
1633	**506649**
1634	**506671**
1635	**506650**
1636	**506651**
1637	**506652**
1638	**506653**
1640	**506637**
1641	**506655**
1642	**506656**
1643	**506657**
1645	**506664**
1646	**506659**
1647	**506675**
1648	**506676**
1649	**506662**
1650	**506663**
1654	**506677**
1656	**506692**
1657	**506674**
1658	**506693**
1659	**506694**
1661	**506686**
1662	**506298**
1663	**506695**
1666	**506696**
1667	**506697**
1668	**506698**
1669	**506699**
1670	**506700**
1671	**506701**
1672	**506702**
1673	**506714**
1674	**506716**
1675	**506720**
1676	**506703**
1677	**506785**
1678	**506715**
1679	**506704**
1680	**506717**

Valeo

IAM	Valeo
AIRTEX (.../...)	
1681	**506705**
1682	**506706**
1683	**506854**
1684	**506707**
1685	**506708**
1686	**506709**
1687	**506710**
1688	**506711**
1689	**506712**
1690	**506719**
1692	**506721**
1693	**506725**
1694	**506829**
1695	**506732**
1696	**506856**
1697	**506849**
1698	**506848**
1699	**506851**
1700	**506837**
1701	**506878**
1702	**506808**
1703	**506790**
1704	**506814**
1705	**506830**
1707	**506828**
1709	**506827**
1712	**506810**
1713	**506843**
1714	**506844**
1715	**506922**
1716	**506836**
1717	**506803**
1719	**506923**
1720	**506870**
1721	**506818**
1722	**506821**
1723	**506839**
1725	**506823**
1726	**506832**
1727	**506825**
1728	**506787**
1729	**506924**
1730	**506925**
1731	**506906**
1732	**506792**
1733	**506819**
1734	**506800**
1735	**506866**
1736	**506817**
1737	**506788**
1739	**506733**
1741	**506780**
1741	**506968**
1742	**506897**
1743	**506876**
1744	**506833**
1745	**506926**
1746	**506863**
1747	**506865**
1748	**506919**
1750	**506905**
1751	**506902**
1752	**506899**
1753	**506726**
1754	**506927**
1755	**506895**
1756	**506812**
1774	**506871**
1775	**506872**
1776	**506873**
1777	**506874**
1778	**506777**
1790	**506846**

IAM	Valeo
AIRTEX (.../...)	
1791	**506881**
1792	**506847**
1794	**506928**
1795	**506898**
1797	**506914**
1798	**506961**
1799	**506929**
1806	**506783**
1807	**506784**
1810	**506786**
1813	**506930**
1814	**506842**
1816	**506950**
1817	**506867**
1824	**506980**
1825	**506831**
1826	**506809**
1827	**506864**
1828	**506855**
1829	**506975**
1831	**506973**
1832	**506565**
1836	**506979**
1837	**526006**
1846	**506934**
1847	**506935**
1848	**506893**
1850	**506907**
1852	**506967**
1855	**506736**
1858	**506983**
1862	**506882**
1863	**526005**
1864	**506964**
1868	**506965**
1891	**506978**
1893	**506976**
1894	**506977**
1898	**506838**
1899	**506789**
1908	**506974**
1909	**526001**
1915	**506993**
1917	**506987**
1919	**506982**
1920	**506962**
1957	**506730**
1960	**526010**
3412	**506446**
4049	**506399**
4053	**506400**
4068	**506401**
4078	**506536**
4084	**506284**
4085	**506283**
4104	**506472**
4115	**506604**
4124	**506913**
4129	**506820**
5048	**506614**
5058	**506568**
5079	**506527**
7108	**506404**
7114	**506405**
7115	**506406**
7117	**506778**
7118	**506407**
7120	**506689**
7121	**506408**
7126	**506454**
7127	**506455**
7129	**506633**
7136	**506456**

IAM	Valeo
AIRTEX (.../...)	
7141	**506616**
7148	**506936**
7150	**506538**
7152	**506539**
7153	**506478**
7156	**506605**
7164	**506795**
9015	**506410**
9017	**506411**
9018	**506412**
9026	**506416**
9029	**506081**
9033N	**506418**
9046	**506423**
9048	**506938**
9050	**506424**
9056	**506425**
9057	**506426**
9061	**506428**
9063	**506429**
9067	**506880**
9074	**506487**
9076	**506939**
9097	**506540**
9099	**506624**
9100	**506625**
9104	**506606**
9111	**506685**
9140	**506433**
9141	**506468**
9145	**506470**
9150	**506434**
9162	**506682**
9166	**506626**
9207	**506436**
9209	**506321**
9212	**506617**
9213	**506437**
9214	**506438**
9215	**506439**
9216	**506627**
9222	**506628**
9223	**506440**
9229	**506444**
9230	**506058**
9250	**506441**
9251	**506322**
9256	**506542**
9258	**506543**
9259	**506544**
9262	**506484**
9263	**506442**
9269	**506691**
9271	**506942**
9273	**506443**
9274 R	**506920**
9274R	**506488**
9276	**506445**
9279	**506336**
9289	**506943**
9305	**506948**
9306	**506618**
9312	**506547**
9314	**506660**
9318	**506548**
9324	**506608**
9332	**506631**
9335	**506513**
9342	**506904**
9346	**506632**
9349	**506894**
9352	**506661**
9359	**506900**

IAM	Valeo
AIRTEX (.../...)	
9360	**506835**
9364	**506813**
9367	**506610**
9374	**506908**
9377	**506532**
9378	**506533**
9382	**506853**
9385	**506903**
9394	**506611**
9395	**506946**
9399	**506815**
9410	**506794**
9419	**506811**
9427	**506916**
9429	**506781**
9464 V	**506799**
9471	**506798**
9477	**506816**
9701	**506875**
AISIN	
WD-002	**506391**
WE-CI01	**506290**
WE-FI01	**506098**
WE-FI02	**506063**
WE-FI03	**506079**
WE-FI04	**506075**
WE-FO01	**506001**
WE-FO02	**506000**
WE-FO03	**506008**
WE-LR01	**506323**
WE-OP02	**506481**
WE-OP03	**506085**
WE-OP05	**506483**
WE-OP06	**506929**
WE-OP07	**506839**
WE-OP08	**506808**
WE-RE01A	**506698**
WE-RE02A	**506674**
WE-RE03A	**506725**
WE-SM01A	**506962**
WE-VW01	**506532**
WN-076	**506534**
WO-001	**506647**
WO-002	**506030**
WO-002	**506648**
WO-003	**506005**
WO-003	**506006**
WO-004	**506007**
WO-005	**506003**
WO-006	**506649**
WO-009	**506639**
WO-011	**506309**
WO-013	**506866**
WP-7801	**506815**
WPA-001	**506281**
WPA-001	**506673**
WPA-002	**506692**
WPD-021	**506390**
WPD-036	**506708**
WPF-002	**506440**
WPF-006	**506439**
WPG-018	**506153**
WPH-001	**506321**
WPH-002	**506045**
WPH-006	**506441**
WPH-006	**506679**
WPH-011	**506661**
WPH-014	**506028**
WPH-015	**506680**
WPH-018	**506322**
WPH-024	**506033**

AISIN (.../...)

IAM	Valeo
WPH-043	506812
WPH-044	506811
WPH-050V	506894
WPH-053	506878
WPH-059	506895
WPH-902	506320
WPH-904	506443
WPH-912	506810
WPK-005	506825
WPK-006	506897
WPK-010	506976
WPL-001	506151
WPM-001	506406
WPM-002	506778
WPM-004	506405
WPM-009	506404
WPM-010	506407
WPM-012	506617
WPM-014	506408
WPM-029	506736
WPM-033	506835
WPM-046	506857
WPM-047	506734
WPM-048	506936
WPM-055	506900
WPM-066	506956
WPM-069	506958
WPM-904	506019
WPM-917	506699
WPN-001	506438
WPN-002	506782
WPN-003	506023
WPN-004	506606
WPN-008	506357
WPN-009	506737
WPN-010	506394
WPN-011	506487
WPN-014	506437
WPN-015	506622
WPN-020	506037
WPN-021	506091
WPN-024	506429
WPN-026	506779
WPN-032	506377
WPN-054	506733
WPN-058	506436
WPN-059	506836
WPN-063	506368
WPN-087	506731
WPN-091	506705
WPN-092	506916
WPN-111	506702
WPN-905	506927
WPN-913	506709
WPN916	506965
WPN-918	506717
WPO-001	506659
WPO-006	506305
WPO-010	506306
WPPG-001V	506035
WPPG-002V	506029
WPPG-003V	506704
WPS-002	506870
WPS-002	506923
WPS-004	506565
WPS-006	506614
WPS-007	506568
WPS-033	506908
WPS-037V	506975
WPS-901	506903
WPS-902	506904
WPS-908	506716
WPS-908	506983

AISIN (.../...)

IAM	Valeo
WPS-909	506590
WPS-910	506575
WPT-001	506846
WPT-002	506543
WPT-003	506652
WPT-007	506468
WPT-010	506624
WPT-014	506627
WPT-015	506847
WPT-017	506411
WPT-022	506426
WPT-031	506410
WPT-033	506653
WPT-049	506412
WPT-055	506939
WPT-057V	506618
WPT-097	506938
WPT-106	506844
WPT-107	506610
WPT-108	506942
WPT-111	506848
WPT-117	506707
WPT-118	506849
WPT-120	506851
WPT-129	506843
WPT140	506982
WPT-145	506905
WPT-157	506907
WPT-901	506433
WPT-902	506117
WPT-902	506574
WPT-912	506852
WPT-913	506906
WPT-917	506714
WPV-901	506854
WPV-903	506719
WPY-006	506819
WPY-007	506814
WPY-008	506826
WPY-015	506935
WPY-020	506813
WPY-026	506922
WPY-033	506977
WPZ-001	506399
WPZ-002	506400
WPZ-003	506401
WPZ-006	506424
WPZ-012	506685
WPZ-014	506880
WPZ-027V	506948
WPZ-028V	506536
WPZ-033V	506694
WPZ-904	506544
WPZ-904	506548
WPZ-905	506626
WPZ-911	506581
WPZ-912	506472
WPZ-912	506893
WPZ-913	506529
WPZ-921	506973
WPZ-925	506604
WPZ-930	506715
WV-001D	506325
WV-002	506588
WV-005	506853
WV-006	506026
WV-007	506044
WY-003	506818
WY-004	506777
WY-006	506816
WZ-004	506413

BEHR HELLA SERVICE

106087	819853

BEHR HELLA SERVICE (.../...)

IAM	Valeo
106087300	819853
106092	819854
106092	819935
106092	820262
106092	820594
106092300	819854
106092300	819935
106092300	820262
106092300	820594
107079	819849
107083	819850
107083	819851
107087	819851
107087309	819851
107092	819846
107092309	819846
107092309	819851
107183	820057
107183	820072
107183	820191
107183	820486
107183305	819846
107183305	820057
107183305	820072
107187	819846
107187	819967
107187	820049
107187	820488
107187305	819846
107187305	819967
107187305	820049
107192	820058
107192	820290
107192305	820058
107192305	820290
108788	819853
108788300	819853
108792	819854
108792300	819854
109283	819942
109283	819943
109283	820044
109283	820172
109283	820990
109288	819874
109288	819875
109288	819942
109288	819943
109288	820068
109288	820439
109288	820481
109288	820544
109288	820767
109288349	820068
109588	819927
109590	819927
110280	819904
110583	819852
110583302	819852
110588	820040
110588	820074
113082	820525
113082307	820525
113087	819847
114087	819933
114092	820526
114581	819864
114581	819884
114581	820073
114581310	820073
114588310	820074
114879	820525
114887	819847

BEHR HELLA SERVICE (.../...)

IAM	Valeo
114892	819848
114892300	819848
115280	820791
115287	819912
116383	820070
116383344	820070
116392	820071
116392344	820071
116492	819968
116492344	819968
116492344	820050
116987	820435
116987	820500
116987344	820435
116992	820185
116992344	820185
117183	819846
117183	820057
117183	820072
117288	820051
117288	820475
117288	820547
117288350	820051
117380	819867
117380	819950
117380300	819867
117380300	819868
117380300	819950
117387	819868
117387	819869
117387300	819868
117387300	819869
117387300	819950
117387300	820148
117392	819869
117392300	819869
117392300	819926
118080	819966
118080302	819966
118087	820171
118684	820132
118684	820245
118684302	820132
118687	820065
118687	820168
118687302	820168
119392	820151
119392344	820151
119492	820502
140792	820140
140892	820071
140892	820141
140892	820258
141187	820492
141787	820491
177301	820959
187901	820576
206080	819887
208279	819872
208287	819873
208287312	819873
208287312	820480
208579	820520
208675	819870
208675312	819870
208780	820059
208780300	820059
208787	820063
209780312	819887
209780312	820063
211287	820063
211287312	820788
2113685	819970

BEHR HELLA SERVICE (.../...)

211471	**820063**
211471312	**820063**
211480312	**820063**
211487312	**820063**
211880300	**820494**
211880316	**820494**
211980	**819948**
212488	**819936**
212488	**819949**
212488	**820142**
212680	**819969**
213680	**819969**
213680319	**819969**
213685	**819970**
213685319	**819970**
214580	**820064**
214580312	**820064**
214580312	**820065**
214587	**820027**
214587312	**820027**
216182	**820557**
216182312	**820557**
216187	**820415**
216187312	**820415**
239685	**820423**
240695	**820183**
240787	**820184**
240887	**820147**
241380	**820059**
241380	**820064**
241380312	**820059**
241380312	**820064**
241695	**820419**
242285	**820421**
242687	**820589**
243592355	**820598**
244592355	**820571**
249695	**820183**
256101	**820421**
256101	**820422**
256701	**820418**
262702	**820989**
603682	**819885**
610083	**819922**
610083	**819923**
610089	**819924**
610287	**819923**
610889	**820537**
611475	**819859**
611475300	**819896**
611475300	**820177**
611483	**819896**
611483	**819946**
611483	**820008**
611483	**820177**
611483300	**819896**
611483300	**819946**
611483300	**820008**
611483300	**820177**
611489	**819862**
611489	**820008**
611489	**820471**
611489300	**819862**
611489300	**820008**
611783	**819839**
611783311	**819839**
611883	**819863**
611883	**819889**
611883352	**819863**
611889	**819889**
611889352	**819889**
611975	**819899**
611983	**819900**

BEHR HELLA SERVICE (.../...)

611983330	**819900**
611988330	**819900**
612283	**819897**
612283	**820021**
612383	**819839**
612389	**819841**
612389	**819872**
612389	**819891**
612480	**819838**
612480	**819839**
612480	**819898**
612480	**819905**
612480	**819952**
612480311	**819839**
612480311	**819898**
612480311	**819905**
612480311	**819937**
612480311	**819952**
612688	**819896**
612688322	**819896**
612782359	**820173**
613075	**819856**
613170	**819855**
613170	**819876**
613175	**819856**
613175	**819877**
613175	**819878**
613183	**819879**
613188	**819879**
614387	**819929**
614491	**820009**
614491351	**820009**
614683	**819946**
614689	**820008**
614883	**819950**
614883	**819955**
614883	**820047**
620087	**819886**
620287	**819938**
620287341	**819938**
622179	**819903**
622179347	**819903**
622583	**819852**
622583	**819865**
622583	**819882**
622583	**819895**
622583	**820176**
622587	**819837**
622670	**820444**
622783	**820476**
623179	**819903**
623389	**820025**
625587	**819837**
625780	**819939**
626480	**820153**
626587	**819958**
626587339	**819958**
626687	**819959**
626687	**820163**
626687339	**819959**
626787	**819939**
626880	**819963**
627187	**819940**
627783	**820060**
628587	**819960**
628780	**819964**
628787	**819964**
628880	**820473**
629286	**820055**
630182	**819942**
630182	**819943**
630182	**820044**
630182	**820990**

BEHR HELLA SERVICE (.../...)

630188	**819874**
630188	**819875**
630188	**820544**
630188	**820767**
630282	**819842**
630288	**820042**
630888	**819875**
631182	**819943**
632482	**820136**
632482	**820512**
632577	**820194**
632582	**820136**
633183	**819911**
633183	**819945**
633183	**820510**
633277	**820942**
633377	**819864**
633579	**820076**
633579	**820165**
633579	**820195**
633683	**819944**
633683	**820054**
633683	**820773**
633688	**820174**
633788	**820178**
640287	**820162**
640487	**820160**
640687	**820791**
640783	**819913**
640887	**820444**
641087	**820474**
641180	**820159**
641187	**820066**
641382	**820466**
641580	**820155**
641688	**820446**
641780	**820459**
641789	**820459**
641880	**820538**
642280	**820462**
642480	**820403**
642683	**820457**
642987	**820055**
643080	**820465**
643287	**820433**
643488	**820454**
643788	**820402**
643989	**820048**
644187	**820150**
644280	**820161**
644280	**820406**
644683	**820401**
644788	**820447**
644888	**820452**
644980	**820407**
645088	**820448**
645188	**820449**
645280	**820067**
645380	**820464**
645487	**820433**
645575	**820451**
645792	**820139**
645792	**820504**
645888	**820179**
650087	**820962**
660788399	**820191**
660788399	**820544**
661592399	**820592**
670389	**820434**
670789399	**819897**
686377399	**820135**
812310325	**819746**
812310325	**819759**

BEHR HELLA SERVICE (.../...)

812323	**819759**
812323325	**819759**
812409	**819745**
812409	**819759**
812409325	**819745**
812409325	**819759**
812410	**819755**
812410	**819760**
812410325	**819755**
812410325	**819760**
812411	**819746**
812411325	**819746**
812415	**819746**
812423	**819759**
812423325	**819759**
812423325	**819760**
812523	**820541**
812523325	**820541**
813029	**819757**
813510	**819743**
813642	**819786**
813642325	**819786**
813643	**819784**
813654	**819785**
813654325	**819785**
814010	**820242**
814010325	**820242**
814011	**820828**
814011325	**819830**
814011325	**820590**
814011325	**820828**
814012325	**819830**
814012325	**820590**
814012325	**820828**
814223	**819747**
814223	**819769**
814223	**819773**
814223	**819774**
814223	**820315**
814311	**820038**
814311325	**820038**
814410	**820304**
814610	**820034**
814610	**820302**
814610325	**820034**
816010	**820259**
816511	**820207**
816511329	**820207**
817002	**819769**
817006	**820232**
817017	**820229**
817225	**820308**
817510	**820222**
817510329	**820222**
817701	**820037**
817701325	**820037**
817705	**820036**
817705325	**820036**
817725	**820308**
817725325	**820308**
821002	**820315**
821030	**820225**
6PT009104001	**700016**
6PT009107031	**700021**
6PT009107151	**700002**
6PT009107171	**700001**
6PT009107241	**700036**
6PT009107271	**700018**
6PT009107301	**700014**
6PT009107421	**700012**
6PT009107431	**700015**
6PT009107551	**700011**
6PT009107681	**700000**

IAM ⇨ Valeo	BEHR HELLA SERVICE (.../...)
8MP376800201	**506035**
8MP376800401	**506019**
8MP376800541	**506639**
8MP376800611	**506674**
8MP376801571	**506110**
8MP376801791	**506249**
8MP376802211	**506446**
8MP376802611	**506648**
8MP376802681	**506456**
8MP376802701	**506437**
8MP376802781	**506037**
8MP376803731	**506341**
8MP376804081	**506108**
8MP376804171	**506230**
8MP376804491	**506394**
8MP376805401	**506655**
8MP376806061	**506122**
8MP376806711	**506296**
8MP 376 808021	**506993**
8MP376800001	**506007**
8MP376800011	**506871**
8MP376800011	**506872**
8MP376800021	**506700**
8MP376800031	**506576**
8MP376800041	**506790**
8MP376800051	**506385**
8MP376800071	**506308**
8MP376800081	**506309**
8MP376800081	**506856**
8MP376800091	**506577**
8MP376800101	**506533**
8MP376800111	**506532**
8MP376800121	**506656**
8MP376800131	**506107**
8MP376800141	**506488**
8MP376800141	**506920**
8MP376800151	**506282**
8MP376800161	**506591**
8MP376800171	**506580**
8MP376800181	**506666**
8MP376800181	**506667**
8MP376800191	**506706**
8MP376800211	**506699**
8MP376800231	**506109**
8MP376800241	**506306**
8MP376800251	**506472**
8MP376800261	**506703**
8MP376800271	**506601**
8MP376800291	**506575**
8MP376800301	**506640**
8MP376800311	**506698**
8MP376800321	**506397**
8MP376800331	**506325**
8MP376800341	**506513**
8MP376800361	**506838**
8MP376800371	**506603**
8MP376800391	**506590**
8MP376800411	**506785**
8MP376800421	**506598**
8MP376800421	**506686**
8MP376800431	**506780**
8MP376800441	**506719**
8MP376800451	**506704**
8MP376800461	**506310**
8MP376800471	**506595**
8MP376800481	**506284**
8MP376800491	**506573**
8MP376800501	**506725**
8MP376800511	**506863**
8MP376800531	**506388**
8MP376800551	**506873**
8MP376800561	**506604**
8MP376800571	**506649**

IAM ⇨ Valeo	BEHR HELLA SERVICE (.../...)
8MP376800581	**506518**
8MP376800591	**506720**
8MP376800591	**506918**
8MP376800601	**506018**
8MP376800601	**506114**
8MP376800621	**506697**
8MP376800631	**506013**
8MP376800641	**506641**
8MP376800651	**506117**
8MP376800661	**506008**
8MP376800671	**506169**
8MP376800681	**506031**
8MP376800681	**506527**
8MP376800691	**506676**
8MP376800701	**506283**
8MP376800711	**506099**
8MP376800721	**506005**
8MP376800731	**506564**
8MP376800741	**506060**
8MP376800751	**506290**
8MP376800761	**506787**
8MP376800771	**506851**
8MP376800781	**506536**
8MP376800791	**506835**
8MP376801001	**506484**
8MP376801011	**506852**
8MP376801021	**506594**
8MP376801031	**506046**
8MP376801041	**506693**
8MP376801051	**506714**
8MP376801061	**506289**
8MP376801071	**506854**
8MP376801081	**506029**
8MP376801091	**506442**
8MP376801091	**506517**
8MP376801091	**506792**
8MP376801101	**506155**
8MP376801111	**506726**
8MP376801121	**506715**
8MP376801131	**506716**
8MP376801131	**506983**
8MP376801161	**506312**
8MP376801161	**506486**
8MP376801171	**506048**
8MP376801191	**506336**
8MP376801201	**506538**
8MP376801221	**506709**
8MP376801241	**506730**
8MP376801251	**506514**
8MP376801261	**506659**
8MP376801271	**506647**
8MP376801281	**506809**
8MP376801291	**506875**
8MP376801301	**506132**
8MP376801311	**506045**
8MP376801321	**506900**
8MP376801331	**506581**
8MP376801341	**506044**
8MP376801351	**506893**
8MP376801361	**506531**
8MP376801371	**506663**
8MP376801381	**506831**
8MP376801391	**506701**
8MP376801421	**506837**
8MP376801431	**506321**
8MP376801461	**506589**
8MP376801461	**506692**
8MP376801481	**506661**
8MP376801491	**506646**
8MP376801521	**506305**
8MP376801521	**506535**
8MP376801531	**506301**
8MP376801541	**506721**

IAM ⇨ Valeo	BEHR HELLA SERVICE (.../...)
8MP376801551	**506593**
8MP376801551	**506678**
8MP376801561	**506657**
8MP376801581	**506525**
8MP376801591	**506694**
8MP376801601	**506190**
8MP376801611	**506530**
8MP376801621	**506574**
8MP376801641	**506523**
8MP376801651	**506105**
8MP376801661	**506568**
8MP376801671	**506794**
8MP376801681	**506948**
8MP376801691	**506781**
8MP376801701	**506287**
8MP376801711	**506440**
8MP376801721	**506813**
8MP376801741	**506839**
8MP376801751	**506127**
8MP376801761	**506864**
8MP376801771	**506141**
8MP376802011	**506441**
8MP376802011	**506679**
8MP376802021	**506100**
8MP376802041	**506671**
8MP376802061	**506521**
8MP376802071	**506800**
8MP376802081	**506777**
8MP376802091	**506930**
8MP376802111	**506548**
8MP376802121	**506406**
8MP376802131	**506516**
8MP376802141	**506614**
8MP376802151	**506736**
8MP376802161	**506529**
8MP376802181	**506622**
8MP376802191	**506587**
8MP376802201	**506080**
8MP376802231	**506967**
8MP376802241	**506474**
8MP376802261	**506227**
8MP376802271	**506434**
8MP376802281	**506849**
8MP376802291	**506300**
8MP376802301	**506842**
8MP376802331	**506401**
8MP376802361	**506291**
8MP376802381	**506294**
8MP376802411	**506617**
8MP376802431	**506818**
8MP376802441	**506011**
8MP376802461	**506652**
8MP376802471	**506876**
8MP376802481	**506789**
8MP376802491	**506186**
8MP376802501	**506307**
8MP376802511	**506602**
8MP376802531	**506675**
8MP376802541	**506833**
8MP376802551	**506653**
8MP376802561	**506858**
8MP376802581	**506846**
8MP376802591	**506148**
8MP376802601	**506926**
8MP376802631	**506078**
8MP376802651	**506651**
8MP376802671	**506347**
8MP376802691	**506089**
8MP376802711	**506588**
8MP376802721	**506660**
8MP376802741	**506855**
8MP376802751	**506870**
8MP376802761	**506819**

IAM ⇨ Valeo	BEHR HELLA SERVICE (.../...)
8MP376802771	**506919**
8MP376802781	**506737**
8MP376802791	**506578**
8MP376803011	**506526**
8MP376803031	**506848**
8MP376803071	**506836**
8MP376803081	**506956**
8MP376803111	**506843**
8MP376803131	**506631**
8MP376803141	**506014**
8MP376803151	**506311**
8MP376803171	**506882**
8MP376803181	**506936**
8MP376803191	**506240**
8MP376803201	**506003**
8MP376803231	**506299**
8MP376803241	**506637**
8MP376803251	**506914**
8MP376803271	**506097**
8MP376803301	**506009**
8MP376803311	**506380**
8MP376803321	**506022**
8MP376803331	**506816**
8MP376803341	**506705**
8MP376803351	**506711**
8MP376803361	**506084**
8MP376803371	**506047**
8MP376803391	**506702**
8MP376803411	**506911**
8MP376803421	**506899**
8MP376803431	**506006**
8MP376803441	**506151**
8MP376803451	**506707**
8MP376803461	**506534**
8MP376803471	**506894**
8MP376803491	**506400**
8MP376803491	**506685**
8MP376803501	**506732**
8MP376803511	**506036**
8MP376803521	**506428**
8MP376803531	**506057**
8MP376803561	**506293**
8MP376803581	**506662**
8MP376803591	**506696**
8MP376803621	**506320**
8MP376803641	**506929**
8MP376803671	**506825**
8MP376803681	**506408**
8MP376803691	**506786**
8MP376803701	**506844**
8MP376803701	**506906**
8MP376804021	**506066**
8MP376804031	**506059**
8MP376804061	**506032**
8MP376804071	**506001**
8MP376804111	**506074**
8MP376804131	**506278**
8MP376804141	**506473**
8MP376804151	**506357**
8MP376804211	**506016**
8MP376804231	**506000**
8MP376804241	**506178**
8MP376804251	**506170**
8MP376804261	**506043**
8MP376804271	**506040**
8MP376804281	**506076**
8MP376804291	**506072**
8MP376804301	**506030**
8MP376804311	**506087**
8MP376804321	**506880**
8MP376804331	**506562**
8MP376804341	**506830**
8MP376804351	**506266**

BEHR HELLA SERVICE (.../...)

8MP376804361	506012
8MP376804381	506560
8MP376804401	506085
8MP376804411	506028
8MP376804431	506482
8MP376804441	506073
8MP376804471	506642
8MP376804481	506281
8MP376804481	506673
8MP376804521	506343
8MP376804551	506624
8MP376804561	506292
8MP376804581	506297
8MP376804601	506106
8MP376804611	506304
8MP376804621	506298
8MP376804651	506317
8MP376804661	506153
8MP376804671	506314
8MP376804681	506316
8MP376804691	506315
8MP376804731	506345
8MP376804741	506579
8MP376804751	506443
8MP376804761	506680
8MP376804761	506943
8MP376804771	506346
8MP376805011	506323
8MP376805031	506483
8MP376805041	506784
8MP376805081	506618
8MP376805091	506643
8MP376805101	506596
8MP376805111	506723
8MP376805121	506542
8MP376805171	506898
8MP376805191	506481
8MP376805201	506664
8MP376805211	506788
8MP376805221	506783
8MP376805241	506907
8MP376805271	506975
8MP376805281	506717
8MP376805321	506710
8MP376805341	506867
8MP376805361	506728
8MP376805371	506973
8MP376805391	506729
8MP376805411	506968
8MP376805421	506902
8MP376805431	506955
8MP376805441	506010
8MP376805451	506582
8MP376805481	506092
8MP376805491	506041
8MP376805511	506492
8MP376805521	506026
8MP376805561	506069
8MP376805601	506245
8MP376805621	506063
8MP376805661	506328
8MP376805701	506134
8MP376805711	506859
8MP376805761	506247
8MP376805781	506075
8MP376805791	506079
8MP376806011	506004
8MP376806041	506023
8MP376806091	506095
8MP376806101	506052
8MP376806121	506861
8MP376806131	506508
8MP376806171	506070

BEHR HELLA SERVICE (.../...)

8MP376806201	506158
8MP376806211	506689
8MP376806231	506050
8MP376806241	506165
8MP376806271	506061
8MP376801631	506061
8MP376806301	506268
8MP376806311	506143
8MP376806341	506256
8MP376806391	506610
8MP376806411	506167
8MP376806431	506424
8MP376806441	506102
8MP376806481	506086
8MP376806491	506133
8MP376806501	506713
8MP376806521	506722
8MP376806571	506619
8MP376806601	506123
8MP376806611	506130
8MP376806621	506286
8MP376806631	506479
8MP376806651	506340
8MP376806681	506101
8MP376806721	506295
8MP376807001	506444
8MP376807011	506302
8MP376807021	506334
8MP376807021	506379
8MP376807041	506519
8MP376807051	506522
8MP376807061	506547
8MP376807081	506367
8MP376807081	506620
8MP376807101	506628
8MP376807111	506544
8MP376807141	506670
8MP376807151	506599
8MP376807151	506600
8MP376807171	506645
8MP376807181	506592
8MP376807191	506691
8MP376807211	506597
8MP376807221	506524
8MP376807221	506613
8MP376807241	506584
8MP376807251	506586
8MP376807261	506585
8MP376807271	506650
8MP376807291	506144
8MP376807301	506115
8MP376807311	506559
8MP376807321	506563
8MP376807341	506928
8MP376807361	506942
8MP376807371	506908
8MP376807381	506672
8MP376807391	506853
8MP376807401	506712
8MP376807411	506815
8MP376807421	506865
8MP376807431	506798
8MP376807451	506916
8MP376807491	506695
8MP376807501	506934
8MP376807541	506922
8MP376807551	506927
8MP376807581	506964
8MP376807581	526005
8MP376807631	506352
C56887	820061
C78587	819938
G100688	820935

BEHR HELLA SERVICE (.../...)

G103388	820578
G89688	820562
G96888	820577
H04789	820430

BLUEPRINT

ADA109104	506825
ADA109105	506694
ADA109109	506798
ADA109109	506799
ADA109118	506539
ADC49101	506964
ADC49101	506965
ADC49102	506691
ADC49107	506406
ADC49109	506408
ADC49112	506779
ADC49112	506780
ADC49117	506618
ADC49117	506619
ADC49122	506405
ADC49124	506899
ADC49133	506903
ADC49137	506817
ADC49148	506967
ADC49153	506818
ADC49153	506962
ADC49160	506737
ADC49164	506783
ADC49164	506784
ADD69110	506810
ADD69116	506394
ADD69117	506809
ADG09105	506003
ADG09106	506652
ADG09107	506032
ADG09107	506033
ADG09108	506820
ADG09109	506859
ADG09116	506828
ADG09117	506651
ADG09123	506815
ADG09125	506821
ADG09131	506816
ADG09135	506407
ADG09166	506869
ADG09171	506900
ADH29108	506426
ADH29108	506428
ADH29108	506429
ADH29110	506423
ADH29114	506030
ADH29115	506433
ADH29116	506047
ADH29120	506322
ADH29120	506323
ADH29123	506443
ADH29125	506445
ADH29129	506663
ADH29129	506664
ADH29130	506946
ADH29133	506897
ADH29136	506814
ADH29137	506321
ADH29143	506812
ADH29143	506813
ADK89105	506924
ADK89107	506617
ADK89109	506907
ADK89109	506908
ADK89110	506905
ADK89117	506719

BLUEPRINT (.../...)

ADK89117	526001
ADK89118	506728
ADK89119C	506592
ADK89120	506677
ADK89121	506913
ADK89123	506882
ADM59103	506425
ADM59109	506400
ADM59120	506628
ADM59122	506950
ADM59122	506952
ADM59122	506953
ADN19103	506105
ADN19103	506106
ADN19107	506025
ADN19127	506785
ADN19133	506778
ADN19136	506439
ADN19139	506838
ADN19144	506692
ADN19147	506736
ADN19152	506686
ADN19152	506689
ADN19156	506610
ADN19167	506706
ADN19167	506707
ADN19175	506704
ADN19178	506918
ADN19180C	506926
ADN19180C	506927
ADN19182	506925
ADN19186	506678
ADR169101	506575
ADR169102	506656
ADR169102	506657
ADS79110	506441
ADS79110	506442
ADS79112	506440
ADT39102	506418
ADT39103	506411
ADT39106	506412
ADT391100	506853
ADT391100	506854
ADT391106	506987
ADT39115	506424
ADT39120	506893
ADT39120	506894
ADT39121	506939
ADT39123	506942
ADT39126	506613
ADT39128	506436
ADT39129	506627
ADT39133	506852
ADT39134	506848
ADT39136	506625
ADT39137	506437
ADT39140	506632
ADT39145	506548
ADT39151	506693
ADT39167C	506948
ADT39170	506709
ADT39175	506847
ADT39186	506544
ADV189102	506701
ADV189103	506879
ADV189104	506874
ADV189104	506976
ADZ99107	506930
ADZ99107	506934
ADZ99107	506935
ADZ99108	506542
ADZ99123	506086
ADZ99124	506310

BLUEPRINT (.../...)

ADZ99127	**506483**
ADZ99129	**506699**
ADZ99131	**506711**

BUGATTI

PA0010	**506079**
PA0012	**506492**
PA0014	**506352**
PA0018	**506063**
PA0019	**506075**
PA0020	**506248**
PA0022	**506860**
PA0024	**506327**
PA0026	**506178**
PA0034	**506331**
PA0035	**506134**
PA0040	**506148**
PA0042	**506151**
PA0055	**506108**
PA0064	**506245**
PA0065	**506247**
PA0071	**506011**
PA0075	**506170**
PA0083	**506346**
PA0091	**506006**
PA0092	**506031**
PA0093	**506048**
PA0095	**506003**
PA0099	**506007**
PA0100	**506089**
PA0105	**506032**
PA0120	**506091**
PA0121	**506377**
PA0135	**506100**
PA0138	**506097**
PA0140	**506095**
PA0142	**506078**
PA0144	**506061**
PA0146	**506060**
PA0147	**506057**
PA0148	**506058**
PA0171	**506341**
PA0177	**506337**
PA0180	**506059**
PA0186	**506073**
PA0188	**506076**
PA0190	**506074**
PA0193	**506330**
PA0194	**506043**
PA0195	**506072**
PA0196	**506328**
PA0201	**506070**
PA0203	**506069**
PA0207	**506249**
PA0209	**506052**
PA0210	**506278**
PA0211	**506141**
PA0212	**506169**
PA0213	**506266**
PA0214	**506046**
PA0226	**506009**
PA0227	**506173**
PA0231	**506001**
PA0234R	**506000**
PA0239	**506165**
PA0240	**506858**
PA0242	**506158**
PA0243	**506008**
PA0246	**506012**
PA0247	**506529**
PA0252T	**506010**
PA0257	**506016**

BUGATTI (.../...)

PA0259	**506004**
PA0273	**506861**
PA0278	**506508**
PA0280	**506859**
PA0284	**506050**
PA0307	**506033**
PA0313	**506013**
PA0315	**506186**
PA0316	**506190**
PA0317	**506105**
PA0319	**506667**
PA0320	**506066**
PA0320C	**506227**
PA0321	**506428**
PA0323	**506434**
PA0324	**506713**
PA0325	**506132**
PA0337	**506413**
PA0350	**506040**
PA0351	**506133**
PA0363	**506256**
PA0507	**506562**
PA0508	**506268**
PA0509	**506144**
PA0510	**506143**
PA0512	**506119**
PA0512	**506386**
PA0516	**506560**
PA0519	**506115**
PA0527	**506167**
PA0610	**506411**
PA10001	**506942**
PA10002	**506699**
PA10002	**506871**
PA10002	**506872**
PA10003	**506882**
PA10005	**506781**
PA10006	**506698**
PA10007	**506783**
PA10008	**506784**
PA10012	**506704**
PA10013	**506714**
PA10014	**506697**
PA10015	**506919**
PA10017	**506808**
PA10018	**506865**
PA10019	**506703**
PA10020	**506785**
PA10021	**506794**
PA10022	**506114**
PA10022	**506696**
PA10023	**506831**
PA10024	**506930**
PA10025	**506788**
PA10028	**506842**
PA10029	**506907**
PA10030	**506838**
PA10031	**506716**
PA10031	**506983**
PA10032	**506728**
PA10033	**506837**
PA10034	**506777**
PA10034	**506897**
PA10035	**506661**
PA10036	**506680**
PA10036	**506943**
PA10037	**506675**
PA10038	**506832**
PA10040	**506854**
PA10042	**506706**
PA10043	**506867**
PA10044	**506798**
PA10045	**506855**

BUGATTI (.../...)

PA10047	**506843**
PA10048	**506844**
PA10049	**506701**
PA10049	**506874**
PA10051	**506725**
PA10052	**506715**
PA10053	**506702**
PA10055	**506705**
PA10056	**506916**
PA10057	**506717**
PA10058	**506975**
PA10059	**506730**
PA10060	**506911**
PA10063	**506721**
PA10064	**506899**
PA10065	**506876**
PA10067	**506835**
PA10068	**506323**
PA10069	**506446**
PA10071	**506543**
PA10072	**506679**
PA10073	**506809**
PA10074	**506875**
PA10075	**506968**
PA10076	**506851**
PA10077	**506864**
PA10078	**506833**
PA10082	**506726**
PA10084	**506877**
PA10086	**506711**
PA10087	**506852**
PA10088	**506914**
PA10090	**506926**
PA10092	**506973**
PA10093	**506878**
PA10094	**506905**
PA10095	**506789**
PA10096	**506708**
PA10097	**506906**
PA10099	**506976**
PA10101	**506816**
PA10102	**506813**
PA10103	**506819**
PA10104	**506962**
PA10105	**506866**
PA10107	**506893**
PA10108	**506908**
PA10109	**506980**
PA10110	**506987**
PA10111	**506955**
PA10113	**526005**
PA10114	**506978**
PA10115	**506534**
PA10117	**506902**
PA10119	**506977**
PA10121	**506922**
PA10123	**506964**
PA10124	**506618**
PA10125	**506961**
PA10127	**506849**
PA10128	**506894**
PA10129	**506812**
PA10130	**506810**
PA10135	**506710**
PA10138	**506325**
PA10141	**506950**
PA10142	**506952**
PA10143	**506601**
PA10144	**506736**
PA10145	**506993**
PA10146	**526010**
PA10148	**506974**
PA10149	**526006**

BUGATTI (.../...)

PA10152	**506880**
PA10153	**506967**
PA10154	**506720**
PA10154	**506918**
PA10155	**506439**
PA10157	**506823**
PA10158	**506979**
PA10160	**506826**
PA10196	**506982**
PA10200	**506965**
PA10209	**506863**
PA10218	**506988**
PA1051	**506088**
PA1053	**506029**
PA1080	**506005**
PA1081	**506087**
PA1082	**506030**
PA1083	**506084**
PA1084	**506085**
PA1085	**506080**
PA1171	**506473**
PA1172	**506099**
PA1173	**506086**
PA1261	**506102**
PA1262	**506101**
PA5001	**506281**
PA5001	**506673**
PA5003	**506286**
PA5004	**506479**
PA5006	**506036**
PA5007	**506335**
PA5009	**506518**
PA5010	**506525**
PA5013	**506590**
PA5014	**506692**
PA5101	**506130**
PA5102	**506336**
PA5103	**506442**
PA5103	**506517**
PA5103	**506792**
PA5105	**506644**
PA5107	**506603**
PA5108	**506513**
PA5111	**506602**
PA5112	**506790**
PA5113	**506532**
PA5115	**506591**
PA5116	**506533**
PA5202	**506018**
PA5204	**506320**
PA5206	**506322**
PA5401	**506107**
PA5402	**506110**
PA5403	**506109**
PA5405	**506445**
PA5407	**506631**
PA5408	**506521**
PA5411	**506862**
PA5412	**506799**
PA5413	**506664**
PA5414	**506646**
PA5415	**506800**
PA5418	**506663**
PA5419	**506662**
PA5501	**506117**
PA5501	**506574**
PA5502	**506014**
PA5505	**506531**
PA5506	**506530**
PA5507	**506643**
PA5508	**506596**
PA5509	**506575**
PA5902	**506340**

BUGATTI (.../...)

IAM	Valeo
PA5903	506474
PA5904	506293
PA5908	506294
PA5909	506295
PA5910	506722
PA5911	506297
PA5912	506334
PA5912	506379
PA5914	506298
PA5916	506299
PA5917	506519
PA5919	506106
PA5920	506304
PA5921	506302
PA5922	506514
PA5924	506523
PA5926	506516
PA5928	506563
PA5930	506559
PA5932	506670
PA5933	506669
PA5935	506597
PA5936	506645
PA5937	506524
PA5937	506613
PA5939	506584
PA5940	506586
PA5941	506585
PA5942	506640
PA5943	506598
PA5943	506686
PA5944	506695
PA5945	506397
PA5946	506712
PA6001	506127
PA6002	506047
PA6005	506287
PA6006	506301
PA6007	506300
PA6008	506642
PA6009	506283
PA6010	506472
PA6011	506581
PA6012	506641
PA6013	506604
PA6015	506694
PA6016	506693
PA6202	506425
PA6501	506123
PA6701	506424
PA6802	506380
PA6804	506343
PA6805	506639
PA6807	506619
PA6808	506306
PA6810	506444
PA6811	506305
PA6811	506535
PA6814	506307
PA6815	506632
PA6816	506547
PA6817	506628
PA6818	506660
PA6819	506671
PA6820	506593
PA6820	506678
PA6821	506650
PA6822	506651
PA6823	506787
PA6824	506676
PA6906	506936
PA6908	506538
PA7104	506023

BUGATTI (.../...)

IAM	Valeo
PA7106	506037
PA7107	506429
PA7108	506436
PA7109	506368
PA7110	506622
PA7112	506437
PA7112	506737
PA7201	506482
PA7202	506309
PA7202	506856
PA7203	506310
PA7204	506308
PA7205	506153
PA7208	506657
PA7209	506527
PA7210	506483
PA7213	506656
PA7214	506481
PA7217	506839
PA7402	506292
PA7404	506290
PA7405	506291
PA7406	506582
PA7407	506595
PA7409	506719
PA7701	506019
PA7703	506311
PA7704	506317
PA7705	506345
PA7708	506312
PA7708	506486
PA7709	506367
PA7710	506315
PA7711	506316
PA7712	506314
PA7713	506579
PA7714	506573
PA7715	506564
PA7716	506637
PA7717	506580
PA7717	506729
PA7718	506655
PA7719	506599
PA7719	506600
PA8101	506440
PA8502	506652
PA8503	506653
PA8506	506426
PA8507	506707
PA8508	506848
PA8701	506388
PA8702	506282
PA8703	506240
PA8704	506385
PA8705	506484
PA8706	506592
PA8707	506577
PA8708	506587
PA8709	506578
PA8710	506576
PA8711	506786
PA8712	506700
PA8712	506873
PA8713	506488
PA8802	506588
PA8804	506853
PA9002	506929
PA9102	506647
PA9103	506649
PA9104	506659
PA9105	506953
PA9201	506406
PA9202	506818

BUGATTI (.../...)

IAM	Valeo
PA9203	506617
PA9302	506614
PA9303	506568

DELPHI

EG1030512B1	700407
TMC1001	819743
TMC1002	819744
TMC1003	819745
TMC1004	819746
TMC1007	819747
TMC1008	819748
TMC1009	819749
TMC1011	819751
TMC1012	819752
TMC1013	819753
TMC1014	819754
TMC1015	819755
TMC1016	819756
TMC1017	819757
TMC1018	819758
TMC1019	819759
TMC1020	819760
TMC1021	819761
TMC1022	819762
TMC1024	819766
TMC1025	819767
TMC1026	819768
TMC1027	819769
TMC1028	819770
TMC1029	819771
TMC1030	819772
TMC1032	819781
TMC1033	819774
TMC1034	819775
TMC1101	820030
TMC1102	820031
TMC1103	820828
TMC1104	820032
TMC1105	820033
TMC1106	820034
TMC1107	820035
TMC1109	820036
TMC1111	820037
TMC1112	819764
TMC1113	819765
TMC1114	819825
TMC1115	819784
TMC1116	819785
TMC1117	819786
TMC1118	819826
TMC1119	819827
TMC1120	819828
TMC1121	819829
TMC1122	819830
TMC1123	819782
TMC1124	819783
TMS1003	819838
TMS1004	819839
TMS1005	819840
TMS1010	819845
TMS1011	820049
TMS1013	819847
TMS1013	820051
TMS1014	819848
TMS1018	819849
TMS1019	819850
TMS1020	819851
TMS1021	819852
TMS1024	819855
TMS1026	819856
TMS1029	819859

DELPHI (.../...)

IAM	Valeo
TMS1035	819863
TMS1036	819864
TMS1037	819866
TMS1039	819867
TMS1040	819868
TMS1041	819869
TMS1044	819873
TMS1046	819875
TMS1047	819876
TMS1048	819877
TMS1049	819878
TMS1050	819879
TMS1052	819881
TMS1054	819882
TMS1055	819883
TMS1056	819885
TMS1057	819886
TMS1058	819887
TMS1060	819889
TMS1062	819891
TMS1064	820063
TMS1065	819894
TMS1068	819896
TMS1070	819897
TMS1071	819898
TMS1073	819899
TMS1074	819900
TMS1077	819903
TMS1078	819904
TMS1079	819905
TMS1084	819911
TMS1085	819912
TMS1085	820791
TMS1086	819913
TMS1092	819921
TMS1093	819922
TMS1094	819923
TMS1095	819924
TMS1097	819929
TMS1098	819930
TMS1102	819933
TMS1103	819935
TMS1104	819936
TMS1105	819937
TMS1106	819938
TMS1107	819939
TMS1108	819940
TMS1115	819963
TMS1116	819948
TMS1117	819949
TMS1201	819842
TMS1202	820290
TMS1204	820040
TMS1205	819865
TMS1206	820077
TMS1207	819870
TMS1210	819872
TMS1213	819884
TMS1215	820042
TMS1217	819915
TMS1218	819916
TMS1220	819926
TMS1221	820541
TMS1223	819934
TMS1224	820043
TMS1225	819942
TMS1226	819943
TMS1227	820044
TMS1228	820010
TMS1229	819946
TMS1232	819950
TMS1233	819951
TMS1234	819952

IAM	Valeo
DELPHI (.../...)	
TMS1236	**820009**
TMS1237	**819953**
TMS1238	**819954**
TMS1239	**819955**
TMS1240	**819956**
TMS1241	**820047**
TMS1242	**820048**
TMS1245	**820008**
TMS1246	**819964**
TMS1250	**819968**
TMS1251	**819969**
TMS1252	**819970**
TMS1254	**820025**
TMS1255	**820051**
TMS1258	**820023**
TMS1259	**820027**
TMS1260	**820053**
TMS1261	**820054**
TMS1262	**820055**
TMS1263	**820056**
TMS1264	**820058**
TMS1265	**820059**
TMS1266	**820060**
TMS1267	**820061**
TMS1269	**820063**
TMS1270	**820064**
TMS1271	**820065**
TMS1272	**820066**
TMS1273	**820067**
TMS1274	**820068**
TMS1275	**820069**
TMS1277	**820072**
TMS1278	**820074**
TMS1281	**820050**
TMS1282	**820057**
TMS1284	**819927**
WP1009	**506070**
WP1020	**506337**
WP1023	**506341**
WP1025	**506059**
WP1027	**506041**
WP1033	**506076**
WP1034	**506043**
WP1036	**506019**
WP1038	**506073**
WP1039	**506074**
WP1040	**506072**
WP1041	**506330**
WP1050	**506036**
WP1053	**506141**
WP1056	**506052**
WP1058	**506352**
WP1059	**506079**
WP1062	**506075**
WP1064	**506860**
WP1066	**506106**
WP1067	**506397**
WP1068	**506256**
WP1070	**506165**
WP1073	**506001**
WP1075	**506000**
WP1076	**506008**
WP1077	**506858**
WP1081	**506100**
WP1082	**506097**
WP1084	**506078**
WP1085	**506060**
WP1090	**506003**
WP1091	**506006**
WP1092	**506148**
WP1098	**506105**
WP1101	**506032**
WP1102	**506011**

IAM	Valeo
DELPHI (.../...)	
WP1103	**506108**
WP1122	**506245**
WP1123	**506247**
WP1125	**506122**
WP1128	**506170**
WP1130	**506088**
WP1162	**506012**
WP1254	**506134**
WP1262	**506007**
WP1291	**506005**
WP1292	**506030**
WP1347	**506132**
WP1366	**506560**
WP1415	**506143**
WP1434	**506292**
WP1435	**506144**
WP1437	**506639**
WP1486	**506151**
WP1496	**506029**
WP1506	**506099**
WP1507	**506014**
WP1508	**506340**
WP1515	**506127**
WP1527	**506328**
WP1601	**506117**
WP1602	**506294**
WP1603	**506290**
WP1608	**506302**
WP1610	**506304**
WP1611	**506284**
WP1612	**506289**
WP1613	**506297**
WP1614	**506283**
WP1615	**506259**
WP1617	**506169**
WP1618	**506278**
WP1619	**506107**
WP1702	**506230**
WP1703	**506248**
WP1706	**506040**
WP1713	**506084**
WP1717	**506266**
WP1718	**506004**
WP1720	**506529**
WP1721	**506133**
WP1722	**506167**
WP1723	**506281**
WP1723	**506673**
WP1724	**506130**
WP1725	**506240**
WP1726	**506388**
WP1727	**506282**
WP1728	**506018**
WP1729	**506114**
WP1729	**506696**
WP1730	**506045**
WP1731	**506109**
WP1732	**506110**
WP1733	**506023**
WP1734	**506037**
WP1739	**506295**
WP1743	**506343**
WP1745	**506345**
WP1746	**506311**
WP1749	**506312**
WP1749	**506486**
WP1751	**506314**
WP1752	**506315**
WP1753	**506317**
WP1755	**506394**
WP1756	**506291**
WP1757	**506424**
WP1758	**506298**

IAM	Valeo
DELPHI (.../...)	
WP1759	**506325**
WP1760	**506063**
WP1761	**506321**
WP1762	**506322**
WP1763	**506323**
WP1764	**506153**
WP1765	**506309**
WP1767	**506306**
WP1768	**506307**
WP1770	**506301**
WP1771	**506287**
WP1772	**506920**
WP1774	**506385**
WP1802	**506599**
WP1802	**506600**
WP1805	**506579**
WP1806	**506086**
WP1808	**506573**
WP1810	**506299**
WP1811	**506585**
WP1815	**506692**
WP1816	**506942**
WP1821	**506653**
WP1822	**506050**
WP1823	**506178**
WP1824	**506562**
WP1830	**506561**
WP1831	**506115**
WP1832	**506046**
WP1833	**506859**
WP1834	**506123**
WP1835	**506080**
WP1837	**506474**
WP1839	**506335**
WP1841	**506316**
WP1843	**506308**
WP1845	**506320**
WP1847	**506300**
WP1848	**506336**
WP1849	**506584**
WP1851	**506514**
WP1852	**506513**
WP1853	**506622**
WP1854	**506472**
WP1854	**506893**
WP1857	**506518**
WP1858	**506523**
WP1859	**506580**
WP1859	**506729**
WP1860	**506564**
WP1861	**506581**
WP1862	**506530**
WP1863	**506531**
WP1864	**506582**
WP1866	**506643**
WP1867	**506578**
WP1870	**506722**
WP1873	**506559**
WP1874	**506661**
WP1875	**506576**
WP1877	**506577**
WP1878	**506593**
WP1880	**506596**
WP1884	**506737**
WP1887	**506586**
WP1892	**506637**
WP1893	**506655**
WP1897	**506533**
WP1898	**506590**
WP1899	**506524**
WP1899	**506613**
WP1902	**506525**
WP1903	**506598**

IAM	Valeo
DELPHI (.../...)	
WP1904	**506595**
WP1905	**506527**
WP1906	**506534**
WP1907	**506535**
WP1908	**506695**
WP1910	**506563**
WP1911	**506787**
WP2013	**506048**
WP2016	**506377**
WP2018	**506091**
WP2022	**506418**
WP2029	**506016**
WP2031	**506033**
WP2045	**506089**
WP2052	**506861**
WP2055	**506572**
WP2060	**506009**
WP2064	**506540**
WP2073	**506425**
WP2081	**506404**
WP2109	**506186**
WP2110	**506428**
WP2110	**506434**
WP2113	**506058**
WP2115	**506619**
WP2116	**506057**
WP2117	**506411**
WP2136	**506938**
WP2145	**506327**
WP2159	**506713**
WP2164	**506380**
WP2169	**506227**
WP2171	**506286**
WP2172	**506479**
WP2173	**506101**
WP2173	**506102**
WP2174	**506442**
WP2175	**506631**
WP2180	**506268**
WP2181	**506334**
WP2181	**506379**
WP2191	**506293**
WP2196	**506441**
WP2203	**506346**
WP2204	**506400**
WP2207	**506436**
WP2213	**506440**
WP2214	**506870**
WP2219	**506543**
WP2221	**506846**
WP2224	**506625**
WP2225	**506928**
WP2227	**506095**
WP2228	**506444**
WP2232	**506367**
WP2248	**506936**
WP2251	**506627**
WP2254	**506516**
WP2258	**506847**
WP2259	**506408**
WP2263	**506669**
WP2263	**506670**
WP2265	**506603**
WP2266	**506538**
WP2270	**506484**
WP2271	**506443**
WP2275	**506736**
WP2277	**506733**
WP2282	**506592**
WP2285	**506521**
WP2285	**506800**
WP2286	**506647**
WP2287	**506649**

DELPHI (.../...)

WP2288	**506604**
WP2289	**506818**
WP2290	**506660**
WP2291	**506651**
WP2294	**506526**
WP2296	**506532**
WP2297	**506587**
WP2298	**506786**
WP2356	**506305**
WP2370	**506711**
WP2372	**506799**
WP2374	**506719**
WP2375	**506710**
WP2376	**506720**
WP2376	**506918**
WP2378	**506645**
WP2383	**506712**
WP2384	**506519**
WP2387	**506693**
WP2388	**506714**
WP2390	**506777**
WP2393	**506641**
WP2395	**506575**
WP2399	**506686**
WP2401	**506808**
WP2403	**506628**
WP2404	**506732**
WP2406	**506650**
WP2410	**506672**
WP2411	**506640**
WP2413	**506794**
WP2414	**506790**
WP2417	**506857**
WP2424	**506894**
WP2426	**506468**
WP2428	**506699**
WP2428	**506871**
WP2429	**506873**
WP2436	**506646**
WP2438	**506662**
WP2439	**506663**
WP2445	**506874**
WP2450	**506674**
WP2455	**506698**
WP2462	**506618**
WP2464	**506707**
WP2474	**506855**
WP2475	**506706**
WP2477	**506708**
WP2503	**506574**
WP2520	**506704**
WP2530	**506679**
WP2540	**506842**
WP2547	**506864**
WP2557	**506721**
WP2563	**506812**
WP2573	**506973**
WP2574	**506851**
WP2577	**506522**
WP2588	**506876**
WP2597	**506905**
WP2599	**506817**
WP2601	**506877**
WP2603	**506878**
WP2605	**506897**
WP2613	**506914**
WP2619	**506950**
YP86015-11B1	**506667**

DOLZ

A131	**506673**
A140	**506102**

DOLZ (.../...)

A142	**506285**
A145	**506861**
A148	**506101**
A149	**506286**
A150	**506066**
A151	**506666**
A152	**506190**
A154	**506105**
A156	**506186**
A158	**506132**
A159	**506013**
A160	**506227**
A164	**506282**
A165	**506428**
A167	**506434**
A167	**506713**
A169	**506130**
A170	**506240**
A171	**506336**
A172	**506442**
A174	**506517**
A175	**506644**
A176	**506388**
A179	**506385**
A181	**506484**
A182	**506513**
A183	**506594**
A183	**506667**
A184	**506603**
A186	**506532**
A187	**506533**
A188	**506578**
A189	**506577**
A190	**506591**
A191	**506576**
A192	**506587**
A193	**506871**
A194	**506794**
A195	**506792**
A196	**506873**
A197	**506874**
A198	**506790**
A199	**506877**
A200	**506706**
A201	**506781**
A202	**506798**
A203	**506872**
A205	**506700**
A206	**506701**
A207	**506855**
A210	**506726**
A212	**506876**
A213	**506911**
A218	**506867**
A219	**506950**
A222	**506974**
A223	**506036**
A275	**506602**
A280	**506488**
A280	**506920**
A300	**506808**
A330	**506692**
A341ST	**506589**
B114	**506304**
B120	**506879**
B202	**506069**
B203	**506070**
B204	**506249**
B206	**506141**
B207	**506052**
B210	**506278**
B211	**506266**
B212	**506169**

DOLZ (.../...)

B213	**506046**
B214	**506107**
B215	**506110**
B216	**506109**
B219	**506289**
B220	**506662**
B222	**506663**
B223	**506664**
B224 /B221	**506710**
B225	**506919**
B226	**506711**
B317	**506445**
B318	**506521**
B319	**506631**
B320	**506646**
B323	**506862**
C110	**506035**
C111	**506290**
C112	**506291**
C113	**506595**
C114	**506704**
C115	**506178**
C117	**506117**
C118	**506530**
C119	**506574**
C120	**506575**
C121	**506643**
C122	**506714**
C127	**506719**
C128	**506538**
C129	**506715**
C130	**506582**
C131	**506596**
C134	**506721**
C136	**506914**
C137	**506952**
C138	**506918**
C139	**506988**
D210	**506647**
D211	**506649**
D213	**506648**
D214	**506659**
D215	**506953**
D216	**506954**
F105	**506001**
F107	**506000**
F111	**506009**
F112	**506858**
F114	**506155**
F115	**506165**
F116	**506173**
F120	**506158**
F125	**506284**
F126	**506283**
F127	**506008**
F129	**506642**
F130	**506300**
F131	**506047**
F132	**506548**
F133	**506472**
F137	**506012**
F138	**506536**
F139	**506581**
F140	**506732**
F141	**506604**
F147	**506127**
F148	**506789**
F149	**506693**
F150	**506694**
F155	**506301**
F165	**506529**
F166	**506287**
F196	**506527**

DOLZ (.../...)

F197	**506528**
F198	**506133**
F199	**506040**
F200	**506526**
F201	**506641**
F203	**506809**
F204	**506955**
F205	**506898**
F233	**506893**
H108	**506081**
H110	**506033**
H118	**506028**
H119	**506425**
H122	**506322**
H125	**506943**
H127	**506443**
H129	**506661**
H132	**506540**
H200	**506406**
H201	**506617**
H202	**506777**
H204/H203	**506818**
H205	**506407**
H206	**506778**
H207	**506408**
H208	**506734**
H209	**506405**
H212	**506736**
H213	**506788**
H214	**506857**
H215	**506814**
H216	**506956**
H219	**506958**
H221	**506813**
H222	**506922**
H223	**506976**
H226	**506977**
I170	**506864**
I275	**506961**
J201	**506456**
J202	**506446**
J204	**506803**
K101	**506826**
K106	**506935**
L115	**506827**
L116	**506323**
L120	**506148**
L121	**506151**
L135	**506859**
L144ST	**506722**
L155	**506123**
L165	**506296**
M136/M131	**506010**
M137	**506016**
M138	**506004**
M139	**506025**
M142	**506018**
M143	**506114**
M144	**506045**
M145	**506320**
M146	**506321**
M150	**506413**
M152	**506424**
M156	**506400**
M172	**506095**
M175	**506078**
M176	**506060**
M179	**506639**
M186	**506097**
M188	**506343**
M193	**506100**
M194	**506380**
M195	**506061**

IAM	Valeo
DOLZ (.../...)	
M196	**506619**
M199	**506058**
M200	**506306**
M201	**506444**
M202	**506660**
M205	**506307**
M206	**506547**
M209	**506305**
M209	**506535**
M210	**506628**
M211	**506832**
M212	**506787**
M213	**506593**
M214	**506831**
M215	**506833**
M219	**506676**
M220	**506675**
M221	**506875**
M222	**506865**
M224	**506930**
M225	**506882**
M227	**506962**
M229	**506964**
M230	**506987**
M231	**506980**
M232	**506926**
M233	**526005**
M237	**506899**
M243	**506696**
M276	**506671**
M304	**506842**
M460	**506399**
M463	**506880**
M470	**506973**
N100	**506023**
N101	**506429**
N102	**506091**
N103	**506416**
N106	**506377**
N108	**506037**
N110	**506438**
N111	**506437**
N113	**506436**
N114	**506717**
N115	**506622**
N120	**506357**
N121	**506779**
N123	**506394**
N128	**506737**
N130	**506534**
N141	**506731**
N143	**506733**
N144	**506782**
N147	**506868**
N149	**506702**
N150	**506965**
N154	**506927**
N206	**506014**
N207	**526006**
N209	**506983**
N305	**506108**
N405	**506029**
N406	**506531**
N504	**506245**
N504D	**506247**
N505	**506122**
N505D	**506230**
N566	**506259**
N568	**506292**
N575	**506088**
N585	**506170**
O100	**506048**
O104	**506031**

IAM	Valeo
DOLZ (.../...)	
O105	**506006**
O106	**506007**
O107	**506003**
O109	**506089**
O115	**506728**
O116	**506030**
O117	**506005**
O118	**506087**
O119	**506084**
O123	**506839**
O128	**506080**
O129	**506085**
O133	**506483**
O136	**506308**
O137	**506310**
O138	**506309**
O139	**506856**
O142	**506697**
O143	**506481**
O146	**506703**
O150	**506785**
O160	**506656**
O181	**506657**
O260	**506601**
O261	**506838**
O263	**506837**
O264	**506866**
P318	**506360**
R121	**506341**
R122	**506073**
R124	**506099**
R125	**506074**
R129	**506022**
R130	**506337**
R131	**506072**
R132	**506330**
R133	**506086**
R137	**506317**
R139	**506347**
R140	**506297**
R141	**506345**
R142	**506041**
R144	**506367**
R144ST	**506620**
R145	**506059**
R145A	**506328**
R147	**506599**
R159	**506486**
R161	**506043**
R163	**506473**
R164	**506314**
R165	**506315**
R167	**506316**
R178	**506076**
R179	**506019**
R193	**506026**
R196	**506044**
R197	**506050**
R199	**506325**
R210	**506579**
R211	**506637**
R214	**506564**
R215	**506580**
R217	**506674**
R218	**506780**
R219	**506698**
R220	**506783**
R221	**506784**
R222	**506869**
R225	**506729**
R228	**506968**
R229	**506725**
R231	**506993**

IAM	Valeo
DOLZ (.../...)	
R232	**526010**
R234	**526001**
R266	**506311**
R301	**506835**
R302	**506853**
R304	**506854**
S103	**506079**
S108FL	**506352**
S110	**506492**
S123	**506860**
S124	**506119**
S124ST	**506386**
S125	**506268**
S129	**506075**
S135	**506092**
S136	**506572**
S137	**506645**
S138	**506508**
S141	**506134**
S143	**506331**
S144	**506327**
S148	**506063**
S151	**506106**
S152	**506248**
S153	**506256**
S154	**506383**
S155	**506167**
S160	**506295**
S161	**506397**
S165	**506561**
S166	**506115**
S168	**506474**
S169	**506514**
S172	**506144**
S181	**506559**
S181ST	**506723**
S182	**506562**
S182	**506695**
S184	**506293**
S188	**506340**
S189	**506335**
S192	**506634**
S193	**506522**
S194	**506672**
S199	**506294**
S200	**506923**
S201	**506614**
S203	**506568**
S205	**506440**
S207	**506904**
S210	**506518**
S212	**506516**
S213	**506525**
S216	**506523**
S217	**506334**
S217	**506379**
S218	**506299**
S219	**506598**
S220	**506584**
S221	**506586**
S222	**506585**
S223	**506298**
S224	**506670**
S225	**506669**
S226	**506613**
S226T	**506524**
S227	**506563**
S230	**506560**
S232	**506786**
S234	**506712**
S237	**506519**
S242	**506975**
S261	**506640**

IAM	Valeo
DOLZ (.../...)	
S292	**506730**
S319	**506686**
S320	**506967**
T116	**506032**
T136	**506011**
T184	**506652**
T186	**506846**
T193	**506691**
T205	**506848**
T212	**506433**
T214	**506426**
T219	**506707**
T220	**506881**
T221	**506610**
T225	**506843**
T226	**506852**
T227	**506907**
T228	**506849**
T229	**506851**
T230	**506844**
T231	**506905**
T235	**506982**
T242	**506942**
FACET	
73000	**700002**
73005	**700005**
73007	**700001**
73080	**700043**
73082	**700004**
73084	**700041**
73086	**700036**
73094	**700009**
73094	**700033**
73095	**700007**
73098	**700018**
73100	**700039**
73101	**700011**
73110	**700037**
73113	**700000**
73114	**700014**
73124	**700034**
73125	**700044**
73128	**700019**
73129	**700020**
73132	**700002**
73136	**700046**
73140	**700050**
73143	**700021**
73143	**700038**
73146	**700012**
73147	**700022**
73148	**700015**
73150	**700008**
73160	**700010**
73165	**700059**
73170	**700005**
73171	**700038**
73172	**700013**
73182	**700008**
73191	**700016**
73192	**700023**
73204	**700017**
73220	**700024**
73232	**700025**
73234	**700026**
73236	**700042**
73239	**700028**
73279	**700055**
73284	**700061**
73291	**700054**
73292	**700055**

IAM ⇨ Valeo	
FACET (.../...)	
73308	**700056**
73510	**700060**
73550	**700057**
73555	**820032**
74071	**820235**
74087	**819760**
74107	**820829**
74112	**819743**
75000	**819759**
75000	**819760**
75001	**819762**
75004	**819758**
75005	**819759**
75006	**819764**
75007	**819744**
75007	**819757**
75008	**819749**
75011	**819767**
75013	**819746**
75013	**819769**
75014	**819825**
75016	**819744**
75017	**819757**
75019	**819746**
75020	**819755**
75020	**819760**
75020	**819761**
75027	**819743**
75029	**820333**
75031	**819774**
75031	**820315**
75032	**820304**
75033	**819760**
75036	**820238**
75049	**820202**
75050	**820330**
75054	**820233**
75064	**820205**
75069	**820235**
75070	**820237**
75071	**820236**
75086	**820332**
75090	**820325**
75092	**820240**
75093	**820832**
75095	**820331**
75095	**820338**
75100	**820233**
75101	**819826**
75102	**820242**
75103	**819774**
75106	**820206**
75109	**820301**
75110	**820337**
75111	**819760**
75111	**819761**
75112	**820233**
75117	**819830**
75122	**819751**
75122	**819752**
75127	**819782**
75128	**819745**
75128	**819783**
75129	**819784**
75130	**819786**
75131	**819829**
75134	**819759**
75136	**820212**
75137	**819785**
75145	**819752**
75145	**819753**
75147	**820038**
75152	**819748**

IAM ⇨ Valeo	
FACET (.../...)	
75156	**820326**
75165	**820210**
75166	**819784**
75166	**820211**
75169	**820207**
75173	**820301**
75179	**820335**
75182	**820828**
75186	**820329**
75187	**819773**
75187	**819774**
75196	**820334**
75197	**820034**
75198	**820338**
75200	**819756**
75201	**819753**
75230	**820242**
75241	**819830**
75246	**820336**
75262	**820302**
75601	**819828**
75602	**819775**
75604	**819772**
75605	**819769**
75606	**819770**
75610	**820315**
75611	**820232**
75612	**819773**
75613	**819771**
75615	**820324**
75618	**819781**
75622	**819827**
75624	**820214**
75626	**820229**
75627	**820208**
75628	**820033**
75629	**819747**
75629	**819755**
75630	**819754**
75631	**819747**
75632	**820036**
75633	**820307**
75635	**819769**
75636	**820222**
75639	**820037**
75642	**819827**
75643	**820031**
75644	**820219**
75645	**820308**
75647	**820032**
75648	**820312**
75649	**820311**
75650	**820225**
75651	**820224**
75652	**820035**
75653	**820030**
75654	**820303**
75656	**819781**
75658	**820215**
75668	**820227**
75672	**820309**
75673	**820310**
75674	**820241**
75675	**820032**
75681	**820031**
75688	**820037**
75689	**820036**
75690	**820831**
75692	**820305**
78061	**820791**
78062	**819913**
78095	**820462**
78096	**820067**

IAM ⇨ Valeo	
FACET (.../...)	
78097	**820538**
78098	**820464**
78099	**820460**
78100	**820459**
78101	**820465**
78102	**820463**
78104	**820797**
78105	**820162**
78106	**819959**
78107	**819958**
78109	**820163**
78110	**820444**
78111	**820160**
78112	**820539**
78113	**820452**
78114	**820447**
78115	**820454**
78116	**820446**
78118	**820402**
78119	**820401**
78121	**820448**
78122	**820402**
78124	**819938**
78125	**819963**
78126	**819963**
78127	**820472**
78128	**820453**
78141	**820158**
78142	**820156**
78143	**820157**
78144	**819964**
78145	**820159**
78146	**820407**
78148	**820501**
78149	**820449**
78150	**820978**
78152	**820066**
78153	**820403**
78154	**820466**
78155	**820433**
78156	**820446**
78157	**820504**
78158	**820451**
78159	**820433**
78160	**820150**
78163	**819960**
78170	**820410**
78174	**820593**
78175	**820155**
78176	**820457**
78177	**820179**
78178	**820179**
78179	**820468**
78180	**820467**
78181	**820411**
78187	**819938**
78188	**820071**
78189	**820412**
78190	**820518**
78191	**820434**
78192	**820138**
78193	**820156**
78194	**820139**
78195	**820070**
78196	**819968**
78196	**820050**
78197	**820050**
78198	**820185**
78199	**820500**
78201	**819882**
78201S	**819882**
78202S	**819846**
78202S	**819967**

IAM ⇨ Valeo	
FACET (.../...)	
78202S	**820049**
78202S	**820488**
78204S	**820290**
78205	**820597**
78205S	**820597**
78207	**819935**
78207S	**819854**
78207S	**819935**
78207S	**820594**
78208S	**819899**
78209	**819900**
78209S	**819900**
78211	**819933**
78213	**819848**
78213S	**819848**
78215S	**819889**
78216S	**819864**
78216S	**820178**
78217	**819884**
78217	**820771**
78218	**819896**
78218S	**819864**
78218S	**819882**
78218S	**819896**
78218S	**820176**
78218S	**820476**
78219	**819883**
78220	**819883**
78220	**820074**
78221	**819867**
78221S	**819867**
78222	**820173**
78222S	**820173**
78223S	**819868**
78223S	**820148**
78223S	**820168**
78224	**820152**
78224S	**820152**
78226	**819922**
78227S	**820042**
78228	**819942**
78228	**819943**
78229	**819942**
78229S	**820990**
78232	**819943**
78232	**820767**
78232S	**820963**
78233S	**819966**
78235S	**819846**
78235S	**819967**
78237	**820963**
78238	**820174**
78238S	**820174**
78239	**820008**
78239S	**819862**
78239S	**820008**
78240	**819946**
78240S	**819946**
78242	**820174**
78243	**820545**
78244	**820990**
78245	**819855**
78245	**819876**
78246	**819923**
78246	**819924**
78247	**819923**
78248	**820481**
78248S	**820481**
78249	**819859**
78250	**819839**
78250	**819937**
78250S	**819839**
78250S	**819937**

IAM ⇨ Valeo	
FACET (.../...)	
78250S	**819952**
78251	**819885**
78251S	**819885**
78252	**819856**
78253	**819878**
78255S	**819891**
78256	**820063**
78256S	**820063**
78259	**820064**
78259	**820065**
78259S	**820064**
78259S	**820065**
78261	**819839**
78262	**819840**
78262	**819841**
78262S	**819840**
78265	**819882**
78266S	**820544**
78267	**820076**
78267	**820165**
78267	**820195**
78268	**819915**
78268	**820171**
78268S	**819851**
78268S	**820058**
78268S	**820171**
78269	**820174**
78271	**819969**
78272	**820191**
78273S	**819966**
78273S	**820057**
78275	**819877**
78276S	**819864**
78276S	**819865**
78276S	**819945**
78276S	**820176**
78276S	**820476**
78278	**819868**
78279	**819869**
78280	**819970**
78284	**819867**
78287	**820141**
78288	**820502**
78289	**820176**
78289S	**819945**
78291	**819862**
78293	**819946**
78295	**819935**
78296	**819848**
78297	**820008**
78299	**820027**
78299	**820432**
78300	**819934**
78300S	**819934**
78301	**820064**
78301S	**820064**
78304	**820471**
78304S	**820471**
78305	**820506**
78305S	**820506**
78306	**820506**
78307	**819926**
78307S	**820040**
78308	**820430**
78311	**819953**
78312	**820056**
78314	**820432**
78315	**820170**
78317	**820440**
78319	**820510**
78319S	**819911**
78319S	**819945**
78319S	**820510**

IAM ⇨ Valeo	
FACET (.../...)	
78320	**820515**
78320S	**820515**
78321	**820515**
78321S	**820515**
78322	**820025**
78322S	**820025**
78323	**819950**
78323	**819955**
78323	**820047**
78323S	**819950**
78324	**820073**
78327	**820009**
78327S	**820009**
78328	**820023**
78329	**819966**
78330	**820048**
78331	**819942**
78331	**820044**
78333	**820059**
78337	**819966**
78337S	**819966**
78337S	**820486**
78338	**819842**
78338	**820438**
78339	**820136**
78339S	**820512**
78340S	**820044**
78342	**820151**
78343	**820507**
78347	**820503**
78348	**820592**
78349	**820149**
78350	**820502**
78351	**820140**
78352	**820437**
78353	**820258**
78354	**819943**
78354S	**819943**
78354S	**820544**
78355	**820439**
78355S	**819875**
78355S	**820068**
78355S	**820439**
78356	**820439**
78357	**820439**
78360	**820516**
78360S	**820173**
78360S	**820516**
78363	**820442**
78363S	**820442**
78364	**820172**
78364S	**820172**
78365	**820514**
78365S	**820514**
78366	**820042**
78367	**819942**
78368	**819842**
78368	**820438**
78369	**820042**
78370	**820513**
78370S	**820513**
78371	**820193**
78371S	**819864**
78371S	**819865**
78371S	**820177**
78371S	**820193**
78372	**820193**
78373	**820933**
78374	**820262**
78374S	**819935**
78374S	**820262**
78375	**820053**
78375S	**820053**

IAM ⇨ Valeo	
FACET (.../...)	
78376	**819854**
78376S	**819854**
78377	**819952**
78377	**820010**
78377S	**819952**
78378	**820072**
78378S	**819846**
78378S	**820072**
78379	**820513**
78380	**820245**
78380S	**820245**
78384	**819943**
78385	**819873**
78386	**819882**
78387	**819944**
78389	**819897**
78389S	**819897**
78389S	**820021**
78390	**820042**
78391	**820443**
78391S	**820442**
78391S	**820443**
78392	**820443**
78393	**820443**
78394	**820475**
78394S	**820051**
78394S	**820475**
78395	**820051**
78395S	**820051**
78396	**820547**
78396S	**820547**
78398	**820552**
78399S	**820512**
78400S	**819846**
78400S	**820181**
78401	**820414**
78401S	**820414**
78402	**820435**
78403	**820135**
78403	**820194**
78403S	**820194**
78404	**820136**
78404	**820512**
78405	**820562**
78407S	**820533**
78408	**820519**
78408	**820533**
78409	**820042**
78409	**820438**
78410	**820027**
78410S	**820027**
78411	**820796**
78412	**820542**
78414	**820481**
78415	**820510**
78415S	**820510**
78417	**820513**
78418S	**820178**
78418S	**820524**
78419S	**820178**
78420	**820962**
78420S	**820962**
78423	**820431**
78432	**820168**
78434	**820168**
78435	**820168**
78437	**819942**
78441	**820442**
78443	**820512**
78444	**820512**
78446	**819943**
78447	**819864**
78448	**819966**

IAM ⇨ Valeo	
FACET (.../...)	
78449	**819864**
78450	**819966**
78451	**819967**
78453	**819864**
78455	**819967**
78459	**820176**
78459S	**820176**
78460	**820176**
78461	**819927**
78461S	**819927**
78462S	**820176**
78462S	**820181**
78463	**820942**
78463S	**820942**
78465	**820541**
78465S	**820541**
78466	**819945**
78468	**820181**
78468S	**820181**
78469	**820587**
78470	**819853**
78470S	**819853**
78470S	**819854**
78480	**820134**
78480S	**820134**
78483	**820475**
78484	**819967**
78485	**819967**
78487	**820068**
78489	**820549**
78490	**819956**
78491	**820196**
78493	**820933**
78494	**820514**
78495	**820837**
78496	**820196**
78500S	**819896**
78502S	**819930**
78503	**820165**
78504	**820527**
78505	**820556**
78506	**820536**
78510	**820131**
78513	**819942**
78514	**820767**
78515S	**819847**
78516	**820496**
78517	**820438**
78519	**820042**
78521	**820942**
78522	**820512**
78526	**820010**
78534	**820072**
78536S	**820137**
78537	**820487**
78539S	**819936**
78540S	**819905**
78542	**820526**
78543	**820025**
78544S	**820958**
78545S	**819864**
78546S	**819898**
78547S	**820058**
78549	**820494**
78550S	**819929**
78551S	**819863**
78552	**820063**
78553	**820519**
78563	**820562**
78564	**820926**
78565	**820561**
78569	**820578**
78570	**820149**

FACET (.../...)

78571	820562
78572	820577
78575	820534
78580	820563
78583	820586
78585	820562
78586	820072
78586	820191
78587	820072
78612S	820132
78628	819921
78629S	819951
78631S	819838
78634	819879

FIRST LINE

FWP1103	506861
FWP1105	506013
FWP1106	506066
FWP1110	506186
FWP1112	506105
FWP1113	506666
FWP1113	506667
FWP1114	506428
FWP1134	506256
FWP1135	506008
FWP1143	506052
FWP1145	506141
FWP1146	506070
FWP1159	506011
FWP1160	506178
FWP1181	506134
FWP1183	506474
FWP1186	506167
FWP1196	506028
FWP1199	506001
FWP1201	506000
FWP1213	506033
FWP1217	506148
FWP1221	506413
FWP1223	506424
FWP1225	506100
FWP1227	506097
FWP1229	506639
FWP1231	506078
FWP1232	506060
FWP1235	506058
FWP1239	506619
FWP1240	506343
FWP1241	506057
FWP1242	506061
FWP1245	506404
FWP1246	506406
FWP1252	506023
FWP1255	506048
FWP1258	506006
FWP1261	506003
FWP1264	506007
FWP1267	506030
FWP1268	506108
FWP1270	506032
FWP1276	506230
FWP1277	506014
FWP1282	506059
FWP1282	506473
FWP1283	506337
FWP1293	506073
FWP1294	506074
FWP1297	506040
FWP1304	506087
FWP1316	506076
FWP1325	506005

FIRST LINE (.../...)

FWP1335	506026
FWP1341	506043
FWP1343	506044
FWP1346	506050
FWP1348	506089
FWP1349	506425
FWP1350	506158
FWP1353	506106
FWP1356	506122
FWP1357	506858
FWP1358	506009
FWP1377	506624
FWP1385	506610
FWP1396	506259
FWP1399	506508
FWP1402	506560
FWP1403	506169
FWP1407	506132
FWP1408	506559
FWP1410	506086
FWP1411	506080
FWP1414	506155
FWP1426	506540
FWP1432	506416
FWP1434	506429
FWP1435	506037
FWP1436	506487
FWP1437	506870
FWP1437	506923
FWP1444	506938
FWP1450	506426
FWP1451	506939
FWP1452	506881
FWP1461	506292
FWP1463	506434
FWP1463	506713
FWP1464	506012
FWP1467	506084
FWP1469	506133
FWP1474	506115
FWP1475	506085
FWP1476	506029
FWP1477	506046
FWP1478	506436
FWP1479	506880
FWP1480	506400
FWP1486	506045
FWP1491	506018
FWP1497	506110
FWP1498	506109
FWP1499	506107
FWP1501	506860
FWP1502	506444
FWP1505	506117
FWP1507	506047
FWP1510	506127
FWP1512	506388
FWP1513	506130
FWP1513	506488
FWP1517	506614
FWP1523	506836
FWP1525	506622
FWP1526	506782
FWP1528	506438
FWP1535	506281
FWP1535	506673
FWP1541	506170
FWP1543	506282
FWP1545	506286
FWP1547	506479
FWP1548	506562
FWP1550	506380
FWP1551	506340

FIRST LINE (.../...)

FWP1554	506442
FWP1554	506792
FWP1557	506291
FWP1560	506642
FWP1561	506153
FWP1564	506240
FWP1574	506308
FWP1576	506310
FWP1579	506283
FWP1580	506287
FWP1582	506846
FWP1583	506299
FWP1585	506408
FWP1586	506323
FWP1587	506317
FWP1589	506300
FWP1590	506334
FWP1590	506379
FWP1598	506443
FWP1599	506322
FWP1603	506321
FWP1604	506441
FWP1604	506679
FWP1605	506248
FWP1613	506633
FWP1623	506733
FWP1626	506737
FWP1634	506440
FWP1637	506439
FWP1644	506625
FWP1645	506652
FWP1645	506942
FWP1648	506847
FWP1651	506278
FWP1656	506336
FWP1658	506306
FWP1659	506305
FWP1659	506535
FWP1659	506964
FWP1661	506290
FWP1665	506445
FWP1668	506311
FWP1669	506307
FWP1675	506538
FWP1676	506456
FWP1677	506446
FWP1693	506691
FWP1694	506627
FWP1702	506304
FWP1706	506314
FWP1710	506920
FWP1713	506472
FWP1714	506603
FWP1716	506513
FWP1717	506936
FWP1720	506385
FWP1721	506634
FWP1724	506523
FWP1726	506516
FWP1728	506563
FWP1729	506518
FWP1732	506661
FWP1735	506483
FWP1736	506301
FWP1738	506579
FWP1739	506637
FWP1741	506582
FWP1742	506596
FWP1747	506649
FWP1748	506647
FWP1750	506533
FWP1751	506581
FWP1754	506657

FIRST LINE (.../...)

FWP1755	506530
FWP1756	506580
FWP1758	506574
FWP1759	506575
FWP1760	506576
FWP1761	506577
FWP1762	506578
FWP1766	506586
FWP1769	506589
FWP1769	506692
FWP1770	506590
FWP1771	506591
FWP1774	506660
FWP1776	506787
FWP1777	506526
FWP1777	506643
FWP1778	506655
FWP1780	506829
FWP1781	506592
FWP1782	506593
FWP1784	506597
FWP1785	506598
FWP1787	506601
FWP1788	506602
FWP1789	506604
FWP1790	506641
FWP1792	506531
FWP1793	506548
FWP1794	506853
FWP1795	506534
FWP1797	506732
FWP1803	506830
FWP1805	506532
FWP1806	506521
FWP1807	506631
FWP1808	506695
FWP1809	506656
FWP1816	506295
FWP1817	506599
FWP1817	506600
FWP1819	506669
FWP1819	506670
FWP1822	506645
FWP1828	506671
FWP1829	506676
FWP1830	506646
FWP1831	506786
FWP1841	506347
FWP1846	506640
FWP1847	506828
FWP1849	506869
FWP1851	506651
FWP1853	506818
FWP1854	506680
FWP1854	506943
FWP1856	506650
FWP1864	506525
FWP1865	506777
FWP1867	506659
FWP1873	506367
FWP1873	506620
FWP1876	506524
FWP1876	506613
FWP1919	506903
FWP1926	506632
FWP1931	506813
FWP1933	506871
FWP1934	506700
FWP1934	506873
FWP1936	506842
FWP1941	506874
FWP1942	506788
FWP1946	506698

FIRST LINE (.../...)

IAM	Valeo
FWP1947	506697
FWP1949	506714
FWP1951	506694
FWP1952	506298
FWP1952	506712
FWP1961	506672
FWP1962	506481
FWP1964	506784
FWP1967	506397
FWP1969	506710
FWP1975	506862
FWP1977	506686
FWP1979	506839
FWP1981	506882
FWP1984	506707
FWP1986	506848
FWP1987	506948
FWP1989	506719
FWP1990	506704
FWP1992	506663
FWP1993	506711
FWP1995	506734
FWP1996	506706
FWP1997	506844
FWP1998	506794
FWP2003	506953
FWP2006	506894
FWP2009	506816
FWP2013	506908
FWP2014	506904
FWP2019	506470
FWP2021	506857
FWP2023	506928
FWP2024	506730
FWP2025	506854
FWP2026	506674
FWP2026	506725
FWP2027	506808
FWP2029	506790
FWP2030	506781
FWP2031	506855
FWP2033	506728
FWP2034	506789
FWP2035	506907
FWP2036	506454
FWP2039	506843
FWP2040	506618
FWP2042	506906
FWP2043	506715
FWP2048	506675
FWP2049	506702
FWP2051	506865
FWP2052	506930
FWP2053	506831
FWP2054	506819
FWP2055	506703
FWP2058	506810
FWP2062	506833
FWP2063	506693
FWP2064	506325
FWP2065	506678
FWP2066	506605
FWP2067	506717
FWP2068	506872
FWP2069	506699
FWP2070	506701
FWP2071	506696
FWP2076	506785
FWP2077	506875
FWP2078	506838
FWP2079	506809
FWP2080	506851
FWP2083	506721

FIRST LINE (.../...)

IAM	Valeo
FWP2084	506925
FWP2085	506919
FWP2087	506898
FWP2088	506864
FWP2089	506835
FWP2090	506837
FWP2093	506817
FWP2094	506815
FWP2096	506867
FWP2097	506664
FWP2098	506662
FWP2099	506934
FWP2103	506958
FWP2109	506900
FWP2110	506877
FWP2111	506911
FWP2113	506798
FWP2115	506852
FWP2117	506812
FWP2119	506826
FWP2121	506823
FWP2122	506736
FWP2125	506720
FWP2125	506918
FWP2126	506899
FWP2128	506868
FWP2129	506916
FWP2132	506863
FWP2134	506876
FWP2136	506726
FWP2137	506866
FWP2140	506821
FWP2143	506926
FWP2149	506564
FWP2150	506309
FWP2150	506856
FWP2151	506878
FWP2152	506893
FWP2153	506927
FWP2156	506962
FWP2159	506849
FWP2160	506946
FWP2162	506973
FWP2166	506795
FWP2167	506608
FWP2169	506935
FWP2172	506976
FWP2175	506922
FWP2178	506902
FWP2179	506897
FWP2180	506905
FWP2181	506800
FWP2183	506967
FWP2184	506980
FWP2185	506987
FWP2195	506914
FWP2196	506820
FWP2205	506952
FWP2207	506955
FWP2210	526005
FWP2211	506895
FWP2212	506961
FWP2216	506978
FWP2220	506950
FWP2221	506954
FWP2233	506977
FWP2253	526010
FWP2254	506832
FWP2255	506993
FWP2266	506968

GATES

WP0005	506590

GATES (.../...)

IAM	Valeo
WP0006	506007
WP0008	506240
WP0009	506105
WP0010	506397
WP0011	506035
WP0013	506117
WP0014	506575
WP0015	506282
WP0017	506385
WP0020	506190
WP0021	506006
WP0022	506030
WP0024	506132
WP0025	506099
WP0027	506014
WP0030	506577
WP0037	506704
WP0039	506714
WP0043	506871
WP0047	506287
WP0049	506573
WP0051	506291
WP0058	506659
WP0060	506013
WP0061	506005
WP0065	526001
WP0069	506967
WP0070	506856
WP0073	506851
WP0080	506918
WP0082	506849
WP0085	506530
Z80345	506003
Z80348	506087

GRAF

PA003	506956
PA009	506900
PA010	506877
PA012	506958
PA020	506852
PA055	506826
PA062	506895
PA067	506952
PA081	506041
PA088	506079
PA095	506108
PA1001	506905
PA1002	506935
PA1006	506926
PA1007	506817
PA101	506036
PA1013	506878
PA1017	506904
PA1019	506325
PA1021	506897
PA1023	506976
PA1024	506819
PA1026	506961
PA1027	506964
PA1028	526005
PA103	506190
PA1030	506967
PA1035	506573
PA1036	506903
PA1037	506902
PA1041	506798
PA1046	506711
PA1048	506988
PA1049	506978
PA105	506100
PA1051	506950

GRAF (.../...)

IAM	Valeo
PA1053	506663
PA1054	506664
PA1063	506922
PA1066	506927
PA1070	506916
PA108	506031
PA1082	526006
PA1083	506716
PA1083	506983
PA1085	506808
PA1088	506977
PA1089	506974
PA1091	506993
PA1095	526010
PA1097	526001
PA1134	506982
PA114	506026
PA1144	506618
PA119	506097
PA121	506346
PA130	506173
PA131	506009
PA140	506337
PA142	506059
PA143	506825
PA146	506066
PA148	506013
PA149	506069
PA153	506001
PA156	506230
PA161	506248
PA162	506352
PA163	506098
PA178	506106
PA187	506010
PA189	506247
PA190	506245
PA197	506032
PA201	506091
PA202	506377
PA208	506413
PA230	506860
PA232	506000
PA233	506186
PA234	506048
PA235	506003
PA240/PA315	506178
PA243	506141
PA244	506089
PA245	506328
PA247	506076
PA252	506122
PA256	506011
PA264	506052
PA269	506383
PA270	506278
PA278	506165
PA282	506043
PA284	506040
PA285/PA585	506572
PA286A	506397
PA293	506134
PA297	506170
PA301	506330
PA303	506088
PA304	506256
PA308	506274
PA312	506044
PA314	506050
PA319	506428
PA320	506713
PA321	506008
PA322	506158

GRAF (.../...)

PA323	**506155**
PA324	**506087**
PA325	**506005**
PA326	**506084**
PA338A	**506562**
PA340	**506144**
PA344	**506434**
PA345	**506102**
PA346	**506101**
PA348	**506029**
PA351	**506410**
PA352	**506412**
PA353	**506473**
PA354	**506268**
PA365	**506560**
PA366	**506119**
PA366	**506386**
PA369	**506169**
PA370	**506266**
PA372	**506115**
PA374	**506004**
PA375	**506016**
PA377	**506095**
PA378A	**506561**
PA379	**506070**
PA380	**506249**
PA383	**506132**
PA385	**506028**
PA390	**506046**
PA391	**506117**
PA393	**506014**
PA394	**506075**
PA395	**506340**
PA397	**506859**
PA399	**506123**
PA401	**506012**
PA404	**506151**
PA406	**506343**
PA409	**506080**
PA410	**506085**
PA412	**506099**
PA413	**506133**
PA414A	**506057**
PA415	**506482**
PA418	**506167**
PA420A	**506281**
PA420A	**506673**
PA422	**506105**
PA422	**506130**
PA423	**506240**
PA424	**506388**
PA425	**506282**
PA426	**506018**
PA427	**506114**
PA427	**506696**
PA428	**506045**
PA429A	**506047**
PA430	**506109**
PA431	**506110**
PA432A	**506107**
PA434	**506023**
PA435	**506037**
PA437A	**506399**
PA439	**506401**
PA440	**506127**
PA441	**506006**
PA442	**506007**
PA443	**506030**
PA444	**506293**
PA446	**506078**
PA447	**506619**
PA448	**506060**
PA449 / PA735	**506061**

GRAF (.../...)

PA450	**506380**
PA451	**506294**
PA452	**506295**
PA454	**506474**
PA479	**506938**
PA486	**506468**
PA491	**506290**
PA492	**506479**
PA493A	**506438**
PA494	**506286**
PA495	**506639**
PA496	**506335**
PA497	**506296**
PA498	**506302**
PA501	**506284**
PA502A	**506289**
PA503	**506297**
PA508	**506437**
PA509	**506283**
PA513	**506345**
PA514	**506311**
PA517	**506858**
PA519A	**506440**
PA527	**506074**
PA529	**506312**
PA530	**506620**
PA531	**506019**
PA532	**506314**
PA533	**506315**
PA534	**506316**
PA535	**506411**
PA536	**506317**
PA537	**506368**
PA538	**506436**
PA539	**506394**
PA540	**506429**
PA541	**506308**
PA541A	**506703**
PA542	**506291**
PA543	**506072**
PA544	**506292**
PA546	**506227**
PA547	**506341**
PA549	**506033**
PA550	**506022**
PA550	**506347**
PA551	**506424**
PA552	**506334**
PA552	**506379**
PA553	**506298**
PA554	**506092**
PA555	**506390**
PA556	**506391**
PA557	**506861**
PA559	**506063**
PA562	**506320**
PA564	**506322**
PA565	**506323**
PA567	**506058**
PA568	**506189**
PA570	**506445**
PA571	**506153**
PA572	**506309**
PA572A	**506856**
PA573	**506073**
PA574	**506086**
PA575	**506148**
PA577	**506310**
PA578	**506444**
PA579	**506667**
PA580	**506305**
PA582	**506306**
PA583	**506307**

GRAF (.../...)

PA585	**506143**
PA588	**506300**
PA589A	**506301**
PA590	**506287**
PA591	**506336**
PA592	**506442**
PA594	**506367**
PA596	**506508**
PA597	**506486**
PA599	**506299**
PA602	**506487**
PA603	**506385**
PA604	**506631**
PA607	**506514**
PA608	**506628**
PA609	**506513**
PA610	**506547**
PA611	**506622**
PA612	**506472**
PA613	**506632**
PA615/PA672	**506590**
PA616	**506516**
PA617	**506484**
PA618A	**506517**
PA619	**506522**
PA621	**506518**
PA622	**506563**
PA623	**506519**
PA625	**506521**
PA626	**506613**
PA627	**506579**
PA628	**506035**
PA629	**506523**
PA630/PA626	**506524**
PA631	**506525**
PA632	**506580**
PA632	**506729**
PA633	**506564**
PA635	**506357**
PA636	**506526**
PA637	**506527**
PA638	**506528**
PA639	**506581**
PA640	**506529**
PA641	**506530**
PA642	**506531**
PA643	**506582**
PA645	**506584**
PA646	**506585**
PA647	**506586**
PA650	**506732**
PA653	**506643**
PA654	**506578**
PA657	**506644**
PA658	**506587**
PA659	**506722**
PA660	**506534**
PA661	**506535**
PA663	**506634**
PA664	**506481**
PA665 /PA728	**506483**
PA666	**506588**
PA667	**506559**
PA668	**506679**
PA669	**506661**
PA670	**506680**
PA671	**506589**
PA671	**506692**
PA674	**506576**
PA676	**506577**
PA677	**506592**
PA678	**506593**
PA679	**506594**

GRAF (.../...)

PA683	**506595**
PA684	**506596**
PA685	**506669**
PA686	**506670**
PA687	**506660**
PA688	**506538**
PA689	**506645**
PA690	**506597**
PA691	**506672**
PA692	**506646**
PA693	**506598**
PA694	**506647**
PA695	**506648**
PA696	**506649**
PA697	**506406**
PA698	**506818**
PA700	**506778**
PA701	**506736**
PA702	**506617**
PA703	**506737**
PA706	**506671**
PA708	**506650**
PA709	**506651**
PA710	**506787**
PA711	**506832**
PA712	**506942**
PA713	**506652**
PA715	**506624**
PA716	**506433**
PA718	**506610**
PA719/PA1047	**506653**
PA721	**506599**
PA722	**506600**
PA723	**506637**
PA724A	**506655**
PA726	**506614**
PA727	**506656**
PA729	**506601**
PA730	**506657**
PA731	**506533**
PA732	**506835**
PA733	**506695**
PA736	**506678**
PA738	**506659**
PA739	**506640**
PA741	**506604**
PA742	**506641**
PA746	**506675**
PA747	**506575**
PA750	**506783**
PA751	**506784**
PA752	**506676**
PA757	**506602**
PA758	**506488**
PA758	**506920**
PA759	**506662**
PA761	**506873**
PA762	**506871**
PA763	**506792**
PA764	**506794**
PA765	**506706**
PA767	**506846**
PA768	**506426**
PA773	**506568**
PA774	**506870**
PA774	**506923**
PA779	**506603**
PA780	**506405**
PA781	**506779**
PA782	**506404**
PA783	**506400**
PA786	**506880**
PA793	**506939**

GRAF (.../...)

IAM	Valeo
PA795	506408
PA796	506857
PA800	506685
PA803	506709
PA804	506786
PA805	506730
PA806	506874
PA807	506693
PA809	506929
PA813	506606
PA814	506782
PA819	506677
PA821	506674
PA822	506698
PA823	506702
PA824	506854
PA826	506707
PA827	506708
PA829	506814
PA830	506705
PA832	506789
PA834	506697
PA837	506704
PA855	506855
PA856	506800
PA859	506714
PA860	506788
PA861	506719
PA862	506720
PA862	506918
PA864	506848
PA865	506853
PA866	506686
PA868	506591
PA875	506701
PA876	506811
PA877	506777
PA878	506872
PA879	506700
PA880	506712
PA881	506781
PA882	506717
PA884	506842
PA885	506865
PA888	506875
PA889	506930
PA890	506907
PA893	506919
PA896	506443
PA897	506894
PA899	506882
PA900	506864
PA902	506809
PA903	506694
PA904	506790
PA905	506699
PA907	506725
PA908	506833
PA909	506831
PA911	506574
PA912	506843
PA914	506304
PA917	506544
PA917	506548
PA918	506936
PA919	506844
PA922	506407
PA923	506847
PA924	506439
PA925	506441
PA926	506908
PA927	506836
PA929	506627

GRAF (.../...)

IAM	Valeo
PA930	506734
PA931	506948
PA932	506733
PA933	506536
PA934	506816
PA936	506543
PA938	506715
PA940	506785
PA941	506721
PA943	506321
PA946	506975
PA947	506532
PA949	506812
PA950	506813
PA952	506906
PA954	506867
PA957	506839
PA958	506838
PA959	506837
PA961	506849
PA962	506973
PA963	506851
PA964	506710
PA971/PA971	506810
PA975	506565
PA976	506642
PA977	506863
PA978	506899
PA979	506911
PA980	506876
PA982	506726
PA983	506780
PA983	506968
PA986	506962
PA991	506866
PA992	506980
PA993	506987
PA994	506914
PA995	506731
PA996	506955
PA999	506815

HEPU

P011	506479
P013	506286
P015	506335
P022	506036
P023	506102
P024	506101
P028	506134
P029	506861
P031	506281
P031	506673
P039	506323
P040	506322
P043	506033
P044	506018
P045	506114
P045	506696
P046	506045
P049	506320
P054	506019
P056	506325
P060	506588
P061	506853
P064	506562
P065S	506063
P067	506327
P068	506298
P070	506079
P072	506075
P075	506248

HEPU (.../...)

IAM	Valeo
P077	506352
P080	506010
P081	506167
P084	506860
P086	506293
P088	506294
P094	506397
P095	506143
P097	506572
P100	506299
P1011	506524
P1011	506613
P1012	506518
P1015	506586
P1017	506563
P1019	506585
P1023	506004
P1024	506016
P1031	506645
P1032	506732
P1033	506523
P1034	506864
P1035	506597
P1037	506722
P1039	506559
P1042	506514
P1045	506516
P1047	506519
P1048	506695
P1055	506590
P1058	506686
P1061	506144
P1062	506712
P1064	506640
P1067	506098
P1081	506692
P1081/P345	506589
P1087	506525
P1089	506808
P109	506268
P110	506331
P112	506092
P113	506340
P114	506859
P1161	506304
P1163	506302
P1201	506967
P1203	506961
P122	506334
P122	506379
P127	506598
P131	506962
P134	506833
P135	506676
P136	506671
P137	506865
P138	506882
P139	506875
P140	506593
P141	506678
P142	506660
P143	506592
P144	506650
P145	506651
P147	506787
P148	506832
P149	506675
P1521	506980
P1522	506987
P1529	526005
P1531	506831
P1534	506964
P1538	506926

HEPU (.../...)

IAM	Valeo
P1539	506899
P155/36	506100
P158	506097
P160	506078
P161	506307
P163	506305
P165	506639
P166	506628
P167	506930
P168	506444
P169	506632
P1712	506454
P1713	506456
P1714	506455
P1716	506446
P1717	506538
P1719	506605
P1720	506440
P1723	506478
P1730	506803
P175	506095
P176	506060
P177/P180	506061
P179	506058
P181	506619
P182	506057
P187	506380
P188	506306
P189	506343
P191	506535
P196	506547
P201	506008
P202	506155
P204	506012
P206	506009
P207	506000
P208	506858
P215	506001
P216	506283
P218	506170
P220	506047
P221	506158
P222	506127
P224	506284
P226	506300
P227	506529
P228	506301
P230	506287
P232	506581
P235	506472
P235	506893
P236	506604
P237	506641
P238	506642
P241	506088
P246	506693
P248	506789
P251	506694
P254	506809
P2601	506842
P2607	506830
P2609	506988
P2676	506829
P2677	506827
P282	506913
P283	506820
P284	506821
P294	506173
P297	506165
P309	506084
P310	506085
P312	506007
P313	506482

IAM ⇨ Valeo	
HEPU (.../...)	
P314	**506310**
P316	**506309**
P317	**506308**
P318	**506080**
P320	**506527**
P321	**506839**
P322	**506601**
P324	**506703**
P326	**506697**
P327	**506656**
P328	**506856**
P3305	**506929**
P333	**506153**
P334	**506838**
P335/30	**506048**
P336	**506089**
P338	**506087**
P341	**506481**
P342	**506483**
P346	**506785**
P347	**506657**
P352	**506783**
P353	**506784**
P363	**506837**
P364	**506728**
P365	**506866**
P374	**506716**
P374	**506983**
P384	**506031**
P387	**506006**
P388	**506030**
P397	**506003**
P398	**506005**
P411	**506907**
P412	**506788**
P453	**506445**
P454	**506631**
P455	**506070**
P458	**506169**
P459	**506046**
P461	**506662**
P462	**506289**
P463	**506646**
P464	**506664**
P465	**506052**
P466	**506710**
P467	**506711**
P468	**506663**
P470	**506109**
P471	**506110**
P472	**506107**
P473	**506278**
P474	**506266**
P475	**506141**
P477	**506521**
P478	**506800**
P482	**506919**
P484	**506799**
P495	**506914**
P498	**506862**
P509	**506256**
P511	**506492**
P512	**506667**
P514	**506066**
P515	**506013**
P516	**506227**
P518	**506594**
P519	**506603**
P521	**506240**
P524	**506484**
P525	**506798**
P526	**506190**
P527	**506105**

IAM ⇨ Valeo	
HEPU (.../...)	
P527	**506130**
P528	**506388**
P529	**506186**
P530	**506428**
P531	**506713**
P532	**506434**
P533	**506282**
P534	**506132**
P535	**506336**
P538	**506468**
P539	**506442**
P540	**506385**
P541	**506577**
P542	**506513**
P545	**506790**
P546	**506488**
P547	**506532**
P549	**506533**
P550	**506699**
P550	**506871**
P554	**506873**
P556	**506578**
P557	**506576**
P558	**506706**
P559	**506591**
P563	**506701**
P564	**506786**
P565	**506700**
P566	**506855**
P567	**506877**
P569	**506872**
P570	**506950**
P571	**506587**
P574	**506920**
P575	**506781**
P576	**506726**
P577	**506602**
P578	**506644**
P579	**506794**
P581	**506867**
P582	**506911**
P587	**506876**
P602	**506040**
P603	**506133**
P606	**506526**
P620	**506148**
P622	**506151**
P641	**506634**
P644	**506522**
P645	**506672**
P646	**506874**
P647	**506730**
P655	**506974**
P707	**506881**
P708	**506400**
P710	**506413**
P7121	**506948**
P7123	**506544**
P7123	**506548**
P7125	**506626**
P7131	**506898**
P7133	**506611**
P716	**506880**
P718	**506424**
P719	**506685**
P723	**506610**
P724	**506652**
P725	**506426**
P735	**506737**
P7352	**506429**
P7356	**506733**
P7358	**506606**
P7359	**506779**

IAM ⇨ Valeo	
HEPU (.../...)	
P736	**506534**
P7360	**506927**
P7365	**506702**
P7366	**506705**
P7371	**506717**
P7376	**506360**
P7378	**506416**
P7383	**506682**
P7386	**506731**
P7389	**506924**
P7396	**506965**
P740	**506023**
P7416	**506868**
P7418	**506916**
P742	**506037**
P743	**506438**
P744	**506487**
P745	**506394**
P746	**506436**
P748	**506622**
P750	**506377**
P7502	**506903**
P7503	**506614**
P7506	**506568**
P7508	**506870**
P7508	**506923**
P7509	**506439**
P751	**506091**
P7515	**506908**
P7518	**506904**
P7521	**506975**
P7532	**506973**
P754	**506782**
P7553	**506934**
P7554	**506956**
P7555	**506958**
P757	**506081**
P763	**506433**
P7646	**506982**
P7652	**506625**
P7654	**506618**
P7658	**506847**
P7661	**506543**
P7662	**506928**
P7664	**506627**
P7666	**506848**
P767	**506653**
P7673	**506844**
P7678	**506691**
P768	**506942**
P7683	**506542**
P7687	**506843**
P7695	**506906**
P7704	**506406**
P7705	**506404**
P7706	**506617**
P7708	**506405**
P7715	**506835**
P7724	**506408**
P7726	**506818**
P7731	**506936**
P7732	**506778**
P7733	**506977**
P7734	**506736**
P7738	**506857**
P7739	**506407**
P7743	**506900**
P7745	**506633**
P7746	**506734**
P7758	**506815**
P7761	**506777**
P7765	**506816**
P7768	**506819**

IAM ⇨ Valeo	
HEPU (.../...)	
P7769	**506849**
P7772	**506851**
P7779	**506939**
P7787	**506470**
P7789	**506905**
P7790	**506846**
P7791	**506976**
P7792	**506608**
P7793	**506708**
P7795	**506707**
P7797	**506922**
P7811	**506425**
P7816	**506443**
P7817	**506894**
P782	**506679**
P7820	**506946**
P7822	**506441**
P783	**506661**
P7832	**506812**
P7835	**506810**
P7837	**506925**
P784	**506680**
P784	**506943**
P7841	**506878**
P7842	**506895**
P787	**506418**
P789	**506540**
P791	**506647**
P793	**506648**
P794	**506953**
P795	**506649**
P7982	**506825**
P7983	**506399**
P7985	**506817**
P7988	**506826**
P7989	**506935**
P799	**506659**
P7993	**506897**
P801	**506719**
P803	**506715**
P804	**506721**
P806	**506852**
P807	**506978**
P808	**506955**
P809	**506952**
P812	**506290**
P815	**506014**
P816	**506011**
P817	**506345**
P818	**506315**
P819	**506311**
P820	**506316**
P821	**506032**
P823	**506317**
P827	**506178**
P829	**506582**
P832	**506312**
P832	**506486**
P834	**506367**
P836	**506117**
P837	**506314**
P838	**506596**
P840	**506086**
P841	**506575**
P842	**506655**
P843	**506291**
P844	**506670**
P846	**506704**
P847	**506669**
P848	**506072**
P849	**506573**
P854	**506247**
P857	**506720**

HEPU (.../...)

IAM	Valeo
P867	506108
P871	506029
P875	506245
P877	506230
P878	506122
P882	506292
P889	506531
P890	506643
P891	506595
P893	506714
P895	506530
P901	526006
P913	506106
P914	506073
P915S	506074
P916	506580
P916	506729
P917	506579
P920	506041
P926	506043
P927	506076
P930	506099
P931	506564
P936	506599
P936	506600
P938	506330
P939	506297
P940	506637
P941	506059
P942	506473
P944	506341
P947	506328
P948	506337
P954	506780
P954S	506968
P955	506698
P956	506709
P957	506725
P958	506674
P961	506574
P962	506863
P963	506869
P964	506902
P965	506993
P966	526010
P980	506854

KWP

10007	506817
10081	506041
10088	506079
10095	506108
10097	526001
10101	506036
10103	506190
10105	506100
10108	506031
10114	506026
10119	506097
10121	506346
10130	506173
10131	506009
10140	506337
10142	506059
10146	506066
10148	506013
10149	506069
10153	506001
10156	506230
10161	506248
10162	506352
10163	506098

KWP (.../...)

IAM	Valeo
10178	506106
10187	506010
10189	506247
10190	506245
10197	506032
10201	506091
10202	506377
10208	506413
10230	506860
10232	506000
10233	506186
10234	506048
10235	506003
10243	506141
10244	506089
10245	506328
10247	506076
10252	506122
10256	506011
10264	506052
10269	506383
10270	506278
10278	506165
10282	506043
10284	506040
10285	506143
10293	506134
10297	506170
10301	506330
10303	506088
10304	506256
10308	506274
10312	506044
10314	506050
10319	506428
10320	506713
10321	506008
10322	506158
10323	506155
10324	506087
10325	506005
10326	506084
10340	506144
10344	506434
10345	506102
10346	506101
10348	506029
10351	506410
10352	506412
10353	506473
10354	506268
10365	506560
10366	506119
10366	506386
10369	506169
10370	506266
10372	506115
10374	506004
10375	506016
10377	506095
10379	506070
10380	506249
10383	506132
10385	506028
10390	506046
10391	506117
10393	506014
10394	506075
10395	506340
10397	506859
10399	506123
10401	506012
10404	506151

KWP (.../...)

IAM	Valeo
10406	506343
10409	506080
10410	506085
10412	506099
10413	506133
10415	506482
10418	506167
10422	506105
10422	506130
10423	506240
10424	506388
10425	506282
10426	506018
10427	506114
10427	506696
10428	506045
10430	506109
10431	506110
10434	506023
10435	506037
10439	506401
10440	506127
10441	506006
10442	506007
10443	506030
10444	506293
10446	506078
10447	506619
10448	506060
10450	506380
10451	506294
10452	506295
10454	506474
10479	506938
10486	506468
10491	506290
10492	506479
10494	506286
10495	506639
10496	506335
10497	506296
10498	506302
10501	506284
10503	506297
10508	506437
10509	506283
10513	506345
10514	506311
10517	506858
10527	506074
10529	506312
10530	506367
10530	506620
10531	506019
10532	506314
10533	506315
10534	506316
10535	506411
10536	506317
10537	506368
10538	506436
10539	506394
10540	506429
10541	506308
10542	506291
10543	506072
10544	506292
10546	506227
10547	506341
10549	506033
10550	506022
10550	506347
10551	506424

KWP (.../...)

IAM	Valeo
10552	506334
10552	506379
10553	506298
10554	506092
10555	506390
10556	506391
10557	506861
10559	506063
10562	506320
10564	506322
10565	506323
10567	506058
10568	506189
10570	506445
10571	506153
10572	506309
10573	506073
10574	506086
10575	506148
10577	506310
10578	506444
10579	506667
10580	506305
10582	506306
10583	506307
10588	506300
10590	506287
10591	506336
10592	506442
10596	506508
10597	506486
10599	506299
10602	506487
10603	506385
10604	506631
10607	506514
10608	506628
10609	506513
10610	506547
10611	506622
10612	506472
10613	506632
10616	506516
10617	506484
10619	506522
10621	506518
10622	506563
10623	506519
10625	506521
10626	506613
10627	506579
10628	506035
10629	506523
10631	506525
10632	506580
10632	506729
10633	506564
10635	506357
10636	506526
10637	506527
10638	506528
10639	506581
10640	506529
10641	506530
10642	506531
10643	506582
10645	506584
10646	506585
10647	506586
10650	506732
10653	506643
10654	506578
10657	506644

IAM	Valeo
KWP (.../...)	
10658	**506587**
10659	**506722**
10660	**506534**
10661	**506535**
10663	**506634**
10664	**506481**
10666	**506588**
10667	**506559**
10668	**506679**
10669	**506661**
10670	**506680**
10671	**506589**
10671	**506692**
10674	**506576**
10676	**506577**
10677	**506592**
10678	**506593**
10679	**506594**
10683	**506595**
10684	**506596**
10685	**506669**
10686	**506670**
10687	**506660**
10688	**506538**
10689	**506645**
10690	**506597**
10691	**506672**
10692	**506646**
10693	**506598**
10694	**506647**
10695	**506648**
10696	**506649**
10697	**506406**
10698	**506818**
10700	**506778**
10701	**506736**
10702	**506617**
10703	**506737**
10706	**506671**
10708	**506650**
10709	**506651**
10710	**506787**
10711	**506832**
10712	**506942**
10713	**506652**
10715	**506624**
10716	**506433**
10718	**506610**
10721	**506599**
10722	**506600**
10723	**506637**
10726	**506614**
10727	**506656**
10729	**506601**
10730	**506657**
10731	**506533**
10732	**506835**
10733	**506695**
10736	**506678**
10738	**506659**
10739	**506640**
10741	**506604**
10742	**506641**
10746	**506675**
10747	**506575**
10750	**506783**
10751	**506784**
10752	**506676**
10757	**506602**
10758	**506920**
10759	**506662**
10761	**506873**
10762	**506871**

IAM	Valeo
KWP (.../...)	
10763	**506792**
10764	**506794**
10765	**506706**
10767	**506846**
10768	**506426**
10773	**506568**
10774	**506870**
10774	**506923**
10779	**506603**
10780	**506405**
10781	**506779**
10782	**506404**
10783	**506400**
10786	**506880**
10793	**506939**
10795	**506408**
10796	**506857**
10800	**506685**
10803	**506709**
10804	**506786**
10805	**506730**
10806	**506874**
10807	**506693**
10809	**506929**
10813	**506606**
10814	**506782**
10819	**506677**
10821	**506674**
10822	**506698**
10823	**506702**
10824	**506854**
10826	**506707**
10827	**506708**
10829	**506814**
10830	**506705**
10832	**506789**
10834	**506697**
10837	**506704**
10855	**506855**
10856	**506800**
10859	**506714**
10860	**506788**
10861	**506719**
10862	**506720**
10862	**506918**
10864	**506848**
10865	**506853**
10866	**506686**
10868	**506591**
10875	**506701**
10876	**506811**
10877	**506777**
10878	**506872**
10879	**506700**
10880	**506712**
10881	**506781**
10882	**506717**
10884	**506842**
10885	**506865**
10888	**506875**
10889	**506930**
10890	**506907**
10893	**506919**
10896	**506443**
10897	**506894**
10899	**506882**
10900	**506864**
10902	**506809**
10903	**506694**
10904	**506790**
10905	**506699**
10907	**506725**
10908	**506833**

IAM	Valeo
KWP (.../...)	
10909	**506831**
10911	**506574**
10912	**506843**
10914	**506304**
10917	**506544**
10917	**506548**
10918	**506936**
10919	**506844**
10922	**506407**
10923	**506847**
10924	**506439**
10925	**506441**
10926	**506908**
10927	**506836**
10929	**506627**
10930	**506734**
10931	**506948**
10932	**506733**
10933	**506536**
10934	**506816**
10936	**506543**
10938	**506715**
10940	**506785**
10941	**506721**
10943	**506321**
10946	**506975**
10947	**506532**
10949	**506812**
10950	**506813**
10952	**506906**
10954	**506867**
10957	**506839**
10958	**506838**
10959	**506837**
10961	**506849**
10962	**506973**
10963	**506851**
10964	**506710**
10975	**506565**
10976	**506642**
10977	**506863**
10978	**506899**
10979	**506911**
10980	**506876**
10982	**506726**
10983	**506780**
10983	**506968**
10986	**506962**
10991	**506866**
10992	**506980**
10993	**506987**
10994	**506914**
10995	**506731**
10996	**506955**
10999	**506815**
101001	**506905**
101002	**506935**
101003	**506956**
101006	**506926**
101009	**506900**
101010	**506877**
101012	**506958**
101013	**506878**
101017	**506904**
101019	**506325**
101020	**506852**
101021	**506897**
101023	**506976**
101024	**506819**
101026	**506961**
101027	**506964**
101028	**526005**
101030	**506967**

IAM	Valeo
KWP (.../...)	
101035	**506573**
101036	**506903**
101037	**506902**
101041	**506798**
101046	**506711**
101048	**506988**
101049	**506978**
101051	**506950**
101053	**506663**
101054	**506664**
101055	**506826**
101062	**506895**
101063	**506922**
101066	**506927**
101067	**506952**
101070	**506916**
101082	**526006**
101083	**506716**
101083	**506983**
101085	**506808**
101088	**506977**
101089	**506974**
101091	**506993**
101095	**526010**
101134	**506982**
101143	**506825**
101144	**506618**
107508	**506488**
101047/10719	**506653**
1018A	**506517**
10240/10315	**506178**
10285/10585	**506572**
10286A	**506397**
1029A	**506047**
10338A	**506562**
10378A	**506561**
1037A	**506399**
10414A	**506057**
10420A	**506281**
10420A	**506673**
10432A	**506107**
10449/10735	**506061**
10502A	**506289**
10519A	**506440**
10541A	**506703**
10572A	**506856**
10589A	**506301**
10626/10630	**506524**
10665/10728	**506483**
10672/10615	**506590**
10724A	**506655**
1093A	**506438**
10970/10971	**506810**
MAGNETI MARELLI	
350981300000	**506294**
350981301000	**506645**
350981302000	**506281**
350981302000	**506673**
350981316000	**506514**
350981318000	**506586**
350981319000	**506585**
350981320000	**506584**
350981322000	**506335**
350981324000	**506295**
350981325000	**506297**
350981329000	**506516**
350981331000	**506518**
350981332000	**506304**
350981333000	**506299**
350981334000	**506106**
350981335000	**506302**

MAGNETI MARELLI (.../...)

IAM	Valeo
350981339000	506334
350981339000	506379
350981341000	506523
350981342000	506563
350981343000	506524
350981343000	506613
350981344000	506695
350981346000	506670
350981347000	506559
350981348000	506525
350981351000	506597
350981352000	506590
350981353000	506291
350981362000	506692
350981365000	506298
350981367000	506292
350981368000	506669
350981369000	506598
350981369000	506686
350981370000	506640
350981415000	506079
350981419000	506010
350981423000	506248
350981425000	506860
350981431000	506508
350981434000	506063
350981436000	506167
350981443000	506134
350981456000	506562
350981458000	506268
350981460000	506859
350981464000	506560
350981469000	506144
350981477000	506115
350981479000	506340
350981482000	506143
350981485000	506119
350981485000	506386
350981488000	506474
350981489000	506293
350981490000	506123
350981498000	506256
350981499000	506306
350981503000	506100
350981504000	506078
350981506000	506060
350981508000	506343
350981509000	506639
350981512000	506029
350981513000	506290
350981520000	506013
350981521000	506066
350981522000	506667
350981525000	506240
350981528000	506513
350981529000	506603
350981531000	506001
350981532000	506009
350981535000	506000
350981536000	506165
350981538000	506008
350981543000	506006
350981544000	506031
350981546000	506346
350981548000	506003
350981549000	506007
350981550000	506309
350981551000	506310
350981552000	506108
350981554000	506011
350981574000	506019
350981576000	506076
350981578000	506564

MAGNETI MARELLI (.../...)

IAM	Valeo
350981582000	506069
350981584000	506052
350981585000	506278
350981586000	506141
350981587000	506046
350981588000	506107
350981589000	506110
350981590000	506109
350981593000	506105
350981596000	506312
350981596000	506486
350981598000	506472
350981601000	506040
350981602000	506858
350981603000	506170
350981605000	506087
350981606000	506005
350981608000	506072
350981612000	506004
350981614000	506018
350981616000	506169
350981617000	506266
350981618000	506249
350981619000	506151
350981621000	506133
350981642000	506117
350981642000	506574
350981650000	506012
350981651000	506529
350981653000	506127
350981657000	506301
350981658000	506300
350981659000	506088
350981660000	506473
350981661000	506099
350981664000	506074
350981666000	506311
350981667000	506317
350981680000	506080
350981681000	506030
350981682000	506084
350981683000	506132
350981684000	506085
350981685000	506482
350981687000	506153
350981700000	506336
350981701000	506488
350981702000	506790
350981703000	506532
350981705000	506591
350981706000	506533
350981707000	506320
350981709000	506322
350981710000	506531
350981711000	506530
350981712000	506596
350981713000	506575
350981716000	506581
350981722000	506305
350981722000	506535
350981723000	506307
350981724000	506547
350981725000	506660
350981726000	506671
350981728000	506650
350981729000	506651
350981730000	506787
350981733000	506538
350981742000	506368
350981743000	506622
350981745000	506437
350981745000	506737
350981747000	506657

MAGNETI MARELLI (.../...)

IAM	Valeo
350981748000	506483
350981749000	506601
350981751000	506656
350981752000	506582
350981753000	506595
350981755000	506345
350981756000	506367
350981757000	506315
350981758000	506316
350981759000	506314
350981760000	506579
350981761000	506637
350981762000	506580
350981766000	506942
350981767000	506652
350981768000	506653
350981772000	506388
350981773000	506484
350981774000	506592
350981777000	506576
350981778000	506325
350981779000	506853
350981781000	506647
350981782000	506649
350981784000	506406
350981785000	506818
350981786000	506617
350981790000	506614
350981791000	506700
350981791000	506873
350981793000	506646
350981794000	506662
350981795000	506663
350981796000	506664
350981797000	506704
350981798000	506714
350981799000	506720
350981799000	506918
350981800000	506719
350981801000	506397
350981802000	506641
350981803000	506604
350981804000	506694
350981805000	506693
350981807000	506786
350981808000	506707
350981809000	506848
350981810000	506863
350981812000	506839
350981814000	506698
350981816000	506699
350981816000	506871
350981816000	506872
350981817000	506703
350981818000	506785
350981819000	506781
350981821000	506907
350981828000	506073
350981829000	506043
350981831000	506186
350981832000	506434
350981834000	506783
350981835000	506784
350981836000	506697
350981837000	506777
350981837000	506897
350981838000	506661
350981839000	506680
350981839000	506943
350981840000	506706
350981844000	506643
350981846000	506527
350981847000	506481

MAGNETI MARELLI (.../...)

IAM	Valeo
350981852000	506599
350981852000	506600
350981856000	506587
350981857000	506588
350981858000	506568
350981859000	506710
350981860000	506808
350981864000	506854
350981865000	506867
350981866000	506798
350981867000	506855
350981868000	506725
350981869000	506715
350981871000	506728
350981999000	506148
350982001000	506227
350982004000	506283
350982005000	506308
350982010000	506919
350982011000	506838
350982012000	506844
350982013000	506701
350982013000	506874
350982014000	506717
350982015000	506911
350982016000	506721
350982017000	506899
350982018000	506809
350982023000	506702
350982024000	506864
350982025000	506876
350982026000	506975
350982027000	506893
350982028000	506705
350982047000	506875
350982049000	506962
350982057000	506789
350982066000	506955
350982070000	506967
350982081000	506794
350982082000	506831
350982083000	506837
350982084000	506675
350982086000	506712
350982087000	506593
350982087000	506678
350982088000	506676
350982090000	506968
350982093000	506878
350982094000	506961
350982097000	506950
350982098000	506993
350982099000	526010
350983000000	506974
350983002000	506930
351170120000	506861
351170620000	506036
351170820000	506286
351953205000	506101
352316170016	506479
352316170040	506445
352316170041	506631
352316170042	506289
352316170045	506521
352316170047	506800
352316170050	506788
352316170055	506799
352316170056	506070
352316170071	506877
352316170086	506605
352316170091	506454
352316170093	506803
352316170094	506823

MAGNETI MARELLI (.../...)

352316170096	**506478**
352316170120	**506391**
352316170121	**506390**
352316170146	**506284**
352316170171	**506155**
352316170176	**506287**
352316170274	**506047**
352316170278	**506913**
352316170296	**506722**
352316170330	**506519**
352316170342	**506561**
352316170441	**506321**
352316170443	**506441**
352316170445	**506045**
352316170457	**506812**
352316170459	**506810**
352316170460	**506894**
352316170461	**506443**
352316170462	**506540**
352316170465	**506033**
352316170478	**506895**
352316170548	**506819**
352316170554	**506813**
352316170555	**506816**
352316170556	**506817**
352316170557	**506825**
352316170562	**506826**
352316170587	**506405**
352316170587	**506778**
352316170588	**506734**
352316170589	**506900**
352316170591	**506936**
352316170592	**506407**
352316170596	**506408**
352316170607	**506633**
352316170609	**506835**
352316170610	**506736**
352316170613	**506857**
352316170618	**506815**
352316170635	**506404**
352316170641	**506958**
352316170642	**506956**
352316170658	**506095**
352316170662	**506619**
352316170676	**506058**
352316170679	**506380**
352316170684	**506882**
352316170686	**506865**
352316170689	**506832**
352316170691	**506833**
352316170694	**506632**
352316170696	**506444**
352316170704	**506926**
352316170707	**506628**
352316170719	**506061**
352316170730	**506424**
352316170732	**506626**
352316170738	**506536**
352316170739	**506898**
352316170742	**506548**
352316170755	**506611**
352316170758	**506973**
352316170763	**506377**
352316170764	**506037**
352316170769	**506091**
352316170771	**506023**
352316170775	**506438**
352316170777	**506487**
352316170779	**506416**
352316170784	**506436**
352316170790	**506606**
352316170793	**506534**
352316170797	**506782**

MAGNETI MARELLI (.../...)

352316170804	**506779**
352316170809	**506394**
352316170813	**506429**
352316170850	**506089**
352316170869	**506048**
352316170878	**506856**
352316170880	**506866**
352316170887	**506178**
352316170894	**506014**
352316170900	**506230**
352316170910	**506032**
352316170938	**506323**
352316170944	**506827**
352316170946	**506829**
352316170947	**506696**
352316170949	**506842**
352316170954	**506059**
352316170974	**506086**
352316170977	**506341**
352316170989	**506337**
352316171003	**506870**
352316171007	**506659**
352316171009	**506923**
352316171013	**506908**
352316171017	**506526**
352316171027	**506634**
352316171029	**506672**
352316171034	**506730**
352316171035	**506440**
352316171039	**506439**
352316171053	**506928**
352316171055	**506627**
352316171059	**506846**
352316171060	**506410**
352316171065	**506468**
352316171066	**506411**
352316171082	**506618**
352316171083	**506691**
352316171099	**506843**
352316171109	**506847**
352316171114	**506608**
352316171136	**506851**
352316171144	**506470**
352316171150	**506849**
352316171167	**506190**
352316171168	**506428**
352316171173	**506385**
352316171181	**506442**
352316171181	**506517**
352316171181	**506792**
352316171186	**506577**
352316171187	**506713**
352316171188	**506282**
352316171194	**506578**
352316171197	**506726**
352316171207	**506602**
352316171219	**506026**
352316171220	**506044**

METELLI

24-0017	**506098**
24-0081	**506041**
24-0088	**506079**
24-0095	**506108**
24-0101	**506036**
24-0103	**506190**
24-0105	**506100**
24-0108	**506031**
24-0117	**506858**
24-0119	**506097**
24-0131	**506009**
24-0140	**506337**

METELLI (.../...)

24-0142	**506059**
24-0146	**506066**
24-0148	**506013**
24-0153	**506001**
24-0156	**506230**
24-0161	**506248**
24-0162	**506352**
24-0178	**506106**
24-0187	**506010**
24-0189	**506247**
24-0190	**506245**
24-0197	**506032**
24-0201	**506091**
24-0202	**506377**
24-0208	**506413**
24-0230	**506860**
24-0232	**506000**
24-0233	**506186**
24-0234	**506048**
24-0235	**506003**
24-0243	**506141**
24-0244	**506089**
24-0245	**506328**
24-0247	**506076**
24-0252	**506122**
24-0256	**506011**
24-0264	**506052**
24-0270	**506278**
24-0278	**506165**
24-0279	**506667**
24-0282	**506043**
24-0284	**506040**
24-0285	**506143**
24-0286A	**506397**
24-0292	**506572**
24-0293	**506134**
24-0297	**506170**
24-0301	**506330**
24-0303	**506088**
24-0304	**506256**
24-0315	**506178**
24-0319	**506428**
24-0320	**506713**
24-0321	**506008**
24-0322	**506158**
24-0324	**506087**
24-0325	**506005**
24-0326	**506084**
24-0338A	**506562**
24-0340	**506144**
24-0344	**506434**
24-0345	**506102**
24-0346	**506101**
24-0348	**506029**
24-0353	**506473**
24-0354	**506268**
24-0365	**506560**
24-0366	**506119**
24-0366	**506386**
24-0369	**506169**
24-0370	**506266**
24-0372	**506115**
24-0374	**506004**
24-0375	**506016**
24-0377	**506095**
24-0378A	**506561**
24-0379	**506070**
24-0383	**506132**
24-0390	**506046**
24-0391	**506117**
24-0393	**506014**
24-0394	**506075**
24-0395	**506340**

METELLI (.../...)

24-0397	**506859**
24-0399	**506123**
24-0401	**506012**
24-0404	**506151**
24-0406	**506343**
24-0409	**506080**
24-0410	**506085**
24-0412	**506099**
24-0413	**506133**
24-0414A	**506057**
24-0415	**506482**
24-0418	**506167**
24-0420A	**506281**
24-0420A	**506673**
24-0422	**506105**
24-0422	**506130**
24-0423	**506240**
24-0424	**506388**
24-0425	**506282**
24-0426	**506018**
24-0427	**506114**
24-0427	**506696**
24-0428	**506045**
24-0430	**506109**
24-0431	**506110**
24-0432A	**506107**
24-0434	**506023**
24-0435	**506037**
24-0439	**506401**
24-0440	**506127**
24-0441	**506006**
24-0442	**506007**
24-0443	**506030**
24-0444	**506293**
24-0446	**506078**
24-0447	**506619**
24-0448	**506060**
24-0450	**506380**
24-0451	**506294**
24-0452	**506295**
24-0454	**506474**
24-0486	**506468**
24-0491	**506290**
24-0492	**506479**
24-0494	**506286**
24-0495	**506639**
24-0496	**506335**
24-0498	**506302**
24-0501	**506284**
24-0502A	**506289**
24-0503	**506297**
24-0509	**506283**
24-0513	**506345**
24-0514	**506311**
24-0519A	**506440**
24-0527	**506074**
24-0529	**506312**
24-0529	**506486**
24-0530	**506367**
24-0530	**506620**
24-0531	**506019**
24-0532	**506314**
24-0533	**506315**
24-0534	**506316**
24-0535	**506411**
24-0536	**506317**
24-0538	**506436**
24-0539	**506394**
24-0540	**506429**
24-0541	**506308**
24-0541A	**506703**
24-0542	**506291**
24-0543	**506072**

IAM	Valeo
METELLI (.../...)	
24-0544	**506292**
24-0546	**506227**
24-0547	**506341**
24-0549	**506033**
24-0550	**506022**
24-0550	**506347**
24-0551	**506424**
24-0552	**506334**
24-0552	**506379**
24-0553	**506298**
24-0554	**506092**
24-0557	**506861**
24-0559	**506063**
24-0562	**506320**
24-0564	**506322**
24-0565	**506323**
24-0567	**506058**
24-0570	**506445**
24-0571	**506153**
24-0572	**506309**
24-0572A	**506856**
24-0573	**506073**
24-0574	**506086**
24-0575	**506148**
24-0577	**506310**
24-0578	**506444**
24-0580	**506305**
24-0582	**506306**
24-0583	**506307**
24-0588	**506300**
24-0589A	**506301**
24-0590	**506287**
24-0591	**506336**
24-0592	**506442**
24-0599	**506299**
24-0602	**506487**
24-0603	**506385**
24-0604	**506631**
24-0607	**506514**
24-0608	**506628**
24-0609	**506513**
24-0610	**506547**
24-0611	**506622**
24-0612	**506472**
24-0612	**506893**
24-0613	**506632**
24-0616	**506516**
24-0617	**506484**
24-0620	**506523**
24-0621	**506518**
24-0622	**506563**
24-0623	**506519**
24-0625	**506521**
24-0626	**506524**
24-0626	**506613**
24-0627	**506579**
24-0631	**506525**
24-0632	**506580**
24-0632	**506729**
24-0633	**506564**
24-0636	**506526**
24-0637	**506527**
24-0639	**506581**
24-0640	**506529**
24-0641	**506530**
24-0642	**506531**
24-0643	**506582**
24-0645	**506584**
24-0646	**506585**
24-0647	**506586**
24-0650	**506732**
24-0653	**506643**
24-0654	**506578**

IAM	Valeo
METELLI (.../...)	
24-0657	**506644**
24-0658	**506587**
24-0659	**506722**
24-0660	**506534**
24-0661	**506535**
24-0662	**506488**
24-0663	**506634**
24-0664	**506481**
24-0666	**506588**
24-0667	**506559**
24-0668	**506679**
24-0669	**506661**
24-0671	**506589**
24-0671	**506692**
24-0672	**506590**
24-0674	**506576**
24-0676	**506577**
24-0677	**506592**
24-0678	**506593**
24-0679	**506594**
24-0683	**506595**
24-0684	**506596**
24-0685	**506669**
24-0686	**506670**
24-0687	**506660**
24-0688	**506538**
24-0689	**506645**
24-0690	**506597**
24-0691	**506672**
24-0692	**506646**
24-0693	**506598**
24-0694	**506647**
24-0696	**506649**
24-0698	**506818**
24-0701	**506736**
24-0703	**506737**
24-0706	**506671**
24-0708	**506650**
24-0709	**506651**
24-0710	**506787**
24-0711	**506832**
24-0721	**506599**
24-0721	**506600**
24-0723	**506637**
24-0724A	**506655**
24-0727	**506656**
24-0728	**506483**
24-0729	**506601**
24-0730	**506657**
24-0731	**506533**
24-0732	**506835**
24-0733	**506695**
24-0735	**506061**
24-0736	**506678**
24-0738	**506659**
24-0739	**506640**
24-0741	**506604**
24-0742	**506641**
24-0746	**506675**
24-0747	**506575**
24-0750	**506783**
24-0751	**506784**
24-0752	**506676**
24-0757	**506602**
24-0758	**506920**
24-0759	**506662**
24-0761	**506873**
24-0762	**506699**
24-0762	**506871**
24-0764	**506794**
24-0765	**506706**
24-0767	**506846**
24-0773	**506568**

IAM	Valeo
METELLI (.../...)	
24-0774	**506870**
24-0774	**506923**
24-0779	**506603**
24-0780	**506405**
24-0781	**506779**
24-0783	**506400**
24-0791	**506426**
24-0795	**506408**
24-0796	**506857**
24-0803	**506709**
24-0804	**506786**
24-0805	**506730**
24-0806	**506874**
24-0807	**506693**
24-0809	**506929**
24-0813	**506606**
24-0814	**506782**
24-0820	**506780**
24-0821	**506674**
24-0822	**506698**
24-0823	**506702**
24-0824	**506854**
24-0826	**506707**
24-0827	**506708**
24-0830	**506705**
24-0832	**506789**
24-0834	**506697**
24-0837	**506704**
24-0855	**506855**
24-0856	**506800**
24-0859	**506714**
24-0860	**506788**
24-0861	**506719**
24-0862	**506720**
24-0862	**506918**
24-0864	**506848**
24-0865	**506853**
24-0866	**506686**
24-0868	**506591**
24-0875	**506701**
24-0877	**506777**
24-0878	**506872**
24-0879	**506700**
24-0880	**506712**
24-0881	**506781**
24-0882	**506717**
24-0884	**506842**
24-0885	**506865**
24-0888	**506875**
24-0889	**506930**
24-0890	**506907**
24-0893	**506919**
24-0897	**506894**
24-0899	**506882**
24-0900	**506864**
24-0902	**506809**
24-0903	**506694**
24-0904	**506790**
24-0907	**506725**
24-0908	**506833**
24-0909	**506831**
24-0911	**506574**
24-0912	**506843**
24-0914	**506304**
24-0917	**506544**
24-0917	**506548**
24-0918	**506936**
24-0919	**506844**
24-0923	**506847**
24-0924	**506439**
24-0925	**506441**
24-0926	**506908**
24-0929	**506627**

IAM	Valeo
METELLI (.../...)	
24-0930	**506734**
24-0931	**506948**
24-0932	**506733**
24-0934	**506816**
24-0936	**506543**
24-0938	**506715**
24-0940	**506785**
24-0941	**506721**
24-0943	**506321**
24-0945	**506942**
24-0946	**506975**
24-0947	**506532**
24-0949	**506812**
24-0952	**506906**
24-0954	**506867**
24-0957	**506839**
24-0958	**506838**
24-0959	**506837**
24-0961	**506849**
24-0962	**506973**
24-0963	**506851**
24-0964	**506710**
24-0966	**506522**
24-0970	**506810**
24-0976	**506642**
24-0977	**506863**
24-0978	**506899**
24-0979	**506911**
24-0980	**506876**
24-0982	**506726**
24-0983	**506968**
24-0986	**506962**
24-0991	**506866**
24-0992	**506980**
24-0993	**506987**
24-0994	**506914**
24-0995	**506731**
24-0996	**506955**
24-0999	**506815**
24-1001	**506905**
24-1002	**506935**
24-1003	**506956**
24-1006	**506926**
24-1009	**506900**
24-1010	**506877**
24-1012	**506958**
24-1013	**506878**
24-1017	**506904**
24-1019	**506325**
24-1020	**506852**
24-1021	**506897**
24-1023	**506976**
24-1024	**506819**
24-1026	**506961**
24-1027	**506964**
24-1028	**526005**
24-1030	**506967**
24-1035	**506573**
24-1036	**506903**
24-1037	**506902**
24-1041	**506798**
24-1046	**506711**
24-1047	**506653**
24-1048	**506988**
24-1049	**506978**
24-1051	**506950**
24-1053	**506663**
24-1054	**506664**
24-1055	**506826**
24-1062	**506895**
24-1063	**506922**
24-1066	**506927**
24-1067	**506952**

METELLI (.../...)

24-1070	**506916**
24-1082	**526006**
24-1083	**506716**
24-1083	**506983**
24-1085	**506808**
24-1088	**506977**
24-1089	**506974**
24-1091	**506993**
24-1095	**526010**
24-1143	**506825**
24-1144	**506618**

PIERBURG

7.22843.06.0	**700405**
7.24809.06.0	**700407**

QUINTON HAZELL

QCP1008	**506245**
QCP1018	**506063**
QCP1292	**506074**
QCP1294	**506105**
QCP1350	**506007**
QCP1360	**506328**
QCP1375	**506278**
QCP1400	**506425**
QCP1431	**506134**
QCP1434	**506859**
QCP1435	**506060**
QCP1445	**506330**
QCP1498	**506473**
QCP1531	**506782**
QCP1535	**506357**
QCP1550	**506097**
QCP2022	**506186**
QCP2051	**506413**
QCP2062	**506031**
QCP2074	**506247**
QCP2100	**506048**
QCP2110	**506075**
QCP2111	**506079**
QCP2112	**506248**
QCP2127	**506081**
QCP2135	**506410**
QCP2172	**506412**
QCP2182	**506004**
QCP2189	**506003**
QCP2226	**506190**
QCP2300	**506089**
QCP2301	**506016**
QCP2304	**506000**
QCP2328	**506023**
QCP2333	**506860**
QCP2335	**506327**
QCP2338	**506178**
QCP2340	**506383**
QCP2354	**506095**
QCP2358	**506052**
QCP2364	**506036**
QCP2369	**506861**
QCP2370	**506508**
QCP2405	**506429**
QCP2433	**506406**
QCP2438	**506411**
QCP2450	**506078**
QCP2456	**506170**
QCP2458	**506043**
QCP2471	**506006**
QCP2472	**506040**
QCP2474	**506076**
QCP2478	**506070**
QCP2481	**506331**

QUINTON HAZELL (.../...)

QCP2492	**506035**
QCP2495	**506158**
QCP2496	**506088**
QCP2499	**506072**
QCP2500	**506106**
QCP2506	**506025**
QCP2508	**506689**
QCP2512	**506005**
QCP2513	**506030**
QCP2517	**506087**
QCP2525	**506858**
QCP2526	**506009**
QCP2527	**506008**
QCP2532	**506880**
QCP2544	**506050**
QCP2545	**506165**
QCP2560	**506061**
QCP2565	**506155**
QCP2567	**506428**
QCP2570	**506562**
QCP2572	**506268**
QCP2575	**506143**
QCP2580	**506827**
QCP2587	**506256**
QCP2591	**506151**
QCP2596	**506939**
QCP2612	**506037**
QCP2614	**506830**
QCP2615	**506167**
QCP2634	**506540**
QCP2639	**506424**
QCP2642	**506102**
QCP2645	**506132**
QCP2646	**506169**
QCP2647	**506266**
QCP2652	**506012**
QCP2660	**506099**
QCP2661	**506019**
QCP2662	**506086**
QCP2663	**506133**
QCP2665	**506713**
QCP2667	**506057**
QCP2668	**506058**
QCP2671	**506046**
QCP2674	**506434**
QCP2683	**506560**
QCP2683BH	**506722**
QCP2686	**506085**
QCP2689	**506084**
QCP2696BH	**506119**
QCP2696BH	**506386**
QCP2697BH	**506561**
QCP2702	**506426**
QCP2705	**506028**
QCP2735	**506107**
QCP2743	**506018**
QCP2743	**506114**
QCP2746	**506482**
QCP2800	**506080**
QCP2801	**506073**
QCP2815	**506401**
QCP2817	**506380**
QCP2832	**506416**
QCP2862	**506634**
QCP2864	**506619**
QCP2872	**506778**
QCP2873	**506291**
QCP2874	**506642**
QCP2884	**506014**
QCP2887	**506300**
QCP2888	**506281**
QCP2888	**506673**
QCP2889	**506284**

QUINTON HAZELL (.../...)

QCP2891	**506029**
QCP2894	**506127**
QCP2899	**506123**
QCP2901	**506130**
QCP2904	**506286**
QCP2905	**506479**
QCP2906	**506622**
QCP2908	**506407**
QCP2914	**506606**
QCP2925	**506388**
QCP2928	**506044**
QCP2931	**506340**
QCP2932	**506474**
QCP2933	**506293**
QCP2934	**506047**
QCP2941	**506011**
QCP2943	**506436**
QCP2944	**506117**
QCP2946	**506652**
QCP2949	**506400**
QCP2949	**506685**
QCP2961	**506101**
QCP2962	**506528**
QCP2971	**506343**
QCP2974	**506779**
QCP2978	**506624**
QCP2984	**506285**
QCP2985	**506296**
QCP2986	**506294**
QCP2987	**506295**
QCP2989	**506639**
QCP2990	**506283**
QCP2991	**506870**
QCP2997	**506022**
QCP2997	**506347**
QCP3036	**506614**
QCP3037	**506568**
QCP3042	**506625**
QCP3046	**506846**
QCP3058	**506310**
QCP3059	**506309**
QCP3059	**506856**
QCP3060	**506045**
QCP3067	**506109**
QCP3070	**506292**
QCP3072	**506929**
QCP3074	**506299**
QCP3084	**506308**
QCP3092	**506335**
QCP3093	**506336**
QCP3094	**506644**
QCP3095	**506442**
QCP3095	**506792**
QCP3099	**506682**
QCP3100	**506287**
QCP3102	**506297**
QCP3103	**506444**
QCP3105	**506306**
QCP3111	**506304**
QCP3112	**506302**
QCP3113BH	**506298**
QCP3114	**506334**
QCP3114	**506379**
QCP3115	**506519**
QCP3119	**506305**
QCP3119	**506535**
QCP3124	**506317**
QCP3125	**506320**
QCP3129	**506470**
QCP3135	**506153**
QCP3137	**506314**
QCP3138	**506316**
QCP3139	**506315**

QUINTON HAZELL (.../...)

QCP3140	**506312**
QCP3140	**506486**
QCP3154	**506522**
QCP3155	**506484**
QCP3156	**506513**
QCP3157	**506385**
QCP3165	**506290**
QCP3170	**506307**
QCP3173	**506547**
QCP3175	**506321**
QCP3177	**506737**
QCP3179	**506367**
QCP3179	**506620**
QCP3180	**506440**
QCP3181	**506439**
QCP3186	**506311**
QCP3189	**506847**
QCP3190	**506936**
QCP3195	**506240**
QCP3202	**506345**
QCP3208	**506523**
QCP3209	**506514**
QCP3211	**506518**
QCP3212	**506594**
QCP3212/QCP4453	**506666**
QCP3212BH	**506603**
QCP3213	**506517**
QCP3215	**506631**
QCP3216	**506521**
QCP3219	**506516**
QCP3224	**506472**
QCP3225	**506628**
QCP3226	**506579**
QCP3227	**506573**
QCP3229	**506588**
QCP3230	**506443**
QCP3231	**506661**
QCP3234	**506441**
QCP3234	**506679**
QCP3235	**506680**
QCP3235	**506943**
QCP3238	**506836**
QCP3243	**506529**
QCP3244	**506610**
QCP3245	**506544**
QCP3250	**506857**
QCP3255	**506527**
QCP3257	**506322**
QCP3260	**506536**
QCP3261	**506543**
QCP3271	**506881**
QCP3272	**506736**
QCP3274	**506301**
QCP3277	**506948**
QCP3278	**506548**
QCP3281	**506633**
QCP3285	**506903**
QCP3289	**506669**
QCP3289	**506670**
QCP3290	**506601**
QCP3291	**506323**
QCP3293	**506483**
QCP3299	**506580**
QCP3300	**506784**
QCP3301	**506526**
QCP3303	**506904**
QCP3304	**506576**
QCP3305BH	**506599**
QCP3305BH	**506600**
QCP3306	**506532**
QCP3308	**506828**
QCP3313	**506581**
QCP3316	**506525**

QUINTON HAZELL (.../...)

IAM	Valeo
QCP3318	506645
QCP3319	506592
QCP3322	506531
QCP3323	506530
QCP3326	506578
QCP3327	506595
QCP3329	506602
QCP3332	506731
QCP3336	506818
QCP3338	506408
QCP3345	506649
QCP3346	506648
QCP3348	506534
QCP3355	506691
QCP3359	506618
QCP3360	506659
QCP3361	506777
QCP3363	506589
QCP3363	506692
QCP3364	506597
QCP3365	506577
QCP3366	506590
QCP3367	506524
QCP3367	506613
QCP3368	506538
QCP3369	506587
QCP3370	506397
QCP3372	506591
QCP3373	506646
QCP3375	506643
QCP3376	506596
QCP3377	506584
QCP3378	506586
QCP3379	506585
QCP3380	506593
QCP3380	506678
QCP3381	506787
QCP3382	506676
QCP3383	506671
QCP3384	506650
QCP3385	506651
QCP3386	506656
QCP3387	506657
QCP3390	506637
QCP3391	506575
QCP3392	506869
QCP3395	506786
QCP3397	506660
QCP3398	506141
QCP3399BH	506144
QCP3401	506617
QCP3402	506632
QCP3403	506115
QCP3404	506282
QCP3405	506723
QCP3405BH	506559
QCP3407	506563
QCP3408	506604
QCP3410	506641
QCP3413	506928
QCP3415	506627
QCP3416	506542
QCP3417	506829
QCP3420	506608
QCP3421	506574
QCP3422	506640
QCP3425	506835
QCP3427	506539
QCP3429	506942
QCP3430	506708
QCP3431	506848
QCP3434	506799
QCP3435	506598

QUINTON HAZELL (.../...)

IAM	Valeo
QCP3435	506686
QCP3437	506707
QCP3442	506533
QCP3443	506816
QCP3444	506825
QCP3448	506908
QCP3452	506844
QCP3454	506647
QCP3458	506871
QCP3458	506872
QCP3460	506898
QCP3461	506894
QCP3472	506900
QCP3473	506733
QCP3475	506672
QCP3476	506700
QCP3477	506794
QCP3480	506853
QCP3482	506874
QCP3483	506481
QCP3484	506564
QCP3486	506953
QCP3488	506813
QCP3492	506720
QCP3493	506712
QCP3494	506719
QCP3495	506488
QCP3496	506732
QCP3500	506815
QCP3501	506819
QCP3504	506664
QCP3505	506663
QCP3506	506662
QCP3507	506698
QCP3508	506674
QCP3510	506697
QCP3512	506788
QCP3513	506783
QCP3515	506800
QCP3516	506703
QCP3517	506785
QCP3519	506862
QCP3520	506709
QCP3521	506714
QCP3522	506725
QCP3523	506780
QCP3525	506882
QCP3527	506843
QCP3531	506810
QCP3534	506399
QCP3537	506817
QCP3539	506694
QCP3540	506839
QCP3542	506693
QCP3544	506704
QCP3547	506781
QCP3548	506907
QCP3549	506789
QCP3550	506716
QCP3550PL	506983
QCP3551	506715
QCP3552	506706
QCP3553	506696
QCP3554	506730
QCP3555	506702
QCP3556	506854
QCP3558	506705
QCP3561	506711
QCP3563	506831
QCP3566	506808
QCP3567	506701
QCP3568	506865
QCP3569	506930

QUINTON HAZELL (.../...)

IAM	Valeo
QCP3570	506919
QCP3571	506675
QCP3573	506842
QCP3574	506851
QCP3575	506975
QCP3576	506798
QCP3577	506906
QCP3578	506721
QCP3579	506717
QCP3581	506958
QCP3582	506916
QCP3584BH	506653
QCP3588	506826
QCP3590	506838
QCP3592	506790
QCP3594	506868
QCP3595	506812
QCP3602	506855
QCP3603	506710
QCP3604	506809
QCP3605	506837
QCP3607	506867
QCP3611	506695
QCP3615	506956
QCP3616	506934
QCP3617	506875
QCP3618	506911
QCP3620	506920
QCP3621	506873
QCP3623	506699
QCP3624	506899
QCP3626	506893
QCP3627	506876
QCP3629	506863
QCP3630	506926
QCP3632	506864
QCP3633	506833
QCP3634	506728
QCP3635	506726
QCP3636	506962
QCP3637	506973
QCP3638	506849
QCP3640	506935
QCP3648	506325
QCP3652	506967
QCP3656	506968
QCP3657	506914
QCP3659	506980
QCP3660	506987
QCP3661	506978
QCP3662	506902
QCP3664	506866
QCP3665	506955
QCP3666	506952
QCP3667	506852
QCP3668	506905
QCP3670	506878
QCP3671	506922
QCP3672	506927
QCP3673	506950
QCP3678	506961
QCP3679	506895
QCP3683	506988
QCP3685	506964
QCP3686	506977
QCP3688	506976
QCP3690	526005
QCP3691	506965
QCP3693	506979
QCP3694	506982
QCP3699	506877
QCP3709P	506010
QCP3713	506897

QUINTON HAZELL (.../...)

IAM	Valeo
QCP3715	506993
QCP3718	526010
QCP3720	506974
QCP3722	506832
QCP3731	506823
QCP3734	526006
QCP3758	506803
QCP3795	506605
QCP4163	506582
QCP4453	506667
QCP539	506341
QCP593	506098
QCP752	506377
QCP766	506092
QCP769	506041
QCP952	506066
QCP952BH	506227
QCP957	506059
QCP963	506337
QCP965	506492
QCP969	506026
QCP972	506148
QCP977	506032
QCP985	506001
QCP986	506013
QCP990	506069
QCP991	506352
QCP995	506100
QTH100K	819845
QTH102K	819846
QTH104K	819864
QTH105K	819853
QTH107K	820290
QTH114K	819922
QTH116K	819933
QTH117K	819883
QTH118K	819935
QTH120	819881
QTH125	819887
QTH126K	819904
QTH131K	819886
QTH132K	819948
QTH134K	819837
QTH135K	819889
QTH136K	820767
QTH138K	819873
QTH143	819866
QTH144	819924
QTH165K	819863
QTH179K	819885
QTH182K	819900
QTH183K	820021
QTH203K	819848
QTH205	819923
QTH206K	819949
QTH208	820541
QTH209K	820042
QTH210K	819911
QTH213K	819894
QTH219K	819939
QTH222K	819899
QTH227K	819891
QTH229K	819838
QTH231K	819839
QTH232K	819913
QTH242K	819859
QTH250K	819959
QTH264K	819936
QTH266K	819897
QTH267K	820009
QTH269K	820008
QTH270	819927
QTH275K	819938

QUINTON HAZELL (.../...)

QTH284K	**819940**
QTH295K	**819969**
QTH313K	**819868**
QTH316K	**820051**
QTH321	**820174**
QTH322K	**819944**
QTH323K	**819876**
QTH325K	**819895**
QTH326K	**819905**
QTH328K	**820076**
QTH329K	**819867**
QTH330K	**820438**
QTH334K	**820071**
QTH337K	**819964**
QTH338K	**819960**
QTH341	**819929**
QTH344	**819921**
QTH345K	**819896**
QTH349K	**819943**
QTH350K	**819942**
QTH352	**819930**
QTH353	**820059**
QTH356K	**819966**
QTH358K	**819967**
QTH359K	**819968**
QTH366K	**820165**
QTH367	**820496**
QTH369	**820136**
QTH370	**820524**
QTH372K	**819950**
QTH373K	**819958**
QTH374K	**820471**
QTH375K	**819951**
QTH376K	**820048**
QTH378	**820072**
QTH385K	**820162**
QTH389K	**820464**
QTH390K	**820067**
QTH391K	**820066**
QTH392K	**819963**
QTH393K	**820064**
QTH394K	**819952**
QTH400K	**820010**
QTH404K	**820025**
QTH405K	**820177**
QTH406K	**819953**
QTH407K	**819956**
QTH408K	**819954**
QTH411K	**820152**
QTH412K	**820139**
QTH415	**820487**
QTH417K	**820140**
QTH418K	**820185**
QTH419K	**820141**
QTH420K	**820055**
QTH421K	**820142**
QTH423K	**819970**
QTH424	**820423**
QTH425K	**820147**
QTH426K	**820149**
QTH427K	**819957**
QTH428K	**820184**
QTH431K	**820077**
QTH433K	**820131**
QTH434K	**819903**
QTH437K	**819926**
QTH439K	**820047**
QTH442K	**820061**
QTH453K	**820151**
QTH461	**820191**
QTH468K	**820040**
QTH476K	**820156**
QTH477K	**820157**

QUINTON HAZELL (.../...)

QTH478K	**820158**
QTH480K	**820160**
QTH481K	**820168**
QTH487	**819945**
QTH488K	**820027**
QTH489K	**820430**
QTH490K	**820138**
QTH492K	**820143**
QTH493K	**820407**
QTH494K	**820155**
QTH495K	**820440**
QTH496K	**820170**
QTH497K	**820183**
QTH499	**820512**
QTH501	**820176**
QTH502K	**820431**
QTH503K	**820527**
QTH504K	**820434**
QTH505K	**820410**
QTH506K	**820401**
QTH507K	**820427**
QTH508K	**820421**
QTH509K	**820418**
QTH510K	**820425**
QTH511K	**820424**
QTH512K	**820419**
QTH513K	**820422**
QTH514K	**820435**
QTH515K	**820535**
QTH516K	**820446**
QTH519K	**820402**
QTH521K	**820447**
QTH522K	**820448**
QTH523K	**820495**
QTH524K	**820491**
QTH525K	**820492**
QTH526K	**820502**
QTH527K	**820503**
QTH528	**820511**
QTH529	**820442**
QTH532K	**820414**
QTH533K	**820462**
QTH534K	**820403**
QTH535K	**820463**
QTH536K	**820465**
QTH537K	**820466**
QTH538K	**820433**
QTH539K	**820494**
QTH540K	**820449**
QTH541K	**820467**
QTH542K	**820411**
QTH543K	**820468**
QTH544K	**820459**
QTH545K	**820451**
QTH546K	**820460**
QTH547K	**820452**
QTH548K	**820457**
QTH549K	**820453**
QTH550K	**820404**
QTH551K	**820499**
QTH554K	**820412**
QTH555K	**820518**
QTH557	**820481**
QTH558	**820432**
QTH559	**820514**
QTH560	**820513**
QTH561K	**820454**
QTH562K	**820537**
QTH563	**820793**
QTH564K	**820538**
QTH565K	**819934**
QTH566K	**820437**
QTH569K	**820504**

QUINTON HAZELL (.../...)

QTH570K	**820593**
QTH572K	**820507**
QTH573K	**820592**
QTH574	**820181**
QTH576K	**820565**
QTH578K	**820547**
QTH580	**820510**
QTH584K	**820506**
QTH587K	**820196**
QTH590K	**820797**
QTH591K	**820536**
QTH593K	**820559**
QTH594K	**820163**
QTH595K	**820594**
QTH596K	**820571**
QTH597K	**820589**
QTH598K	**820835**
QTH599K	**820591**
QTH601K	**820590**
QTH603K	**820576**
QTH604K	**820930**
QTH605K	**820800**
QTH606K	**820173**
QTH607K	**820516**
QTH608K	**820563**
QTH610K	**820989**
QTH611K	**820965**
QTH612K	**820568**
QTH613K	**820951**
QTH616K	**820836**
QTH618K	**820135**
QTH619	**820933**
QTH620	**820549**
QTH621K	**820533**
QTH622	**820553**
QTH623	**820555**
QTH625K	**820556**
QTH626K	**820557**
QTH627K	**820958**
QTH631K	**820562**
QTH632K	**820796**
QTH634	**820596**
QTH635K	**820974**
QTH636K	**820597**
QTH637K	**820598**
QTH638K	**820776**
QTH639K	**820972**
QTH641K	**820962**
QTH642K	**820935**
QTH646K	**820786**
QTH652K	**820977**
QTH653K	**820578**
QTH654K	**820983**
XEFS1	**819746**
XEFS101	**820324**
XEFS11	**819764**
XEFS120	**820232**
XEFS157	**819827**
XEFS18	**819749**
XEFS2	**819758**
XEFS200	**820210**
XEFS201	**820214**
XEFS202	**820213**
XEFS204	**820211**
XEFS205	**819783**
XEFS208	**820828**
XEFS209	**819753**
XEFS210	**819754**
XEFS211	**820038**
XEFS212	**820337**
XEFS214	**820242**
XEFS218	**820219**
XEFS220	**820227**

QUINTON HAZELL (.../...)

XEFS221	**820033**
XEFS226	**820031**
XEFS228	**820032**
XEFS231	**819752**
XEFS237	**820207**
XEFS238	**820037**
XEFS239	**820311**
XEFS242	**820034**
XEFS249	**820308**
XEFS26	**819774**
XEFS264	**820224**
XEFS270	**819756**
XEFS276	**820334**
XEFS279	**820229**
XEFS28	**820236**
XEFS283	**820309**
XEFS29	**819743**
XEFS290	**820310**
XEFS295	**820035**
XEFS31	**819772**
XEFS313	**820329**
XEFS314	**820338**
XEFS316	**820336**
XEFS321	**820317**
XEFS322	**820831**
XEFS323	**820305**
XEFS326	**820302**
XEFS331	**820316**
XEFS34	**820237**
XEFS36	**820330**
XEFS4	**819757**
XEFS40	**819773**
XEFS51	**819785**
XEFS52	**819784**
XEFS53	**820304**
XEFS54	**819769**
XEFS56	**820832**
XEFS58	**819745**
XEFS59	**819782**
XEFS62	**819830**
XEFS70	**820235**
XEFS71	**820325**
XEFS72	**820331**
XEFS78	**819829**
XEFS79	**819770**
XEFS8	**820238**
XEFS81	**819826**
XEFS82	**819771**
XEFS86	**819755**
XEFS87	**820212**
XEFS88	**820202**
XEFS92	**819786**
XEFS93	**819747**
XEFS95	**820239**
XEFS98	**820220**
XEFS99	**819781**

RUVILLE

65002	**506664**
65003	**506662**
65004	**506663**
65006	**506788**
65008	**506141**
65010	**506052**
65011	**506169**
65012	**506046**
65014	**506799**
65015	**506070**
65018	**506109**
65019	**506710**
65020	**506278**
65021	**506110**

RUVILLE (.../...)

IAM	Valeo
65023	506711
65024	506646
65025	506107
65027	506862
65028	506919
65033	506445
65035	506266
65050	506289
65053	506631
65055	506521
65056	506800
65100	506100
65103	506593
65105	506675
65107	506678
65109	506833
65111	506058
65112	506619
65113	506660
65114	506671
65115	506676
65116	506650
65117	506651
65118	506787
65119	506832
65120	506831
65121	506305
65121	506535
65123	506380
65124	506444
65125	506078
65126	506882
65128	506865
65129	506875
65134	506926
65138	506547
65139	506632
65145	506060
65149	506307
65155	506343
65160	506095
65162	506899
65164	506980
65165	506964
65167	526005
65170	506987
65175	506097
65177	506639
65188	506306
65191	506061
65192	506057
65193	506592
65199	506930
65201	506858
65204	506009
65207	506642
65208	506604
65209	506641
65212	506548
65213	506693
65214	506694
65215	506789
65216	506809
65222	506281
65222	506673
65236	506283
65240	506008
65242	506012
65243	506300
65244	506165
65248	506127
65249	506284
65250	506001

RUVILLE (.../...)

IAM	Valeo
65254	506158
65255	506000
65260	506529
65265	506301
65290	506287
65298	506472
65299	506581
65301	506346
65302	506697
65305	506089
65306	506085
65309	506703
65310	506003
65312	506483
65313	506656
65314	506601
65315	506856
65317	506839
65318	506080
65319	506785
65320	506837
65321	506728
65322	506153
65324	506866
65325	506005
65327	506087
65333	506006
65343	506308
65344	506481
65345	506657
65346	506527
65355	506084
65361	506007
65365	506310
65377	506030
65381	506838
65400	506873
65401	506786
65402	506428
65403	506701
65404	506713
65405	506240
65406	506434
65407	506388
65408	506644
65409	506699
65409	506871
65410	506066
65412	506532
65414	506877
65415	506132
65416	506790
65419	506798
65420	506013
65421	506855
65422	506700
65423	506867
65424	506726
65425	506876
65430	506667
65431	506576
65432	506872
65435	506974
65440	506190
65441	506578
65442	506577
65443	506533
65444	506256
65450	506105
65452	506336
65453	506442
65455	506282
65457	506488

RUVILLE (.../...)

IAM	Valeo
65458	506130
65466	506186
65468	506385
65469	506591
65470	506513
65471	506484
65473	506587
65475	506706
65479	506950
65500	506580
65501	506599
65501	506600
65502	506783
65503	506784
65504	506073
65505	506674
65506	506698
65509	506637
65510	506655
65512	506725
65513	506968
65514	506367
65515	506564
65516	506573
65517	506869
65520	526010
65521	506993
65522	506099
65526	506345
65527	506074
65528	506076
65533	506019
65534	506314
65535	506311
65536	506315
65537	506316
65538	506297
65541	506072
65562	506317
65565	506312
65565	506486
65566	506579
65567	506863
65568	506902
65701	506602
65703	506794
65704	506781
65706	506911
65801	506598
65802	506248
65803	506302
65804	506331
65805	506524
65805	506613
65808	506574
65809	506967
65810	506562
65811	506397
65814	506712
65815	506079
65816	506298
65818	506640
65819	506686
65820	506859
65823	506123
65824	506808
65825	506295
65828	506106
65829	506864
65831	506719
65833	506860
65835	506115
65837	506293

RUVILLE (.../...)

IAM	Valeo
65838	506063
65839	506474
65840	506143
65843	506167
65845	506695
65846	506327
65850	506294
65852	506299
65855	506304
65856	506716
65856	506983
65881	506334
65881	506379
65883	506518
65884	506563
65886	506519
65889	506516
65890	506075
65891	506134
65892	506722
65893	506144
65894	506645
65895	506597
65896	506340
65897	506584
65898	506585
65899	506586
65903	506290
65904	506029
65905	506011
65906	506720
65906	506918
65908	506247
65909	506170
65910	506714
65912	506014
65915	506088
65920	506595
65921	506531
65922	506530
65925	506914
65926	506978
65978	506292
65979	506032
65980	506117
65982	506291
65983	506514
65986	506643
65989	506715
65990	506669
65991	506670
65992	506582
65993	506596
65994	506575
65996	506952
65997	506961
66002	506036
66003	506525
66004	506559
66005	506590
66015	506861
66022	506102
66023	506479
66024	506101
66025	506286
66101	506010
66102	506018
66103	506114
66105	506320
66106	506016
66107	506842
66251	506907
66402	506528

IAM	Valeo
RUVILLE (.../...)	
66403	**506526**
66410	**506040**
66420	**506133**
66511	**506853**
66512	**506854**
66515	**506050**
66530	**506325**
66621	**506704**
66622	**506721**
66623	**506178**
66801	**506702**
66803	**506717**
66806	**506487**
66807	**506622**
66808	**506377**
66810	**506429**
66813	**506705**
66814	**506606**
66816	**506534**
66817	**506437**
66817	**506737**
66819	**506916**
66821	**506868**
66825	**506965**
66826	**506394**
66834	**506023**
66850	**506924**
66851	**506927**
66878	**506436**
66900	**506411**
66902	**506928**
66904	**506938**
66907	**506470**
66908	**506426**
66911	**506942**
66912	**506652**
66915	**506905**
66919	**506939**
66920	**506468**
66922	**506610**
66925	**506844**
66926	**506982**
66928	**506846**
66929	**506906**
66930	**506653**
66939	**506707**
66940	**506708**
66941	**506848**
66942	**506627**
66971	**506852**
66973	**506849**
66974	**506843**
66975	**506881**
66976	**506851**
66978	**506618**
67002	**506400**
67003	**506898**
67008	**506825**
67011	**506948**
67018	**506973**
67020	**506424**
67210	**506148**
67220	**506151**
67300	**506405**
67302	**506900**
67304	**506734**
67305	**506857**
67307	**506815**
67309	**506958**
67311	**506813**
67313	**506818**
67314	**506406**
67316	**506962**

IAM	Valeo
RUVILLE (.../...)	
67317	**506934**
67319	**526006**
67325	**506404**
67337	**506936**
67339	**506617**
67343	**506408**
67344	**506835**
67400	**506894**
67401	**506443**
67402	**506441**
67403	**506811**
67404	**506810**
67405	**506925**
67408	**506895**
67411	**506679**
67412	**506661**
67413	**506680**
67413	**506943**
67414	**506878**
67420	**506321**
67450	**506045**
67460	**506322**
67461	**506812**
67701	**506975**
67702	**506908**
67706	**506614**
67730	**506870**
67731	**506904**
67732	**506903**
67803	**506634**
67804	**506522**
67806	**506672**
67807	**506730**
67808	**506874**
68000	**506847**
68003	**506323**
68103	**506440**
68104	**506439**
68350	**506929**
68356	**506913**
68400	**506777**
68402	**506816**
68403	**506977**
68404	**506922**
68405	**506819**
68406	**506826**
68409	**506935**
68412	**506976**
68413	**506897**
68600	**506538**
68602	**506454**
68605	**506455**
68606	**506616**
68607	**506539**
68613	**506456**
68621	**506605**
68624	**506823**
68902	**506817**
69003	**506647**
69004	**506649**
69005	**506659**
65410G	**506227**
65474G	**506603**
65880G	**506560**
65887G	**506523**
65924G	**506955**
SALERI	
PA1000	**506468**
PA1001	**506596**
PA1002	**506488**
PA1002	**506920**

IAM	Valeo
SALERI (.../...)	
PA1008	**506443**
PA1011	**506441**
PA1016	**506689**
PA1017	**506404**
PA1022	**506836**
PA1033	**506543**
PA1034	**506625**
PA1035	**506928**
PA1036	**506653**
PA1048	**506871**
PA1048A	**506699**
PA1048A	**506872**
PA1049	**506873**
PA1050	**506877**
PA1051A	**506794**
PA1052	**506710**
PA1053	**506842**
PA1054	**506575**
PA1055	**506918**
PA1055A	**506720**
PA1057	**506783**
PA1058	**506574**
PA1059	**506777**
PA1060	**506706**
PA1069	**506792**
PA1070	**506664**
PA1071	**506662**
PA1072	**506663**
PA1073	**506659**
PA1074	**506679**
PA1075	**506661**
PA1076	**506894**
PA1078	**506818**
PA1087	**506675**
PA1091	**506857**
PA1095	**506534**
PA1097	**506779**
PA1102	**506874**
PA1112	**506610**
PA1116	**506281**
PA1116	**506673**
PA1117	**506692**
PA1118	**506285**
PA1121	**506788**
PA1128	**506784**
PA1130	**506780**
PA1131	**506674**
PA1132	**506698**
PA1133	**506325**
PA1134	**506697**
PA1135	**506693**
PA1136	**506714**
PA1138	**506694**
PA1142	**506548**
PA1146	**506401**
PA1146	**506948**
PA1147	**506627**
PA1150	**506439**
PA1152	**506847**
PA1155	**506733**
PA115P	**506341**
PA1160	**506707**
PA1161	**506848**
PA1162	**506708**
PA1193	**506734**
PA1195	**506835**
PA1199	**506898**
PA1206	**506903**
PA1211	**506608**
PA1212	**506844**
PA1213	**506691**
PA1215	**506536**
PA1216	**506703**

IAM	Valeo
SALERI (.../...)	
PA1217	**506785**
PA1218	**506712**
PA1219	**506732**
PA1221	**506311**
PA1223	**506456**
PA1224	**506709**
PA1225	**506882**
PA1227	**506800**
PA1230	**506726**
PA1232	**506798**
PA1233	**506855**
PA1234	**506704**
PA1235	**506719**
PA1236	**506643**
PA1237	**506716**
PA1242	**506618**
PA1244	**506833**
PA1246	**506808**
PA1251	**506839**
PA1252	**506715**
PA1253	**506809**
PA1255	**506865**
PA1259	**506837**
PA1260	**506864**
PA1262	**506781**
PA1264	**506831**
PA1265	**506930**
PA1266	**506721**
PA1269	**506838**
PA1270A	**506790**
PA1271	**506867**
PA1272	**506907**
PA1274	**506725**
PA1275	**506728**
PA1278	**506926**
PA1282	**506854**
PA1284	**506875**
PA1289	**506730**
PA1290	**506911**
PA1294	**506711**
PA1295	**506919**
PA1299	**506644**
PA1302	**506680**
PA1302	**506943**
PA1303	**506811**
PA1304	**506812**
PA1306	**506819**
PA1307	**506814**
PA1308	**506816**
PA1313	**506900**
PA1316	**506815**
PA1317	**506633**
PA1318	**506908**
PA1320	**506904**
PA1321	**506843**
PA1329	**506717**
PA1330	**506702**
PA1331	**506705**
PA1333	**506810**
PA1333	**506925**
PA1336	**506817**
PA1342	**506958**
PA1347	**506975**
PA1348	**506851**
PA1351	**506825**
PA1354	**506700**
PA1355A	**506701**
PA1356	**506826**
PA1359	**506682**
PA1360	**506538**
PA1370	**506598**
PA1371	**506852**
PA1373	**506876**

SALERI (.../...)

IAM	Valeo
PA1385	506967
PA1386	506987
PA1387	506964
PA1390	506899
PA1393	506983
PA1394	506955
PA1395	506863
PA1396	506902
PA1397	506952
PA1400	506961
PA1402	506866
PA1403	506962
PA1404	506968
PA1412	506980
PA1425	506914
PA1426	506978
PA1428	506935
PA1430	506927
PA1439	506906
PA1440	506849
PA1441	506905
PA1442	506514
PA1445	506950
PA1454	506922
PA1455	506974
PA1459	506897
PA1469	506916
PA1470	506626
PA1473	506993
PA1482	506878
PA1483	506446
PA1485	506605
PA1486	506454
PA1489	506829
PA1495	526010
PA1505	506895
PA1510	506982
PA1514	526006
PA1516	506976
PA1517	506977
PA1518	506965
PA201	506010
PA206P	506079
PA208	506041
PA215	506009
PA224	506108
PA228	506492
PA231	506148
PA234P	506075
PA235S	506173
PA236	506066
PA238	506100
PA249	506069
PA251	506352
PA252	506098
PA259	506032
PA264	506091
PA275	506001
PA278P	506013
PA280	506059
PA281	506413
PA288S	506063
PA307	506245
PA308	506412
PA312	506411
PA320	506410
PA321	506186
PA355	506031
PA356	506106
PA358P	506006
PA360P	506860
PA361	506122
PA364	506073

SALERI (.../...)

IAM	Valeo
PA364	506473
PA373	506858
PA377P	506190
PA378	506048
PA380P	506105
PA380P	506130
PA381	506247
PA382	506141
PA384	506508
PA386	506249
PA387	506070
PA390	506416
PA394P	506337
PA397	506074
PA398P	506000
PA399	506033
PA411P	506089
PA412	506097
PA413	506076
PA414	506274
PA416	506230
PA419	506170
PA423P	506327
PA427P	506003
PA429P	506011
PA431	506052
PA432	506023
PA433	506383
PA437P	506007
PA443	506016
PA445P	506178
PA447	506095
PA453	506861
PA456	506424
PA459	506165
PA460	506667
PA461	506043
PA465	506078
PA466P	506058
PA467A	506397
PA469	506040
PA470	506248
PA471P	506004
PA472	506134
PA483	506088
PA484P	506256
PA487P	506143
PA488P	506008
PA493	506060
PA495	506155
PA497	506072
PA499	506331
PA503	506330
PA507	506167
PA510	506428
PA511P	506035
PA512P	506005
PA513P	506014
PA515P	506028
PA517	506425
PA518P	506151
PA519	506227
PA524P	506087
PA525P	506268
PA526	506158
PA527P	506030
PA528P	506119
PA547	506559
PA552P	506560
PA557A	506019
PA561	506639
PA562	506169
PA563	506086

SALERI (.../...)

IAM	Valeo
PA564	506101
PA570	506562
PA571	506278
PA573	506434
PA573	506713
PA575P	506084
PA583	506102
PA584	506292
PA589P	506240
PA590P	506529
PA591	506859
PA595	506343
PA599	506012
PA601	506619
PA604	506037
PA607	506144
PA609	506429
PA610	506061
PA611A	506099
PA613P	506685
PA615	506133
PA616	506266
PA618	506057
PA619P	506132
PA624P	506080
PA631	506115
PA636	506345
PA638P	506561
PA645P	506367
PA646	506046
PA647	506444
PA648P	506029
PA649P	506117
PA650	506528
PA653	506047
PA655P	506282
PA656	506085
PA658	506109
PA659	506107
PA660	506110
PA663P	506388
PA664P	506336
PA665P	506442
PA667	506127
PA668	506642
PA669	506284
PA670P	506291
PA671	506380
PA675	506153
PA675	506482
PA681P	506045
PA682P	506018
PA683P	506114
PA683P	506696
PA684	506438
PA685	506437
PA686	506479
PA687	506286
PA688	506123
PA690	506293
PA693P	506294
PA694	506340
PA703P	506295
PA705	506036
PA706	506296
PA707P	506308
PA708A	506309
PA708A	506856
PA709P	506310
PA710	506335
PA712	506283
PA713	506317
PA714	506289

SALERI (.../...)

IAM	Valeo
PA715	506306
PA716	506305
PA717	506368
PA719P	506299
PA720P	506290
PA721P	506312
PA722P	506600
PA724P	506287
PA725	506300
PA727P	506572
PA729	506445
PA731P	506334
PA732P	506379
PA738P	506322
PA739P	506516
PA745	506297
PA746	506399
PA748	506307
PA749	506436
PA750	506394
PA751	506320
PA752	506314
PA753	506315
PA754	506316
PA758	506323
PA762A	506517
PA764	506298
PA766	506474
PA773	506880
PA774	506400
PA775	506406
PA776	506778
PA778	506405
PA779	506407
PA782	506617
PA786	506440
PA788	506923
PA789	506565
PA791	506423
PA795	506938
PA796	506426
PA797	506624
PA801	506568
PA802	506614
PA806	506346
PA806	506929
PA807	506408
PA809	506377
PA812	506606
PA814	506870
PA816	506486
PA817	506599
PA820	506846
PA821	506470
PA822	506652
PA822	506942
PA825	506523
PA827	506563
PA828	506513
PA829	506603
PA830	506573
PA831	506564
PA834	506584
PA837	506547
PA839	506535
PA844	506304
PA845	506302
PA846	506385
PA847	506484
PA848	506472
PA850	506025
PA852	506597
PA853	506695

SALERI (.../...)

IAM	Valeo
PA854	506524
PA854	506613
PA856	506670
PA858	506669
PA860	506525
PA861	506518
PA864A	506532
PA867	506587
PA868	506521
PA869	506582
PA871	506648
PA873	506645
PA877	506301
PA879	506581
PA880	506579
PA881	506526
PA883	506591
PA884	506592
PA885	506530
PA886	506531
PA887	506527
PA888	506869
PA890	506481
PA891	506657
PA892	506936
PA902	506782
PA907	506540
PA908	506321
PA909	506487
PA913	506686
PA915	506631
PA918	506628
PA919	506586
PA920	506585
PA921	506622
PA922	506590
PA924	506602
PA925	506799
PA926	506862
PA928	506649
PA931	506593
PA931	506678
PA932	506660
PA933A	506832
PA934A	506787
PA935	506601
PA936	506656
PA937	506483
PA938	506595
PA939A	506580
PA939A	506729
PA941	506577
PA942	506634
PA943	506522
PA944	506533
PA945	506576
PA946	506578
PA947	506722
PA948	506737
PA949	506641
PA950	506604
PA951	506671
PA952	506676
PA953	506650
PA954	506632
PA957	506647
PA965	506646
PA967	506651
PA969	506637
PA970	506655
PA972	506672
PA980	506853
PA982	506786

SALERI (.../...)

IAM	Valeo
PA983A	506640
PA984	506357
PA994	506736

SASIC

IAM	Valeo
2001208	506178
2011351	506170
2011391	506011
2011401	506292
2011421	506088
2011481	506014
2011501	506029
2011521	506117
2011551	506291
2011581	506290
2011931	506530
2011951	506669
2011961	506670
2011981	506531
2021671	506108
2021711	506245
2021851	506247
2021871	506230
2021921	506274
2021971	506122
3600001	506852
3600004	506914
3600005	506952
3600006	506955
3604001	506863
3604006	506902
3604008	506968
3606001	506864
3606002	506523
3606003	506893
3606004	506812
3606009	506899
3606010	506831
3606011	506926
3606012	506787
3606013	506838
3606014	506837
3606015	506808
3606017	506706
3606018	506730
3606021	506851
3606023	506843
3606024	506867
3606027	506839
3606028	506967
3606033	506663
3606036	506659
3606038	506975
3606042	506878
3606045	506922
3606047	506976
3606055	506950
3606056	506849
3606057	506905
3606058	506817
3606061	506777
3606062	506897
3606067	506716
3606067	506983
3606071	506809
4001175	506698
4001176	506709
4001178	506347
4001179	506367
4001182	506019
4001183	506314
4001184	506315

SASIC (.../...)

IAM	Valeo
4001185	506316
4001186	506317
4001187	506311
4001188	506312
4001188	506486
4001189	506573
4001190	506564
4001192	506580
4001192	506729
4001193	506579
4001194	506637
4001195	506655
4001196	506599
4001196	506600
4001198	506325
4001199	506869
4001209	506059
4001212	506341
4001213	506337
4001220	506022
4001223	506076
4001225	506783
4001226	506780
4001227	506784
4001229	506725
4001235	506073
4001236	506074
4001237	506043
4001238	506072
4001239	506106
4001240	506330
4001242	506473
4001244	506086
4001245	506099
4001248	506297
4001249	506345
6001217	506032
9000806	506907
9000823	506640
9000824	506712
9000834	506604
9000835	506641
9000836	506693
9000837	506789
9000841	506534
9000842	506702
9000843	506785
9000894	506844
9000902	506722
9000903	506559
9000905	506589
9000912	506790
9000913	506533
9000914	506532
9000916	506700
9000917	506701
9000918	506786
9000919	506855
9000922	506646
9000923	506711
9000924	506872
9000926	506686
9000927	506695
9000928	506597
9000929	506518
9000931	506563
9000938	506598
9000939	506334
9000939	506379
9000941	506524
9000941	506613
9000942	506519
9000947	506585

SASIC (.../...)

IAM	Valeo
9000949	506586
9000951	506514
9000952	506063
9000962	506284
9000963	506047
9000964	506300
9000965	506472
9000966	506581
9000967	506634
9000969	506672
9000971	506717
9000972	506321
9000973	506320
9000974	506661
9000975	506679
9000977	506694
9000978	506875
9000981	506865
9000983	506708
9000985	506705
9000987	506697
9000989	506651
9000991	506650
9000995	506307
9000996	506676
9000997	506306
9000998	506671
9001000	506577
9001002	506010
9001004	506018
9001005	506045
9001008	506323
9001010	506114
9001016	506052
9001018	506079
9001019	506397
9001020	506141
9001022	506278
9001024	506860
9001049	506001
9001053	506000
9001055	506036
9001056	506327
9001060	506167
9001063	506143
9001064	506590
9001073	506639
9001075	506060
9001076	506256
9001077	506006
9001092	506066
9001093	506013
9001094	506105
9001095	506190
9001096	506667
9001105	506134
9001109	506858
9001110	506165
9001112	506008
9001118	506031
9001127	506007
9001129	506005
9001133	506084
9001134	506003
9001146	506078
9001147	506100
9001158	506046
9001159	506169
9001165	506144
9001169	506119
9001169	506386
9001170	506148
9001180	506087

SASIC (.../...)

9001183	**506030**
9001190	**506266**
9001195	**506075**
9001197	**506092**
9001208	**506343**
9001209	**506080**
9001210	**506482**
9001212	**506085**
9001215	**506340**
9001216	**506294**
9001217	**506295**
9001218	**506127**
9001223	**506560**
9001228	**506012**
9001229	**506529**
9001232	**506281**
9001232	**506673**
9001234	**506240**
9001235	**506282**
9001236	**506107**
9001237	**506023**
9001245	**506109**
9001246	**506110**
9001247	**506289**
9001250	**506562**
9001253	**506298**
9001256	**506299**
9001257	**506287**
9001259	**506642**
9001260	**506301**
9001266	**506848**
9001267	**506707**
9001269	**506308**
9001270	**506601**
9001272	**506309**
9001273	**506310**
9001274	**506153**
9001276	**506656**
9001277	**506657**
9001279	**506483**
9001280	**506388**
9001283	**506513**
9001284	**506385**
9001286	**506873**
9001288	**506920**
9001289	**506703**
9001290	**506286**
9001292	**506871**
9001293	**506874**
9001295	**506622**
9001300	**506737**
9001303	**506394**
9001305	**506713**
9001306	**506434**
9001307	**506576**
9001308	**506578**
2,011E+84	**506719**
2011A21	**506595**
2011A31	**506582**
2011A51	**506596**
2011A61	**506643**
2011A81	**506574**
2011C41	**506575**
2011F91	**506714**
2011G01	**506704**
2011G21	**506721**
2011G91	**506715**

SKF

VKPA 83650	**506918**
VKPA 86200	**506341**
VKPA81400	**506227**

SKF (.../...)

VKPA81402	**506594**
VKPA81402	**506603**
VKPA81410	**506667**
VKPA82202	**506079**
VKPA82203	**506294**
VKPA82210	**506562**
VKPA82218	**506572**
VKPA82220	**506268**
VKPA82222	**506075**
VKPA82240	**506563**
VKPA82248	**506645**
VKPA82428	**506144**
VKPA82429	**506559**
VKPA82440	**506340**
VKPA82441	**506523**
VKPA82618	**506560**
VKPA82618	**506722**
VKPA82634	**506293**
VKPA82648	**506295**
VKPA82653	**506298**
VKPA82666	**506723**
VKPA82670	**506584**
VKPA82671	**506585**
VKPA83432	**506670**
VKPA84623	**506789**
VKPA84700	**506955**
VKPA85300	**506697**
VKPA85605	**506346**
VKPA85605	**506929**
VKPA85608	**506089**
VKPA86206	**506022**
VKPA86206	**506347**
VKPA86206	**506620**
VKPA86212	**506486**
VKPA86217	**506599**
VKPA88640	**506919**
VKPA91615	**506627**
VKPA95003	**506935**
VKPC 81310	**506911**
VKPC 81609	**506713**
VKPC 82230	**506379**
VKPC 82410	**506860**
VKPC 82621	**506861**
VKPC 91810	**506852**
VKPC81200	**506013**
VKPC81200	**506666**
VKPC81204	**506282**
VKPC81205	**506876**
VKPC81206	**506240**
VKPC81210	**506385**
VKPC81211	**506798**
VKPC81215	**506577**
VKPC81216	**506786**
VKPC81217	**506730**
VKPC81220	**506790**
VKPC81269	**506974**
VKPC81301	**506855**
VKPC81302	**506701**
VKPC81307	**506950**
VKPC81400	**506066**
VKPC81405	**506634**
VKPC81406	**506522**
VKPC81407	**506576**
VKPC81411	**506578**
VKPC81412	**506672**
VKPC81416	**506874**
VKPC81417	**506873**
VKPC81418	**506700**
VKPC81419	**506706**
VKPC81420	**506726**
VKPC81601	**506186**
VKPC81602	**506105**
VKPC81603	**506130**

SKF (.../...)

VKPC81605	**506190**
VKPC81606	**506132**
VKPC81607	**506428**
VKPC81609	**506434**
VKPC81611	**506484**
VKPC81612	**506336**
VKPC81615	**506513**
VKPC81620	**506532**
VKPC81622	**506587**
VKPC81623	**506533**
VKPC81624	**506592**
VKPC81625	**506591**
VKPC81626	**506871**
VKPC81626	**506872**
VKPC81627	**506699**
VKPC81800	**506442**
VKPC81802	**506517**
VKPC81803	**506388**
VKPC81806	**506644**
VKPC81807	**506602**
VKPC81811	**506792**
VKPC82100	**506967**
VKPC82201	**506036**
VKPC82206	**506092**
VKPC82208	**506063**
VKPC82214	**506397**
VKPC82216	**506508**
VKPC82218	**506143**
VKPC82224	**506386**
VKPC82230	**506334**
VKPC82245	**506299**
VKPC82246	**506613**
VKPC82247	**506597**
VKPC82249	**506598**
VKPC82250	**506640**
VKPC82251	**506686**
VKPC82300	**506983**
VKPC82390	**506864**
VKPC82412	**506098**
VKPC82419	**506256**
VKPC82424	**506167**
VKPC82432	**506115**
VKPC82450	**506519**
VKPC82451	**506525**
VKPC82541	**506479**
VKPC82606	**506248**
VKPC82614	**506134**
VKPC82620	**506561**
VKPC82630	**506106**
VKPC82638	**506297**
VKPC82642	**506281**
VKPC82642	**506589**
VKPC82642	**506673**
VKPC82643	**506474**
VKPC82645	**506518**
VKPC82646	**506516**
VKPC82647	**506296**
VKPC82651	**506304**
VKPC82652	**506514**
VKPC82660	**506335**
VKPC82665	**506590**
VKPC82667	**506808**
VKPC82800	**506101**
VKPC83140	**506714**
VKPC83205	**506035**
VKPC83206	**506032**
VKPC83258	**506721**
VKPC83259	**506715**
VKPC83261	**506952**
VKPC83401	**506011**
VKPC83420	**506117**
VKPC83420	**506574**
VKPC83423	**506170**

SKF (.../...)

VKPC83424	**506014**
VKPC83425	**506291**
VKPC83428	**506290**
VKPC83430	**506595**
VKPC83604	**506088**
VKPC83605	**506230**
VKPC83612	**506245**
VKPC83615	**506029**
VKPC83616	**506247**
VKPC83617	**506178**
VKPC83618	**506122**
VKPC83630	**506292**
VKPC83635	**506531**
VKPC83636	**506530**
VKPC83637	**506643**
VKPC83639	**506575**
VKPC83640	**506720**
VKPC83643	**506719**
VKPC83644	**506704**
VKPC83646	**506978**
VKPC83810	**506582**
VKPC83811	**506596**
VKPC84205	**506001**
VKPC84207	**506000**
VKPC84208	**506008**
VKPC84209	**506012**
VKPC84210	**506127**
VKPC84215	**506472**
VKPC84216	**506581**
VKPC84217	**506893**
VKPC84403	**506165**
VKPC84406	**506284**
VKPC84407	**506283**
VKPC84408	**506287**
VKPC84409	**506301**
VKPC84410	**506642**
VKPC84411	**506047**
VKPC84412	**506300**
VKPC84415	**506604**
VKPC84416	**506641**
VKPC84600	**506009**
VKPC84609	**506158**
VKPC84611	**506040**
VKPC84612	**506133**
VKPC84613	**506528**
VKPC84618	**506155**
VKPC84620	**506529**
VKPC84621	**506693**
VKPC84622	**506694**
VKPC84629	**506809**
VKPC85201	**506031**
VKPC85202	**506006**
VKPC85206	**506007**
VKPC85211	**506703**
VKPC85212	**506308**
VKPC85220	**506601**
VKPC85302	**506783**
VKPC85303	**506784**
VKPC85304	**506698**
VKPC85308	**506839**
VKPC85312	**506837**
VKPC85400	**506003**
VKPC85401	**506030**
VKPC85403	**506085**
VKPC85404	**506153**
VKPC85407	**506005**
VKPC85408	**506087**
VKPC85409	**506310**
VKPC85410	**506482**
VKPC85460	**506785**
VKPC85600	**506048**
VKPC85603	**506084**
VKPC85610	**506080**

IAM ⇨ Valeo	
SKF (.../...)	
VKPC85611	**506309**
VKPC85611	**506856**
VKPC85613	**506527**
VKPC85620	**506481**
VKPC85622	**506483**
VKPC85623	**506657**
VKPC85624	**506656**
VKPC85700	**506716**
VKPC86008	**526010**
VKPC86129	**506725**
VKPC86201	**506059**
VKPC86202	**506337**
VKPC86205	**506473**
VKPC86212	**506312**
VKPC86215	**506580**
VKPC86215	**506729**
VKPC86216	**506564**
VKPC86217	**506600**
VKPC86305	**506709**
VKPC86402	**506043**
VKPC86405	**506073**
VKPC86408	**506086**
VKPC86409	**506099**
VKPC86413	**506019**
VKPC86415	**506573**
VKPC86416	**506655**
VKPC86417	**506674**
VKPC86418	**506863**
VKPC86419	**506993**
VKPC86450	**506728**
VKPC86500	**506835**
VKPC86520	**506853**
VKPC86602	**506076**
VKPC86603	**506072**
VKPC86604	**506345**
VKPC86605	**506311**
VKPC86606	**506314**
VKPC86609	**506044**
VKPC86610	**506026**
VKPC86614	**506050**
VKPC86615	**506315**
VKPC86616	**506316**
VKPC86618	**506325**
VKPC86619	**506488**
VKPC86619	**506920**
VKPC86621	**506317**
VKPC86622	**506330**
VKPC86623	**506074**
VKPC86630	**506526**
VKPC86631	**506579**
VKPC86633	**506637**
VKPC86635	**506854**
VKPC86810	**506780**
VKPC86811	**506902**
VKPC87200	**506010**
VKPC87205	**506016**
VKPC87400	**506018**
VKPC87401	**506114**
VKPC87403	**506004**
VKPC87404	**506045**
VKPC87410	**506842**
VKPC87610	**506540**
VKPC87813	**506320**
VKPC87835	**506323**
VKPC87835	**506829**
VKPC87850	**506732**
VKPC88200	**506148**
VKPC88203	**506151**
VKPC88206	**506593**
VKPC88430	**506663**
VKPC88604	**506095**
VKPC88605	**506141**
VKPC88607	**506169**

IAM ⇨ Valeo	
SKF (.../...)	
VKPC88608	**506078**
VKPC88609	**506069**
VKPC88610	**506052**
VKPC88611	**506046**
VKPC88612	**506266**
VKPC88614	**506278**
VKPC88615	**506109**
VKPC88616	**506110**
VKPC88617	**506107**
VKPC88619	**506639**
VKPC88620	**506060**
VKPC88622	**506306**
VKPC88625	**506307**
VKPC88631	**506660**
VKPC88632	**506646**
VKPC88635	**506710**
VKPC88636	**506711**
VKPC88637	**506662**
VKPC88802	**506249**
VKPC88804	**506057**
VKPC88807	**506100**
VKPC88809	**506343**
VKPC88810	**506061**
VKPC88813	**506097**
VKPC88816	**506380**
VKPC88818	**506058**
VKPC88824	**506305**
VKPC88825	**506628**
VKPC88826	**506289**
VKPC88827	**506619**
VKPC88828	**506547**
VKPC88829	**506521**
VKPC88830	**506631**
VKPC88831	**506445**
VKPC88832	**506800**
VKPC88836	**506535**
VKPC88842	**506671**
VKPC88843	**506676**
VKPC88844	**506650**
VKPC88845	**506651**
VKPC88846	**506787**
VKPC88848	**506677**
VKPC88850	**506875**
VKPC88851	**506678**
VKPC88852	**506833**
VKPC88853	**506865**
VKPC88854	**506882**
VKPC88855	**506831**
VKPC88860	**506899**
VKPC88862	**526005**
VKPC88863	**506930**
VKPC88864	**506926**
VKPC88865	**506987**
VKPC88866	**506964**
VKPC88867	**506980**
VKPC88907	**506538**
VKPC88910	**506803**
VKPC90200	**506648**
VKPC90202	**506647**
VKPC90402	**506649**
VKPC90450	**506659**
VKPC91402	**506410**
VKPC91409	**506426**
VKPC91414	**506939**
VKPC91416	**506942**
VKPC91417	**506610**
VKPC91607	**506846**
VKPC91613	**506624**
VKPC91804	**506470**
VKPC91805	**506707**
VKPC91806	**506848**
VKPC91807	**506708**
VKPC91808	**506844**

IAM ⇨ Valeo	
SKF (.../...)	
VKPC91809	**506907**
VKPC91813	**506843**
VKPC91814	**506851**
VKPC91817	**506905**
VKPC91825	**506982**
VKPC92203	**506416**
VKPC92205	**506023**
VKPC92208	**506368**
VKPC92209	**506622**
VKPC92404	**506037**
VKPC92406	**506436**
VKPC92408	**506438**
VKPC92412	**506437**
VKPC92600	**506357**
VKPC92601	**506429**
VKPC92645	**506836**
VKPC92651	**506782**
VKPC92800	**506360**
VKPC92810	**506394**
VKPC92820	**506779**
VKPC92823	**506606**
VKPC92926	**506534**
VKPC92928	**506737**
VKPC92929	**506733**
VKPC92941	**506868**
VKPC92944	**506965**
VKPC93000	**506661**
VKPC93205	**506028**
VKPC93213	**506679**
VKPC93411	**506441**
VKPC93415	**506680**
VKPC93601	**506321**
VKPC93603	**506812**
VKPC93604	**506810**
VKPC93609	**506878**
VKPC94002	**506399**
VKPC94202	**506424**
VKPC94423	**506685**
VKPC94424	**506400**
VKPC94434	**506401**
VKPC94452	**506880**
VKPC94602	**506544**
VKPC94603	**506548**
VKPC94612	**506626**
VKPC94614	**506898**
VKPC94617	**506948**
VKPC94624	**506973**
VKPC94629	**506976**
VKPC94633	**506817**
VKPC95007	**506777**
VKPC95008	**506406**
VKPC95010	**506404**
VKPC95405	**506778**
VKPC95422	**506405**
VKPC95424	**506617**
VKPC95602	**506689**
VKPC95611	**506407**
VKPC95612	**506936**
VKPC95614	**506857**
VKPC95800	**506736**
VKPC95850	**506816**
VKPC95852	**506818**
VKPC95853	**506814**
VKPC95854	**506826**
VKPC-95857	**506813**
VKPC95858	**506922**
VKPC95860	**506962**
VKPC95863	**506900**
VKPC95864	**506956**
VKPC95872	**506977**
VKPC95879	**506958**
VKPC96001	**506908**
VKPC96204	**506870**

IAM ⇨ Valeo	
SKF (.../...)	
VKPC96210	**506568**
VKPC96402	**506614**
VKPC96403	**506903**
VKPC96404	**506975**
VKPC96411	**506565**
VKPC97200	**506391**
VKPC97201	**506390**
VKPC99407	**506440**
VERNET	
096386J	**819838**
118383J	**819839**
118386J	**819840**
118387J	**819841**
124880J	**819842**
129082J	**819845**
129088J	**819846**
129092J	**820290**
133580J	**820525**
133587J	**819847**
133592J	**819848**
137880J	**819849**
137883J	**819850**
137888J	**819851**
140083J	**819852**
140090J	**820040**
141087J	**819853**
141092J	**819854**
141372	**819855**
141475	**819856**
141575J	**819859**
141789J	**819862**
141883J	**819863**
141982J	**819864**
141988J	**819865**
142782J	**819866**
142788J	**820077**
143980J	**819867**
143987J	**819868**
143992J	**819869**
144175J	**819870**
147679J	**819872**
147687J	**819873**
147782J	**819874**
147787J	**819875**
150372	**819876**
150378	**819877**
150380	**819878**
150384	**819879**
150883J	**819881**
151380J	**820520**
151481J	**819882**
151488J	**819883**
151581J	**819884**
151982	**819885**
152287	**819886**
152880	**819887**
152989J	**819889**
153388J	**819891**
153587J	**820063**
153592J	**819894**
153882J	**819895**
153888J	**819896**
154282J	**820021**
154289J	**819897**
154788J	**819898**
245F79	**819837**
2577	**700011**
262075J	**819899**
262082J	**819900**
2647	**820241**
2674	**820305**

VERNET (.../...)

IAM	Valeo
2774	820334
2775	820335
2778	820336
330979J	819903
331080	819904
331988J	820134
332781J	819905
332882	820438
332885J	820509
332888	820042
335782	819911
335987J	819912
335987J	820791
372080	819913
404686J	819915
416878J	819916
449575	819921
449583	819922
449586	819923
449589	819924
456192J	819926
460880	820541
460888	819927
464085J	819929
478078J	819930
485688J	819933
485692	820526
488583	820471
488589J	819934
489887J	820262
489892J	819935
494589J	819936
494781J	819937
494989J	820043
506987J	819938
507085	819939
507185J	819940
507582	819942
507582	820044
507588	819943
507678	820544
507682	820044
507688	820544
507782	819944
507788	820542
507976	820524
507982	819945
508383J	820010
510883J	819946
511180J	819948
511188J	819949
513083J	819950
515184J	820132
522983J	819951
523183J	819952
528491J	820009
530984	819953
531385	819954
535383J	819955
541384	819956
543476J	820135
543482JBVD	820136
543488J	820519
544683J	820047
549389	820048
550485	820975
550488J	820049
568780J	819963
568880J	819964
569980J	819969
569985J	819970
575088J	820051
575092J	820547

VERNET (.../...)

IAM	Valeo
575384J	820548
575789	820534
579276	820942
589876J	820023
590287J	820027
595278	820053
595282	820054
595386	820055
595588	820056
596282	820057
596288	820058
596380	820059
596483	820060
596687	820061
596887J	820063
597182	819966
597188	819967
597380J	820064
597387J	820065
597580J	820066
597680J	820067
597788J	820068
597792	820478
597882	820069
597982	820070
597992J	820071
598088J	820072
598189	820074
600788	820137
604589J	820008
604789J	820025
606382	820073
607087J	819959
607385J	819958
612689	820138
617192J	820139
619189J	820430
622287J	820437
622292J	820140
623782	820258
623792J	820141
624292J	820142
624392J	820143
624688	820480
624787J	820147
624887	820148
624992J	820149
625087J	820150
625192	820151
625282	820506
625285	820152
625380J	820153
625480	820407
625580J	820155
625675	820156
625875	820157
625975	820158
626180J	820159
626287	820160
626380J	820161
626487J	820162
626587J	820163
626778J	820165
626782	820933
626784	820933
626788J	820549
627387	820168
627487J	820962
627578J	820440
627584J	820170
627687J	820171
628495J	820183
628587J	820184

VERNET (.../...)

IAM	Valeo
628692J	820185
628782J	820050
628792J	819968
629288	820191
629382J	820192
629482J	820193
629576	820194
629582	820512
629585J	820552
629588	820533
629678	820195
629778	820196
629782J	820553
631082	820172
631088	820439
631182	820173
631288	820174
631476	820181
631482	820176
631892J	820177
631982	820476
631985J	820555
631988	820178
632089	820179
633289J	820431
643482J	820245
645483J	820556
645489J	820527
646383	819957
648476	820515
648482J	820510
648889J	820434
648988J	820410
649083J	820401
6493105J	820427
649488J	820421
6495105J	820418
6496105J	820425
649770	820426
649785	820423
649795	820424
649895J	820419
649997J	820422
650182	820500
650187J	820435
650192	820501
650288	820535
650488J	820446
650688J	820402
650888J	820447
650988J	820448
651074	820485
651082	820486
651088	820488
651287	820184
651387J	820495
651487J	820491
651587J	820492
651692J	820507
651792J	820502
651892J	820503
651992J	820504
652082J	820511
652582	820442
652588	820443
652688	820475
652982J	820557
652987	820415
653380	820958
653392	820414
653680J	820462
653780J	820403
653880J	820463

VERNET (.../...)

IAM	Valeo
653980J	820465
654182J	820466
654187J	820433
654380J	820494
654788J	820449
654888	820467
655080J	820472
655188J	820411
655288	820468
655380J	820464
655480J	820459
655575J	820451
655680J	820460
655788J	820452
655983J	820461
656080J	820473
656182J	820457
656282J	820453
656587J	820474
656883J	820404
657080	820499
657488J	820406
657588	820412
657688J	820518
657782J	820496
658088	820481
658182	820432
658376	820514
658382	820513
658582	820545
658782	820516
659088J	820454
659887	819960
659978	820076
662889	820536
666689J	820537
670870	820444
672280J	820538
673187	820539
675684	820976
678287J	820559
6808103	820977
682488	820926
682588J	820561
682688J	820562
683388	820586
683488	820587
683588J	820563
683688	820588
683774J	820564
683782J	820565
683988	820978
6842100J	820567
684391J	820568
684588	820589
684787J	820589
684792J	820571
685392	820590
685492	820591
685592	820592
685692	820593
685792	820594
685988	820595
686082	820596
6864105J	820576
686590	820974
6873105	820930
687583	820951
687680	820597
687788J	820577
688092	820955
688288J	820578
688492	820598

VERNET (.../...)

692389	**820179**
693998	**820989**
695192	**820972**
696290	**820941**
696687	**820983**
696990	**820970**
6975100	**820959**
697888	**820965**
698188	**820934**
698600	**820935**
698688	**820935**
699187	**820940**
705082	**820990**
705088	**820963**
B1090	**820030**
B1105	**819743**
B1110	**820031**
B1273	**820038**
B1292R	**819745**
B1322	**819746**
B1371	**820032**
B1436	**820033**
B1492	**820034**
B1492	**820302**
B1531	**819748**
B1556	**819747**
B1577	**820035**
B1577	**820831**
B1619	**819749**
B1627	**819751**
B1676	**820036**
B1714	**819753**
B1769	**819754**
B1771	**820037**
B1772	**819755**
B1773	**819756**
B1861	**819762**
B1863	**819764**
B1864	**819765**
B1865	**819766**
B1866	**819767**
B1867	**819825**
B1868	**819768**
B1886	**819770**
B1887	**819771**
B1890	**819781**
B1899	**819774**
B1899	**820315**
B1900	**819775**
B1946	**820202**
B1951	**819784**
B1952	**819785**
B1953	**819786**
B1954	**819826**
B1955	**819827**
B1956	**819828**
B1957	**819829**
B1958	**819830**
B1959	**819782**
B1960	**819783**
B2442	**820301**
B2601	**820259**
B2605	**820205**
B2606	**820206**
B2607	**820207**
B2610	**820210**
B2611	**820211**
B2612	**820212**
B2616	**820214**
B2617	**820215**
B2621	**820219**
B2623	**820220**
B2625	**820222**

VERNET (.../...)

B2629	**820224**
B2630	**820225**
B2632	**820227**
B2634	**820229**
B2638	**820232**
B2639	**820233**
B2641	**820235**
B2642	**820236**
B2643	**820237**
B2644	**820238**
B2645	**820239**
B2646	**820240**
B2648	**820242**
B2671	**820302**
B2672	**820303**
B2673	**820304**
B2676	**820307**
B2678	**820308**
B2679	**820309**
B2680	**820310**
B2681	**820311**
B2684	**820331**
B2685	**820325**
B2686	**820326**
B2689	**820332**
B2690	**820312**
B2691	**820329**
B2699	**820314**
B2700	**820315**
B2704	**820316**
B2705	**820317**
B2707	**820318**
B2708	**820319**
B2709	**820330**
B2711	**820333**
B2728	**820324**
B2786	**820338**
B2855	**820337**
B6840	**819757**
B6993	**819758**
B6994	**819759**
B6995	**819760**
B6996	**819761**
D1695876	**820546**
D174382	**820131**
V1151	**819744**
V1628	**819752**
V1874	**819769**
V1888	**819772**
V1889	**819773**
V2608	**820208**

WAHLER

300083	**819845**
300083	**819851**
300083	**820057**
300083	**820176**
300090	**820058**
300482	**819966**
300488	**819846**
300488	**819967**
300488	**820049**
300492D1	**820290**
301787	**819853**
301787D2	**820262**
301787D2	**820594**
301787D50	**820592**
301792D2	**819935**
301792D50	**819854**
301792D50	**820594**
302188D50	**819853**
302188D50	**819854**

WAHLER (.../...)

302188D50	**820134**
302192D50	**819854**
302287D	**819886**
302287D	**819959**
302972	**819921**
302983	**819922**
302986	**819862**
302986	**819923**
302989	**819924**
303280	**820541**
303288	**819927**
303384	**819838**
304480	**820438**
304687	**819866**
305372	**819856**
305372	**819876**
305378	**819877**
305378	**819878**
305385	**819879**
305487D50	**819851**
306182	**819900**
306188	**819899**
306375	**819859**
309192D	**819853**
309192D	**819854**
309192D	**820134**
309987D	**819938**
310092D	**820478**
310587D	**819938**
310982D	**819960**
310982D	**820008**
310987D	**819960**
310987D	**820150**
311882D1	**819966**
311888D1	**819846**
311888D1	**819966**
311888D1	**819967**
311982	**819875**
311982	**819943**
311982	**820044**
311982	**820165**
311982D3	**819943**
311982D4	**819942**
311982D5	**819875**
311988	**819943**
311988D3	**819943**
312375	**820444**
313682	**819862**
313682	**820008**
313682D50	**819946**
313688	**820454**
314187D	**820171**
314290	**820970**
314387D	**820962**
314690	**820970**
315187D	**819938**
315982D	**819895**
315982D	**819896**
316388D	**820446**
316388D	**820454**
316689D	**820138**
317489D	**820048**
330080D	**820464**
330180D	**820465**
330280D	**820067**
333683	**819913**
333880	**820791**
334480	**819904**
335180	**819837**
335185	**819837**
335680D	**819939**
335885D	**819940**
336087D	**819958**

WAHLER (.../...)

336187D	**819959**
336280D	**819963**
336485D	**819940**
336580D	**820473**
336680D	**820153**
338387	**820444**
339192D	**820151**
343180D	**819963**
346389D	**820434**
346689D	**820025**
346785D	**820152**
346888D	**820072**
346888D	**820191**
346991D	**820009**
347089D50	**819862**
347089D50	**820008**
347287D	**820058**
347788D	**820174**
347882D	**819911**
347882D	**819945**
347882D	**820510**
348188D	**820446**
348389D	**820431**
348487D	**820539**
348587D	**820160**
349788D	**820542**
349888D	**820191**
349888D	**820544**
400386	**819881**
400682D	**819852**
402282D	**820506**
402282D1	**819882**
402288D	**819883**
402683	**819863**
406475D	**819870**
407887D	**819873**
408887D	**820063**
408987D	**819933**
408992D	**820526**
409182	**819885**
41004482D	**820173**
41004482D	**820516**
41008590D50	**820568**
41017492D	**820571**
41017688	**820533**
41017882D	**820173**
41017882D	**820516**
41018082D	**820513**
41018082D	**820553**
41018489D	**820430**
41022478D	**820076**
41022478D	**820165**
41023182D	**820173**
41035188D	**819846**
410382	**820510**
411592D	**819848**
411687D1	**820063**
412287D	**819839**
412287D	**819840**
412287D	**819841**
412287D	**819872**
412287D	**819891**
412380D	**820064**
412380D	**820065**
412688	**820174**
413780D	**820494**
414279	**819930**
414482D	**820070**
414492D	**820050**
414492D	**820071**
414780D	**819839**
414780D	**819898**
414780D	**819905**

WAHLER (.../...)

IAM	Valeo
414780D	**819937**
414780D	**819952**
415176D	**820023**
415179D	**819903**
415482D	**820073**
415488D	**820074**
415587D	**820788**
415880D	**820059**
416083D	**819957**
416492D	**819968**
416492D	**820050**
416892	**820185**
416892D	**820185**
417482D	**820432**
417592D	**820149**
417680D	**819969**
417685D	**819970**
417792D	**819952**
417792D	**820140**
417892D	**820139**
417892D	**820151**
418082D	**820435**
418082D	**820500**
418382D	**820258**
418392D	**820071**
418392D	**820141**
418892D	**820507**
418987D	**820437**
419892D	**820503**
420192D	**820592**
420892D	**820504**
423180D	**819887**
423580D	**819948**
423688D	**819949**
423692D	**820143**
423780D	**820064**
423892D	**820142**
424292D	**820593**
424780D	**820460**
425582D	**819867**
425587D	**820148**
425592D	**819869**
425680D	**819867**
425680D60	**819867**
425687D50	**819847**
425687D50	**819868**
425687D50	**820525**
425692D50	**819848**
426484D	**820132**
426487D	**820168**
426978	**820054**
426978	**820076**
427088D	**820051**
427088D	**820475**
427088D	**820547**
427290D	**819926**
427290D	**820040**
427487D	**820027**
427492D	**820414**
427587D	**820184**
427687D	**820147**
427880D	**820979**
428187D	**820495**
432694D	**820421**
432694D	**820422**
432697D	**820421**
432697D	**820422**
4337105D	**820930**
442892D	**820591**
443392D	**820590**
443480D	**820462**
443680D	**820463**
444683D	**819950**

WAHLER (.../...)

IAM	Valeo
444683D	**819955**
444683D	**820047**
445083D	**820471**
445089D	**819934**
445580D	**820958**
445782D	**820565**
445992D	**820151**
448082D	**820512**
448382D	**820565**
451670D	**820426**
451685D	**820423**
451787D	**820424**
461980	**820546**
463476	**820178**
463476	**820181**
463476	**820524**
463576	**819846**
463576	**820176**
463576	**820181**
463776D	**820135**
463782D	**820136**
463782D	**820512**
463782D	**820552**
482189D	**819897**
601088D	**819786**
601092D	**819759**
601095D	**819746**
601095D	**819759**
601592D	**820238**
601692	**819762**
601795D	**819769**
602095D	**819743**
602495D	**820304**
6031100D	**819830**
6031105D	**819830**
603188D	**820242**
603192D	**819774**
603197D	**819774**
603388	**819775**
603592	**820031**
603781	**820303**
603781D	**820303**
603787	**820224**
603787D	**820224**
603790	**820225**
603795D	**820035**
603995D	**820034**
604088	**819775**
608787D	**820229**

Every effort has been made to ensure that the information contained in this catalogue is correct at the time of printing, but no warranty or representation is given or made as to the accuracy of such information and Valeo Service UK Ltd does not accept any liability whatsoever for any inaccuracies.

Valeo Service UK Ltd reserves the right to alter specifications and/or the final construction of products without notice.

Product references referred to in this catalogue may not be available in all countries.

All orders for products are only accepted subject to the terms and conditions of Valeo Service UK Ltd.

Photographs and drawings are not binding on Valeo Service UK Ltd. The copyright in this publication belongs to Valeo Service UK Ltd exclusively. No part of this publication may be reproduced by any means without the prior authorisation of Valeo Service UK Ltd.

L'affectation et la préconisation des produits figurant dans nos catalogues prennent en compte l'état du parc automobile au jour de leur parution.

La responsabilité de Valeo Service ne saurait être engagée en cas de modification, substitution ou suppression des affectations ou préconisations qui pourraient intervenir notamment à l'initiative des constructeurs de véhicules.

Les caractéristiques techniques de nos produits sont susceptibles d'évoluer à tout moment pour tenir compte des améliorations techniques et technologiques.

Certaines références peuvent ne pas être disponibles dans tous les pays.

Les commandes sont régies par les conditions générales de vente de Valeo Service.

Photos et dessins non contractuels. La reproduction de tout ou partie de cette publication est interdite sans l'autorisation expresse et écrite de Valeo Service.

La aplicación de los productos sobre vehículos y las especificaciones de los productos que figuran en nuestros catálogos se refieren a la situación del parque de automóviles en la fecha de puesta en circulación de los productos.

Valeo Service España SA no asume ninguna responsabilidad en caso de modificación, sustitución o supresión de dichas aplicaciones y/o especificaciones que pudieran producirse por iniciativa de los fabricantes de automóviles.

Las características técnicas de nuestros productos son susceptibles de evolucionar en cualquier momento para incorporar las mejoras técnicas y tecnológicas que se desarrollen.

Las referencias de productos mencionadas en este catalogo puede que no estén disponibles en todos los países.

Los pedidos se regiran por las conditiones generales de venta de Valeo Service España SA.

Las fotografías y dibujos que aparecen en nuestros catálogos son meramente indicativas, por lo que no siempre coinciden exactamente con la apariencia externa de nuestros productos. Se prohibe la reproducción de todo o parte de esta publicación sin la autorización expresa y escrita de Valeo Service España SA.

As prescrições e recomendações relativas ao uso ou utilidade dos produtos constantes de nossos catálogos levam em consideração o estado do parque automotivo à época do lançamento desses produtos.

A Valeo Sistemas Automotivos Ltda (Valeo Cibié Service) não será responsável por quaisquer modificações, substituições ou supressões incidentes sobre as prescrições e recomendações relativas ao uso ou utilidade de nossos produtos, que sejam decorrentes de ações dos construtores de veículos.

As características técnicas de nossos produtos são suscetíveis de alteração a qualquer momento para que sejam incorporadas melhorias técnicas e/ou tecnológicas.

Certas referências podem não estar disponíveis em todos os países.

Os pedidos feitos pelos clientes são regidos pelas condições gerais de venda da Valeo Sistemas Automotivos Ltda (Valeo Cibié Service).

Fotos e desenhos não contratuais. A reprodução do todo ou de parte desta publicação é proibida sem a autorização expressa e por escrito da Valeo Sistemas Automotivos Ltda (Valeo Cibié Service).

Le applicazioni e le specifiche dei prodotti che figurano nei nostri cataloghi si riferiscono alla situazione del parco circolante al momento della pubblicazione.

Valeo Service Italia S.p.A. declina qualsiasi responsabilità in caso di modifica, sostituzione o soppressione di applicazioni o specifiche eventualmente apportate, senza preavviso, da parte dei Costruttori .

Le caratteristiche tecniche dei nostri prodotti sono suscettibili di modifiche in qualsiasi momento, per apportare migliorie tecniche e tecnologiche.

Alcuni riferimenti presenti in questo catalogo non sono disponibili in tutti i paesi.

Gli ordini sono regolamentati dalle condizioni generali di vendita di Valeo Service Italia S.p.A..

Le Foto ed i disegni che appaiono nel catalogo sono puramente indicativi. E' vietata la riproduzione della totalità o di una parte della presente pubblicazione senza un'esplicita autorizzazione scritta da parte di Valeo Service Italia S.p.A..

De ter zake van de producten in onze catalogi aangegeven bestemmingen en gedane aanbevelingen zijn gebaseerd op het wagenpark ten tijde van publicatie.

Valeo Service Benelux B.V. sluit elke aansprakelijkheid uit met betrekking tot wijziging, vervanging of annulering van de bestemmingen of aanbevelingen, die met name op initiatief van de autofabrikanten kunnen worden doorgevoerd.

De technische eigenschappen van onze producten kunnen te allen tijde evolueren teneinde rekening te houden met technische en technologische verbeteringen.

Bepaalde artikelen kunnen in bepaalde landen niet beschikbaar zijn.

Orders zijn onderworpen aan de algemene verkoopvoorwaarden van Valeo Service Benelux B.V.

Foto's en tekeningen zijn niet bindend.

De gehele of gedeeltelijke verveelvoudiging van deze uitgave zonder uitdrukkelijke voorafgaande schriftelijke toestemming van Valeo Service Benelux B.V. is verboden.

Die Verwendungsempfehlungen zu den in diesem Katalog aufgeführten Produkten beziehen sich auf den zum Zeitpunkt des Erscheinens dieses Katalogs existierenden Fahrzeugbestand.

Valeo Service Deutschland GmbH übernimmt keine Haftung für Änderungen, Ersetzungen oder Streichungen der Fahrzeuganwendung oder -Empfehlungen, die besonders auf Initiative der Fahrzeughersteller auftreten können.

Die technischen Eigenschaften unserer Produkte unterliegen ständiger Entwicklung, um technischen und technologischen Verbesserungen Rechnung zu tragen.

Die Fotos oder Zeichnungen in diesem Katalog dienen ausschliesslich der Veranschaulichung unserer Produkte. Rechtliche Ansprüche können daraus nicht abgeleitet werden.

Einige Produktreferenzen sind nicht in allen Ländern verfügbar.

Lieferungen unterliegen den Allgemeinen Verkaufsbedingungen von Valeo Service Deutschland GmbH.

Die Vervielfältigung dieses Katalogs oder Teilen davon ohne die schriftliche Erlaubnis von Valeo Service Deutschland GmbH ist nicht zulässig.

Przeznaczenie i zalecenia dotyczące produktów figurujących w naszych katalogach biorą pod uwagę stan parku samochodowego w dniu ich wprowadzenia na rynek.

Spółka "Valeo Service Eastern Europe Sp.zo.o." nie może być ponosić odpowiedzialności w przypadku zmiany, zastąpienia lub usunięcia wskazówek dotyczących przeznaczenia i zaleceń, które mogą wystąpić z inicjatywy producentów samochodów.

Dane techniczne naszych produktów mogą być w każdej chwili zmienione w celu uwzględnienia ulepszeń technicznych i technologicznych.

Niektóre modele mogą być niedostępne w niektórych krajach.

Zamówienia podlegają ogólnym warunkom umów "Valeo Service Eastern Europe Sp.zo.o.".

Wykorzystywanie w całości lub w części zdjęć i rysunków zamieszczonych w naszych katalogach wymaga pisemnej zgody "Valeo Service Eastern Europe Sp.zo.o.".

Učinili jsme všechny kroky nezbytné k tomu, aby informace v tomto dokumentu byly přesné ke dni jeho tisku. Valeo Service Export nezodpovídá za případné neúplné či chybné informace zde uvedené.

Valeo Service Export si vyhrazuje právo úpravy specifikace a / nebo konečné formy výrobku bez předchozího upozornění.

Katalogová čísla obsažená v tomto katalogu nemusí být dostupná k prodeji na všech trzích. Konečné objednání výrobků se řídí obchodními podmínkami Valeo Service Export.

Fotografie a technické nákresy nezávisí na Valeo Service Export. Copyright je exkluzivně Valeo Service Export. Žádná část tohoto katalogu nesmí být kopírována bez autorizace Valeo Service Export.

A VALEO teljes tudásával arra törekszik, hogy a katalógusban szereplő adatok műszaki tartalma teljesen korrekt legyen, ezért a VALEO SERVICE EXPORT nem vállal garanciát azok helyességéért, pontatlanságáért és nem terheli felelősség az esetleges hibákból eredő károkért.

A VALEO SERVICE EXPORT fenntartja a jogot a termékváltoztatásokra mellékelt termékinformáció nélkül.

A katalógusban szereplő cikkszámok között előfordulhatnak olyanok is, melyek nem minden országban kerülnek forgalomba.

Minden termék rendelés a VALEO SERVICE EXPORT szerződés kondíciói alapján érvényes.

A katalógusban szereplő fényképek és rajzok nem a VALEO SERVICE EXPORT készítményei. A szerzői jogok a VALEO SERVICE EXPORT kizárólagos tulajdonát képezik.

A kiadvány részét nem képező reprodukciókhoz nem szükséges a VALEO SERVICE EXPORT engedélye.

Назначение и рекомендации по эксплуатации продукции, содержащиеся в наших каталогах, указываются с учетом состояния автомобильного парка на день ее появления.

Компания «Valeo Service Eastern Europe Sp.zo.o» не несет ответственности в случае внесения изменений в рекомендации по эксплуатации продукции или их устранения, произошедших, в частности, по инициативе производителей автомобилей.

Технические характеристики нашей продукции могут претерпевать изменения в любой момент, с учетом усовершенствования технических и технологических процессов.

Некоторые виды продукции могут не иметься в наличии в отдельных странах.

Заказы осуществляются согласно общим правилам торговли, применяемым в компании «Valeo Service Eastern Europe Sp.zo.o».

Фотографии и изображения продукции могут не в полной мере соответствовать оригиналам. Воспроизведение всей или части настоящей публикации запрещено без специального письменного согласия компании «Valeo Service Eastern Europe Sp.zo.o».

Kataloglarımızda yer alan ürünlerin kullanım ve tanımları, otomobil parkının yayın tarihindeki durumuna göredir.

Valeo Otomotiv Dağitim AS, özellikle araç, üreticilerinin inisiyatifi sonucu yapılan değişiklik, ikame veya kaldırmalardan sorumlu tutulamaz.

Ürünlerimizin teknik özellikleri, teknik ve teknolojik gelişmelere paralel olarak geliştirilebilir.

Bazı referanslar bazı ülkelerde bulunmayabilir.

Siparişler, Valeo Otomotiv Dağitim AS'un genel satiş koşullarına uygun olarak ödenir.

Fotoğraf ve resimler akdi değildir. Işbu yayının Valeo Otomotiv Dağitim AS'un önceden verilmiş yazılı izni olmaksızın kısmen veya tamamen çoğaltılması yasaktır.

Ο κατάλογος έχει συσταθεί λαμβάνοντας υπόψη τη σύσταση του στόλου αυτοκινήτων την ημέρα, της κυκλοφορίας του.

Η Valeo δε φέρει ευθύνη σε περίπτωση τροποποίησης, αλλαγής ή αντικατάστασης κάποιου αντ/κου που περιέχεται στο κατάλογο, εξαιτίας πρωτοβουλίας του κατασκευαστή του οχήματος.

Τα τεχνικά χαρακτηριστικά των προϊόντων ενδέχεται να διαφοροποιηθούν ανά πάσα στιγμή λόγο τεχνολογικών εξελίξεων.

Μερικοί κωδικοί αντ/κων μπορεί να μην είναι διαθέσιμοι σε κάποιες χώρες.

Οι παραγγελίες υπόκεινται στους γενικούς όρους πωλήσεων της Valeo.

Οι φωτογραφίες και τα σχέδια δεν είναι δεσμευτικά. Η αναπαραγωγή ολόκληρου ή τμήματος αυτού του καταλόγου απαγορεύεται να γίνει χωρίς τη ρητή και γραπτή άδεια της Valeo Service.

Mise en page automatique et Impression Adevence Tel. +33(0) 1 40 36 10 15

EUROPE

FRANCE

VALEO SERVICE FRANCE
70, RUE PLEYEL
93285 SAINT-DENIS CEDEX - FRANCE
TEL.: (+33) 1 49 45 32 32
FAX: (+33) 1 49 45 37 36
S.A.S. au capital de 12 900 000 €
RCS Bobigny B 306 486 408

SPAIN, PORTUGAL

VALEO SERVICE ESPAÑA, S.A.
CALLE RIO ALMANZORA, N°5
AREA EMPRESARIAL ANDALUCIA C.L.A.
28906 GETAFE (MADRID) - ESPAÑA
TEL.: (+34) 91 495 85 00
FAX: (+34) 91 495 86 99
TEL. ATENCIÒN TÉCNICA:
902 011 799
TEL. ATENCIÒN AL CLIENTE:
900 122 657
Valeo Service España Sociedad Anónima
inscrita en el Registro Mercantil de Madrid,
Tomo 972 - Libro 941 de la sección 8ª ,
Folio 25 - Hoja 65435 - Inscripción 1ª NIF. A28772978

ITALY

VALEO SERVICE ITALIA SPA (V.S. ADRIATIC)
VIA ASTI 89
10026 SANTENA (TO) - ITALIA
TEL.: (+39) 011 94 95 1
FAX: (+39) 011 94 95 280
TEL. LINEA TECNICA : 800 805 046
N. iscrizione al Tribunale di Torino 2009/88 reg. soc.
C.C.I.A.A. 715107 - Capitale sociale € 2.600.000

UNITED KINGDOM

VALEO SERVICE UK LTD
HEMING ROAD - WASHFORD
REDDITCH - WORCS B98 0DZ - ENGLAND
TEL.: (+44) 1527 838 300
FAX: (+44) 1527 523 732
Registration Number: 956685

GERMANY

VALEO SERVICE DEUTSCHLAND GMBH
BRANDENBURGER STRASSE 46
40880 RATINGEN - DEUTSCHLAND
TEL.: (+49) 21 02 865 0
FAX: (+49) 21 02 865 142
Handelsregister Ratingen - HRB 3340

BENELUX

VALEO SERVICE BENELUX B.V.
HEIBLOEMWEG 1
5704 BS HELMOND - THE NETHERLANDS
TEL. BELGIUM (NL): (+32) 2 366 99 17
TEL. BELGIUM (FR): (+32) 2 355 14 46
TEL. NETHERLANDS: (+31) 492 580 894
FAX BELGIUM: (+32) 2 366 04 47
FAX NETHERLANDS: (+31) 492 580 828
K.v.K. Eindhoven 33113859

POLAND, LITHUANIA, LATVIA, ESTONIA, MOLDAVIA, BELARUS, UKRAINE

VALEO SERVICE EASTERN EUROPE Sp z o.o.
WOŁOSKA 9A
02-583 WARSAW POLSKA
TEL.: (+48) 22 543 43 00
FAX: (+48) 22 543 43 05
Valeo Service Eastern Europe Sp. z o.o.; NIP 521-11-44-572
VAT UE PL5211144572 – REGON 011909673
Wysokość kapitału zakładowego: 4 637 000 PLN - KRS
56793 Sąd Rejonowy dla m. St. Warszawy w Warszawie,
XIII Wydział Gospodarczy KRS

RUSSIA

VALEO SERVICE CO LTD
107140, MOSCOW
RUSAKOVSKAYA ST. 13,
3RD FLOOR, OFFICE 6
TEL.: (+7) 495 981-06-96
FAX: (+7) 495 787-59-92

SWITZERLAND, AUSTRIA, SWEDEN, FINLAND, NORWAY, DENMARK, ICELAND, EASTERN EUROPE

VALEO SERVICE EXPORT
70, RUE PLEYEL
93285 SAINT-DENIS CEDEX - FRANCE
TEL.: (+33) 1 49 45 32 32
FAX: (+33) 1 49 45 36 59
S.A.S. au capital de 12 900 000 €
RCS Bobigny B 306 486 408

LIAISON OFFICE IN AUSTRIA
MÜHLGASSE 7
2380 PERCHTOLDSDORF - AUSTRIA
TEL.: (+43) 1 480 42 46
FAX: (+43) 1 480 42 34

LIAISON OFFICE IN CZECH REPUBLIC
DEDINSKA 29
16101 PRAGUE 6 - CZECH REPUBLIC
TEL.: (+420) 220 102 277
FAX: (+420) 220 102 278

LIAISON OFFICE IN HUNGARY
ROZSAKVARC UTCA 8
1188 BUDAPEST- HUNGARY
TEL.: (+36) 30 50 51 888
FAX: (+43) 1 480 42 34

LIAISON OFFICE IN SWEDEN
REGUS / VALEO
MASTER SAMUELSGATAN 60, 8TR
SE - 111 21 STOCKHOLM - SWEDEN
TEL.: (+46) 8 50 51 65 50

SOUTH AMERICA

LATIN AMERICA (except Mexico)

VALEO CIBIÉ SERVICE LTDA
RUA SADAE TAKAGI, 2000
BAIRRO COOPERATIVA
09852-070 - SÃO BERNARDO DO CAMPO
SÃO PAOLO - BRASIL
TEL.: (+55) 11 43 93 33 54
FAX: (+55) 11 43 93 33 55
C.N.P.J.: 57.010.662/0008-36
Inscriçao Estadual : 635.331.124.114

VALEO SERVICE ARGENTINA
RUA SADAE TAKAGI, 2000
BAIRRO COOPERATIVA
09852-070 - SÃO BERNARDO DO CAMPO
SÃO PAOLO - BRASIL+
TEL.: (+55) 11 43 93 33 54
FAX: (+55) 11 43 93 33 55
C.N.P.J.: 57.010.662/0008-36
Inscriçao Estadual : 635.331.124.114

MEXICO

LIAISON OFFICE IN MEXICO
MONTECITO 38, PISO 14 OFICINA 38.
TORRE WORLD TRADE CENTER
COLONIA NÁPOLES | 03810 | MÉXICO, D.F.
TEL.: +52 (55) 90001588

ASIA, MIDDLE EAST, AUSTRALIA, NEW-ZEALAND

VALEO SERVICE EXPORT
70, RUE PLEYEL
93285 SAINT-DENIS CEDEX - FRANCE
TEL.: (+33) 1 49 45 32 32
FAX: (+33) 1 49 45 36 59

CHINA

VALEO AUTO PART TRADING (SHANGHAI) CO., LTD
201, BUILDING B, IBC TOWER (NEW INTERNATIONAL BUSINESS CENTER)
391 GUI PING ROAD, SHANGHAI 200233, CHINA
TEL: (+86) 21 5175 2618
MP: (+86) 21 5175 2628

法雷奥汽车零部件贸易（上海）有限公司
地址： 上海市徐汇区桂平路391号新漕河泾国际商务中心B座201
电话： (+86) 21 5175 2618
传真： (+86) 21 5175 2628

TURKEY, IRAN, IRAQ, SYRIA,LEBANON, JORDAN, SAUDI ARABIA, UNITED ARABE EMIRATES, KUWAIT, BAHRAIN, QATAR, OMAN, YEMEN, EGYPT

VALEO OTOMOTIV SISTEMLERI ENDÜSTRISI A.Ş.
AYDINEVLER SANAYI CADDESI
CENTRUM IS MERKEZI N°3
KAT: 3, DAIRE N°302-303 KÜÇÜKYALI - MALTEPE
34854 ISTANBUL - TURKEY
TEL.: (+90) 216 518 75 75
FAX.: (+90) 216 519 93 14

AFRICA, DOM-TOM

VALEO SERVICE EXPORT
70, RUE PLEYEL
93285 SAINT-DENIS CEDEX - FRANCE
TEL.: (+33) 1 49 45 32 32
FAX: (+33) 1 49 45 36 59
S.A.S. au capital de 12 900 000 €
RCS Bobigny B 306 486 408

LIAISON OFFICE IN TUNISIA
CENTRE D'AFFAIRES REGUS
IMMEUBLE CARTHAGE RUE DU LAC DE CONSTANCE
1053 TUNIS - TUNISIA
TEL.: (216) 71 965 002
FAX: (216) 71 965 137
MOB: (216)98 34 91 38

Valeo,
your Thermal Systems
Multi-specialist*

3 276429 556078

valeo added™

Automotive technology, naturally

Valeo

* Valeo, votre Multi-spécialiste en Systèmes Thermiques
© 2014 Valeo Service - Société par Actions Simplifiée - Capital 12.900.000 euros - 306 486 408 R.C.S. Bobigny - 70, rue Pleyel - 93200 Saint-Denis - France • Conception : Valeo Service • Photos : Fotolia / Christian Schryve - Compiègne / enjoy:) • Ref. 955607 • Price : 6 euros