DEPARTMENT OF THE ARMY
BLUE GRASS ARMY DEPOT
431 BATTLEFIELD MEMORIAL HIGHWAY
RICHMOND, KENTUCKY 40475-5060

OPSEC Reviewed by RWR – No sensitive information was discovered.

REPLY TO
ATTENTION OF:

March 13, 2014

Environmental Office

This document has been reviewed for ITAR/EAR and no ITAR/EAR sensitive information was found.

Commonwealth of Kentucky
Department for Environmental Protection
Division of Waste Management, Hazardous Waste Branch
ATTN: April Webb, P.E., Manager
Frankfort Regional Office
200 Fair Oaks Lane, 2nd Floor
Frankfort, KY 40601

Subject: Request for Class 3 Modification to Add Explosive Destruction Technology to RCRA Permit at Blue Grass Army Depot (BGAD)
Blue Grass Chemical Agent-Destruction Pilot Plant (BGCAPP)
Blue Grass Army Depot, Richmond, Kentucky
EPA ID # KY8-213-820-105, AI 2805

Dear Mrs. Webb:

The Program Executive Office, Assembled Chemical Weapons Alternatives (PEO, ACWA) has decided to proceed with the use of the EDT to treat the mustard filled projectiles and items stored at the BGAD. This decision follows the 2011 X-ray assessment of these mustard munitions which confirmed the solidified mustard in a significant number of these munitions, an Environmental Assessment which resulted in a "Finding of No Significant Impact," and a full public involvement process. To implement this decision, BGCAPP (Operator) in coordination with BGAD (Owner) are requesting a Class 3 RCRA Permit Modification to add an EDT Facility for the treatment of mustard-filled munitions and items from the stockpile stored by the Blue Grass Chemical Activity.

Submitted with this letter is a copy of the information provided to support this requested permit modification. This supporting information is formatted in accordance with the KDEP RCRA Permit Application Review Checklists to facilitate review by DWM. There are three volumes in each copy of this submittal. A new signed Part A form for the EDT Facility is also submitted with this request. This submittal is considered OPSEC Sensitive and it is requested that KDEP personnel manage these hardcopy documents accordingly. A CD and hardcopy are also being provided to KDEP which contain versions of the submittal with OPSEC, ITAR or EAR information redacted. This is the version of the modification request which will be placed in each public repository for review by the public.

A public meeting to announce and offer information to describe this permit modification request is scheduled after submittal of this modification request. Following this public meeting

This document has been reviewed for ITAR/EAR and no ITAR/EAR sensitive information was found.

documentation for the meeting will be provided to DWM to verify the public information activities supporting this request.

If you have any questions or require additional information, please do not hesitate to contact BGAD / BPBG Environmental Offices: Mr. Ramesh Melarkode at (859) 779-6268, or Mr. John McArthur at (859) 625-6447.

"I certify under penalty of law that this document and all attachments were prepared under my direction or supervision in accordance with a system designed to ensure that qualified personnel properly gather and evaluate the information submitted. Based on my inquiry of the person or persons directly responsible for gathering the information, the information submitted is, to the best of my knowledge and belief, true, accurate, and complete. I am aware that there are significant penalties for submitting false information, including the possibility of fine and imprisonment for knowing violations."

Sincerely,

Douglas Omichinski
Project Manager
Bechtel Parsons Blue Grass
BGCAPP Operator

Lee G. Hudson
Colonel, LG
Commanding
BGCAPP Owner

Enclosure

Copy Furnished:
Jeff Brubaker, PM-ACWA

John McArthur, BPBG
Ramesh Melarkode, BGAD

This document contained Export Control/International Traffic in Arms Regulations Information.

This document did contain Operations Security (OPSEC) sensitive information. All OPSEC sensitive material has been removed. Information removed has been replaced with "(SENSITIVE INFORMATION REMOVED)" or the abbreviation "(SIR)." Persons with a need to know may apply to the Blue Grass Chemical Agent Destruction Pilot Plant Site Manager for release of sensitive information.

24915-70-GPE-GGPT-00001

Resource Conservation and Recovery Act (RCRA)

Class 3 Hazardous Waste Storage & Treatment Permit Modification Request, Addition of Explosive Destruction Technology (EDT)

for the Blue Grass Chemical Agent-Destruction Pilot Plant
Blue Grass Army Depot, Richmond, Kentucky

ACWA
Program Manager Assembled Chemical Weapons Alternatives

BGCAPP
Blue Grass Chemical Agent-Destruction Pilot Plant

BLUE GRASS ARMY DEPOT
PIONEER IN QUALITY

Submitted to:

Energy and Environment Cabinet
Kentucky Department for Environmental Protection
Division of Waste Management
200 Fair Oaks Lane, 2nd Floor
Frankfort, Kentucky 40601

Submitted by:

Blue Grass Army Depot
431 Battlefield Memorial Highway, Richmond, Kentucky 40475-5901
and

Bechtel Parsons Blue Grass
830 Eastern Bypass, Suite 106, Richmond, Kentucky 40475

BECHTEL PARSONS BLUE GRASS
A Joint Venture of Bechtel National, Inc. and Parsons Government Services Inc.

(CDRL A010)

Submitted 13 MAR 2014, Revision/Submission 0

Final Page Is L-231

This document contained Export Control/International Traffic in Arms Regulations Information.

Table of Contents

Acronyms/Abbreviations A-7
Part A : Kentucky Hazardous Waste Permit Application A-10
Part B : Facility Description [401 KAR 38:090, Section 2 & 40 CFR 270.14] B-18
B-1 : General Description [401 KAR 38:090, Section 2 & 40 CFR 270.14(b)] B-19
B-2 : Topographic Map [401 KAR 38:090, Section 2(17) & 40 CFR 270.14(b)(19)] B-20
B-3 : Location Information [401 KAR 34:020, Section 9(1) and (2); 38:090, Section 2 (20) and Section 3 & 40 CFR 270.14(b)(11), and 270.14(b)(11)(i through v)] B-22
B-4 : Traffic Information [401 KAR 38:090, Section 2(10) & 40 CFR 270.14(b)(10)] B-23
B-5 : Requirements for Applicants for Construction Permits [401 KAR 38:090, Section 2(18) and KRS 224.46 520(1)] B-25
B-6 : Applicants Other than Interim Status - Other Documents [401 KAR 38:090, Section 2(20)(a)] B-26
B-7 : Financial Responsibility to Construct and Operate [401 KAR 38:090, Section 2(24), KRS 224.40-325 & 40 CFR 270.14(b)(18), 264.145, 264.147, and 264.150] B-26
B-8 : Public Participation [401 KAR 38:050, Sections 14 and 38:090, Section 2(25) & 40 CFR 124.31] B-26
B-9 : Fees [401 KAR 39:090, Sections 2 and 3, 39:120, & KRS 224.46-016 and 018] B-26
Part C : Waste Analysis Plan [401 KAR 38:090, Section 2(3), 34:020, Section 4 & 40 CFR 270.13(c) and 264.13] C-35
C-1 : Introduction C-35
Containers C-39
Waste in Tank Systems C-39
Land Disposal Units [401 KAR 31:170; 401 KAR 38:090, Section 4 & 40 CFR 261, Appendix VIII; 40 CFR 270.14(c)] C-39
Land Treatment Units [401 KAR 31:170; 401 KAR 38:090, Section 4 & 40 CFR 261, Appendix VIII; 40 CFR 270.14(c)] C-39
Wastes To Be Land Treated C-40
Incinerators [401 KAR 31:170 401 KAR 34:240; 401 KAR 38:190 & 40 CFR 261 Appendix VIII; 40 CFR 270.19] C-40
Boilers and Industrial Furnaces [401 KAR 31:170; 401 36:020; 401 KAR 38:260 & 40 CFR 261 Appendix VIII] C-40
Waste in Miscellaneous Treatment Units C-40
C-2 : Waste Analysis Plan [401 KAR 38:090, Section 2(3), 34:020, Section 4 & 40 CFR 264.13] C-40

This document contained Export Control/International Traffic in Arms Regulations Information.

Additional Requirements for Wastes Generated Offsite C-45
Applicability of Treatment Standards C-45
C-3 : Additional Waste Analysis Requirements Pertaining to Land Disposal Restrictions [401 KAR 37:010, Section 7, 34:020 Section 4, 36:020 Section 3, 38:090 Section 2(3) & 40 CFR 264.13(a)(1), 264.13(b)(6), 266.101(a)(2)(ii), and 268.7] C-45
Part D : Process Information: Containers [401 KAR 34:180, 38:150, and 34:190, Sections 1 & 3 & 40 CFR 264.170-179, 270.15, 264.190, and 264.192(a)] D-65
D-1 : Containers [401 KAR 34:180 and 38:150 & 40 CFR 264.170–179 and 270.15] D-74
D-2 : Process Information: Tank Systems [401 KAR 34:160 and 34:190 & 40 CFR 264.190 and 270.16] D-81
D-3 : Surface Impoundments [401 KAR 34:200 and 38:170 & 40 CFR 264. 220 and 270.17] D-82
D-4 : Waste Piles [401 KAR 34:210 and 38:180 & 40 CFR 264.250 and 270.18] D-82
D-5 : Land Treatment [401 KAR 34:220 and 38:200 & 40 CFR 264.270 and 270.21] D-82
D-6 : Landfill Design [401 KAR 34:230 and 38:210 & 40 CFR 264.300 and 270.20] D-82
D-7 : Incinerators [401 KAR 34:240 and 38:190 & 40 CFR 264.340 and 270.19] D-82
D-8 : Miscellaneous Units [401 KAR 38:230 and 34:250 Section 2 & 40 CFR 270.23 and 264.601] D-82
Part E : Groundwater Monitoring [401 KAR 34:060 Section 1 & 40 CFR 264.90(b)(2)] E-151
Part F : Procedures to Prevent Hazards F-152
F-1 : Security [401 KAR 34:020 Section 5 & 40 CFR 264.14] F-152
F-2 : Inspection Schedule [401 KAR 34:020 Section 6 & 40 CFR 264.15] F-155
F-3 : Waiver of Preparedness & Prevention Requirements [401 KAR 38:090, Section 2(6) & 40 CFR 270.14 (b)(6)] F-157
F-4 : Preventive Procedures, Structures, and Equipment [401 KAR 38:090 Section 2(8) & 40 CFR 270.14(b)(8)] F-158
F-5 : Prevention of Reaction of Ignitable, Reactive, or Incompatible Wastes [401 KAR 38:090 Section 2(9) & 40 CFR 270.14(b)(9)] F-164
Part G : Contingency Plan and Emergency Procedures [401 KAR 38:090, Section 2(7), 34:040, Sections 1-7, and 34:190 Section 7 & 40 CFR 264.50-264.56 and 264.196] G-181
G-1 : General Information [401 KAR 34:040, Section 3 and Section 7 & 40 CFR 264.52 and 264.56] G-181
G-2 : Emergency Coordinators (ECs) [401 KAR 34:040 Section 6 & 40 CFR 264.52(d) and 264.55] G-183
G-3 : Implementation [401 KAR 34:040 Section 2 & 40 CFR 264.51(b)] G-183

This document contained Export Control/International Traffic in Arms Regulations Information.

G-4 : Emergency Response Procedures [401 KAR 34:040 Section 7 & 40 CFR 264.56] G-184
G-5 : Emergency Equipment [401 KAR 34:040 Section 3(5) & 40 CFR 264.52e] G-192
G-6 : Coordination Agreements [401 KAR 34:040 Section 3 & 40 CFR 264.52(c)] G-193
G-7 : Evacuation Plan [401 KAR 34:040 Section 3 & 40 CFR 264.52f] G-193
G-8 : Required Reports [401 KAR 34:040 Section 7 & 40 CFR 264.56(i)] G-194
Part H : Personnel Training [401 KAR 34:020 Section 7 and 40 CFR 264.16] H-204
H-1 : Outline of Training Program [401 KAR 34:020 Section 7 and 40 CFR 264.16] H-204
H-2 : Implementation of Training Program [401 KAR 34:020 Section 7 and 40 CFR 264.16(b)&(e)] H-209
Part I : Closure Plan, Post Closure Plans and Financial Requirements [401 KAR 34:070 Sections 2–6; 34:080 Section 2(3); 34:180 Section 9; 34:190 Section 8; 34:250 Section 2; & 40 CFR 264.111–115, 264.178, and 264.601] I-215
I-1 : Closure Plan I-215
I-2 : Post-Closure Plan [401 KAR 34:070 Section 2 and 34:250 & 40 CFR 264.118 and 264.601] I-222
I-3 : Notices Required for Disposal Facilities I-223
I-4 : Closure Cost Estimate [401 KAR 34:090 Section 1 & 40 CFR 264.142] I-223
I-5 : Financial Assurance Mechanism for Closure [401 KAR 34:090 Section 2 & 40 CFR 264.143] I-223
Part J : Other Federal Laws J-230
J-1: Wild and Scenic River Act J-230
J-2: National Historic Preservation Act J-230
J-3: Endangered Species Act J-230
J-4: Coastal Zone Management Act J-230
J-5: Fish and Wildlife Coordination Act J-230
Part K : Waste Minimization [401 KAR 38:090 Section 2(23) and 38:030 Section 1(12)(h)(4) & 40 CFR 270.30] K-231
Part L : Signatures [401 KAR 38:070 Section 7 & 40 CFR 270.11] L-231

This document contained Export Control/International Traffic in Arms Regulations Information.

List of Figures

Figure B-1: BGAD Location B-27
Figure B-2: EDT Facility Location and Surrounding Land Use B-28
Figure B-3: Facility and Flood Zone B-29
Figure B-4: Facility Wind Rose B-30
Figure B-5: Facility Layout B-31
Figure B-6: Geology Surrounding Facility B-32
Figure B-7: Soil Types B-33
Figure B-8: Traffic Flow B-34
Figure D-1 – Conceptual Process Flow Diagram (PFD) D-66
Figure D-2: M110 155mm Projectile Pallet D-72
Figure D-3 – Proposed Storage Arrangement and Containment for the Service Magazine D-77
Figure D-4 – EDT Facility Layout D-116
Figure D-5 – EEB Layout D-117
Figure D-6 – EDT Process Equipment Layout D-118
Figure D-7 – OTS Process Equipment Layout D-119
Figure D-8 – OTS Process Equipment Layout Reverse Angle D-120
Figure F-1: Inspection Schedule for EDT Facility F-168
Figure F-2: EDT Facility – Permitted Storage Area Service Magazine F-173
Figure F-3: Typical Daily Inspection of SDC – Subpart X (Miscellaneous) System EDT Facility – General Facility Inspection F-175
Figure F-4: EDT Facility Chemical Agent Monitors – MINICAMS® F-176
Figure F-5: EDT Facility Chemical Agent Monitors – DAAMS F-178
Figure F-6: Inspection Log F-180
Figure G-1: EDT Facility BGAD Location G-195
Figure G-2: Hazardous Materials/Waste Routes G-196
Figure G-3: EDT Facility Integrated Response Organization G-197
Figure G-4: Evacuation Routes Map G-198
Figure G-5: Typical Incident Report G-199
Figure I-1: EDT Preliminary Closure Schedule I-224
Figure I-2: Closure Certification Statement I-225

This document contained Export Control/International Traffic in Arms Regulations Information.

List of Tables

Table C-1: EDT Facility Wastes, Testing, and Rationale for Proposed Testing C-48
Table C-2: Waste Sampling Methods and Equipment C-53
Table C-3: EDT Facility Waste Analysis (WAP) Summary C-54
Table D-1: Commonly Used Hazardous Waste Containers D-100
Table D-2: Secondary Containment Volumes for Permitted Unit – Service Magazine D-101
Table D-3: Operating Conditions for Subpart X Unit – SDC D-113
Table D-4: Subpart X Safety Features D-115
Table F-1 – Airborne and Related Exposure Limits for Sulfur Mustard Agent (H/HD/HT) F-161
Table G-1: EDT Facility, Non-Chemical Agent Response Emergency Equipment G-200
Table G-2: Emergency Response Agency Notification List G-201
Table I-1: Maximum Inventory of Wastes at Beginning of Closure I-226
Table I-2: Clean Closure Criteria for Final Rinse and Soil Samples I-227

List of Appendices

Appendix C-1 : Headspace Air Monitoring and Army Decontamination Levels C-59
Appendix D-1 : Process Flow Diagrams (PFDs) and Material and Energy Balances D-121
Appendix D-2 : Piping & Instrumentation Diagrams (P&IDs) D-131
Appendix D-3 : GEKA Facility, Munster, Germany -- Static Detonation Chamber Testing Using a Dynasafe SDC 2000 Final Report D-147
Appendix D-4 : Anniston Chemical Agent Disposal Facility, Static Detonation Chamber, Emissions Test Plan, Revision 2, August 2010 ..... D-148
Appendix D-5 : Anniston Chemical Agent Disposal Facility, Static Detonation Chamber, Emissions Test Report, Condition 4b, Revision 0, October 2011 ..... D-149
Appendix D-6 : Human Health Risk Assessment Report for Explosive Destruction Technology (EDT) Alternatives at Blue Grass Chemical Agent-Destruction Pilot Plant with Addendum D-150
Appendix G-1 : General Emergency Response Procedural Guide G-202
Appendix H-1 : Curriculum H-210

List of Appendix Tables

Appendix Table C-1-1 : AEL for EDT Mustard Agent[1, 2] C-64
Appendix Table C-1-2 : Summary of Bounding Conditions for Mustard* C-64

This document contained Export Control/International Traffic in Arms Regulations Information.

Acronyms/Abbreviations

Acronym	Definition
ACWA	Assembled Chemical Weapons Alternatives
AEGL	Acute Exposure Guideline Level
AEL	Airborne Exposure Limit
AMC	Army Materiel Command
ANCDF	Anniston Chemical Agent Disposal Facility
AR	Army Regulation
AS	Area Supervisor
ASC	acceptable stack concentration
ASTM	ASTM International *{formerly the American Society for Testing and Materials}*
BGAD	Blue Grass Army Depot
BGCA	Blue Grass Chemical Activity
BGCAPP	Blue Grass Chemical Agent-Destruction Pilot Plant
BPBG	Bechtel Parsons Blue Grass
BTRA	Bounding Transportation Risk Assessment
BWT	Bleed Water Tank
CAIRA	Chemical Accident or Incident Response and Assistance
CCTV	closed-circuit television
CFR	Code of Federal Regulations
CLA	Chemical Limited Area
CMA	Chemical Materials Agency
CRO	control room operator
CSM	chemical surety materiel
CWC	Chemical Weapons Convention
DA	Department of the Army
DAAMS	depot area air monitoring system
DAC	Defense Ammunition Center
DAVINCH	Detonation of Ammunition in a Vacuum Integrated Chamber
DC	detonation chamber
DDESB	Defense of Department Explosives Safety Board
DL	distance learning
DOD	Department of Defense
DOT	Department of Transportation
DPE	demilitarization protective ensemble
DRE	destruction and removal efficiency
EA	environmental assessment
EC	emergency coordinator
EDT	explosive destruction technology
EEB	EDT Enclosure Building

This document contained Export Control/International Traffic in Arms Regulations Information.

EONC	enhanced onsite container
EPA	Environmental Protection Agency
ERC	Emergency Response Commission
ESM	EDT Service Magazine
FAT	factory acceptance test
FCS	facility control system
FPI	feed prohibitive interlocks
FR	Federal Register
GPL	general population limit
HAZMAT	hazardous material
HAZWOPER	hazardous waste operations and emergency response
HEPA	high-efficiency particulate air (filter)
HHRA	human health risk assessment
HMI	human-machine interface
HMRT	hazardous material response team
HOC	contain halogenated organic compounds
HVAC	heating, ventilating, and air-conditioning
HWMU	hazardous waste management unit
HYPU	hydraulic power unit
IBC	intermediate bulk container
IDHL	immediately dangerous to life and health
ISCP	Installation Spill Contingency Plan
ISD	instructional systems design
ITAR	International Traffic in Arms Regulations
JM&LLCMC	Joint Munitions and Lethality Life Cycle Management Command
KAR	Kentucky Administrative Regulation
KDEP	Kentucky Department for Environmental Protection
KRS	Kentucky Revised Statute
LCO	limiting condition of operation
LDR	Land Disposal Restriction
M&EB	material and energy balance
Mg/m3	Milligrams per cubic meter
MHE	material handling equipment
MINICAMS®	trade name for a near real-time continuous air monitoring system
MOA	memorandum of agreement
MSDS	material safety data sheet
NDE	non-destructive equipment
NEPA	National Environmental Policy Act
NEW	net explosive weight
NIOSH	National Institute for Occupational Safety and Health

This document contained Export Control/International Traffic in Arms Regulations Information.

NRC	National Research Council
O&M	operations and maintenance
OB/OD	open burning/open detonation
OC	Operations Center
OJT	on-the-job training
OPSEC	operations security
OSC	On Scene Commander
OSHA	Occupational Safety & Health Administration
OTM	off-gas treatment system/MPT/ANS
OTS	off-gas treatment system
P&ID	piping and instrumentation diagram
PCB	polychlorinated biphenyl
PCC	propellant charge container
PEO ACWA	Program Executive Office - Assembled Chemical Weapons Alternatives
PFD	process flow diagram
PLC	programmable logic controller
PPE	personal protective equipment
PSD	plant systems description
RCRA	Resource Conservation and Recovery Act
RD&D	research, development, and demonstration
RQ	reportable quantity
SAT	site acceptance test
SDC	static detonation chamber
SEL	source emission level
SOP	standing operating procedure
SPCC	spill prevention control and countermeasures
SME	subject matter expert
SPM	Shift Plant Manager
SRC	single-round container
STEL	short-term exposure limit
TAR	Temporary Authorization Request
TCLP	toxicity characteristic leaching procedure
TOCDF	Tooele Chemical Agent Disposal Facility
TSDF	treatment, storage, and disposal facility
TWA	time-weighted average
U.S.	United States (of America)
UPS	uninterruptible power supply
VSL	vapor screening level
WAP	waste analysis plan
WPL	worker population limit

This document contained Export Control/International Traffic in Arms Regulations Information.

Part A: Kentucky Hazardous Waste Permit Application

Kentucky Energy and Environment Cabinet
Department for Environmental Protection
Division of Waste Management
200 Fair Oaks Line - Frankfort, Kentucky 40601

Part A of the Kentucky Hazardous Waste Permit Application

DO NOT WRITE IN THIS SPACE

Facility's EPA ID No.	K	Y	8	2	1	3	8	2	0	1	0	5

FOR OFFICIAL USE ONLY

☐ FIRST SUBMITTAL *(see INSTRUCTIONS)* ☒ REVISION ☐ RENEWAL PAGE 1 OF 8

Name of Facility: Explosive Destruction Technology(EDT) Facility.

1. Location of Facility: 431 Battlefield Memorial Highway
   City: Richmond State: KY Zip Code: 40475-5001
   County: Madison *See INSTRUCTIONS:* Latitude: 37º 42' 00" N Longitude: 84º 12' 30" W

2. Name of Land Owner: U.S. Department of the Army
   Legal status of Land Owner: ☒ Federal (F) ☐ State (S) ☐ County (C) ☐ Indian (I)
   ☐ Municipal (M) ☐ District (D) ☐ Private (P)
   ☐ Other (O) specify:

   Land Owner's Mailing Address: 431 Battlefield Memorial Highway
   City: Richmond State: KY Zip Code: 40475-5001
   Facility Land Owner's Telephone Number: (859) 779-6246

3. Existing Facilities, provide the date operation began or construction commenced: 1941
   (Month, Day, Year)
   New Facilities, provide the date operation is expected to begin: 12/31/2016
   (Month, Day, Year)

4. Facility Mailing Address: 431 Battlefield Memorial Highway
   City: Richmond State: KY Zip Code: 40475-5001

5. Facility Contact Person: Ramesh Melarkode
   Title: Environmental Coordinator Phone Number: (859) 779-6268
   Facility Contact Person may be reached at ☐ Mailing Address ☒ Location Address ☐ Other Specify:
   Street Address: 431 Battlefield Memorial Highway
   City: Richmond State: KY Zip Code: 40475-5001

This document contained Export Control/International Traffic in Arms Regulations Information.

1

PAGE 2 OF 8

Facility's EPA ID Number											
K	Y	8	2	1	3	8	2	0	1	0	5

8. Name of Facility Operator: *See INSTRUCTIONS:* Bechtel Parsons Blue Grass Joint Venture (BPBG) -- BPBG became Operator for Demilitarization of Chemical Munitions on June 13, 2003.

Type of Owner: ☒ Federal (F) ☐ State (S) ☐ County (C) ☐ Indian (I)
☐ Municipal (M) ☐ District (D) ☐ Private (P)
☐ Other (O) specify:_____

Operator's Mailing Address: 830 Eastern Bypass, Suite 106
City: Richmond State: KY Zip Code: 40475
Facility Operator's Telephone Number: (859) 625-1665

New Operator Assumed Responsibility for Facility on this Date: 06/13/2003
(Month, Day, Year)

9. Name of Facility Owner: *See INSTRUCTIONS:* U.S. Department of the Army

Legal status of Land Owner: ☒ Federal (F) ☐ State (S) ☐ County (C) ☐ Indian (I)
☐ Municipal (M) ☐ District (D) ☐ Private (P)
☐ Other (O) specify:_____

Owner's Mailing Address: 431 Battlefield Memorial Highway
City: Richmond State: KY Zip Code: 40475-5001

Facility Owner's Telephone Number: (859) 779-6246

New Operator Assumed Responsibility for Facility on this Date: 1941
(Month, Day, Year)

10. SIC Codes: (1) 9711 (2) (3) (4)

Briefly describe the type of business conducted at this site: National Security (U.S. Army). BPBG Joint Venture became Operator for demilitarization of chemical munitions on June 13, 2003.

DEP-7058A (July 1997)

2

3

PAGE 3 OF 8

Facility's EPA ID Number: K Y 8 2 1 3 8 2 0 1 0 5

11. PROCESS DESCRIPTION. ***See Instructions***

Commercial Indicator	Unique Unit or Group Name	Legal Status Code	Process Codes	Process Design Capacity Of All Units Listed Under This Name	Unit of Measure	Number Of Individual Units In This Process	Operating Status Code	Description Of Process
4	Static Detonation Chamber (SDC)	PR	X99	70.2	J	1	BC	Subpart X Unit will treat Mustard Agent - H Munitions/DOT bottles (only two in stockpile) containing mustard agent and provide agent destruction. Maximum processing rate is 6 containers per hour. Scrap metal from chamber is recycled.
4	Service Magazine	PR	S01, T04*	1,206	G	1	BC	Provide RCRA storage of hazardous waste and staging area/ buffer for treatment operations. Maximum storage capacity is 1,206 combined (total) of projectiles and DOT bottles containing a maximum of approximately 1 gallon each of Mustard Agent. Also includes movement from Igloo Apron to the Service Magazine. Transport of projectiles and DOT bottles is within EONCs (enhanced onsite containers). As part of destruction process, these containers are transported by forklift from magazine to EDT (Explosive Destruction Technology) Enclosure Building (EEB) for destruction. These transport activities are described further in Part D of this modification request document.

*Transportation and mechanical accessing/handling of these items are defined as treatment by Kentucky Revised Statute 224.50-130(5) as interpreted by KDEP.

DEP - 7058A (July 1997)

This document contained Export Control/International Traffic in Arms Regulations Information.

PAGE 4 OF 8

Facility's EPA ID Number											
K	Y	8	2	1	3	8	2	0	1	0	5

12. WASTE STREAM DESCRIPTION. ***See Instructions.***

WASTE STREAM NUMBER	ESTIMATE ANNUAL WASTE AMOUNT	UNIT OF MEASURE	EPA WASTE NUMBERS	PROCESS CODE ASSOCIATED WITH THIS WASTE
1	729*	TONS	D004, D005, D006, D007, D008, D009, D010, D011, and/or N003	X99; SDC (Static Detonation Chamber) Chamber Residue -- *Scrap metal to be recycled and therefore, excluded from regulation as hazardous waste [40 CFR 261.2(e) and 261.6(a)(3)].
2	<1	TONS	D001, D002, D004, D005, D006, D007, D008, D009, D010, D011, D022, D026, D027, D028, D029, D030, D037, D039, D040, F001-F005, and/or N003	S01; Agent-contaminated Derived-From KY Wastes -- PPE, trash, rags, munitions dunnage, operations & maintenance wastes
3	<1	TONS	D001, D002, D003, D004, D005, D006, D007, D008, D009, D010, D011, D022, D026, D027, D028, D029, D030, D037, D039, D040, F001-F005, and/or N003	S01; Laboratory Wastes & Solvents
4	1.5	TONS	D001, D002, D003, D004, D005, D006, D007, D008, D009, D010, D011, D022, D028, D030, D039, D040, F001-F005, and/or N003	S01; Miscellaneous Wastes
5	<1	TONS	D002, D004, D005, D006, D007, D008, D009, D010, D011, and/or N003	S01; Liquid from OTS (Off-gas Treatment System) Scrubbers
6	3	TONS	D004, D005, D006, D007, D008, D009, D010, D011 and/or N003	S01; Solids from the OTS Buffer Tank
7	4	TONS	D004, D005, D006, D007, D008, D009, D010, D011, and/or N003	S01; Dry Salts and Particulates from the OTS Spray Dryer
8	7	TONS	D001, D004, D005, D006, D007, D008, D009, D010, D011, and/or N003	S01; Particulates and Adsorbed Vapors in the Carbon Beds, HEPA Filters, and Pre-filters from the OTS Final Filter Unit

1

This document contained Export Control/International Traffic in Arms Regulations Information.

PAGE 5 OF 8

Facility's EPA ID Number											
K	Y	8	2	1	3	8	2	0	1	0	5

12. WASTE STREAM DESCRIPTION (Continued). *See Instructions.*

WASTE STREAM NUMBER	ESTIMATE ANNUAL WASTE AMOUNT	UNIT OF MEASURE	EPA WASTE NUMBERS	PROCESS CODE ASSOCIATED WITH THIS WASTE
9	12	TONS	D004, D005, D006, D007, D008, D009, D010, D011, and/or N003	S01; Dust and Metal Oxides from the OTS Bag House Filters

13. Existing Environmental Permits:

Inter-State Regional Program [A]: _____
Single Well (FURS) [B]: _____
County Program [C]: _____
DOE Program [D]: _____
Other EPA Program [E]: _____ specify: _____
EPA 404 (dredge or fill program) [F]: _____
USGS Program [G]: _____
Area Wells (FURS) [H]: _____
NOTIS [J]: _____
Superfund (CERCLA) [K]: _____
FATES [L]: _____
Municipal (city, town, etc.) Program [M]: _____
NPDES/KPDES (discharges to surface water) [N]: **KY0020737; KYR10**
PSD (Prevention of Significant Deterioration - Clean Air Act) [P]: **Title V permits, BGAD V-05-020, Rev.2, Proposed, Nov. 2007 &BGCAPP V-10-023, Rev.0, Final, June 2011**
CDS [Q]: _____
RCRA (hazardous wastes) [R]: **KY8-213-820-105, AI2805**
State Program [S]: _____
DOT Program [T]: _____
UIC (underground injection of fluids) [U]: _____
Intra-State Regional Program [W]: _____
Other Federal Program [X]: _____ specify: _____
CICIS (OTS Chemicals in Commerce Information System) [Y]: _____
Other Non Federal Programs [Z]: **Permit to Withdraw Public Water (Permit No. 1013)**

14. FACILITY STATUS:

☒ Waste is NOT received from off-site ☐ Accepts waste from any off-site source(s) [A]
☐ Accepts waste from only a restricted group of off-site sources(s) [R]:
Specify: _____

15. PHOTOGRAPHS, DRAWING AND MAP - *See INSTRUCTIONS*

All existing facilities must include photographs (aerial or ground level) that clearly delineate all existing structures; existing storage, treatment or disposal areas; and sites of future treatment, storage or disposal areas. All existing facilities must include a drawing showing the general layout of the facility and a topographic map. The photographs, drawing and map must be attached to this form.

1

This document contained Export Control/International Traffic in Arms Regulations Information.

16. If the facility owner is also the facility operator, please skip this section and complete item 17 below.
Owner Certification - I certify under penalty of law that I have personally examined and am familiar with the information submitted in this and all attached documents, and that based on my inquiry of those individuals immediately responsible for obtaining the information, I believe that the submitted information is true, accurate, and complete. I am aware that there are significant penalties for submitting false information, including the possibility of fine and imprisonment.

Lee G. Hudson, Colonel, LG, U.S. Army Commanding Officer		13 Mar 14
NAME (PRINT OR TYPE)	SIGNATURE	DATE SIGNED

17. **Operator Certification** - I certify under penalty of law that I have personally examined and am familiar with the information submitted in this and all attached documents, and that based on my inquiry of those individuals immediately responsible for obtaining the information, I believe that the submitted information is true, accurate, and complete. I am aware that there are significant penalties for submitting false information, including the possibility of fine and imprisonment.

Doug Omichinski, Project Manager, BPBG		13-MAR-14
NAME (PRINT OR TYPE)	SIGNATURE	DATE SIGNED

18. **Land Owner Certification** - I certify under penalty of law that I have personally examined and am familiar with the information submitted in this and all attached documents, and that based on my inquiry of those individuals immediately responsible for obtaining the information, I believe that the submitted information is true, accurate, and complete. I am aware that there are significant penalties for submitting false information, including the possibility of fine and imprisonment.

Lee G. Hudson, Colonel, LG, U.S. Army Commanding Officer		13 Mar 14
NAME (PRINT OR TYPE)	SIGNATURE	DATE SIGNED

1

This document contained Export Control/International Traffic in Arms Regulations Information.

DEP - 7058A (July 1997)

Blue Grass Army Depot
Part A
Page 7 of 8

Facility's EPA ID Number											
K	Y	8	2	1	3	8	2	0	1	0	5

NOTES

Waste streams listed on page 4 (of this Part A) are further described below. The listed streams include only those wastes that will be transported from the facility. Waste streams will be stored at the Explosive Destruction Technology (EDT) Facility in less than 90-day storage [40 CFR 262.34 Accumulation time] until transported offsite for treatment/disposal in a permitted treatment, storage, and disposal facility (TSDF) to be selected following approval of this permit modification request. These wastes are identified as S01 in Item 12, Waste Stream Description, of this form. Waste streams from the Off-gas Treatment System (OTS) included in this listing are considered in process until removed from the OTS. ***Where possible, the facility will use generator knowledge, in lieu of laboratory analyses, or subsequent to initial laboratory analysis, to classify whether wastes are potentially hazardous***.

1. Waste Stream No. 1 is the Detonation Chamber residue that includes the metallic munitions fragments and ash from the deflagration/detonation in the destruction process. The waste stream is assumed free from agent contamination by U.S. Army requirements that allow release to public due to the waste residue being treated for greater than 15 minutes at temperatures that exceed 1,000°F. The EDT Facility claims the RCRA recycling exclusion and plans to recycle this waste. Waste may contain increased concentrations of RCRA metals due to the concentrating effect of the process. Following treatment in the chamber, the waste will be removed, vibrated and shaken during processing to reduce visible debris and allow recycling. Ash, particulates, and other residue separated from the scrap metal will be analyzed and possibly included with Waste Stream No. 6.
2. Waste Stream No. 2 is agent-contaminated, based upon the RCRA Mixture and Derived-From Rules [40CFR 261.3(a)(2)(iii)] for hazardous waste and would include for this waste stream, but not be limited to, personal protective equipment (PPE), trash, rags, munitions dunnage and operations & maintenance waste that may have contacted agent, or represent a hazard from other known conditions. Generator knowledge, visual observation, and air monitoring results will be used to determine if the item is agent-contaminated.
3. Laboratory-generated wastes may be classed as hazardous by exhibiting characteristic or toxic data. Changes to laboratory procedures and/or reagents may change the laboratory waste stream. Waste Stream No. 3 is laboratory-generated analytical wastes and solvents from the testing for agent and byproduct contamination. In addition, laboratory analytical wastes and samples may be N003 wastes based upon the RCRA Mixture and Derived-from Rules cited for Waste Stream No. 2.
4. Miscellaneous wastes comprise Waste Stream No. 4 and include, but may not be limited to, oils, hydraulic fluids, paints, solvents, and other wastes that exhibit characteristics of ignitability, corrosivity, reactivity, or toxicity due to the chemical composition of the materials. Wastes may include those from agent contact that become agent-derived Kentucky listed wastes (N003).

1

This document contained Export Control/International Traffic in Arms Regulations Information.

5. Waste Stream No. 5 is the liquid waste generated from the Off-Gas Treatment System (OTS) Scrubbers. The laboratory will conduct analyses to characterize initially this waste stream for toxicity based upon RCRA metals content. This waste stream and subsequent waste streams in the OTS are considered agent-derived waste (N003) due to the RCRA Mixture and Derived-from Rules.
6. Waste Stream No. 6 is comprised of the solids from the buffer tank. These wastes may contain increased concentrations of RCRA-regulated metals due to the concentrating effects of the OTS processes. The laboratory initially will characterize these wastes. This waste stream is considered agent-derived waste (N003) due to the RCRA Mixture and Derived-from Rules.
7. Waste Stream No. 7 includes dry salts and particulates from the spray dryer. As with the other post-detonation waste streams, the spray dryer waste stream may contain increased concentrations of RCRA-regulated metals due to the concentrating effects of the salt formation. The laboratory initially will characterize these wastes. This waste stream is considered agent-derived waste (N003) due to the RCRA Mixture and Derived-from Rules.
8. Waste Stream No. 8 includes particulates and vapors adsorbed to the carbon filters, HEPA filters, and pre-filters from the filter bank. Possible chemicals on the filters include the RCRA-regulated metals, and several of the RCRA-regulated organics. This waste stream is considered agent-derived waste (N003) due to the RCRA Mixture and Derived-from Rules.
9. Waste Stream No. 9 includes particulates, dusts, and metal oxides removed by the bag house filters. This waste stream is considered agent-derived waste (N003) due to the RCRA Mixture and Derived-from Rules.

1

2

This document contained Export Control/International Traffic in Arms Regulations Information.

Part B: Facility Description [401 KAR 38:090, Section 2 & 40 CFR 270.14]

The Blue Grass Chemical Agent-Destruction Pilot Plant (BGCAPP) Main Plant is being constructed by the Department of Defense (DOD) and United States (U.S.) Army for the purpose of destroying chemical agent-filled munitions stored at the Blue Grass Army Depot (BGAD). The stockpile of chemical agent items includes munitions filled with approximately one gallon of vesicant/blister agent (designated as H agent also called Mustard agent) and two Department of Transportation (DOT) bottles containing mustard. Although BGCAPP Main Plant was intended for destruction of all chemical munitions stored at BGAD, including the mustard agent-filled items; recent information from processing experience at the baseline chemical weapons destruction facilities (CWDFs) indicates a significant number of the mustard munitions will not be amenable to the normal BGCAPP Main Plant processes. Onsite analysis documented within the November 2011 ~~X~~-Ray Assessment of 155mm Mustard Projectiles Stored at Blue Grass Army Chemical Activity, Richmond, Kentucky," confirmed the presence of ~~h~~heel" material (solid or semi-solid materials resulting from degradation and breakdown of the agent) in a significant number of the mustard-filled projectiles stored at BGAD. This Class 3 Modification Request to the BGAD RCRA Permit proposes the addition of explosive destruction technology (EDT) as an alternative means to destroying these munitions (i.e., projectiles containing the chemical warfare agent, Mustard) and the two DOT bottles/containers. These projectiles and DOT bottles currently are stored onsite at the BGAD in the BGCA storage area.

This Class 3 RCRA Permit Modification Request identifies the Static Detonation Chamber (SDC) as the EDT unit selected for destruction of these items. The SDC (40 CFR, Subpart X--Miscellaneous Units) will be located and operated within the confines of the BGAD. Other areas and activities in this RCRA Class 3 Permit Modification Request include:

a. Addition of a container storage area (Service Magazine) for storage of the items to be destroyed in proximity to the SDC (40 CFR Subpart I—Use and Management of Containers); and

b. Transportation of the stored projectiles, over-packed projectiles, and DOT bottles containing Mustard agent from the BGCA storage igloo apron to the Service Magazine and from the Service Magazine to the EDT Facility for destruction [KRS 224.50-130(5)].

The EDT Facility will be located along the southern boundary of the BGCAPP Main Plant being constructed on the BGAD. The EDT Facility will store and treat these state-listed hazardous wastes under both Federal and Commonwealth of Kentucky hazardous waste regulations. Through this modification request, both the BGAD as the owner and Bechtel Parsons Blue Grass (BPBG) Team as the operator request this storage and treatment facility be added to the current BGAD RCRA Hazardous Waste Permit as a separate RCRA facility.

The format of this request for a Class 3 RCRA Permit Modification includes new Parts for the existing BGAD permit that mirror the structure of the Kentucky Department for Environmental Protection (KDEP) Part B Permit Application Review Checklist. This format includes applicable Kentucky Administrative Regulation (KAR) sections with the corresponding Code of Federal Regulations (CFR) citations also identified to allow a more efficient regulatory review of this request for BGAD RCRA Permit Modification.

This document contained Export Control/International Traffic in Arms Regulations Information.

B-1: General Description [401 KAR 38:090, Section 2 & 40 CFR 270.14(b)]

The BGAD is located in the Blue Grass region of east central Kentucky in the approximate center of Madison County. The BGAD encompasses 14,596 acres and is approximately 30 miles southeast of Lexington, 85 miles southeast of Louisville, and 90 miles south of Cincinnati, Ohio. It is adjacent to the southeastern portion of Richmond, Kentucky, approximately 5 miles southeast of the center of Richmond and 10 miles northeast of Berea, Kentucky (Figure B-1).

The installation includes a variety of buildings, structures, and undeveloped areas. The BGAD is located in the Outer Blue Grass Subdivision of the Blue Grass physiographic region. The topography of the Outer Blue Grass Subdivision includes moderately undulating to gently rolling hills that steepen near major streams. The BGAD has open fields and rolling hills with gentle slopes dotted with woodlots of varying sizes. The BGAD is surrounded by agricultural, industrial, low-density residential, commercial, and public land use areas. The public uses of land in the BGAD/Richmond area include educational and recreational activities and areas.

The BGAD, a Federal facility, is a Tier I Joint Munitions & Lethality Life Cycle Management Command (JM&LLCMC) Depot with a primary function of providing munitions, chemical defense equipment, and special operations support to the U.S. Department of Defense (DOD). As a Tier I facility, the BGAD is staffed to store conventional (i.e., non-nuclear and non-chemical) munitions for training and major force deployment. The BGAD is also the U.S. Army's major storage site for chemical defense equipment. The conventional munitions operations at the BGAD include shipping and receiving, storage, maintenance, inspection, and demilitarization.

In addition to conventional munitions, the Army began to store chemical weapons at the Blue Grass Installation in 1944. The BGAD began to receive shipments of modern chemical weapons in 1952, and receipt of chemical weapons continued until the mid-1960s. Since the mid-1960s, BGAD‘s mission has included the safe storage of existing chemical weapons.

In 1996, the Army established the Blue Grass Chemical Activity (BGCA) as a special unit focused on the management and storage of chemical weapons on the BGAD. The Blue Grass Chemical Activity (BGCA) is a tenant organization of the BGAD. The primary mission of BGCA is the safe storage and monitoring of the chemical weapons stockpile located within the Chemical Limited Area (CLA), a highly secured 250-acre site in the northern part of the BGAD.

The BGCAPP Main Plant, another tenant of BGAD, is located wholly within the BGAD‘s boundary. The BGCAPP Main Plant has its entrance from Kentucky (KY) Highway 52 and is approximately 19 acres in size. The BGCAPP Main Plant is being constructed and will be operated by the BPBG Team to destroy the chemical weapons stockpile stored at BGAD by BGCA, including chemical weapons, process wastes, and secondary wastes. Construction and initial operation of the BGCAPP Main Plant will be under a research program permitted under the Research, Development, and Demonstration (RD&D) Kentucky Permit number KY8-213-820-105 to ensure the integrated processes function efficiently and provide adequate levels of waste treatment and management.

This document contained Export Control/International Traffic in Arms Regulations Information.

The EDT Facility is being constructed to treat the mustard (also identified as H) agent munitions (i.e., M110, 155mm H-filled projectiles) and mustard-containing DOT bottles stored by BGCA. These items initially were planned for treatment in the BGCAPP Main Plant; however, it was determined subsequently that accessing the chemical agent within the munitions for destruction would be extremely difficult due to solidifying of the agent and corrosion within the burster well assembly, which prevented accessing the agent cavity using robotics. Worker and public safety concerns have caused the U.S. Army to seek alternative methods for destruction of the entire inventory of the H-filled munitions and two DOT bottles containing Mustard stored by BGCA. The SDC was selected for destruction of these items.

The Commonwealth of Kentucky has listed the chemical agent H as a hazardous waste [401 KAR 31:040, Lists of hazardous waste, Section 7 – Additional Requirement Concerning Nerve and Blister Agents (Waste Number N003)]. In addition, processing of this agent and the H-filled projectiles and DOT bottles may produce other hazardous wastes (e.g., Waste Numbers: D001, D003, D004, D005, D006, D007, D008, D009, D010, D011, D022, D026, D027, D028, D029, D030, D039, D040, F001–F005, and/or N003), and laboratory and maintenance activities add other wastes (e.g., Waste Numbers: D001, D002, D003, D004, D005, D006, D007, D008, D009, D010, D011, D022, D026, D027, D028, D029, D030, D037, D039, D040, F001–F005, and/or N003).

The EDT Facility will operate under the BGAD RCRA Hazardous Waste Permit (with the BPBG Team as the operator) and will treat and/or dispose (offsite) of secondary waste (i.e., wastes generated secondary to actual SDC process). Secondary waste includes items such as containers, equipment, personal protective equipment (PPE), munitions dunnage, and rags/wipes potentially contaminated with mustard agent during normal operations. Part C (next section of this permit modification request) describes the waste identification process for both process and secondary wastes.

B-2: Topographic Map [401 KAR 38:090, Section 2(17) & 40 CFR 270.14(b)(19)]

Figure B-1 is a topographic map of BGAD and surrounding area showing the general location of the BGAD. This map (supplemented by the other figures identified below) contains the features described below.

1. Map Scale, Orientation, and Date Prepared

Due to the size of the facility and the need to show surrounding areas in these figures, the BGAD is requesting KDEP approve the alternative map scale in this Permit Modification Request. Figure B-2 contains a north arrow and the date the figure was prepared.

2. Contour Lines

Each contour line on figures in this Permit Modification represents a change in elevation of 20 feet. These contour lines are sufficient to show surface water flow near the EDT Facility.

3. 100-Year Floodplain

The EDT Facility (adjacent to the BGCAPP Main Plant) is located within the Flood Insurance Program Zone X. This zone represents areas outside those affected by 500-year flood events, and therefore is not part of the 100-year floodplain. A portion of the Flood Insurance Rate Map for Madison County (i.e., showing the immediate vicinity of the EDT Facility) is included as Figure B-3.

This document contained Export Control/International Traffic in Arms Regulations Information.

4. Surface Waters

Figure B-2 shows major surface water features in blue and the dry weather and intermittent streams on the BGAD and in the lower areas near the EDT Facility and BGCAPP Main Plant.

5. Surrounding Land Use

The BGAD surrounds the EDT Facility, and the U.S. Army currently uses the BGAD primarily for industrial and related activities that are associated with the storage and maintenance of conventional and chemical munitions. The installation includes a variety of buildings, structures, and undeveloped areas, with over 1,100 structures located on the BGAD.

Land use around the BGAD should remain relatively constant in the future, with agriculture remaining an important land use. Madison County contains more than 1,400 farms covering more than 218,000 acres [U.S. Department of Agriculture (USDA) and KY 2007 Agriculture Census database]. The main trend emerging in the area near the BGAD is the conversion of small blocks of farmland to residential and light industrial use. Depending on economic conditions and the success of industrial parks located near the BGAD, this trend, coupled with increasing residential development and use, will probably continue in coming years. Figure B-2 shows the land use around the EDT Facility and the BGAD based upon land use information from the Madison County Comprehensive Plan, 2006.

6. Wind Rose

Figure B-4 displays a recent, 5-year wind rose for the BGAD. The highest wind velocities and most prevalent wind directions are from the southwest quadrant to the northeast quadrant. The nearest BGAD northeast quadrant boundary is more about one mile from the EDT Facility.

7. Legal Boundaries

Figure B-1 and Figure B-2 include the BGAD legal boundaries; Figure B-2 shows the boundaries for the BGCAPP Main Plant and the EDT Facility within BGAD.

8. Location of Access Control

Figure B-2 shows the BGAD entrance for the BGCAPP Main Plant. This access point is through a BGAD controlled gate. All personnel proceeding beyond this point are required to show U.S. DOD-issued photo identification passes. The access to the EDT Facility will require entry through the BGAD Restricted Access perimeter. Areas used for RCRA chemical agent storage or processing within the EDT Facility are fenced and closely monitored. The U.S. Army authorizes use of force to prevent unauthorized entry into the EDT Facility during chemical agent operations.

9. Onsite and Offsite Injection and Withdrawal Wells

Injection or withdrawal wells are not located near the BGCAPP.

10. Buildings/Structures

Figure B-5 shows the buildings and structures associated with the EDT Facility. There are no established public recreational areas near the EDT Facility.

11. Sewers and Outfalls

There are no EDT Facility sewers designed to carry process wastes. The BGAD wastewater treatment plant provides treatment of the EDT Facility sanitary wastewaters prior to discharge to the surface waters of the Commonwealth.

This document contained Export Control/International Traffic in Arms Regulations Information.

12. Loading and Unloading Areas

Figure B-5 shows the EDT Service Magazine (this area also is called the ESM, and may be referred to as the ~~S~~Service Magazine"), where the mustard-filled items [i.e., M110 155mm projectiles, over-packs, and DOT bottles (standard Department of Transportation 3A bottles)] will be unloaded after being transported from the BGCA storage locations for treatment in the EDT Facility. The Service Magazine provides storage of these hazardous waste (state-listed) items prior to movement to the EDT Facility for processing. This modification requests the Service Magazine be identified as a hazardous waste RCRA container storage area. RCRA regulations define storage as: ~~t~~the holding of hazardous waste for a temporary period at the end of which the hazardous waste is treated, disposed of, or stored elsewhere" (40 CFR 260.10). Hereafter the use of the word ~~s~~storage" refers to the RCRA definition of storage. The permitting of this facility allows storage in the Service Magazine for greater than 90 days (e.g., during an unforeseen long-term maintenance outage).

13. Fire Control Facilities

Fire control facilities provided for the EDT Facility include a sprinkler system inside the EDT Enclosure Building (EEB) and fire hydrants accessible to responding fire personnel for control of fires within the EDT Facility.

14. Flood Control or Drainage Barriers

The EDT Facility is located in Flood Zone X, which is an area of remote flood hazard that is determined to be outside the 500-year flood plain. Given its location within the flood zone, flood control barriers have not been provided for the EDT Facility. The drainage from the EDT Facility is directed to the nearby detention basin used to capture storm water runoff from the BGCAPP Main Plant.

15. Runoff Control Systems

The BGCAPP Main Plant provides runoff control via a storm water collection and discharge system. This system consists of the facility storm sewers and storm water discharges. The detention basin collects and controls EDT Facility and BGCAPP Main Plant runoff.

16. Locations of Hazardous Waste Units

Figure B-5 identifies the location of EDT Facility munitions storage area (i.e., Service Magazine) and the processing building. Hazardous waste cleanup areas or hazardous waste disposal areas do not exist within the EDT Facility boundaries.

17. Access and Internal Roads

The initial access road to the EDT Facility is via KY Highway 52 as shown on Figure B-1, EDT Facility Location, Figure B-2, Surrounding Land Use, and Figure B-5, Facility Layout. Internal BGAD roads used for transport of materials and waste are discussed later in this Part.

B-3: Location Information [401 KAR 34:020, Section 9(1) and (2); 38:090, Section 2 (20) and Section 3 & 40 CFR 270.14(b)(11), and 270.14(b)(11)(i through v)]

B-3a: Geological Information

This section addresses the geology of the area upon which the EDT Facility is located, to include the seismic characteristics, subsurface geology, and karst features of the area.

This document contained Export Control/International Traffic in Arms Regulations Information.

B-3a(1): Seismic Consideration

The EDT Facility is located in Madison County, Kentucky, and is not listed in either 401 KAR 34:340 or Appendix VI of 40 CFR Part 264. A minor fault (Tate Creek Fault) lies approximately 1,500 feet to the south of the EDT Facility and southern boundary of BGCAPP Main Plant and Figure B-6 identifies its location. However, Blume (Jacobs Engineering Group, Inc., and URS/John A. Blume and Associates, Engineer) conducted a geological study and seismological investigation of the facility location in 1987 and concluded the following:

"BGAD is located in a tectonic domain generally referred to as the Kentucky River Fault System. No faults in the region are known to have displaced geologically younger materials (Pleistocene and Holocene Ages), even though a number of older faults have displaced Paleozoic Era (400 million years ago) formations. Additionally, there are no indications of faults that are capable or potentially capable within the region."

Based upon this information, further action is not required to demonstrate compliance with the RCRA seismic standard.

B-3a(2): Subsurface Geology and Karst

A Department of the Interior United States Geological Survey, Geologic Quadrangle, Moberly Quadrangle is included as Figure B-6. The subsurface consists of limestone, dolomite, shale, and recent alluvium. The Ashlock Formation (Ordovician) divides into upper and lower although both are predominantly limestone. The Ashlock occurs in the central and western part of the BGAD. The Drakes Formation, Upper Ordovician, is dolomite and prevails throughout the installation. The Brassfield Dolomite (Lower Silurian) occurs in small areas along the southeast boundary. Silurian and Devonian rocks, composed of shale and dolomite, occur as small remnants along the southeast boundary. Recent deposits consisting of clay and silts floor the drainage ways. Figure B-7 identifies the soil types.

The Drakes Formation, made up of dolomite, limestone, and shale, underlies most of the BGAD and the area around the EDT Facility and BGCAPP Main Plant. The lower part of the Ashlock Formation is beneath a small portion of the BGAD (near the western boundary).

Although limestone and dolomite primarily underlie the BGAD, Karst topographic features are not well developed or widespread. High content of clay in the limestone has limited solution weathering. In addition, the EDT Facility design incorporates features that prevent release of contaminated liquids into the underlying geology.

B-3b: Floodplain Requirements

A portion of the Flood Insurance Program Map for Madison County is included as Figure B-3. This map clearly shows the EDT Facility is not part of the 100-year floodplain. The location of EDT Facility is actually within an area outside those affected by 500-year flood events.

B-4: Traffic Information [401 KAR 38:090, Section 2(10) & 40 CFR 270.14(b)(10)]

The transport of hazardous waste from BGCA storage is performed using motorized vehicles only. Hazardous waste is transported both into and away from the EDT Facility either over existing BGAD paved roads or Kentucky highways. During hazardous waste processing, material handling equipment (MHE) will be used to move mustard-filled munitions and the DOT bottles within the EDT Facility.

This document contained Export Control/International Traffic in Arms Regulations Information.

Estimated Traffic Volume (number, type of vehicles)

Enhanced onsite containers (EONCs) will be used to transport agent-filled projectiles, over-packs, and DOT bottles from the BGCA storage igloos to the Service Magazine located near the EDT Facility. These EONCs will be mounted on specialized trailers and pulled by truck to the Service Magazine. On a daily basis, EDT Facility personnel will transport up to eight EONCs of this hazardous waste (H-filled munitions) to the Service Magazine during daylight hours.

In addition to transport of chemical weapons/agent from storage, transport of other hazardous wastes will be within the EDT Facility or north on the access road to KY Highway 52 (see Figure B-8) for offsite transport. During EDT Facility operations, it is estimated an additional 40-50 privately owned vehicles would enter and leave from the Main Plant parking area each workday. This additional traffic due to privately owned vehicles will occur seven days per week and twice per day for the 12-hour shift changes. Each day, it is expected one or two trucks will carry scrap metal and/or waste materials from the EDT Facility. The trucks that will be used in scrap metal/waste transport include flatbeds, box trucks and various types of tractor/trailer/tanker or roll-off combinations.

Traffic Pattern

The major highways serving the EDT Facility and BGCAPP Main Plant are I-75 (running north/south), KY Highway 52 (running east/west), and US 25 (running north/south). The main access is from KY Highway 52 by way of a 24-foot wide paved road with 10-foot shoulders. EDT Facility personnel and other authorized vehicles use this road to access the BGCAPP Main Plant site. The outward movement of all hazardous wastes is to KY Highway 52. This access supports operations at the BGCAPP Main Plant and access to the parking area for EDT Facility personnel. The road enters the mid-northern boundary of the BGAD.

Access to the EDT Facility requires entry into BGAD, which is controlled by the U.S. Army.

Figure B-8 shows the traffic pattern for EDT Facility hazardous wastes, materials and personnel. EDT Facility hazardous wastes are transported from the facility to KY Highway 52 for offsite transport to appropriately permitted, commercial treatment, storage, and disposal facilities (TSDFs).

Traffic Control Signals

Several methods and signals control traffic on the BGAD and at/around the EDT Facility:

a. All major road intersections have traffic control gates and stop signs.
b. All secondary road intersections have stop signs or yield signs.
c. Speed limits are well posted.
d. A stop light, installed at the intersection of KY Highway 52 and the access road at the entrance to the site, controls the safe flow of vehicle traffic into and from the site entrance.
e. The Restricted Area through which personnel and vehicles enter the BGCAPP Main Plant and EDT Facility is an area with guards controlling access.
f. The CLA is an area used to control access to chemical agent and chemical-filled munitions by personnel and vehicles proceeding into and around the EDT Facility during chemical agent handling and destruction.

This document contained Export Control/International Traffic in Arms Regulations Information.

Access Road(s) Surfacing and Load-bearing Capacity

The main access road to the EDT Facility is, in general, flat terrain with Class E roads. The construction of the access road meets the technical requirements set by the U.S. Army Corps of Engineers. The roads have 10-foot-wide lanes with a minimum cross-slope of 2 percent and 6-foot-wide gravel shoulders with a minimum cross slope of 6 percent.

The maximum load assumed for design is the American Association of State Highway Transportation Officials HS-20 loading 18,000-pound maximum axle load, 32,000-pound maximum axle group, and 72,000-pound maximum vehicle weight.

Stop and yield signs within and around the EDT Facility control traffic and entry into the munitions processing area. Personal vehicles are not allowed within the Restricted Area or CLA. Government vehicles that transport EDT Facility personnel are parked in designated parking lots, and do not interfere with traffic flow within the fenced facility.

B-5: Requirements for Applicants for Construction Permits [401 KAR 38:090, Section 2(18) and KRS 224.46 520(1)]

The need to reduce the risk presented by the aging H-filled, chemical projectiles has prompted this request for a RCRA Permit Modification. An Environmental Assessment (EA) was prepared and released for public comment by the U.S. Army (June 2013) for this significant federal action as required by the National Environmental Policy Act (NEPA). The document provided analysis of the proposed action to construct, systematize, operate, and close an EDT Facility on BGAD to destroy the projectiles, over-packs, and DOT bottles containing mustard. The EA also evaluated and determined the extent of any potential environmental impacts. The EA concluded there were not significant impacts associated with this proposed action. This EA analysis included assessment of:

a. Alternatives
b. Public health, safety, and environmental aspects
c. Social and economic impacts
d. Mitigation procedures
e. Relationship to local planning and development

The U.S. Army held a public meeting on July 16, 2013 to present the results of this EA, as well as solicit public comment and feedback on the document and the evaluation it contained. This public meeting was held in Richmond, Kentucky on the Eastern Kentucky University campus. Following this public meeting, an extension of the 30-day public comment period was requested and approved by the Army. Following the close of this comment period extension, a second public meeting was held on 24 October 2013 to provide and explain the Army responses to public comment.

B-5a: Alternative Analysis Plan

The EA described above evaluated the alternatives as described in Kentucky Revised Statute (KRS) 224.46-520 and the EA is proposed as an equivalent document.

This document contained Export Control/International Traffic in Arms Regulations Information.

B-5b: Specific Requirements for Incinerators and Disposal Facilities

The EDT Facility is not an incinerator or land disposal facility so the respective Federal and Commonwealth of Kentucky requirements do not apply.

B-6: Applicants Other than Interim Status - Other Documents [401 KAR 38:090, Section 2(20)(a)]

The EDT Facility is a new facility and has not previously received any civil fines or significant deficiencies on environmental compliance inspections. Since the Bechtel Parsons Blue Grass (BPBG) Team is a Joint Venture (JV) contracted to operate the BGCAPP Main Plant, these disclosure forms, key personnel statement forms, and disclosure statements have been previously provided as part of ongoing efforts under the RD&D Permit activities for the BGCAPP Main Plant.

B-7: Financial Responsibility to Construct and Operate [401 KAR 38:090, Section 2(24), KRS 224.40-325 & 40 CFR 270.14(b)(18), 264.145, 264.147, and 264.150]

Bechtel Parsons Blue Grass (BPBG) Team is the organization contracted to design, construct, and operate the EDT Facility for the Government owner. The design, construction, and operation of the EDTC Facility is under a Federal contract, located on land owned by the Federal government, and exempted as a Federal facility from providing financial assurance in accordance with 40 CFR 264.140(c) and as outlined in KRS 224.40-110.

B-8: Public Participation [401 KAR 38:050, Sections 14 and 38:090, Section 2(25) & 40 CFR 124.31]

A public meeting was held to introduce and explain this modification request (i.e., adding the EDT Facility). In a separate submittal, KDEP was provided the following:

a. A summary of the pre-permit modification request public meeting
b. A list of attendees and their addresses
c. Copies of written comments or materials submitted at the meeting

B-9: Fees [401 KAR 39:090, Sections 2 and 3, 39:120, & KRS 224.46-016 and 018]

An existing grant from Assembled Chemical Weapons Alternatives (ACWA) to KDEP includes monies to pay the fee for filing and review of this Class 3 BGAD RCRA Permit Modification. No additional monies are required.

1

Figure B-1: BGAD Location

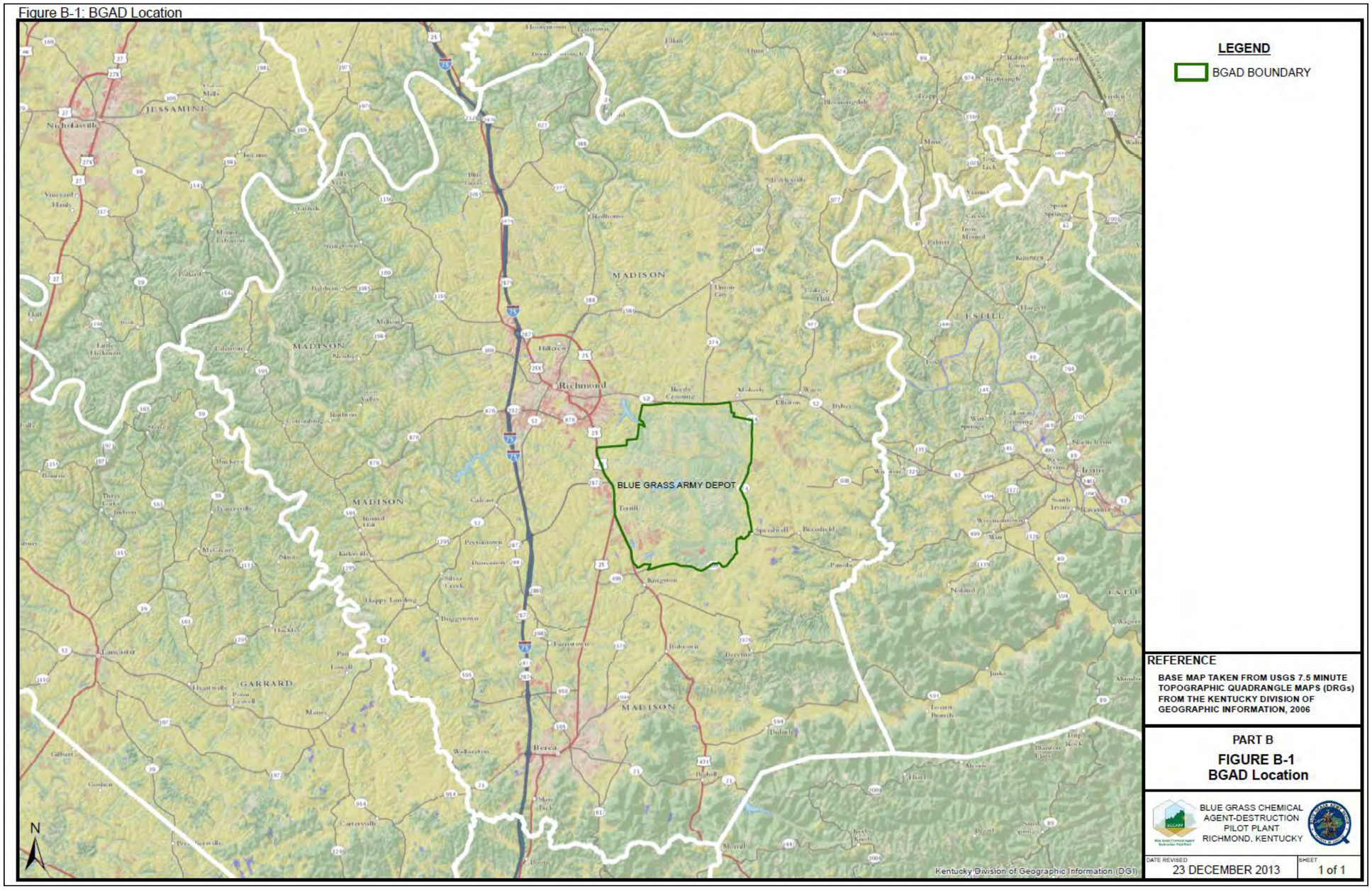

2
3

Figure B-2: EDT Facility Location and Surrounding Land Use

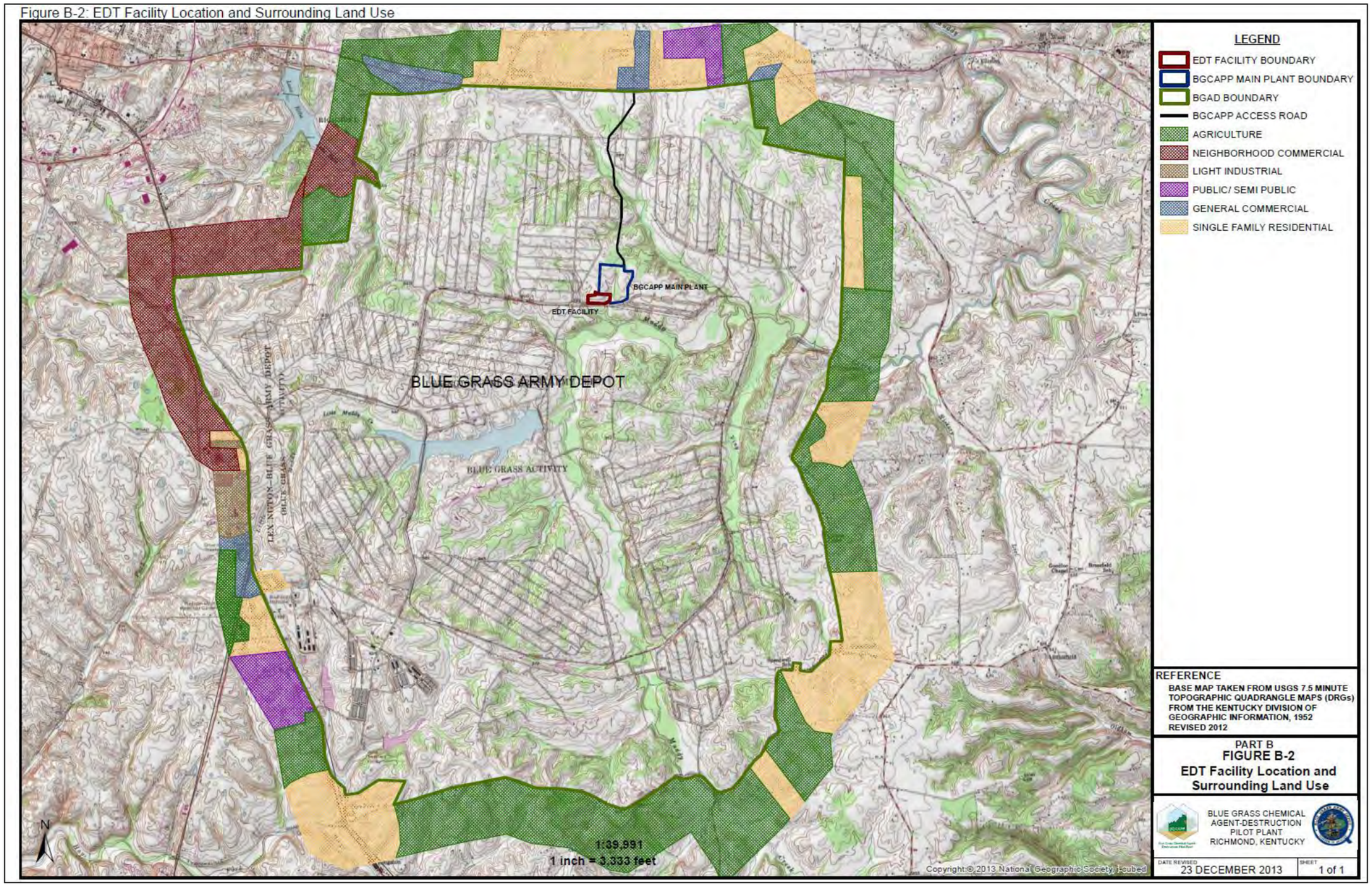

Figure B-3: Facility and Flood Zone

Figure B-3: EDT Facility and Flood Zone

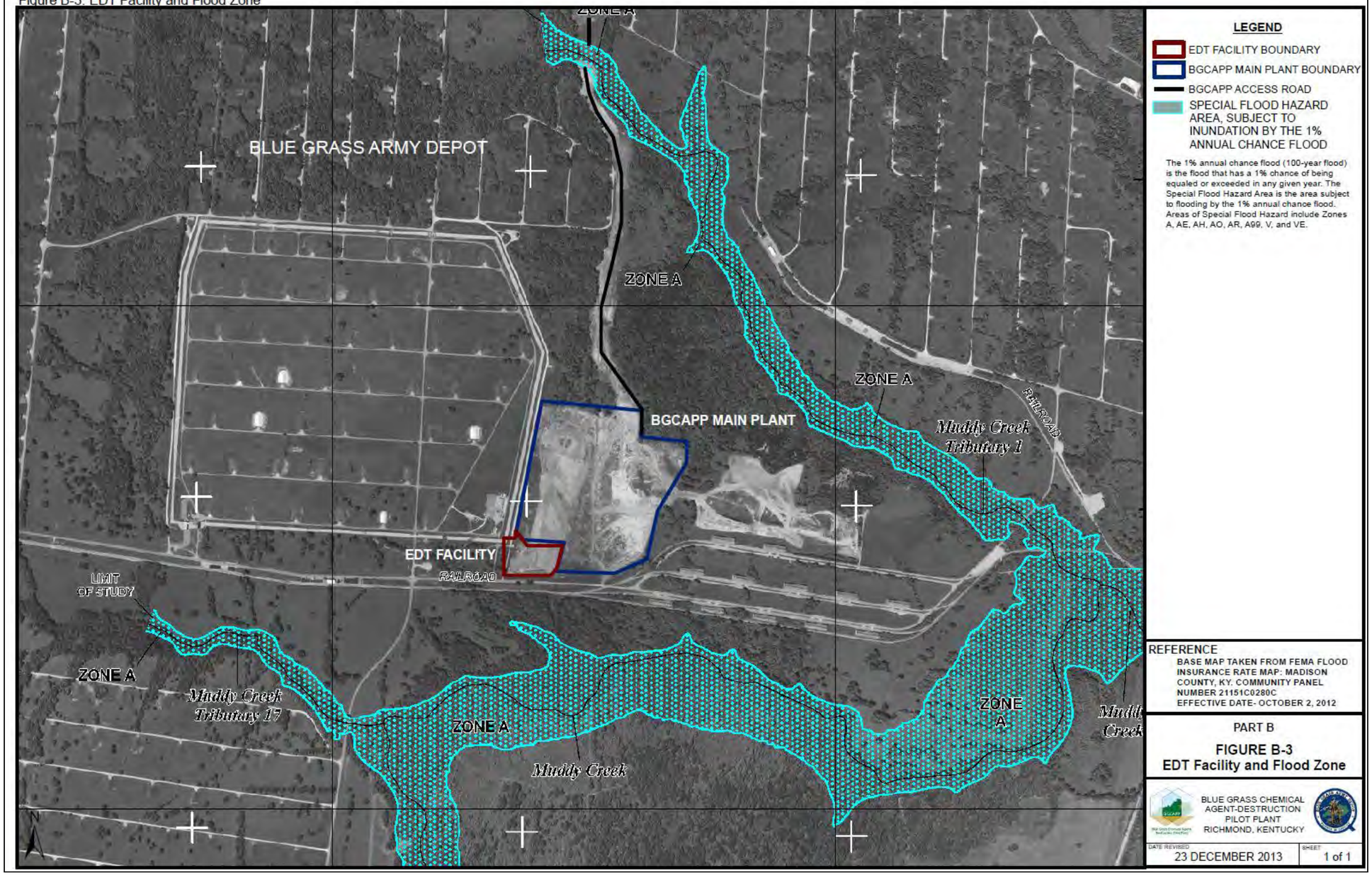

This document contained Export Control/International Traffic in Arms Regulations Information.

Figure B-4: Facility Wind Rose

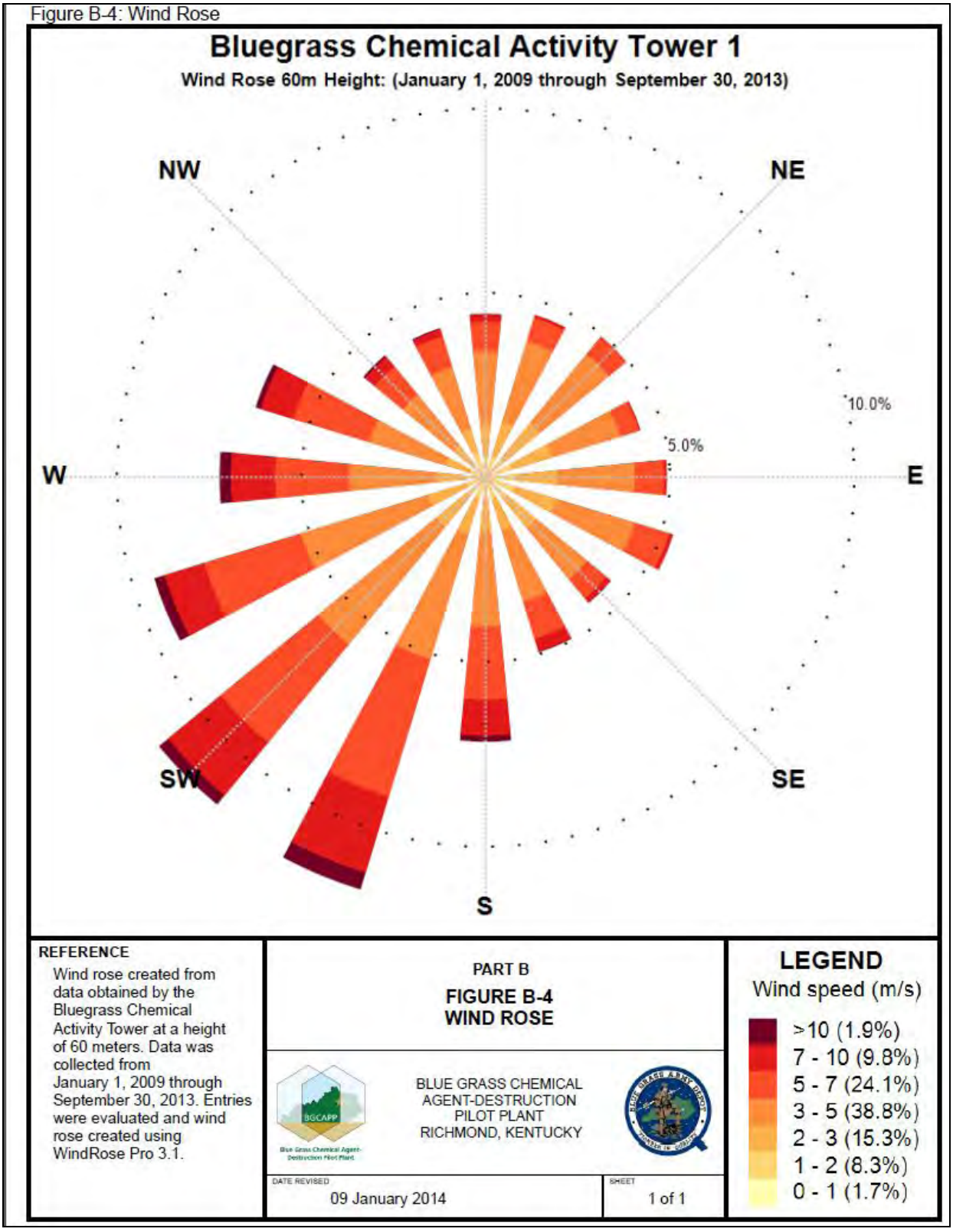

This document contained Export Control/International Traffic in Arms Regulations Information.

(SENSITIVE INFORMATION REMOVED)

1

Figure B-5: Facility Layout

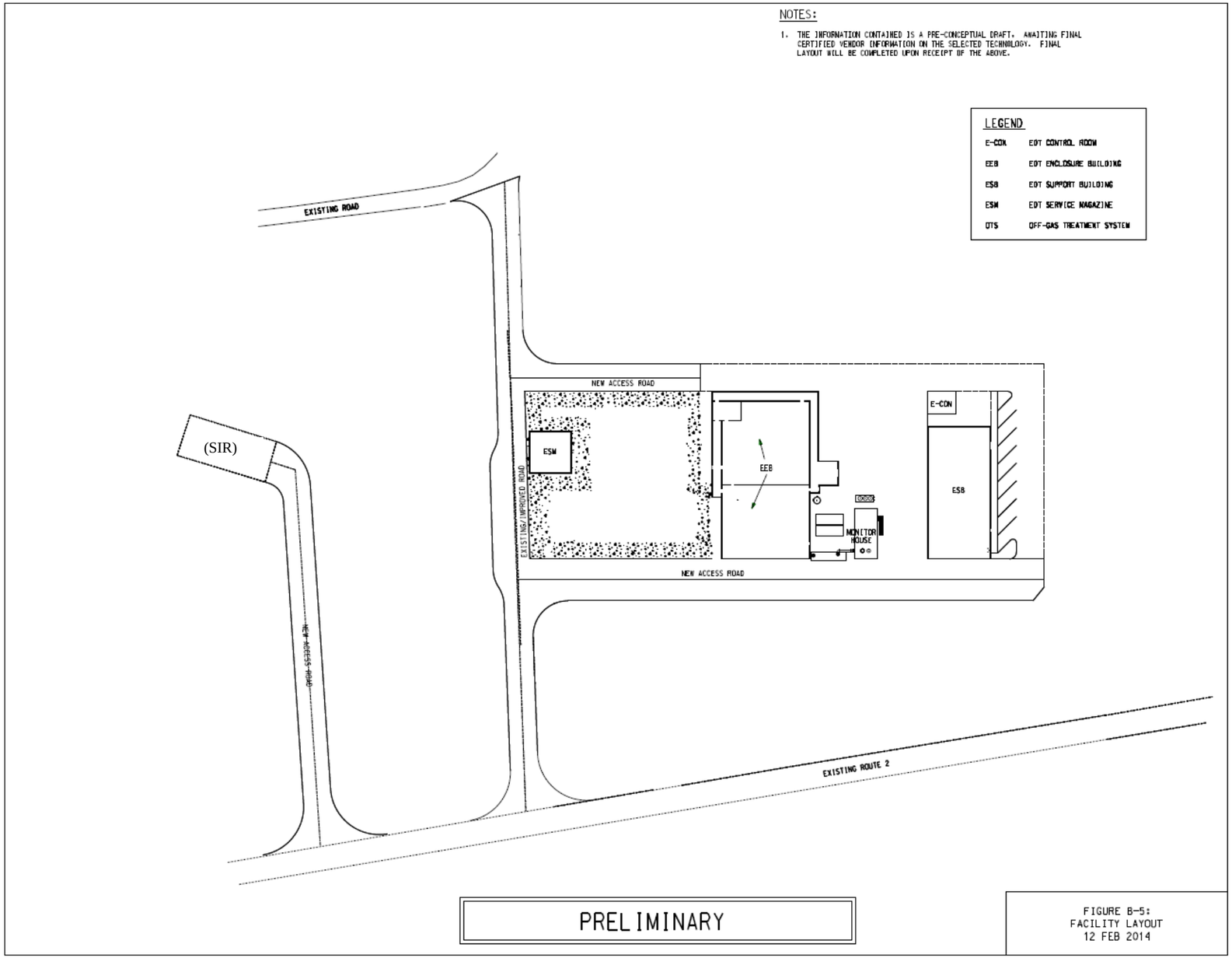

2

(SENSITIVE INFORMATION REMOVED)

1

Figure B-6: Geology Surrounding Facility

Figure B-6: Geology Surrounding EDT Facility

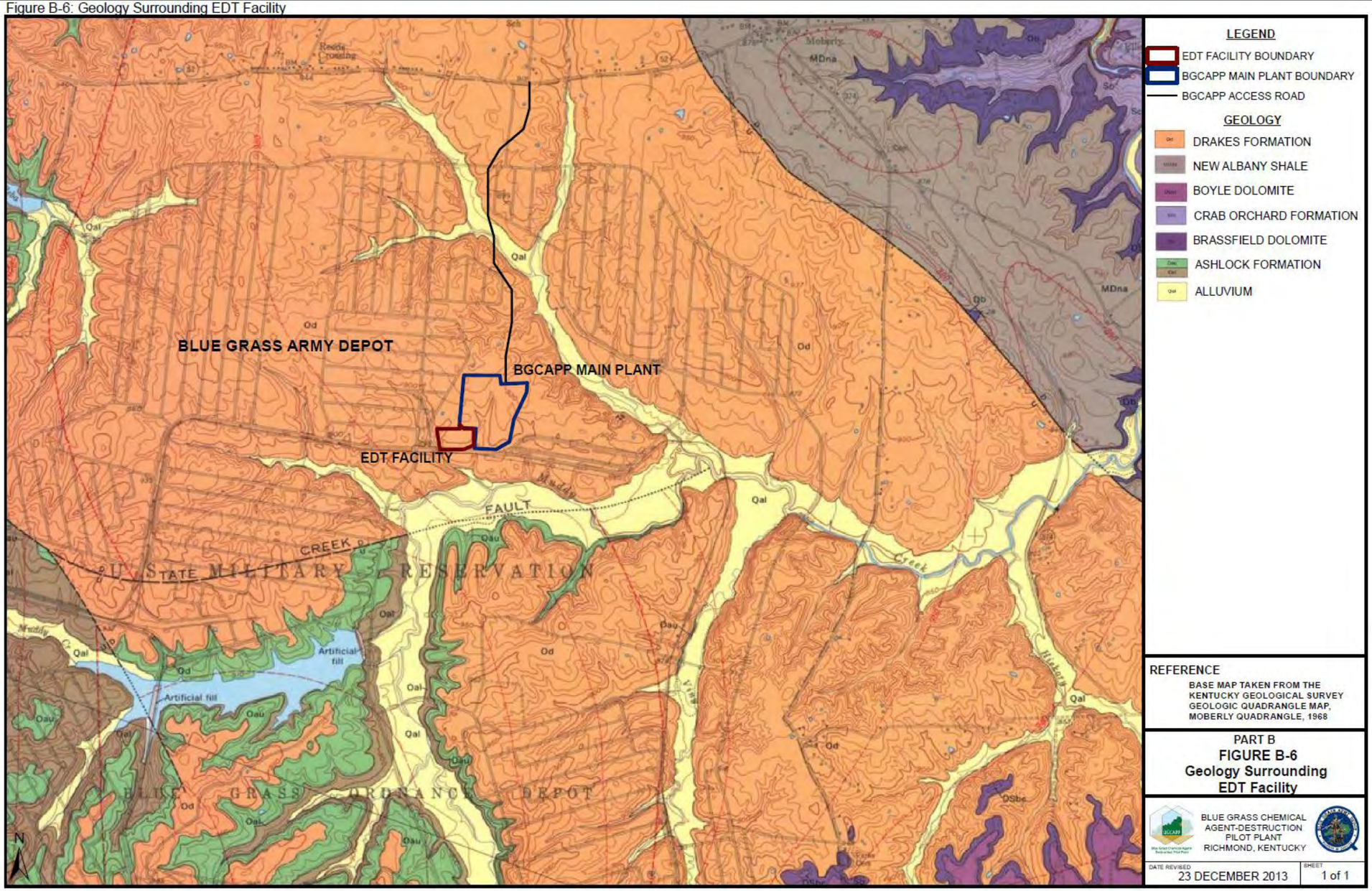

2
3

1

Figure B-7: Soil Types

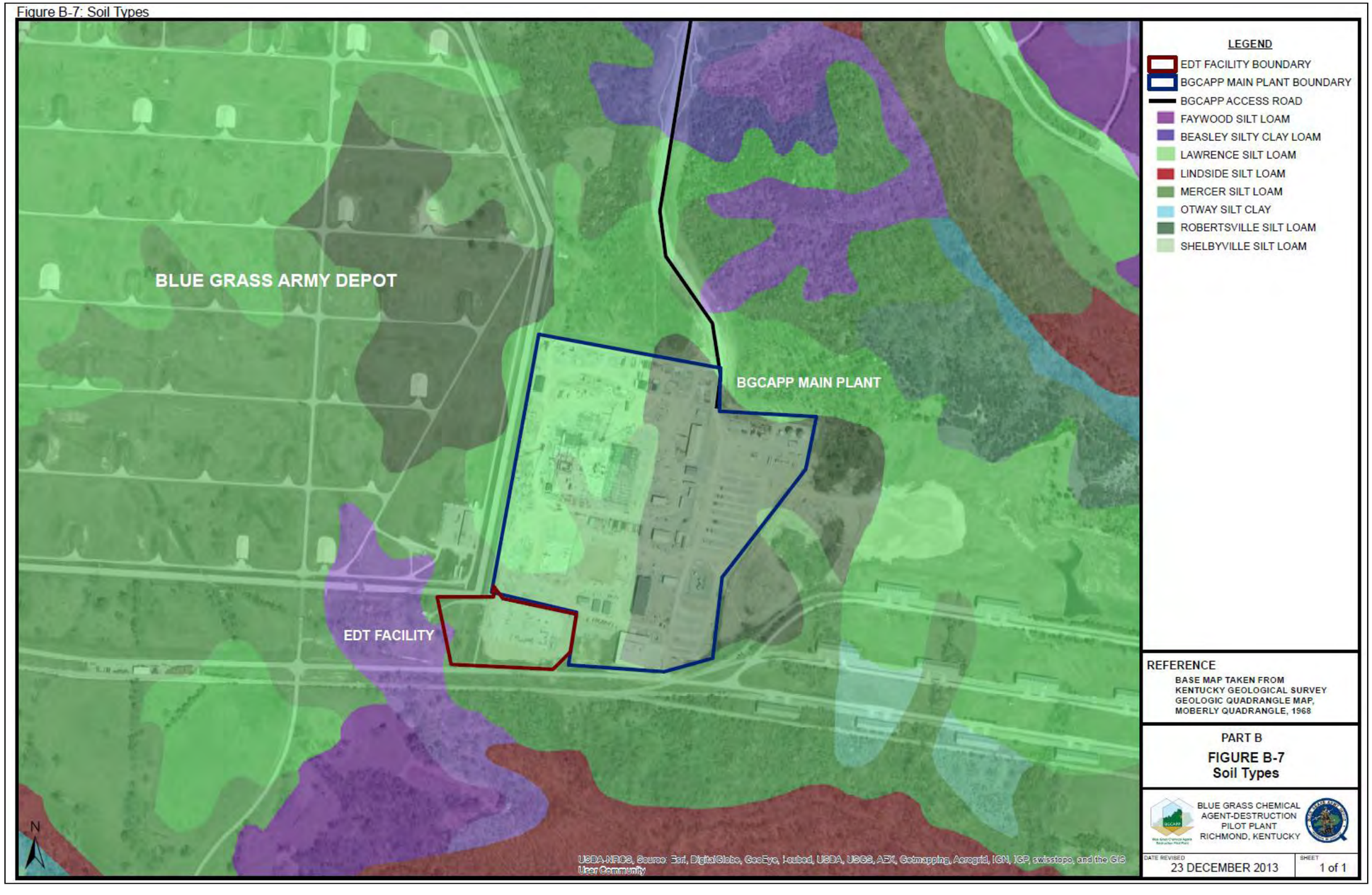

2
3

1

Figure B-8: Traffic Flow

Figure B-8: Traffic Flow

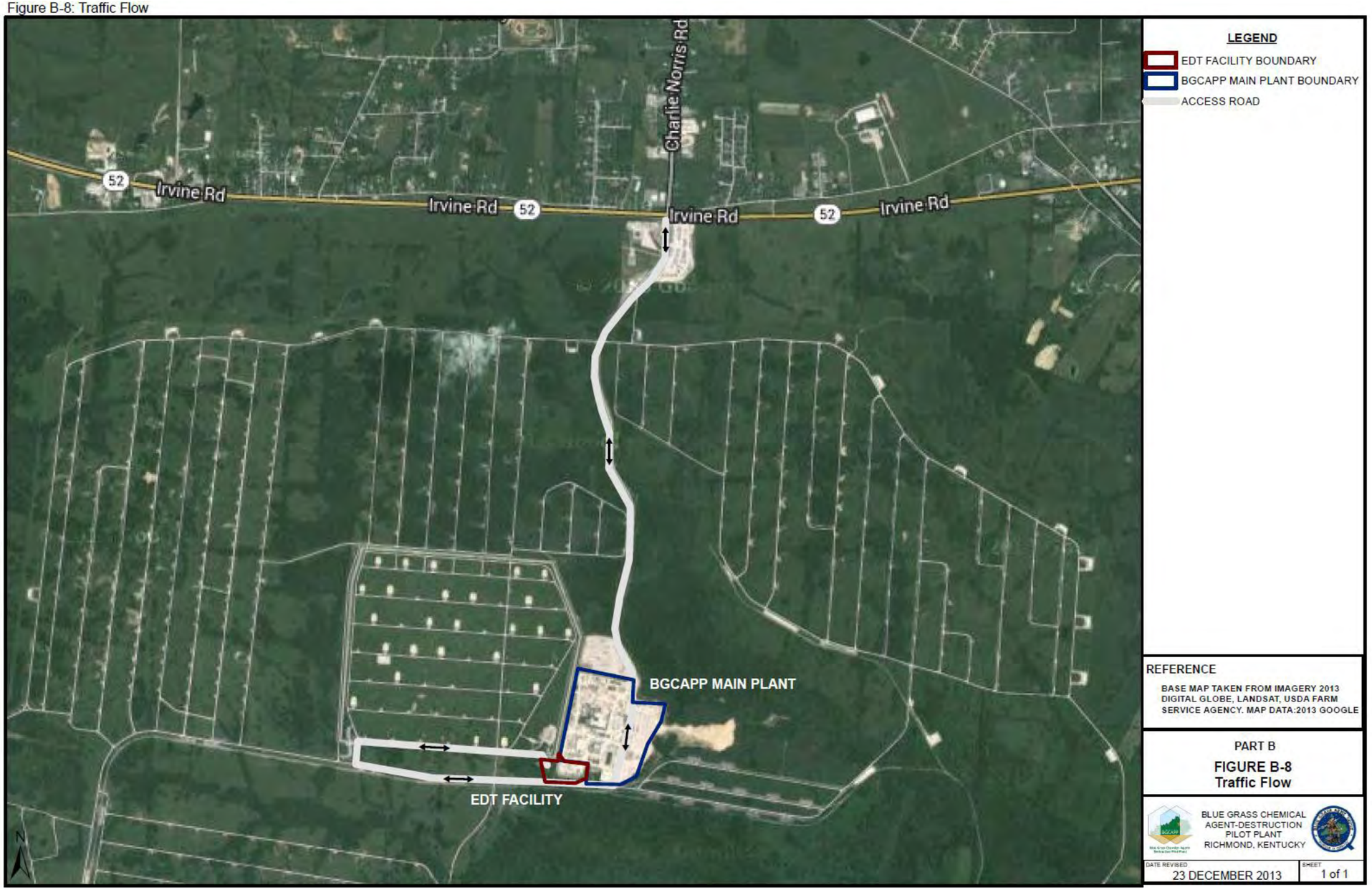

2

3

This document contained Export Control/International Traffic in Arms Regulations Information.

Part C: Waste Analysis Plan [401 KAR 38:090, Section 2(3), 34:020, Section 4 & 40 CFR 270.13(c) and 264.13]

This section discusses the chemical and physical characteristics of the wastes that are managed at the EDT Facility. Paragraph C-1 introduces the chemical and physical properties of the wastes. Paragraph C-2 presents the Waste Analysis Plan that details the methodologies for sampling, testing, and evaluating all wastes to ensure sufficient information is available for their proper characterization and safe management. This information also is used to ensure all wastes are treated in accordance with best-demonstrated available technology (BDAT) to maintain compliance with the land disposal restrictions (LDRs). Paragraph C-3 addresses waste analysis requirements pertaining to LDRs.

C-1: Introduction

The EDT Facility receives, from BGCA storage, projectiles, over-packs, and DOT bottles containing mustard agent, treats these wastes onsite, and transports generated waste streams offsite for treatment and/or disposal. The characterization criteria for each waste stream is based on process knowledge, previous analytical results obtained for similar waste streams at other chemical agent-disposal facilities, the homogeneity of the waste, the ability to obtain a representative waste stream sample, LDR notification requirements, and/or DOD manufacturing specifications.

The assembled chemical munitions to be destroyed in the EDT Facility are stored by BGCA and contain both a chemical agent (mustard agent) and energetic materials (in the form of an explosive burster). The specific munitions to be destroyed are designated M110 155mm chemical projectiles, which contain the mustard agent and energetics in the ~~b~~burster" of each projectile. The ~~b~~burster" energetics was designed to cause the projectile to split open and disperse the chemical agent. In addition, the selected EDT will be used to destroy stockpile-derived mustard agent stored in two DOT bottles.

The U.S. Army knowledge of munitions design and the composition of the energetics, mustard agent, and munitions components are adequate for acceptance and treatment of the stored munitions by the EDT Facility [40 CFR 262.11(c)(2)].

The SDC process generates a variety of process and secondary waste streams during its operation.

a. Process Waste Streams – Process waste streams include SDC chamber residues, munitions bodies, ash, and particulates from the SDC chamber.
b. Secondary Waste Streams – Secondary waste streams produced are by-products of the SDC treatment processes and supporting activities (e.g., maintenance, laboratory analyses). These wastes include agent-contaminated or agent-derived wastes, as well as wastes that are or may be hazardous due to either a hazardous waste characteristic or listing (i.e., not agent-derived). These secondary wastes include:

This document contained Export Control/International Traffic in Arms Regulations Information.

(1) agent-contaminated/agent-derived wastes (e.g., agent-contaminated PPE, dunnage, agent-derived liquid and solid wastes generated in the OTS; spent activated carbon and filters, and agent-contaminated rags, trash)
(2) laboratory wastes possibly samples derived from mustard analyses
(3) maintenance and miscellaneous components/parts possibly contaminated with mustard
(4) oils possibly contaminated with mustard
(5) hydraulic fluids and paints not contaminated by mustard agent

The EDT Facility personnel place the remaining wastes into containers and store the containerized wastes onsite (e.g., <90-day storage in the EDT Facility) prior to offsite shipment to appropriately permitted, commercial TSDFs. Agent-contaminated wastes are initially decontaminated to an acceptable U.S. Army decontamination level prior to transport to a permitted, commercial TSDF for further treatment and/or disposal. See Appendix C-1 to this section for a description of headspace air monitoring for evaluating the risk to human health associated with agent contaminated wastes and U.S. Army decontamination levels.

The hazardous wastes received at the EDT Facility are chemical munitions that include both chemical agent (i.e., the mustard agent); and energetics (i.e., explosive in a ~~b~~burster" charge). Extensive generator knowledge (i.e., as defined by RCRA regulations) has been gained through the design and manufacture of these chemical munitions by the U.S. Army. Sampling and analyses of the chemical agent and energetics in these munitions have added to this generator knowledge. Generator knowledge of these chemical munitions, therefore, allows these hazardous wastes to be transported to and received at the EDT Facility without further sampling and analysis [40 CFR 262.11(c)(2)].

Table C-1 lists the waste streams with media type and waste characteristics with the rationale for the testing selected for each waste stream. This table also identifies the potential RCRA hazardous waste designation, and the U.S. Environmental Protection Agency (EPA) and the KDEP waste number(s) related to that waste. The hazardous waste streams generated and/or stored within the EDT Facility <90-day waste storage areas may include the following:

a. Agent-contaminated/agent-derived KY hazardous wastes to include the following:
   (1) SDC chamber residue (e.g., ash from munitions processing)
   (2) Scrap metal from SDC for recycling
b. Agent-contaminated/agent-derived KY hazardous wastes to include the following:
   (1) PPE
   (2) Agent-contaminated dunnage
   (3) Agent-derived wastes from the OTS including: solids from the buffer tank (due to the cyclonic effect), salts and particulates from the spray dryer, dust and metallic oxides from the bag house filters, and liquids/brines from the Scrubbers (i.e., if excess water is present and more than can be re-circulated or removed during maintenance of the system)
   (4) Agent-contaminated carbon media, high-efficiency particulate air (HEPA) filters and pre-filters
   (5) Agent-contaminated trash, rags, and components/parts from operations and maintenance (O&M) activities
c. Laboratory agent-contaminated wastes and spent solvents possibly derived from mustard analyses
d. Maintenance and miscellaneous wastes (oils, hydraulic fluids, paints, and spent solvents), which may be contaminated with mustard

This document contained Export Control/International Traffic in Arms Regulations Information.

The EDT Facility personnel will segregate these wastes in accordance with the waste characteristics and compatibility requirements and store these wastes in <90-day storage [40 CFR 262.34 and 401 KAR 32:030, Section 5, Accumulation time]. Characterization of the process and secondary wastes will include the application of the Mixture [40 CFR 261.3(a)(2)], Derived-from [40 CFR 261.3(c)(2)(i), (ii), and (iv)], Contained-in [40 CFR 261.3(f)(2)], Commonwealth of Kentucky incorporation of 40 CFR 261.3 [401 KAR 31:010, Section 3, Definition of Hazardous Waste] Rules, in addition to Generator Knowledge [40 CFR 262.11(c)(2) and 401 KAR 32:010, Section 2, Hazardous Waste Determination].

The PPE and other agent-derived hazardous wastes generated from the EDT Facility O&M activities may be placed in and contained in double plastic bags. These bagged wastes may be temporarily stored in temporary container storage areas (near the point of generation). The wastes are transferred from these temporary containers in DOT-approved containers prior to movement from the temporary storage location. The wastes remain in the double plastic bags when placed into the DOT-approved containers. The following paragraphs present supplemental information concerning these waste streams.

a. SDC Chamber Residue

The SDC chamber provides containment during and following the processing of the mustard-containing items. The materials remaining in the SDC chamber following deflagration or detonation of the M110 155mm H-filled projectiles includes both metal fragments from the projectiles, dusts, and residue. The metal fragments from the deflagration/detonation of these items will be held at 1,000°F or greater for more than 15 minutes due to the operating cycle of the SDC. The U.S. Army recognizes 1,000°F or greater for 15 minutes or more as a treatment standard for materials potentially contaminated with chemical agent and/or energetic material to be released to the general public. The large metal fragments from the projectile bodies, over-packed containers, and DOT bottles will be recycled and thus may be excluded from hazardous waste regulations [40 CFR 261.4(a)(13)] and 401 KAR 31:010, Section 4, Exclusions, (1)].

The remaining dust and residue from the SDC chamber that is collected in the Dust Collection System will carry the Commonwealth of Kentucky N003 hazardous waste number and also may carry additional hazardous waste numbers due to the metals concentrations in this waste stream (e.g., D004 through D011) due to the metals contained in the mustard and the metals associated with the projectiles and its various components and coatings. The applicability of these characteristic waste numbers will be determined based upon toxicity characteristic leaching procedure (TCLP) analysis of the dust and residue during initial operation of the SDC. If it is determined these characteristic waste numbers are applicable to the debris from the SDC, disposal of the SDC debris will comply with RCRA regulations for disposal and/or treatment.

b. Agent Contaminated/Derived KY Hazardous Wastes

Agent-Contaminated Personal Protective Equipment (PPE) – PPE includes impermeable suits, butyl rubber suits, masks, aprons, hoods, gloves, boots, and other equipment. These items may become agent-contaminated during use, and if designated as wastes, would carry the Commonwealth of Kentucky hazardous waste number — N003. The EDT Facility uses agent headspace monitoring and/or generator knowledge to characterize the risk to human healthy from these wastes.

This document contained Export Control/International Traffic in Arms Regulations Information.

Agent Contaminated Munitions Dunnage – Generator knowledge and/or agent headspace monitoring is used to determine whether chemical agent from leaking munitions provides a risk to human health and safety. The EDT Facility designates dunnage contaminated with agent as N003 wastes. These wastes also may contain the preservatives m-Cresol (D026) and pentachlorophenol (D037) above the regulatory levels (200 mg/L and 100 mg/L, respectively).

Agent-Derived Wastes from the Off-gas Treatment (OTS) – Agent–derived wastes from this system includes: solids from the cyclone, salts and particulates from the spray dryer, dust and metallic oxides from the bag house filters, and liquids/brines from the scrubbers.

Agent-Contaminated Spent Activated Carbon and HEPA Filters and Pre-filters – The first carbon bed is expected to have some level of agent-contamination and is designated as N003 waste(s). The initial HEPA filter and pre filter elements associated with the carbon banks also are designated as N003 wastes based upon generator knowledge. Monitoring between the carbon banks is used to determine whether the activated carbon downstream of the first carbon bed in the ventilation system has been contaminated with agent.

Agent-Contaminated Trash, Rags, and Components/Parts from O&M – Contaminated trash, rags, and components/parts from O&M activities may include any of the following materials:

(1) Metal items (e.g., pump components, piping components, valves, fittings, tools, munitions components, and other items) made of aluminum, steel, chromium, copper, brass, or alloys.

(2) Nonmetallic trash or parts (e.g., plastic hoses, plastic parts, rubber parts, polyvinyl chloride piping), nylon components, polyester materials, polyethylene materials, phenolic chemicals, thermoplastics, glassware, munitions dunnage, concrete, gasket materials, plaster, rags, and other disposable materials.

NOTE: The EDT Facility uses agent headspace monitoring and/or generator knowledge to characterize these wastes for hazards to human health and assign waste numbers (i.e., N003).

c. Laboratory Wastes

Laboratory support for EDT Facility operation results in the generation of a variety of laboratory hazardous wastes. These may include waste numbers D001, D002, D003, D004, D005, D006, D007, D008, D009, D010, D011, D022, D026, D027, D028, D029, D030, D037, D039, and/or D040; as well as listed wastes (e.g., F001–F005), and also include Commonwealth of Kentucky listed, agent-derived (i.e., N003) wastes.

Small quantities (<110 gallons) of liquid and solid wastes mixed with/derived from chemical agent (e.g., analytical standards, waste stream samples) may be temporarily stored (i.e., <90-days) within or outside the laboratory.

Both treated agent-related and non-agent hazardous wastes are stored in containers.

d. Maintenance and Miscellaneous Wastes (e.g., Oils, Hydraulic Fluids, Paints, and Spent Solvents)

Routine maintenance activities generate wastes that may be agent contaminated. Some of these wastes may be recycled and not disposed or treated as hazardous wastes (e.g., oils, hydraulic fluids, and spent solvents). Waste numbers that may be associated with these wastes include D001, D002, D003, D004, D005, D006, D007, D008, D009, D010, D011, D022, D028, D030, D039, D040, and/or F001–F005; and agent-contaminated materials in this waste stream are identified with the waste number N003.

This document contained Export Control/International Traffic in Arms Regulations Information.

Containers

The permitted container storage area at the EDT Facility (i.e., EDT Service Magazine) complies with the secondary containment requirements for storing containers with free liquids. The Service Magazine is used only for storage of the M110 155mm H-filled chemical projectiles and the stockpile-derived DOT bottles. The projectile body, DOT bottles, and/or over-packs are the primary containers. These containers are:

a. Transported in EONCs from the apron of the BGCA igloos (i.e., location for transfer of accountability from BGCA as storage operator to BPBG as EDT operator) to the Service Magazine for storage; and

b. Forklifts transport the same containers from the Service Magazine to the EEB for destruction

KRS 224.50-130(5) identifies each of these activities as ~~t~~treatment" (i.e., treatment is defined as including transportation), thus requiring inclusion of these activities in this Class 3 RCRA Permit Modification Request.

The Service Magazine will have a secondary containment consisting of a liner (i.e., chemical-resistant coating on concrete with water stops). This storage area is discussed in detail in Part D of this request for a BGAD RCRA Class 3 Permit Modification.

The EDT Facility uses approved DOT containers to store hazardous wastes in <90-day container storage while meeting the container Level 1 control requirements of EPA air emissions (Subpart CC). Containers are not equipped with pumps, compressors, pressure relief devices, sampling connections, valves, flanges and connectors, or piping and are therefore not subject to Subpart BB requirements. Temporary storage of some hazardous wastes may occur during operations (e.g., bagged agent-derived wastes or storage of liquid wastes in portable tanks). However, EDT Facility personnel place hazardous wastes in DOT-approved waste containers prior to transport off site. Containers may have limited quantities of free liquids. Containers of agent-derived secondary wastes packaged for offsite shipment and treatment/disposal are packaged to eliminate free liquids.

The Part A contained in this Permit Modification Request identifies the waste streams managed/stored at the EDT Facility.

Waste in Tank Systems

There are no wastes stored in hazardous waste tank systems at the EDT Facility; therefore, the requirements for this section are not applicable.

Land Disposal Units [401 KAR 31:170; 401 KAR 38:090, Section 4 & 40 CFR 261, Appendix VIII; 40 CFR 270.14(c)]

Wastes are not placed in land disposal units at the EDT Facility; therefore, the requirements for this section are not applicable.

Land Treatment Units [401 KAR 31:170; 401 KAR 38:090, Section 4 & 40 CFR 261, Appendix VIII; 40 CFR 270.14(c)]

Wastes will not be land treated at the EDT Facility; therefore, the requirements for this section are not applicable.

This document contained Export Control/International Traffic in Arms Regulations Information.

Wastes To Be Land Treated

Wastes will not be land treated at the EDT Facility; therefore, the requirements for this section are not applicable.

Incinerators [401 KAR 31:170 401 KAR 34:240; 401 KAR 38:190 & 40 CFR 261 Appendix VIII; 40 CFR 270.19]

Wastes will not be treated in incinerators at the EDT Facility; therefore, the requirements for this section are not applicable.

Boilers and Industrial Furnaces [401 KAR 31:170; 401 36:020; 401 KAR 38:260 & 40 CFR 261 Appendix VIII]

Wastes will not be treated in boilers or industrial furnaces at the EDT Facility; therefore, the requirements for this section are not applicable.

Waste in Miscellaneous Treatment Units

The maximum volume of chemical munitions that will be treated at the EDT Facility includes the entire stockpile of M110 155mm mustard-filled projectiles and the two DOT bottles.

Factory Acceptance Testing (FAT) or other onsite testing may indicate that this maximum will be lower or higher.

For the purposes of the destruction process in the SDC, the mustard-filled projectiles and over-packs are classified as DOT Hazard Class and Division (HD) 1.2. The net explosive weight (NEW) of a munitions represents the combined explosive weight of all energetics contained in a munitions item or items.

The explosive capacities for the SDC Chamber are up to 6.61 pounds* of non-mass detonating material (TNT equivalent, NEW) per feed cycle. **NOTE**: *This explosive capacity for the SDC is based on the explosive amount use and demonstrated during the Defense of Department Explosives Safety Board (DDESB) Dynamic (Cold Detonation) Test for an identical SDC unit. The limit may be higher or lower based on EDT Facility test results.

Part D of this Permit Modification Request describes the SDC in further detail. This Part also contains information on the demonstration of the effectiveness of this Subpart X unit during treatment of mustard-filled M110 155mm projectiles in the SDC at the Anniston Chemical Agent Disposal Facility (ANCDF).

C-2: Waste Analysis Plan [401 KAR 38:090, Section 2(3), 34:020, Section 4 & 40 CFR 264.13]

A permitted container storage area exists at the EDT Facility. Part D describes the hazardous waste treatment and storage units treating, storing, and generating the waste streams identified in this Part.

This document contained Export Control/International Traffic in Arms Regulations Information.

The BPBG Team uses knowledge of the processes generating the wastes to identify and characterize the wastes treated and stored in the permitted areas. The BGCAPP onsite laboratory performs some standard RCRA analyses as well as agent-related analyses and headspace air monitoring of agent-contaminated materials, using U.S. Army methods, to support the EDT Facility. If needed to characterize EDT Facility waste streams, this onsite laboratory will subcontract with offsite laboratories for additional analytical services.

C-2a: Pre-Acceptance Phase [401 KAR 34:020 Section 4, 401 KAR 34:020, Section 4 & 40 CFR 264.13(c), 40 CFR 264.13 (b)(1), 40 CFR 264.13(b)(3), 40 CFR 261, Appendix I]

Not applicable. Wastes received by the EDT Facility will be transported by BPBG personnel from the apron of the storage igloo (i.e., location for transfer of operator accountability from BGCA to BPBG) in the chemical munitions storage area operated by BGCA. The storage of these items is permitted under the same RCRA Hazardous Waste Management Permit to which the addition of the EDT Facility is being requested. These wastes, therefore, will be accepted from onsite and from the same permit identification number. In addition, the specifications, data sheets and laboratory analyses conducted on these projectiles provide extensive information and generator knowledge [40 CFR 262.11(c)(2) and 401 KAR 32:010, Section 2, Hazardous Waste Determination] concerning these Commonwealth of Kentucky hazardous waste items/munitions. For these reasons, waste analyses are not required prior to accepting these wastes.

C-2b: Analysis of Wastes Received from Offsite Sources

Not applicable. Wastes are not received from offsite sources.

C-2c: Waste Generated Onsite [401 KAR 38:090 Section 2(3), 34:020 Section 4, 40 CFR 264.13 & 40 CFR 264.13(b)(4)]

Sampling Methods

The EDT Facility personnel collect non-routine samples for analysis if generator knowledge is not adequate to characterize a waste or waste stream. Table C-2 lists the specific equipment and/or methods used to obtain representative waste stream samples. For liquid wastes, U.S. EPA-approved sampling methods are used and sampling activities conform to SW-846 requirements. Process knowledge during waste treatment will be incorporated to obtain the necessary chemical and physical information to properly manage reactive hazardous wastes at the EDT Facility. The methods used to test the parameters for the chemical munitions and treatment residues are described in Table C-3 below. Fill specifications and standards are used in lieu of testing to characterize the munitions‘ components (i.e., explosives and chemical agents), and this information is used to characterize wastes containing chemical agent.

Frequency of Analysis

Frequency of waste analysis will include initial sampling of waste streams with quarterly confirmation analyses, unless the process or waste stream is known to have undergone a change. Reanalysis will be performed following known or suspected change in the process or waste stream.

This document contained Export Control/International Traffic in Arms Regulations Information.

Process Knowledge

EDT Facility personnel use process (generator) knowledge in conjunction with air monitoring as required to determine whether solid wastes (e.g., PPE, components/parts, disposable items) may be contaminated and pose a hazard to human health due to contamination with chemical agent. These items are placed into an enclosed volume of air (e.g., within a plastic bag or other container) where the headspace above these items is air monitored. The results of the headspace monitoring may show that the waste meets a chosen decontamination level (i.e., 1 vapor screening level or less – ≤ 1 VSL) or indicate that additional decontamination is required. EDT Facility personnel also use generator knowledge to characterize other wastes (i.e., wastes not contaminated with mustard agent).

Analytical and Monitoring Methods

Table C-1 lists the waste streams and testing proposed to make waste determinations with the rationale and the basis for selecting the testing for each waste stream. Table C-2 identifies appropriate sampling equipment and methods for sampling EDT Facility wastes. The analytical parameters and rationale for their selection are described by waste category in the paragraphs below and have been divided into two groups – solids and liquids. The EDT Facility wastes, analytical methods, frequency of analysis, rationale for the selection of the analytical method and regulatory basis for the analysis or monitoring are summarized in Table C-2.

C-2c(1): Solids

a. Treated Scrap Material from the SDC and Dust, Ash and Particulate Material from the Buffer Tank and Cyclone Separator

Dust, ash, and particulate material are generated during regular operation of the SDC and during maintenance activities associated with the buffer tank equipment. A grab sample initially will be collected from this waste stream for the purposes of characterization and profile development. Quarterly resampling and analysis will be conducted to ensure the profile has not changed and generator knowledge will be used to identify any process or waste stream changes that would require a re-analysis. The residues will be analyzed for TCLP organics and TCLP metals. The disposal requirements will be based on the results of analysis.

b. Salts and Dusts from Spray Dryer

This waste stream is generated by recycling water from scrubber operation into the spray dryer and consists of residual salts with collected dust particles. Samples will be tested for TCLP organics and TCLP metals. Profiles for these solids may be used to characterize waste for disposal for specific waste streams. The residues will be analyzed for TCLP organics and TCLP metals. The disposal requirements will be based on the analysis results. At a minimum, quarterly sampling and analysis will be conducted to ensure the profile has not changed and generator knowledge will be used to identify any process or waste stream changes that would require a re-analysis.

This document contained Export Control/International Traffic in Arms Regulations Information.

c. Spent Solids from the Bag House Filter

The bag house is utilized for particulate and semi-volatile metal collection. Therefore, initial analysis of this waste stream and generator knowledge will be used to characterize waste from this OTS unit for treatment and/or disposal. The residues will be analyzed for TCLP organics and TCLP metals. The disposal requirements will be based on the results of analysis. At a minimum, quarterly sampling and analysis will be conducted to ensure the profile has not changed and generator knowledge will be used to identify any process or waste stream changes that would require a re-analysis.

d. Filters from the Final Filter

This waste is comprised of HEPA filters and carbon elements from the EDT HVAC filter systems. The filter system is designed as a backup for the SDC OTS system. Due to the efficiency of the OTS devices upstream of this filter unit, it is not expected that this system ever will be exposed to pollutants that will require carbon element or filter replacement. In the event replacements are required (based upon agent monitoring), spent carbon and filters will be properly stored in containers and treated and/or disposed as N003 waste due to the potential for low concentrations of mustard agent.

e. Explosives/Burster

The explosives and related compounds are not tested prior to or during processing. These materials are standard military components; therefore, sufficient information is available on their composition. Data available from the munitions manufacturer and quality control for these materials have been used with engineering knowledge for proper characterization and to assess effective treatment processes. The operating temperature of the DC is well above the auto-ignition temperature of the explosive components in the burster [i.e., 370ºF material safety data sheet (MSDS) for Tetryl].

f. Miscellaneous Solid Waste

Miscellaneous solid waste includes, but is not limited to, valves, pumps, gearboxes, conveyors, belts, piping, hoses, flanges, thermocouples, pH probes, nuts, bolts, gaskets, and other waste removed from the SDC equipment or generated during maintenance and operation of the SDC. Miscellaneous solid waste will be characterized by generator knowledge and/or analysis. Analysis may be limited to a particular hazardous waste number or series of numbers, such as TCLP metals, or it may be extensive if necessary to adequately characterize and profile the waste. The disposal requirements will be based on generator knowledge and/or analytical results.

g. Decontamination Waste (Solid)

While not a routinely generated waste stream, agent-contaminated waste may be generated during maintenance and operation of the EDT Facility. This waste will be decontaminated for personnel protection.

This document contained Export Control/International Traffic in Arms Regulations Information.

Agent-contaminated personal protective equipment (PPE) that has been decontaminated will be containerized and transferred to the <90-day storage area prior to shipment and disposal. Agent-contaminated wastes, such as absorbent materials, rags, mops, towels, and equipment resulting from processing of leaking munitions also may be containerized (i.e., using headspace monitoring for hazard determination) and transported offsite to a commercial, permitted treatment, storage and disposal facility (TSDF) for treatment and/or disposal. If necessary, sampling and analysis of these materials will be used to determine proper classification and identification for non-agent contaminants that are subject to RCRA regulations. All decontamination wastes will be managed in accordance with applicable RCRA requirements.

Any waste packaging material not directly associated with a vapor or liquid agent emitting munitions will be considered non-hazardous wastes and will be recycled or disposed of in accordance with solid waste regulations.

C-2c(2): Liquids

Production knowledge, analytical data, and quality assurance data have been used along with engineering knowledge to characterize the chemical agent (Mustard) and to design the optimum treatment unit for its destruction. The chemical agent (Mustard) is a well-defined hazardous waste that can be destroyed by the SDC. Mustard agent is not planned for acceptance sampling or analysis as part of the SDC RCRA treatment process because sufficient information is available from the chemical agent manufacture, manufacturing specifications, and previous studies.

a. OTS System Brines

Brines are generated from the treatment of munitions in the OTS. The intent is to operate by recycling these brines in the OTS resulting in limited or no production of waste brines. However, at times, either due to maintenance or excess brines, it may be necessary to remove some OTS brines and dispose as hazardous waste. Brine sludge also may be generated during the operation of the SDC OTS system. A composite sample (to include a representative portion of any sludge) will be analyzed for chemical agent – H residue, TCLP metals, TCLP organics and pH as necessary to properly characterize the brine and/or sludge. The disposal requirements will be based on the analysis results.

b. Miscellaneous Liquid Waste

Miscellaneous liquid waste such as, but not limited to, cleanup fluids, reserve flush tank solution, hydraulic fluid and lubricating oil, and paints will be generated periodically during operation and maintenance activities at the EDT Facility. This waste stream is typically characterized by generator knowledge. Miscellaneous liquid waste that is not characterized by generator knowledge will be analyzed for TCLP metals, TCLP organics and/or pH as necessary for proper characterization. The disposal requirements will be based on generator knowledge or the analytical results.

c. Decontamination Solution

In the event leaking munitions are found during normal operations, surface decontamination, if necessary, of the munitions components, dunnage, and the building floor will be accomplished with solutions specifically selected to neutralize the mustard chemical agent. Surface contamination can be neutralized with dilute solutions [e.g., sodium hydroxide (NaOH), sodium hypochlorite (NaOCl), commercial bleach, or other solutions]. Spent decontamination solutions will be containerized and stored prior to disposal in accordance with RCRA regulations. Decontamination waste not characterized using generator knowledge will be analyzed for TCLP metals, TCLP organics and/or pH as necessary for proper characterization. Due to the

This document contained Export Control/International Traffic in Arms Regulations Information.

possibility of leaking munitions, this waste may be managed as agent derived and have the waste number N003 assigned. Other disposal requirements will be based on generator knowledge or analytical results.

C-2d: Additional Requirements for Facilities Handling Ignitable, Reactive, or Incompatible Wastes

The waste characterization program and information described in this Part provide the procedures and methods needed to identify ignitable, reactive, and incompatible wastes.

Ignitable and reactive wastes, when present, are stored in DOT containers, the waste in the DOT container is placed on a containment pallet and managed in a manner that prevents chemical reaction, fire, or explosion. To prevent actual ignition, these wastes are stored in areas away from sources of ignition and have conspicuous placement of ~~"N~~No Smoking or Open Flames" signs. Smoking in the EDT Facility is permitted only in designated areas, and open flames are only allowed with a Hot Work Permit. Other potentially incompatible wastes will be managed similarly in the <90-day storage areas.

C-2e: Additional Requirements Pertaining to Boiler/Industrial Furnace Facilities

Not applicable. Boilers or industrial furnaces are not used at the EDT Facility for waste treatment.

Additional Requirements for Wastes Generated Offsite

Not Applicable. Wastes received at the EDT Facility include only chemical projectiles [i.e., M110 155mm H-filled projectiles, over-packs, and DOT bottles containing mustard (e.g., waste number N003)].

Applicability of Treatment Standards

Not Applicable. Land disposal or land treatment will not be conducted at EDT Facility.

C-3: Additional Waste Analysis Requirements Pertaining to Land Disposal Restrictions [401 KAR 37:010, Section 7, 34:020 Section 4, 36:020 Section 3, 38:090 Section 2(3) & 40 CFR 264.13(a)(1), 264.13(b)(6), 266.101(a)(2)(ii), and 268.7]

The Hazardous and Solid Waste Amendments to RCRA prohibit land disposal of untreated, restricted wastes that are subject to RCRA, and establish treatment standards for these restricted wastes before allowing land disposal. Information provided in this section describes the method by which EDT Facility personnel identify, characterize, document, and certify wastes that are or are not subject to LDRs.

The EDT Facility is both a generator and a storage facility for wastes that may be subject to LDRs. However, a waste analysis plan (WAP) for LDR waste determinations in the permitted storage areas is not required, as the EDT Facility does not treat any of these wastes to meet LDR standards while in storage. EDT Facility personnel do not intend decontamination performed in the facility to serve as treatment to meet LDRs and a treatment standard or LDR does not exist for mustard.

This document contained Export Control/International Traffic in Arms Regulations Information.

Additionally, EDT Facility personnel use knowledge of the waste generating processes to identify and characterize wastes and determine whether treatment is required to meet non-agent LDRs. EDT Facility personnel also perform non-agent analysis of these wastes if necessary to confirm whether LDRs apply.

The information in this section and in Table C-1 allow for determinations of LDR applicability, compliance with non-agent LDR treatment standards, and notification and certification requirements. Appropriately permitted, commercial TSDFs will provide any additional, required treatment to achieve LDR treatment standards.

The EDT Facility generates listed wastes and spent solvent wastes, while also generating characteristic wastes, and waste mixtures with overlapping requirements. Wastes streams are stored in the permitted and <90-day storage units. The EDT Facility personnel determine, as part of the initial waste characterization program, RCRA waste numbers, LDR waste numbers, and underlying hazardous constituents for D001, D002, and D003 wastes. Permitted commercial TSDFs can provide any treatment required to achieve LDR treatment standards. The EDT Facility does not expect to generate dioxin wastes, California List wastes, radioactive mixed wastes, or leachates.

Onsite copies are maintained of all notifications, certifications, demonstrations, and other documentation produced to support the determination for restricted waste treated, stored, or disposed at an appropriately permitted, commercial TSDF.

Retention, in the facility files, of notifications, certifications, supporting data, and waste analysis data is for a period of at least three (3) years.

C-3a: Waste Characteristics [401 KAR 37:010 Section 7, and 34:020 Section 4 & 40 CFR 268.7, and 40 CFR 264.13(a)(1)]

Generator knowledge has been used to determine that the waste being accepted at the EDT Facility is not restricted. Information used as a basis for this determination has been previously provided by BPBG Team to KDEP as part of the RD&D permitting process for the BGCAPP Main Plant.

C-3a(1): Waste Characteristics: Solvent Wastes and Dioxin Containing Wastes [401 KAR 37:010, Section 7; 37:030, Sections 1&2, 34:020, Section 4, 37:010, Sections 4–6 & 40 CFR 268.7(a), 268.20, 268.30, 268.31, 264.13(a)(1), 268.40, 268.5, and 268.6]

The EDT Facility does not ship F001–F005 solvents offsite for land disposal, and uses generator knowledge and/or analytical testing to determine whether waste treatment processes generate dioxin-containing, restricted wastes. Operating records include the generator knowledge and/or analytical results used to make restricted waste determinations.

Prohibitions: Dilution As A Substitute For Treatment

Not applicable. The EDT Facility does not treat wastes or treatment residues restricted from land disposal by dilution.

Wastes That Are Prohibited From Combustion

Not applicable. No wastes treated in the EDT Facility are prohibited from combustion.

This document contained Export Control/International Traffic in Arms Regulations Information.

Dilution Prohibitions for Lead Containing Wastes

Lead containing hazardous wastes will not have iron filings or other metallic iron added to achieve any LDR treatment standard.

Waste Specific Prohibitions: Wood-Preserving Wastes

Not applicable. The EDT Facility will not treat or generate F032, F034, or F035 wood preserving wastes.

C-3a(2): Waste Characteristics – California List Wastes [401 KAR 37:020, Section 4(1)(a), 37:010, Section 7, and 37:030, Section 3 & 40 CFR 264.31]

Based on generator knowledge, the EDT Facility does not treat or generate wastes within this list including:

a. Liquid hazardous wastes with pH <2.0
b. Liquid wastes containing polychlorinated biphenyl (PCBs) at concentrations >50 ppm
c. Liquid hazardous wastes that are primarily water and contain halogenated organic compounds (HOCs) in total concentrations ≥1,000 mg/L
d. Non-liquid hazardous wastes that contain HOCs in total concentrations ≥1,000 mg/kg

C-3a(3): Waste Characteristics – First Third Wastes [401 KAR 37:030, Section 4, 34:020, Section 4(1)(a), and 37:010, Section 7 & 40 CFR 268.40 and 268.43]

The EDT Facility personnel test for waste characteristics in the first third list of wastes in the nine (9) waste streams identified in the Part A of this Permit Modification Request or use generator knowledge to exclude a waste characteristic from further consideration. Table C-2 identifies the sampling methods used and Table C-3 summarizes the testing that will be performed.

(a) Additional Requirements for Disposal Facilities

Not applicable. The EDT Facility receives no offsite wastes and is not a disposal facility.

(b) Additional Requirements for Surface Impoundments Exempted from Land Restrictions

Not applicable. The EDT Facility does not include any surface impoundments.

(c) Requirements for Land Disposal Facilities With an Approved Exemption or Extension

Not applicable. The EDT Facility does not include any land disposal facilities and does not have an approved exemption or extension.

This document contained Export Control/International Traffic in Arms Regulations Information.

Table C-1: EDT Facility Wastes, Testing, and Rationale for Proposed Testing

Waste Stream and Waste Numbers	Potential Waste Characterization and Testing[1,2]	Media Type	Rationale
SDC Chamber Residue[1]: **D004-D011 and/or N003**	Toxic Characteristic Leaching Procedure (TCLP) and metals analyses used to evaluate whether RCRA metals are present in concentrations above RCRA criteria.	Solids	RCRA metals testing of residues from the Chamber and removed from Scrap Metal by vibration. Testing performed to determine need for additional treatment (e.g., stabilization of metals).
	Wastes are agent-derived based upon RCRA Mixture and Derived-From Rules, however RCRA recycling exemption and Army regulations allow scrap metal to be recycled.		These wastes will be agent-derived based upon generator knowledge.
Agent-Derived / Contaminated KY Wastes[1,2] (PPE, trash, rags, munitions dunnage, and operations & maintenance wastes): **D001, D002, D004-D011, D022, D026, D027-D030, D037, D039, D040, F001-F005, and/or N003**	Derived from/mixed with Mustard a Commonwealth of Kentucky Listed Waste. Generator knowledge will be used to identify agent-derived waste. The solid wastes may be screened and the risks to human health will be evaluated using headspace air monitoring of waste in compliance with site procedures using near-real-time monitoring instrument - MINICAMS® or Depot Area Air Monitoring System (DAAMS). Method developed for Project will be used to analyze liquid wastes for mustard.	Solids & Liquids	Concern is with meeting transportation requirements and defining the risk to human health associated with the presence of low concentrations of Mustard agent in the waste. A project- specific method will be used to determine the concentration of agent in liquid wastes. Results of these tests will be used to safely manage this waste.
	Toxic Characteristic Leaching Procedure (TCLP) for Cresol and Pentachlorophenol to determine if preservatives were used to treat munitions dunnage.		If munitions dunnage contains preservatives (i.e., Cresol and/or Pentachlorophenol), it is expected to be marked indicating preservatives are present (P), but analyses are required to verify appropriate waste management and offsite treatment/disposal.
	Organics (e.g. solvents) in these wastes will be analyzed by EPA methods to identify and quantify waste constituents present.		MSDSs and generator knowledge will be used to identify waste constituents. However, laboratory analyses for a range of organics may be needed to determine safe and efficient waste disposal and treatment alternatives.

This document contained Export Control/International Traffic in Arms Regulations Information.

1

Waste Stream	Potential Waste Characteristics and Testing[1]	Media Type	Rationale
Laboratory Wastes[1]: **D001, D002, D003, D004-D011, D022, D026-D030, D037, D039-D040, F001-F005, and/or N003**	Ignitability determination may be needed for some waste mixtures; however, generator knowledge may be sufficient without analysis.	Solids & Liquids	Laboratory wastes are often ignitable due to use of solvents during extractions and sample preparation.
	Corrosive nature of some samples may result in some laboratory wastes being corrosive and to properly manage these wastes must be analyzed unless the pH of the sample is already known.		Waste samples are sometimes expected to be corrosive (pH ≥12.5 or ≤ 2 units).
	Generator knowledge will be used to identify any reactive laboratory wastes.		Possibility exists that some reactive wastes may be generated in the laboratory.
	Characterization of RCRA metals and volatiles in these wastes needed to ensure appropriate waste management and offsite treatment and/or disposal. However, generator knowledge is expected to be sufficient after initial waste determinations. Sampling and analysis will be conducted if necessary for waste characterization or if laboratory procedures change.		Content of laboratory wastes will be initially based upon results of laboratory waste analyses. Constituents expected in these wastes will include those found in wastes from SDC operations (e.g., metals, solvents from maintenance activities, etc.) and solvents and other organics generated during laboratory analyses.
	Wastes coming from some SDC maintenance activities and the OTS will be agent-derived based upon generator knowledge.		The samples of agent-derived wastes will continue to carry this listing and become agent-derived wastes after laboratory analysis.

This document contained Export Control/International Traffic in Arms Regulations Information.

Waste Stream	Potential Waste Characteristics and Testing[1]	Media Type	Rationale
Miscellaneous Wastes[1]: **D001, D002, D003, D004-D011, D022, D028, D030, D039, D040, F001-F005, and/or N003**	Ignitability determination may be needed for some waste mixtures or generator knowledge may be sufficient without analysis.	Liquids	Ignitable wastes may be included in these wastes and may be readily identifiable by manufacturer's information.
	Waste samples may be corrosive (pH ≥12.5 or ≤ 2 units). Analysis will be required unless the pH of the waste is already known. RCRA metals contamination of these liquids is expected and analysis of individual products - especially paints may be necessary.		Corrosive nature of some wastes may require that waste number D002 be added to identify and properly manage some of these wastes.
	Generator knowledge will be used to identify any reactive wastes.		Possibility exists that some reactive wastes may be included in this waste stream.
	Characterization of RCRA metals and volatiles in these wastes needed to ensure appropriate waste management and offsite treatment and/or disposal. However, generator knowledge is expected to be sufficient after initial waste determinations. Sampling and analysis will be conducted if necessary for waste characterization or if laboratory procedures change.		Expected that these liquid wastes (especially the paints) will contain metals and volatiles.
	Spent solvents from O&M tasks are characterized for treatment/disposal using generator knowledge and analysis when generator knowledge is not sufficient.		O&M activities may involve use of solvents for degreasing and could result in spent solvents being generated (F001-F005).
	These wastes will be characterized as agent-derived based upon generator knowledge.		Wastes from some SDC maintenance activities may come in contact with agent.

This document contained Export Control/International Traffic in Arms Regulations Information.

Waste Stream	Potential Waste Characteristics and Testing[1]	Media Type	Rationale
Liquids from OTS Scrubbers[1]: **D002, D004-D011, and/or N003**	Possible corrosive nature of waste must be known to properly manage these wastes will be analyzed unless the pH can be based upon generator knowledge.	Liquids	Wastes could be corrosive if system is not operating properly (pH ≥12.5 or ≤ 2 units).
	Characterization of RCRA metals needed to ensure appropriate waste management and offsite treatment and/or disposal.		RCRA metals are expected in scrubber liquids.
	These wastes will be agent-derived based upon generator knowledge.		Wastes from the Scrubbers will have contacted Mustard and waste constituents removed by the scrubbers may be high in metals and perhaps corrosivity.
Solids from Buffer Tank[1]: **D004-D011, and/or N003**	Characterization of RCRA metals needed to ensure appropriate waste management and offsite treatment and/or disposal.	Solids	RCRA metals are present in these wastes.
	These wastes will be agent-derived based upon generator knowledge.		Wastes from the Buffer Tank will have contacted Mustard and solids removed from air flow in the Buffer Tank may be high in metals.
Dry Salts and Particulates from Spray Dryer[1]: **D004-D011, and/or N003**	Characterization of RCRA metals needed to ensure appropriate waste management and offsite treatment and/or disposal.	Solids	RCRA metals are present in these wastes.
	These wastes will be agent-derived based upon generator knowledge.		Wastes from Spray Dryer will have contacted Mustard and the particulates and salts removed from air flow in the Spray Dryer may be high in metals.

1

This document contained Export Control/International Traffic in Arms Regulations Information.

1

Waste Stream	Potential Waste Characteristics and Testing[1,2]	Media Type	Rationale
Particulates and Adsorbed Vapors from the Carbon, Pre-Filters and HEPA Filters[1]: **D001, D004-D011, and/or N003**	Characterization of RCRA metals needed to ensure appropriate waste management and offsite treatment and/or disposal.	Solids	RCRA metals are present in these wastes.
	These wastes will be agent-derived based upon generator knowledge.		Filter Units components will have contacted agent and other waste constituents (e.g., metals) due to air through the unit.
Dust and Metal Oxides from Bag House Filters[1]: **D004-D011, and/or N003**	Characterization of RCRA metals needed to ensure appropriate waste management and offsite treatment and/or disposal.	Solids	RCRA metals are present in these wastes.
	These wastes will be agent-derived based upon generator knowledge.		Bag House Filters will contact agent and other waste constituents (e.g., metals) due to air flow through the unit. Metals concentrations in the wastes removed may require handling of these dusts and metal oxides as hazardous waste.

2

NOTES:
[1]Generator knowledge used to determine whether waste is agent-derived.
Headspace monitoring used to evaluate potential risks/hazards associated with handling waste solids potentially contaminated with low levels of agent.

3
4

This document contained Export Control/International Traffic in Arms Regulations Information.

Table C-2: Waste Sampling Methods and Equipment

Description of Material to be Sampled	Sampling Method[1, 2]	Equipment[1]
Extremely viscous liquid	ASTM standard D140/D140-09	Tubing or trier
Crushed or powdered material	ASTM standard D346-04	Tubing, trier, auger, scoop, or shovel
Solid or rock-like material	ASTM standard D420-98	Tubing, trier, auger, scoop, or shovel
Solid or rock-like material	ASTM standards D1452-09, D5633-04, and D5451-93	Tubing, trier, auger, scoop, or shovel
Ash-like material	ASTM standard C311-07	Tubing, trier, auger, scoop, or shovel
Containerized liquid	SW-846	Coliwasa, tubing
Waste tank liquids	Tap	Sampling bottle

NOTES:
[1] The methods and equipment used at the EDT Facility may differ from those on this table as outlined by the Laboratory Analytical and Monitoring Plan or individual laboratory operating procedures. These documents are in development.
[2] American Society for Testing and Materials, annual book of ASTM standards, Volumes 04-03, 04-08, 05-05, Philadelphia, PA

1

2

Table C-3: EDT Facility Waste Analysis (WAP) Summary

WASTE MATERIAL	TYPE OF ANALYSIS	ANALYTICAL METHOD	FREQUENCY OF ANALYSIS	REGULATORY REQUIREMENT
Chamber Residue (Particulates & Ash)	Toxicity Characteristic Leaching Procedure (TCLP) Metals	EPA Method 1311, 3015, 6020[1]	As a minimum: during initial waste generation or when process changes, then quarterly	401 KAR 31:030, Section 5; and 40 CFR 261.24
	Headspace Monitoring	MINICAMS® in Accordance with BTRA and Army Policy	As a minimum: during initial waste generation or when process changes, then quarterly	Based Upon U.S. Army Policy and Procedures – Waste Remains N003
Agent-Derived Contaminated KY Wastes: PPE, Rags, Munitions Dunnage Trash, O&M Wastes	Toxicity Characteristic Leaching Procedure (TCLP) Metals	EPA Method 1311, 3015, 6020[1]	As a minimum: during initial waste generation or when process changes, then quarterly	401 KAR 31:030, Section 5; 40 CFR 261.24
	Headspace Monitoring	MINICAMS® in Accordance with BTRA and Army Policy		Based Upon U.S. Army Policy and Procedures – Waste Remains N003
	Cresol, Pentachlorophenol	EPA Method 1311, 3510, 3580, 8041[1]		401 KAR 31:030, Section 5; 40 CFR 261.24
	Organics	EPA Methods 1311, 5030, 8260, 8270[1]		401 KAR 31:030, Section 5; 31:040, Section 2 40 CFR 261.24, 261.31

[1] These are suggested EPA methods; however, based upon previous generator knowledge and/or offsite laboratory recommendations other approved EPA methods may be used depending upon the specific matrix.

EDT Facility Waste Analysis (WAP) Summary (continued)

WASTE MATERIAL	TYPE OF ANALYSIS	ANALYTICAL METHOD	FREQUENCY OF ANALYSIS	REGULATORY REQUIREMENT
Laboratory Wastes	Ignitability	EPA Method 1010[1]	As a minimum: during initial waste generation or when process changes, then quarterly	401 KAR 31:030, Section 2; 40 CFR 261.21
	Corrosivity (pH)	EPA Methods 9040, 9041, 9045[1]		401 KAR 31:030, Section 3; 40 CFR 261.22
	Reactivity	Generator Knowledge		401 KAR 31:030, Section 4; 40 CFR 261.23
	Toxicity Characteristic Leaching Procedure (TCLP) Metals	EPA Method 1311, 3015, 6020[1]		401 KAR 31:030, Section 5; 40 CFR 261.24
	Organics	EPA Methods 1311, 5030, 8260, 8270[1]		401 KAR 31:030, Section 5; 31:040, Section 2 40 CFR 261.24, 261.31
	Cresol, Pentachlorophenol (phenols)	EPA Method 1311, 3510, 3580, 8041[1]		401 KAR 31:030, Section 5; 40 CFR 261.24
	Presence of Free Chlorine or Agent Screen[2]	Analytical Method Under Development		401 KAR 31:010, 31:040, Section 7; 40 CFR 261.3(a)(2)(iv) and (c)(2)(i)
	Headspace Monitoring	MINICAMS® in Accordance with BTRA and Army Policy		Based Upon U.S. Army Policy and Procedures – Waste Remains N003

[1] These are suggested EPA methods; however, based upon previous generator knowledge and/or offsite laboratory recommendations other approved EPA methods may be used depending upon the specific matrix.

[2] Analytical method/clearance criteria: Concentration equivalence of 99.9999% Agent Destruction

This document contained Export Control/International Traffic in Arms Regulations Information.

EDT Facility Waste Analysis (WAP) Summary (continued)

WASTE MATERIAL	TYPE OF ANALYSIS	ANALYTICAL METHOD	FREQUENCY OF ANALYSIS	REGULATORY REQUIREMENT
Miscellaneous Wastes: Oils, Hydraulic Fluids, Paints, Solvents	Ignitability	EPA Method 1010[1]	Prior to disposal	401 KAR 31:030, Section 2; 40 CFR 261.21
	Corrosivity (pH)	EPA Methods 9040, 9041, 9045[1]		401 KAR 31:030, Section 3; 40 CFR 261.22
	Reactivity	Generator Knowledge		401 KAR 31:030, Section 4; 40 CFR 261.23
	Toxicity Characteristic Leaching Procedure (TCLP) Metals	EPA Method 1311, 3015, 6020[1]		401 KAR 31:030, Section 5; 40 CFR 261.24
	Organics	EPA Methods 1311, 5030, 8260, 8270[1]		401 KAR 31:030, Section 5; 31:040, Section 2 40 CFR 261.24, 261.31
	Cresol, Pentachlorophenol (phenols)	EPA Method 1311, 3510, 3580, 8041[1]		401 KAR 31:030, Section 5; 40 CFR 261.24
	Agent-Derived (Mustard) Waste	Generator Knowledge		401 KAR 31:010, 31:040, Section 7; 40 CFR 261.3(a)(2)(iv) and (c)(2)(i)
	Agent Screen[2]	Analytical Method Under Development		401 KAR 31:010, 31:040, Section 7; 40 CFR 261.3(a)(2)(iv) and (c)(2)(i)

[1] These are suggested EPA methods; however, based upon previous generator knowledge and/or offsite laboratory recommendations other approved EPA methods may be used depending upon the specific matrix.
[2] Analytical method/clearance criteria: Concentration equivalence of 99.9999% Agent Destruction

This document contained Export Control/International Traffic in Arms Regulations Information.

EDT Facility Waste Analysis (WAP) Summary (continued)

WASTE MATERIAL	TYPE OF ANALYSIS	ANALYTICAL METHOD	FREQUENCY OF ANALYSIS	REGULATORY REQUIREMENT
Liquids from OTS Scrubbers	Corrosivity (pH)	EPA Methods 9040, 9041, 9045[1]	As a minimum: during initial waste generation or when process changes, then quarterly	401 KAR 31:030, Section 3; 40 CFR 261.22
	Toxicity Characteristic Leaching Procedure (TCLP) Metals	EPA Method 1311, 3015, 6020[1]		401 KAR 31:030, Section 5; 40 CFR 261.24
	Agent Screen[2]	Analytical Method Under Development		401 KAR 31:010, 31:040, Section 7; 40 CFR 261.3(a)(2)(iv) and (c)(2)(i)
Solids from Buffer Tank	Toxicity Characteristic Leaching Procedure (TCLP) Metals	EPA Method 1311, 3015, 6020[1]	As a minimum: during initial waste generation or when process changes, then quarterly	401 KAR 31:030, Section 5; 40 CFR 261.24
	Agent-Derived (Mustard) Waste	Generator Knowledge		401 KAR 31:010, 31:040, Section 7; 40 CFR 261.3(a)(2)(iv) and (c)(2)(i)
	Headspace Monitoring	MINICAMS® in Accordance with BTRA and Army Policy		Based Upon U.S. Army Policy and Procedures – Waste Remains N003

[1] These are suggested EPA methods; however, based upon previous generator knowledge and/or offsite laboratory recommendations other approved EPA methods may be used depending upon the specific matrix.
[2] Analytical method/clearance criteria: Concentration equivalence of 99.9999% Agent Destruction

EDT Facility Waste Analysis (WAP) Summary (continued)

WASTE MATERIAL	TYPE OF ANALYSIS	ANALYTICAL METHOD	FREQUENCY OF ANALYSIS	REGULATORY REQUIREMENT
Dry Salts and Particulates from Spray Dryer	Toxicity Characteristic Leaching Procedure (TCLP) Metals	EPA Method 1311, 3015, 6020[1]	As a minimum: during initial waste generation or when process changes, then quarterly	401 KAR 31:030, Section 5; 40 CFR 261.24
	Agent-Derived (Mustard) Waste	Generator Knowledge		401 KAR 31:010, 31:040, Section 7; 40 CFR 261.3(a)(2)(iv) and (c)(2)(i)
	Headspace Monitoring	MINICAMS® in Accordance with BTRA and Army Policy		Based Upon U.S. Army Policy and Procedures – Waste Remains N003
Particulates and Adsorbed Vapors from the Carbon, Pre-Filters, and HEPA Filters	Toxicity Characteristic Leaching Procedure (TCLP) Metals	EPA Method 1311, 3015, 6020[1]	As a minimum: during initial waste generation or when process changes, then quarterly	401 KAR 31:030, Section 5; 40 CFR 261.24
	Agent-Derived (Mustard) Waste	Generator Knowledge		401 KAR 31:010, 31:040, Section 7; 40 CFR 261.3(a)(2)(iv) and (c)(2)(i)
	Headspace Monitoring	MINICAMS® in Accordance with BTRA and Army Policy		Based Upon U.S. Army Policy and Procedures – Waste Remains N003
Dust and Metal Oxides from Bag House Filters	Toxicity Characteristic Leaching Procedure (TCLP) Metals	EPA Method 1311, 3015, 6020[1]	As a minimum: During initial waste generation or when process changes, then quarterly	401 KAR 31:030, Section 5; 40 CFR 261.24
	Agent-Derived (Mustard) Waste	Generator Knowledge		401 KAR 31:010, 31:040, Section 7; 40 CFR 261.3(a)(2)(iv) and (c)(2)(i)
	Headspace Monitoring	MINICAMS® in Accordance with BTRA and Army Policy		Based Upon U.S. Army Policy and Procedures – Waste Remains N003

[1] These are suggested EPA methods; however, based upon previous generator knowledge and/or offsite laboratory recommendations other approved EPA methods may be used depending upon the specific matrix.

This document contained Export Control/International Traffic in Arms Regulations Information.

Appendix C-1: **Headspace Air Monitoring and Army Decontamination Levels**

Introduction

This document describes the U.S. Army requirements for evaluating the risks/hazards associated with secondary wastes containing low levels of agent to determine whether the wastes can be transported offsite in accordance with U.S. Army policy and regulations. In addition, this document describes the process used to evaluate and/or monitor, and transport secondary wastes offsite for commercial treatment or disposal. Included is a discussion of relevant U.S. Army guidance and the Bounding Transportation Risk Assessment (BTRA).

Definitions of Airborne Exposure Limits (AELs)

AELs are unique military standards for exposure of unprotected workers and the general population to chemical agents. These airborne, time weighted average (TWA) standards are based upon recommendations of the Centers for Disease Control and Prevention (CDC) promulgated in the Federal Register[1,2,3] and incorporated into U.S. Army regulations[4]. The AELs are the allowable, average concentrations in air for workplace and general population exposures. AELs include worker population limits (WPLs), short-term exposure limits (STELs), and general population limits (GPLs). Basis of AELs is exposure to a concentration for a set duration (time). The TWA is the average concentration of a chemical agent for a specified duration or length of time. Specific definitions for the AELs are as follows:

i. ***WPL*** is an 8-hour TWA. Exposure below the WPL is safe and not expected to produce any adverse health effect. Acute or sub-chronic exposure above the WPL should not produce any adverse health effect because the WPL is a chronic exposure limit. This is the TWA airborne concentration for exposure of unmasked worker for an 8-hour workday, 40-hour week, for 30 years without adverse effect.

ii. ***STEL*** is the maximum concentration for exposure of unprotected chemical workers for up to 15 minutes continuously. The number of exposures allowed for a worker at the STEL is dependent on the chemical agent. For H exposure, CDC recommended the exposure to the STEL concentration should be as short as practical (no longer than 15 minutes) and should not occur more than once per day.

iii. ***GPL*** is a 12-hour TWA for mustard agent (H). The basis of this GPL is exposure for 7 days per week and a 70-year lifetime.

Appendix Table C-1-1 provides the AEL values for the mustard agent stored and processed through the EDT Facility.

This document contained Export Control/International Traffic in Arms Regulations Information.

Vapor Screening Level (VSL) and Agent Contamination in Secondary Wastes

Prior to transport of non-liquid secondary wastes from the BGCAPP Main Plant/EDT Facility site, U.S. Army policy, regulations, and procedures require evaluation of the waste for the presence and degree of agent contamination. The evaluation or assessment process for chemical agent in wastes can involve monitoring the agent concentration in the air above the contained waste (i.e., headspace) or use of generator knowledge. VSL determinations are the result of monitoring the headspace above an item contained in an enclosed space (i.e., limiting the incoming air – preventing significant dilution). The EDT Facility monitors and reports the results of headspace monitoring in multiples of the VSL. The VSL concentration is 3×10^{-3} mg/m^3 for H (mustard agent).

VSL concentrations determined from headspace monitoring are reported in multiples of the VSL (e.g., 5 VSL, 150 VSL) or simply less than/greater than or equal to one VSL (<1 or ≥1 VSL). The VSL measurements from headspace monitoring of the wastes can be used to assess (i.e., using risk assessment techniques from the BTRA) whether a waste should be released (i.e., based on the amount of risk) for offsite shipment to an appropriately permitted, commercial TSDF or must be decontaminated and re-monitored. The selection of a TSDF also may be based on the VSL reading. Headspace monitoring can determine if a risk to human health from chemical agent exists but does not quantify the amount of agent contamination in the waste.

The SDC Operators will use generator knowledge in conjunction with headspace monitoring to evaluate and manage the hazards and risks associated with the storage and offsite transport for disposal/treatment of agent containing wastes. The EDT Facility will maintain records to document and support generator knowledge. Documentation used to support generator knowledge can include:

i. Logbook entries
ii. Known absence of liquid agent
iii. Suspected or known agent contamination of waste(s)
iv. Systems worked on
v. Type of waste material(s) (e.g., PPE, metals parts, rags) and decontamination or disassembly accomplished
vi. Airborne agent monitoring results (e.g., for airlocks, life support systems, room agent) associated with activity generating the waste(s)

Headspace Monitoring Methods

MINICAMS® and DAAMS are the two air monitoring methods used for agent air monitoring at the EDT Facility.

The MINICAMS® is an automatic air monitoring system that collects compounds on a solid sorbent trap, thermally desorbs compounds from the trap into a capillary gas-chromatography column for separation, and detects the compounds with a halogen-specific detector (XSD™). The MINICAMS® is a lightweight portable, near real time, low-level monitor for chemical agent with alarm capability.

The DAAMS is a portable air-sampling unit designed to draw a controlled volume of air through a glass tube filled with collection material (e.g., Tenax™ GC). As the air passes through the solid sorbent tube, agent is collected. After sampling is complete, the monitoring technician removes the tube from the sample line and sends it to the onsite laboratory for analysis. The airborne agent-concentration calculation uses the known sampling volume collected during air sampling.

This document contained Export Control/International Traffic in Arms Regulations Information.

Requirements for Headspace Monitoring[a,b]

In accordance with U.S. Army policy and regulations[5,6], headspace air monitoring (i.e., for evaluating risks of onsite waste management, offsite waste transport and disposal/treatment) includes the following:

i. Monitoring after a minimum hold time
ii. Attaining and maintaining a minimum temperature throughout the hold time
iii. Determining the minimum air volume for monitoring (based upon the air monitoring method/procedure used)
iv. Prior to monitoring, verifying wastes have no occluded spaces (i.e., dismantle, decontaminate, flush, rinse, and drain items with cavities)
v. Verifying composition of the material being monitored does not interfere with the headspace monitoring
vi. Eliminating free liquids (i.e., bagged waste must have an absorbent pad placed inside the bag and bagged waste must be double-bagged)
vii. Minimizing dilution air during monitoring (i.e. monitoring of bagged wastes is performed by making a small hole in the bag only large enough to insert the sampling wand)
viii. Conducting representative monitoring of wastes (i.e., bags in drums must be individually monitored or, if monitored inside the drum, the bags are open to allow air circulation)
ix. Placing absorbent pads in the bottom of each drum
x. Verifying sufficient volume is present for monitoring (i.e., item monitored is bagged or contained within space with sufficient volume to permit sample air to be withdrawn)

NOTES:
[a] Minimum hold time and temperature for headspace monitoring established based upon data collected by other chemical agent-demilitarization facilities.
[b] Personnel trained and certified to operate and maintain the sampling devices perform headspace monitoring. Air monitoring equipment calibrated and calibration methods approved before use.

Secondary Wastes

Secondary wastes are agent-derived wastes (e.g., due to contact with liquid agent or agent-contaminated liquids or aerosols) that are generated during maintenance, operations, and closure activities. The National Research Council (NRC), in ~~"~~Review of Chemical Agent Secondary Waste Disposal and Regulatory Requirements" (2007), recommended to the Chemical Materials Agency (CMA) that offsite shipment and disposal of ≥1 VSL secondary wastes be pursued[7]. The CMA implemented a secondary waste management policy based on this NRC recommendation. Secondary wastes can be treated safely and disposed offsite at an appropriately permitted, commercial TSDF following the requirements of this CMA policy; thereby allowing 100 percent devotion of the EDT Facility operations to destroying the chemical weapon stockpile. Secondary wastes derived from mustard agent have been safely shipped offsite for treatment from ANCDF and Aberdeen Chemical Agent Disposal Facility (ABCDF), respectively, without incident.

This document contained Export Control/International Traffic in Arms Regulations Information.

Bounding Transportation Risk Assessment (BTRA)

The U.S. Army CMA, "Bounding Transportation Risk Assessment for >1 Vapor Screening Level (VSL) Waste" (BTRA), September 2008[6], defined the conditions under which ≥1 VSL agent-contaminated secondary waste could be shipped to an appropriately permitted, commercial TSDF (i.e., incinerator) with various levels of risk (i.e., negligible and marginal). The BTRA was prepared to identify and assess the potential risks to members of the public due to accidents during transport of hazardous waste. The levels of risk in the BTRA are based upon:

i. Average headspace readings in a truckload of 55-gallon or 95-gallon containers
ii. Number of shipments to be made
iii. Distance to the an appropriately permitted, commercial TSDF

The objective of the BTRA was to provide a framework for assessing and controlling risks to TSDF workers and the public arising from ≥1 VSL waste shipments. The BTRA applies to secondary wastes or closure wastes leaving any chemical demilitarization facility and creates continuity and consistency in the risk criteria applied to secondary waste shipments. The bounding conditions determine the level of public risk based on:

i. Agent concentrations and/or agent quantity per drum
ii. Distance and number of shipments during the shipment operation Appendix Table C-1-2 following this Appendix

An "Information Package" is prepared prior to U.S. Army approval of offsite shipment of secondary waste [e.g., waste profile, monitoring plans and standing operating procedures (SOPs)], waste segregation and packaging SOPs, transportation plans, health and safety approach).

Offsite Shipments

Offsite shipments of secondary wastes must comply with DOT regulations found in 49 CFR 100–185 and BTRA. The demilitarization facility is required to[6]:

i. Package, in 55-gallon or 95-gallon polyethylene drums, secondary wastes with headspace monitoring results ≥1 VSL. Use polyethylene drums as waste containers for direct feed into an appropriately permitted, commercial TSDF incinerator. Direct waste feed prevents additional TSDF worker exposure.
ii. Allow a maximum of eighty 55-gallon or fifty-one 95-gallon drums per vehicle (as defined in the BTRA)[6].
iii. Palletize and shrink-wrap waste drums and place the palletized drums into the cargo area without stacking the pallets. Ensure the cargo areas for shipments are climate-controlled (i.e. <70°F).

Additional shipping requirements are included in the BTRA[6]. Appendix Table C-1-2 summarizes the bounding conditions for secondary wastes shipments for the mustard agent treated at the EDT Facility. The BTRA indicates that relatively high agent concentrations in individual drums result in negligible risks; however, the CMA accepted and implemented a CDC recommendation not to exceed a ceiling headspace monitoring value for any waste container within a waste shipment. The ceiling concentration for waste that potentially may be transported for treatment/disposal from the EDT Facility is 117 VSL for mustard agent[6].

This document contained Export Control/International Traffic in Arms Regulations Information.

References

1. 53 Federal Register (FR) 8504 (15 March 1988) (corrected in 53 FR 11002, 4 April 1988), Final Recommendations for Protecting Human Health and Safety Against Potential Adverse Effects of Long-term Effects of Long-term Exposure to Low Doses of Agents: GA, GB, VX, Mustard Agent (H, HD, and HT), and Lewisite (L).
2. 68 FR 54460 (17 September 2003)(corrected in 68 FR 58348, 9 October 2003), Final Recommendations for Protecting Human Health from Potential Adverse Effects of Exposure to Agents GA (Tabun), GB (Sarin), and VX.
3. 69 FR 24164 (3 May 2004), Interim Recommendations for Airborne Exposure Limits for Chemical Warfare Agents H and HD (Sulfur Mustard).
4. Department of Army Pamphlet 385-61, Toxic Chemical Agent Safety Standards, 17 December 2008.
5. CMA Memorandum, Requirements for Implementation of the U.S. Army Chemical Agency (CMA) Bounding Transportation Risk Analysis (TRA) for Shipment of Greater Than 1 Vapor Screening Level (VSL) Chemical Agent Contaminated Secondary Waste, 15 September 2008.
6. Chemical Materials Agency (CMA), Final Bounding Transportation Risk Assessment for >1 Vapor Screening Level (VSL) Waste, September 2008.
7. National Research Council (NRC), Review of Chemical Agent Secondary Waste Disposal and Regulatory Requirements, National Academy Press, 2007.

This document contained Export Control/International Traffic in Arms Regulations Information.

Appendix Table C-1-1: AEL for EDT Mustard Agent[1, 2]

Chemical Agent	WPL (mg/m^3)	STEL (mg/m^3)	GPL (mg/m^3)
Mustard	4×10^{-4}	3×10^{-3}	2×10^{-5}

[1] 53 Federal Register (FR) 8504 (15 March 1988) (corrected in 53 FR 11002, 4 April 1988), Final Recommendations for Protecting Human Health and Safety Against Potential Adverse Effects of Long-term Effects of Long-term Exposure to Low Doses of Agents: GA, GB, VX, Mustard Agent (H, HD, and HT), and Lewisite (L).
[2] 69 FR 24164 (3 May 2004), Interim Recommendations for Airborne Exposure Limits for Chemical Warfare Agents H and HD (Sulfur Mustard).

Appendix Table C-1-2: Summary of Bounding Conditions for Mustard*

Shipment of H Secondary Wastes						
Shipping Distance (miles)	Hazard Severity	55-gallon Drum Shipments		95-gallon Drum Shipments		Risk Level
		Headspace Concentration (VSL)*	Number of Shipments	Headspace Concentration (VSL) *	Number of Shipments	
3,000	Negligible	<290	894	<460	894	Low
	Marginal	290 to 440	8	460 to 690	8	Low
2,000	Negligible	<290	1,341	<460	1,341	Low
	Marginal	290 to 440	13	460 to 690	13	Low
1,000	Negligible	<290	2,683	<460	2,683	Low
	Marginal	290 to 440	26	460 to 690	26	Low
500	Negligible	<290	5,366	<460	5,366	Low
	Marginal	290 to 440	53	460 to 690	53	Low

* As recommended by the CDC and implemented by the U.S. Army, waste containers with the following VSL readings or greater are not shipped offsite without further decontamination 117 VSL for H. Based on CMA Memorandum, Requirements for Implementation of the U.S. Army Chemical Agency (CMA) Bounding Transportation Risk Analysis (BTRA) for Shipment of Greater Than 1 Vapor Screening Level (VSL) Chemical Agent Contaminated Secondary Waste, 15 September 2008.

This document contained Export Control/International Traffic in Arms Regulations Information.

Part D: Process Information: Containers [401 KAR 34:180, 38:150, and 34:190, Sections 1 & 3 & 40 CFR 264.170-179, 270.15, 264.190, and 264.192(a)]

The EDT Facility treats and stores hazardous wastes under the Federal and the Commonwealth of Kentucky hazardous waste regulations. The objective of the design, construction, and operation of the EDT Facility is the safe destruction of the chemical munitions (including energetics and mustard agent, a chemical warfare agent), currently stored within BGAD facility boundaries. The wastes the SDC will treat include M110 155mm H-filled projectiles some over-packed and two DOT bottles of mustard. The mustard contained within each projectile is approximately 1 gallon. The DOT bottles are estimated to contain approximately 1.25 and 4.0 liters or 3.50 and 11.25 pounds. Part A of this RCRA Permit Modification Request provides the waste numbers associated with treatment of these items containing mustard agent (waste number N003).

There are two RCRA-permitted units. These units include a Service Magazine (i.e., a container storage area) and the SDC (i.e., a Subpart X Miscellaneous Treatment Unit), as the only permitted, hazardous waste management units within the EDT Facility. Therefore, other portions of the KDEP checklist (e.g., for landfills, waste piles, incinerators) are not applicable. Following this Part D, are copies of the referenced tables, figures, specifications, data sheets, and drawings.

Subsections in this process description address the transport of the munitions, over-packs, and DOT bottles from BGCA storage igloos to the Service Magazine, the waste storage area (the EDT Service Magazine), and the waste treatment unit (or SDC). Paragraph D-1a: Container Management describes container transport and storage. Paragraph D-8: Miscellaneous (Subpart X) Unit describes the SDC and its treatment process.

Additional information relevant to this Permit Modification Request is available for review at the BPBG Team offices, upon request and appointment, by authorized representatives from environmental regulatory agencies during regular business hours.

The conceptual process flow diagram (PFD) for the EDT Facility is provided as Figure D-1.This figure summarizes the SDC process design, and shows the flow of munitions and other waste streams from transport/receipt of projectiles at the Service Magazine through treatment in the SDC. This conceptual PFD also includes pollution abatement in the OTS, and monitoring and discharge of the air stream at the EDT Facility stack.

This document contained Export Control/International Traffic in Arms Regulations Information.

Figure D-1 – Conceptual Process Flow Diagram (PFD)

The PFD contained within this section is a high-level conceptual sketch based on the preliminary PFDs and P&IDs provided by the EDT vendor. This conceptual sketch will need to be updated when the vendor's preliminary information is revised with final design information.

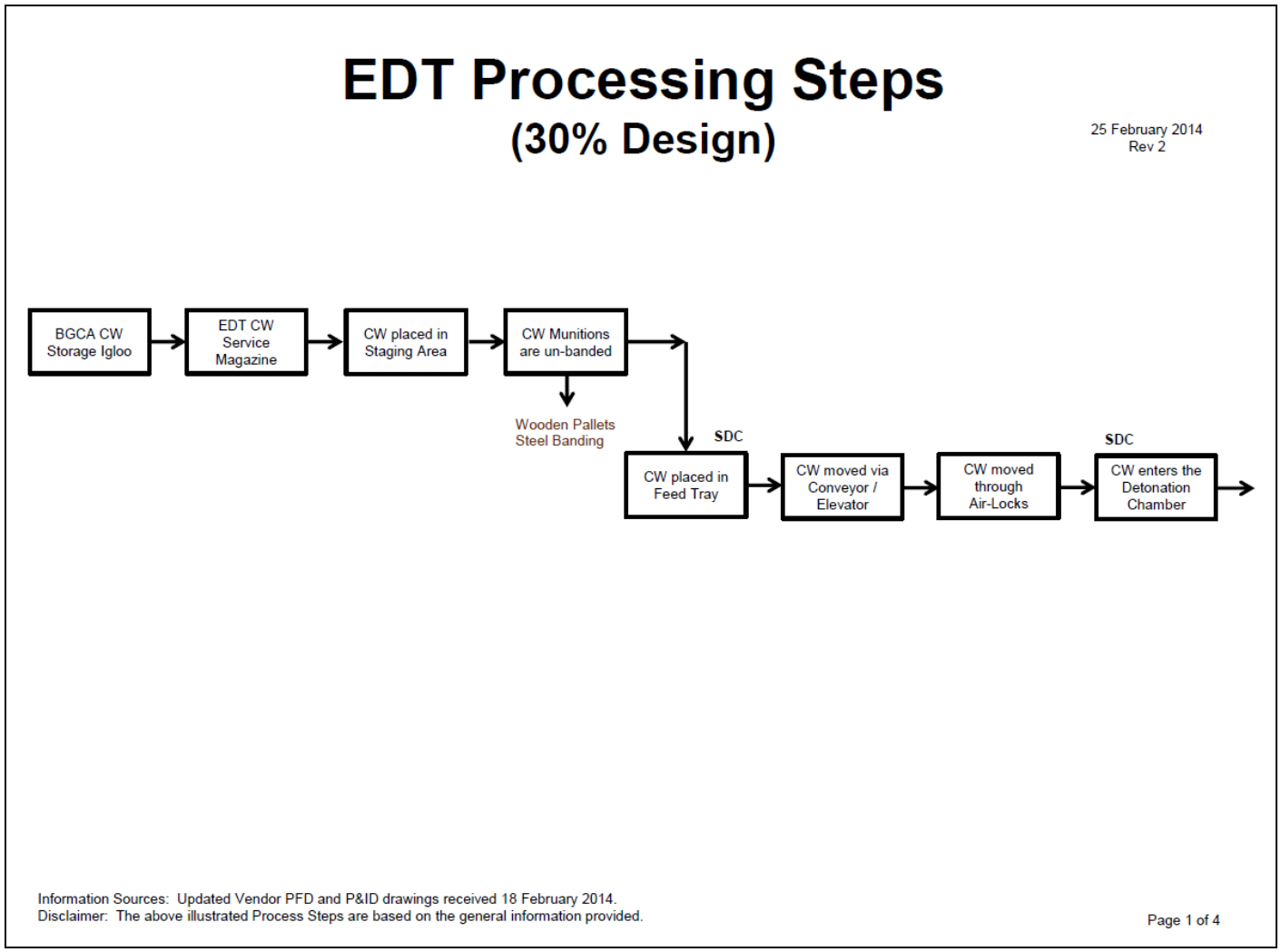

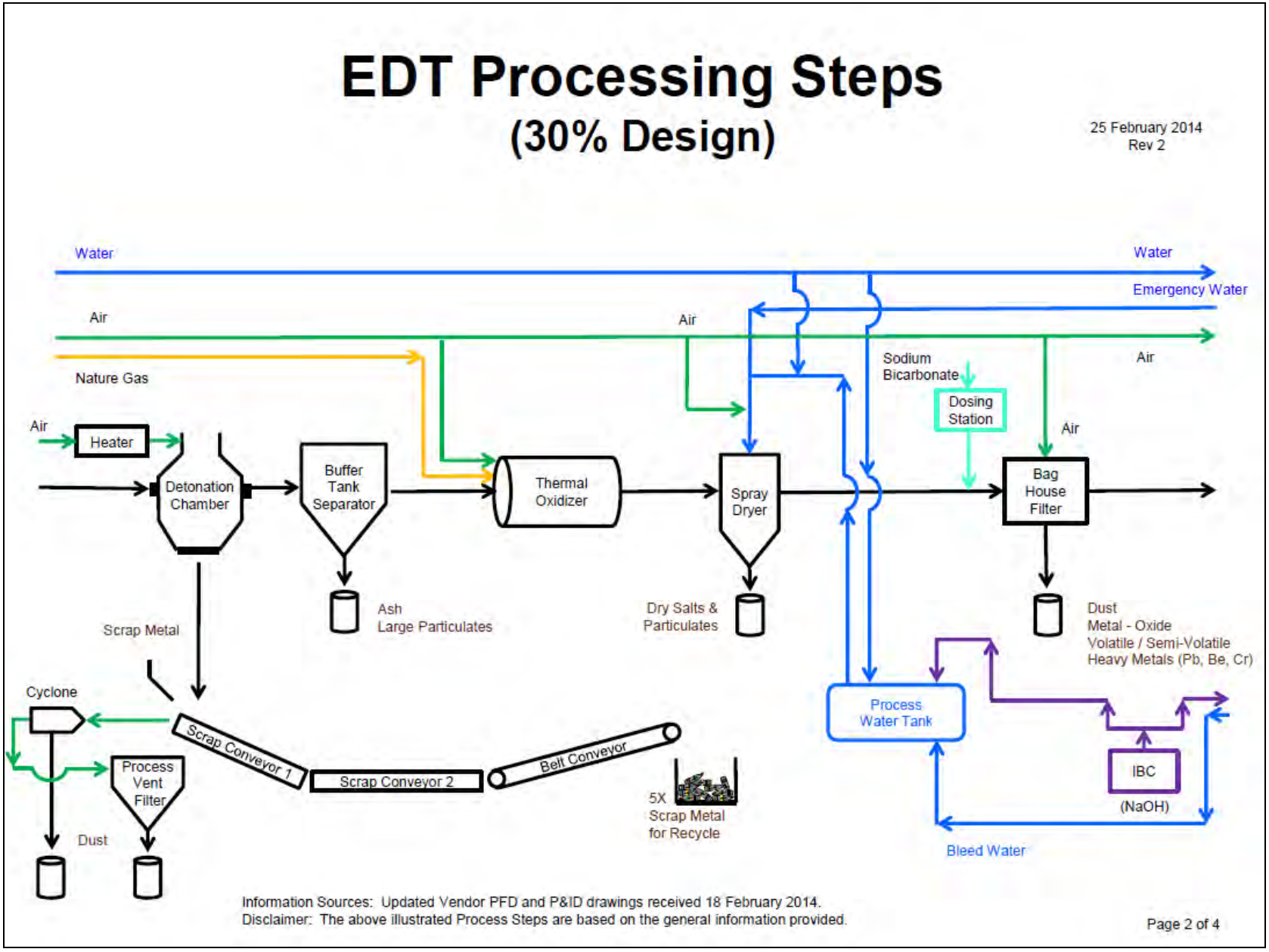
EDT Processing Steps
(30% Design)
25 February 2014
Rev 2
Water
Water
Emergency Water
Air
Air
Air
Nature Gas
Sodium Bicarbonate
Dosing Station
Air
Air
Heater
Detonation Chamber
Buffer Tank Separator
Thermal Oxidizer
Spray Dryer
Bag House Filter
Ash
Large Particulates
Dry Salts & Particulates
Dust
Metal - Oxide
Volatile / Semi-Volatile
Heavy Metals (Pb, Be, Cr)
Scrap Metal
Cyclone
Scrap Conveyor 1
Scrap Conveyor 2
Belt Conveyor
Process Vent Filter
Dust
5X
Scrap Metal
for Recycle
Process Water Tank
IBC
(NaOH)
Bleed Water
Information Sources: Updated Vendor PFD and P&ID drawings received 18 February 2014.
Disclaimer: The above illustrated Process Steps are based on the general information provided.
Page 2 of 4

This document contained Export Control/International Traffic in Arms Regulations Information.

EDT Processing Steps
(30% Design)

25 February 2014
Rev 2

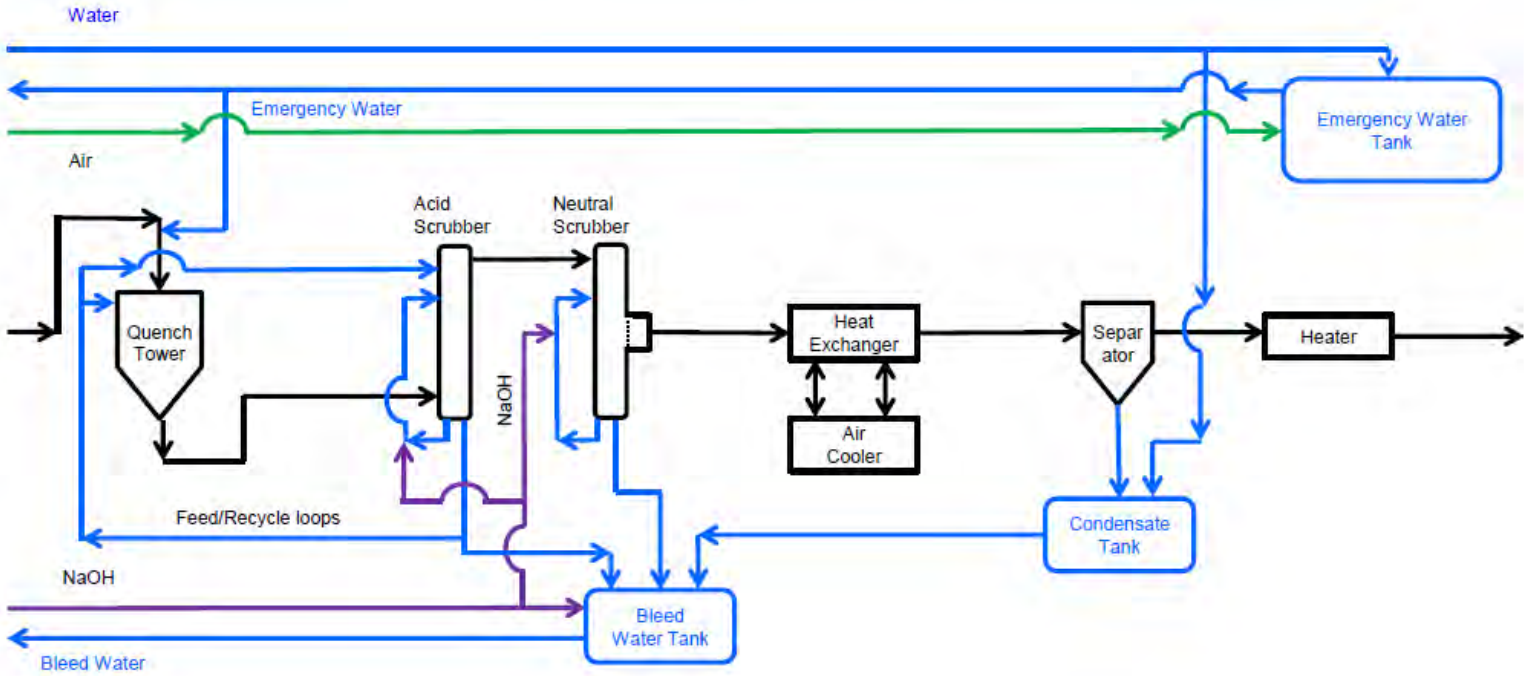

Dust
Chlorine, Hydrogen chloride
SOx

SOx
Chlorine
Heavy Metals

Information Sources: Updated Vendor PFD and P&ID drawings received 18 February 2014.
Disclaimer: The above illustrated Process Steps are based on the general information provided.

Page 3 of 4

1

This document contained Export Control/International Traffic in Arms Regulations Information.

EDT Processing Steps
(30% Design)

25 February 2014
Rev 2

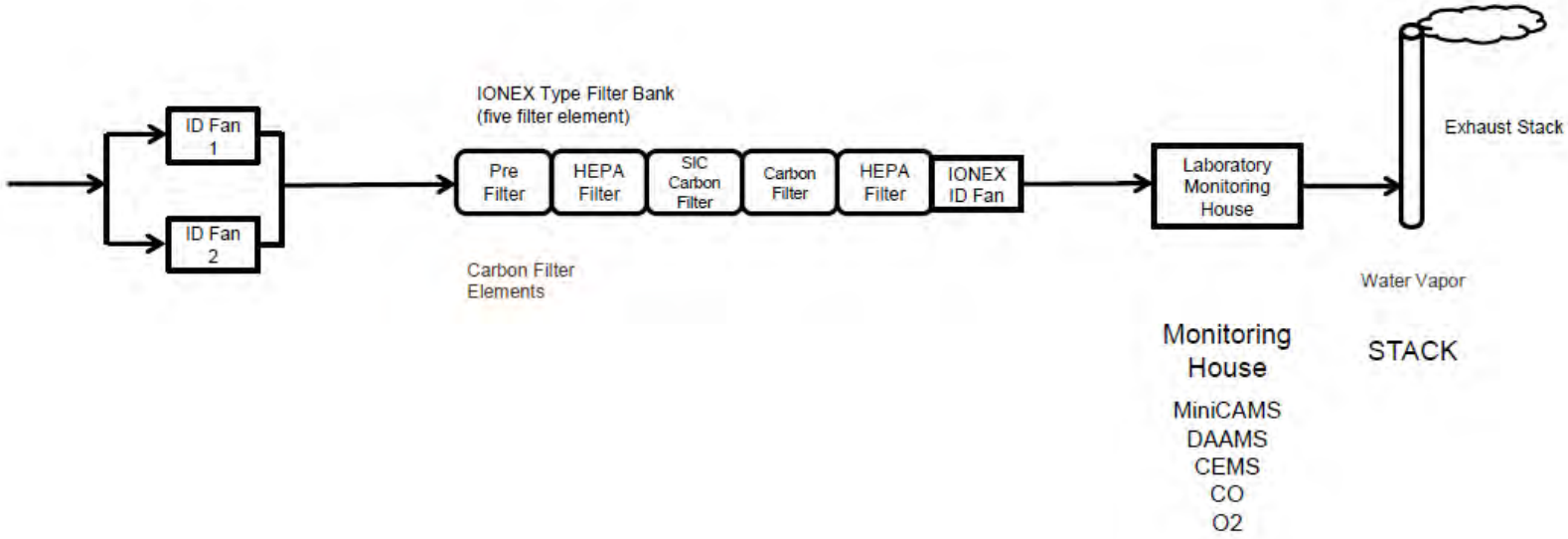

Information Sources: Updated Vendor PFD and P&ID drawings received 18 February 2014.
Disclaimer: The above illustrated Process Steps are based on the general information provided.

Page 4 of 4

1

This document contained Export Control/International Traffic in Arms Regulations Information.
(SENSITIVE INFORMATION REMOVED)

1. Purpose of the EDT Facility and Selection of SDC

The chemical agent stockpile includes thousands of the M110 155mm projectiles filled with Levinstein mustard (H), a chemical agent. Recent processing of identical lots of H-filled projectiles at TOCDF proved problematic because of high solids content, the presence of a heel, and, in some cases, the inability to remove the bursters from the projectile burster wells. A recent *X-ray Assessment of 155mm Projectiles Stored at Blue Grass Army Chemical Activity, Richmond, Kentucky* (2011), revealed that significant amounts of solids as agent heels are present in the chemical agent stockpile stored by the BGCA on the BGAD. TOCDF selected explosive destruction technology (EDT) as the alternative technology for disposal of the remaining H-filled projectiles that could not be destroyed using the originally selected demilitarization process.

The recent 2011 X-ray study assessed 96 of the palletized M110 H-filled projectiles and 80 of the M110 H-filled over-packed projectiles in the inventory stored by the BGCA. The assessment showed all of the projectiles have significant solids-containing heels. Over half of the 96 H-filled projectiles contained solids in excess of 50 percent, and only 3 of 96 had less than 20 percent solids.

Based on the problematic processing of mustard rounds at Tooele and the 2011 X-ray evaluation of mustard-filled projectiles stored by BGCA on BGAD, the EDT was selected as an alternative treatment for the mustard stockpile. The procurement process for the EDT selected the SDC manufactured by Dynasafe as the treatment/destruction equipment. Detonation-type destruction technologies rely on the ability of the energy from explosive charges and/or the expansion of liquid contents within a containment vessel to destroy chemical munitions efficiently and the agent and energetics contained therein. Detonation/deflagration processes destroy whole munitions, in discrete events.

2. Overview of Waste Transport, Waste Storage, Facility Design; and Destruction Process

Figure D-1 provides a simplified process flow diagram for the processing of the H-filled projectiles, over-packed projectiles, and DOT bottles starting with transport from storage. The major areas or equipment involved in the process are listed and described below [with transport and movement discussed in some detail (as transport and movement of this waste is identified as treatment in Commonwealth of Kentucky environmental regulations)].

a. Transport of Mustard-Filled Projectiles, Over-packed Projectiles, and DOT Bottles

This transport is regulated as treatment under existing Commonwealth of Kentucky environmental regulations [KRS 224.50-130(5)], is included in the Part A submitted with this application, and is part of the requested Class 3 Modification Request to the BGAD RCRA Permit. Therefore, transport of mustard-containing projectiles and DOT bottles is included in the Part A submitted with this application as treatment. This movement of H-filled munitions in EONCs is from the igloo aprons in the chemical storage area to the EDT Service Magazine. BPBG Team personnel will perform this transport.

(SIR)

Following formal acceptance of the filled EONC by signature on an accountability form at the apron of the storage igloo (i.e., custody of the projectiles, over-packs and DOT is transferred from BGCA to BPBG Team), the waste is transported to the Service Magazine by EDT Facility personnel for storage prior to processing.

(SENSITIVE INFORMATION REMOVED)

This document contained Export Control/International Traffic in Arms Regulations Information.

A truck pulling a trailer-mounted EONC will transport the projectiles, over-packed projectiles, and DOT bottles from the storage igloos to the Service Magazine. The EONCs will be unloaded at the Service Magazine by forklift and the pallets/skids of projectiles, over-packed projectiles, and DOT bottles will be placed into storage in the Service Magazine as described later in Part D. Due to the short distance involved, a forklift will transfer projectiles, over-packed projectiles, and DOT bottles from the Service Magazine to the EEB. The forklift will transport these items through the airlock and into the staging, preparation, and loading area within the EEB. These mustard agent containers will be placed on or within a temporary containment in the loading area. The projectiles and over-packed projectiles will be separated from their packaging using MHE and placed into the feed trays, which are then loaded onto the loading conveyor. Due to the lighter weight, the DOT bottles may be loaded by hand without using MHE.

The processing of the H-filled munitions and DOT bottles begins with the transport of these items from the EDT Service Magazine to the EEB. Forklifts and MHE used for unloading and movement of the items, as part of the treatment process, are sized for the waste being moved.

b. Storage in the Service Magazine

The Service Magazine is large enough to store sufficient quantities of projectiles, over-packed projectiles and DOT bottles for continuous operations of the EDT Facility. The Service Magazine is identified as a container storage area that will be used to store H-filled projectiles, over-packed H-filled projectiles, and the DOT bottles. EDT Facility personnel will unload the EONC and move the munitions into the Service Magazine. All munitions deliveries from the igloos to the Service Magazine and EONC unloading operations at the Service Magazine will be limited to daylight hours only.

c. Destruction Process:

Processing of the munitions and DOT bottles begins with the transport/movement of the projectiles and/or DOT bottles from inside the Service Magazine to the EEB containing the SDC. Palletized munitions are transported to the EEB in either a pallet configuration (which contains up to eight rounds banded together) or a skid configuration (consisting of three pallets banded together, which contains up to 24 rounds). Figure D-2 provides information on the projectile pallets. Since this movement precedes and is required as part of the treatment process in the SDC, it is considered part of the treatment process for the waste (i.e., in-process). Consequently, a separate entry was not recorded in the Part A: Kentucky Hazardous Waste Permit Application included within this Class 3 Permit Modification Request.

Within the negative pressure Loading Area, EDT Facility personnel utilize material handling equipment (MHE) to individually remove the M110 155mm H-filled projectiles from their storage pallet and load the munitions onto feed trays. After the munitions feed trays are loaded, the trays are remotely conveyed and transferred to the SDC unit for treatment. Feed trays (loaded with two projectiles) are fed one tray at a time into the DC. The next feed tray is not fed until the munitions within the prior tray have reacted within the DC (as the result of a detonation/deflagration event or after a designated hold time has expired). Gases generated in the DC during the SDC treatment process are captured and treated by the OTS. The air flowing from the OTS and the air flow from work areas within the building (containing the SDC) are exhausted into separate final filter units before being released to the atmosphere. These final filters include pre-filters, HEPA filters, and carbon adsorption beds for vapor removal. These filters provide the final treatment of air exhausted from both the SDC and OTS process, and the building itself. More detailed, additional information is provided under the descriptions for container management (e.g., projectiles and secondary waste) and the SDC.

This document contained Export Control/International Traffic in Arms Regulations Information.

Figure D-2: M110 155mm Projectile Pallet

Number of Rounds per M110 155mm (full) Pallet):
8 rounds (4 rounds across and 2 rounds deep)
Weight (fully loaded including dunnage): 797* - 831 pounds
* TM 42-0001-28
Dimensions:

NEW per (full) Pallet: 3.31 pounds
Three pallets are banded together to form a single skid containing 24 rounds.

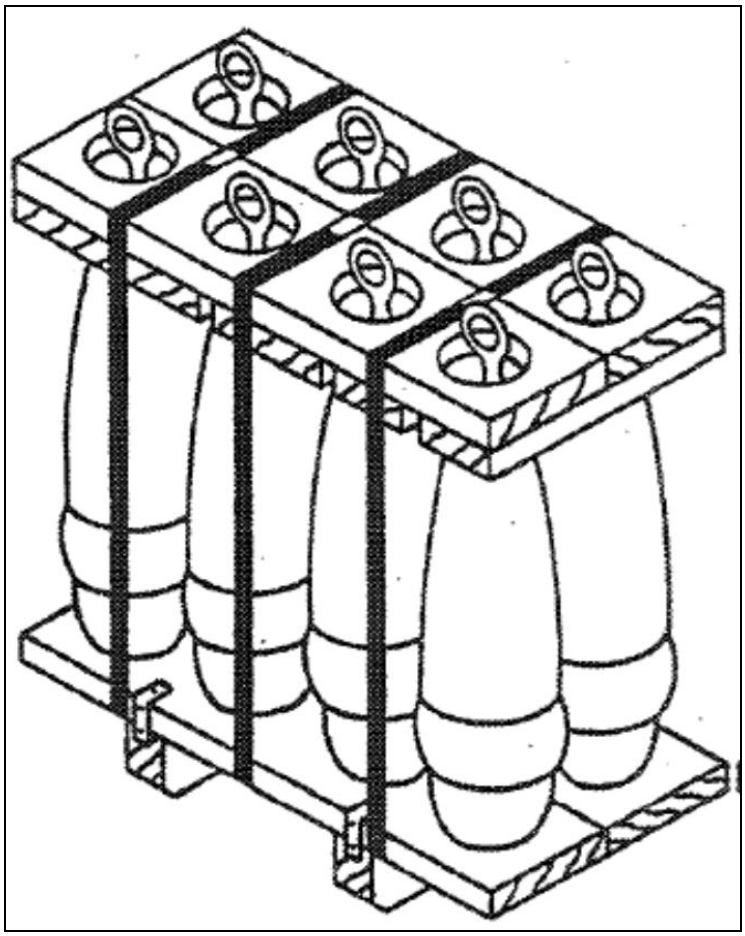

This document contained Export Control/International Traffic in Arms Regulations Information.

Actual Photograph of M110 155mm Pallet

d. Off-Gas Treatment System (OTS) treats the off-gases produced during the destruction process:

This OTS contains a range of devices and units designed, previously tested and demonstrated to provide adequate protection for the EDT Facility personnel, the public, and the environment. The OTS is described later in detail in section D-8, which describes the SDC/Subpart X, Miscellaneous Unit.

This document contained Export Control/International Traffic in Arms Regulations Information.

e. Final Filtration Unit for OTS:

The final filter unit provides a backup and final polishing step for the air flow from the SDC process, to include the OTS. This final filter unit includes a pre-filter, HEPA filter, and two carbon beds followed by a final HEPA filter prior to release of the air stream from the EDT Facility stack. Near real-time continuous air monitoring is provided by MINICAMS® located in the exhaust stack that runs through the Monitoring House.

f. Final Filter Unit for EEB and Secondary Vapor Containment

This final filter unit removes potential contaminants carried by the air flow from the EEB and the secondary containment surrounding the SDC process and designed to control vapor emissions from the process. This final filter unit also includes a pre-filter, HEPA filter, and multiple carbon beds followed by a final HEPA filter prior to release of the air stream from the unit's exhaust stack.

D-1: Containers [401 KAR 34:180 and 38:150 & 40 CFR 264.170–179 and 270.15]

D-1a: Container Management

Container Storage: The EDT Facility will not contain any RCRA >90-day, permitted container storage areas except the EDT Service Magazine, which will be used to store mustard wastes prior to processing in the SDC. The Service Magazine is being included as a permitted hazardous waste container storage area to ensure storage of the M110 155mm H-filled projectiles, over-packs, and DOT bottles are provided an area permitted for longer term storage (i.e., >90-days).

Figure D-3 shows the proposed storage arrangement inside the Service Magazine. The projectiles (in Department of Army approved pallets with three pallets banded together into a skid) will be stored in the Service Magazine. The pallet and skid configuration for these projectiles is shown in Figure D-2. Air monitoring of this storage facility will be performed using MINICAMS® and DAAMS. The concrete floor will be coated with a chemical agent-resistant coating similar to that used in the BGCAPP Main Plant.

Temporary (<90-day) storage will be used for containerized hazardous waste outside the Service Magazine. The EDT Facility will use drum liners and/or bags when placing non-liquid, secondary wastes into DOT-approved containers. The EDT Facility personnel will not store large quantities of free liquids in containers and plans to eliminate free liquids in non-liquid secondary waste containers as part of the waste packaging process. Secondary wastes will be packaged in polyethylene DOT-approved containers, with steel containers only occasionally used to package hazardous wastes. Therefore, for completeness, examples of both steel and polyethylene containers are provided. Hazardous wastes are also stored in various types and sizes of these containers. Table D-1 provides examples of the most commonly used containers.

Waste shipping containers meet DOT shipping requirements and these containers are marked with the appropriate DOT packaging authorization number. Storage of hazardous wastes within the facility may occur in portable tanks, roll-offs, boxes, and containers. The performance specifications for a specific container are determined based on the waste characteristics.

If containers other than those listed in Table D-1 are used, the containers comply with the appropriate DOT requirements or the EDT Facility personnel will transfer wastes into DOT-approved containers prior to transport offsite.

This document contained Export Control/International Traffic in Arms Regulations Information.

NOTE: Examples of exceptions to the use of DOT-approved containers for container storage at the EDT Facility may include, but are not limited to:

(1) EONCs provide airtight, secondary containment of chemical munitions during transport to the Service Magazine. These EONCs have design features that allow agent monitoring of the sealed EONC.

(2) Double plastic bags provide temporary (i.e., from a few hours up to several days) storage for secondary waste, including PPE, rags, spill pads, equipment, tools and similar items potentially contaminated with agent prior to monitoring and placing into DOT-approved containers in preparation for offsite treatment and disposal.

(3) Large portable containers (i.e., may not be approved by DOT for transport of hazardous materials) may be used to temporarily contain and store bulk liquid wastes during SDC maintenance or emergency response activities.

Containers stored in <90-day storage and projectiles filled with mustard agent stored in the permitted Service Magazine at the EDT Facility will comply with the following general container management standards:

(1) If any hazardous waste container/projectile is emitting vapors, personnel transfer the waste contents into a new container or the entire vapor emitting container/projectile is over-packed.

(2) Wastes identified as incompatible are stored in separate areas. Berms, dikes, walls or other physical barriers separate these areas. The same container does not receive incompatible wastes as each container is used for only one waste stream and personnel clean containers previously holding a waste or material before using the container for waste storage. Cleaning wastes will be appropriately characterized and managed.

(3) Containers of hazardous waste remain closed throughout storage, except to add or remove waste.

(4) Workers do not open, handle, or store containers in a manner that may rupture the container or cause it to leak. Pallets are used to the maximum extent possible to preclude puncture of containers and ensure storage above possible contact with moisture. Only employees trained to operate the MHE equipment will move the containers/pallets. MHE equipment used to move containers include pallet jacks, jib cranes, drum dollies, and forklifts.

(5) Projectiles in munitions pallets/skids within the Service Magazine and other containers within other portions of the EDT Facility are stacked no more than two high to maximize the use of space and ensure safe storage of containers/projectiles.

(6) The layout of the permitted container storage area (i.e., Service Magazine) provides sufficient aisle space (minimum of 30 inches) to allow ease of inspection and ensure equipment used to move projectiles in pallets/skids do not strike a projectile. Projectiles are stored within the secondary containment in the Service Magazine, do not contact the containment wall, and have sufficient space (between the berm or wall and the stored containers) to allow inspection and viewing of the stored containers.

(7) BGAD and BPBG Team policies and procedures forbid smoking within the EDT Facility except in designated areas. Hot work permits preclude open flames, cutting and welding, sparks and other ignition sources without a permit and appropriate special precautions or requirements. The EDT Facility personnel separate and protect ignitable or reactive hazardous wastes from sources of ignition or possible reaction. Containers holding ignitable or reactive wastes are located more than 15 meters (50 feet) from the BGAD's property boundary.

This document contained Export Control/International Traffic in Arms Regulations Information.

(8) If generator knowledge is insufficient, laboratory analyses and tests identify incompatible, reactive, and ignitable wastes and materials. Generator knowledge or laboratory results confirm precautions that can prevent reactions involving ignitable, reactive, and incompatible wastes.

(9) Label and mark each pallet or skid of projectiles, over-packed projectile, and DOT bottle in permitted storage with the words ~~H~~azardous Waste".

(10) Weekly (i.e., once between Sunday and Saturday of each week) inspections are conducted and documented for the container storage area in the Service Magazine (and also any other <90-day storage areas within the EDT Facility). The inspection includes the elements identified above, but focuses on identifying damage/deterioration of munitions and damage to or leakage/spills within the containment system in the Service Magazine.

This document contained Export Control/International Traffic in Arms Regulations Information.
(SENSITIVE INFORMATION REMOVED)

Figure D-3 – Proposed Storage Arrangement and Containment for the Service Magazine

The final design of the Service Magazine will be determined by the selected vendor and will be inserted here after it becomes available. The conceptual sketch will be provided to the potential vendors to support their Service Magazine final design.

(SIR)

This document contained Export Control/International Traffic in Arms Regulations Information.

D-1b: Containers with Free Liquids, and/or F020, F021, F023, F026, and F027 Wastes [401 KAR 34:180 Section 6 & 40 CFR 264.175]

The EDT Facility personnel do not anticipate storing F020, F021, F023, F026, or F027 wastes at this facility. The palletized projectiles stored within the permitted storage at the Service Magazine each contain approximately one-gallon of the Commonwealth of Kentucky listed hazardous waste – mustard agent with the hazardous waste number N003. The containment area within the Service Magazine (i.e., coated/concrete floor with water stops) used to store palletized projectiles, over-packed projectiles, and DOT containers includes sufficient volume to contain the largest container (i.e., one gallon) or more than 10 percent of the volume of mustard contained in the maximum number of projectiles that can be stored within the Service Magazine. Table D-2 contains the calculated volume of the secondary containment in the Service Magazine.

D-1b(1): Basic Design Parameters, Dimensions, and Materials of Construction for the Containment System [401 KAR 34:180 Section 6 & 40 CFR 264.175]

The design and construction of the containments within the Service Magazine meet the requirements of Federal RCRA and Commonwealth of Kentucky environmental regulations. The base for the containment in the Service Magazine is concrete with sufficient compressive strength to withstand the stress of material transport equipment and equipment used to move containers (i.e., projectiles, over-packed projectiles, and DOT containers). The concrete base of the containment supports a coating system that is impermeable and resistant to the mustard agent.

The floor space inside the Service Magazine is 29 feet long by 29 feet wide. The secondary containment has approximately the same surface area with some area subtracted to account for the trenches on each side of the magazine and the elevated area near the doorway designed to prevent rainfall from entering the magazine. The depth of this containment is expected to be approximately two inches and the resulting volume of the containment is approximately 1,024 gallons. However, the final design will be provided by the vendor and these dimensions and the resulting volume are approximate (i.e., final volume to be determined based on vendor final design).

The air handling system is designed to maintain the Service Magazine at temperatures that allow air monitoring. In addition, should the first entry air monitoring detect evidence of a vapor emitting H-filled projectile, the Service Magazine has duct work and a vent that can be opened to allow for the connection of a portable carbon filtration unit. This filtration unit will be used when a vapor-emitting item is detected by monitoring. This carbon filtration unit will provide sufficient ventilation under engineering controls to maintain the Service Magazine at a negative pressure and prevent the uncontrolled release of the mustard vapors to the environment during the activities required to enter the Service Magazine, and identify, segregate, and over-pack vapor emitting munitions.

D-1b(2): Description of How Design Promotes Drainage or How Containers are Kept from Contact with Standing Liquids in Containment System [401 KAR 34:180 Section 6, and 38:150 & 40 CFR 264.175 and 270.15]

The H-filled projectiles to be treated in the SDC are stored in pallets/skids (see Figure D-2) that elevate the projectiles (i.e., containers for the N003 hazardous waste – H) above the coated (i.e., with agent-resistant coating) concrete floor. The over-packed projectiles and the DOT bottles are stored on pallet bases that elevate the containers above the concrete floor more than four inches. In addition, the Service Magazine is constructed to prevent precipitation from entering the secondary containment and the concrete apron (which is the concrete slab at the entrance of the Service Magazine) slopes away from the storage area. These features combined with the routine entries (i.e., to move munitions into the SDC for treatment) and routine inspections of the Service Magazine will ensure standing liquids cannot accumulate and exceed the depth required to reach the stored munitions (i.e., containers).

D-1b(3): Capacity of the Containment System Relative to the Number and Volume of Containers to be Stored [401 KAR 34:180 Section 6 and 38:150 & 40 CFR 264.175 and 270.15]

The projectiles are transported from the BGCA storage igloos and stored inside the Service Magazine either as individual pallets of up to eight projectiles or in skids [i.e., three (3) times the eight (8) projectiles in each pallet or 24 projectiles in each skid).

Some pallets and skids in storage may not contain eight or 24 projectiles, respectively. These are known as ~~-s~~hort" pallets or skids, and based upon the number of projectiles that are absent, blocking and bracing may be needed to support and provide stability for the ~~-s~~hort" pallet or skid.

Vapor emitting munitions will be over-packed into secondary containment containers [e.g., propellant charge containers (PCCs) or single-round containers (SRCs)]. These over-packed munitions are stored upright within a wooden crate, mounted on a standard pallet that can be moved by a forklift. The DOT bottles also will be contained in a similar wooden crate-type container prior to destruction.

(SIR)

This document contained Export Control/International Traffic in Arms Regulations Information.

D-1b(4): Provisions for Preventing or Managing Run-on [401 KAR 34:180 Section 6 and 38:150 & 40 CFR 264.175 and 270.15]

The Service Magazine has weather-tight roof and walls with a raised threshold and a sloped entry to prevent run-on from entering the permitted storage area. The storm water control system at the EDT Facility is designed to capture and convey storm water from the site to the BGCAPP storm water detention basin.

D-1b(5): How Accumulated Liquids can be Analyzed and Removed to Prevent Overflow [401 KAR 34:180 Section 6, and 38:150 & 40 CFR 264.175 and 270.15]

If generator process knowledge is not adequate to determine the characteristics of accumulated liquids, the BPBG Team conducts analyses in accordance with Part C of this Permit Modification Request to determine waste characteristics. After the characteristics of the liquid are known, then removal and treatment and/or disposal will follow. Within 24-hours of discovery, liquids will be removed from the secondary containment (to the maximum extent possible, based upon the agent reading, engineering controls, and safety requirements) as required by RCRA regulations. If liquid waste is not sufficiently characterized to allow treatment and/or disposal, the liquid waste will be placed into an appropriate DOT container or temporary tank for storage in a <90-day storage area. DOT containers will be on a containment pallet. Wastes will be stored until characterization is complete and treatment and/or disposal can be arranged.

D-1c: Containers Without Free Liquids and/or F020, F021, F023, F026, and F027 Wastes [401 KAR 38:150 Section 2 and 34:180 Section 6 & 40 CFR 270.15(b) and 264.175]

Management of the H-filled projectiles, over-packed projectiles, and DOT bottles in the Service Magazine does involve free liquids and the design of the secondary containment for containers includes capacities that exceed the containment capacities required by Federal and Commonwealth of Kentucky environmental regulations (i.e., liquid volume of largest container or 10 percent of total liquid volume in all containers). The EDT Facility Permit Modification Request does not include a request for a waiver for storage of containers without free liquids. Furthermore, there are no plans to store F020, F021, F023, F026, or F027 wastes in the Service Magazine or elsewhere within the EDT Facility.

D-1c(1): Test for Free Liquids [401 KAR 38:150 Section 2 & 40 CFR 270.15(b)]

Through this Permit Modification Request, the BGCAPP Project requests designation of the Service Magazine as the only permitted storage area in the EDT Facility. The H-filled palletized projectiles, over-packed projectiles, and DOT bottles stored in this container storage area do contain liquid waste (i.e., Mustard – a chemical agent with the Commonwealth of Kentucky Waste Number of N003). This modification does not include a request that this storage be identified as "not storing liquids," therefore, the Paint Filter Liquid Test, Method 9095 for free liquids in SW-846 is not necessary or applicable.

This document contained Export Control/International Traffic in Arms Regulations Information.

D-1c(2): Containment System Drainage

Criteria previously addressed in paragraph D-1b, above.

D-1c(3): Containment System Capacity

Criteria previously addressed in paragraph D-1b, above.

D-1c(4): Control of Run-on

Criteria previously addressed in paragraph D-1b, above.

D-1c(5): Removal of Liquids from Containment

Criteria previously addressed in paragraph D-1b, above.

D-1c(6): Description of Storage Area Design and Operation to Drain and Remove Liquids or How Containers Are Kept from Contact with Standing Liquids

Criteria previously addressed in paragraph D-1b, above.

D-1d: Requirements for Ignitable or Reactive Wastes and Incompatible Wastes [401 KAR 34:180 Sections 7 and 8 & 40 CFR 264.176 and 264.177]

Permitted storage in the Service Magazine includes only storage of the H-filled palletized projectiles, over-packed projectiles, and DOT bottles. These wastes are not ignitable, or incompatible, however due to the presence of tetryl in the projectile bursters these items are reactive (D003).

Less than 90-day storage of any other containers holding ignitable wastes in the EDT Facility will be located more than 50 feet from the BGAD facility property line. Miscellaneous O&M or laboratory chemicals may prove to be ignitable, reactive, or incompatible, but the SDC process is not expected to generate ignitable, incompatible, or reactive wastes for storage in containers. However, if laboratory analyses indicate the presence of liquid reactive, ignitable, or incompatible wastes, these wastes will be placed on a containment pallet separated from other wastes by a distance of at least 4 feet, and located more than 50 feet from the BGAD facility property line. The containment pallets have a secondary containment capacity of at least 55 gallons. That is more than 10 percent of the maximum storage capacity of the containers on the containment pallet and equal to or greater than a single 55-gallon drum.

The BPBG Team personnel wash empty waste containers prior to reusing. If questions arise about whether wastes are compatible, the EDT Facility conducts laboratory incompatibility determinations prior to storing containers containing different waste streams near each other.

D-2: Process Information: Tank Systems [401 KAR 34:160 and 34:190 & 40 CFR 264.190 and 270.16]

Not applicable. EDT Facility waste management units do not include tank systems.

This document contained Export Control/International Traffic in Arms Regulations Information.

D-3: Surface Impoundments [401 KAR 34:200 and 38:170 & 40 CFR 264. 220 and 270.17]

Not applicable. EDT Facility waste management units do not include surface impoundments.

D-4: Waste Piles [401 KAR 34:210 and 38:180 & 40 CFR 264.250 and 270.18]

Not applicable. EDT Facility waste management units do not include waste piles.

D-5: Land Treatment [401 KAR 34:220 and 38:200 & 40 CFR 264.270 and 270.21]

Not applicable. EDT Facility waste management units do not include land treatment.

D-6: Landfill Design [401 KAR 34:230 and 38:210 & 40 CFR 264.300 and 270.20]

Not applicable. EDT Facility waste management units do not include landfills.

D-7: Incinerators [401 KAR 34:240 and 38:190 & 40 CFR 264.340 and 270.19]

Not applicable. The SDC's Detonation Chamber does not have a controlled flame, only uses indirect heating, and is therefore not an incinerator by definition.

D-8: Miscellaneous Units [401 KAR 38:230 and 34:250 Section 2 & 40 CFR 270.23 and 264.601]

This section addresses the treatment of munitions containing mustard agent inside the SDC at BGAD with BPBG Team as the operator. This section describes the SDC treatment processes. The SDC does not fit the definitions for other types of treatment units (i.e., sections D-1 through D-7, above) and is therefore categorized as a miscellaneous waste treatment (Subpart X) unit under the RCRA.

D-8a(1): Description [401 KAR 38:230 and 34:250, Section 2 & 40 CFR 270.23(a)(1) and 264.601]

Process components in the SDC design are similar to those successfully used at the GEKA Facility in Munster, Germany and ANCDF in Anniston, AL to destroy mustard-filled projectiles (with modifications to incorporate lessons learned). This section describes the treatment process used in the EDT Facility for munitions and the DOT bottles containing mustard agent. The preliminary concept for layout of the EDT Facility is shown in Figure D-4.

This document contained Export Control/International Traffic in Arms Regulations Information.

D-8a(1): Description of Miscellaneous (Subpart X) Unit: SDC

The SDC unit is a batch-processing device and is designed to destroy chemical munitions whether configured with explosives or not. The SDC uses indirect conductive heating to destroy munitions by auto-ignition leading to either detonation or deflagration (the predominant form of destruction) and does not require the use of explosive donor or counter charges to destroy munitions. Over-packed munitions also can be processed without being removed from the over-pack container. The unit is designed and built to eliminate worker or public exposure to explosive or environmental hazards during operations, and to produce products that are environmentally acceptable. The system is designed with interlocks and redundant systems for safety purposes and to prevent release of untreated products. The emissions from the SDC flow through the OTS, a series of devices designed for and permitted under air quality regulations, to remove harmful contaminants and ensure the concentration of these contaminants does not result in adverse effects in workers, the general public, or the environment. The layout of the EEB, including the OTS equipment in and around the EEB, is shown in Figure D-5.

(a) Treatment of Chemical Munitions

Projectiles, over-packed projectiles, and DOT bottles are placed into feed trays. A maximum of two 155mm H projectiles will be placed in a tray. The over-packed projectiles and DOT bottles will be fed one per tray. The trays are placed on a loading system that transports one tray or batch at a time into the DC. The loading conveyor is designed to accept multiple trays prior to transporting a tray to the DC. The transport procedure is started remotely from the control room after the completion of tray-loading activities.

When tray-loading activities are complete, the loading operator leaves the loading area, then the control room (CON) operator stages a feed tray in loading chamber 1 (LC1). The feed tray (batch) is transported to the munitions lift conveyor. The munitions lift conveyor raises the tray to the level of LC1. The pneumatic seal that keeps Gate 1 airtight is deflated and Gate 1 LC1 is opened, the tray is conveyed then pushed into LC1 with an electrically operated pusher. The pusher retracts, Gate 1 is closed, and its pneumatic seal is inflated. At this point the loading system pauses until the Control Room (CON) operator acknowledges that the tray is ready to load into the DC. All tray movements from the loading conveyor to LC1 are automatic.

Once all safety and feed prohibitive interlocks (FPI) are met, the CON operator acknowledges that the tray is ready to load into the DC. The pneumatic seals for the second airtight gate between loading chambers 1 and 2, Gate 2, are deflated and Gate 2 is opened. The tray is pushed into the cradle assembly inside loading chamber 2 (LC2) with a hydraulic pusher. The pusher retracts, Gate 2 is then closed and the pneumatic seals are inflated. The fragment valve is lifted off the opening to the DC, and the fragment valve/cradle assembly is rotated 90 degrees causing the tray to fall down into the DC. The fragment shield and cradle assembly is then rotated back into the loading position and a hydraulic cylinder presses the assembly down to close the fragment valve over the DC opening. LC2 and Gate 2 are designed to contain detonations or fragments equal to the design limit of the DC. The fragment valve acts as a shield between LC2 and the DC.

After the tray is fed to the DC, the projectiles are heated resulting in detonation and/or deflagration. As there is insufficient air contained within the DC to support complete combustion of the detonation products, the result is a pyrolysis reaction, which breaks down gases to simple compound, which are then further treated in the Offgas Treatment System (OTS). Figure D-6 is a graphic showing some of the major components associated with the DC.

This document contained Export Control/International Traffic in Arms Regulations Information.

(b) Loading Conveyor System

The loading conveyor system is powered electrically and consists of a/an:

- Series of conveyors that transport the feed trays to the munitions lift conveyor
- Lift conveyor that elevates the feed trays to level of the loading chamber 1 (LC1) and conveys the tray towards LC1
- Electric pusher that pushes the feed tray into LC2

i. Gate 1

Gate 1 is the inlet hatch to loading chamber 1. It is a sliding gate and operated hydraulically. A pneumatic seal mounted on the LC1opening provides an airtight seal when inflated against Gate 1. A hydraulic pusher is mounted on Gate 1, which pushes the feed tray into loading chamber 2.

ii. Loading Chamber 1

Loading Chamber 1 serves as an airlock and staging area for a feed tray prior to loading into LC2 and the DC. LC1 is sealed by Gate 1 and Gate 2. For decontamination prior to maintenance activities, LC1 may be filled with a water-based solution to evacuate gases to the process ventilation system. The decontamination solution is pumped from a reserve flush tank up to LC1. To remove the solution a valve is opened and the solution flows back to the tank by gravity.

iii. Gate 2

Gate 2 is the inlet gate to loading chamber 2. It is a sliding gate and operated hydraulically. The gate is designed to be sealed airtight with four pneumatic seals. It is designed to withstand explosions up to 6.61 pounds TNT equivalent.

iv. Loading Chamber 2 and Cradle

Loading chamber 2 is designed to withstand the pressure and the fragments within the DC. LC2 houses the cradle and fragment valve assembly. After the feed tray is pushed into the cradle and gate 2 is closed and sealed, the cradle assembly rotates 90 degrees and the feed tray falls into the DC. The cradle and fragment valve assembly then returns to its home position. A hydraulic cylinder presses down on the assembly to close the opening of the DC. Both positions of the cradle assembly may be monitored by cameras so that both a successful loading of the feed tray and a successful fall into the SDC can be assured.

(c) Destruction of Munitions or DOT Bottle in the SDC

The projectiles and over-packed projectiles are fed into the DC and land on the hot scrap bed of material at the bottom of the DC. The munitions are heated above the auto-ignition temperature until either a deflagration or detonation occurs and the explosives in the munitions are destroyed. The destruction process is identified by the dynamic pressure sensor and/or the static pressure sensor, aided by a sound sensor, and expiration of holding time.

This document contained Export Control/International Traffic in Arms Regulations Information.

Since the DOT bottles have no explosive components, the SDC vendor will determine and demonstrate the method for accessing the contents of the DOT bottle to allow mustard destruction within the DC. The SDC vendor has offered testing to determine whether a Boiling Liquid Expanding Vapor Explosion (BLEVE) will occur due to the heated expansion of the agent within the DOT bottles. An alternative approach for accessing and destroying the mustard agent contained in liquid within the DOT bottles will use a glove bag (with a carbon filter element), to remove the closure plug from the bottle and replace it with a thermally-degradable closure device prior to loading into the feed tray.

Following feed of projectiles, over-packed projectiles, or a DOT bottle into the DC, these objects are heated indirectly until the explosives (if present) deflagrate or detonate. The size, shape, confinement, and type of explosives and chemicals determine the type of reaction that will occur. The most common reaction for projectiles is deflagration. It is less common that detonation occurs, but it does occur occasionally. Mustard agent is released when the munitions are breached during the deflagration or detonation event.

The liquid mustard agent in the M110 155mm H-filled projectiles, over-packed projectiles, and the mustard in the DOT bottles is destroyed and removed to 99.9999 percent or greater by the SDC and its associated OTS. The SDC Facility, to include the OTS, is being permitted under a Commonwealth of Kentucky Title V Air Quality Permit.

The heat is generated by electric heating elements located between the DC and the outer shell. This heat is indirect and does not involve a controlled flame. The metal scrap remaining in the DC also serves to protect the chamber and provide residual heat. During the destruction process, the pressure and temperature inside the DC are monitored and recorded in the control room. Heated sweep air is added continuously to the DC during operation.

To eliminate potential overpressure peaks coming from the SDC, the off-gases shall pass through a buffer (expansion) tank to reduce such pressure peaks before the gases are transferred to the downstream OTS.

(d) Detonation Chamber

The upper part of the DC is mounted to the outlet flange of LC2. Connections for incoming process air, outlet exhaust gases, temperature sensors, and pressure gauges are placed on the DC upper part.

The lower part of the DC has an inner fragment shield liner, an outer chamber, and a cover assembly. The space between the chamber and scrap chute is filled with insulation. Electrical resistance-heating elements are located at the bottom and sides of the DC.

i. Locking and Sealing System

The upper and lower parts of the DC are locked to each other with a locking ring during destruction. The locking ring is maneuvered by two hydraulic cylinders. For the emptying procedure, the locking ring is turned to the open position, allowing the lower part of the DC to be lowered and turned. The connecting surfaces between upper and lower part of the DC is sealed by three pressurized pneumatic gaskets during destruction.

ii. Elevating and Turning System

When emptying the DC, the lower part of the DC is first lowered by the hydraulically powered mechanical lifting jacks and a hydraulic motor, connected to the lower part of the DC vertically rotates and tilts. This elevating and turning system dumps scrap metal from the DC.

This document contained Export Control/International Traffic in Arms Regulations Information.

iii. Hydraulic Power Unit (HYPU)

The HYPU provides power to operate the following systems:

- The elevating and rotating system for the SDC
- The tilting motor
- Gates 1 and 2
- The locking ring
- The feed tray pushers

The HYPU has a built-in backup pump that is driven by the uninterrupted power supply (UPS).

iv. Scrap Chute and Scrap Conveyor

When SDC Facility personnel determine (based on the calculated volume of the material being fed) the DC should be emptied of treated material, the lower part of the DC is brought down and then rotated so the majority of the scrap material can fall down the scrap chute to the scrap conveyor.

Additional scrap bed materials may need to be fed prior to resuming munitions processing, based on the amount of the scrap bed material remaining in the DC after dumping of the scrap metal.

NOTE: The scrap metal serves to protect the bottom of the DC and also aids in the treatment process as it assists in maintaining the heat within the DC by conducting heat. Scrap metal and other residue are considered ~~-in~~ process" until emptied from the DC.

v. Scrap Conveyor System

The scrap conveyor system is a series of vibrating and belt conveyors including a scrap inspection area. The vibrating conveyors serves as a staging area for agent monitoring and cooling of hot scrap material dumped from the DC. Fine particulates that become airborne in the conveyor system while conveying scrap are captured in a dust collection system. The scrap inspection area allows visual inspections of treated projectile bodies as it transitions to the scrap belt conveyor. Inspection serves to verify munitions have been treated and sufficiently deformed for treaty purposes. The belt scrap conveyor transfers the scrap metal into a collection bin.

vi. Detonation Chamber Air Heater

The DC Air Heater heats the air prior to entering the DC. The DC is continuously fed with this heated air that sweeps the gases from the DC into a buffer tank during the destruction process.

vii. Reserve Flush Tank

The reserve flush tank can contain either a water based solution or a decontamination solution that may be used to flush loading chamber 1 to support decontamination. The solution is pumped into LC1 and, when desired, flows back into the tank by gravity. The solution can be pumped into the DC for destruction. The reserve flush tank is used to decontaminate loading chamber 1 and is not used during normal operation.

This document contained Export Control/International Traffic in Arms Regulations Information.

(e) Off-Gas Treatment System (OTS)

The OTS system is an air pollution control system that includes a buffer tank that dampens pressure pulses caused by the deflagrations and detonations within the DC. The buffer tank's design also provides a cyclonic effect for removal of large debris and particulates, is followed by an orifice that also helps to smooth the flow going to downstream components of the system. Following this orifice, the gas is heated within a thermal oxidizer to approximately 1,800°F for at least two seconds, then cooled by a spray dryer, particulates are removed in a dry bag house filter, a quench further cools the gases, and then any remaining contaminants are removed by two wet scrubbers. The last step is a final filter unit, which acts as a backup to the OTS system and polishes the air stream prior to its release to the environment. It should be noted the entire OTS system from the exit of the DC to the final filter unit is maintained at a temperature that reduces condensation. Figure D-7 and Figure D-8 are graphical images of the OTS process equipment and a reverse angle of this same process equipment. Descriptions of these OTS devices and units are provided below.

i. Buffer (equalization) Tank

This unit is designed to smooth gas pressure and volume surges from the SDC that occur whenever a projectile detonates or deflagrates within the DC. By smoothing pressure surges, the design of downstream equipment is simplified and the equipment is better able to operate near its optimum design flow rate. This aids consistent removal of contaminants.

The buffer tank is a cone bottom cylindrical tank made of stainless steel. The inlet and outlet of the tank are designed to provide a cyclonic effect allowing the removal of large particles of ash and denser metal fragments from deflagrations and detonations. These materials are collected in the bottom of the conical tank section and are periodically removed. The main purpose of the buffer tank, however, is to smooth pressure peaks coming from the DC caused by the deflagrations and detonations, before the gases are transferred to the downstream OTS. The dust and debris that accumulate in the buffer tank can be emptied into a commercial off-the-shelf closed container (standard steel drum) for disposal.

The entire tank and all piping are maintained at a temperature using electric heaters and insulation. The exhaust duct, buffer tank, and associated piping are maintained at approximately 300°C (approximately 572°F) to reduce condensation, and are enclosed within the secondary vapor containment system to prevent gas or vapor escape.

ii. Orifice

The orifice plate also helps to smooth the flow of gases presented to downstream equipment. The orifice plate is comprised of a sharp edged orifice located in a stainless steel metal plate that is installed between two pipe flanges. This plate is replaceable if needed, and also is maintained near the temperature of the gas stream exiting the buffer tank (approximately 570°F) using electric heaters and insulation.

iii. Thermal Oxidizer

The off-gases resulting from the pyrolysis process in the SDC are transferred to a thermal oxidizer. The thermal oxidizer is designed to accept all gases resulting from one batch or feed cycle into the DC. The thermal oxidizer is oversized for this peak flow and is designed to accommodate twice the anticipated flow. The entire OTS also is designed to accommodate feed rates greater than the design for the detonation.

This document contained Export Control/International Traffic in Arms Regulations Information.

The thermal oxidizer uses natural gas as a fuel to enable the development of the high temperatures required. The thermal oxidizer design is based on a residence time of two seconds or more at approximately 1,900°F for the peak load expected from the upstream DC. An additional flow of secondary air is automatically added to ensure an oxidizing environment. The gases to be treated are fed tangentially via a ring system to ensure proper treatment of the contaminated gases. The ducting from the DC and buffer tank to the entrance of the thermal oxidizer is heated to ≥475°F to prevent condensation. Associated inlet ductwork to the thermal oxidizer is equipped with secondary vapor containment to capture any gases or vapors emitted in the event of a leak.

iv. Spray Dryer

The off-gas coming from the thermal oxidizer exits with a temperature of approximately 1900°F. The spray dryer is a cylindrical vessel with a conical bottom. Hot flue gas from the thermal oxidizer is introduced at the top and flows downwards to the exhaust pipe. The cooling water is injected by a dual fluid spray gun (process water and atomizing air) with a high-pressure pump and plant air. The off-gas is cooled rapidly to approximately 350°F by the injection of water into the gas stream. The injected water will evaporate and the energy needed for the evaporation is taken from the off-gas so the gas will rapidly cool. The water injection or quench takes place in the spray dryer, which is positioned at the inlet of the next treatment stage, the bag house filter.

The spray dryer uses spent process water from the process water tank and subsequently evaporates this water, leaving dry salts and particulates for disposal and removing the need for a water treatment system to process spent scrubber solutions. The spray dryer has a conical bottom and the dry salts, remaining liquids and solid particulates are removed from the conical bottom of the spray dryer and collected in a container (drum). A portion of the dissolved salts and other contaminants are carried from the spray dryer by the gas stream to the downstream bag house filter.

v. Bag House Filter

A bag house filter is located after the spray dryer. This unit is comprised of wire supports and filter socks made of Teflon® fibers used as a filtering media. Most of the dust (including larger diameter metal oxide containing dusts from the metallic contaminants in mustard) and a portion of the volatile/semi-volatile heavy metals (e.g., lead, beryllium, and chromium) are removed in the bag house filter.

The removal of the dust and salts occur as the off-gas passes through the outer surface of the filter elements and removal is improved by the formation of a filter cake. The dust is collected at the bottom funnel of the bag house filter and transferred to drums. The bags have a layer of absorbent material added, which is automatically renewed on a periodic basis. Most of the dust and heavy metals are removed in this unit. A hopper, screw feeder, and pneumatic feed system add sodium bicarbonate to the layer of spent material on the inside of the bags. This allows a fresh surface to be presented to the incoming gases at all times. Periodically when the pressure drop across the filter exceeds a set point, the bags are emptied using an air pulsing system, and the spent solids with the collected process dust is emptied into a drum for disposal.

vi. Quench Venturi

The temperature of the off gas exiting the bag house filter is still at too high for downstream components. The injection of an aqueous solution through the quench venturi cools the air from approximately 350°F to a temperature range between approximately 150 to 175°F. This is done with scrubber solution water from a sump in the bottom of the acid scrubber. The excess water remaining from this step is recycled to the acid scrubber.

This document contained Export Control/International Traffic in Arms Regulations Information.

vii. Acid Scrubber

The acid scrubber is a counter current design where the scrubber liquid flows counter current to the gas flow. The acid scrubber removes several contaminants from the off-gas. Initially, dust is removed by washing out solid particles in the scrubber tower. Acid gases, to include chlorine, hydrogen chloride, and some sulfur dioxide gases also will be removed from the off-gas. These components dissolve in the scrubber liquid making it acidic and increases conductivity.

Scrubber liquid is pumped from the bottom of the scrubber column to the top and is distributed inside the column by spray nozzles. The off-gas enters the column from a position located just above the column sump and streams from the bottom to top of the column. In order to ensure an adequate mixing and contact between the liquid and the gas, the columns middle section is filled with a column packing material. The acid scrubber is constructed of fiberglass and should be protected from overheating. As a safeguard, the temperature of the off-gas inlet is monitored. In case of a high off-gas temperature, due to a quench malfunction, an emergency water injection will be switched on.

A conductivity sensor monitors the liquid to ensure the liquid‘s salt and solid concentrations do not exceed design values. High conductivity indications results in a portion of the scrubber liquid to be diverted to the Bleed Water Tank (BWT). The volume of water transferred to the BWT is replaced with fresh water controlled by a level control system in the scrubber sump.

viii. Neutral Scrubber

After the acid scrubber, the off-gas is fed to the neutral scrubber. The neutral scrubber removes any residual contaminants (e.g., chlorine and sulfur dioxide) and heavy metals that passed through the spray dryer and acid scrubber. The neutral scrubber is similar in construction to the acid scrubber with two exceptions. These exceptions are the neutral scrubber operates with a co-current gas liquid flow (i.e., the gas and scrubber liquid flows in the same direction) and the pH of the sump is monitored and controlled in addition to the conductivity.

The scrubber liquid is monitored by a pH controller. Sodium hydroxide solution from an Intermediate Bulk Container (IBC) is used to maintain the proper neutral pH. The amount of scrubber liquid in the neutral scrubber is controlled by a level transmitter in a sump at the bottom of the scrubber column.

Like the Acid Scrubber a conductivity sensor also monitors the liquid in the scrubber sump to ensure the liquid‘s salt and solid concentrations do not exceed design values. High conductivity indications results in a portion of the scrubber liquid to be diverted to the Bleed Water Tank. The volume of water transferred to the BWT is replaced with fresh water controlled by a level control system in the scrubber sump.

A mist eliminator is installed after the neutral scrubber outlet to remove water droplets in the gas flow.

ix. Moisture Removal Heat Exchanger

To remove excess moisture present in the saturated air coming from the Neutral Scrubber, a moisture removal system is installed in the SDC OTS. This unit consists of a heat exchanger, moisture separator, and cooling unit. This moisture removal is needed to protect the ID fans, filters, and carbon in the final filter. The re heater is an electric unit that is designed to heat the gas stream to reduce condensation and prevent it from collecting on the filters or in the activated carbon within the final filter unit. A condensate pump redirects the reclaimed liquid back to the neutral scrubber sump.

This document contained Export Control/International Traffic in Arms Regulations Information.

x. Induced Fans (ID Fans)

The ID fans are located downstream after the re-heaters. The ID fans ensure the pressure in the OTS is below atmospheric pressure. The pressure is controlled by pressure transmitters in the thermal oxidizer. The speed of the ID fans is adjustable by a frequency controller. The pressure is mainained below atmospheric to ensure no contaminated off gas is released into the environment. The ID fans work continuously in automatic during the operation of the facility. There are two fans installed, if one fails, the other will automatically start.

xi. Final Filter Unit for OTS

At this point, the off-gas has been thoroughly cleaned and treated. The emissions tests performed at Anniston Chemical Agent Disposal Facility (ANCDF), AL have shown the destruction efficiency to be greater than 99.9999 percent for mustard type agents. However, a filter unit will be installed to provide an additional measure of safety should an unforeseen circumstance occur. This system provides a continuous backup for the SDC OTS in the event of system malfunction. This final filter unit will ensure that, in the unlikely event any agent vapor or organic compounds remain, these contaminants will be captured. The OTS final filter unit design contains pre-filters, HEPA filters and carbon filters one of which is sulfur impregnated carbon. Sampling ports between filters are provided to allow agent breakthrough monitoring for early warning of potential breakthrough.

The exhaust filter system housing is made of stainless steel and is equipped with differential pressure monitors to ensure adequate flow and to monitor for particulate buildup on the filters. Filters within the unit use a bag in/bag out system so operators changing the filters never contact the actual filter media. The OTS final filter unit includes an ID fan to provide negative pressure and protect against outward leakage.

(f) Stack

The height of the stack for discharge of cleaned gases meets the requirements of the American Conference of Governmental Industrial Hygienist (ACGIH) industrial ventilation manual.

(g) Monitoring

The treated off-gas is released to the downstream final filter unit. An agent monitoring (MINICAMS®) port will be placed between the first and second bed of carbon media for agent monitoring. DAAMS is used to monitor the stack gas stream for mustard agent. These sampling and analysis instruments are located in the Monitoring House.

D-8a(2): Treatment Unit Design/Construction Details [401 KAR 250 Sections 1, 2 and 3 & 40 CFR 270.23(a)(2), 264.601, and 264.602]

This section describes the criteria for locating the Subpart X units; design and construction of the units; operating conditions; maintenance, monitoring, and inspection; safety features; and closure.

This document contained Export Control/International Traffic in Arms Regulations Information.

- **Criteria Used for Location of Units**

The EDT Facility is located on the BGAD near the storage area for stockpiled chemical munitions to minimize the distance chemical munitions are transported. This location (near the stored munitions) minimizes the risk to the public and workers while being compliant with prohibitions against public transport of chemical weapons. Part B of this Permit Modification Request addresses the adequacy of the EDT Facility location within the BGAD (e.g., geology, surrounding land use, seismic concerns, and meteorology). The EDT Facility location was also chosen because it is adjacent to the BGCAPP Main Plant that is currently under construction so that use of some BGCAPP Main Plant facilities and resources would be possible (e.g., Laboratory, Medical, Maintenance, Emergency Response). It also takes advantage of the previously selected BGCAPP Main Plant location, which is within the interior of the BGAD and away from the general population. Thus, selection of this location also reduces the time needed for the SDC to begin destruction, minimizes the impact to the BGAD environment and surrounding general population, and eliminates the unnecessary duplication and cost of some support facilities.

- **Design and Construction (including containment and ventilation systems)**

The SDC has a heated, armored, outer shell surrounding the inner DC liner, which operates at an elevated temperature. The chamber is constructed of a special heat-resistant stainless steel alloy, which is able to withstand the mechanical stress loads caused by the pressures generated by the deflagration or detonation of the chemical munitions during treatment. The inner and outer chambers are separated from one another by an air space, which serves to decouple detonation stresses from the inner to the outer chamber, thus enhancing the overall safety and reliability of the unit. Placed against the bottom and along the lower sides of the outer chamber are electric resistance heaters that supply heat to the unit. The DC serves as the primary munitions and agent treatment area and also serves as the primary blast, fragment, and containment barrier between the treatment area and the EDT Facility workers within the EEB. The outer chamber includes insulation and reduces the noise impact to workers.

The loading system is composed of a loading conveyer, a munitions lift, and two airlock-type loading chambers equipped with air tight gates. The loading conveyer begins in the munitions loading area and ends at the munitions lift.

During operations, the chambers are mated to a flange that is attached to the loading system. The connection between the upper and lower portions of the chamber uses a rope gasket backed up with triple redundant inflatable seal gaskets to ensure an air tight seal.

Each area in the EDT Facility is designated with one of four ventilation categories (i.e. A, B, C, or D based on the potential for agent contamination during normal munitions and support operations). Descriptions of these categories are as follows:

a. **Category A**: Areas with a high probability of liquid agent contamination (maintained under negative pressure)
b. **Category B**: Areas with a high probability of agent vapor contamination resulting from routine operations (maintained under negative pressure)
c. **Category C**: Areas with a low probability of agent vapor contamination (maintained under negative pressure)
d. **Category D**: Areas expected to never have agent contamination (atmospheric pressure)

This document contained Export Control/International Traffic in Arms Regulations Information.

The EDT Facility has a cascade ventilation and filtration system. Areas in the facility with the highest potential for contamination are maintained at the most negative pressure. Airflow cascades progressively from the areas of least probable contamination (Category C areas) to the areas of higher probable contamination (Category A and B areas). Sealing of walls, floors, ceilings, and penetrations of Category A, B, and C areas prevents migration of liquid or vapor agent to other areas. Airlocks or ancillary spaces separate Category A and B areas from the outside environment. Category upgrading of an area provides temporary control of an increased hazard potential in an area (e.g., the potential presence of liquid agent in a Category B area may result in the area being temporarily upgraded to a Category A area).

Vapor containment for the SDC unit is provided by the outer chamber and a portion of the OTS being contained with a Category B area. The SDC emissions flow through the OTS and are exhausted through the process final filter unit for OTS (i.e., containing pre-filters, HEPAs, and carbon media).

Incrementally greater negative pressures are found when moving from the Category D area towards the Category C, B, and A areas. Thus, the air flow ~~c~~ascades" from the Category D area into the areas with potentially greater contamination. This air flow and the negative pressure gradient serve not only to move any potentially contaminated air through the treatment equipment, but also draws air through the final filter units. The air is drawn into the building, keeping it at a negative pressure with respect to the outside category D air and preventing the flow of any contaminants into the environment.

The figure and table below are provided to show the general simplified concept of the Category A, B, C, and D areas and levels of potential agent contamination and air flow within the EEB.

The cascading air flow protects the workforce, the environment, and the community from the chemical agent hazard, and ensures mustard agent is not released outside of engineering controls.

Cascading air flow begins with outside air entering the outer weather enclosure of the EEB Category D area. Negative pressure begins as the air flow from the Category D building area is drawn into the Category C area, because the cascading air flow design agent is never expected to be present in the Category D area.

Flow is from less negative to more negative pressure areas, with the most negative being at the two final filter units.

Air flow from the DC, Buffer Tank, Thermal Oxidizer, and OTS flows through the process final filter unit. Air flow from the larger Category C area flows through the EEB's final filter unit.

This document contained Export Control/International Traffic in Arms Regulations Information.

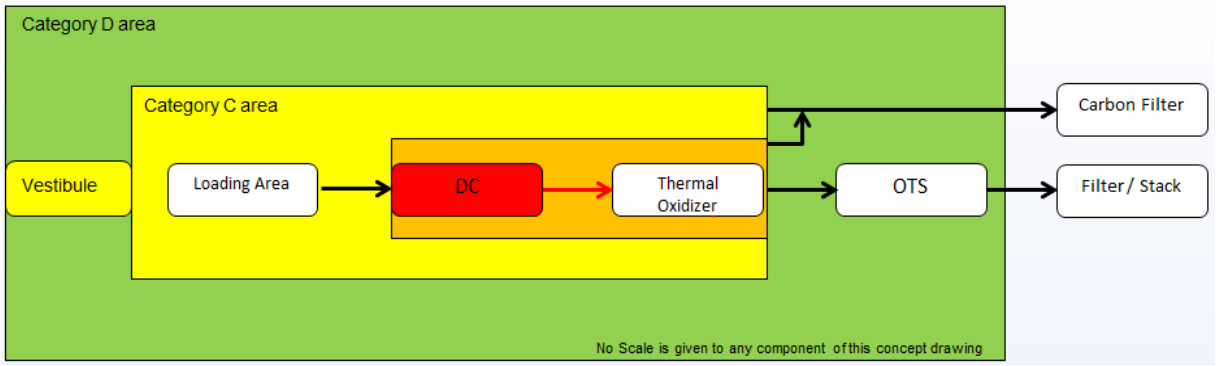

Agent Area Category	Color Code	Purpose	Areas Included	Remarks
A	Red	Primary Containment of liquid and vapor agent	Detonation Chamber (DC) and off-gas piping to the Thermal Oxidizer (THO)	Most negative pressure
B	Orange	Secondary Containment of vapor agent	Around the DC, off-gas piping to the THO, and the THO itself	More negative pressure
C	Yellow	Tertiary Containment providing an area under ventilated engineering controls	Munition Handling and loading areas within the building and around the Secondary Containment areas	Slight negative pressure. Will require both MHE and personnel air lock(s) from the D area
D	Green	No containment. Provides weather protection to EDT equipment and crew	The outer building	No negative pressure on this structure

An MHE/decontamination airlock will be utilized to transfer munitions into the Level C area. EDT Facility personnel may access the Category C area either through the MHE/decontamination airlock and/or through other access doors during normal operations.

The MHE and materials handling airlock requires an air flow of 100 ft/per minute to ensure no back flow to the Category D area. Air monitoring of the airlock is conducted to ensure contaminated materials are not moved from the Category C area into the Category D area. Should air monitoring in the airlock detect agent contamination on materials, equipment, or personnel being moved from the Level C area into the Level D area, decontamination is initiated and confirmed by air monitoring prior to any of these items being moved through the airlock and into the Category D area.

Preliminary vendor engineering drawings that define the design and construction of the SDC equipment include: Process Flow Diagrams – PFDs and Material and Energy Balances (M&EBs) (Appendix D-1), and Piping & Instrumentation Diagrams – P&IDs for the SDC unit (Appendix D-2). These engineering drawings and specifications follow this portion of the RCRA Permit Modification Request (Part D Process Information).

The components of the Miscellaneous Subpart X Unit satisfy the appropriate ASTM manufacturing standard to which the unit will be constructed. The professional engineer (PE) certifications on the final engineering drawings and specifications indicate that a PE has verified that these systems comply with code and regulatory requirements.

This document contained Export Control/International Traffic in Arms Regulations Information.

Projectiles (in pallets or skids) are moved from the Service Magazine to the EEB. The munitions enter through the MHE/decontamination vestibule and are staged at the munitions loading area. The projectiles are removed from the pallets/skids and loaded into feed trays on the loading conveyor, by the use of additional MHE. The munitions-filled tray is transferred to the DC for treatment. The handling process for over-packed projectiles and the DOT bottles are similar to that of the projectiles on pallets/skids. The entire munitions handling process within the building is accomplished under engineering control (i.e., cascade ventilation system). The air exhausted from this area is routed to the building's final filter unit for the EEB and secondary vapor containment. The air exhausted is monitored between the first and second carbon bed for the presence of mustard agent.

The secondary containment system for liquids at the EDT Facility is in the containers storage area (i.e., Service Magazine). The secondary containment volume of the Service Magazine was described in D-1c(3) and it was demonstrated that the volume of the secondary containment significantly exceeded the maximum volume required by RCRA regulations (i.e., 10 percent of the total liquid hazardous waste volume stored). The design of the secondary containment includes a RCRA liner with water stops. The coating used for the secondary containment has been widely used at other chemical agent demilitarization facilities and has been previously tested and shown to be resistant to chemical agents.

- **Operating Conditions**

Table D-3 presents the operating conditions for the SDC (i.e., Subpart X unit) and the following discussion provides additional details. The maximum and average flow-rates, including the waste feed rates are presented in the M&EBs in Appendix D-1. The SDC is a Subpart X unit and was described in D-8a(1). The EDT Facility operates continuously (24 hours a day/7 days per week), with the exception of non-processing periods (e.g., periods for maintenance, inspection, accountability, and shift turnover).

- **Maintenance, Monitoring and Inspection Information**

Part F includes additional maintenance, monitoring, and inspection information.

- **Safety**

The EDT Facility (including the SDC, the building containing the SDC, the OTS, and the Service Magazine) has numerous safety features [e.g., security fencing and control measures, cascade ventilation system, stack monitoring, fire detection, fire suppression, emergency water tank, emergency power supplies (UPS and emergency generator), emergency stops on equipment, a process control system that includes ~~"F~~eed Prohibitive Interlocks" (FPIs) and deflagration/detonation detection and monitoring system]. Major safety features of the EDT Facility are summarized in Table D-4.

The automated and human-machine interface (HMI) control system for the SDC incorporates process logic code that can perform an automated power-down of the unit and ensures an orderly unit shut down until an anomalous condition can be corrected. The SDC is a batch feed process and the end of the destruction process for each batch is identified either by the dynamic pressure sensor and/or the static pressure sensor, aided by a sound sensor, and/or the treatment of projectiles and containers in the DC for a designated period of time. Materials fed to the DC are held for longer than15 minutes at 1,000°F or greater. If an anomalous situation occurs, the SDC operators can stop or prohibit further waste feeds until the situation is resolved. Process code prohibits or prevents feed into the DC. Prohibiting the feed of subsequent batches of hazardous waste into the DC is based upon controls within the facility control system known as ~~"F~~eed Prohibitive Interlocks" or FPIs.

Equipment that processes the energetics material and the agent are one and the same and are located in the building containing the SDC. Design of the SDC allows it to withstand an explosive event up to and including its explosive capacity.

- **Closure**

Part I of this Permit Modification Request provides a proposed schedule and procedure for RCRA closure of these units. Closure of the SDC is planned to consist of partial disassembly, decontamination, reassembly, and placement of the unit into fully-operational status for subsequent use. It is currently planned that the entire EDT Facility will be left in place and the Service Magazine, and other support buildings will not be removed or demolished. However, the Federal Government may make changes to this closure status when the final SDC "end state" is established.

D-8a(3): Effectiveness of Treatment [401 KAR 38:230 Section 1 & 40 CFR 270.23(d)]

The sole function of the SDC is to destroy the stockpile of mustard agent and associated energetics stored by BGCA on BGAD. The ability of the SDC to achieve a Destruction Efficiency of 99.9999% [as required by KRS 224.50-130] or greater was initially proven at the Munster, Germany demilitarization facility. The testing was performed at a site in Münster, Germany, owned by GEKA (Gesellschaft z. Entsorgung chem. Kampfstoffe u. Rüstungs-Altlasten mbH) which was operating an SDC in 2006 to process H, HD, Clark I, Clark II, phosgene and other chemical munitions, and other miscellaneous munitions and explosive components. GEKA is a German Federally chartered company that works under contract for the German Federal Government, destroying all German chemical warfare agents and contaminated military waste. A copy of a report describing this earlier SDC testing is attached as Appendix D-3.

The SDC treatment effectiveness was also demonstrated during full-scale destruction of mustard-filled, M110 155mm projectiles at ANCDF. The performance standard for the EDT Facility in Anniston, AL was destruction and removal efficiency (DRE) of 99.9999 percent for mustard agent. During testing and operation of the Alabama SDC, this DRE was confirmed and demonstrated by testing. However, the destruction of DOT bottles was not previously demonstrated and will need to be demonstrated either during the FAT or during the site acceptance test (SAT) at BGAD prior to any chemical munitions being processed.

Attached Appendix D-4 and Appendix D-5 containing the Test Plan and Test Report for the emission testing performed on the SDC in Anniston, AL. In addition, the multiple pathway human health risk assessment (HHRA) for NEPA Environmental Assessment (EA) of the EDT at BGAD is attached as Appendix D-6. This HHRA indicates that the human health risks associated with operation of the SDC are significantly below normally accepted risk criteria.

D-8a(4): Disposal Units [401 KAR 38:230 Section 1, 34:250 Section 4 & 40 CFR 270.23(a) and 264.603]

Not applicable. The EDT Facility does not include any disposal units.

This document contained Export Control/International Traffic in Arms Regulations Information.

D-8b: Waste Characterization, A Description of the Wastes To Be Treated [401 KAR 38:230 Section 1, and 34:020 Section 4 & 40 CFR 270.23, 264.13 (b), and 264.601(a)(1), (b)(1), (c)(1)]

Part C presents descriptions of the wastes managed at the EDT Facility and the analyses used to characterize these wastes.

The specific volume, composition, and flow of the waste streams managed in the SDC – Miscellaneous Subpart X unit are presented in the Part A.

D-8c: Assessment of the Unit [401 KAR 38:230 Section 1, 34:250 Sections 2–3, and 34:190 Section 3 & 40 CFR 270.23 (a) (2), 264.601, 264.602, and 264.192]

The basis of design for the components of the Miscellaneous Subpart X Treatment Unit, as well as the EDT Facility as a whole, includes the characteristics of the waste managed, and the loads imposed on the foundation. The PE reviews and certifies the unit and ancillary equipment meet the appropriate construction standards to include sufficient structural strength and compatibility with the waste treated; ensuring the systems do not collapse, rupture, or fail. Factors considered in this design review:

(1) Characteristics of the waste managed and design standards to which the unit was constructed

(2) Loads imposed on the foundation

(3) Whether the miscellaneous unit is placed in a saturated zone or flood plain or is located within a seismic fault zone

(4) Frost heave

(5) Soundness of the unit and its ancillary equipment in preventing releases

D-8d: Secondary Containment and Detection of Releases [401 KAR 38:230 Section 1, 34:190 Sections 3 and 4, and 34:250 Section 2

The SDC, the Miscellaneous RCRA Subpart X Unit in this facility, is located indoors, not exposed to precipitation, and does not receive runoff from precipitation. As shown by the design documents, submitted to KDEP in support of this Permit Modification Request, the soils surrounding the SDC and EEB will not contact any releases of wastes. The chamber in which the munitions are treated (i.e., deflagrated and/or detonated) is a double-walled chamber that seals around munitions prior to initiation of the batch treatment process. Therefore, the M110 155mm H-filled projectiles, over-packed projectiles, and DOT bottles are treated in the inner chamber while surrounded by an outer chamber or secondary containment. The SDC OTS provides vapor containment and treatment for the SDC off-gases as required for air pollution control. The air space within the EEB, which houses the SDC is monitored for mustard vapor to ensure engineering controls is maintained (described in this Part). This two-chamber design also provides secondary containment for any liquids that might be present.

This document contained Export Control/International Traffic in Arms Regulations Information.

D-8d(1): No Free Liquids [401 KAR 38:230 Section 1 and 40 CFR 270.23(e)]

The only process liquids expected for the Subpart X EDT Facility are the mustard agent contained in the projectiles, over-packed projectiles, and DOT bottles treated within the SDC unit's DC. As has been previously described, these liquid wastes are treated in a DC design that incorporates liquid and vapor containment. Wastes removed from the OTS air pollution control equipment predominately are dry wastes and if liquid wastes are removed from this equipment during maintenance, these wastes will be containerized and managed with appropriate controls. Wastes without ~~"free~~ liquids" are maintained in a closed environment (within the EEB) or in containers that prevent wind dispersion of waste during conveyance of residue (e.g., ash, dust, paint chips, scrap metals) produced by the treatment process. See section D-1a(1) of Part D of this Permit Modification Request for a discussion of the procedures used to prevent the wind dispersion of wastes and residues (i.e., closed containers – opened only to add or otherwise manage the waste within the containers). The EDT Facility uses the same procedures to manage wastes generated in the SDC – RCRA Miscellaneous Subpart X Treatment Unit.

D-8e: Assessment of the Operation of the Unit [401 KAR 38:230 Section 1, and 34:250 Section 2 & 40 CFR 270.23(b) and 264.601]

This section addresses the EDT Facility from the perspective of protecting public health, the environment, and safety of EDT Facility personnel.

The SDC process is an automated operation designed to protect the safety and health of the operators and public. Under normal conditions (e.g., non-vapor emitting munitions), EDT Facility workers cannot contact the wastes (chemical agents and energetics) because the wastes are within closed containers. Air discharged from the ventilation system at the EDT Facility is monitored for mustard agent on a continuous basis when agent operations are ongoing. The RCRA Subpart AA, BB, or CC requirements are not applicable because tank systems for hazardous waste treatment or storage are not included in the EDT Facility.

In addition, operators who may work with vapor emitting munitions are trained to handle the munitions and wear PPE suitable for the risk associated with the task being performed. In the case of vapor emitting munitions, emergency over-pack activities will take place in an area with the environment controlled by a negative pressure ventilation system and final air stream treatment (using HEPA filters and carbon adsorption) such as within the Service Magazine. Two or more EDT Facility personnel perform manual tasks involving wastes and control room operators observe (via CCTV) all worker entries into areas that are possibly agent-contaminated (e.g., Level C or Level B areas in the EDT Facility).

This document contained Export Control/International Traffic in Arms Regulations Information.

Due to the location of this facility and its process, the potential exposure pathways for the SDC are the result of air emissions (e.g., due to the distance to offsite receptors and the system design and operation prevents exposures except through the air). Franklin Engineering prepared a multi-pathway HHRA for all the EDT options prior to the selection of the SDC and the U.S. Army used this HHRA to demonstrate that any of the EDT options would not significantly increase the public health risk. This HHRA for three of the EDT units and an HHRA addendum for the addition of a fourth type of EDT (i.e., EDS) were included in the NEPA EA (Appendix D-6). This EA was prepared to analyze and evaluate the environmental impacts associated with the federal action for adding any of the EDT units to BGAD. The source for SDC hazardous constituents of concern used in this HHRA was the emission test data from Anniston, AL (Appendix D-5). These documents demonstrate the hazardous constituents of concern released from the EDT Facility stack do not result in any unacceptable risks for workers, the public, or the environment. Air emissions were identified as the primary source of human exposures in this HHRA.

D-8f: Site Assessments [401 KAR 38:230 Section 1 & 40 CFR 270.23(b)]

Figure B-2, Figure B-3, Figure B-4, and Figure B-6 provide information on the surrounding land use, meteorology, flood zones, and geology associated with the EDT Facility in this Permit Modification Request; land use surrounding the BGAD and the EDT Facility is shown in Figure B-2. The location of the EDT Facility is adjacent to the BGCAPP Main Plant and this location is permitted by KDEP under a RCRA RD&D hazardous waste permit based upon this same geologic, meteorology, flood zone, and land use information.

This information was included and presented in the NEPA EA prepared for the addition of EDT unit(s) to the BGAD. This EA indicated there were no significant impacts to the environment, workers, or general public associated with the addition of any of the four EDT units evaluated.

D-8g: Potential Exposure Pathways [401 KAR 38:230 Section 1 & 40 CFR 270.23(c)]

The SDC is not a controlled flame unit and this requirement is not applicable. However, as indicated in the preceding paragraphs, the potential exposure pathways, nature, and magnitude of exposures and design/operational features of the EDT Facility minimize the potential for any exposures to the public, workers, or the environment.

D-8h: Additional Information [401 KAR 38:230, Section 1, & 40 CFR 270.23e]

Appendix D-4, Appendix D-5, and Appendix D-6 compile, describe and evaluate/assess the air emissions from the EDT Facility as described in D-8a(3) and D-8e above. Noise from the facility will not affect surrounding populations due to relatively low noise levels produced by the EDT Facility and the substantial distance between the facility and the nearest resident. Workers' levels of occupational noise exposure from some support equipment in the EDT Facility may exceed Occupational Safety and Health Administration (OSHA) permissible exposures limits during maintenance (e.g., emergency generator), however, the SDC maintenance personnel and other workers with potential noise exposures will be provided suitable hearing protection and medical surveillance for these situations. The design and construction of the DC is expected to minimize noise exposures to SDC workers above 90 dB(A) from the deflagrations and detonations of munitions based upon noise measurements from ANCDF.

This document contained Export Control/International Traffic in Arms Regulations Information.

D-8i: Requirements Specific to OB/OD Units or Geologic Repositories Used for Storage/Treatment of Hazardous Waste [401 KAR 38:230, Section 1 and 40 CFR 270.23]

Not applicable. The SDC does not use open burning/open detonation (OB/OD) or geologic repositories for storage/treatment of any hazardous wastes. The use of the SDC for chemical munitions destruction has the advantage of providing a contained destruction method.

This document contained Export Control/International Traffic in Arms Regulations Information.

Table D-1: Commonly Used Hazardous Waste Containers

CAPACITY (gallons)	DESCRIPTION	UNITED NATIONS (UN) MARKINGS
350	Open head steel/poly intermediate bulk container	UN 31A/31H1/31H2
110	Open head steel drum	UN 1A2
95	Open head polyethylene salvage drum	UN 1H2
85	Open head steel salvage drum	UN 1A2
85	Open head polyethylene salvage drum	UN 1H2
55	Open head steel salvage drum	UN 1A2
55	Closed head steel drum	UN 1A1
55	Closed head polyethylene drum	UN1H1
55	Open head steel drum	UN 1A2
55	Open head polyethylene drum	UN 1H2
30	Closed head steel drum	UN 1A1
30	Closed head polyethylene drum	UN 1H1
30	Open head steel drum	UN 1A2
15	Closed head polyethylene drum	UN 1H1
8	Open head steel pail	UN 1A2
5	Open head polyethylene pail	UN 1H2
5	Closed head polyethylene pail	UN 1H1
1	Open head polyethylene pail	UN 1H2

This document contained Export Control/International Traffic in Arms Regulations Information.

Table D-2: Secondary Containment Volumes for Permitted Unit – Service Magazine

Basis for Secondary Containment Volume:

The secondary containment volume for the Service Magazine was performed to ensure the internal floor area would contain 10 percent of the maximum total liquid volume of the agent contained within the chemical munitions to be stored within the structure.

Based on a maximum storage limit of 500 pounds NEW, the maximum number of M110 155mm mustard-filled projectiles that could be stored is 1,206 individual rounds.

Therefore, the 10 percent Total Agent Volume equates to 121 gallons, as each projectile contains approximately 1 gallon of mustard agent.

Reference document ESM Containment Calculation* (Calculation No. 70-DBC-00-00001), dated 3 July 2013 contains the calculation of the concept design drawing for the Service Magazine. This document includes the Service Magazine Containment calculation showing the area capability to hold liquid amount of 10 percent capacity of the total mustard agent leakage in the area. The results of the calculation are reflected below:

i. Largest container holds = approximately 1 gallon of N003 hazardous waste (mustard agent).

ii. 10 percent Total Agent Volume = 121 gallons

iii. Service Magazine Room Net Volume = 1,024.55 gallons (for the floor area)

In summary, the conceptual design* for the Service Magazine exceeds both the largest container (i.e., M110 155mm projectile = 1 gallon) and 10 percent of the total maximum agent volume (i.e., 121 gallons) stored.

* This calculation is based on the Service Magazine specification documents and concept design sketches. The actual room net volume for the Service Magazine may vary and will be based on the vendor‘s final approved design.

BECHTEL PARSONS BLUE GRASS

A Joint Venture of Bechtel National, Inc. and Parsons Infrastructure & Technology Group Inc.

Calculation Cover Sheet

Project	Job No.	Calc No.	Sheet
Blue Grass Chemical Agent Destruction Pilot Plant	24915	70-DBC-00-00001	1

Subject	Group
ESM Containment Calculations	Structural

Calculation Status Designation	Preliminary	Committed Preliminary	Confirmed	Superseded	Voided
	☐	☒	☐	☐	☐

Computer Program/ Type	SCP	Mainframe	PC	Program No.	Version/Release No.
	☐	☐	☒	Excel	97-2003

Program Validated: ☐ Yes ☐ No Program validation is Not Applicable

Notes/comments

This document includes ESM Containment calculation showing the area capacity to hold liquid amount of 10% capacity of the total mustard agent leakage in the area. The area is shown on Conceptual Containment Area drawing 24915-70-A1-00-00201 and 24915-70-A2-00-00201 in Appendix B; sheet B-2 to B-3.

QUALITY LEVEL: ☐ Q ☒ Non-Q

No.	Reason for Revision	Total No. of Sheets	Last Sheet No.	By	Checked	Approved/ Accepted	Date
				CS	AFR	CCC	
A	Issue for Approval (IFA)	11	4	CS	AFR	CCC	07/03/13

RECORD OF REVISIONS

1

This document contained Export Control/International Traffic in Arms Regulations Information.

BECHTEL PARSONS BLUE GRASS

Calculation Sheet

Project:	BGCAPP
Job Number:	24915
Calc. No.	70-DBC-00-00001
Sheet No.	2of 4
Sheet Rev.	A

Subject: ESM Containment Calculations

By: C. Si Date: 07/03/2013

Table of Contents

Page

1. Objective 3
2. Input 3
3. Assumptions 3
4. References 3
5. Calculation Body 3
6. Summary 4
7. Appendices/Attachments 4

Appendix A: ESM Room Agent Volume Calculations.....A-1 to A-2

Appendix B: Architectural and Structural Drawings .....B-1 to B-5

1

BECHTEL PARSONS BLUE GRASS	Calculation Sheet	Project:	BGCAPP
		Job Number:	24915
		Calc. No.	70-DBC-00-00001
Subject:	ESM Containment Calculations	Sheet No.	3of 4
By: C. Si	Date: 07/03/2013	Sheet Rev.	A

1. Objective

The purpose of this calculation is to design containment capacity to adequately retain liquid amount of 10% capacity of the total mustard agent leakage in the room of ESM.

2. Input

The calculation includes the agent volume capacities of ESM. Agent volume capacity is calculated by net floor area agent accumulation due to sloping floor area times agent height in feet (difference between top threshold elevation and the average room elevation). Trenches and pads are not taken into consideration.

The ESM room is designed to adequately retain liquid amount of 10% of capacity of the total agent in mustard as shown in Appendix-B.

3. Assumptions

Assumed concrete stem wall thickness is 8"

4. References

4.1 List of Pertinent Structural & Architectural Drawings.

24915-70-A1-00-00201 ESM Floor/Roof/Reflected Ceiling Plan, 24915-70-A2-00-00201 ESM Elevations/Sections and 24915-70-A3-00-00201 Details (See Appendix Sheet B-2 to B-4).

24915-000-S0-00-00011 General Typical Concrete Details (See Appendix Sheet B-5).

5. Calculation Body

The calculation Appendix A includes the retention capacity of ESM as shown in Appendix B. The calculation based on net floor area also includes effect of slopping floor.

2" agent height is utilized by taken the difference between threshold elevation and average room elevation.

1

This document contained Export Control/International Traffic in Arms Regulations Information.

BECHTEL PARSONS BLUE GRASS	Calculation Sheet	Project:	BGCAPP
		Job Number:	24915
		Calc. No.	70-DBC-00-00001
Subject:	ESM Containment Calculations	Sheet No.	4of 4
By: C. Si	Date: 07/03/2013	Sheet Rev.	A

6. Summary

The requirements for mustard agent leakage volumes of ESM are met as shown in calculation result in Appendix A.

7. Appendices/Attachments

Appendix A: ESM Room Agent Volume Calculations.....A-1 to A-2

Appendix B: Architectural and Structural Drawings .....B-1 to B-5

1

BECHTEL PARSONS BLUE GRASS	Calculation Sheet	Project:	BGCAPP
		Job Number:	24915
		Calc. No.	70-DBC-00-00001
Subject:	ESM Containment Calculations	Sheet No.	A-1 of A-2
By:	C. Si Date: 07/03/2013	Sheet Rev.	A

Appendix A: ESM Room Agent Volume Calculations

BECHTEL PARSONS BLUE GRASS

Calculation Sheet

Project:	BGCAPP
Job Number:	24915
Calc. No.	70-DBC-00-00001
Sheet No.	A-2 of A-2
Sheet Rev.	A

Subject: ESM Containment Calculations

By: C. Si Date: 07/03/2013

ROOM : ESM

Room size : L = 30 (ft) , B = 30 (ft)
Stem Wall Thickness : 8 (in)

Gross Area = 30 (ft) x 30 (ft) = 900 (sq. ft)

Room Net Size : L1 = (30') – [2 x (8")] = 28'-8" = 28.67 (ft)

B1 = (30') – [2 x (8")] = 28'-8" = 28.67 (ft)

Room Net Area: Anet = L1 x B1 = 28.67 (ft) x 28.67 (ft) = 821.78 (sq.ft)

Floor Ridge Elevation : HP = 901'-5"

Floor Low Point Elevation: LP = 901'-3"

Average Floor Elevation = (HP + LP)/2 = [(901'-5") + (901'-3")/2 = 901'-4"

Top Threshold Elevation = (901'-6") < Curb Elevation = (904'-0")

Average Agent Height = Top Threshold Elevation – Average Room Elevation = [(901'-6") - (901'-4")] = 2"

Room Net Volume : Vnet Room = Anet x Average Agent Height = 821.78 (sq.ft) x 2/12 (ft) = 136.96 (cu.ft)

= (136.963cu. Ft) *(7.48052 Gallon/cu. Ft) = 1024.55 Gallon

>> 10% Total Agent Volume = 121 Gallon

1

This document contained Export Control/International Traffic in Arms Regulations Information.

BECHTEL PARSONS BLUE GRASS

Calculation Sheet

Project:	BGCAPP
Job Number:	24915
Calc. No.	70-DBC-00-00001
Sheet No.	B-1 of B-5
Sheet Rev.	A

Subject: ESM Containment Calculations

By: C. Si Date: 07/03/2013

Appendix B: Architectural and Structural Drawings

1

BECHTEL PARSONS BLUE GRASS

Calculation Sheet

Project:	BGCAPP
Job Number:	24915
Calc. No.	70-DBC-00-00001
Sheet No.	B-2 of B-5
Sheet Rev.	A

Subject: ESM Containment Calculations

By: C. Si Date: 07/03/2013

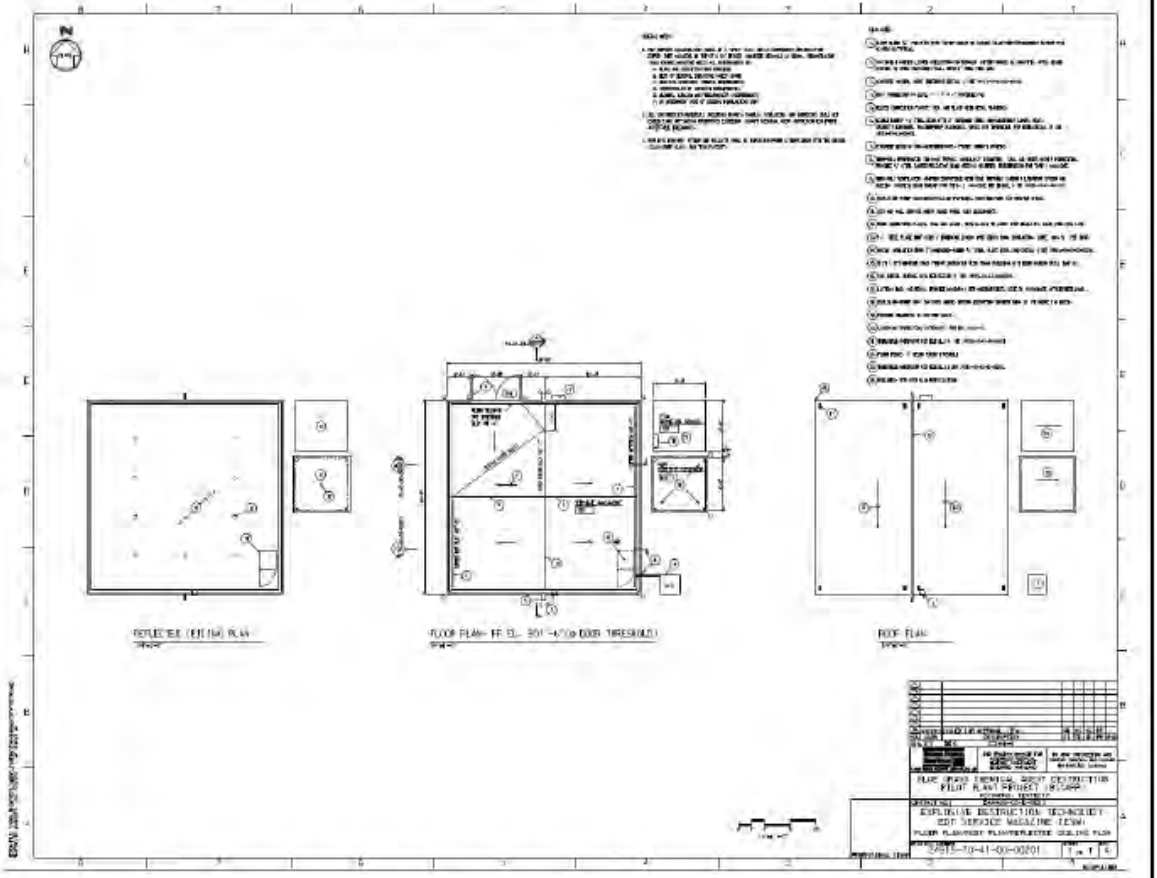

1

BECHTEL PARSONS BLUE GRASS

Calculation Sheet

Project:	BGCAPP
Job Number:	24915
Calc. No.	70-DBC-00-00001
Sheet No.	B-3 of B-5
Sheet Rev.	A

Subject: ESM Containment Calculations

By: C. Si Date: 07/03/2013

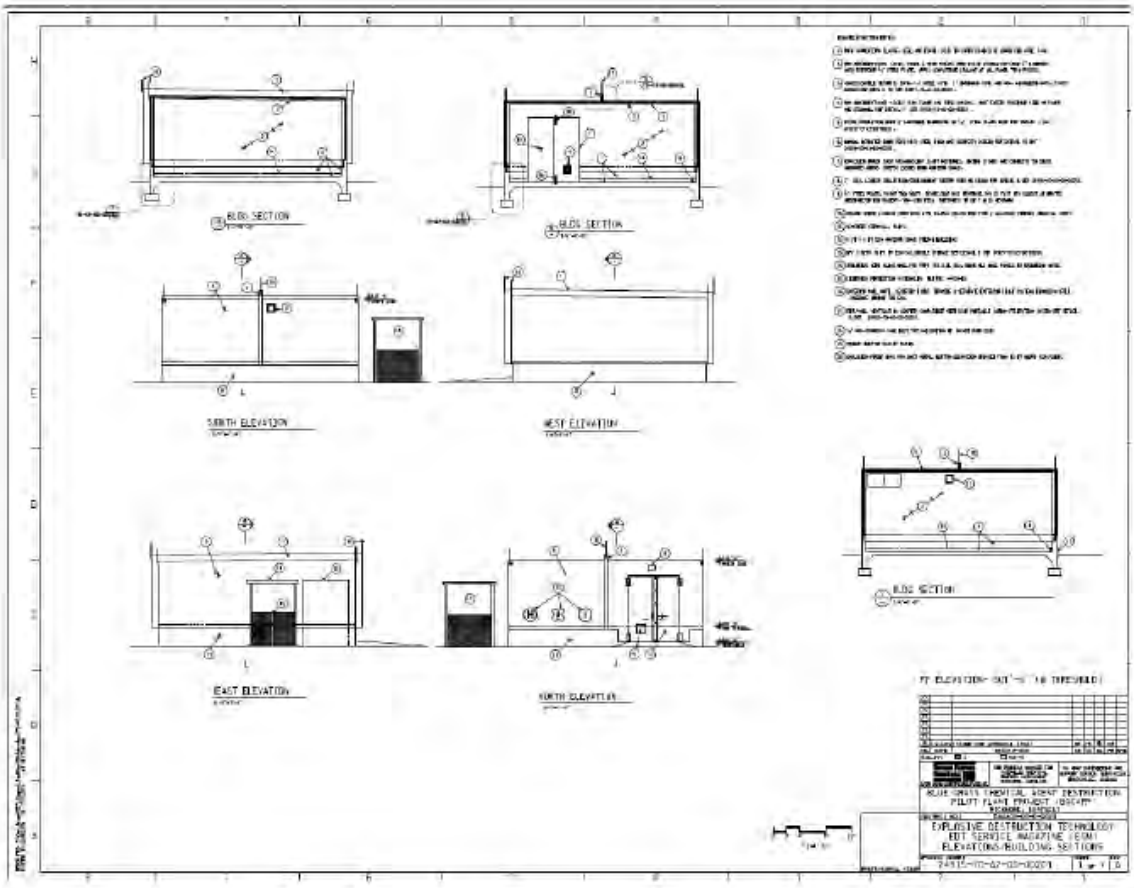

1

BECHTEL PARSONS BLUE GRASS

Calculation Sheet

Project:	BGCAPP
Job Number:	24915
Calc. No.	70-DBC-00-00001
Sheet No.	B-4 of B-5
Sheet Rev.	A

Subject: ESM Containment Calculations

By: C. Si Date: 07/03/2013

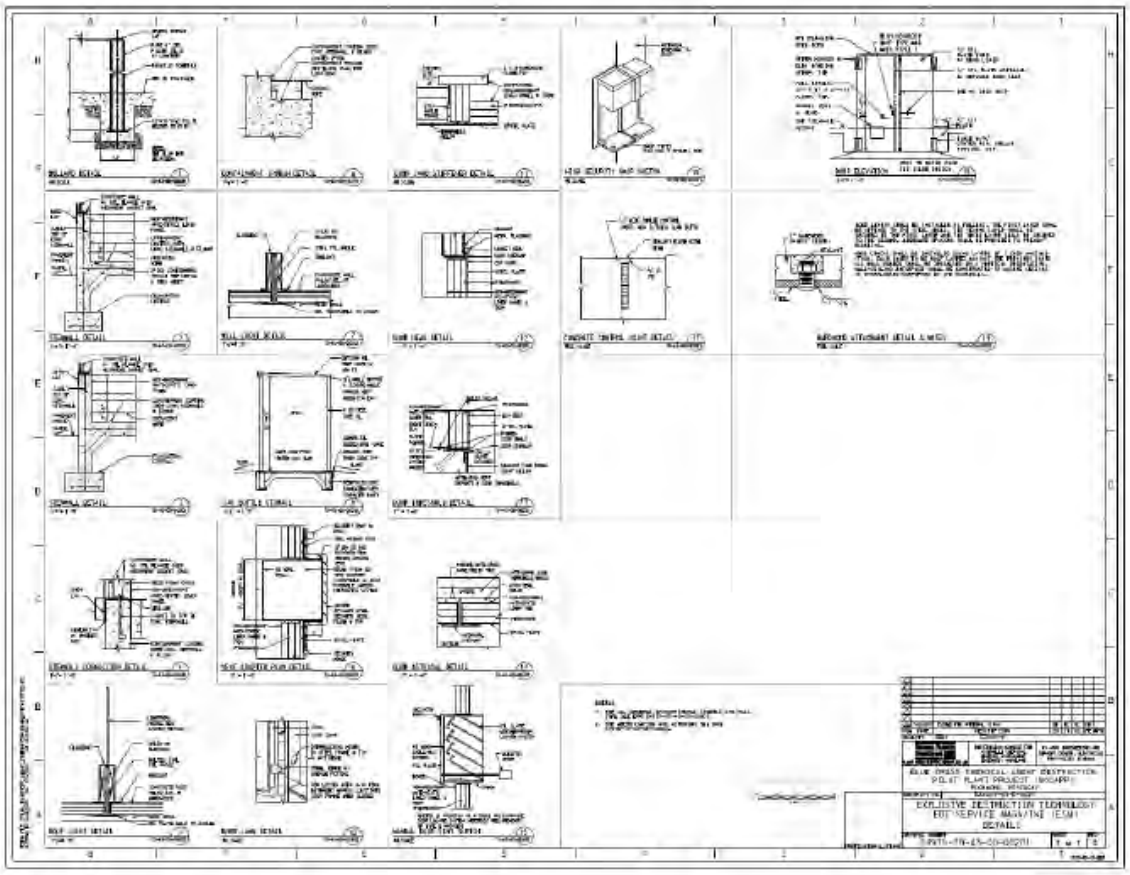

1

This document contained Export Control/International Traffic in Arms Regulations Information.

BECHTEL PARSONS BLUE GRASS

Calculation Sheet

Project:	BGCAPP
Job Number:	24915
Calc. No.	70-DBC-00-00001
Sheet No.	B-5 of B-5
Sheet Rev.	A

Subject: ESM Containment Calculations

By: C. Si Date: 07/03/2013

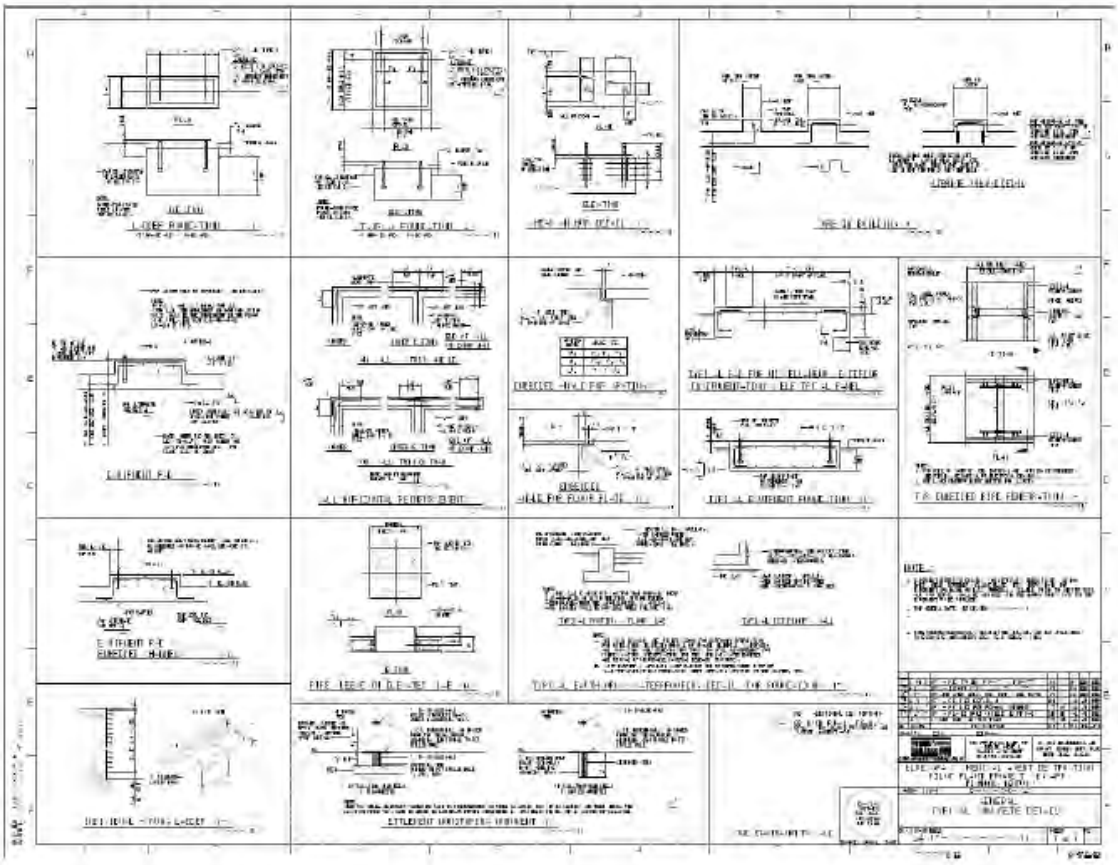

1

This document contained Export Control/International Traffic in Arms Regulations Information.

Table D-3: Operating Conditions for Subpart X Unit – SDC

The Limiting Conditions of Operation (LCOs) for the SDC, Off-Gas Treatment System (OTS), air monitoring systems, security, and EDT Facility operations (e.g., waste munitions receipt and movements) will dictate the operating conditions under which the SDC and the EDT Facility will operate. These LCOs must be met to ensure compliance with Environmental, Security, Surety, Safety, Health, Treaty, and Quality requirements before specific operations are performed. LCOs are verified and signed off on a daily basis prior to commencing operations and are documented and retained as a compliance record. If the LCO is not met, the activity is not performed unless an approved mitigation measure is in place. The approved version of the LCOs will be maintained in the EDT control room. The operating conditions for the EDT Facility are described in the table below.

System	Operating Condition	Additional Information
Detonation Chamber	Is operational and is maintained at or above its minimal operational temperature	Temperature above minimum operating temperature
Heat Trace (Detonation Chamber to thermal Oxidizer)	Is operational and is maintained at or above its minimal operational temperature	This is the heat trace between DC exhaust piping and the Thermal Oxidizer
Thermal Oxidizer	Is operational and is maintained at or above its minimal operational temperature	Temperature above minimum operating temperature
Final Filter Units	ID fan is operating and DP across the filter beds are below the maximum acceptable parameters	Ensure airflow through the OTS, SDC, and building are adequate
Air Monitoring Equipment	MINICAMS® and DAAMS required for processing are operational	Without operational MINICAMS® and DAAMS processing cannot proceed
Air Monitoring Testing	Challenges of the required operational MINICAMS® are current	Passing results on the Challenge test are required
LCOs	Have been verified, reviewed, and approved	If LCOs are not met, the LCO activity cannot be performed without an approved mitigation or waiver
Feed Prohibited Interlocks (FPIs)	Have been verified, reviewed, and approved	FPIs will be tested as written in the FPI procedure
Emergency Generator	The emergency generator has been tested	Emergency generator testing will be performed in accordance with the operational procedure
Service Magazine	Stored projectiles or other H-filled are present that can be processed, forklift is operational and air monitoring is functioning.	Previous inspection did not reveal any environmental deficiencies requiring correction.

This document contained Export Control/International Traffic in Arms Regulations Information.

System	Operating Condition	Additional Information
Operational Staffing	Required staffing are physically present onsite to perform specific operations	Obtain personnel required by LCOs for operations
Security System	Security systems are operational	Approved mitigation measure may be used if a primary system is not available

1

This document contained Export Control/International Traffic in Arms Regulations Information.

Table D-4: Subpart X Safety Features

The following Subpart X Features table shows an example of the general safety features for operation of the EDT Facility and equipment systems.

System	Safety Feature	Additional Information
Feed Conveyor Interlock	To prevent multiple ammunition trays to be fed to and dropped in the chamber	N/A
Lift Fall Arrest System	The Lift System for projectiles and other items containing mustard agent has a Fall Arrest System installed on it	This prevents the Lift from free falling in the event of a power failure
Air Monitoring Equipment	Used to detect mustard agent	N/A
Emergency Water Tank	Protects key components of the OTS if an over temperature event occurs	Automatically initiates utilizing compressed gases if over-temperature occurs
Fire Detection System (FDS)	A FDS is installed in critical areas of the EDT Facility	Communicates to BGAD Fire Department
Fire Protection System (FPS)	A FPS is installed to suppress any fire event that may occur	The FPS also includes alarms and is tied into the FDS
FPIs	Are incorporated in the equipment and software to support environmental compliance requirements	Feed of next waste batch is prohibited unless feed conditions are met
Emergency Generator	The emergency generator provides backup power in the event of primary power loss	Systems critical to operations are provided power by the emergency generator Note: The DC retains a temperature greater than 1,000ºF for greater than one hour, ensuring treatment of any dropped wastes.
Control System	Dual SDC and OTS operational consoles are located in the control room	One primary and the other serves as a backup console
CCTV Cameras	CCTV cameras are installed to monitor key plant operations within the EDT Facility and within the EEB and OTS equipment areas	Compensating measures may be used (e.g., security or EDT Facility personnel can be posted in lieu of some cameras)
Operational Safety Staffing	Safety staff personnel are assigned to the operational crew	Safety personnel monitor ongoing operations to ensure safe operations
Access Restrictions	Access to the EDT Facility is controlled and restricted to operational personnel and authorized, cleared visitors	Prevents unauthorized entry by intruders, livestock, etc.

(SENSITIVE INFORMATION REMOVED)

Figure D-4 – EDT Facility Layout

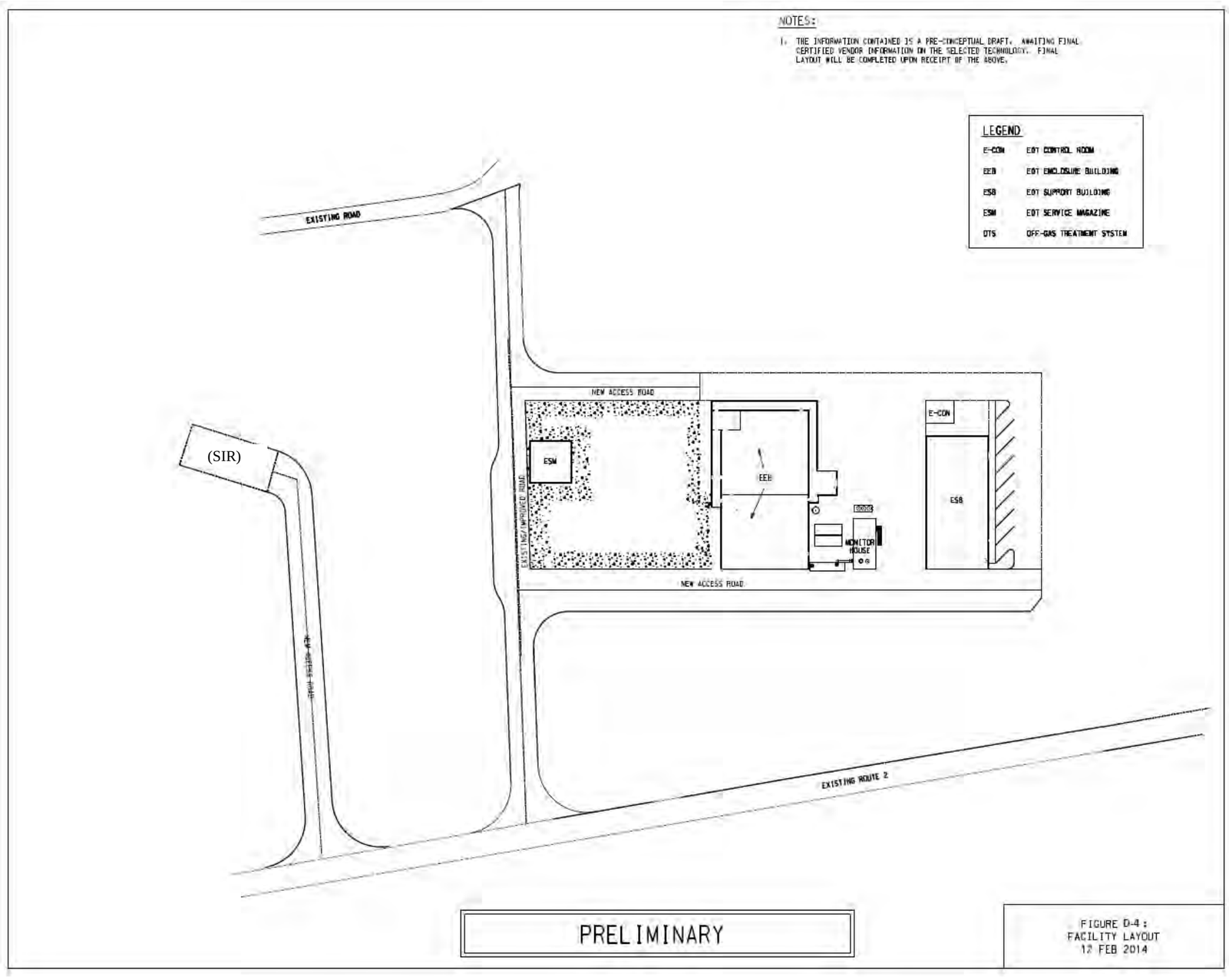

Figure D-5 – EEB Layout

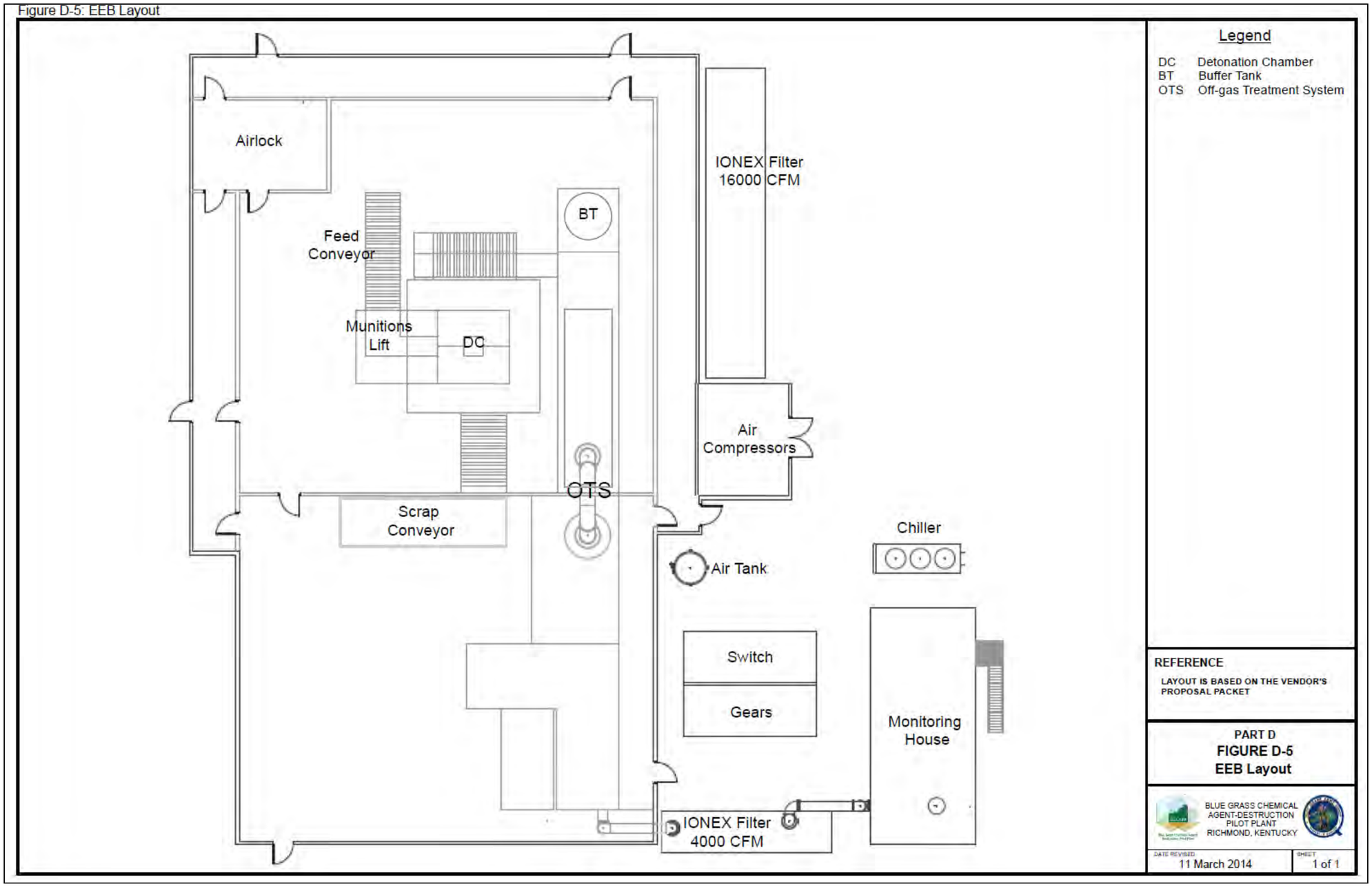

This document contained Export Control/International Traffic in Arms Regulations Information.

Figure D-6 – EDT Process Equipment Layout

Figure D-6: EDT Process Equipment

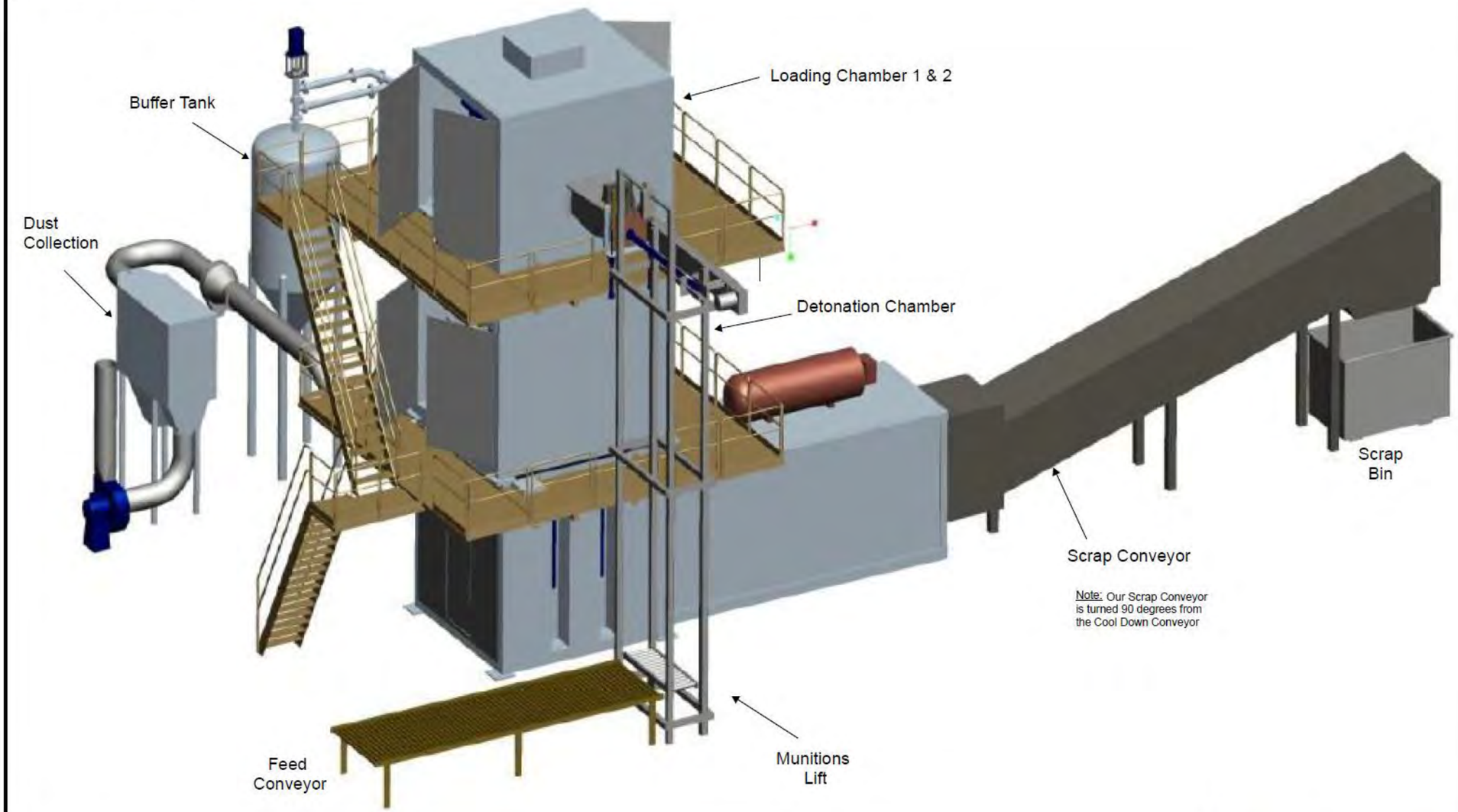

REFERENCE LAYOUT IS BASED ON THE VENDOR'S PROPOSAL PACKET	PART D **FIGURE D-6** **EDT Facility Process Equipment Layout**	BLUE GRASS CHEMICAL AGENT-DESTRUCTION PILOT PLANT RICHMOND, KENTUCKY DATE REVISED 11 March 2014 SHEET 1 of 1

This document contained Export Control/International Traffic in Arms Regulations Information.

1

Figure D-7 – OTS Process Equipment Layout

Figure D-7: OTS Process Equipment Layout

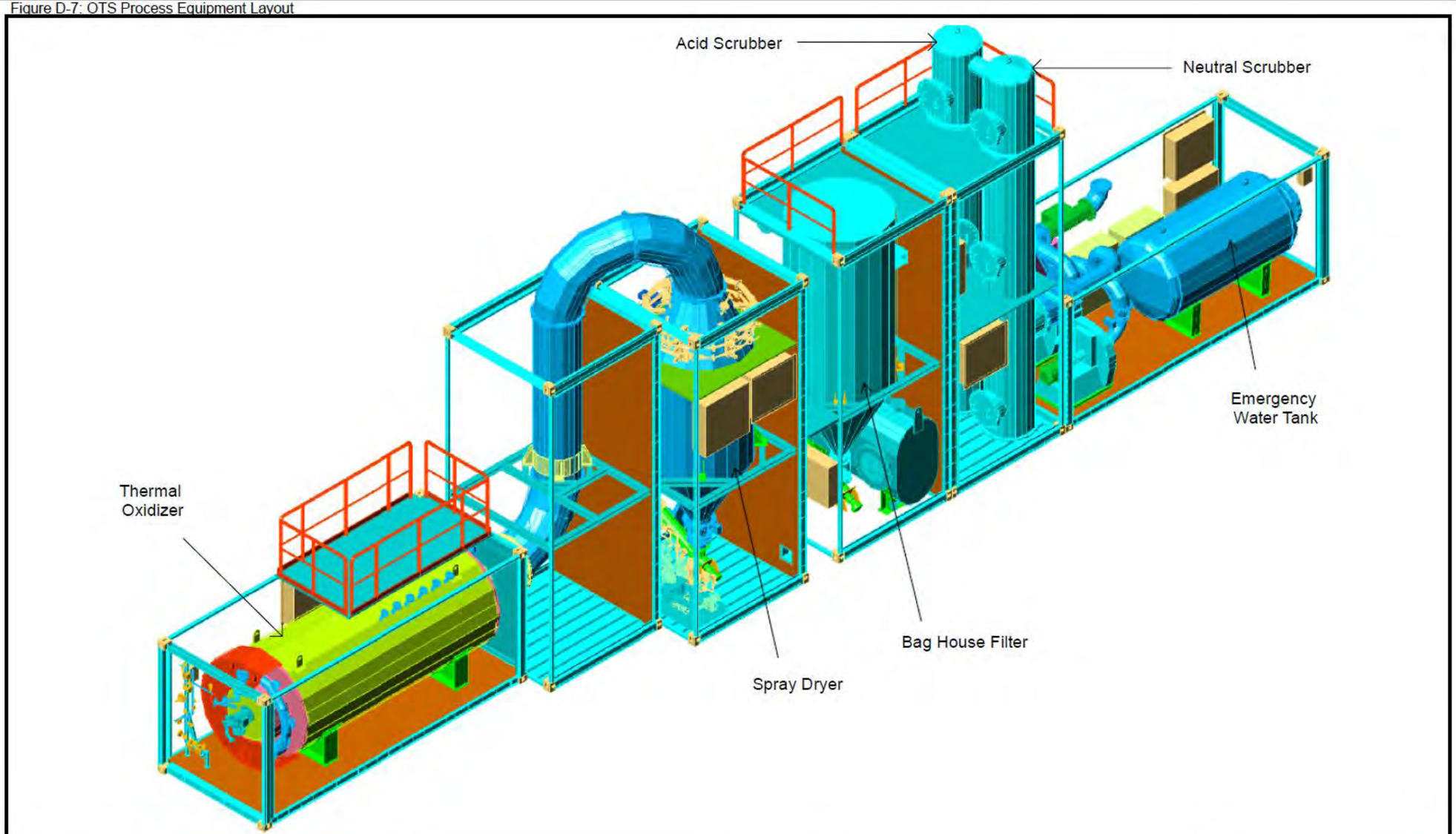

REFERENCE LAYOUT IS BASED ON THE VENDOR'S PROPOSAL PACKET	PART D FIGURE D-7 OTS Process Equipment Layout	BLUE GRASS CHEMICAL AGENT-DESTRUCTION PILOT PLANT RICHMOND, KENTUCKY DATE REVISED 11 March 2014 SHEET 1 of 1

2

This document contained Export Control/International Traffic in Arms Regulations Information.

1

Figure D-8 – OTS Process Equipment Layout Reverse Angle

Figure D-8: OTS Process Equipment Layout Reverse Angle

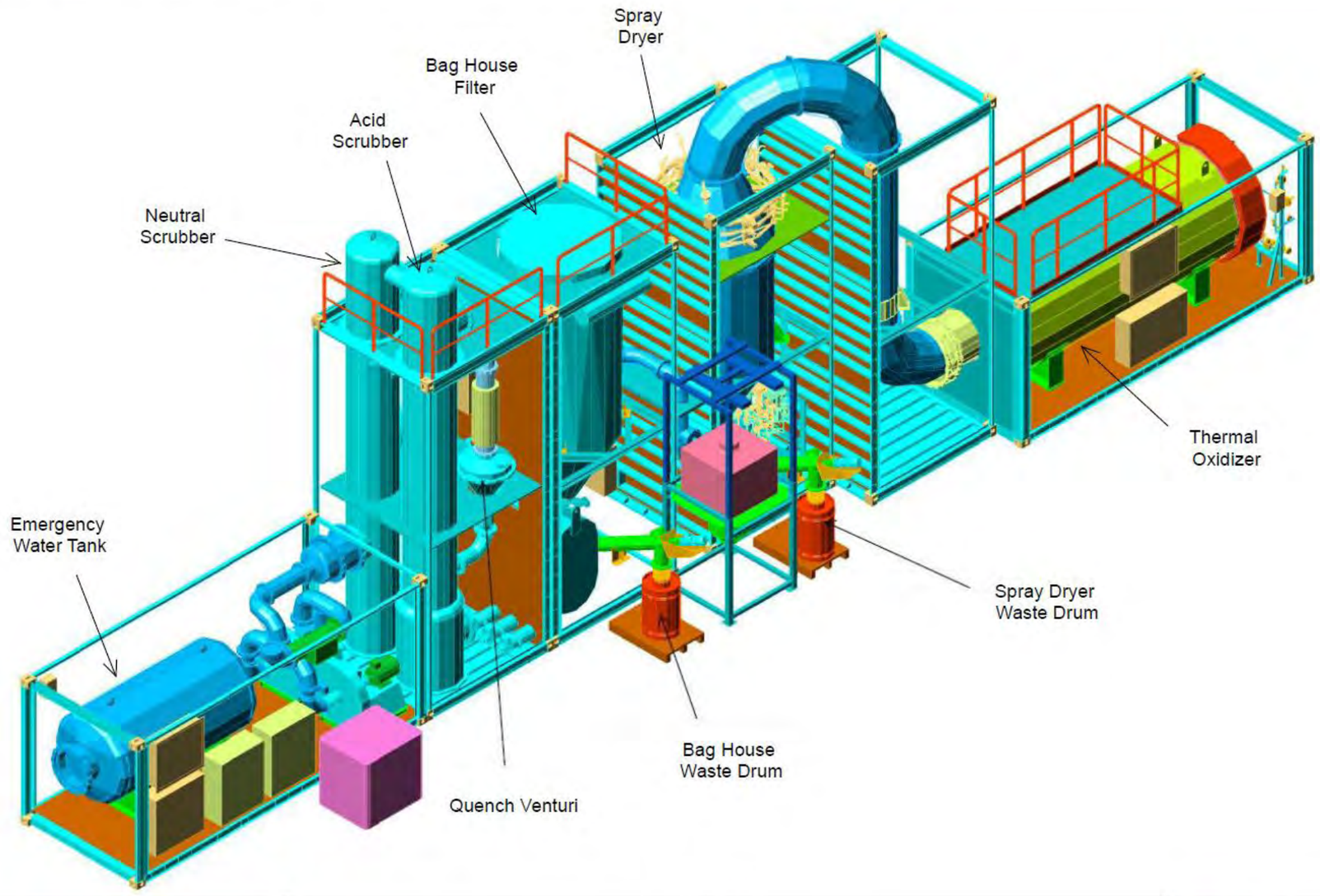

REFERENCE	PART D **FIGURE D-8** **OTS Process Equipment Layout, Reverse Angle**	BLUE GRASS CHEMICAL AGENT-DESTRUCTION PILOT PLANT RICHMOND, KENTUCKY
LAYOUT IS BASED ON THE VENDOR'S PROPOSAL PACKET		DATE REVISED: 11 March 2014 / SHEET: 1 of 1

2

This document contained Export Control/International Traffic in Arms Regulations Information.

Appendix D-1: **Process Flow Diagrams (PFDs) and Material and Energy Balances**

Vendor PFDs currently are ~~"p~~reliminary" and will not be updated until design progresses. When updated, the revised PFDs will be submitted to KDEP.

This document was reviewed by RWR and no OPSEC-sensitive information was discovered.

This document contained Export Control/
International Traffic Arms Regulations Information.

24915-070-V11-M000-00032

UXB | BECHTEL | DYNASAFE

Material and Energy Balance- without overpack

SDC and OGT

EXPLOSIVE DESTRUCTION TECHNOLOGY (EDT) SYSTEM

BLUE GRASS CHEMICAL AGENT DESTRUCTION PILOT PLANT PROJECT (BGCAPP)

RICHMOND, KENTUCKY 40475

SUBCONTRACTOR NO. 24915-070-HC1-M000-00001

CONTRACTOR: Bechtel National, Inc. SUBCONTRACTOR: UXB International, Inc.

Summary

Text

Document that describes Material and Energy Balance based on M110 155-mm H filled projectiles at Peak and Normal processing rates.

Document no:	Revision:	Classification:		Page:
073308	B	Project confidential		1 of 5
Document title:	Project no:	Issued by:	Issued date	Approved by:
Material and Energy Balance	406		2014-02-17	
	Approved for:			

Rev.	Date	Description	DRN	CHK	APP
A	21.01.2014	First issue	TS	Bnp	Bnp
B	18.02.2014	After Bechtel comments	AB	RS	

This document is property of Dynasafe Demil Systems AB and must not be reproduced, dis-closed to any third party or used in any unauthorized manner without written consent.
© 2014 Dynasafe Demil Systems AB

Page: 1

This document contained Export Control/International Traffic in Arms Regulations Information.

SI Units

1 Case: 4.8ea. 155mm Projectiles/hr

SDC Streams

Stream No.		1					2	3	4	5	6	7	8	9		10	11	12		13	14	15	16	17
		TOTAL	SUBCOMPOSITION															SCRAP FOR DISPOSAL						
Medium		MUNITIONS	EXPLOSIVES	AGENT (H)	METAL (munition bodies)	PACKING (Tray)	AIR TO AIR HEATER	COMBUSTION AIR	OFFGAS FROM DC TO BT	OFFGAS FROM BT TO OGT	DUST FROM BUFFERTANK	PROCESS VENTILATION 1 FROM SCRAP CABINET	PROCESS VENTILATION AFTER FILTER	PROCESS VENTILATION AFTER FAN		DUST FROM CYCLONE	DUST FROM FILTER	METAL (projectile bodies)	DUST	PROCESS VENTILATION FROM SCRAP CABINET	FLUSHING AIR OF LC1 & LC2 AND PURGING OF SENSORS	PROCESS VENTILATION FROM LOADING SYSTEM	PROCESS VENTILATION 2 FROM SCRAP CABINET	PROCESS VENTILATION 2 FROM BUFFER TANK
Amount	kg/h					3.60					0.58					0.07	0.07		1.60					
	lbs/h					7.94					1.27					0.15	0.15		3.53					
	gal/min																							
	Nm³/h						300.00	300.00	353.66	353.66		3,500.00	8,000.00	8,000.00						250.00	50.00	250.00	3,500.00	500.00
	Scfm						186.63	186.63	220.01	220.01		2,177.35	4,976.80	4,976.80						155.52	31.10	155.52	2,177.35	311.05
Pressure	mbar						6,000.00	3,000.00	variable	variable			-40.00	0.00										
	psi						87.00	43.50	variable	variable			-0.58	0.00										
Temperature	°C					20.00	20.00	400.00	550.00	300.00	80.00	30.00	30.00	30.00		20.00	20.00		30-300	30.00	20.00	30.00	30.00	30.00
	°F					68.00	68.00	752.00	1,022.00	572.00	176.00	86.00	86.00	86.00		68.00	68.00		86-572	86.00	68.00	86.00	86.00	86.00

Stream No.		50	51	52	53	54	55	56	56A	57	58	70	71	71A	72	72A	72B	73A	73B	75	76	77A	77B	77C
Medium		OFF GAS FROM SDC	FLUE GAS FROM THERMEL OXIDIZER	FLUE GAS FROM SPRAY DRYER	FLUE GAS FROM BAG HOUSE FILTER	FLUE GAS FROM QUENCH	FLUE GAS FROM ACID SCRUBBER	FLUE GAS FROM NEUTRAL SCRUBBER	FLUE GAS FROM HEAT EXCHANGER	FLUE GAS FROM INDUCED DRAFT FAN	FLUE GAS TO STACK	NATURAL GAS	AIR	AIR	POTABLE WATER	CONDENSATE WATER TO ACID SCRUBBER	CONSENSATE WATER TO NEUTRAL SCRUBBER	NaOH (25%) TO BW TANK	NaOH (25%) TO NEUTRAL SCRUBBER	ADDITIVE	COMPRESSED AIR FROM HEADER	COMPRESSED AIR TO SPRAY DRYER	COMPRESSED AIR TO ADDITIVE DOSING	COMPRESSED AIR TO BAG HOUSE FILT
Amount	kg/h														152.00	248.00	416.00	8.31	39.58	30.70				
	lbs/h														335.10	546.75	917.12	18.32	87.26	67.68				
	gal/min														0.67	1.09	1.83	0.04	0.174					
	Nm³/h	353.66	1,285.99	2,448.72	2,448.30	2,375.10	2,369.99	2,369.99	1,821.80	1,821.80	1,821.80	56.00	592.00	176.00							300.00	150.00	20.00	30.00
	Scfm	220.01	800.01	1,523.35	1,519.98	1,477.55	1,474.37	1,474.37	1,133.34	1,133.34	1,133.34	34.84	368.28	109.49							186.63	155.52	12.44	18.66
Pressure	mbar	variable	-10.00	-35.00	-55.00	-80.00	-85.00	-90.00		50.00	50.00	30.00	30.00											
	psi	variable	-0.15	-0.51	-0.80	-1.16	-1.23	-1.31		0.73	0.73	0.44	0.44											
Temperature	°C	300.00	1,130.00	180.00	180.00	78.00	78.00	75.00	80.00	80.00	80.00	20.00	20.00	20.00	20.00	40.00	40.00	20.00	20.00	20.00	20.00	20.00	20.00	20.00
	°F	572.00	2,066.00	356.00	356.00	172.00	172.00	167.00	176.00	176.00	176.00	68.00	68.00	68.00	68.00	104.00	104.00	68.00	68.00	68.00	68.00	68.00	68.00	68.00
													467.68	139.04							237.00	197.50	15.80	23.70
													124.32	36.96							63.00	52.50	4.20	6.30

2

3

This document contained Export Control/ International Traffic Arms Regulations Information.

This document contained Export Control/International Traffic in Arms Regulations Information.

OGT Streams

Stream No.		80	81	82	83	84	85	85A	86	88	89	90	91
Medium		PROCESS WATER TO SPRAY DRYER	EMERGENCY- WATER TO DRYER / QUENCH	CIRCULATION WATER QUENCH	CIRCULATION WATER ACID SCRUBBER	CIRCULATION WATER NEUTRAL SCRUBBER	BLEED TO PW TANK	ACID SCRUBBER BLEED TO BW TANK	NEUTRAL SCRUBBER BLEED TO BW TANK	CONDENSATE TO CO TANK	WATER TO SCRUBBER	RESIDUES TO DEPOSIT from SPD	RESIDUES TO DEPOSIT From BHF
Amount	kg/h	631.00	ONLY EMERGENCY	8,000.00	10,000.00	10,000.00	98.00	VARIABLE	400.00	430.00	664.00	0.19	43.00
	lbs/h	1,388.20		17,600.00	22,000.00	22,000.00	215.60	VARIABLE	880.00	946.00	1,460.80	0.42	94.60
	gal/min	2.78		35.22	44.03	44.03	0.43		1.76	1.89	2.92		
	Nm^3/h												
	Scfm												
Pressure	mbar												
	psi												
Temperature	°C	40.00		75.00	75.00	75.00	75.00	80.00	80.00	60.00	40.00	60.00	60.00
	°F	104.00		167.00	167.00	167.00	167.00	176.00	176.00	140.00	104.00	140.00	140.00

Note: Additive is sodium bicarbonate powder

This document contained Export Control/ International Traffic Arms Regulations Information.

This document contained Export Control/International Traffic in Arms Regulations Information.

US Units

Case: 4,8ea. 155mm Projectiles/hr

SDC Streams

Stream No.		1					2	3	4	5	6	7	8		9	10	11	12		13	14	15	16	17
		TOTAL SUBCOMPOSITION																SCRAP FOR DISPOSAL						
Medium		MUNITIONS	EXPLOSIVES	AGENT (H)	METAL (munition bodies)	PACKING (Tray)	AIR TO AIR HEATER	COMBUSTION AIR	OFFGAS FROM DC TO BT	OFFGAS FROM BT TO OGT	DUST FROM BUFFERTANK	PROCESS VENTILATION 1 FROM SCRAP CABINET	PROCESS VENTILATION AFTER FILTER		PROCESS VENTILATION AFTER FAN	DUST FROM CYCLONE	DUST FROM FILTER	METAL (projectile bodies)	DUST	PROCESS VENTILATION FROM SCRAP CABINET	FLUSHING AIR OF LC1 & LC2 AND PURGING OF SENSORS	PROCESS VENTILATION FROM LOADING SYSTEM	PROCESS VENTILATION 2 FROM SCRAP CABINET	PROCESS VENTILATION 2 FROM BUFFER TANK
Amount	kg/h					3.60					0.58					0.07	0.07	189.46	1.60					
	lbs/h					7.94					1.27					0.15	0.15	417.69	3.53					
	gal/min					0.00	0.00	0.00	0.00	0.00	0.00	0.00	0.00		0.00	0.00	0.00	0.00	0.00	0.00	0.00	0.00	0.00	0.00
	Nm^3/h						300.00	300.00	353.66	353.66		3,500.00	8,000.00		8,000.00					250.00	500.00	2,500.00	3,500.00	500.00
	Scfm						186.63	186.63	220.01	220.01		2,177.35	4,976.80		4,976.80					155.52	311.10	155.52	2,177.35	311.05
Pressure	mbar						6,000.00	3,000.00	variable	variable			-40.00											
	psi						87.00	43.50	variable	variable			-0.58											
Temperature	°C					20.00	20.00	400.00	550.00	300.00	80.00	30.00	30.00		30.00	20.00	20.00	30-300	30-300	30.00	20.00	30.00	30.00	30.00
	°F					68.00	68.00	752.00	1,022.00	572.00	176.00	86.00	86.00		86.00	68.00	68.00	86-572	86-572	86.00	68.00	86.00	86.00	86.00

Stream No.		30	31	32	33	34	35	36	36A	37	38	70	71	71A	72	72A	72B	73A	73B	75	76	77A	77B	77C
Medium		OFF GAS FROM SDC	FLUE GAS FROM THERMEL OXIDIZER	FLUE GAS FROM SPRAY DRYER	FLUE GAS FROM BAG HOUSE FILTER	FLUE GAS FROM QUENCH	FLUE GAS FROM ACID SCRUBBER	FLUE GAS FROM NEUTRAL SCRUBBER	FLUE GAS FROM HEAT EXCHANGER	FLUE GAS FROM INDUCED DRAFT FAN	FLUE GAS TO STACK	NATURAL GAS	AIR	AIR	POTABLE WATER	CONDENSATE WATER TO ACID SCRUBBER	CONSENSATE WATER TO NEUTRAL SCRUBBER	NaOH (25%) TO BW TANK	NaOH (25%) TO NEUTRAL SCRUBBER	ADDITIVE	COMPRESSED AIR FROM HEADER	COMPRESSED AIR TO SPRAY DRYER	COMPRESSED AIR TO ADDITIVE DOSING	COMPRESSED AIR TO BAG HOUSE FILT
Amount	kg/h														152.00	248.00	416.00	8.31	39.58	30.70				
	lbs/h															546.75	917.12	18.32	87.26	67.68				
	gal/min														0.67	1.09	1.83	0.04	0.174	0.00	0.00	0.00	0.00	0.00
	Nm^3/h	353.66	1,285.99	2,448.72	2,443.30	2,375.10	2,369.99	2,369.99	1,821.80	1,821.80	1,821.80	56.00	592.00	176.00	176.00						300.00	250.00	20.00	30.00
	Scfm	220.01	800.01	1,523.35	1,519.98	1,477.55	1,474.37	1,474.37	1,133.34	1,133.34	1,133.34	34.84	368.28	109.49	109.49						186.63	155.52	12.44	18.66
Pressure	mbar	variable	-10.00	-35.00	-55.00	-80.00	-85.00	-90.00		50.00	50.00	30.00	30.00											
	psi	variable	-0.15	-0.51	-0.80	-1.16	-1.23	-1.31		0.73	0.73	0.44	0.44											
Temperature	°C	300.00	1,130.00	180.00	180.00	78.00	78.00	75.00	80.00	80.00	80.00	20.00	20.00	20.00	20.00	40.00	40.00	20.00	20.00	20.00	20.00	20.00	20.00	20.00
	°F	572.00	2,066.00	356.00	356.00	172.00	172.00	167.00	176.00	176.00	176.00	68.00	68.00	68.00	68.00	104.00	104.00	68.00	68.00	68.00	68.00	68.00	68.00	68.00
													290.94	86.50	86.50						147.14	122.86	9.83	14.74
													77.34	22.99	22.99						39.19	32.66	2.61	3.92

This document contained Export Control/ International Traffic Arms Regulations Information.

This document contained Export Control/International Traffic in Arms Regulations Information.

OGT Streams

Stream No.		80	81	82	83	84	85	85A	86	88	89	90	91
Medium		PROCESS WATER TO SPRAY DRYER	EMERGENCY WATER TO DRYER / QUENCH	CIRCULATION WATER QUENCH	CIRCULATION WATER ACID SCRUBBER	CIRCULATION WATER NEUTRAL SCRUBBER	BLEED TO PW TANK	ACID SCRUBBER BLEED TO BW TANK	NEUTRAL SCRUBBER BLEED TO BW TANK	CONDENSATE TO COTANK	WATER TO SCRUBBER	RESIDUES TO DEPOSIT from SPD	RESIDUES TO DEPOSIT From RHF
Amount	kg/h	631.00	ONLY EMERGENCY	8,000.00	10,000.00	10,000.00	98.00	VARIABLE	400.00	430.00	664.00	0.19	43.00
	lbs/h	1,388.20		17,600.00	22,000.00	22,000.00	215.60	VARIABLE	880.00	946.00	1,460.80	0.42	94.60
	gal/min	2.78	0.00	35.22	44.03	44.03	0.43	0.00	0.00	1.76	1.89	2.92	0.00
	Nm^3/h												
	Scfm												
Pressure	mbar												
	psi												
Temperature	°C	40.00		75.00	75.00	75.00	75.00	80.00	80.00	60.00	40.00	60.00	60.00
	°F	104.00		167.00	167.00	167.00	167.00	176.00	176.00	140.00	104.00	140.00	140.00

This document contained Export Control/ International Traffic Arms Regulations Information.

This document contained Export Control/ International Traffic in Arms Regulation Information.

24915-070-V11-M000-00035

STREAM NO.		1				2	3	4	5	6	7	12		14	15	16	17
		SUBCOMPOSITION										SCRAP FOR DISPOSAL					
MEDIUM		MUNITIONS	EXPLOSIVES	AGENT DH	METAL (Munition bodies)	PACKING (Tray)	AIR TO AIR HEATER	COMBUSTION AIR	OFFGAS FROM DC TO BT	OFFGAS FROM BT TO THD	DUST FROM BUFFERTANK	PROCESS VENTILATION 1 FROM SCRAP CABINET	METALS (projectile bodies)	DUST	FLUSHING AIR OF LC1 & LC2 AND PURGING OF SENSORS	PROCESS VENTILATION FROM LOADING SYSTEM	PROCESS VENTILATION 2 FROM SCRAP CABINET	PROCESS VENTILATION 2 FROM BUFFER TANK
AMOUNT	kg/h					3,60					0,66			1,53				
	lbs/h					7,94					1,45			3,36				
	Nm³/h						300,00	300,00	338,89	338,89		3500,00			50,00	250,00	3500,00	500,00
	scf/m						176,57	176,57	199,46	199,46		2060,82			29,43	147,14	2060,82	294,29
PRESSURE	mbar						6000,00	3000,00	variable	variable								
	psi						87,00	43,50	variable	variable								
TEMPERATURE	°C					20,00	20,00	400,00	550,00	300,00	80,00	30,00		30-300	20,00	30,00	30,00	30,00
	°F					68,00	68,00	752,00	1022,00	572,00	176,00	86,00		86-572	68,00	86,00	86,00	86,00

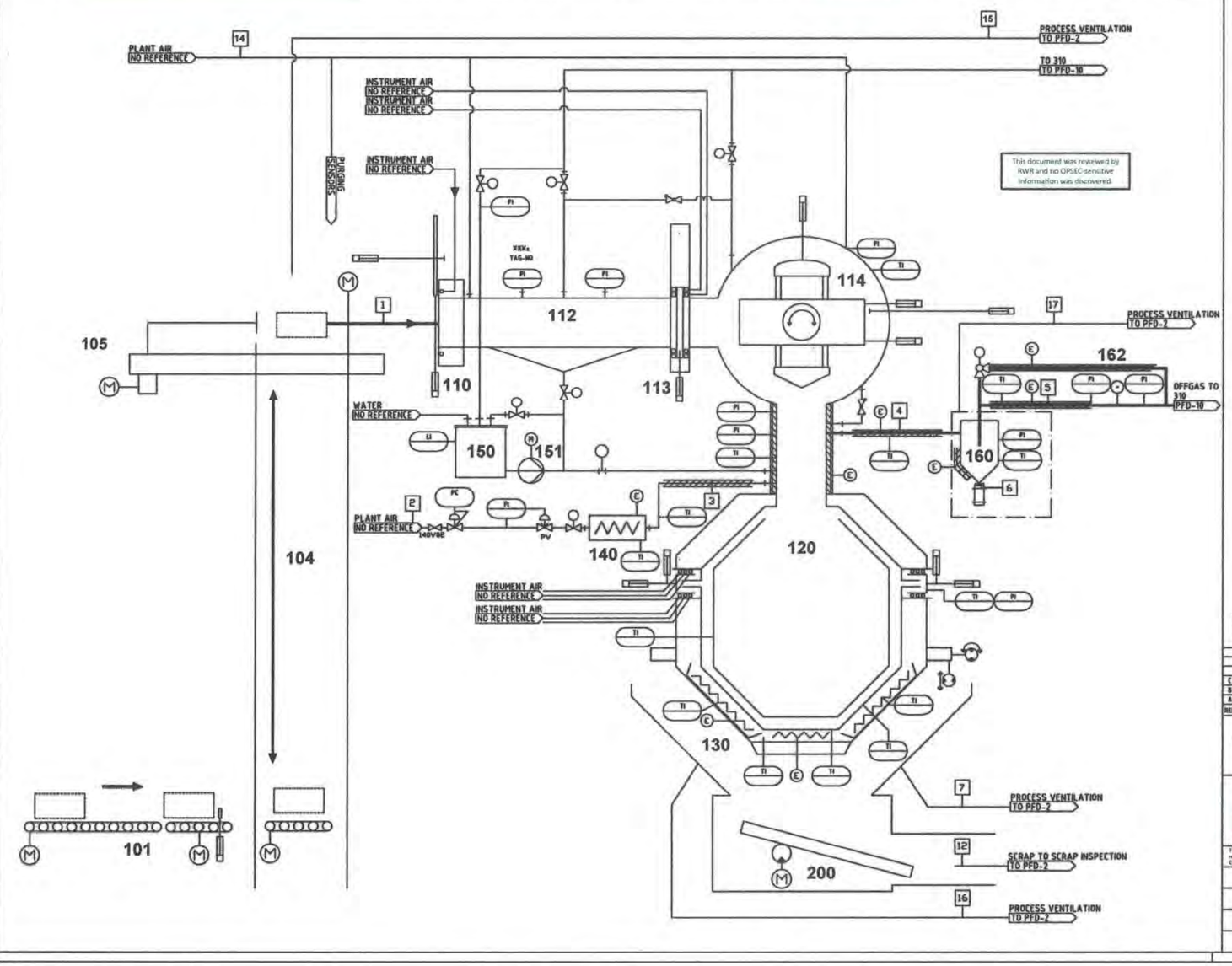

This document was reviewed by RWR and no OPSEC-sensitive information was discovered.

REMARKS

(1) STREAM FIGURES BASED ON A FEEDRATE OF 2,4 BOXES/h CONTAINING 2 pcs OF 155 mm PROJECTILES EACH

COMPONENTS:

101	CONVEYOR 1
104	ELEVATOR
105	LOADING PUSHER 1
110	LOADING GATE 1
112	LOADING CHAMBER 1
113	LOADING GATE 2
114	LOADING CHAMBER 2
120	DESTRUCTION CHAMBER (DC)
130	SCRAP FUNNEL
200	SCRAP CHUTE
140	AIR HEATER
150	WATER TANK
151	WATER PUMP
160	BUFFER TANK
162	ORIFICE

PRELIMINARY
Issue: 18.02.14

PFD-1

REV.	DATE	DESCRIPTION	DRN	CHK	APP
C	18.02.2014	GENERAL REVISION	Hdd	Osb	Osb
B	29.01.2014	GENERAL REVISION	Hdd	Osb	Osb
A	11.12.2013	FIRST ISSUE	Hdd	Osb	Osb

EXPLOSIVE DESTRUCTION TECHNOLOGY (EDT) SYSTEM
BLUE GRASS CHEMICAL AGENT DESTRUCTION PILOT PLANT PROJECT (BGCAPP)
RICHMOND, KENTUCKY 40475
SUBCONTRACT NO. 24915-070-HC1-M000-00001
CONTRACTOR: Bechtel National, Inc. and SUBCONTRACTOR: UXB International, Inc.

BECHTEL UXB DYNASAFE

This document is property of Dynasafe Group Systems SA and cannot be reproduced, disclosed or used by third party or used in any unauthorized manner without written consent.
© 2013 Dynasafe Group Systems SA

MADE BY	TITLE				
Hdd	Blue Grass – SDC 1200 C Process Flow Diagram SDC				
DATE 11-12-2013					
CHECKED BY	DWG STATUS	VIEW TYPE	WEIGHT	SCALE	
-	-	-	-	-	
PROJ. NO. 406	FILE NO. 406-072866-PFD1-A	DRAWING NUMBER 072866		SIZE A1	REV. C

1

This document contained Export Control/International Traffic in Arms Regulations Information.

This document contained Export Control/International Traffic in Arms Regulation Information.

STREAM NO.		7	8	9	10	11	12		13	15	16	17
							SCRAP FOR DISPOSAL					
MEDIUM		PROCESS VENTILATION 1 FROM SCRAP CABINET	PROCESS VENTILATION AFTER FILTER	PROCESS VENTILATION AFTER FAN	DUST FROM CYCLONE	DUST FROM FILTER	METALS (projectile bodies)	DUST	PROCESS VENTILATION FROM SCRAP CABINET	PROCESS VENTILATION FROM LOADING SYSTEM	PROCESS VENTILATION 2 FROM SCRAP CABINET	PROCESS VENTILATION 2 FROM BUFFER TANK
AMOUNT	kg/h				1,68	1,68	189,46	1,53				
	lbs/h				3,70	3,70	417,69	3,36				
	Nm^3/h	3500,00	8000,00	8000,00					250,00	250,00	3500,00	500,00
	scf/m	2060,02	4708,62	4708,62					147,14	147,14	2060,02	294,29
PRESSURE	mbar		-40,00	0,00								
	psi		-0,58	0,00								
TEMPERATURE	°C	30,00	30,00	30,00	20,00	20,00	30-300	30-300	30,00	30,00	30,00	30,00
	°F	86,00	86,00	86,00	68,00	68,00	86-572	86-572	86,00	86,00	86,00	86,00

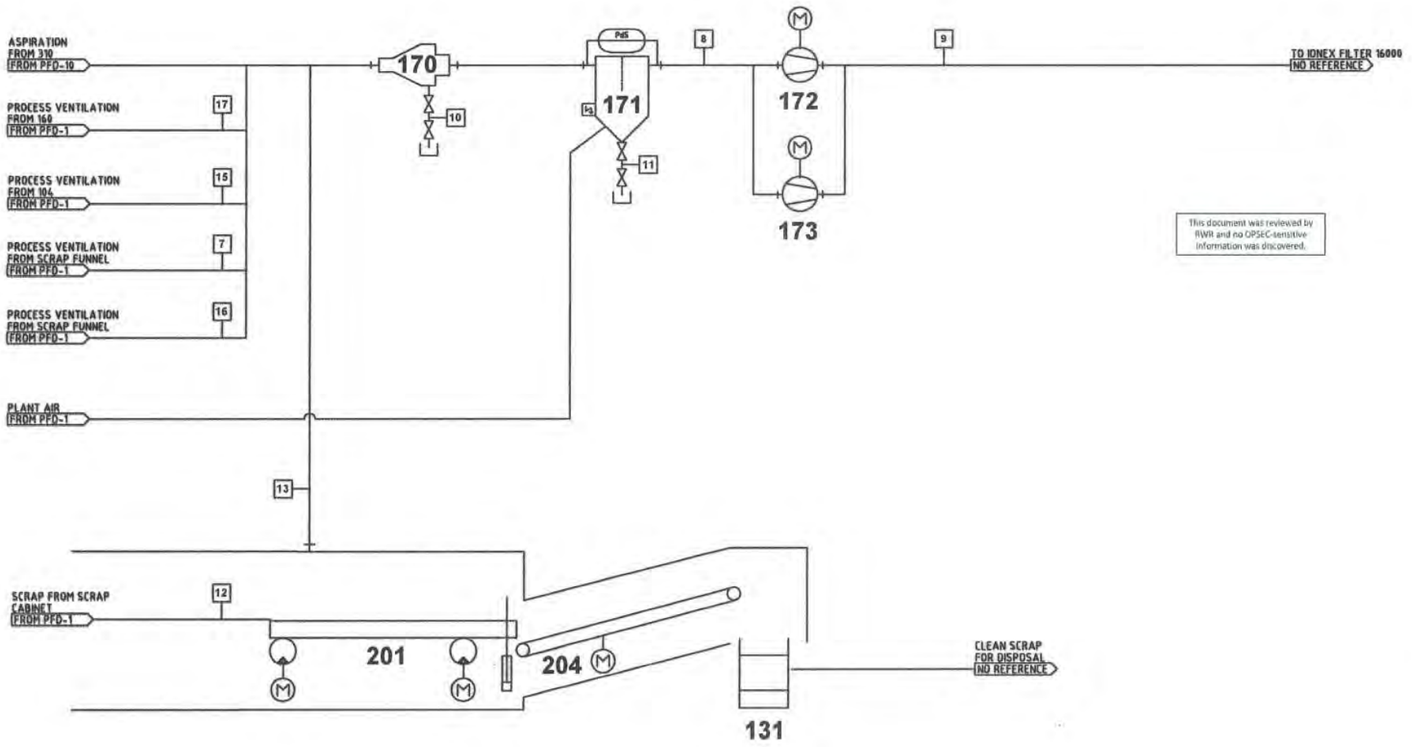

This document was reviewed by RWR and no OPSEC-sensitive information was discovered.

COMPONENTS:

201 SCRAP CONVEYOR 1
204 SCRAP INSPECTION CONVEYOR
131 SCRAP BOX
170 PROCESS VENTILATION CYCLONE
171 PROCESS VENTILATION FILTER
172 PROCESS VENTILATION FAN 1
173 PROCESS VENTILATION FAN 2

PRELIMINARY
Issue: 18.02.14

PFD-2

REV	DATE	DESCRIPTION	DRN	CHK	APP
C	18.02.2014	GENERAL REVISION	Hdd	Dnh	Dnh
B	20.01.2014	GENERAL REVISION	Hdd	Dnh	Dnh
A	11.12.2013	FIRST ISSUE	Hdd	Dnh	Dnh

EXPLOSIVE DESTRUCTION TECHNOLOGY (EDT) SYSTEM
BLUE GRASS CHEMICAL AGENT DESTRUCTION PILOT PLANT PROJECT (BGCAPP)
RICHMOND, KENTUCKY 40475
SUBCONTRACT NO. 24915-070-HC1-M000-00001
CONTRACTOR: Bechtel National, Inc. SUBCONTRACTOR: UXB International, Inc.

BECHTEL UXB DYNASAFE

This document is property of Dynasafe Global Systems AB and must not be reproduced, distributed by any third party or used in any unauthorized manner without written consent.
© 2013 Dynasafe Global Systems AB

MADE BY	TITLE			
Hdd	Blue Grass – SDC 1200 C Process Flow Diagram SDC			
DATE 11-12-2013				
CHECKED BY -	DWG.STATUS -	VIEW TYPE -	WEIGHT -	SCALE -
PROJ. NO. 406	FILE NO. 406-072867-PFD1-A	DRAWING NUMBER 072867	SIZE A1	REV. C

This document contained Export Control/International Traffic in Arms Regulations Information.

STREAM NO		50	51	52	53	70	71	71A	72	75	76	77A	77B	77C	80	81	85	90	91
MEDIUM		OFF GAS FROM SDC	FLUE GAS FROM THERMAL OXIDIZER	FLUE GAS FROM SPRAY DRYER	FLUE GAS FROM BAG HOUSE FILTER	NATURAL GAS	AIR	AIR	POTABLE WATER	ADDITIVE	COMPRESSED AIR FROM COMPRESSOR	COMPRESSED AIR TO SPRAY DRYER	COMPRESSED AIR TO ADDITIVE DOSING	COMPRESSED AIR TO BAG HOUSE FILT	PROCESS WATER TO SPRAY DRYER	EMERGENCY WATER TO DRYER / QUENCH	BLEED TO PW TANK	RESIDUES FROM SPD TO DEPOSIT	RESIDUES FROM BHF TO DEPOSIT
AMOUNT	kg/h								152	32,89					631,00	ONLY EMERGENCY	98	0,19	43
	gal/min								0,67	72,35 lbs/h					2,78		0,431	0,42 lbs/h	94,6 lbs/h
	Nm³/h	338,89	1273,70	2436,43	2420,01	56	592	176			300	250	20	30					
	scf/m	199,46	749,67	1434,35	1424,35	32,96	348,44	103,59			177	147	11,80	18					
OPERATION PRESSURE	mbar g	VARIABLE	-10,00	-35,00	-55,00	30,00	30,00												
	psi g	VARIABLE	-0,15	-0,51	-0,80	0,44	0,44												
OPERATION TEMPERATURE	°C	300,0	1130,0	180,0	180,0	20,0	20,0	20,0	20,0	20,0	20,0	20,0	20,0	20,0	40,0		75,0	60,0	60,0
	°F	572,0	2066,0	356,0	356,0	68,0	68,0	68,0	68,0	68,0	68,0	68,0	68,0	68,0	104,00		167,0	140,0	140,0

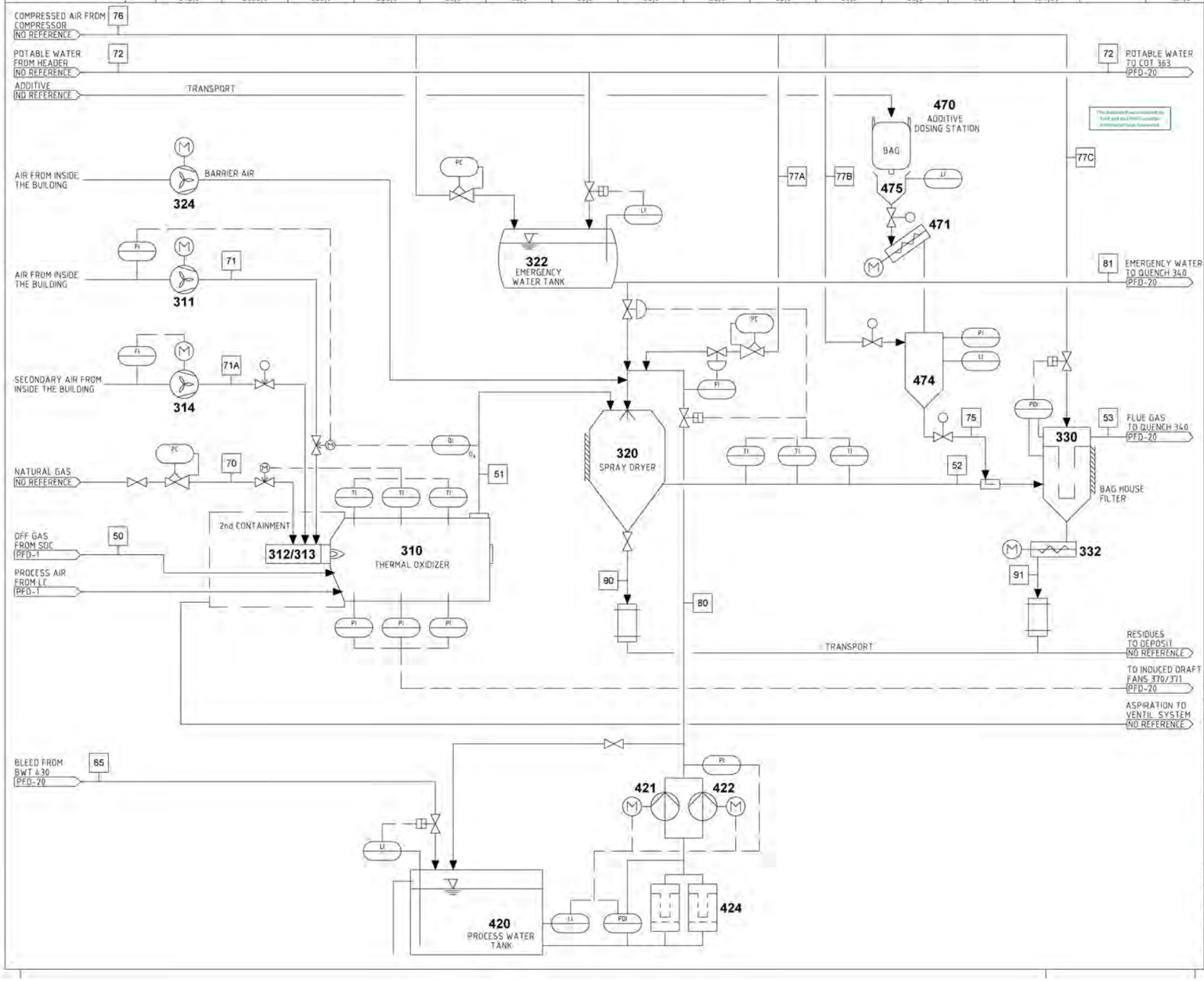

NOTES: ALL DESIGN HAS BEEN DONE BASED ON SI-UNITS
X1 = FLANGE FOR CHEMICAL AGENT MEASURING

FOR LOAD CASE
4,8 x 155 mm H / HOUR
INCLUDING PACKING MATERIAL

COMPONENTS:

310 THERMAL OXIDIZER (THO)
311 THERMAL OXIDIZER AIR FAN (THF)
312 THERMAL OXIDIZER NOZZLE (THN)
313 IGNITION BURNER (IGB)
314 THERMAL OXIDIZER SECONDARY AIR FAN (SAF)
320 SPRAY DRYER (SPD)
322 EMERGENCY WATER TANK (EWT)
324 SPRAY DRYER AIR FAN (SPF)
330 BAG HOUSE FILTER (BHF)
332 BHF SCREW CONVEYOR (BSC)
420 PROCESS WATER TANK (PWT)
421 PROCESS WATER PUMP 1 (PWP1)
422 PROCESS WATER PUMP 2 (PWP2)
424 PROCESS WATER FILTER (PWF)
470 ADDITIVE DOSING STATION (ADS)
471 SCREW CONVEYOR 1 (SEC1)
474 ADDITIVE SENDER (ASE)
475 BIG BAG UNLOADER (BBU)

PFD-10

REV	DATE	DESCRIPTION	DRN	CHK	APP
C	13.02.2014	AFTER REVIEW FROM BECHTEL	SR	RS	
B	20.01.2014	30 DAY DOCUMENT DELIVERY (REVIEW)	SR	RS	
A	03.12.2013	30 DAY DOCUMENT DELIVERY	SR	HW	

EXPLOSIVE DESTRUCTION TECHNOLOGY (EDT) SYSTEM
BLUE GRASS CHEMICAL AGENT DESTRUCTION PILOT PLANT PROJECT (BGCAPP)
RICHMOND, KENTUCKY 40475
SUBCONTRACTOR NO. 24915-070-HC1-M000-00001
CONTRACTOR: Bechtel National, Inc; SUBCONTRACTOR: UXB International, Inc

This document is property of Dynasafe Demil Systems AB and must not be reproduced, disclosed to any third party or used in any unauthorized manner without written permission.
© DSI Dynasafe Demil Systems AB

MADE BY	RS
DATE	02.12.2013
CHECKED BY	SR
PROJ NO	406
TITLE	**Bluegrass – SDC 1200 C** **Process Flow Diagram** **Thermal Oxidizer to Bag House Filter**
DWG STATUS	
VIEW TYPE	
WEIGHT	
SCALE	NTS
FILE NO	406-PFD-10
DRAWING NUMBER	22-406-582513-PFD-10
SIZE	A1
REV	C

This document contained Export Control/International Traffic in Arms Regulations Information.

1

STREAM NO.		53	54	55	56	56A	57	58	72	72A	72B	73A	73B	81	82	83	84	85	85A	86	88	89
MEDIUM		FLUE GAS FROM BAG HOUSE FILTER	FLUE GAS FROM QUENCH	FLUE GAS FROM ACID SCRUBBER	FLUE GAS FROM NEUTRAL SCRUBBER	FLUE GAS FROM HEAT EXCHANGER	FLUE GAS FROM INDUCED DRAFT FAN	FLUE GAS TO STACK	POTABLE WATER	CONDENSATE WATER TO ACID SCRUBBER	CONDENSATE WATER TO NEUTR. SCRUBB.	NaOH (25%) TO BLEED TANK	NaOH (25%) TO NEUTR. SCRUBB	EMERGENCY WATER TO DRYER / QUENCH	CIRCULATION WATER QUENCH	CIRCULATION WATER ACID SCRUBBER	CIRCULATION WATER NEUTRAL SCRUBBER	BLEED TO PW TANK	ACID SCRUBBER BLEED TO BW TANK	NEUTRAL SCRUBBER BLEED TO BW TANK	CONDENSATE TO CO TANK	WATER TO SCRUBBER
AMOUNT	l/h								152	248	416	8,31	39,58	ONLY Y EMERGENCY	8000	10000	10000	98	VARIABLE	400	430	664
	gal/min								0,67	1,09	1,83	0,04	0,18		35,22	44,03	44,03	0,43	VARIABLE	1,76	1,89	2,92
	Nm³/h	2420,01	2337,01	2331,91	2331,91	1783,72	1783,72	1783,72														
	scf/m	1424,36	1375,51	1372,51	1372,51	1049,86	1049,86	1049,86														
OPERATION PRESSURE	mbar g	-55,00	-80,00	-85,00	-90,00		50,00	50,00														
	psi g	-0,80	-1,16	-1,23	-1,31		0,73	0,73														
OPERATION TEMPERATURE	°C	180,0	78,0	78,0	75,0	80,0	80,0	80,0	20,0	40,0	40,0	20,0	20,0		75,0	75,0	75,0	75,0	80,0	80,0	60,0	40,0
	°F	356,0	172,0	172,0	167,0	176,0	176,0	176,0	68,0	104,0	104,0	68,0	68,0		167,0	167,0	167,0	167,0	176,0	176,0	140,0	104,0

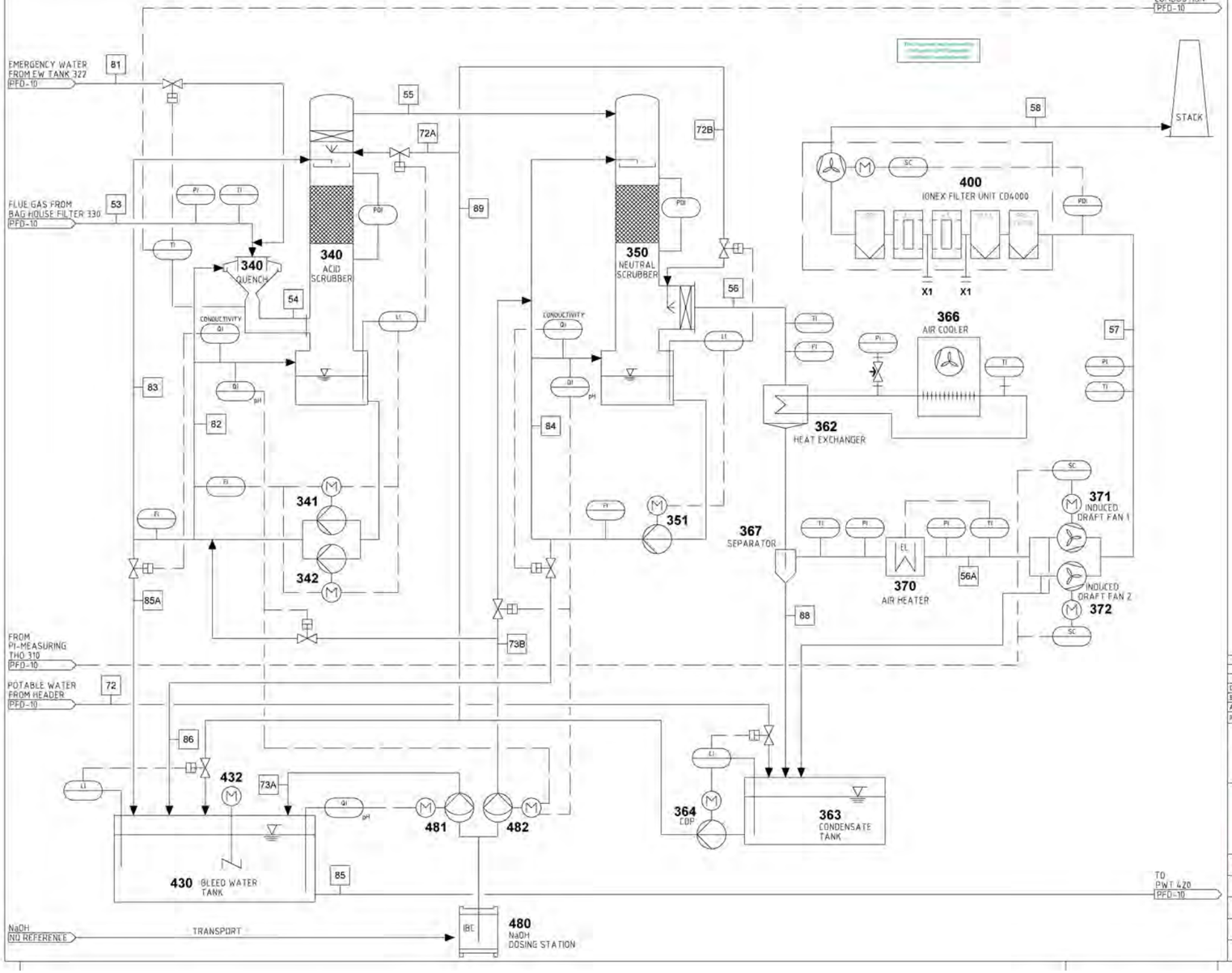

NOTES: ALL DESIGN HAS BEEN DONE BASED ON SI-UNITS
X1 = FLANGE FOR CHEMICAL AGENT MEASURING

FOR LOAD CASE
4,8 x 155 mm H / HOUR
INCLUDING PACKING MATERIAL

COMPONENTS:

340	ACID SCRUBBER (ASC) / QUENCH (QUE)
341	QUENCH PUMP 1 (QUP1)
342	QUENCH PUMP 2 (QUP2)
350	NEUTRAL SCRUBBER (NSC)
351	NEUTRAL SCRUBBER PUMP (NSP)
362	HEAT EXCHANGER (HEX)
363	CONDENSATE TANK (COT)
364	CONDENSATE PUMP (COP)
366	AIR COOLER (AIC)
367	SEPARATOR (SEP)
370	AIR HEATER (AHT)
371	INDUCED DRAFT FAN 1 (IDF1)
372	INDUCED DRAFT FAN 2 (IDF2)
400	IONEX FILTER (IOF)
430	BLEED WATER TANK (BWT)
432	AGITATOR BW (AGT)
480	NaOH DOSING STATION (NAS)
481	NaOH PUMP 1 (NAP1)
482	NaOH PUMP 2 (NAP2)

PFD-20

REV.	DATE	DESCRIPTION	DRN	CHK	APP
C	13.02.2014	AFTER REVIEW FROM BECHTEL	SR	RS	
B	20.01.2014	30 DAY DOCUMENT DELIVERY (REVIEW)	SR	RS	
A	03.12.2013	30 DAY DOCUMENT DELIVERY	SR	HW	

EXPLOSIVE DESTRUCTION TECHNOLOGY (EDT) SYSTEM
BLUE GRASS CHEMICAL AGENT DESTRUCTION PILOT PLANT PROJECT (BGCAPP)
RICHMOND, KENTUCKY 40475
SUBCONTRACTOR NO. 24915-070-HC1-M000-00001
CONTRACTOR: Bechtel National, Inc. SUBCONTRACTOR: UXB International, Inc.

BECHTEL UXB DYNASAFE

This document is property of Dynasafe Group Systems AB and must not be reproduced, disclosed to any third party or used in any way whatsoever without written consent.
© 2013 Dynasafe Group Systems AB

MADE BY: SR	TITLE: Bluegrass – SDC 1200 C Process Flow Diagram Quench to Stack			
DATE: 02.12.2013				
CHECKED BY: RS	DWG STATUS	VIEW TYPE	WEIGHT	SCALE: NTS
PROJ. NO.: 406	FILE NO.: 406-PFD-20	DRAWING NUMBER: 22-406-582514-PFD-20	SIZE: A1	REV.: C

2

This document contained Export Control/International Traffic in Arms Regulations Information.

Appendix D-2: **Piping & Instrumentation Diagrams (P&IDs)**

Vendor P&ID drawings are currently ~~"P~~RELIMINARY" and final vendor P&IDs will not be provided until design progresses. However, these P&ID drawings, although ~~"P~~reliminary," can be used to become familiar with the SDC and to identify potential compliance issues associated with its design.

This document has been reviewed for ITAR/EAR and no ITAR/EAR sensitive information was found.

24915-070-V11-M000-00038

GENERAL

- MAIN FLOW LINE, MAIN PIPING
- SUBSIDIARY FLOW LINE, PIPING
- SIGNAL LINE
- BORDER LINE
- TRANSPORT — TRANSPORT LINE
- LINE BREAK
- DIRECTION ARROW (FLOW/MOTION)
- PID-00xx — DESTINATION ARROW (IN/OUT) WITH PID NUMBER
- 1 N — INSIDE CONTAINER 1...N IN DIRECTION OF ARROW
- PIPING LIMIT
- 50 — STREAM NUMBER
- LEVEL
- SLOPE
- INSULATION (COMPONENTS)
- INSULATION (PIPING)
- INSULATION AND HEATING (PIPING)
- REFRACTORY (COMPONENTS)
- REFRACTORY (PIPING)
- DRAIN TRAY
- DRAIN TRAY WITH SUMP

COMPONENTS

- CONTAINER, IBC
- BARREL
- BAG
- AIR CYLINDER, GAS CYLINDER
- FIRING SYSTEM, BURNER
- CARTRIDGE FILTER
- ACTIVATED CARBON FILTER
- GAS FILTER, AIR FILTER
- SCREW CONVEYOR)
- ELECTRIC MOTOR
- AGITATOR (GENERAL)
- CENTRIFUGAL PUMP
- DIAPHRAGM PUMP
- BLOWER, FAN (GENERAL)
- RECIPROCATING VACUUM PUMP, SUCTION AID
- HEATING, COOLING (GENERAL)
- ROTARY VALVE
- DISTRIBUTION DEVICE FOR FLUIDS, SPRAY NOZZLE
- CRUSHING MACHINE (GENERAL)
- EL. — ELECTRIC HEATER
- DEMISTER

COMPONENTS

- ROLLER CONVEYOR
- BELT CONVEYOR
- VIBRATION CONVEYOR
- DRYER
- PARTICLE FILTER
- INLINE CYCLONE
- H — HYDRAULIC CYLINDER
- P — PNEUMATIC CYLINDER
- SILENCER
- AIR HEATER
- ELECTRICAL CONSUMER
- HYDRAULIC MOTOR
- VIBRATOR

PIPING, CONNECTIONS

- INLET / OUTLET TO ATMOSPHERE
- FLANGE, FLANGED CONNECTION
- SCREWING, SCREWED CONNECTION
- COUPLING
- A"/B" — REDUCING
- HOSE
- COMPENSATOR (FLANGED)
- INLET PIPE
- PIPE CLAMP, HOSE CLAMP
- SMALL FLANGE CONNECTION
- PLUG-IN CONNECTION
- SILENCER

VALVES

- VALVE (GENERAL)
- REGULATION VALVE (GENERAL)
- PRESSURE CONTROL VALVE (GENERAL)
- FILTER, STRAINER
- SIGHT GLASS
- BALL VALVE
- 3-WAY BALL VALVE
- FLAP
- CHECK FLAP
- CHECK VALVE
- CHECK VALVE (SPRING LOADED)
- GATE VALVE
- GLOBE VALVE
- GLOBE VALVE
- REGULATION VALVE, NEEDLE VALVE
- CONTROL VALVE (CONTINUOUSLY OPERATED)
- PRESSURE CONTROL VALVE
- BYPASS VALVE (SPRING LOADED)
- INJECTOR, MIXING NOZZLE
- SAFETY VALVE (SPRING LOADED)
- ANGLE SAFETY VALVE (SPRING LOADED)
- ORIFICE PLATE (FLANGED)
- BLIND PLATE (FLANGED)
- MAINTENANCE UNIT AGAINST OPENING BY MISTAKE)
- LC — LOCKED CLOSE (MECHANICALLY PROTECTED
- LO — LOCKED OPEN (MECHANICALLY PROTECTED AGAINST CLOSING BY MISTAKE)
- PRESSURE REGULATOR

VALVE ACTUATOR

- ACTUATOR (GENERAL)
- M — MOTOR ACTUATOR
- SOLENOID ACTUATOR
- PNEUMATIC ACTUATOR
- PNEUMATIC ACTUATOR (DIAPHRAGM)
- SAFETY POSITION WHEN ENERGY FAILS OPEN/CLOSE IN DIRECTION OF ARROW
- SAFETY POSITION WHEN ENERGY FAILS REMAINS IN LAST POSITION

LETTER CODE INSTRUMENTS

EXAMPLE XXXx / TAG-NO — SEE DOCUMENT POSITION NUMBERING AND CODIFICATION SYSTEM NO. 070158

INSTRUMENTS

- XXXx / TAG-NO — EMC FUNCTION GENERAL LOCAL
- XXXx / TAG-NO — EMC FUNCTION GENERAL TO PROCESS CONTROL CENTER
- XXXx / TAG-NO — EMC FUNCTION GENERAL TO LOCAL CONTROL STATION
- XXXx / TAG-NO — EMC FUNCTION WITH PROCESS CONTROL SYSTEM LOCAL
- XXXx / TAG-NO — EMC FUNCTION WITH PROCESS CONTROL SYSTEM TO PROCESS CONTROL CENTER
- XXXx / TAG-NO — EMC FUNCTION WITH PROCESS CONTROL SYSTEM TO LOCAL CONTROL STATION
- XXXx / TAG-NO — EMC FUNCTION WITH PROCESS COMPUTER TO PROCESS CONTROL CENTER
- XXXx / TAG-NO — INSTRUMENT IN LINE, (FLANGED)
- CAMERA
- CAMERA WITH LIGHT
- MICROPHONE

PRELIMINARY
Issue: 18.02.14

PID-1

REV.	DATE	DESCRIPTION	DRN	CHK	APP
C	18.02.2014	GENERAL REVISION	Hdd	Dnh	Dnh
B	20.01.2014	GENERAL REVISION AND PIPE NUMBERS	Hdd	Dnh	Dnh
A	11.12.2013	FIRST ISSUE	Hdd	Dnh	Dnh

EXPLOSIVE DESTRUCTION TECHNOLOGY (EDT) SYSTEM
BLUE GRASS CHEMICAL AGENT DESTRUCTION PILOT PLANT PROJECT (BGCAPP)
RICHMOND, KENTUCKY 40475
SUBCONTRACT NO: 24915-070-HCT-M000-00001
CONTRACTOR: Bechtel National Inc. SUBCONTRACTOR: UXB International, Inc.

BECHTEL — UXB — DYNASAFE

This document is property of Dynasafe Group Systems AB and must not be reproduced or disclosed without prior written consent.
© 2013 Dynasafe Group Systems AB

MADE BY	TITLE			
Hdd	Blue Grass – SDC 1200 C Pipe & Instrument Diagram Symbols and Nomenclature			
DATE 11-12-2013				
CHECKED BY	DWG STATUS	VIEW TYPE	WEIGHT	SCALE
-	-	-	-	-
PROJ. NO. 406	FILE NO. 406-PID1-072858-A	DRAWING NUMBER 072858	SIZE A1	REV. C

This document has been reviewed for ITAR/EAR and no ITAR/EAR sensitive information was found.

24915-070-V11-M000-00039

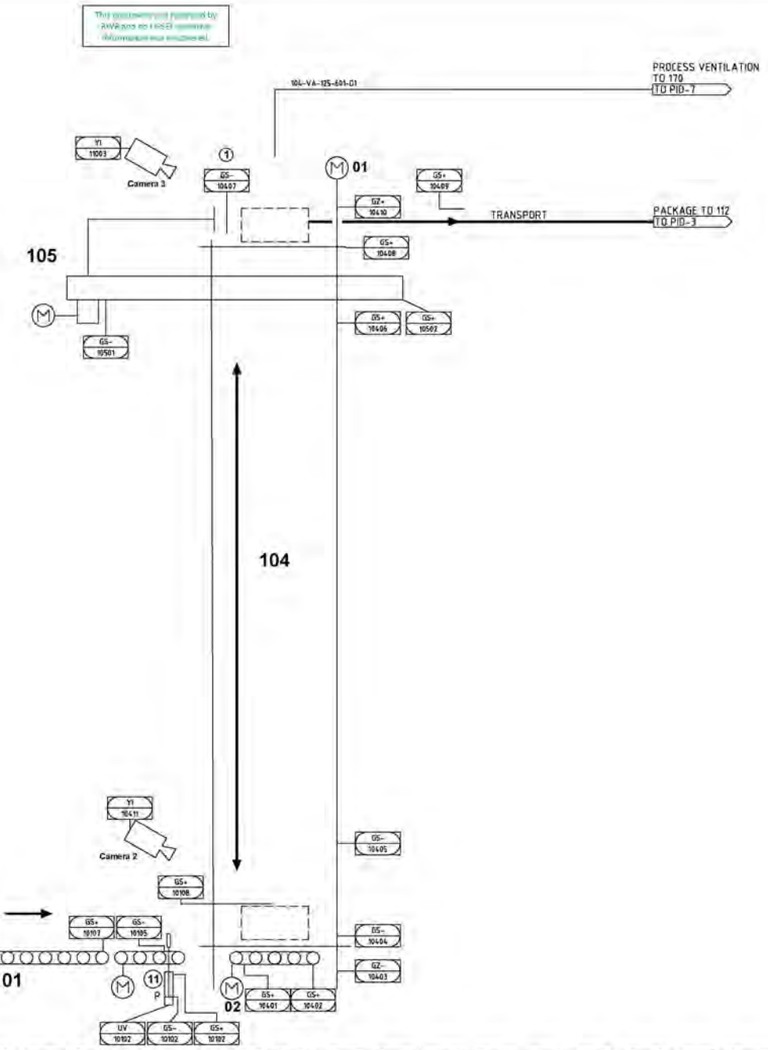

REMARKS

(1) POSITION SENSOR ONLY FOR REVERSE TRANSPORT IN CASE OF A PROBLEM

(11) IA LINE NOT SHOWN ON PID-2 FOR CLARITY
REFERENCE TO PID-8

COMPONENTS:
101 CONVEYOR 1
104 ELEVATOR
105 LOADING PUSHER 1

COMPONENT NO.		101	104	105
NAME		CONVEYOR 1	ELEVATOR	LOADING PUSHER 1
MEDIUM		Roller Conveyor	Elevator	Pusher
TECHNICAL DATA		0,55 kW + 0,37 kW	1.5 + 0.37 kW	0,55 kW
		0,75hp + 0,5hp	2 + 0.5 hp	0,75hp
		8 m/min	15 m/min	15 m/min
		26 ft/min	49 ft/min	49 ft/min
DESIGN PRESSURE	bar g	-	-	-
	psi g	-	-	-
DESIGN TEMPERATURE	°C	Ambient	Ambient	Ambient
	°F	Ambient	Ambient	Ambient
MATERIAL		Mild Steel	Mild Steel	Mild Steel
REMARKS		12 Boxes accumulated	-	Electric operated

REV.	DATE	DESCRIPTION	DRN	CHK	APP
C	18.02.2014	GENERAL REVISION	Hdd	Dnh	Dnh
B	20.01.2014	GENERAL REVISION AND PIPE NUMBERS	Hdd	Dnh	Dnh
A	11.12.2013	FIRST ISSUE	Hdd	Dnh	Dnh

PRELIMINARY
Issue: 18.02.14

PID-2

EXPLOSIVE DESTRUCTION TECHNOLOGY (EDT) SYSTEM
BLUE GRASS CHEMICAL AGENT DESTRUCTION PILOT PLANT PROJECT (BGCAPP)
RICHMOND, KENTUCKY 40475
SUBCONTRACT NO. 24915-070-HC1-M000-00001
CONTRACTOR: Bechtel National, Inc. SUBCONTRACTOR: UXB International, Inc.

BECHTEL UXB DYNASAFE

This document is property of Dynasafe and contains confidential information. It may not be reproduced, disclosed or used without written consent.
© 2014 Dynasafe

MADE BY	TITLE				
Hdd	Blue Grass – SDC 1200 C Pipe & Instrument Diagram Conveyor System				
DATE					
11-12-2013					
CHECKED BY	DWG STATUS:	VIEW TYPE	WEIGHT	SCALE	
-	-	-	-	-	
PROJ. NO.	FILE NO.	DRAWING NUMBER		SIZE	REV.
406	406-PID1-072859-A	072859		A1	C

1

This document contained Export Control/International Traffic in Arms Regulations Information.

This document has been reviewed for ITAR/EAR and no ITAR/EAR sensitive information was found.

24915-070-V11-M000-00040

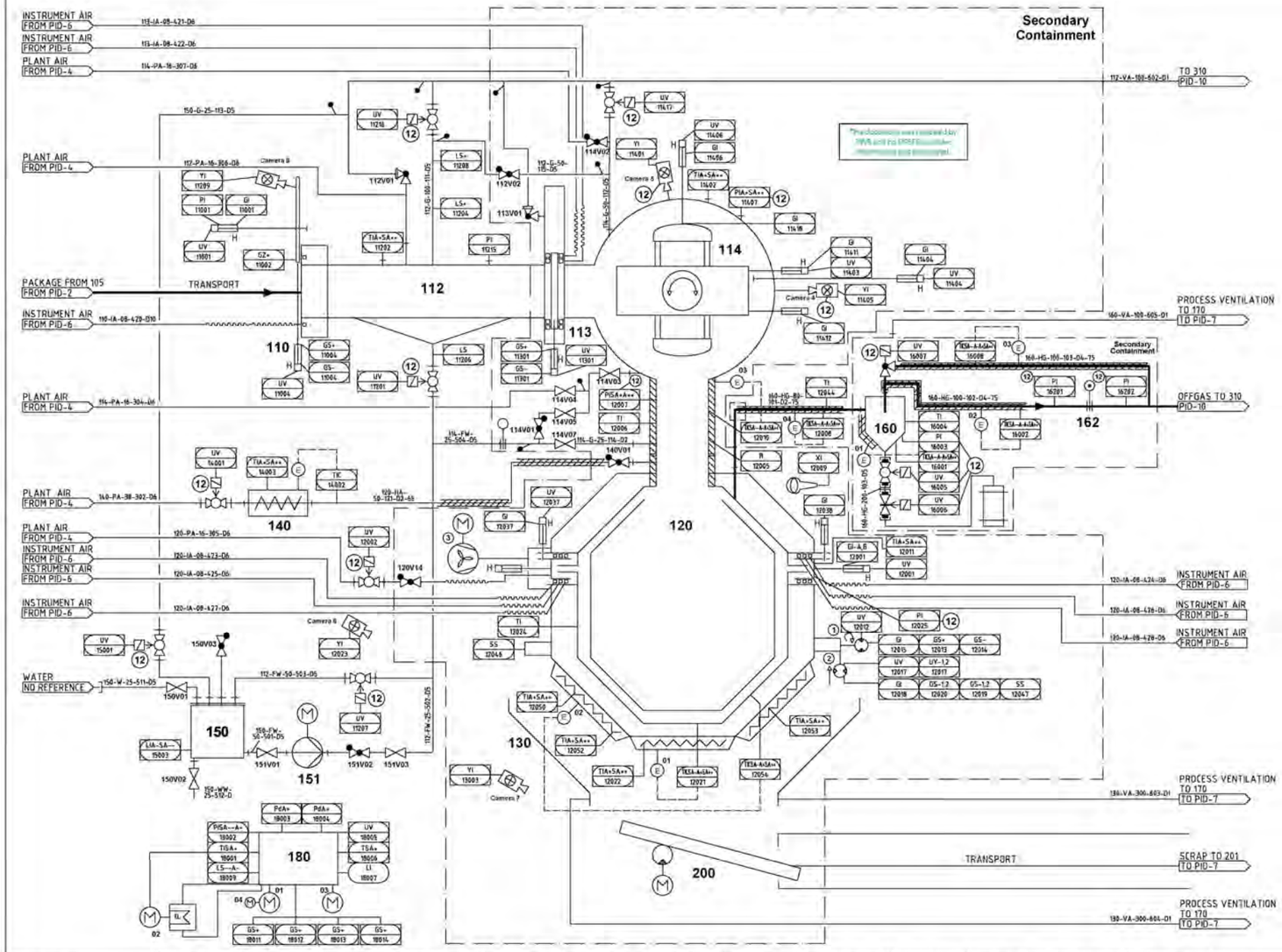

REMARKS

1. MOTOR FOR ROTATING KILN
2. MOTOR FOR LIFTING/LOWERING THE KILN
3. FOUR FANS TO COOL THE LOCKING RING
12. IA LINE NOT SHOWN ON PID-3 FOR CLARITY REFERENCE TO PID-8

COMPONENTS:

110	LOADING GATE 1
112	LOADING CHAMBER 1
113	LOADING GATE 2
114	LOADING CHAMBER 2
120	DESTRUCTION CHAMBER (DC)
130	SCRAP FUNNEL
140	AIR HEATER
150	WATER TANK
151	WATER PUMP
160	BUFFER TANK
162	ORIFICE
180	HYDRAULIC POWER UNIT
200	SCRAP CHUTE

HEATER TRACING:

120-E01	DC HEATER, BOTTOM
120-E02	DC HEATER, CONICAL PART
120-E03	TRACING DC TOWER
120-E04	TRACING OFF-GAS PIPE
160-E01	TRACING BUFFER TANK
160-E02	TRACING OFF-GAS PIPE
160-E03	TRACING BY-PASS PIPE

PRELIMINARY
Issue: 18.02.14

PID-3

REV.	DATE	DESCRIPTION	DRN	CHK	APP
C	18.02.2014	GENERAL REVISION	Hdd	Onh	Onh
B	28.01.2014	GENERAL REVISION AND PIPE NUMBERS	Hdd	Onh	Onh
A	11.12.2013	FIRST ISSUE	Hdd	Onh	Onh

EXPLOSIVE DESTRUCTION TECHNOLOGY (EDT) SYSTEM
BLUE GRASS CHEMICAL AGENT DESTRUCTION PILOT PLANT PROJECT (BGCAPP)
RICHMOND, KENTUCKY 40475
SUBCONTRACT NO. 24915-070-HC1-M000-00001
CONTRACTOR: Bechtel National, Inc. SUBCONTRACTOR: UXB International, Inc.

© 2013 Dynasafe Demil Systems AB

MADE BY	Hdd
DATE	11-12-2013
CHECKED BY	–
TITLE	Blue Grass – SDC 1200 C Pipe & Instrument Diagram SDC
DWG.STATUS	–
VIEW TYPE	–
WEIGHT	–
SCALE	–
PROJ NO.	406
FILE NO.	406-PID1-072860-A
DRAWING NUMBER	072860
SIZE	A1
REV.	C

COMPONENT NO.		110	112	113	114	120	130	200	140	150	151	160	162	180
NAME		LOADING GATE 1	LOADING CHAMBER 1	LOADING GATE 2	LOADING CHAMBER 2	DESTRUCTION CHAMBER (DC)	SCRAP FUNNEL	SCRAP CHUTE	AIR HEATER	WATER TANK	WATER PUMP	BUFFER TANK	ORIFICE	HYDRAULIC POWER UNIT
MEDIUM		First Gate	First chamber	Second Gate	Second chamber	SDC	-	Vibrating conveyor	Air heater	Water tank	Pump	Buffer Tank	-	Hydraulic power
TECHNICAL DATA		-	450 L	-	4 m^3	42 kW	-	1,4 kW	50 kW	850 L	2,2 kW	11,75 kW	-	30 kW, 4kW, 1,5kW, 0,75kW
		-	16 ft^3	-	141 ft^3	56 hp	-	1,9 hp	67 hp	30 ft^3	3 hp	15,8 hp	-	40 hp, 5,3 hp, 2 hp, 1 hp
		-	-	-	-	1,5 m^3	-	-	350 Nm^3/h	-	180 L	-	-	28, 10, 5,8 gal/min
		-	-	-	-	53 ft^3	-	-	206 cfm	-	47,5 gpm	-	-	240 L
		-	-	-	-	-	-	-	-	-	-	-	-	63 gal
DESIGN PRESSURE	barg	1,0	1,0	12,5	12,5	18	-	-	11,3	Atmospheric	16	10	-	160, 100, 2
	psi g	14,5	14,5	181	181	261	-	-	164	Atmospheric	232	145	-	2321, 1450, 29
DESIGN TEMPERATURE	°C	100	100	150	550/200	700/550/400	-	-	537	80	40	500	-	-
	°F	212	212	302	1022/392	1292/1022/752	-	-	1000	176	104	932	-	-
MATERIAL		Stainless steel	Stainless steel	Mild steel/Stainless steel	Mild steel/Stainless steel	Mild steel/Stainless steel	-	Mild steel	Incoloy 800/Stainless steel	Stainless steel	Stainless steel	Stainless steel	-	Stainless steel
REMARKS		Gastight, hydraulic operated	Gastight	Gastight, hydraulic operated	Gastight, hydraulic operated	Gastight, electric heated	To be submitted	-	Electric heated	-	Magnetic drive seal-less	Electric heat traced	To be submitted	Main, UPS, Cooling Pump

This document contained Export Control/International Traffic in Arms Regulations Information.

This document has been reviewed for ITAR/EAR and no ITAR/EAR sensitive information was found.

24915-070-V11-M000-00041

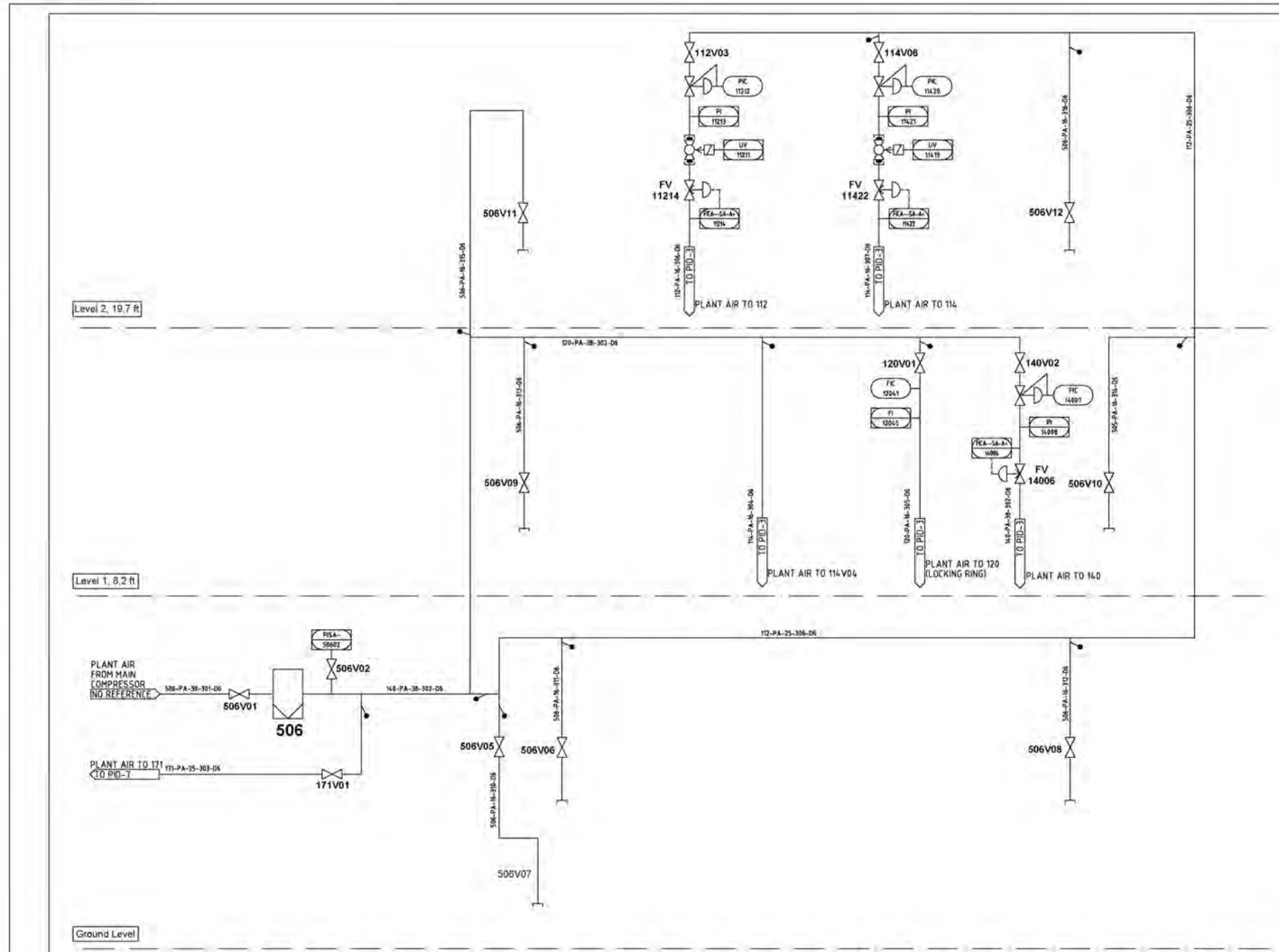

COMPONENT NO.		506
NAME		AIRFILTER
MEDIUM		–
TECHNICAL DATA		–
		–
		–
		–
		–
DESIGN PRESSURE	barg	–
	psig	–
DESIGN TEMPERATURE	°C	–
	°F	–
MATERIAL		–
REMARKS		To be submitted

COMPONENTS:
506 AIRFILTER

This document was reviewed by WWK and no ITAR/EAR sensitive information was discovered.

PRELIMINARY
Issue: 18.02.14

PID-4

REV.	DATE	DESCRIPTION	ORIH	CHK	APP
C	18.02.2014	GENERAL REVISION	Hdd	Onh	Onh
B	20.01.2014	GENERAL REVISION AND PIPE NUMBERS	Hdd	Onh	Onh
A	11.12.2013	FIRST ISSUE	Hdd	Onh	Onh

EXPLOSIVE DESTRUCTION TECHNOLOGY (EDT) SYSTEM
BLUE GRASS CHEMICAL AGENT DESTRUCTION PILOT PLANT PROJECT (BGCAPP)
RICHMOND, KENTUCKY 40475
SUBCONTRACT NO. 24915-070-HC1-M000-00001
CONTRACTOR: Bechtel National, Inc. SUBCONTRACTOR: UXB International, Inc.

BECHTEL UXB DYNASAFE

This drawing is the property of Dynasafe and is not to be used, copied or disclosed to any third party without prior written consent. ©2013 Dynasafe Group Services AG

MADE BY	Hdd
DATE	11-12-2013
CHECKED BY	–
PROJ. NO.	406
TITLE	Blue Grass – SDC 1200 C Pipe & Instrument Diagram Plant Air
DWG STATUS	–
VIEW TYPE	–
WEIGHT	–
SCALE	–
FILE NO.	406-PID1-072861-A
DRAWING NUMBER	072861
SIZE	A1
REV.	C

1

This document has been reviewed for ITAR/EAR and no ITAR/EAR sensitive information was found.

24915-070-V11-M000-00042

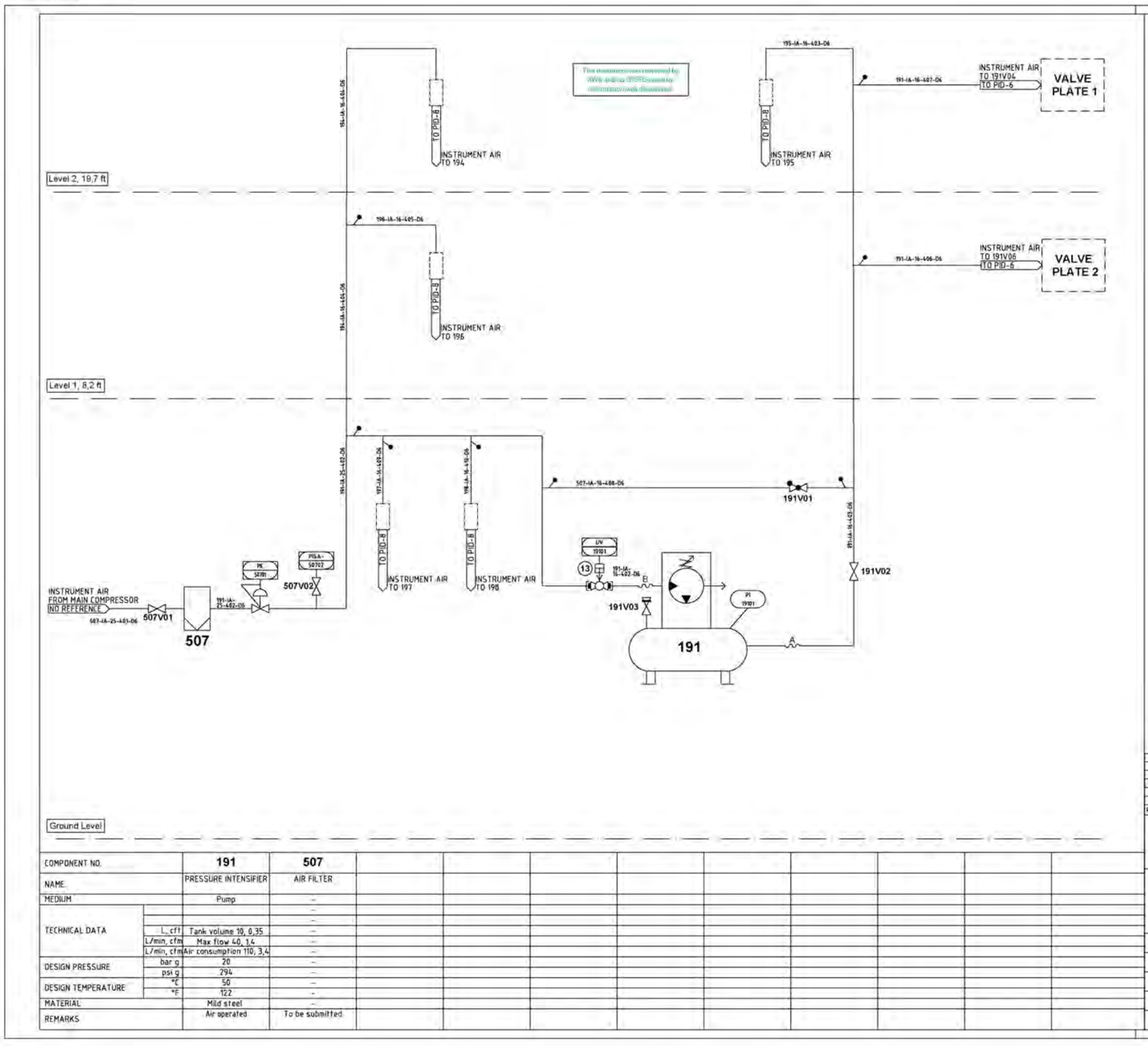

COMPONENT NO.		191	507									
NAME		PRESSURE INTENSIFIER	AIR FILTER									
MEDIUM		Pump	–									
TECHNICAL DATA			–									
	L, cft	Tank volume 10, 0,35	–									
	L/min, cfm	Max flow 40, 1,4	–									
	L/min, cfm	Air consumption 110, 3,4	–									
DESIGN PRESSURE	bar g	20	–									
	psi g	294	–									
DESIGN TEMPERATURE	°C	50	–									
	°F	122	–									
MATERIAL		Mild steel	–									
REMARKS		Air operated	To be submitted									

REMARKS

(13) IA LINE NOT SHOWN ON PID-5 FOR CLARITY REFERENCE TO PID-8

COMPONENTS:

191 PRESSURE INTENSIFIER
507 AIR FILTER

PRELIMINARY
Issue: 18.02.14

PID-5

REV.	DATE	DESCRIPTION	DRN	CHK	APP
C	18.02.2014	GENERAL REVISION	Hdd	Dnh	Dnh
B	23.01.2014	GENERAL REVISION AND PIPE NUMBERS	Hdd	Dnh	Dnh
A	11.12.2013	FIRST ISSUE	Hdd	Dnh	Dnh

EXPLOSIVE DESTRUCTION TECHNOLOGY (EDT) SYSTEM
BLUE GRASS CHEMICAL AGENT DESTRUCTION PILOT PLANT PROJECT (BGCAPP)
RICHMOND, KENTUCKY 40475
SUBCONTRACT NO. 24915-070-HC1-M000-00001
CONTRACTOR: Bechtel National, Inc. SUBCONTRACTOR: UXB International, Inc.

BECHTEL UXB DYNASAFE

Proprietary information is the property of Dynasafe and/or its affiliates. Intended use by Dynasafe and authorized third parties. Unauthorized use, duplication or disclosure to any third party is prohibited unless otherwise provided for in writing. © 2013 Dynasafe and/or its affiliates. All rights reserved.

MADE BY:	TITLE			
Hdd	Blue Grass – SDC 1200 C Pipe & Instrument Diagram Instrument Air 6 bar			
DATE: 11-12-2013				
CHECKED BY: –	DWG.STATUS: –	VIEW TYPE: –	WEIGHT: –	SCALE: –
PROJ. NO. 406	FILE NO 406-PID1-072862-A	DRAWING NUMBER 072862	SIZE A1	REV. C

This document has been reviewed for ITAR/EAR and no ITAR/EAR sensitive information was found.

24915-070-V11-M000-00043

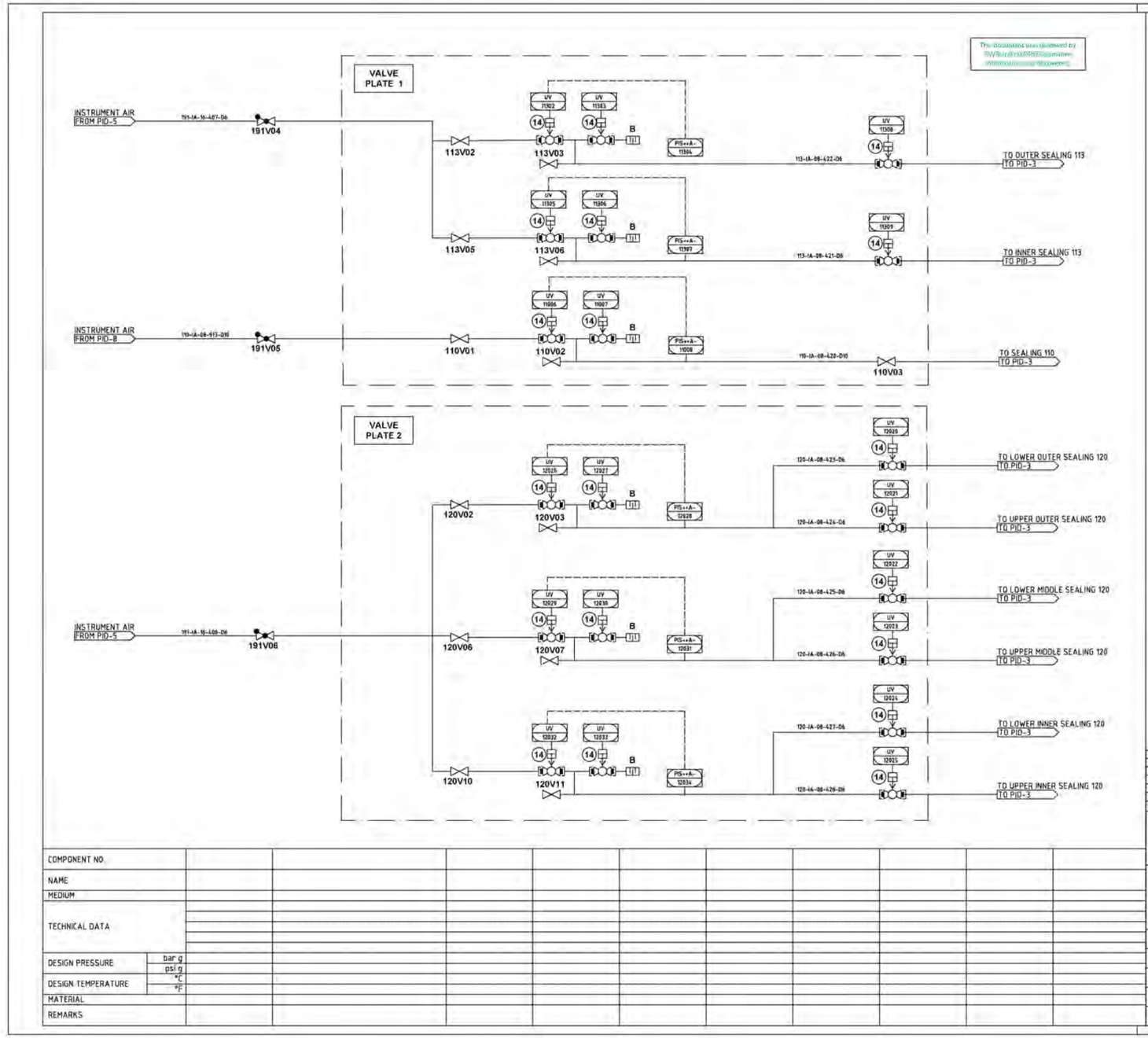

REMARKS

(14) IA LINE NOT SHOWN ON PID-6 FOR CLARITY REFERENCE TO PID-8

PRELIMINARY
Issue: 18.02.14

PID-6

REV.	DATE	DESCRIPTION	DRN	CHK	APP
C	18.02.2014	GENERAL REVISION	Hdd	Dnh	Dnh
B	20.01.2014	GENERAL REVISION AND PIPE NUMBERS	Hdd	Dnh	Dnh
A	11.10.2013	FIRST ISSUE	Hdd	Dnh	Dnh

EXPLOSIVE DESTRUCTION TECHNOLOGY (EDT) SYSTEM
BLUE GRASS CHEMICAL AGENT DESTRUCTION PILOT PLANT PROJECT (BGCAPP)
RICHMOND, KENTUCKY 40475
SUBCONTRACT NO. 24915-070-HC1-M000-00001
CONTRACTOR: Bechtel National, Inc. SUBCONTRACTOR: UXB International, Inc.

BECHTEL UXB DYNASAFE

This drawing is property of Dynasafe Environmental Systems. All rights reserved. Unauthorized disclosure to any third party, in whole or in part, is prohibited.
© 2013 Dynasafe Environmental Systems

MADE BY: Hdd	TITLE: Blue Grass – SDC 1200 C Pipe & Instrument Diagram Instrument Air 15 bar		
DATE: 11-12-2013			
CHECKED BY: -	DWG STATUS: -	VIEW TYPE: -	WEIGHT: -
PROJ. NO: 405	FILE NO: 405-PID1-072863-A	DRAWING NUMBER: 072863	SIZE: A1
			SCALE: -
			REV: C

COMPONENT NO.										
NAME										
MEDIUM										
TECHNICAL DATA										
DESIGN PRESSURE	bar g									
	psi g									
DESIGN TEMPERATURE	°C									
	°F									
MATERIAL										
REMARKS										

1

This document has been reviewed for ITAR/EAR and no ITAR/EAR sensitive information was found.

24915-07G-V11-M000-00044

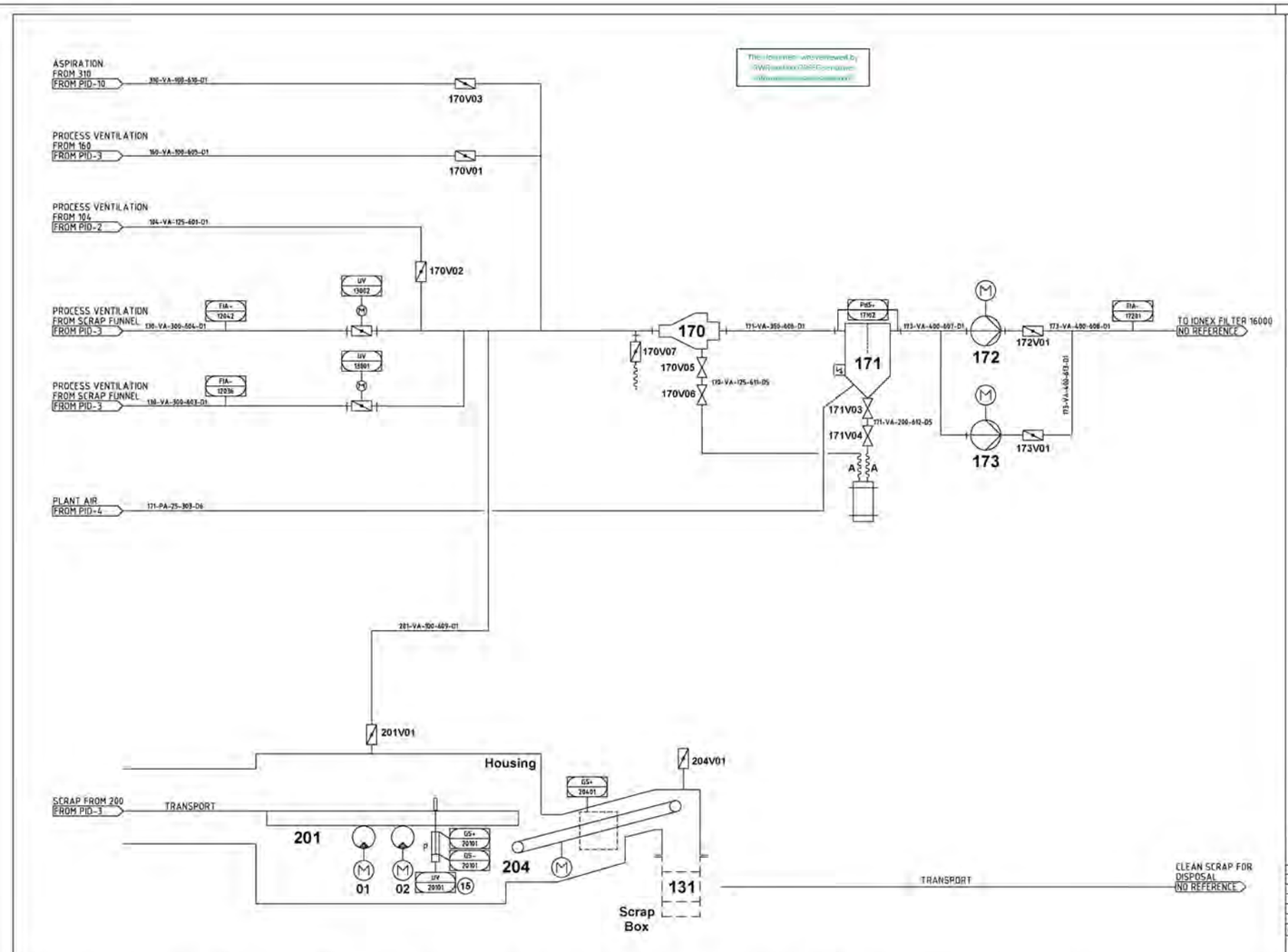

REMARKS

(15) IA LINE NOT SHOWN ON PID-7 FOR CLARITY REFERENCE TO PID-8

COMPONENTS:

170	PROCESS VENTILATION CYCLONE
171	PROCESS VENTILATION FILTER
172	PROCESS VENTILATION FAN 1
173	PROCESS VENTILATION FAN 2
201	SCRAP CONVEYOR 1
204	SCRAP INPECTION CONVEYOR
131	SCRAP BOX

COMPONENT NO.		170	171	172	173	201	204	131
NAME		PROCESS VENTILATION CYCLONE	PROCESS VENTILATION FILTER	PROCESS VENTILATION FAN 1	PROCESS VENTILATION FAN 2	SCRAP CONVEYOR 1	SCRAP INPECTION CONVEYOR	SCRAP BOX
MEDIUM		Cyclone	Filter	Fan	Fan	Vibrating conveyor	Belt conveyor	Scrap Box
TECHNICAL DATA		9000 m³/h	9000 m³/h	22 kW	22 kW	2 x 5.7 kW	1,1 kW	-
		5300 ft³/min	5300 ft³/min	30 hp	30 hp	2 x 7.6 hp	1,5 hp	-
		-	-	9000 m³/h	9000 m³/h	-	-	-
		-	-	5300 ft³/min	5300 ft³/min	-	-	-
		-	-	-	-	-	-	-
DESIGN PRESSURE	bar g	-	-	4500 Pa	4500 Pa	-	-	-
	psi g	-	-	0,65	0,65	-	-	-
DESIGN TEMPERATURE	°C	-	-	-	-	-	-	-
	°F	-	-	-	-	-	-	-
MATERIAL		Mild steel	Mild steel	Mild steel	Mild steel	Mild steel	Mild steel	Mild steel
REMARKS		-	-	-	-	-	-	To be submitted

PRELIMINARY
Issue: 18.02.14

PID-7

REV.	DATE	DESCRIPTION	DRN	CHK	APP
C	18.02.2014	GENERAL REVISION	Hdd	Onh	Onh
B	29.01.2014	GENERAL REVISION AND PIPE NUMBERS	Hdd	Onh	Dbh
A	11.12.2013	FIRST ISSUE	Hdd	Onh	Dbh

EXPLOSIVE DESTRUCTION TECHNOLOGY (EDT) SYSTEM
BLUE GRASS CHEMICAL AGENT DESTRUCTION PILOT PLANT PROJECT (BGCAPP)
RICHMOND, KENTUCKY 40475
SUBCONTRACT NO. 24915-DS-HC1-M000-00001
CONTRACTOR: Bechtel National, Inc. SUBCONTRACTOR: UXB International Inc.

This drawing is property of Dynasafe. Does not contain AB and must not be reproduced, published or used without written permission. ©2013 Dynasafe Switzerland

MADE BY	TITLE
Hdd	Blue Grass – SDC 1200 C Pipe & Instrument Diagram Scrap Inspection and Process Ventilation
DATE	
11-12-2013	

CHECKED BY	DWG STATUS	VIEW TYPE	WEIGHT	SCALE
-	-	-	-	-

PROJ. NO.	FILE NO.	DRAWING NUMBER	SIZE	REV.
406	406-PID1-072864-A	072864	A1	C

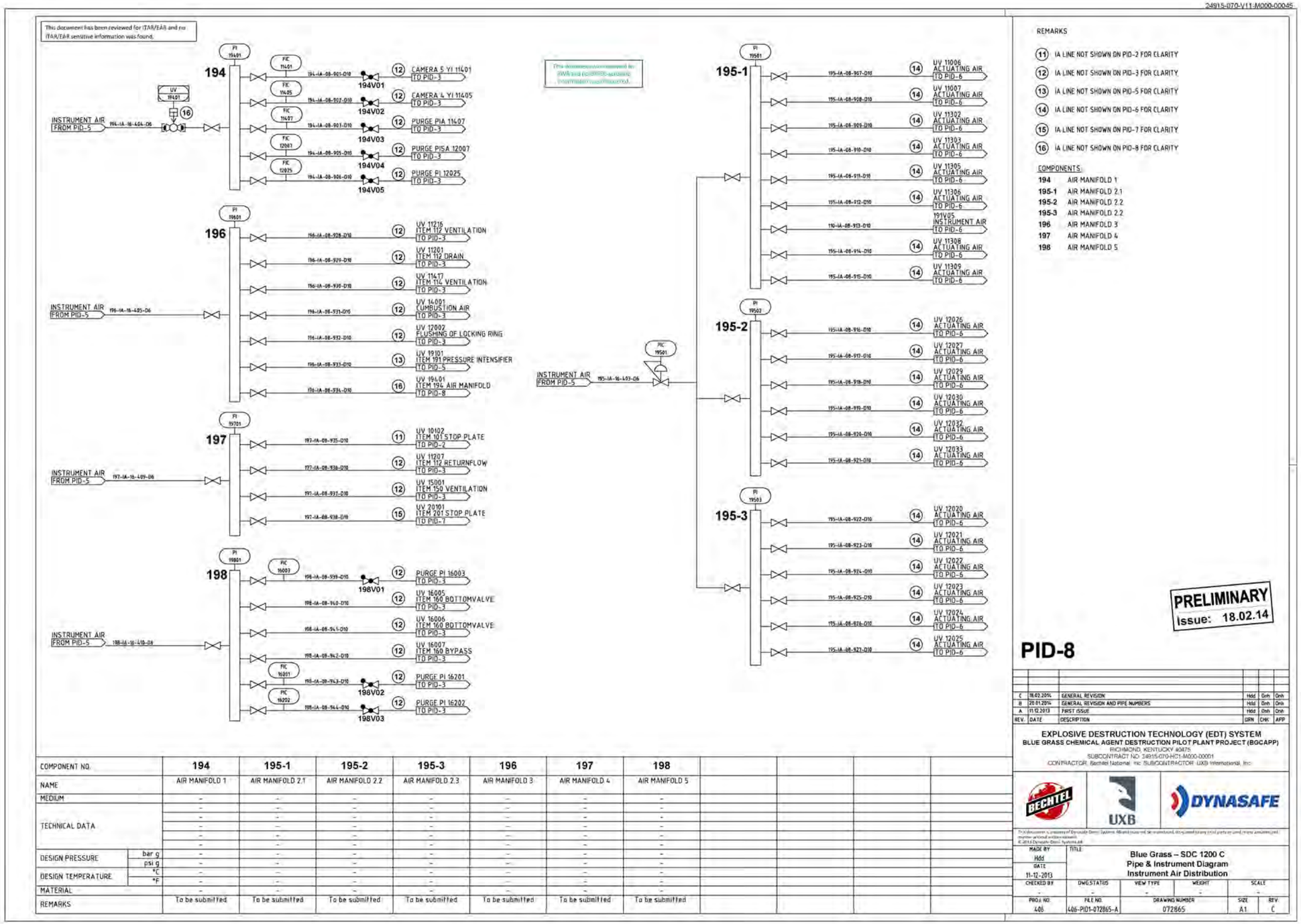

COMPONENT NO.		194	195-1	195-2	195-3	196	197	198
NAME		AIR MANIFOLD 1	AIR MANIFOLD 2.1	AIR MANIFOLD 2.2	AIR MANIFOLD 2.3	AIR MANIFOLD 3	AIR MANIFOLD 4	AIR MANIFOLD 5
MEDIUM		-	-	-	-	-	-	-
TECHNICAL DATA		-	-	-	-	-	-	-
		-	-	-	-	-	-	-
		-	-	-	-	-	-	-
		-	-	-	-	-	-	-
		-	-	-	-	-	-	-
DESIGN PRESSURE	bar g	-	-	-	-	-	-	-
	psi g	-	-	-	-	-	-	-
DESIGN TEMPERATURE	°C	-	-	-	-	-	-	-
	°F	-	-	-	-	-	-	-
MATERIAL		-	-	-	-	-	-	-
REMARKS		To be submitted	To be submitted	To be submitted	To be submitted	To be submitted	To be submitted	To be submitted

1

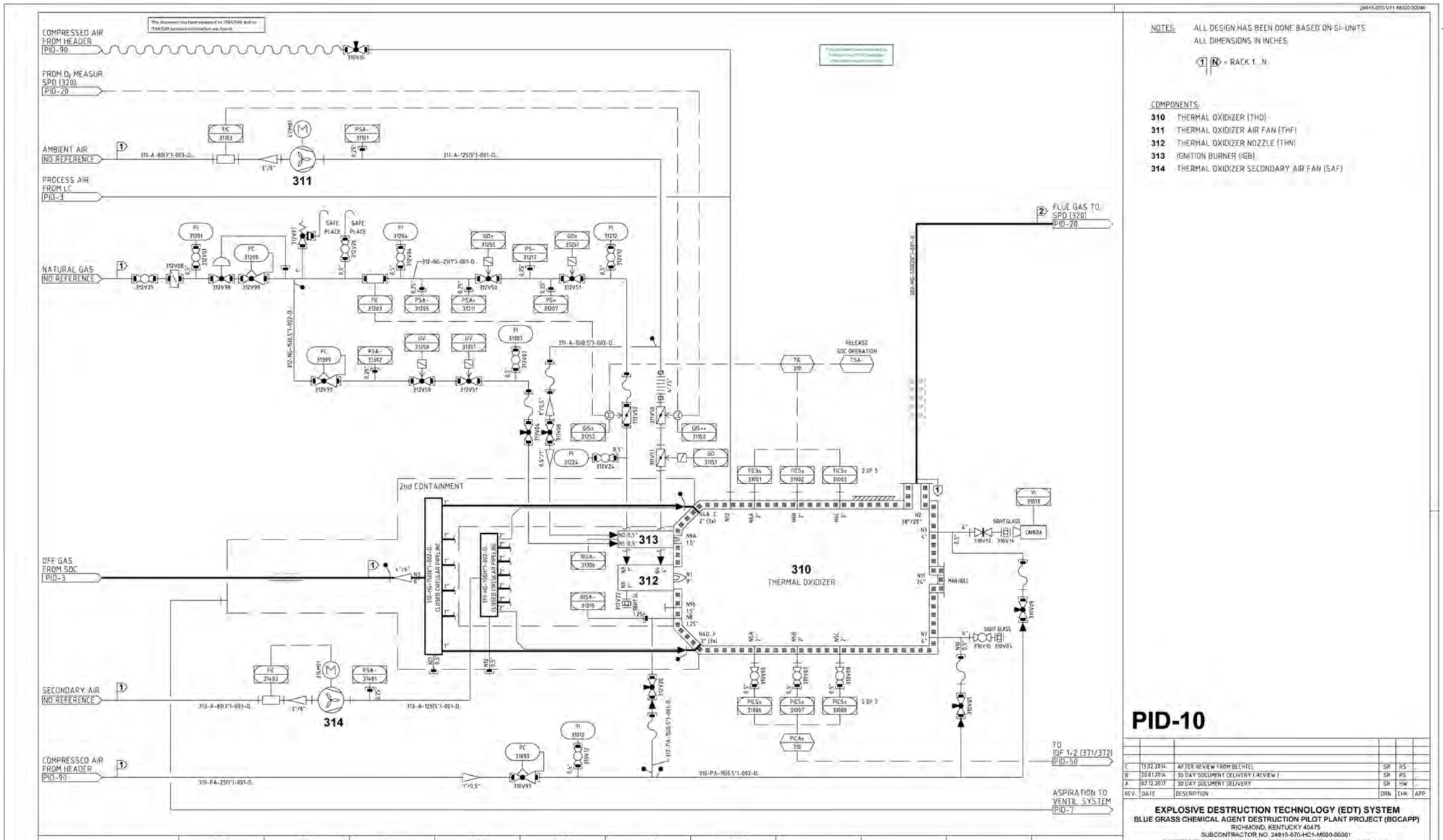

NOTES: ALL DESIGN HAS BEEN DONE BASED ON SI-UNITS
ALL DIMENSIONS IN INCHES

(1) (N) = RACK 1...N

COMPONENTS:

310 THERMAL OXIDIZER (THO)
311 THERMAL OXIDIZER AIR FAN (THF)
312 THERMAL OXIDIZER NOZZLE (THN)
313 IGNITION BURNER (IGB)
314 THERMAL OXIDIZER SECONDARY AIR FAN (SAF)

COMPONENT NO.		310	311	311M01	312	313	314	314M01
NAME		THERMAL OXIDIZER	THERMAL OXIDIZER AIR FAN	THO – AIR FAN MOTOR	THERMAL OXIDIZER NOZZLE	IGNITION BURNER	THERMAL OXIDIZER SECONDARY AIR FAN	THO - SECONDARY AIR FAN – MOTOR
MEDIUM		OFF GAS	AIR		NATURAL GAS, AIR		AIR	
TECHNICAL DATA	Nm^3/h	600	700		100		700	
	scf/m	375	412		59		412	
		APPR. $9m^3$			APPR. Ø8x24"			
	...		1,1 kW (1,48 hp)				1,1 kW (1,48 hp)	
DESIGN PRESSURE	bar g	±0,1	0 / 0,03		0,5 GAS / 0,35 AIR		0 / 0,03	
	psi g	±1,45	0 / 0,435		7,25 GAS / 5,08 AIR		0 / 0,435	
DESIGN TEMPERATURE	°C	1200	60		100		60	
	°F	2192	140		212		140	
MATERIAL		CS/CERAMIC FIBRE	CS		SS		CS	
REMARKS								

PID-10

REV.	DATE	DESCRIPTION	DRN	CHK	APP
C	13.02.2014	AFTER REVIEW FROM BECHTEL	SR	RS	
B	20.01.2014	30 DAY DOCUMENT DELIVERY (REVIEW)	SR	RS	
A	02.12.2013	30 DAY DOCUMENT DELIVERY	SR	HW	

EXPLOSIVE DESTRUCTION TECHNOLOGY (EDT) SYSTEM
BLUE GRASS CHEMICAL AGENT DESTRUCTION PILOT PLANT PROJECT (BGCAPP)
RICHMOND, KENTUCKY 40475
SUBCONTRACTOR NO. 24915-070-HC1-M000-00001
CONTRACTOR: Bechtel National, Inc. SUBCONTRACTOR: UXB International, Inc.

BECHTEL UXB DYNASAFE

This document is property of Dynasafe Group Systems AB and must not be reproduced, distributed to any third party or used in any manner without written consent.
© 2013 Dynasafe Group Systems AB

MADE BY	TITLE				
SR	**Bluegrass – SDC 1200 C Pipe & Instrument Diagram Thermal Oxidizer**				
DATE 02.12.2013					
CHECKED BY RS	DWG STATUS	VIEW TYPE	WEIGHT	SCALE NTS	
PROJ NO. 406	FILE NO. 406-PID-10	DRAWING NUMBER 23-406-582515-PID-10-THO		SIZE A1	REV C

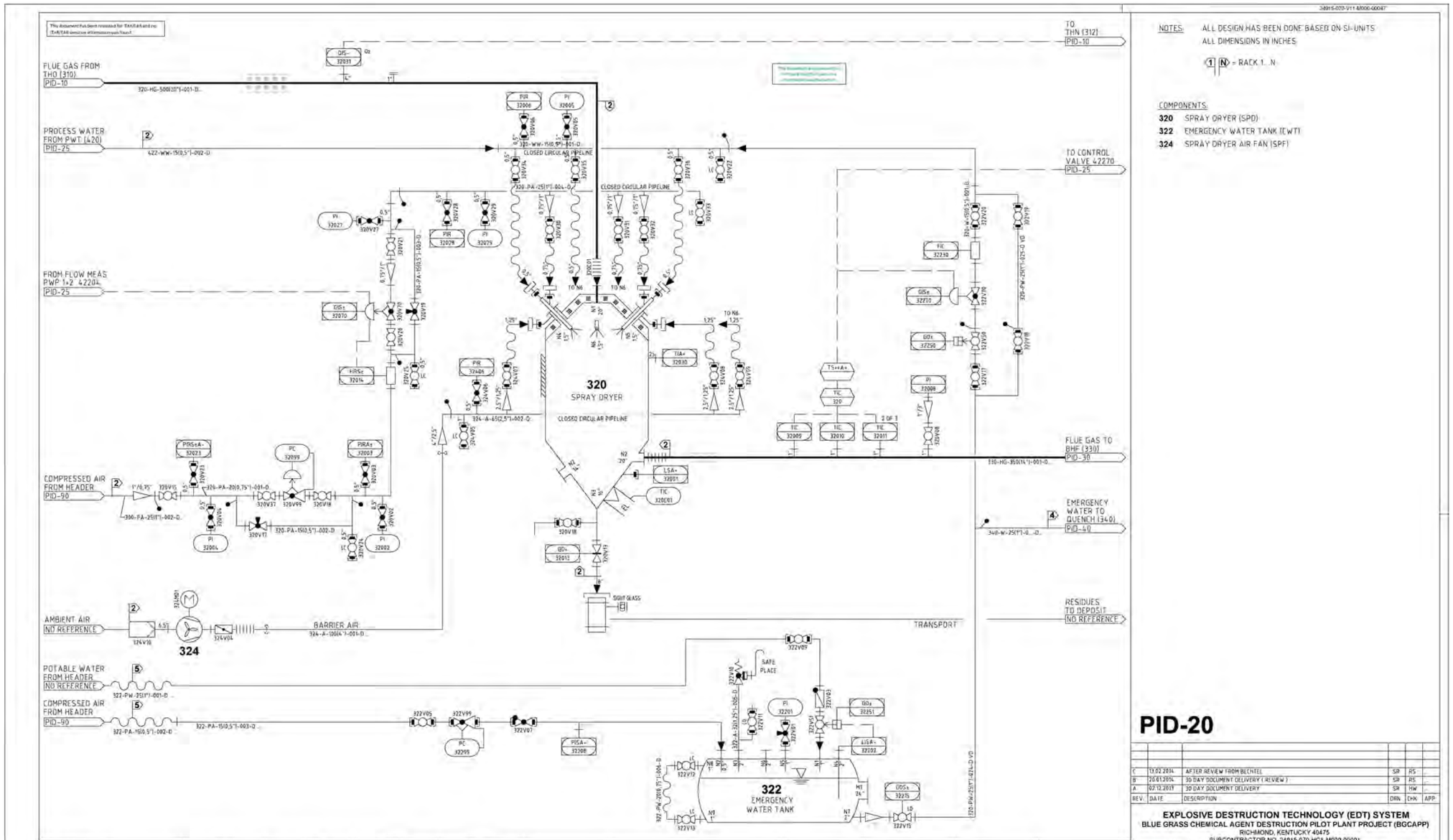

NOTES: ALL DESIGN HAS BEEN DONE BASED ON SI-UNITS
ALL DIMENSIONS IN INCHES

(1) (N) = RACK 1...N

COMPONENTS:

320 SPRAY DRYER (SPD)
322 EMERGENCY WATER TANK (EWT)
324 SPRAY DRYER AIR FAN (SPF)

COMPONENT NO.		320	322	324	324M01
NAME		SPRAY DRYER	EMERGENCY WATER TANK	SPRAY DRYER AIR FAN	SPRAY DRYER AIR FAN – MOTOR
MEDIUM		FLUE GAS	EMERGENCY WATER	AIR	
TECHNICAL DATA			793 gal		
	Nm^3/h	1588		240	
	scf/m	934		141	
				3,0 kW (4,0 hp)	
	l/h				
DESIGN PRESSURE	bar g	±0,1	8	0,06	
	psi g	±1,45	116	0,87	
DESIGN TEMPERATURE	°C	1200 / 400	120	60	
	°F	2192 / 752	248	140	
MATERIAL		CERAM. / 1.4462	CS	CS	
REMARKS		INL.PIPE CS+CERAM.FIB.			

PID-20

REV.	DATE	DESCRIPTION	DRN	CHK	APP
C	13.02.2014	AFTER REVIEW FROM BECHTEL	SR	RS	
B	20.01.2014	30 DAY DOCUMENT DELIVERY (REVIEW)	SR	RS	
A	02.12.2013	30 DAY DOCUMENT DELIVERY	SR	HW	

EXPLOSIVE DESTRUCTION TECHNOLOGY (EDT) SYSTEM
BLUE GRASS CHEMICAL AGENT DESTRUCTION PILOT PLANT PROJECT (BGCAPP)
RICHMOND, KENTUCKY 40475
SUBCONTRACTOR NO. 24915-070-HC1-M000-00001
CONTRACTOR: Bechtel National, Inc. SUBCONTRACTOR: UXB International, Inc.

BECHTEL UXB DYNASAFE

© 2013 Dynasafe Danref Systems AB

MADE BY	TITLE
SR	**Bluegrass – SDC 1200 C**
DATE	**Pipe & Instrument Diagram**
02.12.2013	**Spray Dryer and Emergency Water Tank**

CHECKED BY	DWG STATUS	VIEW TYPE	WEIGHT	SCALE
RS				NTS

PROJ. NO.	FILE NO.	DRAWING NUMBER	SIZE	REV
406	406-PID-20	23-406-582516-PID-20-SPD	A1	C

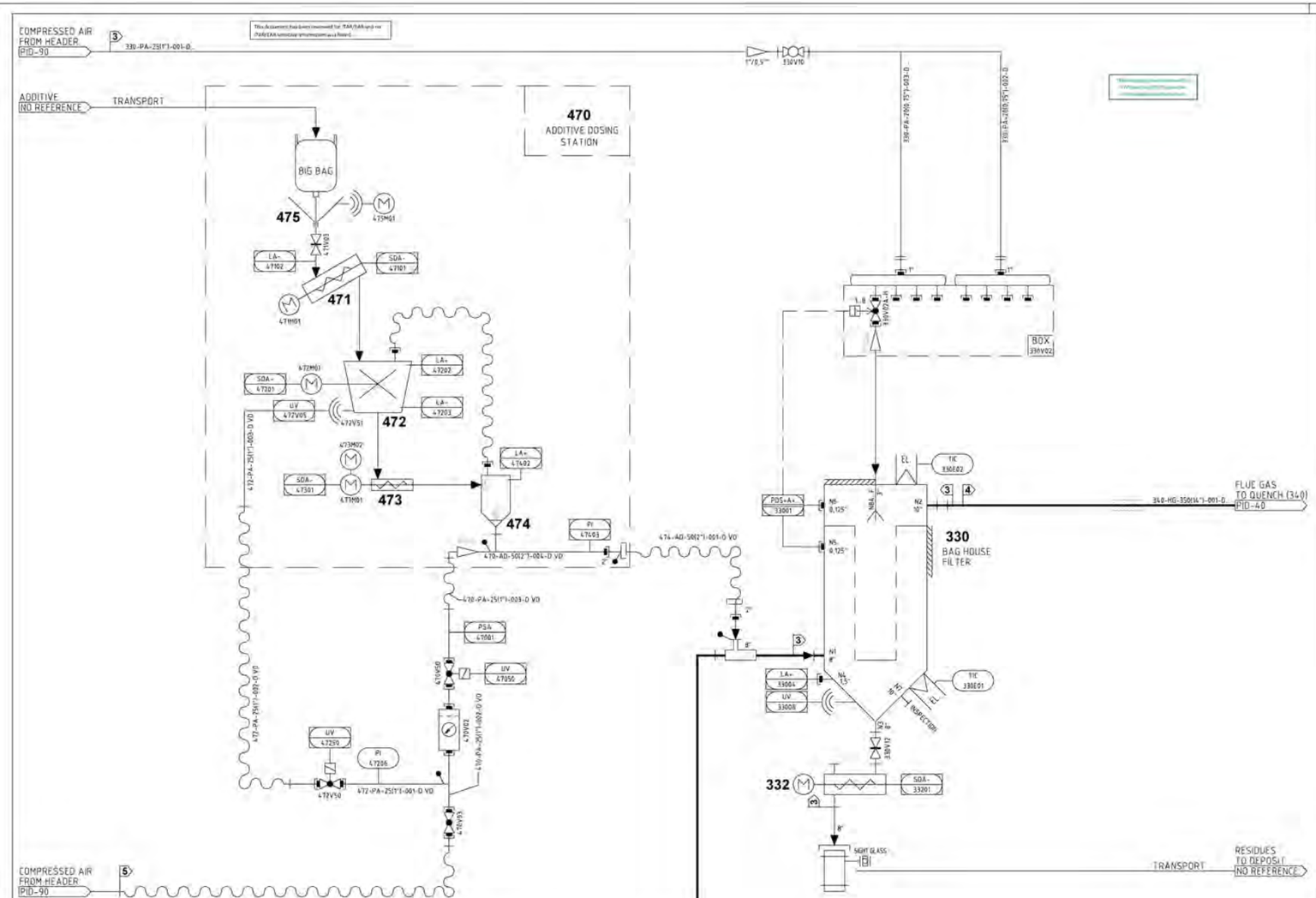

NOTES:
ALL DESIGN HAS BEEN DONE BASED ON SI-UNITS
ALL DIMENSIONS IN INCHES

(1) (N) = RACK 1 : N

COMPONENTS

330	BAG HOUSE FILTER (BHF)
332	BHF SCREW CONVEYOR (BSC)
470	ADDITIVE DOSING STATION (ADS)
471	SCREW CONVEYOR 1 (SCC1)
472	CRUSHING MACHINE (CRM)
473	SCREW CONVEYOR 2 (SEC2))
474	ADDITIVE SENDER (ASE)
475	BIG BAG UNLOADER (BBU)

COMPONENT NO.		330	332	470	471	471M01	472	473	473M01	474	475
NAME		BAG HOUSE FILTER	BHF SCREW CONVEYOR	ADDITIVE DOSING STATION	SCREW CONVEYOR 1	SCREW CONVEYOR 1 MOTOR	CRUSHING MACHINE	SCREW CONVEYOR 2	SCREW CONVEYOR 2 MOTOR	ADDITIVE SENDER	BIG BAG UNLOADER
MEDIUM		FLUE GAS	RESIDUES	ADDITIVE						ADDITIVE	
TECHNICAL DATA										0.015 cf/min	
	Nm^3/h	2750	2 m^3/h	35 kg/h						35 kg/h	
	scf/m	1636	1,2	55 lb/h						55 lb/h	
		APPR. Ø63"	APPR. L:154xW12xH14"	35 cf	Ø114 mm			Ø114 mm			
	l/h		1,5 kW (2 hp)			0,75 kW (1 hp)	2,2 kW (3 hp)		0,55 kW (0,74 hp)		
DESIGN PRESSURE	barg	±0,1								4	
	psi g	±1,45								58	
DESIGN TEMPERATURE	°C	280*	250	100			100	100		100	100
	°F	536*	482	212			212	212		212	212
MATERIAL		CS	CS	CS	SS		SS	SS		CS	CS
REMARKS		*FILTERBAGS									

PID-30

REV.	DATE	DESCRIPTION	DRN	CHK	APP
C	13.02.2014	AFTER REVIEW FROM BECHTEL	SR	RS	
B	20.01.2014	30 DAY DOCUMENT DELIVERY (REVIEW)	SR	RS	
A	02.12.2013	30 DAY DOCUMENT DELIVERY	SR	HW	

EXPLOSIVE DESTRUCTION TECHNOLOGY (EDT) SYSTEM
BLUE GRASS CHEMICAL AGENT DESTRUCTION PILOT PLANT PROJECT (BGCAPP)
RICHMOND, KENTUCKY 40475
SUBCONTRACTOR NO. 24915-070-HC1-M000-00001
CONTRACTOR: Bechtel National, Inc. SUBCONTRACTOR: UXB International, Inc.

This document is property of Dynasafe Client Solutions AB and must not be reproduced, disclosed to any third party or used in any unauthorized manner without written consent.
© 2013 Dynasafe Client Solutions AB

MADE BY	SR
DATE	02.12.2013
CHECKED BY	RS
PROJ. NO.	406

TITLE: **Bluegrass – SDC 1200 C**
Pipe & Instrument Diagram
Additive Dosing Station and Bag House Filter

DWG STATUS	VIEW TYPE	WEIGHT	SCALE
			NTS

FILE NO.	DRAWING NUMBER	SIZE	REV
406-PID-30	23-406-562517-PID-30-BHF	A1	C

This document contained Export Control/International Traffic in Arms Regulations Information.

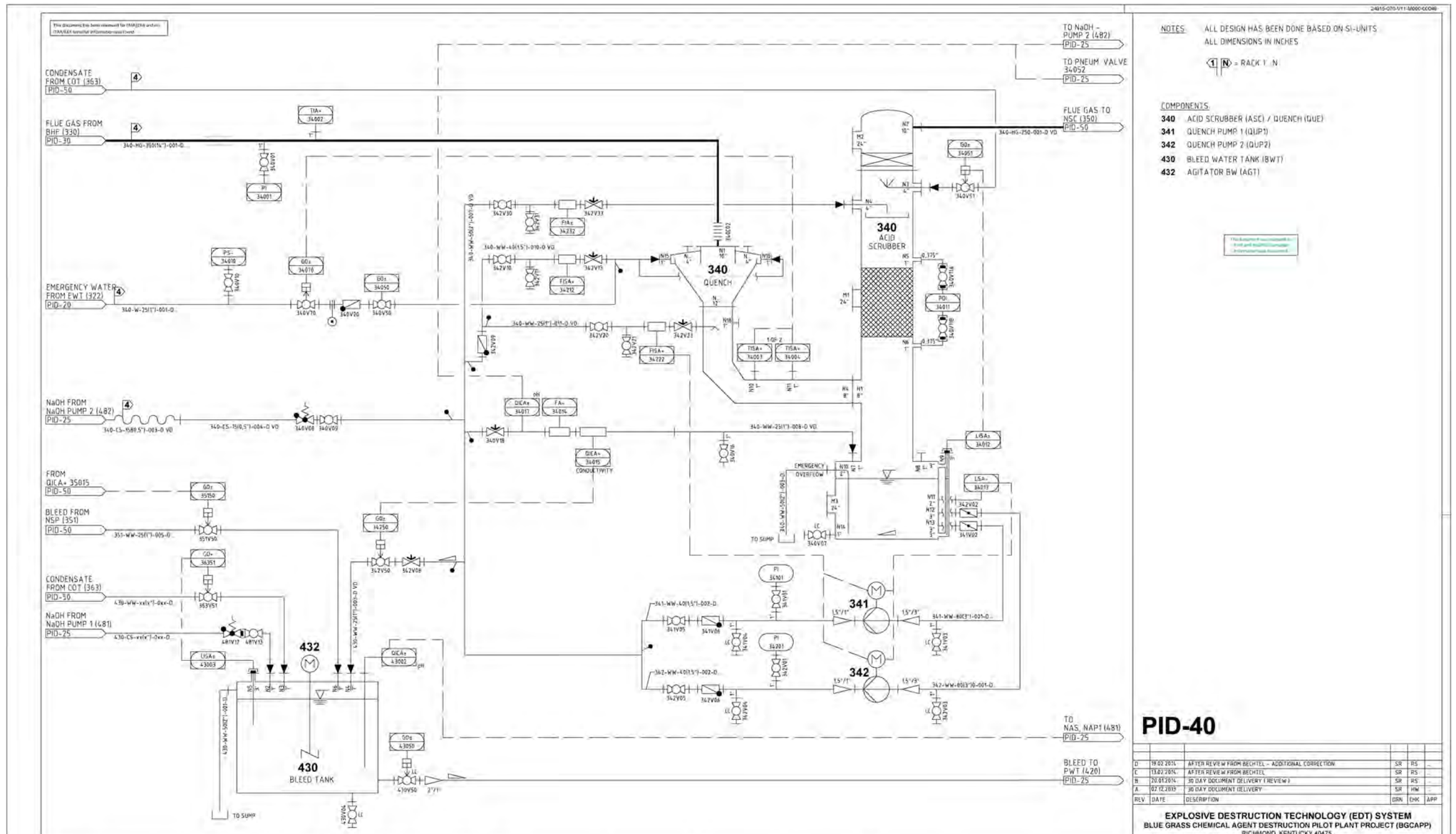

NOTES:
ALL DESIGN HAS BEEN DONE BASED ON SI-UNITS
ALL DIMENSIONS IN INCHES

<1> <N> = RACK 1 ..N

COMPONENTS:
340 ACID SCRUBBER (ASC) / QUENCH (QUE)
341 QUENCH PUMP 1 (QUP1)
342 QUENCH PUMP 2 (QUP2)
430 BLEED WATER TANK (BWT)
432 AGITATOR BW (AGT)

COMPONENT NO.		340	341 + 342	430	432
NAME		QUENCH / ACID SCRUBBER	QUENCH PUMP 1+2	BLEED WATER TANK	AGITATOR BW
MEDIUM		FLUE GAS	ACID CIRCUL. WATER	PROCESS WATER	PROCESS WATER
TECHNICAL DATA		1634 scf/min	66 gal/min	660 gal	
	Nm^3/h	2776	15 m^3/h	2,5 m^3	
	(/h)				
			7,5 kW (10 hp)		1,5 kW (2 hp)
		WATER CIRC. 35 gal/min			
DESIGN PRESSURE	bar g	±0,1	2,8	0	
	psi g	±1,45	40,6		
DESIGN TEMPERATURE	°C	100 / 250	80	100	80
	°F	212 / 482	176	212	176
MATERIAL		HASTELLOY C4/GRP	PE-UHMW	GRP	PVDF / PDFE
REMARKS					

PID-40

REV	DATE	DESCRIPTION	DRN	CHK	APP
D	19.02.2014	AFTER REVIEW FROM BECHTEL – ADDITIONAL CORRECTION	SR	RS	–
C	13.02.2014	AFTER REVIEW FROM BECHTEL	SR	RS	–
B	20.01.2014	30 DAY DOCUMENT DELIVERY (REVIEW)	SR	RS	–
A	02.12.2013	30 DAY DOCUMENT DELIVERY	SR	HW	–

EXPLOSIVE DESTRUCTION TECHNOLOGY (EDT) SYSTEM
BLUE GRASS CHEMICAL AGENT DESTRUCTION PILOT PLANT PROJECT (BGCAPP)
RICHMOND, KENTUCKY 40475
SUBCONTRACTOR NO. 24915-070-HC1-M000-00001
CONTRACTOR: Bechtel National, Inc. SUBCONTRACTOR: UXB International, Inc.

This document is property of Dynasafe Danish Systems A/S and must not be reproduced, disclosed to any third party or used in any unauthorized manner without written consent.
© 2013 Dynasafe Danish Systems A/S

MADE BY: SR	TITLE: **Bluegrass – SDC 1200 C Pipe & Instrument Diagram Quench and Acid Scrubber**	
DATE: 02.12.2013		
CHECKED BY: RS	DWG.STATUS	VIEW TYPE / WEIGHT / SCALE: N.T.S
PROJ. NO: 406	FILE NO: 406-PID-40	DRAWING NUMBER: 23-406-582518-PID-40-DUE / SIZE: A1 / REV: D

This document contained Export Control/International Traffic in Arms Regulations Information.

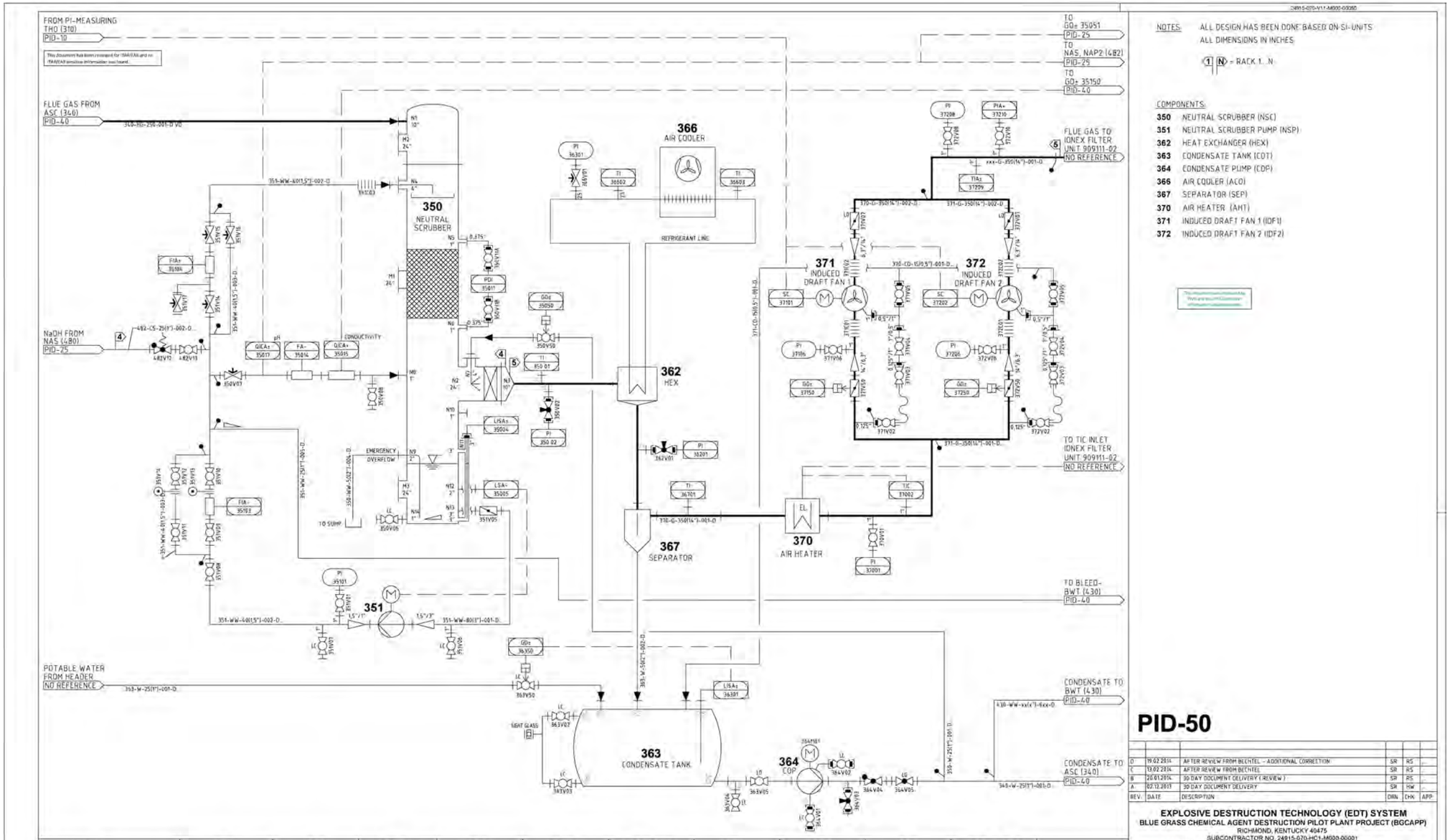

COMPONENT NO.		350	351	362	363	364	364M01	366	367	370	371 + 372
NAME		NEUTRAL SCRUBBER	NEUTRAL SCRUBBER PUMP	HEAT EXCHANGER	CONDENSATE TANK	CONDENSATE PUMP	CONDENSATE PUMP MOTOR 1	AIR COOLER	SEPARATOR	AIR HEATER	INDUCED DRAFT FAN 1 + 2
MEDIUM		FLUE GAS	NEUTR. CIRCUL. WATER	GAS / WATER	WATER	WATER			GAS / WATER	FLUE GAS	FLUE GAS
TECHNICAL DATA		1634 scf/min	66 gal/min	1648 scf/m		6,6 gal/min			1593 scf/m	1304 scf/min	1648 scf/min
	Nm³/h	2776	15 m³/h	2800		1,5 m³/h			2707	2217	2800
	...	...	...	...	APPR. 800 gal	...				APPR. L20"	
			7,5 kW (10 hp)	5,0 kW (6,7 hp)		2,2 kW (3 hp)		5,0 kW (6,7 hp)		7,5 kW (10 hp)	30 kW (40 hp)
		WATER CIRC. 44gal/min									
DESIGN PRESSURE	bar g	±0,1	2,8	±0,1	±0,1			1,5	±0,1	±0,1	-0,1 / +0,01
	psi g	±1,45	40,6	±1,45	±1,45			21,8	±1,45	±1,45	-1,45 / +0,145
DESIGN TEMPERATURE	°C	100	80	80	100			80	100	100	150
	°F	212	176	176	212			176	212	212	
MATERIAL		GRP	PE-UHMW	GRP / SS	GRP	PE-UHMW			GRP	CS COATED	CS COATED
REMARKS											IMPELLER HASTELL. C4

PID-50

REV.	DATE	DESCRIPTION	DRN	CHK	APP
D	19.02.2014	AFTER REVIEW FROM BECHTEL – ADDITIONAL CORRECTION	SR	RS	
C	13.02.2014	AFTER REVIEW FROM BECHTEL	SR	RS	
B	20.01.2014	30 DAY DOCUMENT DELIVERY (REVIEW)	SR	RS	
A	02.12.2013	30 DAY DOCUMENT DELIVERY	SR	HW	

EXPLOSIVE DESTRUCTION TECHNOLOGY (EDT) SYSTEM
BLUE GRASS CHEMICAL AGENT DESTRUCTION PILOT PLANT PROJECT (BGCAPP)
RICHMOND, KENTUCKY 40475
SUBCONTRACTOR NO. 24915-070-HC1-M000-00001
CONTRACTOR: Bechtel National, Inc. SUBCONTRACTOR: UXB International, Inc.

BECHTEL UXB DYNASAFE

This document is property of Dynasafe (Int'l) Systems AB and must not be reproduced, de-classified in any form, part or content in any manner whatsoever without written consent.
© 2013 Dynasafe (Int'l) Systems AB

MADE BY	SR
DATE	02.12.2013
CHECKED BY	RS
PROJ. NO.	406

TITLE: **Bluegrass – SDC 1200 C**
Pipe & Instrument Diagram
Neutral Scrubber, Induced Draft Fans and EMI

DWG STATUS	VIEW TYPE	WEIGHT	SCALE
			NTS

FILE NO.	DRAWING NUMBER	SIZE	REV
406-PID-50	23-406-582519-PID-50-NSC	A1	D

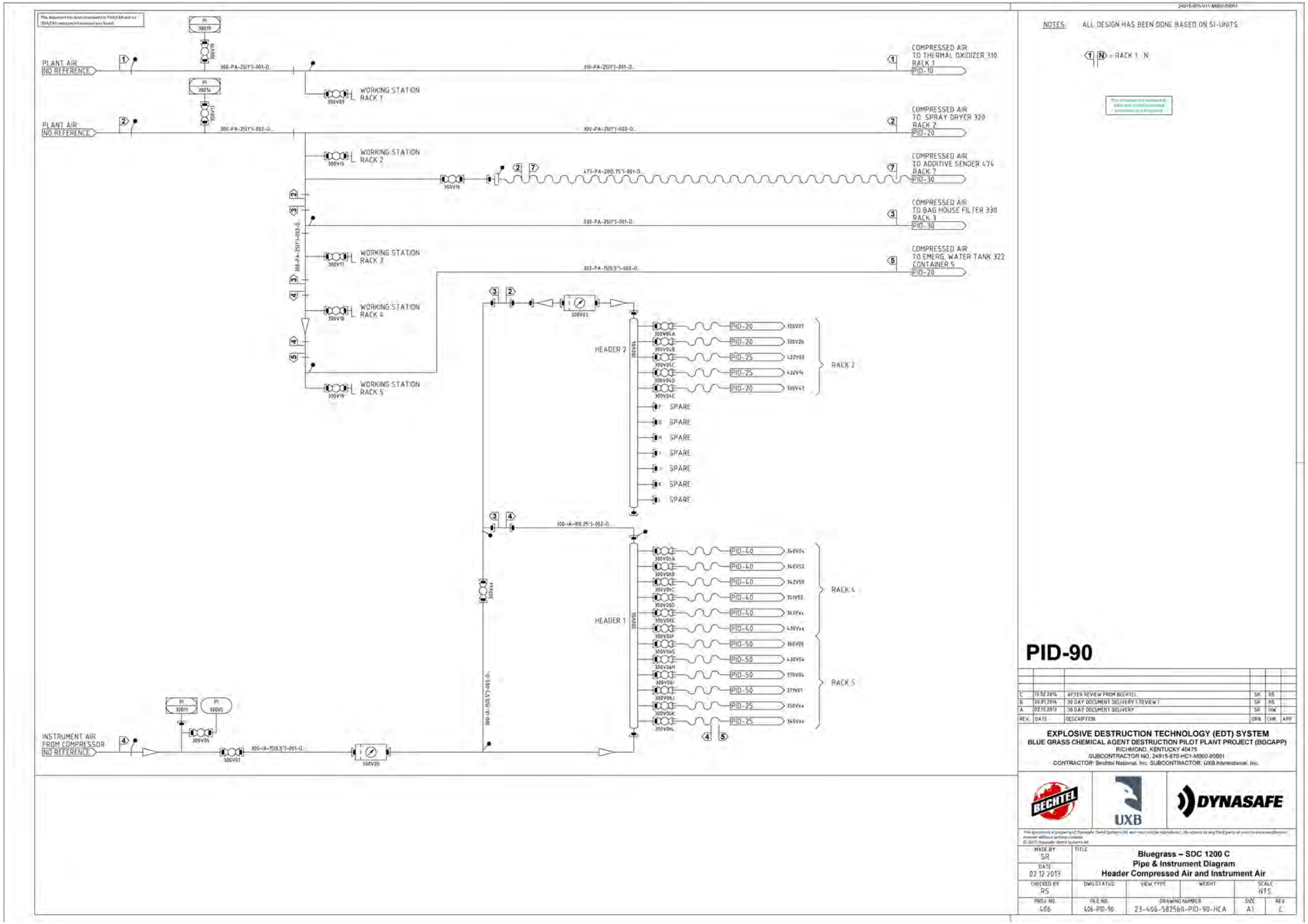
PLANT AIR NO REFERENCE
INSTRUMENT AIR FROM COMPRESSOR NO REFERENCE
WORKING STATION RACK 1
WORKING STATION RACK 2
WORKING STATION RACK 3
WORKING STATION RACK 4
WORKING STATION RACK 5
COMPRESSED AIR TO THERMAL OXIDIZER 310 RACK 1 PID-10
COMPRESSED AIR TO SPRAY DRYER 320 RACK 2 PID-20
COMPRESSED AIR TO ADDITIVE SENDER 474 RACK 7 PID-30
COMPRESSED AIR TO BAG HOUSE FILTER 330 RACK 3 PID-30
COMPRESSED AIR TO EMERG. WATER TANK 322 CONTAINER 5 PID-20
HEADER 2
HEADER 1
SPARE
RACK 2
RACK 4
RACK 5
NOTES: ALL DESIGN HAS BEEN DONE BASED ON SI-UNITS
PID-90
EXPLOSIVE DESTRUCTION TECHNOLOGY (EDT) SYSTEM
BLUE GRASS CHEMICAL AGENT DESTRUCTION PILOT PLANT PROJECT (BGCAPP)
RICHMOND, KENTUCKY 40475
SUBCONTRACTOR NO. 24915-070-HC1-M000-00001
CONTRACTOR: Bechtel National, Inc. SUBCONTRACTOR: UXB International, Inc.
C 13.02.2014 AFTER REVIEW FROM BECHTEL SR RS
B 20.01.2014 30 DAY DOCUMENT DELIVERY (REVIEW) SR RS
A 02.12.2013 30 DAY DOCUMENT DELIVERY SR HW
MADE BY SR
DATE 02.12.2013
CHECKED BY RS
PROJ. NO. 406
FILE NO. 406-PID-90
DRAWING NUMBER 23-406-582560-PID-90-HEA
SIZE A1
REV. E
Bluegrass – SDC 1200 C
Pipe & Instrument Diagram
Header Compressed Air and Instrument Air

This document contained Export Control/International Traffic in Arms Regulations Information.

24915-70-GPE-GGPT-00001 – Class 3 Hazardous Waste Storage & Treatment Permit Modification Request, Addition of Explosive Destruction Technology (EDT) (CDRL A010)

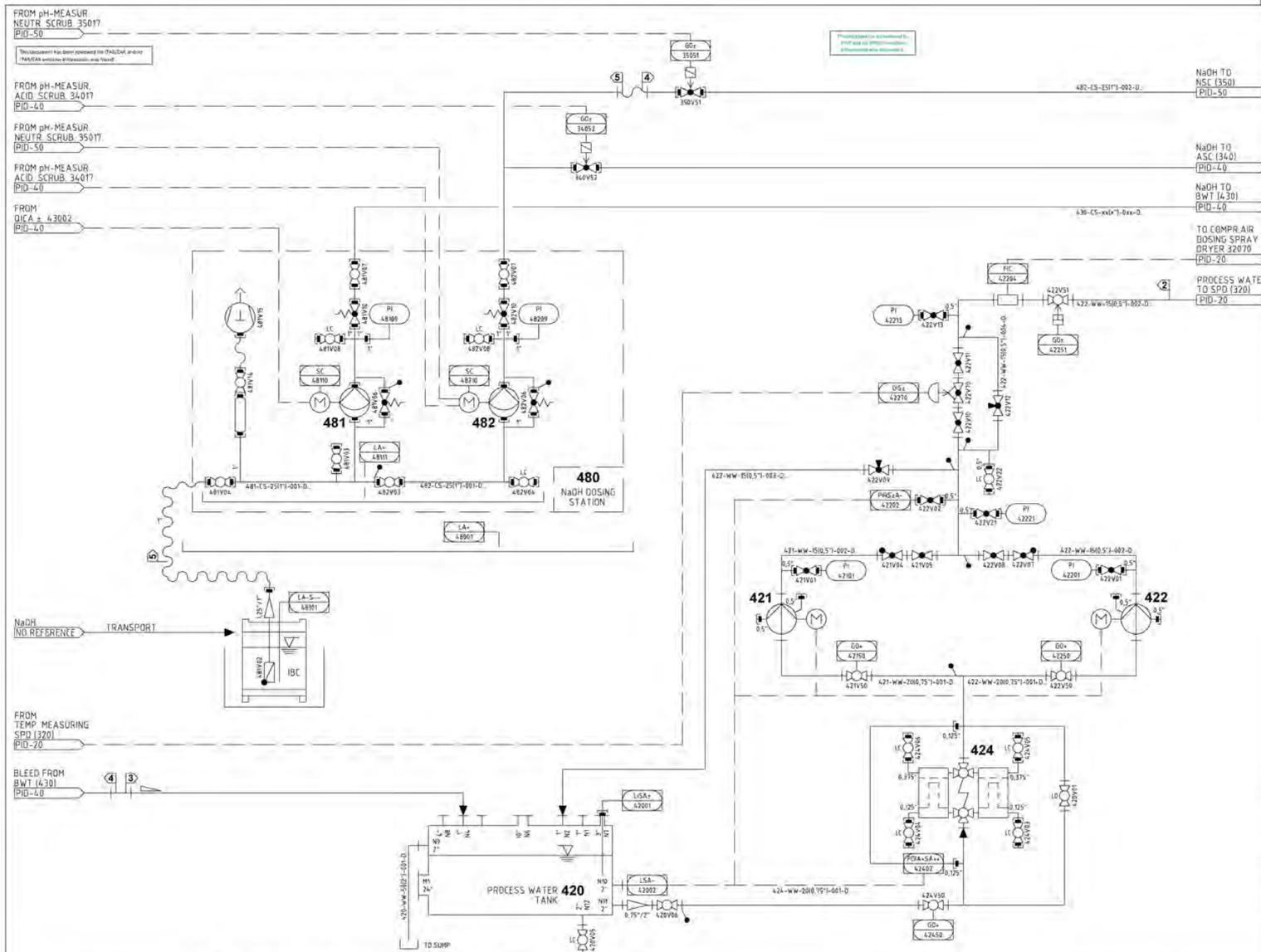

NOTES: ALL DESIGN HAS BEEN DONE BASED ON SI-UNITS
ALL DIMENSIONS IN INCHES

1 N = RACK 1 N

COMPONENTS

420	PROCESS WATER TANK (PWT)
421	PROCESS WATER PUMP 1 (PWP1)
422	PROCESS WATER PUMP 2 (PWP2)
424	PROCESS WATER FILTER (PWF)
480	NaOH DOSING STATION (NAS)
481	NaOH PUMP 1 (NAP1)
482	NaOH PUMP 2 (NAP2)

PID-25

REV.	DATE	DESCRIPTION	DRN	CHK	APP
C	13.02.2014	AFTER REVIEW FROM BECHTEL	SR	RS	
B	20.01.2014	30 DAY DOCUMENT DELIVERY (REVIEW)	SR	RS	
A	02.12.2013	30 DAY DOCUMENT DELIVERY	SR	HW	

EXPLOSIVE DESTRUCTION TECHNOLOGY (EDT) SYSTEM
BLUE GRASS CHEMICAL AGENT DESTRUCTION PILOT PLANT PROJECT (BGCAPP)
RICHMOND, KENTUCKY 40475
SUBCONTRACTOR NO. 24915-070-HC1-M000-00001
CONTRACTOR: Bechtel National, Inc. SUBCONTRACTOR: UXB International, Inc.

BECHTEL UXB DYNASAFE

This document is property of Dynasafe Detroit Systems AB and must not be reproduced, disclosed to any third party or used by any possible or any other without written consent.
© 2013 Dynasafe Detroit Systems AB

MADE BY SR	TITLE Bluegrass – SDC 1200 C Pipe & Instrument Diagram Process Water Tank and NaOH Dosing Station					
DATE 02.12.2013						
CHECKED BY RS	DWG.STATUS	VIEW TYPE	WEIGHT	SCALE NTS		
PROJ. NO. 406	FILE NO. 406-PID-25	DRAWING NUMBER 23-406-582599-PID-25-PWT		SIZE A1	REV C	

COMPONENT NO.		420	421 + 422	424	480	481 + 482
NAME		PROCESS WATER TANK	PROCESS WATER PUMP 1+2	PROCESS WATER FILTER	NaOH DOSING STATION	NaOH PUMP 1+2
MEDIUM		PROCESS WATER	PROCESS WATER	PROCESS WATER	NaOH (25%)	NaOH (25%)
TECHNICAL DATA		793 gal	4,4 gal/min	MESH WIDTH 0,01"		0-1,32 gal/min
	Nm^3/h					
	l/h		1000			0-300
		APPR. 3,0 m^3	APPR. H30xL10"	APPR. L9,5xW6xH10"	APPR. L47xW40xH47"	
			1,5kW (2 hp)			0,33 kW (0,5 hp)
DESIGN PRESSURE	bar g	±0,1	12	1	3	10
	psi g	±1,45	174	14,5	43	145
DESIGN TEMPERATURE	°C	100	100	100	70	70
	°F	212	212	212	158	158
MATERIAL		GRP	AISI 316	GGG40 / SS	PE	PVC/SS
REMARKS						

1

This document contained Export Control/International Traffic in Arms Regulations Information.

Appendix D-3: **GEKA Facility, Munster, Germany -- Static Detonation Chamber Testing Using a Dynasafe SDC 2000** Final Report

SDC Emissions Report, Final, Prepared by UXB International, Inc., December 2006

This document was reviewed by RWR and no OPSEC-sensitive information was discovered.

This document contained Export Control/ International Traffic in Arms Regulations Information.

Static Detonation Chamber Testing Using a Dynasafe SDC 2000
Final Report

Prepared for:

Washington Group International, Inc.
7800 E. Union Ave. Suite 100
Denver, CO 80237
Attention: Tom Davidson

Under Subcontract Number:

27150-7002, Amendment 1

For The:

Blue Grass Chemical Agent Pilot Plant (BGCAPP)
301 Highland Park Drive
Richmond, KY 40475

Prepared By:

UXB International Inc.
2020 Kraft Drive, Suite 2100
Blacksburg, VA 24060
Phone: (540) 443-3700
FAX: (540) 443-3790

December 31, 2006

This document contained Export Control/
International Traffic in Arms Regulations
Information.

Table of Contents

1 Executive Summary 1
2 Description of the SDC 1
2.1 Detailed Description 2
3 Operating Configuration 12
3.1 HD Configuration 12
3.2 Testing Overview 13
3.3 Detailed Test Descriptions 13
3.4 Propellant and aluminum testing 18
3.5 M55 rocket motor component removal testing 19
3.6 Process Parameters 20
3.7 Photographs, diagrams 20
4 Test Results 21
4.1 Summary 21
4.2 100mm H Mortar testing 21
4.3 Calculation of DE at SP1, SP1a, and SP2 27
4.4 10 cm HD Mortar data 30
4.5 Scrap photos 35
4.6 Propellant and aluminum testing 36
4.7 M55 Rocket Motor Component Removal Testing 43
5 Discussions and Conclusions 56
5.1 Achieved DE 56
5.2 Propellant processing and rocket motor capability 57
6 Appendixes 57
Appendix 1. Test Plans 57
Appendix 2. Sample pump calibration sheets and manual 57
Appendix 3. 150mm HD Mortar x-rays 57
Appendix 4. Calibration Sheets for Flowmeters 58
Appendix 5. DE Calculations 58
Appendix 6. Analytical Report 58

Table of Figures

Figure 2-1: SDC 2000 Cross Section through the Chamber 3
Figure 2-2: Cross Section of an SDC 2000 3
Figure 2-3: Inside of Loading Room, showing Feed Conveyor and Blast Isolation Door 5
Figure 2-4: Sketch Showing Movements of Munitions within the Feed Conveyor System Inside the SDC Room 6
Figure 2-5: Exit of Feed Elevator to Apron of First Loading Chamber 7
Figure 2-6: First Loading Door Closed and Sealed 8
Figure 2-7: Scrap Bin Enclosure 11
Figure 3-1: Static Detonation Chamber Flow Diagram 14
Figure 3-2: Sampling Points 15
Figure 3-4 Sample setup at SP1a Figure 3-5 Sampling setup at SP2 16
Figure 3-7: Opening of SDC Chamber in Inspection Position 20
Figure 3-8: SDC Chamber with 20 Simulated Open Fin NCRM Sections Loaded 20

This document contained Export Control/
International Traffic in Arms Regulations
Information.

Figure 3-9: Empty SDC After One Dump Cycle (Simulated NCRM with Fins) 20
Figure 4-1: Outside View 31
Figure 4-2: Cutaway View 31
Figure 4-3: X Ray Photograph 32
Figure 4-4: Round Prepared for Processing 32
Figure 4-5: Round Being Prepared 33
Figure 4-6: Treated 10 cm Projectile with Nose Plug Blown Out 36
Figure 4-7: Discharged Scrap in Scrap Bin 36
Figure 4-8: Preparation of the Materials (3rd hour of testing) 39
Figure 4-9: Configuration of the Propellant 40
Figure 4-11: SDC 2000 System 46
Figure 4-12: The Structo Shop Floor 47
Figure 4-13: Inside of SDC 2000 47
Figure 4-14: Inside of SDC 2000 48
Figure 4-15: Feed System/Vessel Mating Joint 48
Figure 4-16: Feed Chute with Fragmentation Plunger 49
Figure 4-17: Feed Elevator Looking Down from Top Level 49
Figure 4-18: Interior of Empty Scrap Bin 50
Figure 4-19: Run 1, SDC with 30 Straight Tubes 50
Figure 4-20: SDC Vessel in Home Position 51
Figure 4-21: Nine Straight Tubes in Scrap Bin after First Rotation 51
Figure 4-22: Bridging After First Rotation in Run 1 52
Figure 4-23: Simulated Rocket Motor Casings with Fins 52
Figure 4-24: Finned Tube being Loaded into SDC Vessel 53
Figure 4-25: SDC Vessel Loaded with 20 Finned Tubes 53
Figure 4-26: Finned Tubes Bridged Across Discharge Chute Funnel 54
Figure 4-27: 20 Finned Tubes Being Lifted in Preparation for Run 3 54
Figure 4-28: Loading the Vessel for Run 3 55
Figure 4-29: SDC Vessel Loaded with All 50 Tubes for Run 3 55
Figure 4-30: Tubes Bridged in Discharge Chute after Run 3, Rotation 1 56
Figure 4-31: 9 Tubes Remaining in Vessel after Run 3, Rotation 1 56

Table of Tables

Table 3-1: Run 1, Testing Schedule 16
Table 3-2: Test 2 Parameter Matrix 17
Table 4-1: Flow Calibration Results 23
Table 4-2: Data for Mortars Fed 10/24/2006 33
Table 4-3: Mortars Fed 10/26/06 34
Table 4-4: Mortars Fed 10/27/06 35
Table 4-5: Propellant Testing Parameters 37
Table 4-6: Configuration of Individual Boxes 41
Table 4-7: Average Operating Parameters 43
Table 4-8: Test Data Summary 46

This document contained Export Control/
International Traffic in Arms Regulations
Information.

Appendices

Appendix 1. Test Plans

Appendix 2. Sample pump calibration sheets and manual

Appendix 3. 150mm HD Mortar x-rays

Appendix 4. Calibration Sheets for Flowmeters

Appendix 5. DE Calculations

Appendix 6. Analytical Report

Acronyms List – To Be Added for Final

BGAD ..... Blue Grass Army Depot

BGCAPP ..... Blue Grass Chemical-Agent Destruction Pilot Plant

CO ..... Carbon Monoxide

CO_2 ..... Carbon Dioxide

DE ..... Destruction Efficiency

EPA ..... Environmental Protection Agency

GEKA ..... Gesellschatt z. Entsorgung Chem. Kampfstoffe u. Rustungs-Altlasen mbH

H_2O ..... Water

HCl ..... Hydrochloric Acid

HD ..... Mustard Agent (Sulfur) distilled

ID ..... Identification

NCRM ..... Non-Contaminated Rocket Motors

NO_X ..... Nitrogen Oxides

O_2 ..... Oxygen

PAS ..... Pollution Abatement System

SCC ..... Secondary Combustion Chamber

SDC ..... Static Detonation Chamber

SO_2 ..... Sulfur Dioxide

This document contained Export Control/
International Traffic in Arms Regulations
Information.

SO_3 ..... Sulfur Trioxide

TNT ..... Trinitro Toluene

UXB ..... UXB International, Inc.

This document contained Export Control/
International Traffic in Arms Regulations
Information.

1 Executive Summary

This report describes the effort to develop and implement a test plan and testing to determine if a Dynasafe Static Detonation Chamber (SDC) is a beneficial addition to the Blue Grass Chemical-Agent Destruction Pilot Plant (BGCAPP) project. The testing was performed at a site in Münster, Germany, owned by GEKA (Gesellschaft z. Entsorgung chem. Kampfstoffe u. Rüstungs-Altlasten mbH) which currently has an operating SDC processing H, HD, Clark I, Clark II, Phosgine and other chemical munitions, and other miscellaneous munitions and explosive components. GEKA is a German Federally chartered company that works under contract for the German Federal Government, destroying all German chemical warfare agents and contaminated military waste[1]. The main objective of the testing was to determine if the SDC can achieve a 99.9999% Destruction Efficiency (DE)[2] and satisfy the requirements of the State of Kentucky while processing mustard chemical weapons[3]. A second objective of the testing included determining the operational ability of the SDC to process non-contaminated M67 rocket motors separated from M55 rockets.

The testing was successful in that the ability to achieve greater than 99.9999% DE was demonstrated using the system (actual DE was greater than 99.999999989%[4]) processing HD filled explosively configured WW II era 150mm German chemical mortars. The ability to process M55 rocket motors (the M67 motor section from the M55 rocket) was also demonstrated by two separate tests where propellant similar to that used in the M67 motor (double base extruded propellant) was processed, and motor cases similar in dimension to the M67 cases were successfully removed from the chamber.

2 Description of the SDC

The SDC 2000 system is a totally enclosed, gas tight system used for the destruction of chemical or conventional munitions which are either explosively or non-explosively configured. The SDC2000 does not require the use of explosive donor or counter charges to destroy munitions. This reduces the risk of accidental explosions and unexpected environmental release. The system is very flexible and can also decontaminate equipment, scrap, or soil.

The unit is able to handle chemical warfare agents, explosives, propellants, projectiles, mines, and rockets. Changes in munition feeds do not require reconfiguration of the system, and the system can handle mixed feeds. If a round contains smokes, illumination mixtures, WP, or a fuze, these are destroyed at the same time that the explosive is

[1] http://www.geka-munster.de/Seiten-engl/wirueberuns/diegeka-index.html
[2] A requirement from Kentucky Administrative Regulation KAR-224.50-130, which can be accessed at: http://www.lrc.ky.gov/KRS/224-50/130.PDF
[3] Note that the SDC has already proven over 99.9999% DE in Germany for its German Operating permit
[4] All of the measurements at SP2 (defined later in the report) were non-detect for H; so the method detection limit was used to calculate the DE. This means that the actual DE is greater than the value shown.

destroyed, again without the need for donor charges, and with an absolute minimum of munitions handling.

Scrap exiting the process is treated to 5X conditions[5] for explosives and unrestricted clean conditions for chemical agents. Scrap remains in the unit at temperatures over 1000 degrees Fahrenheit for as long as is required to attain unrestricted clean conditions, and this has minimal adverse effects on process throughput. The unit is designed and built in such a way as to eliminate worker or public exposure to explosive or environmental hazards at any time during operations, and to produce products that are environmentally acceptable.

The unit is a fully operational piece of automated process equipment which has been designed with safety and high rate production in mind. The system is designed with interlocks and redundant systems where required, for safety and to prevent release of untreated products.

2.1 Detailed Description

2.1.1 Destruction chamber and enclosure

The SDC2000 is essentially a heated, armored, double shell retort, which is kept at a temperature of 550 to 600 degrees Centigrade (1022 to 1112 degrees Fahrenheit). A cross section through the chamber and overall unit is shown as Figure 2-1: SDC 2000 Cross Section through the Chamber.

[5] The 5X condition is defined as 15 minutes at 1000 degrees Fahrenheit. The SDC treats scrap to at least 30 minutes at 1000 degrees Fahrenheit and thus exceeds the necessary criteria.

This document contained Export Control/
International Traffic in Arms Regulations
Information.

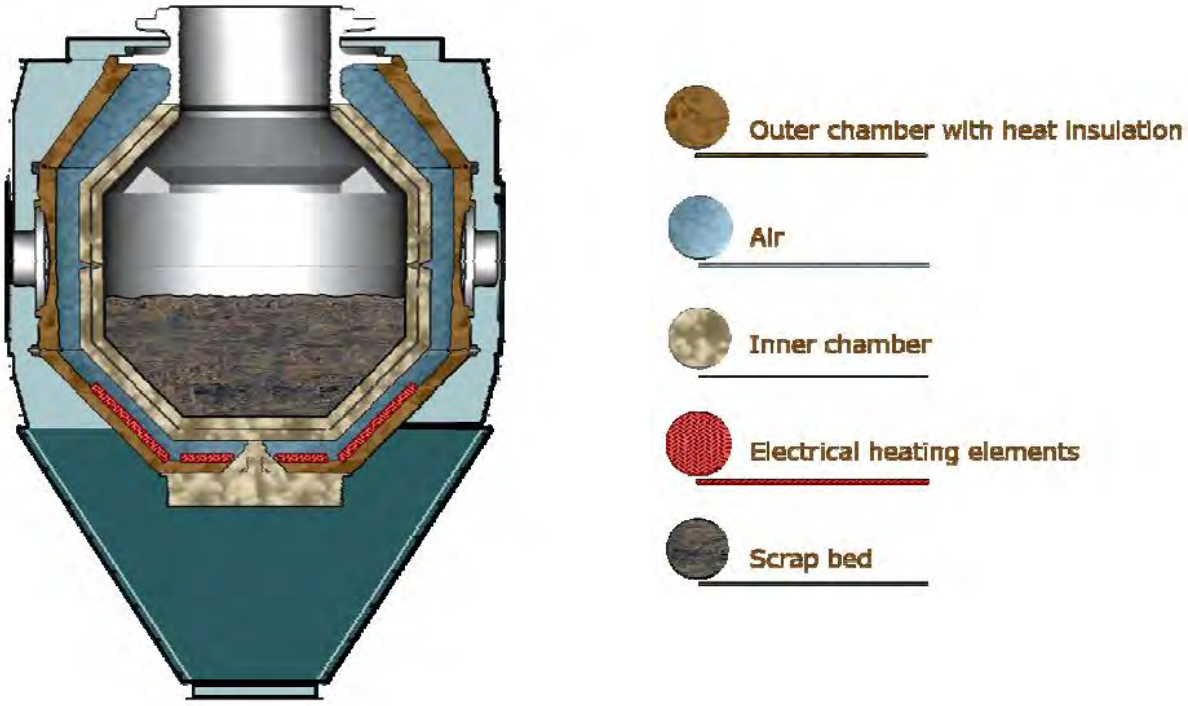

Figure 2-1: SDC 2000 Cross Section through the Chamber

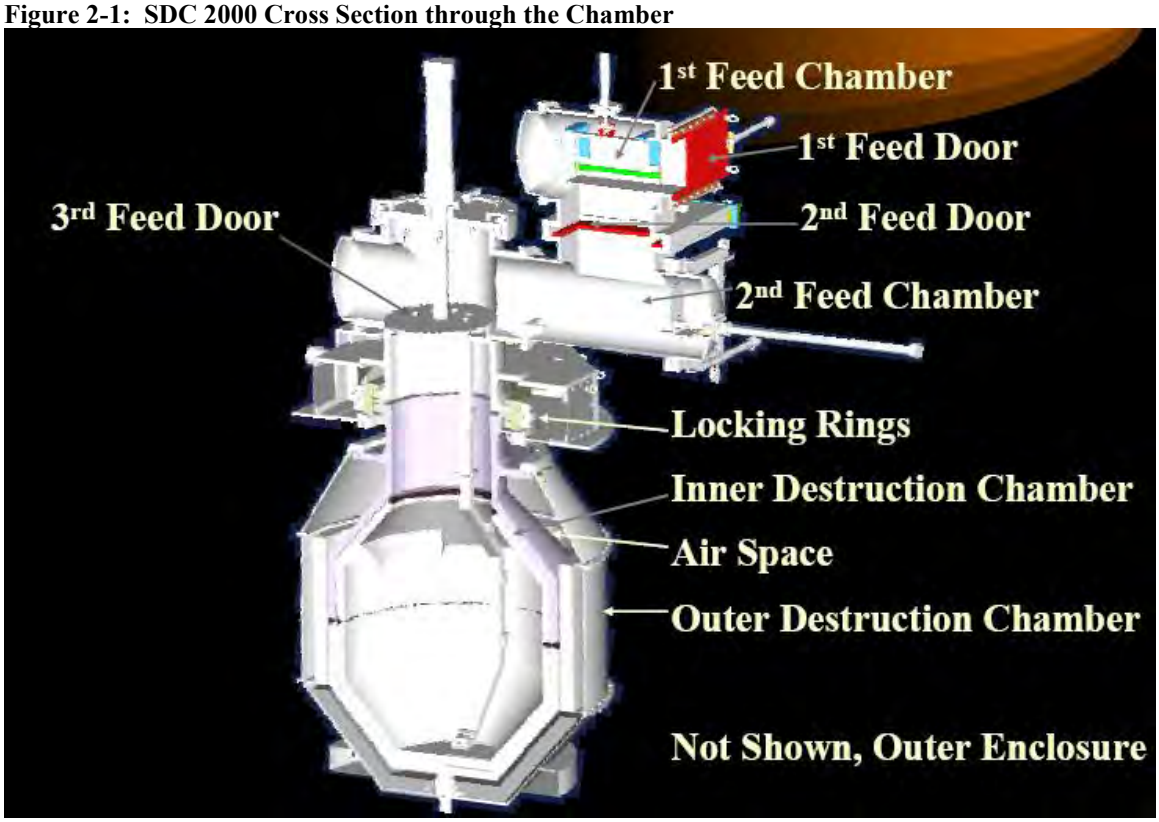

Figure 2-2: Cross Section of an SDC 2000

The inner chamber is manufactured from a heat resistant stainless steel with excellent tensile properties at high temperatures. The wall thickness is much greater than required by the mechanical stress loads caused by detonation pressures. The inner chamber is designed for a maximum detonation of 2.3kg of TNT plus a 100% safety margin. The chamber thickness is 7.5 cm of stainless steel based on 100,000 hours stress to rupture plus an additional 7.5 cm of Stainless steel as a safety factor. The extra wall thickness also serves as a wear layer to protect from fragments that may occur during the destruction process. In actual use, the inner layer of the inner chamber has shown negligible wear even after treating over 2,000,000 pounds of munitions, so that longevity of the equipment is not an issue. The inner chamber is surrounded by and sealed to an additional chamber made of the same steel as the inner one that serves as a 100% backup for the inner chamber. The inner and outer chambers are separated from one another by an air space which serves to decouple detonation stresses from the inner to the outer chamber, thus enhancing the overall safety and reliability of the unit. Also placed within this air space are electric resistance heaters, which supply heat to the unit. The outer chamber also includes thermal insulation on the outside for efficiency. Both the inner and outer chambers are housed in an enclosure which is kept under negative pressure. This enclosure serves as an additional barrier between the chamber and process room and protects workers from burns and dust, as well as providing additional vapor containment in the highly unlikely event that both the inner and outer chamber are breached.

2.1.2 Automated Feeding system

During operations the inner chamber is mated to a flange which is attached to the feeding system. The connection uses metal gaskets backed up with triple redundant inflatable seal rings to ensure a leak tight seal.

The feeding system is composed of a feed conveyer, a munitions elevator, and two airlock type feeding chambers equipped with doors. All munition items are fed in disposable cardboard boxes which prevent the items from rolling and/or misfeeding. The feed conveyer begins in the munitions loading room (refer to Figures 2-3 and 2-4) and ends at the munitions elevator.

This document contained Export Control/
International Traffic in Arms Regulations
Information.

Figure 2-3: Inside of Loading Room, showing Feed Conveyor and Blast Isolation Door

This document contained Export Control/
International Traffic in Arms Regulations
Information.

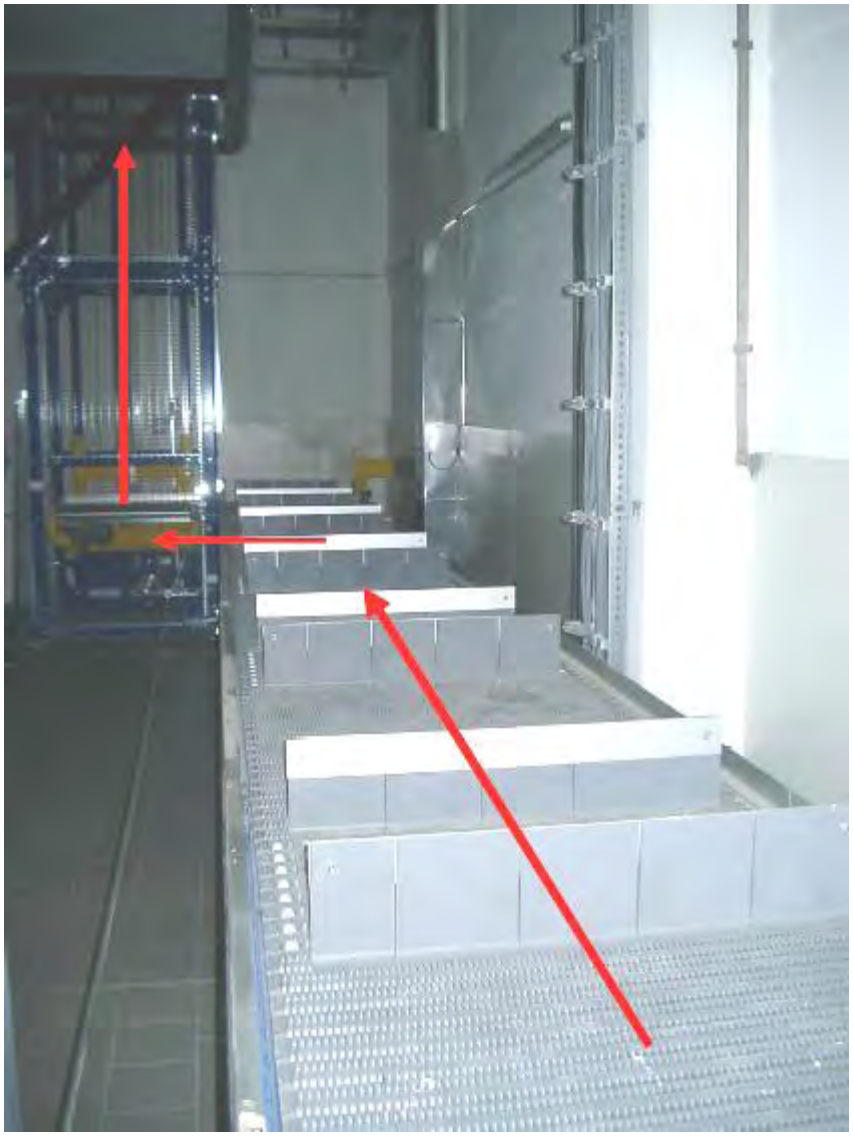

Figure 2-4: Sketch Showing Movements of Munitions within the Feed Conveyor System Inside the SDC Room

The feed conveyer accepts a full shift worth of munition items which are loaded onto it in the loading room prior to any conveyer movement. After the feed conveyer is loaded, the loading operator retires from the area and the feed conveyer moves one munition item at a time through the blast wall using a blast gate whose function is to isolate any potential blast effects in the loading room from the SDC room or vice versa. As each item is conveyed from the loading room to the SDC room for destruction the feed conveyer conveys it over to the munitions elevator where it is elevated to the level of the first loading chamber. From the elevator, the item is then conveyed to the apron of the first loading chamber (Figure 2-5).

This document contained Export Control/
International Traffic in Arms Regulations
Information.

Figure 2-5: Exit of Feed Elevator to Apron of First Loading Chamber

At this point, the feed system pauses until the control room operator acknowledges that the munition item is approved to load into the SDC. All movements from the feed conveyer to the first loading chamber are automatic; however the control room operator has full control of all movements and can abort or reverse the movements as required. The feed conveyer and elevator are also equipped with guides, interlocks, and sensors that prevent items falling off the conveyer or elevator or other problems, and will halt movements automatically if problems arise. The entire feed system (including inside the two feed chambers) is video monitored in real time in the control room by the operator.

Once at the apron of the first feed conveyer and after the operator gives the go-ahead for the loading operation, the first loading chamber door is opened to admit the munition item. The first loading chamber door is equipped with an inflatable gasket seal which prevents leakage from the first loading chamber out into the SDC room. After the door is opened, the box containing the munition item is pushed into the munition feed tray located in the first loading chamber by a hydraulically operated ram equipped with sensors to detect misfeeds and other problems. After the box is inserted, the ram withdraws and the first loading door is closed and sealed (Figure 2-6).

This document contained Export Control/
International Traffic in Arms Regulations
Information.

Figure 2-6: First Loading Door Closed and Sealed

At this time the first loading chamber is swept with an air feed so that the first loading chamber is at a positive relative pressure with respect to the second loading chamber. Note that the entire system remains under negative pressure with respect to the building in which it is enclosed. Next a hydraulically operated lowering device engages the munition feed tray located in the first loading chamber, and the second loading door, located on the floor of the first loading chamber is unsealed and opened. The munition loading tray is lowered into the second loading chamber, located under the first loading chamber. Next the lowering device is disengaged from the loading tray and withdrawn. The second door is then closed and sealed. During the loading operation air sweeps through the first chamber and into the second so that the first chamber remains clear of any contamination. Sweep air leaving the second loading chamber is conveyed through piping and valves to the gas treatment system. Next the fragment shield (third door) is opened. The fragment shield is a round circular plug shaped device that is lowered into the upper tubular part of the inner chamber during operations to prevent fragments from impacting the second loading chamber. When opened, the plug is hydraulically lifted to open a path from the second feed chamber into the SDC vessel. One feature of the feeding chambers and doors is that they are configured and designed to contain detonations or fragments within them equal to the design limit of the rest of the chamber. In addition, the chambers are placed out of line with each other so that a fragment, if generated while the fragment plug is up, cannot penetrate to the first chamber or outside.

This is provided even though operational practice is to allow any munitions fed to the SDC to detonate or explode before feeding the next.

After the munitions items are fed into the inner detonation chamber, the items heat up and the explosives cook off, usually resulting in a detonation or deflagration. All gasses, fragments and noise are contained within the unit. As there is insufficient air contained within the detonation chamber to support complete combustion of the detonation products and agents, the result is a pyrolysis reaction, which breaks down the detonation gasses to simple compounds which are then further treated in the gas treatment system.

If the item is not explosively configured (for example reconfigured or debursterized H rounds, smokes or WP), the fill will pressurize the container (shell) until the container fails. The container failure will occur at a weak point in the container, usually at the burster well crimp to the body of the projectile. At GEKA, WWI and II 10cm HD-filled Mortars frequently are processed with bursters that fail to detonate, but they do deflagrate. During inspection after processing, mortars that are not obviously ruptured are reprocessed as an added safety measure; however there has never been a case where the agent fill has failed to escape. In addition, at GEKA, tests were performed to validate that non-explosively configured rounds would empty in the SDC. Several empty 105mm and 150mm Mustard rounds were filled with water and a 1cm thick steel plate was welded over the nose opening. The rounds were fed to the SDC. After recovery in the scrap bins, all rounds were found empty, the pressure having broken the welds.

2.1.3 Equalization Tank and Dust Removal Cyclone

After the gasses exit the SDC, they are conveyed through insulated ducts to a heated equalization tank. The function of the tank is to attenuate and mix gas surges from detonations within the SDC so that the gas treatment system is presented with a better mixed and more uniform flow rate gas stream. The tank also holds the gasses at a temperature of 450 C for a period of about 2 seconds, thus aiding completion of the pyrolysis reaction. This then aids in the efficient operation of the gas treatment system. The heated equalization tank has a conical shaped bottom and is fitted with a lock hopper for large particle size dust removal. After the equalization tank, a heated cyclone is fitted to further remove smaller particle size dust. The cyclone is also fitted with a lock hopper. The amount of recovered dust is small, and all dust removed from the equalization tank and cyclone is recycled to the SDC. After the gasses exit the cyclone, they are conveyed through insulated ducts to the gas treatment system.

This document contained Export Control/
International Traffic in Arms Regulations
Information.

2.1.4 Gas treatment system

The gasses from the cyclone are directed through a gas treatment system[6]. First the gasses are conveyed to a Secondary Combustion Chamber (SCC) to react the reduced pyrolysis gasses to carbon dioxide and water. Next the gasses are conveyed to a fast quench system to prevent the formation of dioxins and furans and then through a scrubber system. The scrubber system is a three stage counter current unit containing an acid followed by a caustic and then a neutral backup scrubber. Following this, a selective catalytic reducer system removes NOx and an activated carbon filter/baghouse is used after quenching to remove any remaining pollutants (such as mercury, cadmium, or lead if any) using Sorbilit, a mixture of calcium oxides and carbonates with activated carbon. The remaining gasses are then removed from the system using redundant ID fans and conveyed to the stack. The stack gasses are monitored for HCl, CO, CO_2, SO_2, SO_3, NO_X, O_2, Dust, and H_2O.

2.1.5 Scrap handing

Scrap materials remaining in the detonation chamber are held at the chamber temperature, which ensures complete decontamination. When the chamber becomes 50% filled up with metal scrap from the demilitarization process (2 to 5 tons of scrap, or once a week at a minimum) the feed is stopped and a 1/2 hour waiting period commences. This waiting period assures that:

- All energetic materials within the scrap pile have reacted and been destroyed; and
- Residual contamination (if any) on the last item processed is destroyed.

After the waiting period, the inner/outer chamber is unmated from the feed system and is inverted and the scrap dumped out into scrap bins located under the chamber. A small amount of scrap is retained within the unit to serve as a bed for the next feeding cycle. The scrap unloading operation is automatic, but under operator control and is performed remotely. All removed scrap and dust is retained within the third (outer) enclosure (Figure 2-7), which is kept under a negative pressure with respect to the rest of the SDC room.

[6] The gas treatment system described for the GEKA installation may or may not reflect what is used at BGAD, as the system at GEKA requires capture and treatment of Arsenic from Clark I and II munitions, which are not present at BGAD.

This document contained Export Control/
International Traffic in Arms Regulations
Information.

Figure 2-7: Scrap Bin Enclosure

This enclosure serves as a location for the scrap to cool to a temperature safe to handle, and serves to hold the scrap material and dust for a time required to check for any residual contamination prior to release. During the scrap holding and cool down period, the chamber is re-mated to the feeding system flange and resumes destruction operations. After the scrap has cooled, the scrap bin doors are opened and the scrap bin is removed, and then replaced with an empty bin. The scrap is then inspected to ensure that all items have opened. If there is any doubt, the item is weighed. If there is still further doubt, the item is reprocessed. After inspection is passed the scrap is ready for recycle (it is in a 5X condition for explosives having been exposed to over 1000 degrees F for more than 30 minutes).

Most munitions are processed without cutting, disassembly or any additional processing, and mixed munitions can be processed at the same time to maximize production. There are some exceptions however, these are munitions containing shaped charges, and munitions which contain more than 2.3kg of explosive (NEW TNT equivalent). For these munitions, some processing or cutting is required to either defeat the shaped charge or reduce the amount of explosives per item to less than 2.3 kg. Items to be destroyed can be fuzed or unfuzed, and unstable propellant, unknown items, bulk propellant, bulk explosives, plastics, aluminum, contaminated trash and other materials can be accommodated.

Power and other utility requirements are low, as the only time electricity is used to heat the unit is at initial startup and at standby. During operations, heat from the explosives or propellants being destroyed supplies the necessary heat to keep the unit at temperature. Labor requirements are also low, usually four persons per shift, two to load munitions and two in the control room.

3 Operating Configuration

3.1 HD Configuration

The HD testing was performed by operating the SDC at its normal operating conditions, in a manner consistent with all of the host facility's (Munster III at GEKA) environmental permits and procedures, which have been accepted and approved by the authorities of the Federal Republic of Germany. HD Tests consisted of three three-hour runs as discussed below. The testing was conducted using 100 mm HD mortars. For each run, two or three mortars (depending on the test requirements) were fed in a single batch to the SDC approximately three times per hour[7], or every 20 minutes.

Sampling for HD was conducted at three sampling points. These were SP 1 (at the exit of the detonation chamber), SP1A (at the exit of the equalization tank and before the afterburner) and SP 2 (at the exit of the afterburner). Figure 3-1 is a schematic of the Munster III SDC, which shows the location of the sampling points. Downstream equipment, specifically the pollution abatement system (PAS) of the Munster III facility at GEKA is significantly different from that which could be proposed for BGCAPP and was not part of this test.

3.1.1 Propellant Processing configuration

The SDC was operated at normal operating conditions and was fed containers containing 2.3 kg propellant. 2.3 kg of propellant was the limit of the existing GEKA environmental permit, which does not make a distinction between detonating and deflagrating (high explosive and propellant) energetic materials. The containers consisted of plastic bags containing the propellant, (and optionally plastic two liter bottles with screw caps containing water) placed inside of corrugated cardboard boxes, along with 2 kg of aluminum pieces (6061 aircraft aluminum sheet, [redacted] Each container with 2.3kg of propellant and 2kg aluminum pieces was considered one feeding.

The feed rate (feedings per hour) for the tests was based upon studies performed prior to the testing by GEKA to determine the maximum feed rate attainable. The maximum feed rate was limited by the GEKA gas treatment system design and was determined to be 8 feedings per hour (18.4 kg or 40.5 pounds of propellant per hour). The propellant feed rate can be significantly higher with appropriate gas treatment system design.

[7] This is consistent with existing environmental permit requirements and standard operating procedures of the Munster III facility at GEKA.

3.2 Testing Overview

Three HD agent destruction tests using 10cm explosively configured HD projectiles and one propellant test were performed at the GEKA site. The test program at GEKA consisted of five days of testing as follows:

Day 1: Verification of the calibration of the in-line air feed flowmeter against EPA Method 1 measurements to ensure that this critical measurement was of appropriate quality.

Day 2: Processing three HD projectiles per feeding, one feeding every twenty minutes for three hours. Sampling for HD was conducted at SP1 (immediately after the SDC) and SP2 (immediately following the Secondary Combustion Chamber [SCC]).

Day 3: Feeding of 2.3 kg of propellant, 2.3 kg of aluminum strips of the same composition as the fins on M55 rockets, and 0 kg (first hour), 2.3kg (second hour) and 4.6kg (third hour) kg of water per feeding. A processing rate of one feeding every 7.5 minutes (eight per hour) for three hours was maintained. No agent sampling was conducted as this test's purpose was to observe the behavior of propellant and aluminum as found in an M55 NCRM. This test was also designed to demonstrate the ability of added water to absorb the energy released from the propellant and convey that energy to the offgas treatment system.

Day 4: Processing two HD projectiles per feeding, one feeding every twenty minutes for three hours. Sampling for HD was conducted at SP1 (immediately after the SDC) and SP2 (immediately following the SCC).

Day 5: Processing three HD projectiles per feeding, one feeding every twenty minutes for three hours. Sampling train relocated from the sampling point immediately after the destruction chamber (SP1A)

In addition, three tests to assess the ability of the SDC to empty full up M67 rocket motor cases (both with and without fins) were performed in Karlskoga, Sweden using an SDC that was undergoing refurbishment prior to being redeployed to the Ukraine. Separate test plans were written for the agent and propellant/emptying tests. These test plans are enclosed as Appendix 1. The tests are further described below.

3.3 Detailed Test Descriptions

3.3.1 100mm H Mortar Testing

3.3.1.1 Test Equipment Configuration

The locations of sampling points for the HD tests are shown in Figure 3-1: Static Detonation Chamber Flow Diagram. This figure provides a basic flowchart of the Munster III at GEKA System. Mustard sampling points 1, 1A, and 2 (SP 1, SP 1A, and SP 2) for the DE tests are called out immediately after the SDC and immediately downstream of the quench, respectively.

Figure 3-1: Static Detonation Chamber Flow Diagram

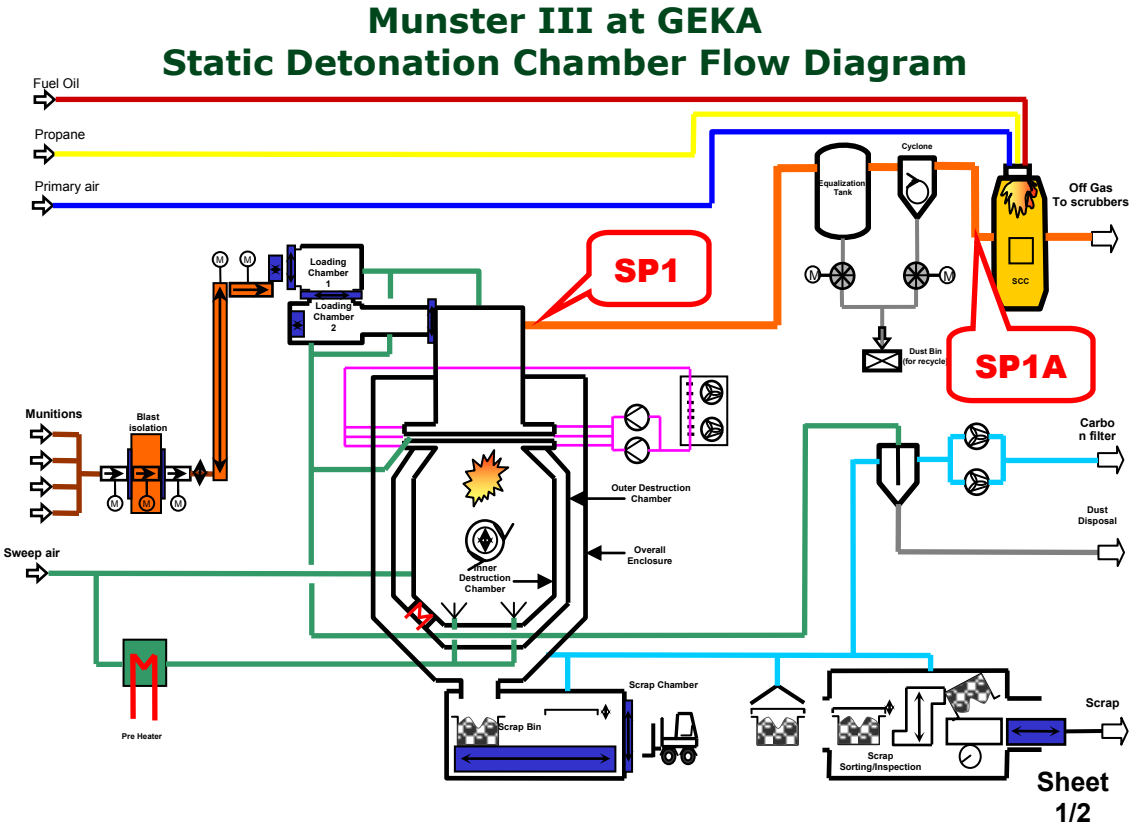

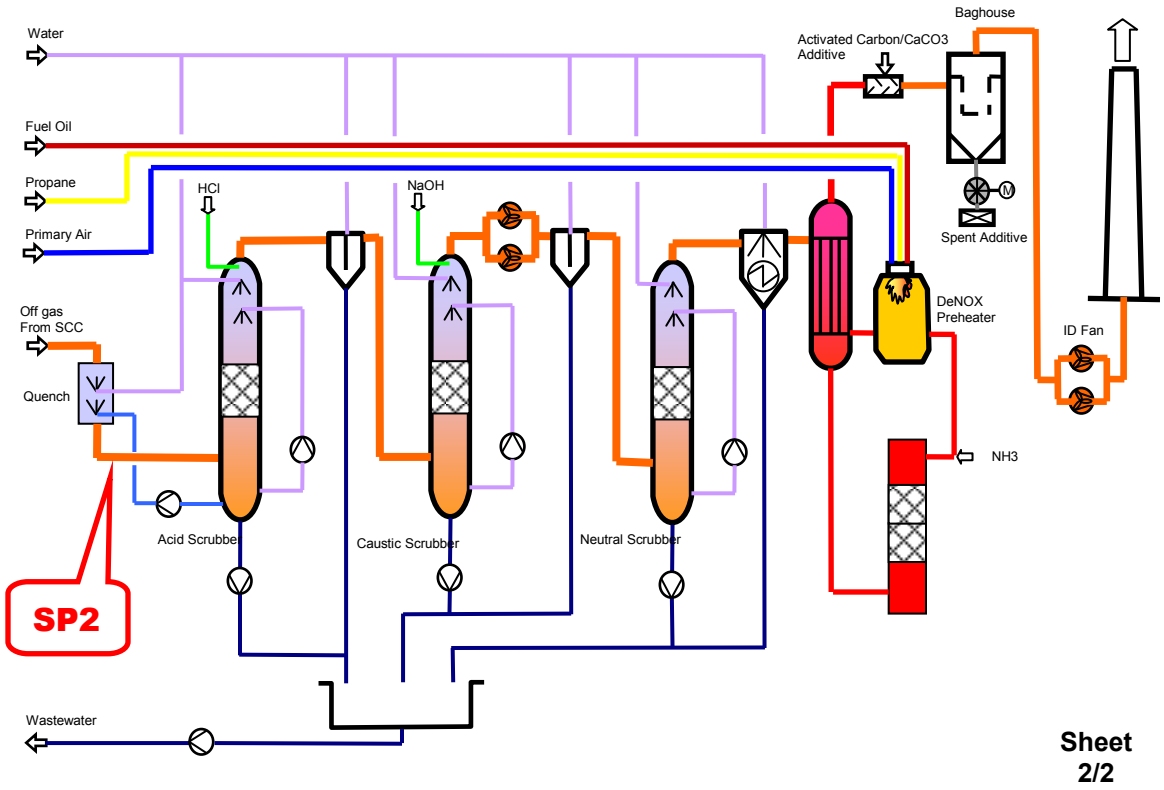

Figure 3-2: Sampling Points

3.3.1.2 Test Equipment – HD Runs 1, 2, and 3

The equipment used to perform the sampling for later analysis at SP1 consisted of parallel sampling trains which employed a Stainless steel tube in the gas stream followed by a glass "Y" tube to split the sample followed by two Texax tubes for sample collection followed by two programmable sample pumps (Figure 3-3: Test Setup at SP1).

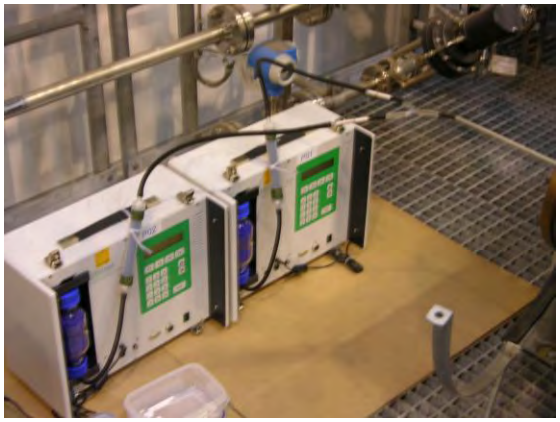

Figure 3-3: Test Setup at SP1

Information concerning the sample pumps and Tenax material can be found in Appendix 2. In addition, a RAID monitor was located in the vicinity of SP1 to serve as a personnel monitor to assure worker safety.

For SP2 the setup was similar to the setup at SP1 with the exception that a set of water traps in ice baths were added prior to the Tenax tubes to prevent excessive water condensation on the tubes which would have interfered with the analysis. These traps were necessary as the location of SP2 just after the quench meant that the gas stream would be saturated with water vapor. The condensed water from the water traps was analyzed separately for agent after the test. A third sampling point, SP1A, was added for

the last run in an attempt to avoid sample line plugging problems which hampered the collection of samples at SP1 during the first two tests.

Figure 3-4 Sample setup at SP1a

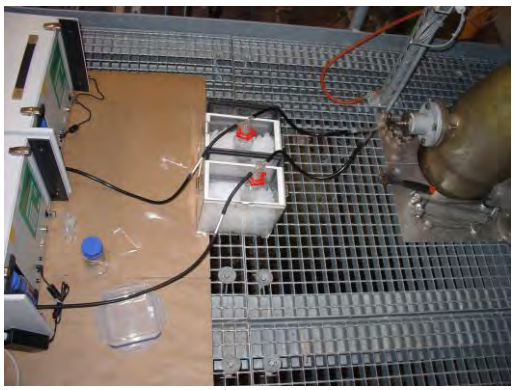

Figure 3-5 Sampling setup at SP2

3.3.1.3 Process Parameters

3.3.1.4 Run 1: Mustard Munitions Processing October 24, 2006

Munitions were staged and loaded per the host facility's procedures prior to testing. The SDC was operated at normal operating conditions and was fed three (3) each 100 mm HD mortars enclosed in a cardboard box (Figure 3-6: Typical Feed for Run 1). The three (3) 100 mm HD mortars fed concurrently during Run 1 were known as a single feeding. Three (3) feedings were performed per hour for the test duration of three (3) hours. The first test required 27 100 mm HD mortars in total.

Figure 3-6: Typical Feed for Run 1

The testing schedule used for Run 1 while processing mustard munitions is shown in the following table:

Table 3-1: Run 1, Testing Schedule

Run 1	Hour	Number of HD Mortars per Feed	Feeds per Hour	Total Number of Mortars Feed per Hour
	1st Hour	3	3	9
	2nd Hour	3	3	9
	3rd Hour	3	3	9

The test plan called for the results of test 1 to be used to fix the number of mortars to be used for the second HD test performed two days later. The plan was to use the following matrix to fix the Run 2 test parameters:

Table 3-2: Test 2 Parameter Matrix

Run 2	Testing Results from Run 1	Hour	Number of HD Mortars per Feed	Feeds per Hour	Total Number of Mortars Feed per Hour
Option A	Tenax-tubes at SP 1 and SP 2 indicate agent free	1st Hour	4	3	12
		2nd Hour	4	3	12
		3rd Hour	4	3	12
Option B	Tenax-tubes at SP 1 and SP 2 are inconclusive	1st Hour	3	3	9
		2nd Hour	3	3	9
		3rd Hour	3	3	9
Option C	Tenax-tubes at SP 1 and SP 2 indicate agent	1st Hour	2	3	6
		2nd Hour	2	3	6
		3rd Hour	2	3	6

The preliminary results from Run 1 however indicated agent at SP1 but agent free at SP2, so a decision was made to use Option C for Run 2. There were some issues with the sampling tube clogging with particulate matter at SP1, this issue is discussed in section 4 of this report.

3.3.1.5 Run 2: Mustard Munitions Processing October 26, 2006

Munitions were staged and loaded per the host facility's procedures prior to testing. The SDC was operated at normal operating conditions and was fed two (2) 100 mm HD mortars. The two (2) 100 mm HD mortars fed concurrently during Run 2 were known as a single feeding. Three (3) feedings were required per hour for the one day test duration of three (3) hours. Thus the second run required 18 each 100 mm HD mortars. The test setup was identical to the Run 1 setup, with the exception that the stainless steel sample inlet tube for SP1 was shortened to 6 cm in length and glass wool filters in glass flasks were added before the Tenax tubes in an attempt to prevent sample loss due to a plugged sample line. This modification to the sample line was ultimately unsuccessful however, and plugging was still a problem at SP1.

As in Run 1, agent was detected at SP1 but not at SP2 during Run 2. As plugging was still a problem, a decision was made by the team to move the sample location to a point after the expansion tank and cyclone, designated SP1A and repeat Run 1 with the sampling apparatus from SP1 placed there. The third run was performed on October 27.

3.3.1.6 Run 3: Mustard Munitions Processing October 27, 2006

Munitions were staged and loaded per the host facility's procedures prior to testing. The SDC was operated at normal operating conditions and was fed three (3) 100 mm HD mortars. The (3) three 100 mm HD mortars fed concurrently during Run 3 were known as a single feeding. Three (3) feedings were required per hour for the one day test duration of three (3) hours. Thus the third run required 27 each 100 mm HD mortars.

The test setup was identical to the Run 2 setup, with the exception that the stainless steel sample inlet tube for SP1 was moved to a point after the expansion tank and cyclone, designated SP1A with the sampling apparatus from SP1 placed there. During this run there were no issues with plugging of the line, although there was some condensation of water noted. In addition SP2 was not monitored for this run, as results at SP2 had already been established to the satisfaction of the team.

Agent was detected at SP1A during Run 3. The results of the testing are further discussed in Section 4 of this document.

3.4 Propellant and aluminum testing

3.4.1 Test Equipment Configuration

The SDC was operated at normal operating conditions and fed containers containing 2.3 kg propellant. 2.3 kg of propellant was the limit of the existing GEKA environmental permit. The containers consisted of plastic bags containing the propellant, (and optionally plastic two liter bottles with screw caps containing water) placed inside of corrugated cardboard boxes, along with 2 kg of aluminum pieces (6061 aircraft aluminum sheet, cut into pieces approximating the size of an NCRM fin). Each container with 2.3kg of propellant and 2kg aluminum pieces was considered one feeding.

The feed rate (feedings per hour) for the tests was based upon studies performed prior to the testing by GEKA to determine the maximum feed rate attainable. The maximum feed rate was limited by the gas treatment system and was determined to be 8 feedings per hour (18.4 kg or 40.5 pounds of propellant per hour).

3.4.2 Process Parameters

During the first hour 2.3 kg of propellant was fed with 2.3 kg of aluminum. During the second hour 2.3 kg of propellant was fed with 2.3 kg of aluminum along with 2.3 kg of water. [redacted] The addition of water was included in the testing to demonstrate that water can be used as a medium to limit temperature rise in the SDC during propellant processing by providing a means of transferring the heat from the propellant deflagration reaction to the gas treatment system. In the final and third hour of processing the quantity of propellant and aluminum was held constant and the quantity of water was increased to 4.6 kg.

The SDC was fed propellant boxes at a rate eight feedings per hour. The test proceeded without interruption and the SDC managed the maximum permitted amount of propellant within normal operating parameters. The 2.3 kg propellant fed per feeding is

[8] MIDAS, Defense Ammunition Center-Report of compounds for Rocket Motor 115mm M67 Assembly

approximately equivalent of ¼ NCRM which was limited by the GEKA permit that allows only 2.3 kg of energetic materials per feed cycle.

3.5 M55 rocket motor component removal testing

3.5.1 Test Equipment Configuration

At a separate location at the facilities of Structo in Kristinehamn, Sweden, a test to confirm that the SDC is capable of processing NCRM simulated motor cases without jamming or bridging on emptying was performed. At this facility, an SDC undergoing refurbishment for redeployment on a mine destruction campaign was used. The SDC was operated at cold operating conditions and was fed 50ea. 110 mm diameter X 1092 mm long tubes. This tube length simulated the cylindrical motor case plus the length of the closed fins. As there is a possibility that the fins may deploy during NCRM processing, 20 of these tubes were modified to simulate a motor case with opened and locked fins. The feeding was performed manually by placing each tube into the SDC through the chamber inspection door located on the side of the SDC outer enclosure. This door is normally used for maintenance and inspection of the SDC chamber, but was used as a way to feed the unit in this case as the normal feed chambers on this particular SDC were too small to feed the full sized test items. As the feed chambers for SDCs are sized according to the clients needs, this does not represent a limitation of the technology if BGCAPP does employ a unit for NCRMs. The 50 tubes represented filling the SDC chamber approximately half full of scrap, which is the normal fill level achieved before scrap removal operations take place.

The SDC chamber was rotated 90 degrees from the normal (vertical) operational orientation during the filling operations. During filling, no attempt was made to orient the tubes in any one orientation; rather an attempt was made to randomly orient the tubes as they were fed. After each feeding operation was complete, the SDC chamber was rotated back to the vertical. After this operation was complete, the SDC chamber was rotated 270 degrees to dump the simulated NCRM tubes from the unit. The 270 degree rotation was repeated until no scrap remained in the SDC, in several cases one rotation was sufficient to completely remove the tubes. There were three tests performed. 30 uncut tubes were fed for the first test and then emptied. Next 20 cut tubes (with attached parts simulating opened fins) were fed and emptied, and finally all 50 tubes (both cut and uncut) were fed and emptied. The dumping operation was recorded on video. In all three tests, the dumping operation completely removed the tubes, none remained in the chamber.

As the purpose of these tests was to assure that all of the tubes could be removed from the chamber, the chamber was rotated to 270 degrees from the vertical. In actual practice, normal operation of the SDC requires that some scrap remain in the SDC to provide a bed of material for additional processing. To provide for this bed, a fence or barrier within the chamber is located to retain some of the material when the chamber is inverted (rotated 180 degrees from the vertical). Normal operation of the chamber thus requires rotation to only 180 degrees, and a rotation to 270 degrees is only performed when all scrap is to be removed from the chamber.

3.6 Process Parameters

The SDC was operated at cold ambient conditions with no air flows into or out of the system. As there was no off gas treatment facility attached to the SDC in Sweden, there were no flows associated with it.

3.7 Photographs, diagrams

Figure 3-7: Opening of SDC Chamber in Inspection Position

Figure 3-8: SDC Chamber with 20 Simulated Open Fin NCRM Sections Loaded

Figure 3-9: Empty SDC After One Dump Cycle (Simulated NCRM with Fins)

This document contained Export Control/
International Traffic in Arms Regulations
Information.

4 Test Results

4.1 Summary

The three test series results, which are further described in detail below, are 100 mm H Mortar testing (agent testing), Propellant and aluminum testing, and M55 rocket motor component testing. For the agent testing, a DE of 99.999999989% (9 nines) was achieved at SP2 (just after the SCC), however DEs ranging from 99.99481% to 99.99508% were observed for SP1, and a DE of 99.99988% was observed at SP1A.

For the propellant and aluminum testing there were no problems feeding the materials, and there were no issues with processing them. There was an issue with dumping the scrap however; some of the aluminum in the chamber was burning when dumped. The aluminum was not burning while inside of the unit; apparently the burning only began after the chamber was unmated from the feed section and rotated prior to dumping. Note that this was a deliberate over test of the ability of the SDC to handle aluminum, as [redacted] of this test.

For the M55 rocket motor component testing (emptying test), all simulated motor cases were easily removed from the system, in most cases using a single dump cycle.

4.2 100mm H Mortar testing

4.2.1 Narrative

There were three days of agent testing performed for the agent test series (10/24, 10/26, and 10/27, 2006). Prior to the agent testing there was one day set aside for meetings, discussions of the test plans and set up for the tests (10/23/06). These test days are narrated below, in order starting with the test setup day.

4.2.1.1 10/23/2006 Test setup day

9:00 – 13:00
The first meeting of the team occurred at GEKA. At this meeting there was an introduction to and discussions about the test-plans for propellant and HD tests, and a Safety and Security briefing was given by GEKA. At the meeting, the following was determined:

[9] MIDAS, Defense Ammunition Center-Report of compounds for Rocket Motor 115mm M67 Assembly

- GEKA had X-Rayed all of the 10cm HD grenades that were used in the testing. From these x-rays they estimated the fill level of each round. The X rays are enclosed as Appendix 3.
- The purity of the HD was determined by common overpacking of 3 leakers and sampling the liquid that collected in the overpack. Two trials were performed and purities of 89.8% and 91.2% were determined by titration.
- The permanent gas composition at SP2 was determined by grab sampling and analysis in the onsite GEKA lab. This analysis will be used to establish molecular weight/density and further to confirm quantification of fuel and air flowrates to the SCC.
- There will be no fiberglass testing due to lack of appropriate materials to process.
- 1.9 of Test Plan calls out using RAID 1 at SP2. This is not feasible due to lack of sampling ports, so a RAID XP1 will be used for ambient monitoring for worker safety in the vicinity of SP1.
- Sweep air flow modulates between ~170Nm3/hr and ~190Nm3/hr due to the feedback flow control loop dynamics. This will be accounted for in the testing results by comparing the output results.

11:30 – 12:00
A tour of the Munster III plant took place. The tour encompassed the SDC room and the SDC, the equalization tank/cyclone room, The scrubber system with SCC and carbon (Sorbilite) filters, the control room, and the scrap discharge area. Not covered was the scrap sorting area, as this area may have had Arsenicals present from Lewisite processing, so that only persons with the proper PPE were admitted.

13:00 – 15:00
Installation of all equipment at SP 1 and SP 2 took place in preparation for testing over the next 4 days. A Pitot tube Calibration to calibrate the air flowmeter for SP1 took place. A three point calibration was performed at the following flow set points:

- 150 Nm^3/hr
- 180 Nm^3/hr
- 200 Nm^3/hr

These flows corresponded to the flows anticipated for the tests. The Pitot tube calibrations were performed by locating a sample point in the duct carrying exhaust gasses from the SDC to the equalization tank. This sample point was located in a straight section of duct according to the requirements of EPA Method 1A[10]. A standard series Pitot tube meeting the requirements of the method was used. Two traverses using four points each were made at 90 degrees from each other for each calibration run (8 total points per flow). The resulting velocity pressures were read directly from an inclined

[10] http://www.epa.gov/ttn/emc/methods/method1a.html

manometer meeting the requirements of the method. The velocity pressures were used to calculate the gas flow rates at the actual temperature and pressures existing at the time of the test, and these flows were then corrected to standard conditions using the Ideal Gas law. Table 4-1: Flow Calibration Results shows the results of the calibration, the corrected flows from the calibrations were used to calculate DEs for SP1.

Table 4-1: Flow Calibration Results

Setpoint (Nm^3/hr)	Calibrated Flow (Nm^3/hr)	Difference (%)
150	174.0	116%
180	198.8	110%
200	218.7	109%

The Pitot tube calibration is covered in detail in Appendix 4, which has three worksheets, one for each calibration point.

4.2.1.2 10/24/2006 First HD test day

This day's testing was interrupted due to an unplanned shutdown of the GEKA plant water system. This caused the Munster III plant to automatically go into safe mode. The cause of the shutdown was completely external to and unrelated to the SDC, however it is interesting to note that even though agent feeding had already commenced, and the plant was processing HD filled munitions at the time of the shutdown, no agent was released due to the shutdown, and no damage to the system resulted. The fact that no agent was released was verified by analysis of the Tenax tubes at SP2 where no agent was found. On resumption of the proper water supply to the Munster III plant after about one hour, the plant was brought back on line, all Tenax tubes were replaced, and testing was restarted. The following timeline includes the events leading up to the interruption.

TEST RECORD:

9:40 Sample pumps started. All personnel leave SDC room and retire to the control room
9:43 Start feeding boxes from feed room into SDC process room (SDC room sealed off)
10:01 First box fed into the feeding chambers
10:05 Box 1 fed into SDC
10:08 Alarm (apparently loss of quench water flow from the recirculating pump)

At 10:08:24 a warning about plant water loop low pressure occurred. 5 seconds later there is an alarm for low pressure in the GEKA plant water. (The PLC in the GEKA water works plant had failed, and caused the water works to go offline.) This stopped all pump seal water flows which caused 6 pumps to shut down in the off gas treatment system for the SDC. The Munster III plant responded as designed and went into safe mode, shutting

down the offgas treatment system and locking out the agent feed system. An emergency quench water supply system operated as designed and prevented damage to the scrubbers and scrubber packing. The maximum temperature achieved in the first scrubber was 58C thus indicating that quench plastic components did not overheat.

The test participants decided to restart the test after the water pressure was returned to normal and the off gas system was restarted. Spare tenax tubes were conditioned and installed for the restart. Another box of HD mortars was prepared (Box 10) and fed to maintain the 27 munitions for Run 1.

12:30 Start one-hour pre-test at temperature, program sample pumps to start at 13:30
13:30 Start sample pumps, feed Box 2 into Feed Chamber 1
13:34 Box 2 drops into SDC
13:40 Advance boxes and feed Box 10 into the SDC room.
13:51 Feed Box 3 into Feed Chamber 1
13:54 Box 3 drops into SDC
13:58 Advance boxes
14:11 Feed Box 4 into Feed Chamber 1
14:14 Box 4 drops into SDC
14:18 Advance boxes
14:31 Feed Box 5 into Feed Chamber 1
14:34 Box 5 drops into SDC
14:36 Sample pump at SP1 stops
14:38 Advance boxes
14:51 Feed Box 6 into Feed Chamber 1
14:54 Box 6 drops into SDC
14:58 Advance boxes
15:11 Feed Box 7 into Feed Chamber 1
15:14 Box 7 drops into SDC
15:18 Advance boxes
15:31 Feed Box 8 into Feed Chamber 1
15:34 Box 8 drops into SDC
15:38 Sample pump at SP2 stops
15:38 Advance boxes
15:51 Feed Box 9 into Feed Chamber 1
15:54 Box 9 drops into SDC
15:58 Advance last box
16:11 Feed Box 10 into Feed Chamber 1
16:14 Box 10 drops into SDC

At the end of the run a short meeting was held to summarize the day's events.

4.2.1.2.1 DE for 10/24/06

The DE for this test at SP1 and SP2 was calculated using the methodologies shown in section 4.3.

DE for SP1= 99.99481%

DE for SP2= 99.999999989%
(there was no agent detected at SP2, so the Method Detection Limit (MDL) was used to calculate the DE)

4.2.1.3 10/26/2006 2nd HD test day

For the 2nd HD test, the number of munition items per box was reduced to two, in accordance with the test plan. In addition, the following changes to the operational parameters were made:

- New shorter metal tube on sample probe
- Glass wool charged filter bottles before each tube
- Change the Tenax tubes after every 3 feed boxes
- Analyze all tubes and solids (individually and composite)

These changes were made to reduce problems of plugging in the sample lines leading to the Tenax tubes on SP1. Plugging of the lines causes the sample pumps to stop if they cannot maintain their programmed sample volume rate during sampling. Plugging of the sample lines to SP1 was a problem during the run on 24 October. In addition the sweep air flow was reduced to a nominal 150Nm^3/hr in order to increase the residence time in the SDC vessel. It was felt that this would also decrease the impingement of particulates into the sample probe, and thus help the plugging problem.

During the run however, plugging of the SP1 sample lines continued to be a problem. It appeared that reducing the air flow actually increased the plugging problem, so during the last hour of the test the air flow was increased back to a nominal 180Nm^3/hr. This allowed a one hour run for a Tenax tube at SP1 so that a data point could be obtained.

TEST RECORD:

9:00 – 10:00 One hour pre-test period
09:40 Start advancing boxes into SDC room
10:03 Box 1 into FC1 and advance boxes
10:05 Box 1 drops into SDC
10:23 Box 2 into FC1 and advance boxes
10:25 Box 2 drops into SDC
10:43 Box 3 into FC1 and advance boxes
10:45 Box 3 drops into SDC
10:52 Change Tenax tubes and metal sampling tube at SP1
11:03 Box 4 into FC1 and advance boxes
11:05 Box 4 drops into SDC

11:10 Sample pump at SP1 stops
11:23 Box 5 into FC1 and advance boxes
11:25 Box 5 drops into SDC
11:43 Box 6 into FC1 and advance boxes
11:45 Box 6 drops into SDC
11:54 Sample pump at SP2 stops
11:52 Change Tenax tubes and metal sampling tube at SP1
11:55 Increase sweep air back to 180m3/hr
12:03 Box 7 into FC1 and advance boxes
12:05 Box 7 drops into SDC
12:23 Box 8 into FC1 and advance boxes
12:25 Box 8 drops into SDC
12:43 Box 9 into FC1 and advance boxes
12:45 Box 9 drops into SDC

4.2.1.3.1 DE for 10/26/2006

The DE was calculated in a manner similar to the method used on 10/24/2006. Adjustments were made for the decreased sample time and consequent agent processed for SP1. SP2 calculations were also adjusted.

DE for SP1= 99.99508%

DE for SP2= 99.999999983%
(there was no agent detected at SP2, so the Method Detection Limit (MDL) was used to calculate the DE)

4.2.1.4 3rd HD test day 10/27/2006

The SP1 sample point was moved to a new location in an attempt to reduce the dust loading on the sampling system. This new point, SP1a, was located directly upstream of the secondary combustion chamber. This location is after the Expansion Tank and Cyclone which should help remove dust. GEKA treats this dust as contaminated material and feeds it back into the SDC for thermal processing. Accordingly, this material should not be considered in the DE calculation. Two parallel Tenax tube samples were pulled for 3 hours at SP1a. No sample was drawn at SP2 because there were two good data points already existing for SP2. Sweep gas flow rate was set at 150nM3/hr for the test. This was because it would give better retention times and the particulate should not be a problem at SP1a.

TEST RECORD:

08:30 One hour pre-test period
08:45 Start advancing boxes into SDC room
09:27 Box 1 into FC1 and advance boxes
09:29 Box 1 drops into SDC

This document contained Export Control/
International Traffic in Arms Regulations
Information.

09:47 Box 2 into FC1 and advance boxes
09:49 Box 2 drops into SDC
10:07 Box 3 into FC1 and advance boxes
10:09 Box 3 drops into SDC
10:25 Change sampling flow rate to 0.3 lpm
10:28 Box 4 into FC1 and advance boxes
10:30 Box 4 drops into SDC
10:31 Change Tenax tube at SP1a
10:47 Box 5 into FC1 and advance boxes
10:49 Box 5 drops into SDC
11:06 Box 6 into FC1 and advance boxes
11:08 Box 6 drops into SDC
11:27 Box 7 into FC1 and advance boxes
11:29 Box 7 drops into SDC
11:43 Change both Tenax tubes at SP1a
11:47 Box 8 into FC1 and advance boxes
11:49 Box 8 drops into SDC
11:55 Sample pump at SP1a stops
12:07 Box 9 into FC1 and advance boxes
12:09 Box 9 drops into SDC

4.2.1.4.1 DE for 10/27/2006

The DE was calculated in a manner similar to the method used on 10/24/2006.

DE for SP1a= 99.99988%

Note that there was no testing performed at SP2 for this run.

4.3 Calculation of DE at SP1, SP1a, and SP2

DE is calculated from the expression:

$DE = 100\% * (1 - M_{out}/M_{in})$

Where:

DE= Destruction Efficiency

M_{in} = mass H feed into SDC during the test duration

M_{out} = mass H detected during the test duration (if none is detected, the MDL or method detection limit is used)

This document contained Export Control/
International Traffic in Arms Regulations
Information.

M_{in} is in turn calculated by adding up the masses of H in the projectiles processed during the test, and M_{out} is calculated from the analysis of the Tenax tubes collected and the flow rate of the gasses from which the sample was taken. The flow rate is determined by flow meters which have been calibrated using a Standard Pitot tube for SP1 (as discussed in section 4.21.1) and the calibrated flow meter used at SP1 plus the purge air from the feed chambers at SP1A, and by using an oxygen balance method checked with flow meters for SP2, where Pitot tube calibrations were not possible due to the construction of the equipment. These calculations are further detailed below.

- Calculations at SP1

At SP1 the sweep air entering and exiting the SDC is measured using a flow meter (EKC10 CF001). This is the air flow rate which has been calibrated using the Standard Pitot tube and EPA Method 1A on 10/23/2006 as discussed in section 4.2.1.1. The Pitot tube calibration sheets and the factory calibration sheet for this flowmeter are shown in Appendix 4. The air flow rate multiplied times the test sample time gave a total volume of air which was sampled for the test.

The sample volume and sample time was measured by the sample pump. Redundant pumps and tubes were used in case of failure of one sampling system, but only one tube was analyzed per test. Pumps P01 and P03 were used at SP1, calibration sheets can be found in Appendix 2.

M_{in} was calculated by adding up all of the H fed in the feedings that were performed while sampling was taking place, and correcting this for agent purity (90.5%, as determined by titrations performed by GEKA).

M_{out} was determined by chemical analysis of the amount of agent present on the Tenax tubes (Appendix 6), then multiplying times the ratio of the total volume of air for the test to the sample volume.

- Calculations at SP1a

At SP1a the total volume of air consisted of the sweep air measured using flow meter EKC10 CF001 (calibrated using the Standard Pitot tube and EPA Method 1A on 10/23/2006 as discussed in section 4.2.1.1) plus purge air from feeding chambers 1 and 2. The purge air was measured using flow meter HHS20 CF001. The calibration sheet for this flow meter is shown in Appendix 4. The air flow rate multiplied times the test sample time gave a total volume of air which was sampled for the test.

The sample volume and sample time was measured by the sample pump. Redundant pumps and tubes were used in case of failure of one sampling system,

but only one tube was analyzed per test. Pumps P01 and P03 were moved from SP1 and used at SP1a, calibration sheets can be found in Appendix 2.

M_{in} was calculated by adding up all of the H fed in the feedings that were performed while sampling was taking place, and correcting this for agent purity (90.5%, as determined by titrations performed by GEKA).

M_{out} was determined by chemical analysis of the amount of agent present on the Tenax tubes (Appendix 6), then multiplying times the ratio of the total volume of air for the test to the sample volume.

- Calculations at SP2

The total volume of air was calculated by two methods, Oxygen balance and addition of all flows. The oxygen balance method uses the balanced chemical equation for the stochiometric combustion of a hydrocarbon in air:

$$C_xH_y + (x + \frac{y}{4})O_2 + 3.76(x + \frac{y}{4})N_2 \rightarrow \ xCO_2 + (\frac{y}{2})H_2O + 3.76(x + \frac{y}{4})N_2$$

Using No. 2 fuel oil, this equation reduces to:

$$\mathbf{C_{14}H_{30} + 21.5\ O_2 + 80.84\ N_2 \rightarrow 14\ CO_2 + 15\ H_2O + 80.84\ N_2}$$

Thus knowing the fuel flow one can determine the amount of air required and the combustion products resulting from the combustion of fuel oil in the SCC. Note that the above equation shows no free oxygen in the products; however excess air containing excess oxygen is added to the SCC to ensure complete combustion. Since the excess oxygen in the exhaust from the SCC is continuously monitored, the total flow rate can be calculated.

The average fuel flow was measured using flow meter HHF10 CF001 (certified by the manufacturer to be accurate to 0.3%) and the excess oxygen was measured by instrument HMB10 CQ001, which is calibrated daily using a certified calibration gas.

The oxygen balance method was checked against the second method, addition of all the gasses coming into the SCC. This method added the following flows:

Inflow stream	**Measuring Instrument**
Sweep air	EKC10 CF001
Primary combustion air	HLB15 CF001
Feed chamber flush air	HHS20 CF001

While a secondary air circuit existed, there was zero flow measured during the testing.

These flows were then compared to the oxygen balance method calculated above. On 10/24/2006 the two methods agreed to within 7.2% and on 10/26/2006 they agreed to within 5.1%. The lower of the two measurements for each day was used to calculate the DE.

The sample volume and sample time was measured by the sample pump. Redundant pumps and tubes were used in case of failure of one sampling system, but only one tube was analyzed per test. Pumps P04 and P05 were used at SP2, calibration sheets can be found in Appendix 2.

M_{in} was calculated by adding up all of the H fed in the feedings that were performed while sampling was taking place, and correcting this for agent purity (90.5%, as determined by titrations performed by GEKA).

M_{out} was determined by chemical analysis of the amount of agent present on the Tenax tubes (Appendix 6), then multiplying times the ratio of the total volume of air for the test to the sample volume.

The details of all of the calculations for DE are enclosed in Appendix 5.

4.4 10 cm HD Mortar data

The photos below show outside and cutaway views of an example of the 10cm WWII chemical mortar used for the HD tests. These munitions were recovered from a burial pit near Munster, Germany and were stored in a magazine near the Munster III plant until processed in the SDC. Although many of the rounds recovered were leakers, the rounds chosen for this testing were selected from non-leaking rounds.

This document contained Export Control/
International Traffic in Arms Regulations
Information.

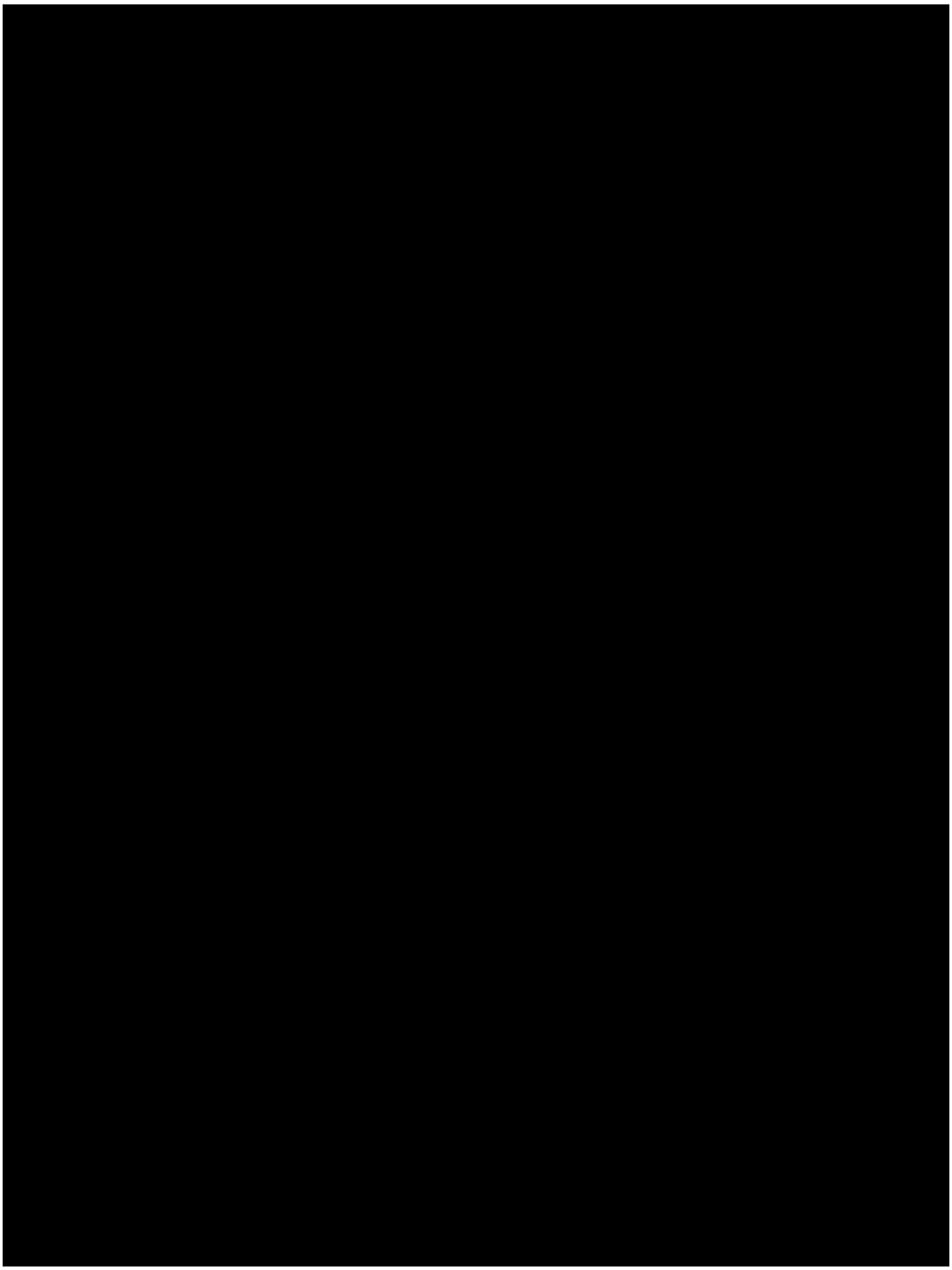

The following figure shows an x ray photograph of one of the rounds fed in the testing. This round was number 43 and was fed on 10/26/2006. Note the light colored diagonal line to the right of the photograph. This is the fill line, and corresponds in this case to an estimated 80% fill. X ray photos for all of the rounds fed are supplied in Appendix 3.

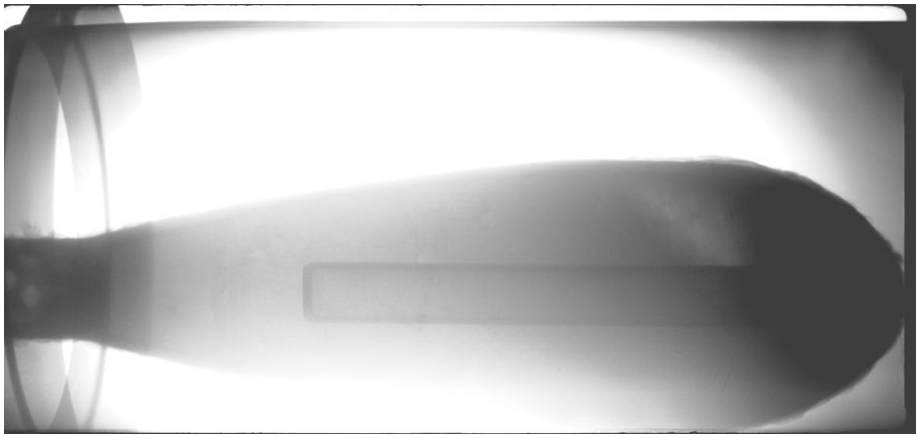

Figure 4-3: X Ray Photograph

The next photo shows two rounds that have been prepared for processing. They have been placed in a box ready for feeding.

Figure 4-4: Round Prepared for Processing

The next photo shows a round being removed from a storage container in the preparation and storage magazine in order to prepare it for processing. Note that the protective gear worn by the worker is required in the preparation room, which is not part of the SDC (Munster III) facility.

This document contained Export Control/
International Traffic in Arms Regulations
Information.

Figure 4-5: Round Being Prepared

The following tables show the data for the mortars fed for each test:

Table 4-2: Data for Mortars Fed 10/24/2006

10cm Mortar (WWII) for Blue Grass Testing									
Box No.	Shell No.	X-Ray Picture No.	Color	Internal Inventory No. (by color)	Fill Detected? (Yes/No)	Estimated Fill Level (%)	Small Burster Tube? (Yes/No)	X-Ray Impulse[11]	Total Mass (KG)
VE 01	4	406	Red	140	YES	90	YES	3x99	7.1
VE 01	33	435	Red	169	YES	80	YES	3x99	6.7
VE 01	75	477	Red	211	YES	80	YES	3x99	7
VE 02	23	425	Red	159	YES	66	YES	3x99	7.2
VE 02	32	434	Red	168	YES	70	YES	3x99	6.3
VE 02	80	482	Red	216	YES	90	YES	3x99	7.2
VE 03	5	407	Red	141	YES	90	YES	4x99	7.4
VE 03	9	411	Red	145	YES	70	YES	3x99	7
VE 03	18	420	Red	154	YES	100	YES	3x99	7
VE 04	12	414	Red	148	YES	66	YES	3x99	6.9
VE 04	19	421	Red	155	YES	66	YES	3x99	7
VE 04	28	430	Red	164	YES	90	YES	3x99	7.1
VE 05	2	404	Red	138	YES	80	YES	3x99	7.2

[11] 3 sets of 99 X ray pulses were used to provide the proper contrast for the X ray photos. In some cases 4 sets were used if rust was particularly heavy.

This document contained Export Control/
International Traffic in Arms Regulations
Information.

VE 05	78	480	Red	214	YES	80	YES	3x99	6.3
VE 05	87	489	Red	223	YES	70	YES	3x99	6.9
VE 06	21	423	Red	157	YES	66	YES	3x99	7.3
VE 06	76	478	Red	212	YES	80	YES	3x99	7.1
VE 06	89	491	Red	225	YES	70	YES	3x99	6.8
VE 07	10	412	Red	146	YES	80	YES	3x99	6.9
VE 07	24	426	Red	160	YES	90	YES	3x99	7.1
VE 07	88	490	Red	224	YES	80	YES	3x99	7.3
VE 08	34	436	Red	170	YES	80	YES	3x99	6.6
VE 08	74	476	Red	210	YES	80	YES	3x99	7
VE 08	77	479	Red	213	YES	70	YES	3x99	6.4
VE 09	22	424	Red	158	YES	66	YES	3x99	6.7
VE 09	30	432	Red	166	YES	90	YES	3x99	7.6
VE 09	35	437	Red	171	YES	80	YES	3x99	6.9
VE 10	84	486	Red	220	YES	80	YES	3x99	7.2
VE 10	85	487	Red	221	YES	70	YES	3x99	7
VE 10	90	492	Red	226	YES	70	YES	3x99	6.7

NOTE: BOX VE 01 was part of the initial test run that was aborted. Run 1 used boxes 2-10.

Table 4-3: Mortars Fed 10/26/06

Shell No.	X-Ray Picture No.	Color	Internal Inventory No. By Color	Fill Detected? (Y or N)	Estimated Fill Level (%)	Small Burster Tube (Y or N)	X-Ray Impulse	Mass (KG)	Box No.
69	471	Red	205	YES	70	YES	3x99	7	VE 01
83	485	Red	219	YES	80	YES	3x99	6.9	VE 01
71	473	Red	207	YES	70	YES	3x99	7	VE 02
86	488	Red	222	YES	70	YES	3x99	7	VE 02
68	470	Red	204	YES	80	YES	3x99	7.1	VE 03
82	484	Red	218	YES	80	YES	3x99	7.1	VE 03
43	445	Red	179	YES	80	YES	3x99	7	VE 04
81	483	Red	217	YES	80	YES	3x99	6.8	VE 04
45	447	Red	181	YES	80	YES	3x99	6.6	VE 05
70	472	Red	206	YES	80	YES	3x99	7	VE 05
64	466	Red	200	YES	70	YES	3x99	6.7	VE 06
92	494	Red	228	YES	80	YES	3x99	7	VE 06
67	469	Red	203	YES	80	YES	3x99	6.9	VE 07
91	493	Red	227	YES	70	YES	3x99	6.9	VE 07
46	448	Red	182	YES	80	YES	3x99	7	VE 08
52	454	Red	188	YES	70	YES	3x99	7	VE 08
42	444	Red	178	YES	80	YES	3x99	7	VE 09
57	459	Red	193	YES	80	YES	3x99	7.1	VE 09

Table 4-4: Mortars Fed 10/27/06

Shell No.	X-Ray Picture No.	Color	Internal Inventory No. By Color	Fill Detected? (Y or N)	Estimated Fill Level (%)	Small Burster Tube (Y or N)	X-Ray Impulse	Mass (KG)	Box No.
3	405	Red	139	YES	70	YES	3x99	6.7	VE 01
16	418	Red	152	YES	100	YES	3x99	7.1	VE 01
17	419	Red	153	YES	66	YES	3x99	7.1	VE 01
31	433	Red	167	YES	90	YES	3x99	7	VE 02
41	443	Red	177	YES	80	YES	3x99	6.8	VE 02
49	451	Red	185	YES	70	YES	3x99	6.8	VE 02
39	441	Red	175	YES	80	YES	3x99	7	VE 03
40	442	Red	176	YES	80	YES	3x99	6.8	VE 03
48	450	Red	184	YES	70	YES	3x99	6.7	VE 03
36	438	Red	172	YES	90	YES	3x99	6.8	VE 04
50	452	Red	186	YES	80	YES	3x99	7	VE 04
62	464	Red	198	YES	70	YES	3x99	6.6	VE 04
6	408	Red	142	YES	70	YES	3x99	6.4	VE 05
29	431	Red	165	YES	90	YES	3x99	7.1	VE 05
38	440	Red	174	YES	80	YES	3x99	7.1	VE 05
7	409	Red	143	YES	80	YES	3x99	7	VE 06
8	410	Red	144	YES	100	YES	3x99	7	VE 06
58	460	Red	194	YES	80	YES	3x99	7	VE 06
53	455	Red	189	YES	80	YES	3x99	7	VE 07
56	458	Red	192	YES	80	YES	3x99	7	VE 07
60	462	Red	196	YES	80	YES	3x99	7.2	VE 07
27	429	Red	163	YES	40	YES	3x99		VE 08
54	456	Red	190	YES	80	YES	3x99	7	VE 08
59	461	Red	195	YES	80	YES	3x99	6.9	VE 08
1	403	Red	137	YES	80	YES	3x99	7.2	VE 09
15	417	Red	151	YES	100	YES	3x99	7.1	VE 09
61	463	Red	197	YES	80	YES	3x99	7.2	VE 09

4.5 Scrap photos

The photos below show the treated materials from the 24 October run as they were removed from the SDC on 26 October.

This document contained Export Control/
International Traffic in Arms Regulations
Information.

Figure 4-6: Treated 10 cm Projectile with Nose Plug Blown Out

Figure 4-7: Discharged Scrap in Scrap Bin

4.6 Propellant and aluminum testing

On 25 October 2006 a test was performed to determine if the SDC was suitable for destruction of NCRM which are to be removed from the M55 rocket. A secondary objective of the test was to determine if adding water to the propellant could improve the amount of heat removed from the SDC from the propellant treatment. This heat is then rejected to the gas treatment system, which would enable higher throughput. A third objective of the testing was to determine if aluminum from the NCRM fins was suitable for treatment in the system.

The SDC was operated at normal operating conditions was fed containers containing 2.3 kg propellant. The containers consisted of plastic bags containing the propellant, (and optionally plastic two liter bottles with screw caps containing water) placed inside of

corrugated cardboard boxes, along with 2.3 kg of aluminum pieces (6061 aircraft aluminum sheet, cut into pieces approximating the size of an NCRM fin). Each container with 2.3kg of propellant and 2.3kg aluminum pieces was considered one feeding.

The feed rate (feedings per hour) for the tests was based upon studies performed prior to the testing by GEKA to determine the maximum feed rate attainable. The gas treatment system used at GEKA monitors the stack oxygen content and will shut down the system if the stack oxygen content falls below 4%. This is a safety measure designed to prevent the buildup of potentially explosive gasses in the system in the event of an SCC failure. GEKA performed studies before the test to determine the maximum number of feed cycles per hour can be tolerated by the system without shutdown. The maximum feed rate (feedings per hour) recommended by GEKA was 8 feedings per hour and this rate was used for the tests.

The feedings for the first hour contained the propellant/aluminum mix described. The next hour's feeding contained in addition to the propellant/aluminum mix described, two plastic bottles containing 2.3kg of liquid water total, at ambient temperature. The third hour's feeding contained in addition to the propellant/aluminum mix described, four plastic bottles containing 4.6kg of liquid water total, at ambient temperature.

The addition of water to the mixture was intended to demonstrate that the heat generated by the deflagration of the propellant in the SDC can be efficiently rejected to the quench system of the gas treatment train, so as to enable higher production rates than would be obtainable if the heat was removed from the SDC using only the sweep air. UXB has used this technique in its Taiwan operations to increase production when processing propellant. The use of water normally lowers the peak pressure in the SDC when processing propellant as well.

The testing parameters while processing propellants are shown in the following table:

Table 4-5: Propellant Testing Parameters

Hour	Amount of Propellant / Aluminum per Feed (kg)	Amount of Water per Feed (kg)
1st Hour	2.3/2.3	0
2nd Hour	2.3/2.3	2.3
3rd Hour	2.3/2.3	4.6

At the conclusion of the third hour of testing, after the last feeding had been performed, a period of time (safety time) of 30 minutes minimum was allowed to elapse before the SDC was emptied.

Exhaust gasses exiting the gas treatment train were sampled using the on line instrumentation on the system. Sampling was conducted at existing sampling point SP 3 utilized during March 2006 testing. The exhaust gasses were analyzed for flow, CO, CO_2, NO_X, O_2, particulate, and H_2O, using the on line instrumentation.

4.6.1 Narrative

The test began with preparation of the materials for the test. The photo below shows one of the boxes fed during the third hour of the test, it contains the propellant, aluminum and water in bottles.

This document contained Export Control/
International Traffic in Arms Regulations
Information.

Figure 4-8: Preparation of the Materials (3rd hour of testing)

The following photo shows the configuration of the propellant, the propellant used was TLP-L5680, an extruded double base propellant removed from tank rounds.

This document contained Export Control/
International Traffic in Arms Regulations
Information.

Figure 4-9: Configuration of the Propellant

The composition of the TLP-L5680 propellant was:

NC 54.2%
NG 25.5%
DEGDN 18.6%
Graphite 1.0%
Akardit II 0.7% (Stabilizer)

The following data shows the times that the boxes were fed to the system.

TEST RECORD:

8:41 Start advancing boxes into the SDC room
9:00 Box 1 into FC1 and advance boxes (first box with no water)
9:02 Box 1 drops into SDC
9:07 Box 2 into FC 1 and advance boxes
9:09 Box 2 drops into SDC
9:14 Box 3 into FC 1 and advance boxes
9:17 Box 3 drops into SDC
9:22 Box 4 into FC 1 and advance boxes
9:24 Box 4 drops into SDC

9:29 Box 5 into FC 1 and advance boxes
9:32 Box 5 drops into SDC
9:37 Box 6 into FC 1 and advance boxes
9:39 Box 6 drops into SDC
9:44 Box 7 into FC 1 and advance boxes
9:47 Box 7 drops into SDC
9:52 Box 8 into FC 1 and advance boxes
9:54 Box 8 drops into SDC
10:00 Box 9 into FC 1 and advance boxes (first box with 2.3kg of water)
10:02 Box 9 drops into SDC
10:07 Box 10 into FC 1 and advance boxes
10:09 Box 10 drops into SDC
10:15 Box 11 into FC 1 and advance boxes
10:17 Box 11 drops into SDC
10:22 Box 12 into FC 1 and advance boxes
10:24 Box 12 drops into SDC
10:30 Box 13 into FC 1 and advance boxes
10:32 Box 13 drops into SDC
10:38 Box 14 into FC 1 and advance boxes
10:39 Box 14 drops into SDC
10:45 Box 15 into FC 1 and advance boxes
10:47 Box 15 drops into SDC
10:52 Box 16 into FC 1 and advance boxes
10:54 Box 16 drops into SDC
11:00 Box 17 into FC 1 and advance boxes (first box with 4.6kg of water)
11:02 Box 17 drops into SDC
11:07 Box 18 into FC 1 and advance boxes
11:09 Box 18 drops into SDC
11:15 Box 19 into FC 1 and advance boxes
11:17 Box 19 drops into SDC
11:22 Box 20 into FC 1 and advance boxes
11:24 Box 20 drops into SDC
11:29 Box 21 into FC 1 and advance boxes
11:32 Box 21 drops into SDC
11:37 Box 22 into FC 1 and advance boxes
11:39 Box 22 drops into SDC
11:45 Box 23 into FC 1 and advance boxes
11:47 Box 23 drops into SDC
11:52 Box 24 into FC 1
11:54 Box 24 drops into SDC

The following table shows the configuration of the individual boxes:

Table 4-6: Configuration of Individual Boxes

Propellant Test Loading Plan			
Box No.	TLP L5680	Aluminum	Water in PE bottles

	(propellant)		
VE 01	2.30 kg	2.30 kg	0.00 kg
VE 02	2.30 kg	2.30 kg	0.00 kg
VE 03	2.30 kg	2.30 kg	0.00 kg
VE 04	2.30 kg	2.30 kg	0.00 kg
VE 05	2.30 kg	2.30 kg	0.00 kg
VE 06	2.30 kg	2.30 kg	0.00 kg
VE 07	2.30 kg	2.30 kg	0.00 kg
VE 08	2.30 kg	2.30 kg	0.00 kg
VE 09	2.30 kg	2.30 kg	2.30 kg
VE 10	2.30 kg	2.30 kg	2.30 kg
VE 11	2.30 kg	2.30 kg	2.30 kg
VE 12	2.30 kg	2.30 kg	2.30 kg
VE 13	2.30 kg	2.30 kg	2.30 kg
VE 14	2.30 kg	2.30 kg	2.30 kg
VE 15	2.30 kg	2.30 kg	2.30 kg
VE 16	2.30 kg	2.30 kg	2.30 kg
VE 17	2.30 kg	2.30 kg	4.60 kg
VE 18	2.30 kg	2.30 kg	4.60 kg
VE 19	2.30 kg	2.30 kg	4.60 kg
VE 20	2.30 kg	2.30 kg	4.60 kg
VE 21	2.30 kg	2.30 kg	4.60 kg
VE 22	2.30 kg	2.30 kg	4.60 kg
VE 23	2.30 kg	2.30 kg	4.60 kg
VE 24	2.30 kg	2.30 kg	4.60 kg

4.6.2 Results

The propellant feedings for the three hour test were completed with the anticipated results. There were no problems feeding the material, and no indications of problems during processing. After feeding was completed, a 30 minute safety time was allowed to elapse before the unit was opened to inspect and dump the scrap.

At the conclusion of the safety time, the SDC chamber was unmated from the feed system and inverted to dump the accumulated scrap from the system. The procedure was:

- deflate the 3 redundant seal gaskets between feed system and SDC
- retract the clamps
- lower the SDC chamber
- rotate vessel 90 degrees to inspect contents and make sure that there are no burning materials.

The inspection was accomplished using a remote camera system without opening the outer container of the SDC system, so that the SDC and its contents remained under negative pressure with respect to the building air at all times during the procedure.

During the inspection there was a flame inside the SDC chamber visible using the camera at the inspection point; following plant procedures the vessel was rotated back and forth ~20 degrees to mix the contents and was inspected again. There was still a flame visible so the vessel was rotated back to vertical (0 degrees) and re-mated to the feed system to wait an additional 20 minutes. This was again IAW plant procedures. After the allotted time, the unit was de-mated and inspected again.

There was still a small fire visible that went out when the vessel was rocked back and forth. The plant operators made an entry into the SDC room to inspect the vessel from the inspection door window. It appeared that the aluminum scrap was glowing. Since there were no active fires, GEKA decided to continue the emptying with the site Fire Brigade on hand. Some burning aluminum pieces were discharged into the scrap bin. The Fire Brigade controlled the burning by using CO2 fire extinguishers and covering the scrap with sand. The scrap bin was then left to cool over night.

During the run the overall peak stack gas flow rate decreased from 950 (during the first hour when propellant without additional water was being fed) to 860 NM^3/hr (when 2.6kg water per feed was added). In addition the gas temperature at the exit of the SDC was increasing from 350 to 400 C during the first hour (when propellant without additional water was being fed) and it leveled off at 440C during the second and third hours when water was being added. This illustrates the effect of water, it keeps the SDC from overheating when feeding propellant, and it decreases the peak flow rates coming out of the SDC, presumably by lowering the temperature inside. This effect was consistent with that observed by UXB International, Inc. (UXB) in Taiwan.

4.6.3 Tables

The following table summarizes the average operating parameters during the run:

Table 4-7: Average Operating Parameters

Hour	Peak Flow	Temp	Peak NO_2	HCl	Dust	O_2	Peak Pressure	TOC	CO	SOx
	NM^3/hr	C	mg/NM^3	mg/NM^3	mg/NM^3	%	Bar	mg/NM^3	mg/NM^3	mg/NM^3
1	950	350-400	632	.05	4	11.2	0.16	3.5	16	13
2	925	440	632	0.5	4	11.0	0.15	4.0	17	13
3	860	440	632	0.5	4	11.0	0.16	5.0	18	13

4.7 M55 Rocket Motor Component Removal Testing

4.7.1 Narrative

This document contained Export Control/
International Traffic in Arms Regulations
Information.

This test was part of the effort to evaluate the SDC's ability to meet the BGCAPP requirements for the destruction of NCRMs. The specific objective of this test was to confirm that the unit can process full size NCRM case items successfully. This test was performed at the facilities of Structo in Kristinehamn, Sweden, to confirm that the SDC is capable of processing NCRM simulated motor cases without jamming or bridging on emptying. An SDC from Taiwan currently undergoing refurbishment for redeployment in the Ukraine to process conventional munitions will be utilized for this testing. The refurbishment involves the modification of the SDC feed system to process high volumes of PFM1 mines.

The SDC was operated at cold operating conditions and was fed 50ea. 110 mm diameter X 1092 mm long tubes. This tube length simulated the cylindrical motor case length plus the length of the closed fins. As there is a possibility that the fins may deploy during NCRM processing, 20 of these tubes were modified to simulate a motor case with opened and locked fins. The feeding was performed manually by placing each tube into the SDC through the chamber inspection door located on the side of the SDC outer enclosure. This door is normally used for maintenance and inspection of the SDC chamber, but was used as a way to feed the unit in this case as the normal feed chambers on this particular SDC are too small to feed the full sized test items. As feed chambers for SDCs are sized according to the clients needs, this does not represent a limitation of the technology if BGCAPP does order a unit for NCRMs. The 50 tubes represented filling the SDC chamber approximately half full of scrap, which is the normal fill level achieved before scrap removal operations take place.

The SDC chamber was rotated 90 degrees from the normal (vertical) operational orientation during the filling operations. During filling, no attempt was made to orient the tubes in any one orientation; rather an attempt was made to randomly orient the tubes as they were fed. After each feeding operation was complete, the SDC chamber was rotated back to the vertical. After this operation was complete, the SDC chamber was rotated up to 270 degrees to dump the simulated NCRM tubes from the unit. The 270 degree rotation was repeated until no scrap remained in the SDC, a maximum of two rotations. There were three tests performed. 30 uncut tubes were fed for the first test, and then emptied. Next 20 cut tubes (with welded parts simulating opened fins) were fed and emptied, and finally all 50 tubes (both cut and uncut) were fed and emptied. The dumping operation was recorded on video. During the removal operation, if any bridging or other problems are discovered, these were noted. The time required to empty and the number of rotations required was documented. Discharging was performed by remote operation and once loaded the test articles were not manually manipulated.

The only variation from the planned test procedure was that after stopping at 180º rotation during each dump cycle, the vessel was then rotated to a 270º position before being brought back, through the 180º position, to the 0º position. This change was made because the original test plan was written assuming that the SDC vessel rotated in two directions and the scrap retention baffle could be avoided in one direction of rotation. In actuality, the SDC only rotates in one direction and to fully discharge all the scrap the

This document contained Export Control/
International Traffic in Arms Regulations
Information.

unit must be rotated to 270º in order for the scrap to flow over the baffle. This baffle can be seen in the figure below.

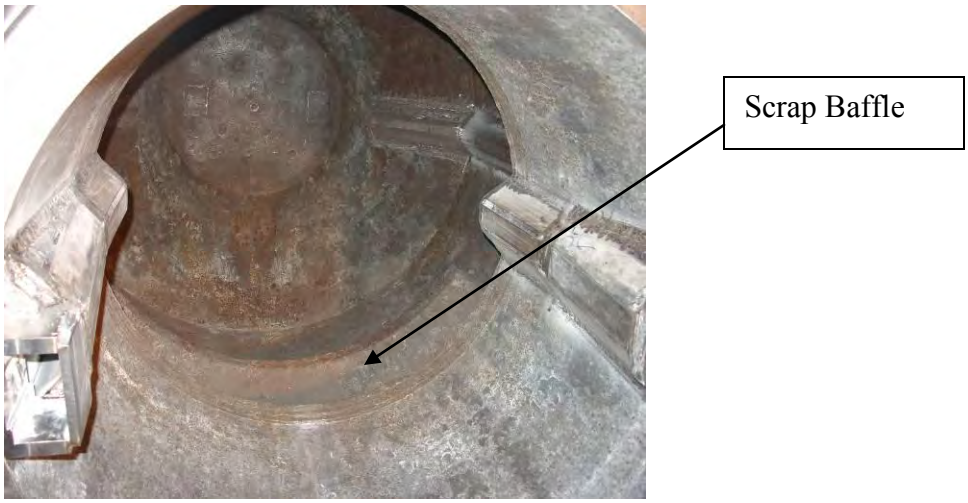

Figure 4-10: Inside of SDC through Feed Opening

In this photo, the SDC is rotated to the 90º inspection and access position. The scrap retention baffle is called out. The circular opening into the vessel is approximately one meter in diameter. This opening is used for feeding munitions and discharging scrap.

4.7.2 Results

- In all cases the simulated rocket motor casings were discharged from the SDC without significant difficulty.
- Any bridging that occurred in the SDC vessel cleared upon the subsequent rotation of the vessel.
- Each dump cycle starting at the 0º vertical position, stopping at 180º, rotating further to 270º and finally returning to 0º took approximately 3-4 minutes.
- Results indicate that some or all of the scrap in the vessel can be discharged. If an SDC-2000 is installed at BGAD, The specific scrap discharging procedure will have to be worked out at that time to maintain the required bed of scrap in the vessel but to remove the excess.
- Significant bridging occurred in the discharge chute funnel above the scrap bin, but this opening was not designed for items as long as the rocket motor casings and can be made essentially any desired size in a new unit. Accordingly, this bridging is not an issue.
- The straight tubes (without fins) bridged more than the tubes with fins. This appeared to be due to the overall length of the straight tube (1092 mm) being greater than the finned tubes (~1000 mm) and just long enough to span the opening in the SDC vessel. Again, this was not a problem because the blockage cleared upon subsequent rotation.

The table below summarizes the data from the test:

This document contained Export Control/
International Traffic in Arms Regulations
Information.

Table 4-8: Test Data Summary

	Run 1 (30 Straight Tubes)	**Run 2** (20 Tubes with Fins)	**Run 3** (30 Straight Tubes and 20 Tubes with Fins)
Rotation 1 (0º to 180º)	6	11	29
Rotation 1 (180º to 270º and back to 0º)	4	9	12
Rotation 2 (0º to 180º)	6	-	4
Rotation 2 (180º to 270º and back to 0º)	14	-	5
Total	***30***	***20***	***50***

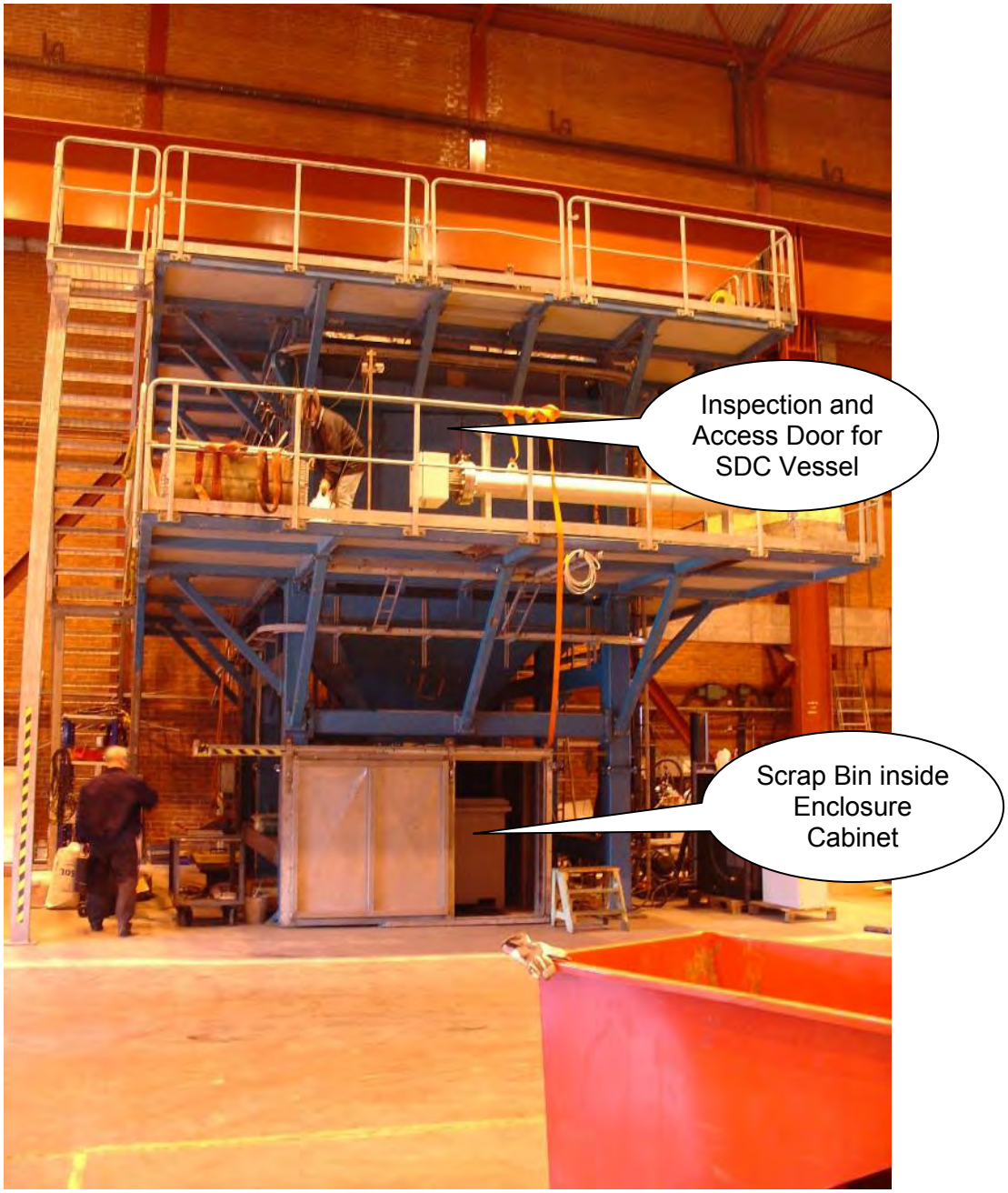

Figure 4-11: SDC 2000 System

Figure 4-12: The Structo Shop Floor

Structo is a heavy machining and fabrication shop. They specialize in, among other things, machining and assembling drive shafts and propellers for large ocean vessels. Dynasafe is leasing space from Structo for the modifications to this SDC-2000 in preparation for deployment to the Ukraine.

Figure 4-13: Inside of SDC 2000

This SDC-2000 was deployed in Taiwan and was used to process over 6,000,000 pounds of conventional munitions. The interior surfaces appear to be in excellent condition.

This document contained Export Control/
International Traffic in Arms Regulations
Information.

This picture focuses on the scrap retention baffle inside of the vessel. When rotated 180º this baffle holds some of the scrap in the vessel which is a requirement for operations. At 270º all of the scrap can flow out of the vessel.

Figure 4-14: Inside of SDC 2000

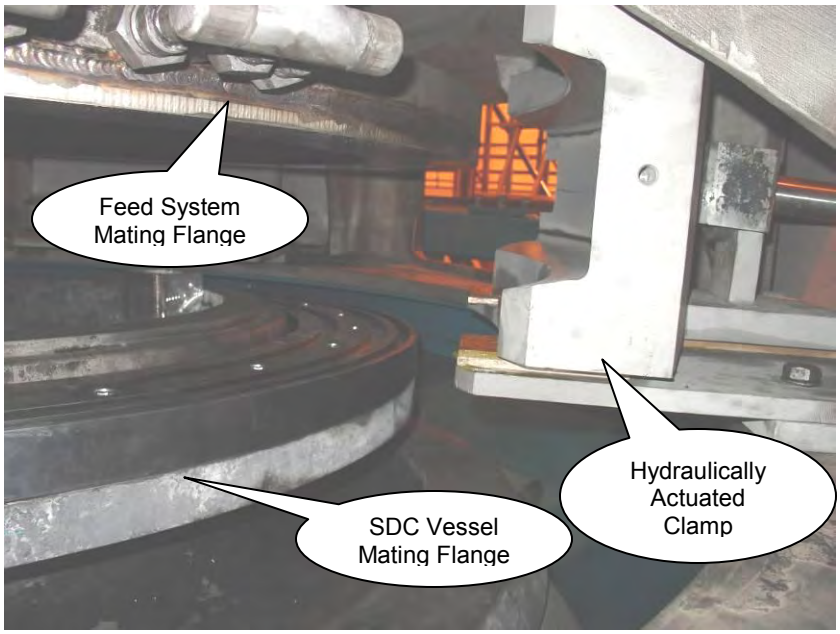

The SDC Vessel is at the 0º home position. During processing the SDC is raised by integrated hydraulic lifts until it contacts the feed system. The clamps are then actuated to secure the flanges to each other. Finally, the flange gasket(s) is(are) inflated and the system is ready for operation.

Figure 4-15: Feed System/Vessel Mating Joint

This document contained Export Control/
International Traffic in Arms Regulations
Information.

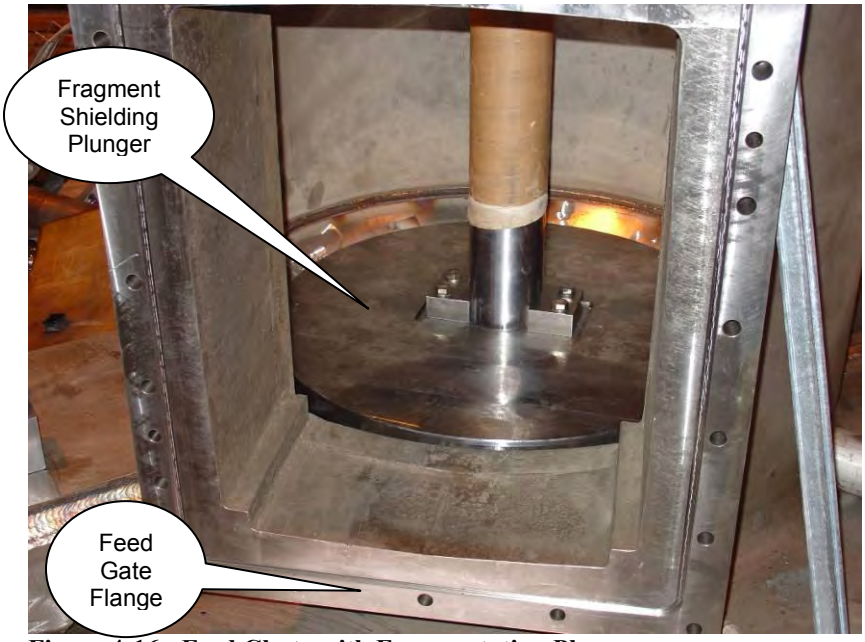

Figure 4-16: Feed Chute with Fragmentation Plunger

This assembly is mounted on the top level of the structure immediately above the SDC Vessel. The automated airlock feed system bolts on to the Feed Gate Flange. During feeding the Plunger is raised above the opening to allow the munitions to drop into the SDC. Immediately after feed, the Plunger is lowered to protect the feed gate from fragments. The plunger does not seal off the blast pressure, but the redundant gates are designed to provide total containment.

Figure 4-17: Feed Elevator Looking Down from Top Level

This document contained Export Control/
International Traffic in Arms Regulations
Information.

Figure 4-18: Interior of Empty Scrap Bin

This picture shows the SDC vessel loaded with 30 straight tubes. The tubes are carbon steel tubing measuring 1092 mm long by 114 mm in diameter. This is very close to the dimensions of the M67 rocket motors that will be separated from the M55 rockets.

Figure 4-19: Run 1, SDC with 30 Straight Tubes

This document contained Export Control/
International Traffic in Arms Regulations
Information.

In this picture the SDC-2000 vessel has been rotated up to the 0º vertical "home" position. We see the outside of the outer shell. The Inspection and Access Door in the left foreground is normally closed during operations but was used for feeding and inspecting during this test.

Figure 4-20: SDC Vessel in Home Position

Figure 4-21: Nine Straight Tubes in Scrap Bin after First Rotation

This document contained Export Control/
International Traffic in Arms Regulations
Information.

In this picture the SDC-2000 vessel has been rotated back to the 90º position from 270º during the first rotation of Run 1. The straight tubes have bridged lengthwise across the opening keeping 21 out of 30 in the vessel after the first rotation. The bridge cleared when the vessel was rotated back up to 0º and the remaining 21 tubes discharged without bridging during the second rotation.

Figure 4-22: Bridging After First Rotation in Run 1

Figure 4-23: Simulated Rocket Motor Casings with Fins

Steel fins measuring 200mm x 20mm x 4mm were welded to the end of 880mm tubes to simulate rocket motor casings with fins deployed. The overall length was 1085mm with fins. The fins were attached at an angle of 60º from the longitudinal axis of the casing.

Figure 4-24: Finned Tube being Loaded into SDC Vessel

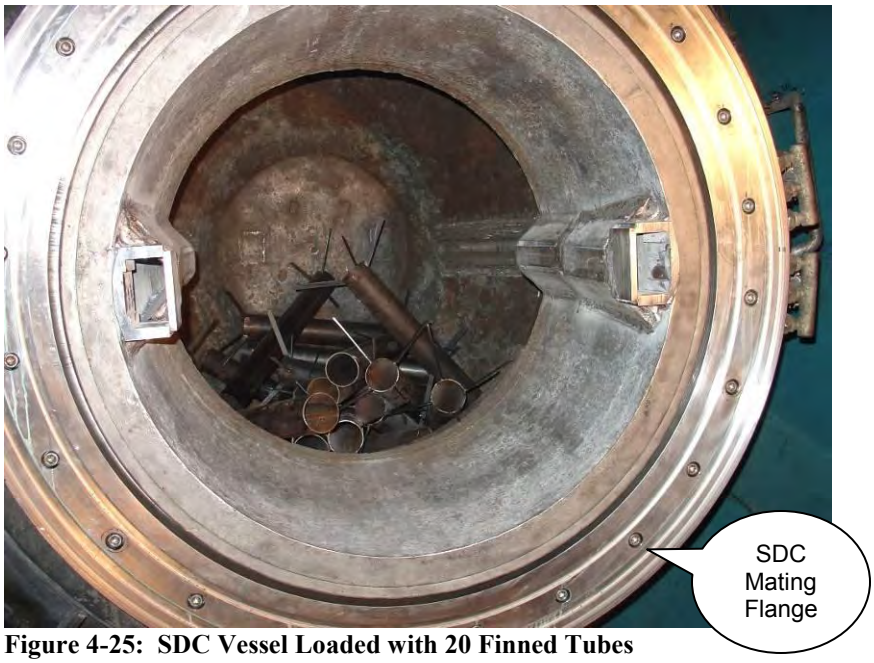

In this photo the mating flange on the SDC Vessel is called out. An inflatable gasket is installed into the groove and is inflated after the vessel is rotated to the 0º operational position and mated to the complementary flange on the bottom of the feed system. SDCs designed for processing chemical weapons have triple inflatable gaskets at this flange.

Figure 4-25: SDC Vessel Loaded with 20 Finned Tubes

This document contained Export Control/
International Traffic in Arms Regulations
Information.

The 20 finned tubes discharged during the first rotation cycle. In this photo the SDC Vessel is at the 180º dumping position. Several tubes can be seen bridged across the discharge chute opening which is directly above the scrap bin. This opening would have to be larger in an SDC designed to process M67 rocket motors.

Figure 4-26: Finned Tubes Bridged Across Discharge Chute Funnel

Figure 4-27: 20 Finned Tubes Being Lifted in Preparation for Run 3

This document contained Export Control/
International Traffic in Arms Regulations
Information.

Figure 4-28: Loading the Vessel for Run 3

Figure 4-29: SDC Vessel Loaded with All 50 Tubes for Run 3

In the first rotation cycle of Run 3, 41 tubes discharged from the SDC. As can be seen in the photo, several of the tubes bridged across the discharge chute opening above the scrap bin. This blockage was cleared with a long pole and the test continued.

Figure 4-30: Tubes Bridged in Discharge Chute after Run 3, Rotation 1

The 9 simulated rocket motor casings that bridged in the vessel after the first rotation are seen in this photo. These casings cleared during the second rotation.

Figure 4-31: 9 Tubes Remaining in Vessel after Run 3, Rotation 1

5 Discussions and Conclusions

5.1 Achieved DE

DE for the system in Germany was acceptable (greater than 6 9s) at SP2, which was immediately downstream of the secondary combustion chamber. Here there were two runs which resulted in DE greater than 99.999999989% on 10/24/2006 and greater than 99.999999983% on 10/26/2006. There was no agent

detected at SP2 on either date so the Method Detection Limit (MDL) was used to calculate the DE.

At SP1, which is located just after the SDC chamber, the achieved DE was 99.99481% on 10/24, and 99.99508% on 10/26. One run on 10/27/2006 sampled the gasses at a location (SP1a) just before the SCC and after the heated equalization tank, which resulted in the gasses being held at temperature longer than they were at SP1. The DE achieved at that location, 99.99988%, improved on the DEs found at SP1. Based on these results, a slightly larger equalization tank and/or higher temperature heat tracing may produce a DE greater than or equal to 99.9999% at SP1a.

The achieved DE at SP2 exceeds the requirements for the State of Kentucky Administrative Regulation KAR-224.50-130.

5.2 Propellant processing and rocket motor capability

The SDC was able to process simulated rocket motor cases without problems and was able to empty them without bridging or other untoward problems. The system was also able to process propellant, similar to that used in the M67 motor, without problems as well. When processing large quantities of aluminum in the presence of propellant, some problems arose where aluminum combusted in the SDC and gave problems on emptying, however in all other respects the operation was without issues.

6 Appendixes

Appendix 1. Test Plans

This appendix contains the test plans which were followed to develop the data contained in this report

Appendix 2. Sample pump calibration sheets and manual

This appendix contains calibration sheets for the sample pumps used to draw samples of gasses through Tenax tubes which were then analyzed to determine amount of agent on the tubes. The calibration sheets are referred to in section 4.3. The manual for operation of the pumps is also included.

Appendix 3. 150mm HD Mortar x-rays

An X ray photograph of each of the 150mm German WW II era mortars used in the test program is included in this appendix, along with cut-away photographs of an example of the mortar. These photographs are referenced in section 4.2

This document contained Export Control/
International Traffic in Arms Regulations
Information.

Appendix 4. Calibration Sheets for Flowmeters

Calibration sheets are enclosed for the following flowmeters:

Stream	Measuring Instrument
SDC Sweep air	EKC10 CF001
SCC combustion air	HLB15 CF001
SDC Feed chamber flush air	HHS20 CF001

In addition Pitot tube calibrations according to EPA Method 1A were performed on the SDC Sweep air flowmeter (EKC10 CF001) at 150, 180, and 200 NM^3/Hr. These calibration sheets are also included. The calibration sheets are referenced in sections 3.3, 4.2, and 4.3

Appendix 5. DE Calculations

This appendix contains the detailed calculations which resulted in the DEs shown for SP1, SP1a, and SP2 on the three test days. They contain the details of the agent weight processed, agent purity, sample and total gas volumes, and the associated calculations. This appendix is referenced in Section 4.3

Appendix 6. Analytical Report

This appendix contains the Analyitical report from Hazard Control Group, the German analyitical lab which performed the analysis on the Tenax tubes after they were exposed during the testing. The report includes a discussion of laboratory QA/QC measures taken. The report is referenced in Section 4.3

This document contained Export Control/International Traffic in Arms Regulations Information.

Appendix D-4: **Anniston Chemical Agent Disposal Facility, Static Detonation Chamber, Emissions Test Plan, Revision 2, August 2010**

ANCDF SDC Emissions Test Plan, Revision 2, August 2010

This document contained Export Control
International Traffic Arms Regulation Information

ANNISTON CHEMICAL AGENT DISPOSAL FACILITY
STATIC DETONATION CHAMBER
EMISSIONS TEST PLAN

This document was reviewed by RWR and no OPSEC-sensitive information was discovered.

Revision 2, August 2010

PREPARED BY:

Westinghouse Anniston
Trial Burn Department
3580 Morrisville Road
Anniston, AL 36201

PREPARED FOR:

Chemical Materials Agency
Anniston Field Office
3580 Morrisville Road
Anniston, AL 36201

SUBMITTED TO:

Alabama Department of Environmental Management
1400 Coliseum Boulevard
Montgomery, AL 36110-2059
Attn: Gerald Hardy

RCRA Permit Controlled Document

TABLE OF CONTENTS PAGE

1.0 EMISSIONS TESTING OVERVIEW 1

1.1 WASTE TREATMENT SYSTEM PROCESS AND FEED DESCRIPTIONS 3

1.2 EMISSION TESTING SAMPLING AND ANALYTICAL PROTOCOLS 4

2.0 DETAILED ENGINEERING DESCRIPTION 5

3.0 DESCRIPTION OF AUTOMATIC WASTE FEED CUTOFF SYSTEM 12

4.0 EXHAUST GAS MONITORING EQUIPMENT 13

5.0 LOCATION AND DESCRIPTION OF THE PROCESS CONTROL SYSTEM 13

6.0 STARTUP/SHUTDOWN PROCEDURES 14

7.0 SAMPLING AND ANALYSIS PROCEDURES 14

8.0 SAMPLING LOCATIONS 14

9.0 SCHEDULE 14

10.0 RAMP-UP PERIOD 15

11.0 EMISSIONS TEST PERIOD 15

12.0 POST-TEST PERIOD 15

13.0 EMISSIONS TEST RESULTS 15

14.0 FINAL PERMIT LIMITS 15

LIST OF TABLES PAGE

1 Mustard Agent Characteristics 16

2 FPI Conditions for Mustard and Conventional WMM 17

LIST OF APPENDICES

A SAP/QAPP
B Material and Energy Balances
C Example DRE Calculations
D Mustard Purity for ANCDF Agent Lots
E CMS Plan

List of Acronyms and Abbreviations

≥ .....greater than or equal to
< .....less than
% .....percent
° .....degrees

ACAMS .....Automatic Continuous Air Monitoring System
ADEM.....Alabama Department of Environmental Management
ANAD .....Anniston Army Depot
ANCDF .....Anniston Chemical Agent Disposal Facility

CAA .....Clean Air Act
CON .....Control Room

DAAMS .....Depot Area Air Monitoring System
DCLS .....detonation chamber lifting system
DCRS .....detonation chamber rotating system
DRE.....destruction and removal efficiency

EPA .....Environmental Protection Agency

°F .....degrees Fahrenheit
FPI.....feed prohibited interlock

HEPA .....high efficiency particulate air
HYPU.....hydraulic power unit

IAW.....in accordance with
ID .....induced draft
in .....inch

kg.....kilogram

LAMP .....Laboratory Analysis and Monitoring Plan
lbs.....pounds
lbs/hr .....pounds per hour
LDC.....lower detonation chamber
LQCP .....Laboratory Quality Control Plan

mg/m^3 .....milligram per cubic meter
mortars/hr.....mortars per hour

NEW .....net explosive weight

List of Acronyms and Abbreviations (Continued)

O_2 .....diatomic oxygen
OGT .....off-gas treatment

PDARS.....Process Data Acquisition and Recording System
PLC .....programmable logic controller
POHC.....Principle Organic Hazardous Constituent

QAPP .....Quality Assurance Project Plan
QP .....quality plant

RCRA.....Resource Conservation and Recovery Act

SAP .....Sampling and Analysis Plan
SDC.....static detonation chamber
SIC .....sulfur impregnated carbon

TNT.....trinitrotoluene

UDC .....upper detonation chamber
UPS .....uninterrupted power supply
US .....United States

WA.....Westinghouse Anniston
WMM.....waste military munition

1.0 EMISSIONS TESTING OVERVIEW

The United States (US) Army has designed and built a hazardous waste disposal facility for the destruction of the chemical munitions stockpile at Anniston Army Depot (ANAD) in Anniston, Alabama. The Anniston Chemical Agent Disposal Facility (ANCDF) is designed to dispose of chemical nerve agents, mustard agents, munitions containing agent, contaminated refuse, ton containers, liquid wastes, explosive, and propellant components. The ANCDF operates under Resource Conservation and Recovery Act (RCRA) Permit, AL3 210 020 027, issued pursuant to the Code of Alabama 1975 §§ 22-30-1-et. seq. Further references to this permit will be termed the RCRA Permit. ANCDF must also comply with its Clean Air Act (CAA) Permit.

It is anticipated that the ANCDF may encounter deteriorated mustard-filled projectiles and mortars that will be armed, fused and cannot be readily disassembled (separation of the explosives, agent, and munitions bodies to the existing three (3) incinerator systems) and processed at the ANCDF. The Static Detonation Chamber (SDC) System will allow ANCDF the ability to process intact explosively configured munitions. Under the requirements of the RCRA Permit and Alabama Department of Environmental Management (ADEM) regulations, the SDC System must demonstrate an ability to effectively treat any hazardous waste such that human health and the environment are protected.

ANCDF is proposing four (4) emissions tests for the SDC System.

- Conventional munitions emissions test without carbon in the safeguard filter system;
- Surrogate emissions test spiking a defined principle organic hazardous constituent (POHC) of monochlorobenzene, in addition to metal oxides without carbon in the safeguard filter unit;
- Surrogate emissions test spiking a defined POHC of monochlorobenzene, in addition to metal oxides with carbon in the safeguard filter unit; and
- Mustard-filled munitions emissions test with carbon in the safeguard filter unit.

ANCDF conducted an extensive review of energetic items in efforts to select items to conduct a test of the SDC which would most closely demonstrate the abilities of the system. Three (3) types of items were selected which when fed in combination allow for approximate demonstration of the upper energetic feed limitation and also allow for demonstration of the efficiencies of the effluent treatment process. There were no individual items identified that could simultaneously demonstrate the upper limit of the energetics feed rate and an increased contaminant feed rate. As a result, ANCDF identified these items, pyrotechnic items (to include smoke, flare and illuminating rounds, etc), and 60-millimeter (mm) explosive rounds that will provide a demonstration of the abilities of the system when fed in conjunction.

The conventional munitions emissions test will consist of a mixed feed of these items up to 68 pyrotechnic rounds and 24 60-mm rounds per hour and will demonstrate the processing ability of the system. Manufacturer specifications for the SDC allow for a single feed event to contain up to 6.7 pounds (lbs) of energetic material quantified in net explosive weight (NEW). For the conventional munitions emissions test, these items will be fed in combination to

approximately demonstrate the manufacturer's energetics limits and to further demonstrate the treatment efficiency of the off-gas treatment system.

Both surrogate emissions tests (with and without carbon in the safeguard filter unit) will be conducted while processing monochlorobenzene and metal oxides. Monochlorobenzene is a Class 1 compound indicating that it is in a group of chemicals that have strong chemical bonds that are difficult to incinerate based on US EPA's *Guidance on Setting Permit Conditions and Reporting Trial Burn Results*. Monochlorobenzene has been used at other chemical demilitarization facilities because it is more difficult to destroy than agents GB, VX and HD/HT.

The metals selected for spiking are in the metal oxide form. The metal oxides selected have boiling and/or melting points less than or equal to the operating temperature found in the SDC unit. In addition, the presence of monochlorobenzene (i.e., chlorine contributor) will serve to change the equilibrium chemistry such that the metals will volatilize at an even lower temperature and report to the gas stream providing a worst-case for metals emissions. In addition, metals removal efficiency will be determined by conducting the emissions test with and without carbon in the safeguard filter unit. The constituents that will be fed during the surrogate emissions testing are listed in Table 3.

Each of the surrogate emissions tests will consist of processing 105.6 lbs/hr of the monochlorobenzene with the purpose being to demonstrate a destruction and removal efficiency (DRE) of 99.9999%. Should < 99.9999% DRE be achieved no dioxin / furan forming waste will be processed without approval from the Department. The metal oxides listed in Table 3 will also be fed in conjunction with the monochlorobenzene.

The mustard-filled munitions emissions test will consist of processing up to 12 mustard-filled mortars within one (1) hour with the purpose being to demonstrate the DRE for mustard agent. The mustard-filled munitions emissions test will be completed to demonstrate the highest potential for agent feed to the unit under normal operations. Should ANCDF have completed the processing of mortars prior to the emissions test for the SDC, alternate mustard munitions currently maintained at ANAD may be used to perform the test. Each munition and the potential agent feed is identified in the table below. However, given that mustard munitions other than the mortars contain a higher energetic feed, a conventional emissions test is being performed to support the requested limits as proposed by the manufacturer.

The mustard filled munitions emissions test has been developed to establish an agent feed limitation and will also further demonstrate the efficiency of the OGT System.

The worst-case feed conditions for mustard agent will be established during the emissions test. Based on the following processing rates, the total agent and energetic feed rates per munition type is as follows:

The physical characteristics and composition of mustard agent that will be fed to the SDC is summarized in Table 1. For the purposes of this emissions test, HD and HT will not be considered individually. The average purity of mustard agent will be used to determine DRE based on programmatic information for agent lots in the ANCDF stockpile (see Appendix D).

The objectives for the SDC emissions testing are as follows:

- Demonstrate the DRE of greater than or equal to (≥) 99.9999 percent (%) for the defined POHC, monochlorobenzene (surrogate emissions tests ONLY);
- Establish maximum metals feed rates (surrogate emissions tests ONLY);
- Demonstrate the DRE of ≥ 99.9999% while processing 4.2-inch (in) mortars at a feed rate of up to 12 mortars per hour (mortars/hr) which is equivalent to 72 pounds per hour (lbs/hr) of mustard agent and/or 1.7 lbs/hr of energetics (mustard-filled munitions emissions test ONLY);
- Demonstrate allowable rolling average stack concentration for mustard agent of less than (<) 0.006 milligrams per cubic meter (mg/m^3) (mustard-filled munitions emissions test ONLY);
- Demonstrate allowable instantaneous stack concentration for mustard agent of < 0.03 mg/m^3 (mustard-filled munitions emissions test ONLY); and
- Demonstrate that emissions are less than the screening levels established in the Human Health Risk Assessment (ALL emissions tests).

Each emissions test will verify that the operation of the SDC System does not pose an unacceptable risk to public health and the environment while operating at normal conditions.

A minimum of three (3) valid test runs is required for each emissions test. If any test run is not executed under steady-state conditions, or if data is lost or compromised in any way, the results of that test run may or may not be included in the emission test report. If a test run is not completed, the abandoned test run will not be included in the emission test report. If a test run is completed and the data is lost or compromised, any available results will be included in the emission test report. An additional test run to replace the suspect test run may be executed. ANCDF Project Management, Environmental Management, along with ADEM, will make a determination as to the severity of the lost or compromised data to determine whether an additional test run needs to be performed.

Westinghouse Anniston (WA) has the responsibility for executing the emissions tests. The emissions sampling, packaging, transporting of samples to the off-site laboratories for analysis, and reporting the results will be in accordance with (IAW) the Sampling and Analysis Plan/Quality Assurance Project Plan (SAP/QAPP) (see Appendix A). The SAP/QAPP, documents the precision, accuracy, representativeness, completeness, and comparability of a data set, and assures the permit reviewer that the data is of sufficient quality for making regulatory decisions.

1.1 WASTE TREATMENT SYSTEM PROCESS AND FEED DESCRIPTIONS

The SDC System is designed to accept all munitions inventoried at the ANAD, including over packed munitions. Munitions in packages or overpacks and on feed trays up to 16-in x 16-in x

59-in can be accommodated. The system is designed to accept a maximum gross weight of up to ~ 330 lbs including the feed tray.

All materials fed to the system are fed in the original packaging. Removal of munitions from their packaging, such as overpacks or cardboard tubes, is not required. The handling for feeding is limited to moving the original packages to a feed tray placed on a feed conveyor. In the event that the munitions are not individually packaged, the process allows for loading the feed tray without the need for reconfiguring the SDC.

In addition, all types of explosive containing material such as small arms, projectiles, mines, rockets, grenades, pyrotechnics, and explosives contaminated material, toxic containing materials, fuses, detonators, etc., can be processed in the system as long as the following boundary conditions per feed cycle are not exceeded:

- Chemical agent ≤ 72 lbs/hr.,
- Chlorine < 11.1 lbs/event ,
- Sulfur < 6.3 lbs/event ,
- Non-Mass Detonating Explosives < 6.7 lbs/event ,
- Mass Detonating Explosives < 2.2 lbs/event,
- No shape charges unless shape charge function is defeated prior to feeding, and
- Overall weight < 330.7 lbs/event (including feed tray).

1.2 EMISSION TESTING SAMPLING AND ANALYTICAL PROTOCOLS

Detailed discussions of the sampling and analysis procedures and data quality objectives are provided in the SAP/QAPP, see Appendix A. The exhaust gas sampling and analytical methods to be used to quantify specific emissions test parameters are as follows:

- Depot Area Air Monitoring System (DAAMS) will monitor mustard agent to demonstrate that the DRE is ≥ 99.9999%.
- Mini-Automatic Continuous Air Monitoring System (ACAMS) or ACAMS will monitor for mustard agent at the common stack;
- US Environmental Protection Agency (EPA) Methods 1 and 2 will determine traverse sampling locations and flow rates;
- US EPA Method 3B will determine carbon dioxide and oxygen (O_2) levels using an Orsat. The O_2 levels will be used to adjust emission rates, as appropriate, to 7% O_2;
- US EPA Method 4 will determine moisture for the isokinetic sampling trains;
- SW-846 Method 0010 will determine semivolatile organic compound emissions;
- SW-846 Method 0023A will determine total dioxin/furan emissions;
- SW-846 Method 0031 will determine volatile organic compound emissions;
- SW0846 Method 0040, in conjunction with SW-846 Method 0010, will determine total organic compounds including semivolatile total organic compound, non-volatile total organic compound, and volatile total organic compound emissions,
- US EPA Method 26A, in conjunction with US EPA Method 5, will determine the acid gases and particulate matter emissions;

- US EPA Method 29 will determine trace metal emissions; and
- US EPA Modified Method 5 will determine energetic emissions.

2.0 DETAILED ENGINEERING DESCRIPTION

The SDC System is designed for destruction of munitions and munition components by indirect/conductive heating. The munitions are fed via a conveyor system. The solid scrap material remaining from the munitions is emptied into a scrap-box. The off-gas generated is cleaned and filtered in the OGT System.

The loading area is where munitions are placed in ammunition trays and loaded onto the loading conveyor. The loading conveyor is designed to accept multiple trays prior to any conveyor movement. After the loading conveyor is loaded, the loading operator leaves the area and the loading conveyor moves one (1) tray at a time into the SDC. As each item is conveyed from the loading room to the SDC for destruction the loading conveyor conveys it over to the munitions lift where it is elevated to the level of the first loading chamber. From the lift, the item is then conveyed to the apron of the first loading chamber.

At this point the loading system pauses until the Control Room (CON) operator acknowledges that the tray is ready to load into the SDC. All movements from the loading conveyor to the first loading chamber are automatic. However, the CON operator has full control of all movements and can abort or reverse the movements as required. The loading conveyor and lift are also equipped with guides, interlocks, and sensors that prevent misalignment of trays or other problems and will halt movements automatically if problems arise.

Once at the apron of the first loading chamber and after the operator gives the go-ahead for the loading operation, the first loading chamber gate is opened to admit the tray. The first loading chamber gate is equipped with an inflatable gasket seal which prevents leakage from the first loading chamber. After the gate is opened, the tray containing the munition item is pushed into the munition feed tray located in the first loading chamber by an electrically operated ram equipped with sensors to detect misfeeds and other problems. After the tray is inserted, the ram withdraws and the first loading gate is closed and sealed. Next the second feed gate (which is also fitted with inflatable seals to prevent leakage) opens and a hydraulically operated ram pushes the munition into the second loading chamber. The ram is withdrawn and the second loading gate closes. When needed, the first loading chamber may then be filled with flush tank solution to ensure that no air which may contain contamination remains in the first loading chamber. Air displaced by this operation is fed to the SDC main chamber for treatment. Flush tank solution may either be fed into the SDC for treatment or recycled back to the reserve flush tank for re-use.

To transfer the waste military munition (WMM) from the second loading chamber to the SDC, the cradle and fragment valve rotate 90 degrees (°) as a unit. The fragment valve is a round circular plug shaped device that is positioned above the entrance to the SDC to prevent fragments from impacting the second loading chamber. When rotated, the fragment valve moves out of the opening to the SDC and the cradle is aligned discharging the munitions to the SDC. Once the munitions have been delivered to the SDC, the cradle and fragment valve are rotated in the opposite direction, lining up the fragment valve over the opening to the SDC and the cradle to receive the next load. Once over the SDC, a hydraulic piston presses down on the fragment

valve to hold it in position. Loading chamber gates are configured and designed to contain detonations or fragments within them equal to the design limit of the rest of the chamber.

After the munitions are fed to the inner detonation chamber the items heat resulting in a detonation and/or deflagration. As there is insufficient air contained within the detonation chamber to support complete combustion of the detonation products, the result is a pyrolysis reaction, which breaks down the detonation gases to simple compounds which are then further treated in the OGT system.

A description of key equipment is provided below.

Conveyor System

The conveyor system is electrically powered and consists of:

- A series of conveyors which transport the ammunition trays to the lift;
- A Lift which lifts the trays up to loading chamber 1; and
- A electrical pusher which pushes the tray in to loading chamber 1.

Gate 1

Gate 1 is the inlet hatch to loading chamber 1. It is a sliding gate and operated hydraulically. The gate is sealed gastight with 1 pneumatic seal. An electric pusher is mounted on gate 1 which pushes the package into loading chamber 2. ***Loading Chamber 1***

Loading chamber 1 is a sluice part before loading chamber 2. Between loading chamber 1 and 2 there is a gastight gate. Loading chamber 1 may be filled with a water based flush tank solution after any loading sequence in order to evacuate gases to the treatment system.

Gate 2

Gate 2 is the inlet gate to loading chamber 2. It is a sliding gate and operated hydraulically. The gate is sealed gastight with 2 pneumatic seals. It is designed to withstand explosions up to 6.6 lbs TNT equivalent.

Loading Chamber 2 and Cradle

Loading chamber 2 has a built in hydraulic powered cradle. The cradle is designed to withstand the pressure and the fragments from the detonation chamber. When the tray has been pushed in loading position the cradle turns 90° in clock wise direction and the package falls down into the detonation chamber. The cradle then turns back and a fragment valve provides a fragment shield by means of a hydraulically operated cone that seals off loading chamber 2 against the SDC. Both positions of the cradle may be monitored by cameras so that both a successful loading of the tray and a successful fall into the SDC can be assured.

Destruction of munitions in the SDC

The munition is dumped into the detonation chamber and lands on the hot scrap material at the bottom of the chamber. The munitions are heated until, deflagration or detonation and the explosives in the munitions are destroyed. The destruction process is identified either by the dynamic pressure sensor and/or the static pressure sensor, aided by a sound sensor.

The heat is generated by heating elements in the space between the chamber and the shell. During the destruction process, pressure and temperature inside the SDC are monitored and

recorded in the CON. Heated sweep air is continuously added to the static kiln during operation. The gases from the destruction process will be transferred into and cleaned by the OGT system.

To eliminate potential overpressure peaks coming from the SDC, the off gases shall pass through a buffer tank in order to reduce such pressure peaks before the gases are transferred to the downstream OGT system.

Upper Detonation Chamber (UDC)

The upper part of the SDC is mounted to the outlet flange of loading chamber 2. Connections for incoming process air, outlet exhaust gases, temperature sensors and pressure gauges are placed on the SDCs upper part.

Lower Detonation Chamber (LDC)

The lower part of the SDC has an inner fragment shield and an outer chamber. The space between the chamber and scrap chute is filled with insulation. Electrical resistance heating elements are located in the bottom.

Elevating and Turning System

When emptying the LDC, it is first lowered by the hydraulically powered mechanical lifting jacks that make up the SDC lifting system (DCLS). The rotation of the LDC is made by a hydraulic motor, connected to the LDC with a chain which makes up the SDC Rotating System (DCRS).

Locking and Sealing System

The upper and lower parts of the SDC are locked to each other with a locking ring during destruction. The locking ring is maneuvered by two (2) hydraulic cylinders. For the emptying procedure the locking ring is turned to the open position and lower part of the SDC is lowered and turned. The connection between upper and lower part of the SDC is sealed by three (3) pressurized pneumatic gaskets during destruction.

Hydraulic Power Unit

The hydraulic power unit (HYPU) provides power to operate the following systems:

- The elevating and turning system for the SDC (DCLS)
- The tilting unit (DCRS)
- Gates 1 and 2
- The locking ring (DCLS)
- The pushers

It has a built in backup pump which is driven by the uninterrupted power supply (UPS) of the SDC facility.

Scrap Chute and Scrap Conveyor

When operators determine (based on the material being fed) the SDC should be emptied of treated material, the LDC is lowered and then turned 180° so the scrap material can fall down the scrap chute to the scrap conveyor.

Scrap Conveyor System

Scrap conveyor 1 transports the scrap material to scrap conveyor 2. Scrap conveyor 2 moves the scrap onto the vibration table. Scrap conveyor 1 and 2 are slow moving and allow the scrap to cool to a temperature where the material may be inspected. The vibration table distributes the scrap evenly and delivers it onto the scrap inspection conveyor. It also separates dust from the scrap which is collected underneath in a basket. The scrap inspection conveyor allows visual inspections of WMM after treatment has occurred in the SDC.

Detonation Chamber Air Heater

The air heater heats the process air. This hot air is led into the SDC to aid the destruction process.

Reserve Flush Tank

The reserve tank contains the water based solution which may be used to flush loading chamber 1 as needed after any loading sequence. Process air provides the needed pressure to drive the solution into loading chamber 1. When necessary, the solution can be emptied from loading chamber 1 into the SDC for destruction. Otherwise it will flow back into the reserve flush tank.

Off-Gas Treatment System

The OGT system consists of a buffer or equalization tank which smoothes out pressure pulses caused by detonation within the SDC, followed by an orifice which also helps to smooth the flow going to downstream components of the system. Following the orifice, the gas is heated to approximately 2,000° Fahrenheit (F) for at least 2 seconds, then cooled by a quench followed by a dry scrubber filter and then remaining contaminants are removed by two (2) wet scrubber stages. The last step is a multistage exhaust filtration system, which acts as a safeguard backing up the OGT system before releasing the off gas to the environment. It should be noted that the entire OGT system from the exit of the SDC to the thermal oxidizer is maintained at adequate temperature to reduce condensation. Descriptions of these items are provided below.

Buffer Tank

This unit is designed to smooth gas pressure and volume surges from the SDC that occur whenever a munition detonates or deflagrates within the SDC. By smoothing surges the design of downstream equipment is simplified and the equipment is better able to operate near its optimum design flow rate. This allows more consistent removal of contaminants. The buffer tank is comprised of a cone bottom cylindrical tank made of stainless steel. The inlet and outlet of the tank is configured in such a way that the tank also acts as a cyclone, allowing the removal of large particles of ash and small metal fragments from detonations. These materials are collected in the bottom of the conical tank section and are periodically and automatically removed using a lock hopper type rotary valve for recycle to the SDC. The entire tank and all piping are maintained at a temperature using electric heaters and insulation.

Orifice

The orifice plate also helps to smooth the flow of gases presented to downstream equipment. The orifice plate is comprised of a sharp edged orifice located in a stainless steel metal plate which is in turn sandwiched between two (2) pipe flanges. This plate is replaceable if needed, and is also maintained at temperature using electric heaters and insulation.

Process Ventilation Cyclone, Filter, and Fan

The fan drives the process ventilation for the SDC. The cyclone and filter remove dust from the process ventilation. The dust is transferred to the air mainly from the scrap emptying sequence and the scrap conveyor system.

Thermal Oxidizer

The off gases resulting from the pyrolysis process in the SDC are transferred to a thermal oxidizer. The thermal oxidizer is designed to accept all gases resulting from one (1) feed cycle to the SDC. The thermal oxidizer is oversized for this peak flow and is actually able to accommodate twice the flow that is anticipated. The OGT is sufficiently designed to accommodate feed rates greater than the design for the SDC.

The thermal oxidizer uses natural gas or propane as a fuel to enable the development of the high temperatures required. The thermal oxidizer design is based on a retention time of two (2) seconds or more at approximately 2,000°F for the peak load expected from the upstream SDC. An additional flow of secondary air is automatically added to ensure an oxidizing environment. The gases to be treated are fed tangentially via a ring system to ensure proper treatment of the contaminated gases.

Spray Dryer

The off gas coming from the thermal oxidizer exits with a temperature of approximately 2,000°F. This off gas is quickly cooled to approximately 350°F by the injection of water into the gas stream. The injected water will evaporate and the energy needed for the evaporation is taken from the off gas so that the gas will rapidly cool. The water injection or quench takes place in a spray dryer that is positioned at the inlet of the next treatment stage, the acid scrubber. The spray dryer uses spent scrubber liquids for the water feed and subsequently evaporates this water, leaving dry salts and particulates for disposal and removing the need for a water treatment system to process spent scrubber solutions. The dry salts and particulates are automatically removed from the bottom of the spray dryer and collected in a container using a rotary lock hopper type valve for disposal.

Bag House Filter

A bag house filter is located after the spray dryer. This unit is comprised of a filter system where the bags have a layer of absorbent material added to them which is automatically renewed on a periodic basis. Most of the dust and heavy metals are removed in this unit. The removal occurs in a zone on the inside of the bags where an absorbent lime/activated carbon mixture is added. The ratio of the material may be adjusted to fit the application. The powdered mixture is fed continuously from a hopper by a screw feeder and pneumatic feed system to the baghouse where it adds to the layer of spent material on the inside of the bags. This allows a fresh surface to be presented to the incoming gases at all times. Periodically when the pressure drop across the filter

exceeds a set point, the bags are emptied using a pulse jet, and the spent solids with the collected process dust is processed through a rotary lock hopper valve into a drum for disposal.

Quench Venturi

In the next step the air is cooled from approximately 350 to 170°F. This is done with scrubber solution water from the acid scrubber. The water remaining from this step is cooled and recycled to the acid scrubber sump.

Acid Scrubber

The off gas in the acid scrubber will be further cooled to the operating temperature of the scrubber, which is approximately 150°F. The acid scrubber is a counter current design where the scrubber liquid flows counter current to the gas flow. The acid scrubber will remove several contaminants from the off gas. Initially, dust is removed by washing out solid particles in the washing tower. Acid gases, volatile and semi-volatile heavy metals will also be removed from the off gas. These components will dissolve in the scrubber liquid making it acidic. The scrubber pH will be controlled by a pH controller that ensures that the liquid has a sufficiently high pH value to obtain the necessary concentration gradient to wash the gases. The resistivity of the scrubber liquid will be monitored. In case of a low resistivity value indicating a high dissolved salt content the scrubber liquid will be partly replaced by fresh water. Excess scrubber liquid is then transferred to the spray dryer for evaporation and salt removal. Scrubber liquid is pumped from the bottom of the scrubber column to the top and is distributed inside the column by spray nozzles. The off gas enters the column from a position located just above the column sump and streams from the bottom to top of the column. In order to ensure an adequate mixing and contact between the liquid and the gas, the columns are filled with a column packing material. As a safeguard, the temperature of the off gas inlet will be monitored. In case of a high temperature off gas, due to a quench malfunction, an emergency water injection will be switched on.

Neutral Scrubber

After the acid scrubber the off gas is fed to the neutral scrubber. The neutral scrubber removes any residual contaminants that passed through the dry and acid scrubbers. The neutral scrubber has the same dimensions and is built using the same construction principles as the acid scrubber. The neutral scrubber also operates with a counter current gas liquid flow. To obtain a good material exchange between the gas and the liquid, a column packing is used.

The scrubber liquid is monitored by a pH controller. Two (2) solutions may be used to maintain the proper neutral pH. One (1) is a sodium hydroxide solution and the other is a hydrogen chloride solution. The amount of scrubber liquid in the neutral scrubber is controlled by a level transmitter in the sump of the scrubber column.

To obtain a constant quality in the scrubber a continuous waste stream is taken out through the column sump, which goes into the spray dryer. This stream is replaced by fresh caustic solution as needed.

Induced Draft (ID) Fans

The ID fans are located downstream after the particle filter. The ID fans ensure that the pressure of the off gas is slightly below atmospheric pressure. The pressure is controlled by pressure transmitters. The speed of the ID fans is adjustable by a frequency controller. The control of the

pressure ensures that no contaminated off gas above emissions limitations is released into the environment. The ID fans work continuously during the operation of the plant. Two (2) redundant fans are installed. If one (1) fails, the other will automatically take over.

Safeguard Filter

All gases exiting the OGT system are transferred to a final safeguard filter system. The system provides positive backup capacity to the main OGT in the event of system malfunction per the requirements of DA PAM 385-61. The safeguard system is an exhaust filtration unit. The exhaust unit is designed and built IAW the requirements by the US Army's Chemical Demilitarization program. The filter system is designed as a series of filters each performing a duty as described below:

- Prefilter: removes particulates remaining in the gas stream that may cause blinding or clogging of the down stream high efficiency particulate air (HEPA) filter;
- HEPA: removes particulates down to 0.3 microns; and
- Charcoal: removes contaminants such as volatile and semi-volatile heavy metals;
- A space is included between the charcoal filters which allows for monitoring;
- Charcoal: serves as a backup for the first charcoal filter described above;
- HEPA: ensures that there are no emissions of potentially contaminated particulates released to the atmosphere; and
- Charcoal filters may or may not be used during conventional WMM treatment.

The exhaust filter system housings are made of stainless steel and are equipped with differential pressure monitors on all filters to ensure adequate flow and to monitor for when a filter needs to be replaced. Filters within the unit use a bag in / bag out system so that the operator changing the filters never comes in contact with the actual filter media. The systems include an ID fan to provide negative pressure in the system to protect against leakage.

Stack

The stack for discharge of cleaned gases meets the requirements of the American Conference of Governmental Industrial Hygienist industrial ventilation manual.

3.0 DESCRIPTION OF FEED PROHIBITED INTERLOCK SYSTEM

The primary function of the Feed Prohibited Interlock (FPI) System is to prevent the feeding of munitions if SDC conditions are outside the manufacturer's recommendations. During upset conditions, the FPI System automatically prohibit the transfer of munitions, mustard-filled or conventional WMM, from loading chamber 1 to 2 until all conditions are met or within range. Instrumentation is provided to monitor process conditions, provide data for ensuring compliance with regulatory requirements, appropriate process response and control needs, and operational flexibility, safety interlocking, and shutdown features (see Appendix E).

An automatic control system is used with a centralized control console (including closed-circuit television monitors for observing operations at various locations) and locally mounted programmable logic controllers (PLCs). SDC processing and sequencing operations are controlled automatically through a dedicated PLC. Interlocks are monitored and continuous

checking is undertaken to determine any lack of completion of a programmed step. All upset conditions, operator entries into the system, and starting and stopping of equipment are logged with the time of occurrence by the Process Data Acquisition and Recording System (PDARS). The PLCs provide continuous automatic control of the incineration process. Interlocks are provided to respond to various conditions. Shutdowns are either immediate or in stages, depending upon the situation.

4.0 EXHAUST GAS MONITORING EQUIPMENT

The SDC System exhaust gases are monitored for agent and non-agent constituents. Agent constituents are monitored by mini-ACAMS, ACAMS, or DAAMS. The DAAMS are also used for monitoring agent emissions, verifying the presence of agent emissions, and/or used to determine the DRE during the emission test.

The ANCDF Laboratory Analysis and Monitoring Plan (LAMP) describes the operation of the agent monitoring systems. The systems have undergone extensive testing and evaluation under both simulated and actual field conditions. The precision and accuracy of each agent monitoring system is determined through actual on-site testing. The agent monitoring systems are brought online before feed is initiated.

The mini-CAMS or ACAMS monitor the stack gases for the presence of agent in a qualitative and quantitative manner consistent with its near real time method of analysis. Quality control limits, calibration and challenge frequencies and operating/maintenance requirements are delineated in the ANCDF Laboratory Quality Control Plan (LQCP).

The DAAMS tubes are used to monitor the stack gases for the presence of agent in a qualitative and quantitative manner consistent with gas chromatography, and if necessary, by mass spectrometer analysis. Quality control limits, calibration and challenge frequencies, and operating/maintenance requirements are delineated in the ANCDF LQCP.

A DAAMS station will be used during the emission test to determine DRE. The DAAMS tubes will be changed out on a four (4)-hour basis. The mass found will be totalized to produce a total mass quantity. In addition, a quality plant (QP) sample DAAMS tube will be run concurrent with the DRE DAAMS tube. Prior to conducting and after completion of each test run, a probe flow check will be conducted.

5.0 LOCATION AND DESCRIPTION OF THE PROCESS CONTROL SYSTEM

The proper operation of the process control system is necessary to ensure consistent compliance with all RCRA and CAA Permit conditions and safe, efficient operation of the SDC System. The CON is the remote location where the SDC System is normally operated. The CON houses an operator control console, which includes closed-circuit television monitors for observing operations at various locations, as well as emergency shutdown controls. All remote operations, with exception of emergency shutdown, are performed through an operator keyboard using the equipment controls and indications displayed on advisor screens. Processing and sequencing operations are controlled automatically through the PLC, which continuously communicates with the operator console in the CON. The automatic control system provides continuous automatic control of the treatment process.

The PLC is also connected to a dedicated alarm concentrator that is programmed to continually scan for alarm conditions and to initiate alarms in the CON, alerting the operator of abnormal conditions. The process control software was designed to provide pre-alarms in the CON. These pre-alarms are used to warn the CON operator in time to take corrective action should a process variable approach a waste feed cutoff or equipment shutdown condition.

The PDARS logs and notes the time of all abnormal conditions, as well as the starting and stopping of equipment and operator entries. This system is also used to record process data such as temperature, pressure, and waste feed intervals. PDARS records data at varying intervals. The PDARS takes instantaneous readings at a maximum interval of fifteen seconds and records averages on a one (1)-minute basis. All PDARS data collected for RCRA/CAA instrumentation is included in the ANCDF operating record as required by the CAA/RCRA Permits and applicable regulations.

6.0 STARTUP/SHUTDOWN PROCEDURES

The SDC System will be brought up to normal operating conditions before introducing any munitions into the chamber. The phrase "normal operating condition" means that detonation temperatures are above the minimum for initiating feed, the SDC System is under negative pressure, and in compliance with all other regulatory limits. Before any SDC System processing equipment can be started, all utilities, including the automatic control system, must be operational per WA procedures.

FPIs are continuously monitored and interlocked, and will be in operation during the emission test. In addition, the system's operation will be monitored by the system operators. If the operation of the system should deviate significantly from the desired range of operation or become unsafe, the operators will manually secure feed to the SDC System. In the event of a major equipment or system failure, it may be necessary to shut down the SDC System completely. A shutdown of this type will be performed IAW the WA standard operating procedures.

7.0 SAMPLING AND ANALYSIS PROCEDURES

A detailed description of the sampling and analysis performed by the sampling contractor during the emission test is provided in Appendix A (SAP/QAPP).

8.0 SAMPLING LOCATIONS

During this emission test, there will be three (3) mini-ACAMS or ACAMS and three (3) DAAMS stations at the exhaust blower duct location in order to sample the exhaust gas stream continuously.

9.0 SCHEDULE

The SDC emission test could be executed as early as mid-year 2010. The submittal of this plan will serve as the official six (6) month ADEM notice required for test plans. Thirty days prior to the emission test, ADEM will be notified of the intended execution date.

The emissions tests will commence after ANCDF has received approval of this plan and has successfully completed shakedown of the SDC System. The emissions testing conditions may be conducted as a separate testing event or grouped as a concurrent event. If conducted separately, the activities will span approximately six (6) days including: one (1) day for preparation, four

(4) days for testing, and one (1) day for clean-up. Similarly, if the emissions test conditions are conducted as a concurrent event, each would have four (4) days of testing with shared preparation and clean-up days.

The emission test will consist of a minimum of three (3) valid test runs. One (1) run per day is planned. The exhaust gas stream will be sampled until a minimum of three (3) cubic meters is collected or approximately four (4) hours. This, combined with port changes, will cause total test time each day to be at least six (6) hours. Assuming minimal interruption of SDC System operation during the emission test, the SDC System is expected to operate for eight (8) or more hours per test day. A fourth test run may be conducted at the discretion of the ANCDF management.

10.0 RAMP-UP PERIOD

The principal objective of the ramp-up period is to prepare the SDC System to safely process the munitions. Preparations also include familiarizing site personnel with the operation of the SDC System. This objective will be completed within the operating parameters and performance standards specified in the RCRA/CAA Permits. The ramp-up period will also provide real-time information to verify that the SDC System is capable of processing mustard agent feed while maintaining the necessary levels of safety and protection of the environment. Up to a total of 720 hours of operating time processing munitions through the SDC System is allowed to complete this period.

11.0 EMISSIONS TEST PERIOD

From the initiation of the first test run to the completion of the last test run, the SDC System will be within an emissions test period and hours of operation will not be considered shakedown hours.

12.0 POST-TEST PERIOD

For the duration of the post-trial period, the SDC System will be operated in compliance with the performance standards listed in the RCRA Permit. The post-test period includes two (2) phases. Phase 1 spans between the completion of the last valid test run to the approval of the preliminary emissions test report. Upon approval of the preliminary emissions test report until approval of the final report, the mustard agent feed rate will be limited to that demonstrated during the SDC emissions test.

13.0 EMISSIONS TEST RESULTS

A final emissions test report must be submitted to ADEM documenting that the SDC emissions test has been carried out IAW the approved ANCDF SDC Emissions Test Plan within 60 days after completion of the last test run. All data and analyzed sample results from the emission test will be submitted in the final emission test report. A preliminary emission test report addressing demonstration of the intended performance standards or objectives will be submitted approximately 20 working days following the completion of the last test run.

14.0 FINAL PERMIT LIMITS

With the exception of agent and metals feed rates, all operating parameters are considered manufacturer's recommendation and will not be established only demonstrated.

Footnotes:
(1) Data from Material Safety Data Sheet.
(2) These numbers are given as a guide only and do not represent product specifications or the exact constituency of the mustard agent.

Abbreviations:
%..... percent
gm/cc ..... gram per cubic centimeter
°C ..... degrees Celsius
Btu/lb.....British thermal units per pound
mmHg.....millimeters of mercury
sgu .....specific gravity units

Table 2: FPI Conditions for Mustard and Conventional WMM(1)

Item No.	Instrument Tag Number	Process Data Description	Range	Parameter
SDC-FPI-01	PI 12007	Detonation Chamber Static Pressure Indication	MAX	362 psi
SDC-FPI-02	TI 12021	Detonation Chamber Temperature Indication	MIN	1,000°F (Permit Required Temperature)
SDC-FPI-03	TICS 310 AVG	Thermal Oxidizer Temperature	MIN	1,400° F (Permit Required Temperature)
SDC-FPI-04	PICS 310 AVG	Thermal Oxidizer Pressure	MAX	0.0 psi
SDC-FPI-05	TICS 320 AVG	Spray Dryer Temperature	MAX	500° F
SDC-FPI-06	PDS 33001	Bag-house Differential Pressure	MAX	0.3 psi
SDC-FPI-07	FIA 34204	Acid Scrubber Process Flow	MIN	1.0 cf/m
SDC-FPI-08	FIS 34203	Quench Tower Flow	MIN	0.5 cf/m
SDC-FPI-09	TIS 34003, 34004	Quench Tower Temperature	MAX	190°F
SDC-FPI-10	TIA 37002	Neutral Scrubber Discharge Temperature	MAX	200°F
SDC-11	SDC 038 A/B/C	Chemical Agent Emissions (OGT Stack)	MAX	0.03 mg/m^3 (instantaneous)
SDC-12	SDC 038 A/B/C	Chemical Agent Emissions (OGT Stack)	MAX	0.006 mg/m^3 (ROHA)
SDC-13	AAHH-900	CO Concentration	MAX	100 ppm, dry basis @ 7% O_2 (ROHA)

Footnote:
(1) Operational parameter(s) interlock will prohibit the transfer from loading chamber 1 into chamber 2 until all conditions are met or within range.

Abbreviations:
% ..... percent
°F ..... degrees Fahrenheit
FPI ..... feed prohibited interlock
MAX ..... maximum
MIN ..... minimum
ppm ..... parts per million
ROHA ..... rolling hourly average
TBD ..... to be determined
@ ..... at
CO ..... carbon monoxide
cf/m ..... cubic foot per minute
mg/m^3 ..... milligrams per cubic meter
O_2 ..... oxygen
psi ..... pounds per square inch
SDC ..... Static Detonation Chamber
WMM ..... waste military munition

Abbreviations:
lbs/hr ..... pounds per hour
ROHA ..... rolling hourly average

APPENDIX A: SAP/QAPP

APPENDIX B: MATERIAL AND ENERGY BALANCE

APPENDIX C: EXAMPLE DRE CALCULATIONS

Parameter	Units	Value
HD Agent		
Exhaust Gas Flow Rate(1)	scm/hr	1091
Total Agent From DAAMS Tubes	ng	< 4.60E-01
Total Gas Sampled	lpm	2.00E-01
Total Gas Sampled	scm	4.80E-02
Percent Exhaust Gas Sampled	%	8.0
Total Exhaust Gas Sampled	scm	3.84E-03
Agent Concentration	mg/scm	< 1.20E-04 [ND]
Emission Rate (W_{out})	lbs/hr	< 2.88E-07 [ND]
DRE [((W_{in} - W_{out})/W_{in})*100]	%	> 99.9999995
Monochlorobenzene		
Exhaust Gas Flow Rate(1)	scm/hr	1,091
Total Monochlorobenzene	ng	< 80
Total Gas Sampled	dscm	8.00E-02
Monochlorobenzene Concentration	ug/scm	< 1.00E+00 [ND]
Emission Rate (W_{out})	lbs/hr	< 2.41E-06 [ND]
Monochlorobenzene Feed Rate	lbs/hr	105.6
Monochlorobenzene Purity(3)	%	98%
Purity-Adjusted Feed Rate (W_{in})	lbs/hr	103.5
DRE [((W_{in} - W_{out})/W_{in})*100]	%	> 99.999997

Footnotes:
(1) Flow rate based on the draft mass and energy balance, see Appendix B.
(2) Value based on the average purity listed in the ANCA Stockpile Tracking System for 4.2-inch mortars and projectiles, see Appendix D.
(3) Provided by manufacturers specifications.

Abbreviations:
%.....percent
DRE.....destruction and removal efficiency
lbs/hr.....pounds per hour
lpm.....liters per minute
mg/scm.....milligrams per standard cubic meter
ng.....nanograms
scm.....standard cubic meters
scm/hr.....standard cubic meters per hour
ug/scm.....micrograms per standard cubic meter

Source: Extracted form Stockpile Tracking System and Environmental Impact Statement, Enclosure No. 2

APPENDIX E: CMS PLAN

This document contained Export Control/International Traffic in Arms Regulations Information.

Appendix D-5: **Anniston Chemical Agent Disposal Facility, Static Detonation Chamber, Emissions Test Report, Condition 4b, Revision 0, October 2011**

ANCDF Final SDC Emissions Test Report (C4b), Revision 0, October 2011

This document was reviewed by RWR and no OPSEC-sensitive information was discovered.

This document has been reviewed for ITAR/EAR and no ITAR/EAR sensitive information was found.

ANNISTION CHEMICAL AGENT DISPOSAL FACILITY
FINAL STATIC DETONATION CHAMBER
EMISSIONS TEST REPORT

CONDITION 4b

Revision 0, October 2011

PREPARED BY:

Westinghouse Anniston
Trial Burn Department
3580 Morrisville Road
Anniston, AL 36201

PREPARED FOR:

Chemical Materials Agency
Anniston Field Office
3580 Morrisville Road
Anniston, AL 36201

SUBMITTED TO:

Alabama Department of Environmental Management
1400 Coliseum Boulevard
Montgomery, AL 36110-2059
Attn: Gerald Hardy

RCRA Permit Controlled Document

TABLE OF CONTENTS PAGE

ES.1 OVERVIEW ES-1

ES.2 SAMPLING METHODS ES-2

ES.3 DAILY RUN SUMMARIES ES-2

ES.4 PERFORMANCE STANDARDS ES-3

ES.4.1 Select Criteria Pollutant Emissions ES-3

ES.4.2 DRE ES-4

ES.4.3 Semivolatile Organic Emissions ES-4

ES.4.4 Dioxin/Furan Emissions ES-4

ES.4.5 Volatile Organic Emissions ES-4

ES.4.6 TOC Emissions ES-5

ES.4.7 Acid Gases and Particulate Emissions ES-5

ES.4.8 Trace Metal Emissions ES-5

ES.4.9 Energetic Emissions ES-5

ES.5 FEED PROHIBITVE INTERLOCK LIMITS ES-5

ES.5.1 Maximum Detonation Chamber Pressure (SDC-01) ES-6

ES.5.2 Minimum Detonation Chamber Temperature (SDC-02) ES-6

ES.5.3 Minimum Thermal Oxidizer Temperature (SDC-03) ES-7

ES.5.4 Maximum Thermal Oxidizer Pressure (SDC-04) ES-7

ES.5.5 Maximum Spray Dryer Temperature (SDC-05) ES-8

ES.5.6 Maximum Bag House Pressure (SDC-06) ES-8

ES.5.7 Minimum Acid Scrubber Flow Rate (SDC-07) ES-9

ES.5.8 Minimum Quench Tower Flow Rate (SDC-08) ES-9

ES.5.9 Maximum Quench Tower Temperature (SDC-09) ES-10

ES.5.10 Maximum Neutral Scrubber Temperature (SDC-10) ES-10

ES.5.11 Maximum Chemical Agent Emissions (SDC-11/12) ES-11

ES.5.12 Maximum CO Concentration (SDC-13) ES-11

ES.6 PROPOSED FEED RATES ES-11

ES.7 DATA FOR USE IN THE HRA ES-11

ES.8 FINAL CONCLUSIONS ES-11

1.0 INTRODUCTION 1-1

1.1 GENERAL FACILITY INFORMATION 1-1

1.2 DATE AND TIMES OF SDC EMISSIONS TESTING 1-2

1.3 PROJECT PARTICIPANTS 1-2

TABLE OF CONTENTS (Continued) PAGE

2.0 PROCESS DESCRIPTION 2-1

2.1 DESCRIPTION OF THE SDC SYSTEM 2-1

2.2 SUMMARY OF PROCESS MONITORS AND FLUE GAS ANALYZERS 2-6

2.2.1 Location and Description of the Process Control System 2-6

2.2.2 Flue Gas Monitoring 2-6

3.0 TESTING PROGRAM OVERVIEW 3-1

3.1 SDC EMISSIONS TESTING OBJECTIVES 3-1

3.2 PLANNED EMISSIONS TESTING PROGRAM 3-1

3.3 SUMMARY OF ACTUAL TESTING PERFORMED 3-1

4.0 FEED PROHIBITIVE INTERLOCKS 4-1

4.1 FEED RATES 4-1

4.2 EXHAUST GAS PARAMETERS 4-1

4.2.1 Exhaust Gas Temperature 4-1

4.2.2 Exhaust Gas Velocity 4-1

4.2.3 APCE Control Parameters 4-1

4.2.4 CO Concentration 4-1

4.3 FUGITIVE EMISSION SOURCES 4-2

5.0 EXHAUST GAS SAMPLING 5-1

5.1 FIELD PROGRAM DESCRIPTION 5-1

5.2 PRESAMPLING ACTIVITIES 5-2

5.2.1 Equipment Calibration 5-2

5.2.2 Glassware Preparation 5-3

5.2.3 Sample Media Preparation 5-3

5.3 SAMPLING METHODS 5-3

5.3.1 US EPA Methods 1 and 2 5-3

5.3.2 US EPA Method 3B 5-4

5.3.3 US EPA Method 4 5-4

5.3.4 US EPA Method 6C 5-5

5.3.5 US EPA Method 7E 5-5

5.3.6 US EPA Method 10 5-5

5.3.7 SW-846 Method 0010 5-6

5.3.8 SW-846 Method 0010 for TOCs 5-7

5.3.9 SW-846 Method 0023A 5-8

5.3.10 SW-846 Method 0030 5-9

5.3.11 SW-846 Method 0040 5-9

5.3.12 US EPA Method 26A 5-10

TABLE OF CONTENTS (Continued) PAGE

5.3.13 US EPA Method 29 5-11
5.3.14 US EPA Modified Method 5 5-12

6.0 ANALYTICAL PROCEDURES 6-1

6.1 SUMMARY OF ON-SITE ANALYTICAL PROCEDURES 6-1
6.1.1 O_2 and CO_2 6-1
6.1.2 SO_2 6-1
6.1.3 NO_x 6-1
6.1.4 CO 6-2
6.1.5 Volatile TOCs 6-2
6.1.6 Mustard Agent in Exhaust Gas 6-2
6.2 SUMMARY OF OFF-SITE ANAYTICAL PROCEDURES 6-3
6.2.1 Semivolatile Organics 6-3
6.2.2 Dioxins/Furans 6-4
6.2.3 Volatile Organics 6-4
6.2.4 Total Volatile, Semivolatile, and Nonvolatile Organics 6-5
6.2.5 Acid Gases 6-6
6.2.6 Particulates 6-6
6.2.7 Trace Metals 6-6
6.2.8 Energetics 6-7

7.0 QA/QC RESULTS 7-1

7.1 LABORATORY QUALIFICATIONS AND ANALYTICAL STANDARDS 7-1
7.1.1 Data Validation 7-1
7.1.2 Data Reporting 7-1
7.2 FIELD QC SUMMARY 7-1
7.2.1 Calibration Procedures 7-1
7.2.2 Equipment Leak Checks 7-2
7.2.3 Field Blanks 7-2
7.3 SAMPLE MANAGEMENT 7-2
7.3.1 Sample Preservation 7-2
7.3.2 Sample Traceability 7-2
7.3.3 Sample Transportation and Receiving 7-3
7.3.4 Sample Shipping 7-3
7.3.5 Sample Holding Times 7-3
7.3.6 COC Documentation 7-4
7.4 SAMPLE COLLECTION 7-4
7.4.1 Isokinetic Sampling 7-5

TABLE OF CONTENTS (Continued) PAGE

7.4.2 Non-Isokinetic Sampling 7-6
7.5 DATA VALIDATION RESULTS 7-9
7.5.1 Semivolatile Organics 7-10
7.5.2 Semivolatile and Nonvolatile TOCs 7-13
7.5.3 Dioxins/Furans 7-15
7.5.4 Volatile Organics 7-17
7.5.5 Volatile TOCs 7-22
7.5.6 Acid Gases 7-25
7.5.7 Particulates 7-26
7.5.8 Trace Metals 7-26
7.5.9 Energetics 7-29
7.5.10 Mustard 7-30
7.6 CONCLUSIONS 7-31
7.6.1 Comparability of Analytical Data 7-31
7.6.2 Representativeness of Analytical Data 7-31
7.6.3 Completeness of Analytical Data 7-31
7.6.4 Analytical Data Usability 7-31

8.0 TRIAL BURN RESULTS SUMMARY 8-1

8.1 DAILY RUN SUMMARIES 8-1
8.2 CYCLONIC FLOW CHECK 8-2
8.3 PERFORMANCE STANDARD RESULTS 8-2
8.3.1 Select Criteria Pollutant Emissions 8-2
8.3.2 DRE 8-2
8.3.3 Semivolatile Organic Emissions 8-3
8.3.4 Dioxin/Furan Emissions 8-3
8.3.5 Volatile Organic Emissions 8-3
8.3.6 TOC Emissions 8-3
8.3.7 Acid Gases and Particulate Emissions 8-3
8.3.8 Trace Metals Emissions 8-3
8.3.9 Energetic Emissions 8-4
8.4 FEED PROHIBITIVE INTERLOCKS 8-4
8.4.1 Maximum Detonation Chamber Pressure (SDC-01) 8-4
8.4.2 Minimum Detonation Chamber Temperature (SDC-02) 8-5
8.4.3 Minimum Thermal Oxidizer Temperature (SDC-03) 8-5
8.4.4 Maximum Thermal Oxidizer Pressure (SDC-04) 8-6
8.4.5 Maximum Spray Dryer Temperature (SDC-05) 8-6
8.4.6 Maximum Bag House Pressure (SDC-06) 8-7

TABLE OF CONTENTS (Continued) PAGE

8.4.7 Minimum Acid Scrubber Flow Rate (SDC-07) 8-7
8.4.8 Minimum Quench Tower Flow Rate (SDC-08) 8-7
8.4.9 Maximum Quench Tower Temperature (SDC-09) 8-8
8.4.10 Maximum Neutral Scrubber Temperature (SDC-10) 8-8
8.4.11 Maximum Chemical Agent Emissions (SDC-11/12) 8-9
8.4.12 Maximum CO Concentration (SDC-13) 8-9
8.5 PROPOSED FEED RATES 8-9
8.6 DATA FOR USE IN RISK ASSESSMENT 8-10
8.7 FINAL CONCLUSIONS 8-10

LIST OF FIGURES PAGE

1-1 Organizational Chart 1-3
5-1 Traverse Point Locations for the SDC Exhaust Duct 5-14
5-2 SW-846 Methods 0010 and 0023A Sampling Train 5-16
5-3 SW-846 Method 0030 Sampling Train 5-17
5-4 SW-846 Method 0040 Sampling Train 5-18
5-5 US EPA Method 26A Sampling Train 5-19
5-6 US EPA Method 29 Sampling Train 5-20
5-7 US EPA Modified Method 5 Sampling Train 5-21

LIST OF TABLES PAGE

ES-1 Sampling Time Intervals ES-13
ES-2 Summary of Select Criteria Pollutant Emissions ES-13
ES-3 Summary of DRE ES-13
ES-4 Summary of Semivolatile Organic Emissions ES-14
ES-5 Summary of Dioxin/Furan Emissions ES-18
ES-6 Summary of Volatile Organic Emissions ES-19
ES-7 Summary of TOC Emissions ES-21
ES-8 Summary of Acid Gases and Particulate Emissions ES-21
ES-9 Summary of Trace Metals Emissions ES-22
ES-10 Summary of Energetic Emissions ES-23
2-1 FPI Conditions for Mustard and Conventional WMM 2-7
3-1 Sampling Matrix for Exhaust Gas 3-2
3-2 Deviation Summary 3-3
4-1 Summary of FPI Parameters 4-3
4-2 Summary of Tray Weights and Time Intervals 4-5
4-3 Chloride/Metals Feed Rate Determination 4-8
5-1 Calibration Procedures for Equipment 5-21

LIST OF TABLES (Continued) PAGES

5-2 Isokinetic Sampling Train Summary 5-22
5-3 Non-Isokinetic Sampling Train Summary 5-23
7-1 Field and Laboratory Sample Identification Cross Reference Guide 7-32
7-2 Leak Checks 7-39
7-3 Semivolatile Organic Sample Holding Time Summary 7-40
7-4 Semivolatile Surrogate Standard Results 7-41
7-5 Semivolatile LCS Results 7-42
7-6 Semivolatile TOC Holding Time and Surrogate Standard Results 7-42
7-7 Semivolatile TOC LCS Results 7-43
7-8 Dioxin/Furan Sample Holding Time Summary 7-43
7-9 Dioxin/Furan Internal and Surrogate Standard Results 7-44
7-10 Dioxin/Furan LCS Results 7-45
7-11 Volatile Holding Time Summary and Surrogate Standard Results 7-46
7-12 Volatile LCS Results 7-48
7-13 Volatile TOC Condensate Holding Time Summary and Surrogate Standard Results 7-49
7-14 Volatile TOC Field Spike Results 7-49
7-15 Volatile TOC LCS Results 7-50
7-16 Volatile TOC Condensate LCS/LCSD Results 7-50
7-17 Acid Gas Sample Holding Time Summary 7-51
7-18 Acid Gas LCS Results 7-51
7-19 Acid Gas MS/MSD Results 7-51
7-20 Trace Metal Blank Results 7-52
7-21 Trace Metal LCS Results 7-53
7-22 Trace Metal MS/MSD Results 7-54
7-23 Energetic Holding Time Summary and Surrogate Standard Results 7-55
7-24 Energetic LCS Results 7-56
8-1 Sampling Time Intervals 8-11
8-2 Summary of Select Criteria Pollutant Emissions 8-11
8-3 DRE Summary 8-12
8-4 Semivolatile Organic Emissions Summary 8-13
8-5 Dioxin/Furan Emissions Summary 8-33
8-6 Volatile Organic Emissions Summary 8-37
8-7 TOC Emissions Summary 8-43
8-8 Semivolatile Unspeciated Organics Emissions Summary 8-43
8-9 Volatile Unspeciated Organics Emissions Summary 8-44
8-10 Acid Gases and Particulate Emissions Summary 8-47
8-11 Trace Metals Emissions Summary 8-48

LIST OF TABLES (Continued) PAGES

8-12 Energetic Emissions Summary 8-51
8-13 Proposed Feed Rates 8-52

LIST OF APPENDICES

A RCRA PDARS Reports
B Final ANCDF SDC Emissions Test Plan, Revision 4
C Sampling Report
C-1 Sample Logs
C-2 Raw Field Data
C-3 Reduced Field Data
D Instrument Calibration Records
D-1 Process Control Equipment
D-2 Facility CEMS
D-3 Sampling Equipment
E Feed Sheets
F Analytical Data Packages
F-1 SO_2 and NO_x CEMS
F-2 Semivolatile Organics
F-3 Dioxins and Furans
F-4 Volatile Organics
F-5 Semivolatile Unspeciated Organics
F-6 Volatile Unspeciated Organics
F-7 Volatile Condensates
F-8 Acid Gases and Particulates
F-9 Trace Metals
F-10 Energetics
G DAAMS DRE Package
H Emission Results for C4bR2 and Particulate Results from C4bR5

ACRONYMS AND ABBREVIATIONS

% .....percent
@.....at
---.....not applicable
± .....plus or minus
< .....less than
> .....greater than
≤ .....less than or equal to
≥ .....greater than or equal to
° .....degree
°C .....degree Celsius
°F.....degree Fahrenheit
3X.....3 times
5X.....5 times
6X.....6 times
50X.....50 times
100X.....100 times

AAC .....ADEM Administrative Code
AAHH.....alarm analyzer high-high
ADEM.....Alabama Department of Environmental Management
amu.....atomic mass unit
ANCDF.....Anniston Chemical Agent Disposal Facility
APCE .....air pollution control equipment
ASC.....allowable stack concentration

C1.....Condition 1
C2.....Condition 2
C3.....Condition 3
C4a .....Condition 4a
C4b.....Condition 4b
CAA .....Clean Air Act
CCC.....calibration check compound
CCV .....continuing calibration verification
CDD .....chlorinated dibenzo-p-dioxin
CDF.....chlorinated dibenzofuran
CEMS.....continuous emissions monitoring system
cf .....cubic feet
cfm .....cubic feet per minute
CFR.....Code of Federal Regulations
CO.....carbon monoxide
CO_2.....carbon dioxide
COC .....chain-of-custody
CON .....Control Room
CVAAS.....cold vapor atomic absorption spectroscopy

ACRONYMS AND ABBREVIATIONS (Continued)

DAAMS .....Depot Area Air Monitoring System
DAS.....Data Acquisition System
DCLS .....detonation chamber lifting system
DCRS .....detonation chamber rotating system
DI .....deionized
DL .....detection limit
DRE.....destruction and removal efficiency
dscf.....dry standard cubic feet
dscf/hr .....dry standard cubic feet per hour
dscfm.....dry standard cubic feet per minute
dscm .....dry standard cubic meter
dsL.....dry standard liter
EPA.....Environmental Protection Agency

FID .....flame ionizing detector
FIS.....flow indicting sensor
FPD .....flame photometric detector
FPI.....feed prohibitive interlock

g.....grams
GC.....gas chromatography
g/g-mole .....gram per gram-mole
gr/dscf .....grains per dry standard cubic feet
GRAV .....gravimetric
g/s.....grams per second

HCl.....hydrogen chloride
HEPA .....high efficiency particulate air
HNO_3.....nitric acid
H_2O .....water
H_2O_2 .....hydrogen peroxide
HPLC .....high performance liquid chromatography
HRA .....Health Risk Assessment
HRGC .....high resolution gas chromatograph
HRMS .....high resolution mass spectroscopy
hrs.....hours
H_2SO_4.....sulfuric acid

IAW.....in accordance with
IC.....ion chromatography
ICAL .....initial calibration
ICP .....inductively coupled plasma
ICS .....interference check sample
ID .....identification
ID .....induced draft

ACRONYMS AND ABBREVIATIONS (Continued)

in .....inches
inHg.....inch of mercury
inwc.....inch of water column

$KMnO_4$.....potassium permanganate

L .....liters
lbs.....pounds
lb/lb-mole.....pound per pound-mole
lbs/hr .....pounds per hour
LCS .....laboratory control sample
LCSD .....laboratory control sample duplicate
LDC.....lower detonation chamber
L/min.....liter per minute
LOP .....Laboratory Operating Procedure

M1.....US EPA Method 1
M2.....US EPA Method 2
M3B .....US EPA Method 3B
M4.....US EPA Method 4
M5.....US EPA Method 5
M6C .....US EPA Method 6C
M7E.....US EPA Method 7E
M10.....US EPA Method 10
M26A .....US EPA Method 26A
M29.....US EPA Method 29
MM5E.....US EPA Modified Method 5
M0010.....SW-846 Method 0010
M0023A .....SW-846 Method 0023A
M0030.....SW-846 Method 0030
M0040.....SW-846 Method 0040
M3510C .....SW-846 Method 3510C
M3535.....SW-846 Method 3535
M3540C .....SW-846 Method 3540C
M3542.....SW-846 Method 3542
M5041A .....SW-846 Method 5041A
M6020.....SW-846 Method 6020
M7470A .....SW-846 Method 7470A
M7471A .....SW-846 Method 7471A
M8260B .....SW-846 Method 8260B
M8270C .....SW-846 Method 8270C
M8290.....SW-846 Method 8290
M8330.....SW-846 Method 8330
MACT.....Maximum Achievable Control Technologies
MAX .....maximum
MDL.....method detection limit

ACRONYMS AND ABBREVIATIONS (Continued)

mg .....milligram
mg/dscm.....milligrams per dry standard cubic meter
mg/m^3.....milligrams per cubic meter
mg/scm.....milligrams per standard cubic meter
MIN.....minimum
mL.....milliliter
mm .....millimeter
mmHg .....millimeters mercury
MS.....matrix spike
MS.....mass spectrometer
MSD.....mass spectrometer detector
MSD.....matrix spike duplicate

N.....normal
NaOH .....sodium hydroxide
ND.....not detected
ng.....nanograms
ng/dscm.....nanograms per dry standard cubic meter
NO_x .....nitrogen oxides

O_2 .....oxygen
OGT .....Off-Gas Treatment System

PDARS.....process data acquisition and recording system
PDS .....pressure differential sensor
pg.....picograms
PIC .....pressure indicating controller
PIC .....product of incomplete combustion
PISA.....pressure indicating sensing alarm
PLC.....programmable logic controller
ppmv .....parts per million volume
psi.....pounds per square inch

QA.....quality assurance
QAPP .....Quality Assurance Project Plan
QC.....quality control
QL .....quality lab
QP .....quality plant

R1.....Run 1
R2.....Run 2
R3.....Run 3
R4.....Run 4
R5.....Run 5
RCRA.....Resources Conservation and Recovery Act
RF.....response factor

ACRONYMS AND ABBREVIATIONS (Continued)

RL .....reporting limit
ROHA .....rolling hourly average
RPD.....relative percent difference
RSD.....relative standard deviation
RT .....retention time

SAP .....Sampling and Analysis Plan
scm .....standard cubic meters
scm/hr.....standard cubic meters per hour
SDC.....Static Detonation Chamber
SFU .....Safeguard Filter Unit
SIC .....sulfur-impregnated carbon
sLpm .....standard liters per minute
SPCC.....system performance check compounds
SO_2 .....sulfur dioxide

TCO.....total chromatographable organic
TEF .....toxic equivalent factor
TEQ.....toxic equivalent quotient
TI.....temperature indication
TIA.....temperature indicating alarm
TIC .....temperature indicating controller
TIC .....tentatively identified compound
TICSA.....temperature indicating sensing alarm
TOC.....total organic compound
TRM.....temporary reference method

UDC .....upper discharge conveyor
ug.....micrograms
ug/dscm .....micrograms per dry standard cubic meter
ug/L .....micrograms per liter
US .....United States

VAC .....vacuum

WA.....Westinghouse Anniston
WMM.....waste military munition

ES.1 OVERVIEW

Anniston Chemical Agent Disposal Facility (ANCDF) conducted emissions testing for mustard-filled munitions with sulfur-impregnated carbon (SIC) in the Safeguard Filter Unit (SFU) (Condition 4b [C4b]) on the Static Detonation Chamber (SDC) System from August 9 to 12, 2011, as summarized in Table ES-1, with preliminary information collected on August 8, 2011. Emissions testing results for conventional weapons (Condition 1 [C1]), surrogates (Conditions 2 [C2] and 3 [C3]), and chemical agent at a reduced feed rate (Condition 4a [C4a]) were submitted to the Alabama Department of Environmental Management (ADEM) in previous reports.

The purpose of this final report is to convey to the ADEM data regarding the performance standards and processing parameters that are enumerated in the Resource Conservation and Recovery Act (RCRA) and Clean Air Act (CAA) Permits for the SDC System. The emissions tests were performed to demonstrate the following objectives as outlined in the ANCDF SDC Emissions Test Plan:

- Demonstrate the destruction and removal efficiency (DRE) of greater than or equal to (≥) 99.9999 percent (%) for mustard agent at a feed rate of up to 72 pounds per hour (lbs/hr) of mustard agent;
- Demonstrate a rolling hourly average (ROHA) allowable stack concentration (ASC) of less than (<) 0.006 milligrams per cubic meter (mg/m^3) and/or instantaneous ASC of < 0.03 mg/m^3 for mustard agent; and
- Demonstrate that emissions are less than the screening levels established in the Health Risk Assessment (HRA).

For C4b, a total of five (5) test runs were conducted; however, only Runs 1, 4, and 5 were used to compare emissions to permitted limits. At the conclusion of C4b Run 2 (C4bR2, etc.), it was discovered that quality plant (QP) Depot Area Air Monitoring System (DAAMS) tubes were not installed for sample collection thus rendering the run unacceptable for DRE and feed rate compliance purposes. With the exception of particulates, the C4bR2 sampling trains were analyzed for informational purposes. The C4bR2 particulate results were used for compliance purposes due to a sampling method deviation incurred during C4bR5 on the acid gas/particulate sampling train. Particulate results for C4bR5 have been included for informational purposes only. C4bR3 was invalidated due to carbon monoxide (CO) exceeding permitted limits.

All testing and system/analytical data collection planned for C4b were completed. ANCDF has reviewed the data to assess their usability and to determine appropriate operating conditions for the SDC System. All data have been determined to be useable for their intended purpose.

The operating condition of the SDC System was captured by the Process Data Acquisition and Recording System (PDARS). Data was collected in one (1)-minute averages during actual sampling.

ES.2 SAMPLING METHODS

On-site sampling activities included the equipment staging in the field, sampling operations, data logging, and sample recovery. Exhaust gas samples were collected using the following methods in accordance with (IAW) the approved ANCDF SDC Emissions Test Plan and are as follows:

- United States (US) Environmental Protection Agency (EPA) Methods 1 (M1) and 2 (M2) for traverse sampling locations and flow rates;
- US EPA Method 3B (M3B) for carbon dioxide (CO_2) and oxygen (O_2) levels;
- US EPA Method 4 (M4) for moisture;
- US EPA Method 6C (M6C) for sulfur dioxide (SO_2) emissions;
- US EPA Method 7E (M7E) for nitrogen oxides (NO_x) emissions;
- US EPA Method 10 (M10) for CO concentrations;
- SW-846 Method 0010 (M0010) for semivolatile, unspeciated, and gravimetric organic emissions [two (2) sampling trains];
- SW-846 Method 0023A (M0023A) for dioxin/furan emissions;
- SW-846 Method 0030 (M0030) for volatile organic emissions;
- SW-846 Method 0040 (M0040) for volatile unspeciated organic emissions;
- US EPA Method 26A (M26A) for the acid gas and particulate emissions;
- US EPA Method 29 (M29) for trace metal emissions, and
- US EPA Modified Method 5 (MM5E) for energetic emissions.

ES.3 DAILY RUN SUMMARIES

The following are daily accounts of the on-site test activities. These summaries are presented in sequential order for the entire emissions testing effort and include the preliminary measurements. Table ES-1 presents a summary of the sampling times.

Monday, August 8, 2011 - C4b Preliminary Measurements: Preliminary velocity traverses and cyclonic flow checks were conducted at the exhaust blower duct prior to the start of the emissions test for C4b. Moisture runs were also conducted to verify the moisture content of the exhaust gas. The cyclonic flow measurements within the duct at the sampling location yielded results within specified limits. All velocity and moisture measurements were reliable indicators of actual flow and moisture conditions and did not change appreciably from run to run. The M0010, M0010 for total organic compounds (M0010-TOC), M0023A, M26A, and M29 field blank sampling trains were set-up and recovered.

Tuesday, August 9, 2011 - C4bR1: Exhaust gas sampling commenced at 1110 hours (hrs) and was paused at 1310 hrs for port change. All leak checks were successfully completed. Sampling resumed in the second port at 1420 hrs and concluded at 1620 hrs with all leak checks successfully completed. All samples were recovered, labeled, and custody-sealed.

Wednesday, August 10, 2011 - C4bR2: Exhaust gas sampling commenced at 0940 hrs and was paused at 1140 hrs for port change. All leak checks were successfully completed. Sampling resumed in the second port at 1505 hrs and concluded at 1705 hrs with all leak checks successfully completed. At the conclusion of C4bR2, it was discovered that QP DAAMS tubes were not installed for sample collection thus rendering the run unacceptable for DRE and feed rate compliance purposes. All other samples were recovered, labeled, and custody-sealed.

Thursday, August 11, 2011 - C4bR3: Exhaust gas sampling commenced at 1130 hrs and was paused at 1330 hrs for port change. All leak checks were successfully completed. Sampling resumed in the second port at 1650 hrs and paused at 1746 hrs due to a Feed Prohibitive Interlock (FPI) (SDC-13: CO Concentration) being incurred preventing further feed. Once the FPI was cleared, sampling resumed at 2041 hrs and concluded at 2145 hrs with all leak checks successfully completed. All samples were recovered, labeled, and custody-sealed. The MM5E field blank sample train was also set-up and recovered.

Friday, August 12, 2011 - C4bR4: Exhaust gas sampling commenced at 1735 hrs and was paused at 1935 hrs for port change. All leak checks were successfully completed. Sampling resumed in the second port at 2055 hrs and concluded at 2255 hrs with all leak checks successfully completed. All samples were recovered, labeled, and custody-sealed.

Saturday, August 13, 2011 - C4bR5: Exhaust gas sampling commenced at 1155 hrs and was paused at 1355 hrs for port change. All leak checks were successfully completed. Sampling resumed in the second port at 1600 hrs and concluded at 1800 hrs with all leak checks successfully completed. All samples were recovered, labeled, and custody-sealed.

ES.4 PERFORMANCE STANDARDS

The measured performance standards are discussed in the following sections.

ES.4.1 Select Criteria Pollutant Emissions

CO concentrations were measured by the facility and Temporary Reference Method (TRM) Continuous Emissions Monitoring System (CEMS) located on the exhaust blower duct. Control of products of incomplete combustion was demonstrated by monitoring the CO concentration (ROHA) to below the RCRA/CAA Permit limit of 100 parts per million by volume (ppmv), dry basis, corrected to 7% O_2. CO concentrations were also measured by a TRM CEMS located on the exhaust blower duct. As summarized in Table ES-2, the average ROHA CO concentrations, measured by facility and TRM CEMS, were in compliance with the RCRA/CAA Permit limit of 100 ppmv, dry basis, corrected to 7% O_2. The average instantaneous CO emission rates were also in compliance with the CAA Permit limit of 0.02 lbs/hr.

SO_2 and NO_x emissions were measured by the TRM CEMS located on the exhaust blower duct. As summarized in Table 7, the average SO_2 and NO_x emission rates were in compliance with the CAA Permit limit of 7.20 and 0.80 lbs/hr, respectively.

Composite exhaust gas samples were collected to determine the concentration of O_2 and CO_2 to be used in the calculation of the exhaust gas molecular weight. This calculated molecular weight

was used by individual sampling trains to calculate specific parameters associated with gas flow and sampling train isokinetic percentages. In addition, the O_2 data was used to correct emission rates.

ES.4.2 DRE

The DRE results are summarized in Table ES-3. The agent emissions were measured by a DAAMS that was located at the exhaust blower duct near the location where exhaust gas sampling was occurring. The four (4)-hour DAAMS tube set was analyzed for mustard agent concentration by the on-site laboratory. The DRE was calculated per the method specified in ADEM Administrative Code (AAC) 335-14-5-.15(4)(a)1 as follows:

$$DRE = \left(\frac{W_{in} - W_{out}}{W_{out}} \right) x\ 100$$

Where:

Win = Feed rate (lbs/hr)
Wout = Emission rate (lbs/hr)

The feed rate was determined based on the amount of agent per hour demonstrated (see Table ES-3). Further, the feed rate was purity-adjusted which provides a worst-case or lowest DRE. The mustard agent DRE for all runs was in compliance with the RCRA/CAA Permit limit of 99.9999%.

ES.4.3 Semivolatile Organic Emissions

Table ES-4 summarizes the semivolatile organic emissions results by test run and condition average. No blank corrections have been made to the data. In instances where non-detects (NDs) were incurred, the reporting limit (RL) was used to calculate an emissions rate. No permitted emission limits are associated with semivolatile organic emissions.

ES.4.4 Dioxin/Furan Emissions

Table ES-5 summarizes the dioxin/furan emissions results by test run and condition average. No blank corrections have been made to the data. In instances where NDs were incurred, the RL was used to calculate an emissions rate. The US EPA toxicity equivalency factors (TEFs) were applied to the detected quantities of each isomer, as well as the total congeners (EPA/100/R-10/005). For the isomer-specific results, the applicable TEF was used to determine the toxicity equivalency quotient (TEQ). The dioxin/furan emission rates for all runs were in compliance with the CAA Permit limit of 0.20 nanograms-TEQ per dry standard cubic meter (ng-TEQ/dscm), corrected to 7% O_2 using Orsat data.

ES.4.5 Volatile Organic Emissions

Table ES-6 summarizes the volatile organic emissions results by test run and condition average. No blank corrections have been made to the data. In instances where NDs were incurred, the RL was used to calculate an emissions rate. No permitted emission limits are associated with volatile organic emissions.

ES.4.6 TOC Emissions

Table ES-7 summarizes the TOC emissions results by test run and condition average. Sampling for volatile/semivolatile unspeciated and gravimetric organics was conducted using the M0010 and M0040 sampling trains. In instances where NDs were incurred, the RL was used to calculate an emissions rate. No permitted emission limits are associated with TOC emissions.

ES.4.7 Acid Gases and Particulate Emissions

Table ES-8 summarizes the acid gases and particulate emissions results by test run and condition average. No blank corrections have been made to the data. In instances where NDs were incurred, the RL was used to calculate an emissions rate. The chlorine equivalent concentrations for all runs were in compliance with the CAA Permit limit of 21 ppmv, corrected to 7% O_2 using Orsat data. The particulate emission rates for all runs were in compliance with the RCRA/CAA Permit limit of 0.013 grains per dry standard cubic feet (gr/dscf), corrected to 7% O_2 using Orsat data.

ES.4.8 Trace Metal Emissions

Table ES-9 summarizes the trace metal emissions results by test run and condition average. No blank corrections have been made to the data. In instances where NDs were incurred, the RL was used to calculate an emissions rate. The low-volatile (arsenic, beryllium, and chromium combined), semivolatile (cadmium and lead combined), and high-volatile (mercury) metal emission rates for all runs were in compliance with the CAA Permit limits of 23, 10, and 8.1 micrograms per dry standard cubic meter (ug/dscm), corrected to 7% O_2 using Orsat data, respectively.

ES.4.9 Energetic Emissions

Table ES-10 summarizes the energetic emissions results by test run and condition average. No blank corrections have been made to the data. In instances where NDs were incurred, the RL was used to calculate an emissions rate. No permitted emission limits are associated with energetic emissions.

ES.5 FPI LIMITS

Based on the C4b emission results and PDARS data, the FPI parameters were within those listed in Table 2 of the ANCDF SDC Emissions Test Plan and demonstrate that the current permitted setpoints are protective of human health and the environment.

Emissions tests have been performed for five (5) test conditions at the SDC. C1 was for processing conventional weapons without SIC in the SFU. C2 and C3 were for processing surrogates, including metal oxides, with (C3) and without (C2) SIC in the SFU. C4a and C4b were for processing chemical agent, at low (C4a) and high (C4b) feeds, with SIC in the SFU. C3, C4a, and C4b were used for FPI determination because of the requirement to use SIC in the SFU while processing conventional or chemical agent munitions.

ES.5.1 Maximum Detonation Chamber Pressure (SDC-01)

The instantaneous FPI setpoint for the maximum detonation chamber pressure was 362 psi. The following detonation chamber pressures were measured during C3, C4a, and C4b emission testing:

	Condition 3			
Statistic (psi)	**C3R1**	**C3R2**	**C3R3**	**Average**
Minimum	2.72	2.88	2.88	2.83
Maximum	8.59	8.57	8.24	8.46
Average	5.87	6.12	6.10	6.03
	Condition 4a			
Statistic (psi)	**C4aR1**	**C4aR2**	**C4aR4**	**Average**
Minimum	4.54	3.25	2.80	3.53
Maximum	10.81	16.12	9.54	12.15
Average	6.57	5.64	4.10	5.44
	Condition 4b			
Statistic (psi)	**C4bR1**	**C4bR4**	**C4bR5**	**Average**
Minimum	7.61	3.50	0.063	3.72
Maximum	**18.32**	13.01	9.80	13.71
Average	10.42	6.29	2.22	6.31

ANCDF proposes 18 psi as the maximum instantaneous detonation chamber pressure FPI (SDC-01).

ES.5.2 Minimum Detonation Chamber Temperature (SDC-02)

The instantaneous FPI setpoint for the minimum detonation chamber temperature was 1,000°F. The following detonation chamber temperatures were measured during C3, C4a, and C4b emission testing:

	Condition 3			
Statistic (°F)	**C3R1**	**C3R2**	**C3R3**	**Average**
Minimum	1,246.58	1,399.40	1,398.29	1,348.09
Maximum	1,418.57	1,401.45	1,402.85	1,407.62
Average	1,335.85	1,400.16	1,400.01	1,378.67
	Condition 4a			
Statistic (°F)	**C4aR1**	**C4aR2**	**C4aR4**	**Average**
Minimum	1,449.00	1,449.29	1,449.58	1,449.29
Maximum	1,450.67	1,450.67	1,450.59	1,450.64
Average	1,450.05	1,450.01	1,450.01	1,450.02
	Condition 4b			
Statistic (°F)	**C4bR1**	**C4bR4**	**C4bR5**	**Average**
Minimum	1,449.51	1,449.58	1,441.62	1,446.90
Maximum	1,450.67	1,450.59	1,457.40	1,452.89
Average	1,450.04	1,450.00	1,449.93	1,449.99

ANCDF proposes to retain the current limit of 1,000°F for this FPI as it is an established temperature for treatment of chemical agents. Chemical agents held at a temperature of 1,000°F for a period of 15-minutes are destroyed to the accepted 5X level. Given that no chemical munition will be within the detonation chamber for < 15-minutes, the low temperature limit of 1,000°F provides suitable protection.

ES.5.3 Minimum Thermal Oxidizer Temperature (SDC-03)

The instantaneous FPI setpoint for the minimum thermal oxidizer temperature was 1,400°F. The following thermal oxidizer temperatures were measured during C3, C4a, and C4b emission testing:

	Condition 3			
Statistic (°F)	**C3R1**	**C3R2**	**C3R3**	**Average**
Minimum	1,741.34	1,750.03	1,733.59	**1,741.65**
Maximum	1,940.16	2,005.05	1,998.26	1,981.16
Average	1,802.23	1,805.81	1,809.77	1,805.94
	Condition 4a			
Statistic (°F)	**C4aR1**	**C4aR2**	**C4aR4**	**Average**
Minimum	1,759.77	1,771.66	1,772.50	1,767.97
Maximum	1,916.85	1,983.64	1,941.79	1,947.42
Average	1,806.48	1,805.50	1,809.25	1,807.08
	Condition 4b			
Statistic (°F)	**C4bR1**	**C4bR4**	**C4bR5**	**Average**
Minimum	1,855.83	1,723.48	1,872.88	1,817.39
Maximum	2,104.54	2,061.86	2,088.14	2,084.85
Average	1,914.09	1,914.48	1,930.36	1,919.64

ANCDF proposes 1,741°F as the instantaneous minimum thermal oxidizer temperature (SDC-03).

ES.5.4 Maximum Thermal Oxidizer Pressure (SDC-04)

The instantaneous FPI setpoint for the maximum thermal oxidizer pressure was 0.0 psi. The following thermal oxidizer pressures were measured during C3, C4a, and C4b emission testing:

	Condition 3			
Statistic (psi)	**C3R1**	**C3R2**	**C3R3**	**Average**
Minimum	-0.136	-0.138	-0.123	-0.132
Maximum	-0.025	-0.041	-0.040	-0.035
Average	-0.069	-0.069	-0.071	-0.069
	Condition 4a			
Statistic (psi)	**C4aR1**	**C4aR2**	**C4aR4**	**Average**
Minimum	-0.120	-0.188	-0.098	-0.135
Maximum	-0.033	0.055	0.0080	0.010
Average	-0.071	-0.056	-0.065	-0.064
	Condition 4b			
Statistic (psi)	**C4bR1**	**C4bR4**	**C4bR5**	**Average**
Minimum	-0.105	-0.093	-0.095	-0.098
Maximum	-0.035	-0.043	-0.048	-0.042
Average	-0.071	-0.071	-0.071	-0.071

ANCDF proposes to retain the instantaneous maximum thermal oxidizer pressure (SDC-04) of -0.01 psi as the SDC System should be maintained under negative pressure during a feed event to minimize impacts to human health and the environment.

ES.5.5 Maximum Spray Dryer Temperature (SDC-05)

The instantaneous FPI setpoint for the maximum spray dryer temperature was 500°F. The following spray dryer temperatures were measured during C3, C4a, and C4b emission testing:

	Condition 3			
Statistic (°F)	**C3R1**	**C3R2**	**C3R3**	**Average**
Minimum	322.42	322.96	321.56	322.31
Maximum	338.65	339.34	338.83	338.94
Average	329.91	329.91	329.77	329.86
	Condition 4a			
Statistic (°F)	**C4aR1**	**C4aR2**	**C4aR4**	**Average**
Minimum	314.28	308.38	319.03	313.90
Maximum	339.09	345.54	344.30	342.98
Average	330.03	329.98	329.54	329.85
	Condition 4b			
Statistic (°F)	**C4bR1**	**C4bR4**	**C4bR5**	**Average**
Minimum	375.24	382.03	382.03	379.77
Maximum	403.98	398.13	398.61	**400.24**
Average	390.25	390.14	390.15	390.18

ANCDF proposes 400°F as the instantaneous maximum spray dryer temperature (SDC-05).

ES.5.6 Maximum Bag House Pressure (SDC-06)

The instantaneous FPI setpoint for the maximum bag house pressure was 0.3 psi. The following bag house pressures were measured during C3, C4a, and C4b emission testing:

	Condition 3			
Statistic (psi)	**C3R1**	**C3R2**	**C3R3**	**Average**
Minimum	0.045	0.053	0.060	0.053
Maximum	0.183	0.182	0.182	**0.182**
Average	0.129	0.132	0.131	0.131
	Condition 4a			
Statistic (psi)	**C4aR1**	**C4aR2**	**C4aR4**	**Average**
Minimum	0.030	0.020	0.030	0.027
Maximum	0.183	0.180	0.170	0.178
Average	0.105	0.116	0.100	0.107
	Condition 4b			
Statistic (psi)	**C4bR1**	**C4bR4**	**C4bR5**	**Average**
Minimum	0.060	0.070	0.060	0.063
Maximum	0.080	0.095	0.095	0.090
Average	0.069	0.086	0.084	0.080

ANCDF proposes 0.18 psi as the instantaneous maximum bag house pressure (SDC-06).

ES.5.7 Minimum Acid Scrubber Flow Rate (SDC-07)

The instantaneous FPI setpoint for the minimum acid scrubber flow rate was 1.0 cfm. The following acid scrubber flow rates were measured during C3, C4a, and C4b emission testing:

	Condition 3			
Statistic (cfm)	**C3R1**	**C3R2**	**C3R3**	**Average**
Minimum	3.74	3.77	3.76	3.76
Maximum	4.05	4.08	4.09	4.07
Average	3.81	3.81	3.80	3.81
	Condition 4a			
Statistic (cfm)	**C4aR1**	**C4aR2**	**C4aR4**	**Average**
Minimum	3.17	3.17	3.16	**3.17**
Maximum	3.55	3.56	3.54	3.55
Average	3.25	3.26	3.24	3.25
	Condition 4b			
Statistic (cfm)	**C4bR1**	**C4bR4**	**C4bR5**	**Average**
Minimum	3.21	3.28	3.28	3.26
Maximum	3.58	3.67	3.33	3.53
Average	3.26	3.33	3.30	3.30

ANCDF proposes 3.2 cfm as the instantaneous minimum acid scrubber flow rate (SDC-07).

ES.5.8 Minimum Quench Tower Flow Rate (SDC-08)

The instantaneous FPI setpoint for the minimum quench tower flow rate was 0.5 cfm. The following quench tower flow rates were measured during C3, C4a, and C4b emission testing:

	Condition 3			
Statistic (cfm)	**C3R1**	**C3R2**	**C3R3**	**Average**
Minimum	2.43	2.45	2.45	**2.44**
Maximum	2.59	2.59	2.59	2.59
Average	2.56	2.58	2.58	2.57

	Condition 4a			
Statistic (cfm)	**C4aR1**	**C4aR2**	**C4aR4**	**Average**
Minimum	2.69	2.69	2.69	2.69
Maximum	2.89	2.88	2.88	2.89
Average	2.84	2.84	2.84	2.84
	Condition 4b			
Statistic (cfm)	**C4bR1**	**C4bR4**	**C4bR5**	**Average**
Minimum	2.70	2.64	2.79	2.71
Maximum	2.89	2.82	2.82	2.84
Average	2.86	2.80	2.80	2.82

ANCDF proposes 2.4 cfm as the instantaneous minimum quench tower flow rate (SDC-08).

ES.5.9 Maximum Quench Tower Temperature (SDC-09)

The instantaneous FPI setpoint for the maximum quench tower temperature was 190°F. The following quench tower temperatures were measured during C3, C4a, and C4b emission testing:

	Condition 3							
	C3R1		C3R2		C3R3		Average	
Statistic (°F)	TI-34003	TI-34004	TI-34003	TI-34004	TI-34003	TI-34004	TI-34003	TI-34004
Minimum	141.18	141.55	145.53	145.61	146.78	146.94	144.50	144.70
Maximum	148.64	149.12	150.73	151.19	151.34	151.78	150.24	150.69
Average	145.97	146.25	147.76	148.03	148.69	148.95	147.47	147.74
	Condition 4a							
	C4aR1		C4aR2		C4aR4		Average	
Statistic (°F)	TI-34003	TI-34004	TI-34003	TI-34004	TI-34003	TI-34004	TI-34003	TI-34004
Minimum	158.57	158.70	154.21	154.17	159.01	159.22	157.26	157.36
Maximum	163.92	164.43	162.74	163.16	165.04	165.42	163.90	164.34
Average	160.41	160.67	158.76	158.98	160.95	161.16	160.04	160.27
	Condition 4b							
	C4bR1		C4bR4		C4bR5		Average	
Statistic (°F)	TI-34003	TI-34004	TI-34003	TI-34004	TI-34003	TI-34004	TI-34003	TI-34004
Minimum	163.43	163.61	164.67	164.77	162.38	162.61	163.49	163.66
Maximum	170.29	170.82	169.93	170.29	169.28	169.58	**169.83**	**170.23**
Average	166.55	166.85	167.19	167.43	165.10	165.31	166.28	166.53

ANCDF proposes 170°F as the instantaneous maximum quench tower temperature (SDC-09).

ES.5.10 Maximum Neutral Scrubber Temperature (SDC-10)

The instantaneous FPI setpoint for the maximum neutral scrubber temperature was 200°F. The following neutral scrubber temperatures were measured during C3, C4a, and C4b emission testing:

	Condition 3			
Statistic (°F)	C3R1	C3R2	C3R3	Average
Minimum	160.02	164.69	164.62	163.11
Maximum	171.98	172.55	173.56	172.70
Average	168.27	170.65	171.12	170.01
	Condition 4a			
Statistic (°F)	C4aR1	C4aR2	C4aR4	Average
Minimum	174.94	174.65	175.00	174.86
Maximum	180.85	181.35	182.42	181.54
Average	178.35	178.19	178.76	178.43

	Condition 4b			
Statistic (°F)	C4bR1	C4bR4	C4bR5	Average
Minimum	163.82	167.71	164.63	165.39
Maximum	182.25	182.87	182.89	182.67
Average	178.28	179.58	177.02	178.29

ANCDF proposes retaining the manufacturer's standard of 200°F as the instantaneous maximum neutral scrubber temperature (SDC-10).

ES.5.11 Maximum Chemical Agent Emissions (SDC-11/12)

The instantaneous and ROHA FPI setpoint for the maximum chemical agent emission rate was 0.03 and 0.006 mg/m^3, respectively. No ACAMS alarm was incurred during C4b testing. ANCDF proposes retaining the ACAMS setpoints as it is protective of human health and the environment.

ES.5.12 Maximum CO Concentration (SDC-13)

The ROHA FPI setpoint for the maximum CO concentration was 100 ppmv, dry basis corrected to 7% O_2. The following CO concentrations were measured during C3, C4a, and C4b emission testing:

	Condition 3			
Statistic (ppmv)	**C3R1**	**C3R2**	**C3R3**	**Average**
Minimum	0.42	0.48	0.16	0.35
Maximum	0.49	1.17	1.14	0.93
Average	0.46	0.61	0.56	0.54
	Condition 4a			
Statistic (ppmv)	**C4aR1**	**C4aR2**	**C4aR4**	**Average**
Minimum	0.14	0.14	0.14	0.14
Maximum	0.64	7.42	9.01	5.69
Average	0.19	0.99	0.52	0.57
	Condition 4b			
Statistic (ppmv)	**C4bR1**	**C4bR4**	**C4bR5**	**Average**
Minimum	0.44	0.23	0.16	0.28
Maximum	0.98	1.55	0.58	1.04
Average	0.64	0.51	0.30	0.48

ANCDF proposes retaining 100 ppmv, dry basis corrected to 7% O_2, as the maximum ROHA CO concentration (SDC-13) as this is a regulatory limit.

ES.6 PROPOSED FEED RATES

The chemical agent feed rates demonstrated during C4b were 62.23, 56.62, and 51.11 lbs/hr for C4bR1, C4bR4, and C4bR5, respectively, with an average of 56.65 lbs/hr (or 56.6 lbs/hr) as summarized in Table ES-3. Upon approval of this final report, ANCDF proposes a 100% feed rate of 56.6 lbs/hr.

With the exception of nickel and zinc, the maximum metal feed rates were demonstrated during C3 and approved by ADEM in a previous submittal. The maximum feed rates for nickel and zinc were demonstrated during C4b. Upon approval of this final report, ANCDF proposes a 100% feed rate for nickel and zinc of 0.025 and 0.069 lbs/hr, respectively.

ES.7 DATA FOR USE IN THE HRA

The emissions rates presented in this report are proposed for modeling in the ANCDF HRA, which will be submitted under separate cover. For more discussion on health risk, the current ANCDF Risk Assessment Protocol should be consulted.

ES.8 FINAL CONCLUSIONS

The SDC achieved all compliance objectives specified in the ANCDF SDC Emissions Test Plan and RCRA/CAA Permits while processing mustard-filled munitions with SIC in the SFU.

Table ES-1: Sampling Time Intervals

Run	Date	First Port (hours)		Second Port (hours)	
		Start	Stop	Start	Stop
C4bR1	08/09/11	1110	1310	1420	1620
C4bR2[1]	08/10/11	0940	1140	1505	1705
C4bR3[2]	08/11/11	1130	1330	1650[2]	2145
C4bR4	08/12/11	1735	1935	2055	2255
C4bR5	08/13/11	1155	1355	1600	1800

Footnotes:
(1) Samples associated C4bR2 were extracted and analyzed for informational purposes only; with the exception of particulates, which were used for compliance purposes.
(2) C4bR3 was paused from 1746 to 2041 hrs after incurring a FPI (SDC-13: CO Concentration); thus invalidating the run.

Table ES-2: Summary of Select Criteria Pollutant Emissions

Parameter	Units	C4bR1	C4bR4	C4bR5	Average	RCRA/CAA Permit Limit
Carbon Monoxide (facility CEMS)[1]	ppmv	0.64	0.51	0.30	0.48	100 ROHA
	lbs/hr	0.0033	0.0032	0.0011	0.0026	0.02
Carbon Monoxide (TRM CEMS)	ppmv	1.41	1.82	1.56	1.60	---
	lbs/hr	0.0041	0.0051	0.0040	0.0044	---
Sulfur Dioxide (TRM CEMS)	lbs/hr	0.00	0.00054	0.00049	0.00034	7.20
Nitrogen Oxides (TRM CEMS)	lbs/hr	0.27	0.22	0.19	0.23	0.80

Footnote:
(1) Values summarized in table are averages. See Table 4-1 for minimum and maximum values.

Table ES-3: Summary of DRE

Parameter	Units	C4bR1	C4bR4	C4bR5	Average	RCRA/CAA Permit Limit
DAAMS Tube	---	AT001119	AT001703	AT004276	---	---
Sample Collection Time	minutes	240	240	240	240	---
DAAMS Flow Rate[1]	sLpm	0.19	0.19	0.20	0.19	---
Total Volume[2]	scm	4.56E-02	4.56E-02	4.80E-02	4.64E-02	---
Dilution Air[3]	%	92.3	92.2	92.0	92.17	---
Percent Sampled	%	7.7	7.8	8.0	7.83	---
Total Sample Volume	scm	3.51E-03	3.56E-03	3.84E-03	3.64E-03	---
Sample Analysis Result	ng	< 3.97E-01 [ND]	< 3.97E-01 [ND]	< 3.97E-01 [ND]	< 3.97E-01 [ND]	---
Flow Rate[4]	scm/hr	1,780.90	1,722.41	1,533.45	1,678.92	---
Agent Concentration	mg/scm	< 1.13E-04 [ND]	< 1.12E-04 [ND]	< 1.03E-04 [ND]	< 1.09E-04 [ND]	---
Emission Rate	lbs/hr	< 4.44E-07 [ND]	< 4.24E-07 [ND]	< 3.50E-07 [ND]	< 4.06E-07 [ND]	---
Average Feed Rate	lbs/hr	62.23	56.62	51.11	56.65	---
Agent Purity[5]	%	83.9	83.9	83.9	83.9	---
Purity-Adjusted Feed Rate	lbs/hr	52.21	47.50	42.88	47.53	---
DRE	%	> 99.9999991 [ND]	> 99.9999991 [ND]	> 99.9999991 [ND]	> 99.9999991 [ND]	99.9999

Footnotes:
(1) Flow rate is set prior to collection of the 4-hour DAAMS tube set and verified after the tubes have been collected. If the ending flow rate is less than the starting flow rate, then the ending (i.e., lower) flow rate is used to calculate the total exhaust gas flow rate.
(2) Total gas sample volume represents the exhaust gas sample volume and diluent volume.
(3) Percent dilution is set prior to collection of the 4-hour tube and verified after the tube has been collected. If the ending percent dilution is greater than the starting percent dilution, the ending (i.e., more dilute) dilution is used to calculate exhaust gas sampled.
(4) The exhaust gas flow rate was calculated based on the average of all isokinetic sample train for the respective run.
(5) Based on historical data, the average mustard purity of 83.9% has been used (see ANCDF SDC Emissions Test Plan).

Table ES-4: Summary of Semivolatile Organic Emissions

Parameter	Units	C4bR1		C4bR4		C4bR5		Average	
Acenaphthene	g/s	< 2.39E-06	ND	< 2.43E-06	ND	< 2.49E-06	ND	< 2.44E-06	ND
Acenaphthylene	g/s	< 2.39E-06	ND	< 2.43E-06	ND	< 2.49E-06	ND	< 2.44E-06	ND
Acetophenone	g/s	< 2.39E-06	ND	< 2.43E-06	ND	< 2.49E-06	ND	< 2.44E-06	ND
2-Acetylaminofluorene	g/s	< 2.39E-06	ND	< 2.43E-05	ND	< 2.49E-05	ND	< 2.44E-05	ND
4-Aminobiphenyl	g/s	< 1.20E-05	ND	< 1.21E-05	ND	< 1.25E-05	ND	< 1.22E-05	ND
Aniline	g/s	< 2.39E-06	ND	< 2.43E-06	ND	< 2.49E-06	ND	< 2.44E-06	ND
Anthracene	g/s	< 2.39E-06	ND	< 2.43E-06	ND	< 2.49E-06	ND	< 2.44E-06	ND
Aramite	g/s	< 4.79E-06	ND	< 4.86E-06	ND	< 4.98E-06	ND	< 4.88E-06	ND
Benzidine	g/s	< 2.39E-06	ND	< 2.43E-06	ND	< 2.49E-06	ND	< 2.44E-06	ND
Benzoic acid	g/s	< 1.71E-05		< 1.73E-05		< 1.85E-05		< 1.77E-05	
Benz (a) anthracene	g/s	< 2.39E-06	ND	< 2.43E-06	ND	< 2.49E-06	ND	< 2.44E-06	ND
Benzo (b) fluoranthrene	g/s	< 2.39E-06	ND	< 2.43E-06	ND	< 2.49E-06	ND	< 2.44E-06	ND
Benzo (j) fluoranthrene	g/s	< 2.39E-06	ND	< 2.43E-06	ND	< 2.49E-06	ND	< 2.44E-06	ND
Benzo (k) fluoranthrene	g/s	< 2.39E-06	ND	< 2.43E-06	ND	< 2.49E-06	ND	< 2.44E-06	ND
Benzo (g,h,i) perylene	g/s	< 2.39E-06	ND	< 2.43E-06	ND	< 2.49E-06	ND	< 2.44E-06	ND
Benzo (a) pyrene	g/s	< 2.39E-06	ND	< 2.43E-06	ND	< 2.49E-06	ND	< 2.44E-06	ND
Benzo (e) pyrene	g/s	< 2.39E-06	ND	< 2.43E-06	ND	< 2.49E-06	ND	< 2.44E-06	ND
Benzyl alcohol	g/s	< 1.75E-06		< 1.81E-06		< 1.85E-06		< 1.80E-06	
Benzaldehyde	g/s	< 2.39E-06	ND	< 2.05E-06		< 2.49E-06	ND	< 2.31E-06	
Biphenyl	g/s	< 2.39E-06	ND	< 2.43E-06	ND	< 2.49E-06	ND	< 2.44E-06	ND
bis(2-Chloroethoxy)-methane	g/s	< 2.39E-06	ND	< 2.43E-06	ND	< 2.49E-06	ND	< 2.44E-06	ND
bis(2-Chloroethyl) ether	g/s	< 2.39E-06	ND	< 2.43E-06	ND	< 2.49E-06	ND	< 2.44E-06	ND
bis(2-Chloroisopropyl) ether	g/s	< 2.39E-06	ND	< 2.43E-06	ND	< 2.49E-06	ND	< 2.44E-06	ND
bis(2-Ethylhexyl)-phthalate	g/s	2.91E-06		2.49E-06		< 3.11E-06		< 2.84E-06	
4-Bromophenyl phenyl ether	g/s	< 2.39E-06	ND	< 2.43E-06	ND	< 2.49E-06	ND	< 2.44E-06	ND
Butyl benzyl phthalate	g/s	< 2.39E-06	ND	< 2.43E-06	ND	< 2.49E-06	ND	< 2.44E-06	ND
2-sec-Butyl-4,6-dinitro-phenol	g/s	< 4.79E-06	ND	< 4.86E-06	ND	< 4.98E-06	ND	< 4.88E-06	ND
4-Chloroaniline	g/s	< 2.39E-06	ND	< 2.43E-06	ND	< 2.49E-06	ND	< 2.44E-06	ND
Chlorobenzilate	g/s	< 2.39E-06	ND	< 2.43E-06	ND	< 2.49E-06	ND	< 2.44E-06	ND
4-Chloro-3-methylphenol	g/s	< 1.20E-05	ND	< 1.21E-05	ND	< 1.25E-05	ND	< 1.22E-05	ND
1-Chloronaphthalene	g/s	< 2.39E-06	ND	< 2.43E-06	ND	< 2.49E-06	ND	< 2.44E-06	ND
2-Chloronaphthalene	g/s	< 2.39E-06	ND	< 2.43E-06	ND	< 2.49E-06	ND	< 2.44E-06	ND

Table ES-4: Summary of Semivolatile Organic Emissions (Continued)

Parameter	Units	C4bR1		C4bR4		C4bR5		Average	
2-Chlorophenol	g/s	< 2.39E-06	ND	< 2.43E-06	ND	< 2.49E-06	ND	< 2.44E-06	ND
4-Chlorophenyl phenyl ether	g/s	< 2.39E-06	ND	< 2.43E-06	ND	< 2.49E-06	ND	< 2.44E-06	ND
Chrysene	g/s	< 2.39E-06	ND	< 2.43E-06	ND	< 2.49E-06	ND	< 2.44E-06	ND
Diallate	g/s	< 4.79E-06	ND	< 4.86E-06	ND	< 4.98E-06	ND	< 4.88E-06	ND
Dibenz(a,j)acridine	g/s	< 4.79E-06	ND	< 4.86E-06	ND	< 4.98E-06	ND	< 4.88E-06	ND
Dibenz(a,h)anthracene	g/s	< 2.39E-06	ND	< 2.43E-06	ND	< 2.49E-06	ND	< 2.44E-06	ND
Dibenzofuran	g/s	< 2.39E-06	ND	< 2.43E-06	ND	< 2.49E-06	ND	< 2.44E-06	ND
Di-n-butyl phthalate	g/s	< 2.64E-06		< 2.31E-06		< 2.24E-06		< 2.40E-06	
1,2-Dichlorobenzene	g/s	< 2.39E-06	ND	< 2.43E-06	ND	< 2.49E-06	ND	< 2.44E-06	ND
1,3-Dichlorobenzene	g/s	< 2.39E-06	ND	< 2.43E-06	ND	< 2.49E-06	ND	< 2.44E-06	ND
1,4-Dichlorobenzene	g/s	< 2.39E-06	ND	< 2.43E-06	ND	< 2.49E-06	ND	< 2.44E-06	ND
3,3'-Dichlorobenzidine	g/s	< 4.79E-06	ND	< 4.86E-06	ND	< 4.98E-06	ND	< 4.88E-06	ND
2,4-Dichlorophenol	g/s	< 2.39E-06	ND	< 2.43E-06	ND	< 2.49E-06	ND	< 2.44E-06	ND
2,6-Dichlorophenol	g/s	< 2.39E-06	ND	< 2.43E-06	ND	< 2.49E-06	ND	< 2.44E-06	ND
Diethyl phthalate	g/s	< 2.39E-06	ND	< 2.43E-06	ND	< 2.49E-06	ND	< 2.44E-06	ND
p-Dimethylaminoazobenzene	g/s	< 4.79E-06	ND	< 4.86E-06	ND	< 4.98E-06	ND	< 4.88E-06	ND
7,12-Dimethylbenz(a)-anthracene	g/s	< 4.79E-06	ND	< 4.86E-06	ND	< 4.98E-06	ND	< 4.88E-06	ND
3,3'-Dimethylbenzidine	g/s	< 1.20E-05	ND	< 1.21E-05	ND	< 1.25E-05	ND	< 1.22E-05	ND
a,a-Dimethylphenethyl-amine	g/s	< 1.20E-05	ND	< 1.21E-05	ND	< 1.25E-05	ND	< 1.22E-05	ND
2,4-Dimethylphenol	g/s	< 2.39E-06	ND	< 2.43E-06	ND	< 2.49E-06	ND	< 2.44E-06	ND
Dimethyl phthalate	g/s	< 2.39E-06	ND	< 2.43E-06	ND	< 2.49E-06	ND	< 2.44E-06	ND
1,3-Dinitrobenzene	g/s	< 2.39E-06	ND	< 2.43E-06	ND	< 2.49E-06	ND	< 2.44E-06	ND
4,6-Dinitro-2-methylphenol	g/s	< 1.20E-05	ND	< 1.21E-05	ND	< 1.25E-05	ND	< 1.22E-05	ND
2,4-Dinitrophenol	g/s	< 1.20E-05	ND	< 1.21E-05	ND	< 1.25E-05	ND	< 1.22E-05	ND
2,4-Dinitrotoluene	g/s	< 2.39E-06	ND	< 2.43E-06	ND	< 2.49E-06	ND	< 2.44E-06	ND
2,6-Dinitrotoluene	g/s	< 2.39E-06	ND	< 2.43E-06	ND	< 2.49E-06	ND	< 2.44E-06	ND
Diphenylamine	g/s	< 2.39E-06	ND	< 2.43E-06	ND	< 2.49E-06	ND	< 2.44E-06	ND
1,2-Diphenylhydrazine	g/s	< 2.39E-06	ND	< 2.43E-06	ND	< 2.49E-06	ND	< 2.44E-06	ND
Di-n-octyl phthalate	g/s	< 2.39E-06	ND	< 2.43E-06	ND	< 2.49E-06	ND	< 2.44E-06	ND
Ethyl methanesulfonate	g/s	< 2.39E-06	ND	< 2.43E-06	ND	< 2.49E-06	ND	< 2.44E-06	ND
Ethyl parathion	g/s	< 1.20E-05	ND	< 1.21E-05	ND	< 1.25E-05	ND	< 1.22E-05	ND
Fluoranthene	g/s	< 2.39E-06	ND	< 2.43E-06	ND	< 2.49E-06	ND	< 2.44E-06	ND

Table ES-4: Summary of Semivolatile Organic Emissions (Continued)

Parameter	Units	C4bR1		C4bR4		C4bR5		Average	
Fluorene	g/s	< 2.39E-06	ND	< 2.43E-06	ND	< 2.49E-06	ND	< 2.44E-06	ND
Hexachlorobenzene	g/s	< 2.39E-06	ND	< 2.43E-06	ND	< 2.49E-06	ND	< 2.44E-06	ND
Hexachlorobutadiene	g/s	< 2.39E-06	ND	< 2.43E-06	ND	< 2.49E-06	ND	< 2.44E-06	ND
Hexachlorocyclopentadiene	g/s	< 1.20E-05	ND	< 1.21E-05	ND	< 1.25E-05	ND	< 1.22E-05	ND
Hexachloroethane	g/s	< 2.39E-06	ND	< 2.43E-06	ND	< 2.49E-06	ND	< 2.44E-06	ND
Hexachloropropene	g/s	< 2.39E-06	ND	< 2.43E-06	ND	< 2.49E-06	ND	< 2.44E-06	ND
Indeno(1,2,3-cd)pyrene	g/s	< 2.39E-06	ND	< 2.43E-06	ND	< 2.49E-06	ND	< 2.44E-06	ND
Isophorone	g/s	< 2.39E-06	ND	< 2.43E-06	ND	< 2.49E-06	ND	< 2.44E-06	ND
Isosafrole	g/s	< 4.79E-06	ND	< 4.86E-06	ND	< 4.98E-06	ND	< 4.88E-06	ND
Methapyrilene	g/s	< 1.20E-05	ND	< 1.21E-05	ND	< 1.25E-05	ND	< 1.22E-05	ND
3-Methylcholanthrene	g/s	< 4.79E-06	ND	< 4.86E-06	ND	< 4.98E-06	ND	< 4.88E-06	ND
Methyl methanesulfonate	g/s	< 2.39E-06	ND	< 2.43E-06	ND	< 2.49E-06	ND	< 2.44E-06	ND
2-Methylnapthalene	g/s	< 2.39E-06	ND	< 2.43E-06	ND	< 2.49E-06	ND	< 2.44E-06	ND
2-Methyl-5-nitroaniline	g/s	< 4.79E-06	ND	< 4.86E-06	ND	< 4.98E-06	ND	< 4.88E-06	ND
2-Methylphenol (o-Cresol)	g/s	< 2.39E-06	ND	< 2.43E-06	ND	< 2.49E-06	ND	< 2.44E-06	ND
3-Methylphenol (m-cresol)	g/s	< 1.20E-05	ND	< 1.21E-05	ND	< 1.25E-05	ND	< 1.22E-05	ND
4-Methylphenol (o-cresol)	g/s	< 2.39E-06	ND	< 2.43E-06	ND	< 2.49E-06	ND	< 2.44E-06	ND
Pentachloroethane	g/s	< 1.20E-05	ND	< 1.21E-05	ND	< 1.25E-05	ND	< 1.22E-05	ND
Naphthalene	g/s	< 2.39E-06	ND	< 2.43E-06	ND	< 2.49E-06	ND	< 2.44E-06	ND
1,4-Naphthoquinone	g/s	< 1.20E-05	ND	< 1.21E-05	ND	< 1.25E-05	ND	< 1.22E-05	ND
1-Napthylamine	g/s	< 2.39E-06	ND	< 2.43E-06	ND	< 2.49E-06	ND	< 2.44E-06	ND
2-Napthylamine	g/s	< 2.39E-06	ND	< 2.43E-06	ND	< 2.49E-06	ND	< 2.44E-06	ND
2-Nitroaniline	g/s	< 1.20E-05	ND	< 1.21E-05	ND	< 1.25E-05	ND	< 1.22E-05	ND
3-Nitroaniline	g/s	< 1.20E-05	ND	< 1.21E-05	ND	< 1.25E-05	ND	< 1.22E-05	ND
4-Nitroaniline	g/s	< 1.20E-05	ND	< 1.21E-05	ND	< 1.25E-05	ND	< 1.22E-05	ND
Nitrobenzene	g/s	< 2.39E-06	ND	< 2.43E-06	ND	< 2.49E-06	ND	< 2.44E-06	ND
2-Nitrophenol	g/s	< 2.39E-06	ND	< 2.43E-06	ND	< 2.49E-06	ND	< 2.44E-06	ND
4-Nitrophenol	g/s	< 1.20E-05	ND	< 1.21E-05	ND	< 1.25E-05	ND	< 1.22E-05	ND
4-Nitroquinoline-l-oxide	g/s	< 2.39E-06	ND	< 2.43E-05	ND	< 2.49E-05	ND	< 2.44E-05	ND
N-Nitroso-di-n-butylamine	g/s	< 2.39E-06	ND	< 2.43E-06	ND	< 2.49E-06	ND	< 2.44E-06	ND
N-Nitrosodiethylamine	g/s	< 2.39E-06	ND	< 2.43E-06	ND	< 2.49E-06	ND	< 2.44E-06	ND
N-Nitrosodimethylamine	g/s	< 2.39E-06	ND	< 2.43E-06	ND	< 2.49E-06	ND	< 2.44E-06	ND

Table ES-4: Summary of Semivolatile Organic Emissions (Continued)

Parameter	Units	C4bR1		C4bR4		C4bR5		Average	
N-Nitrosomethylethylamine	g/s	< 2.39E-06	ND	< 2.43E-06	ND	< 2.49E-06	ND	< 2.44E-06	ND
N-Nitrosodiphenylamine	g/s	< 2.39E-06	ND	< 2.43E-06	ND	< 2.49E-06	ND	< 2.44E-06	ND
N-Nitroso-di-n-propylamine	g/s	< 2.39E-06	ND	< 2.43E-06	ND	< 2.49E-06	ND	< 2.44E-06	ND
N-Nitrosomorpholine	g/s	< 2.39E-06	ND	< 2.43E-06	ND	< 2.49E-06	ND	< 2.44E-06	ND
N-Nitrosopiperidine	g/s	< 2.39E-06	ND	< 2.43E-06	ND	< 2.49E-06	ND	< 2.44E-06	ND
N-Nitrosopyrrolidine	g/s	< 2.39E-06	ND	< 2.43E-06	ND	< 2.49E-06	ND	< 2.44E-06	ND
Pentachlorobenzene	g/s	< 2.39E-06	ND	< 2.43E-06	ND	< 2.49E-06	ND	< 2.44E-06	ND
Pentachloronitrobenzene	g/s	< 1.20E-05	ND	< 1.21E-05	ND	< 1.25E-05	ND	< 1.22E-05	ND
Pentachlorophenol	g/s	< 1.20E-05	ND	< 1.21E-05	ND	< 1.25E-05	ND	< 1.22E-05	ND
Phenacetin	g/s	< 4.79E-06	ND	< 4.86E-06	ND	< 4.98E-06	ND	< 4.88E-06	ND
Phenanthrene	g/s	< 2.39E-06	ND	< 2.43E-06	ND	< 2.49E-06	ND	< 2.44E-06	ND
Phenol	g/s	< 1.20E-05	ND	< 1.21E-05	ND	< 1.25E-05	ND	< 1.22E-05	ND
1,4-Phenylenediamine	g/s	< 2.39E-06	ND	< 2.43E-05	ND	< 2.49E-05	ND	< 2.44E-05	ND
2-Picoline	g/s	< 4.79E-06	ND	< 4.86E-06	ND	< 4.98E-06	ND	< 4.88E-06	ND
Pronamide	g/s	< 4.79E-06	ND	< 4.86E-06	ND	< 4.98E-06	ND	< 4.88E-06	ND
Pyrene	g/s	< 2.39E-06	ND	< 2.43E-06	ND	< 2.49E-06	ND	< 2.44E-06	ND
Pyridine	g/s	< 4.79E-06	ND	< 4.86E-06	ND	< 4.98E-06	ND	< 4.88E-06	ND
Safrole	g/s	< 4.79E-06	ND	< 4.86E-06	ND	< 4.98E-06	ND	< 4.88E-06	ND
1,2,4,5-Tetrachloro-benzene	g/s	< 2.39E-06	ND	< 2.43E-06	ND	< 2.49E-06	ND	< 2.44E-06	ND
2,3,4,6-Tetrachlorophenol	g/s	< 1.20E-05	ND	< 1.21E-05	ND	< 1.25E-05	ND	< 1.22E-05	ND
o-Toluidine	g/s	< 2.39E-06	ND	< 2.43E-06	ND	< 2.49E-06	ND	< 2.44E-06	ND
1,2,4-Trichlorobenzene	g/s	< 2.39E-06	ND	< 2.43E-06	ND	< 2.49E-06	ND	< 2.44E-06	ND
2,4,5-Trichlorophenol	g/s	< 2.39E-06	ND	< 2.43E-06	ND	< 2.49E-06	ND	< 2.44E-06	ND
2,4,6-Trichlorophenol	g/s	< 1.20E-05	ND	< 1.21E-05	ND	< 1.25E-05	ND	< 1.22E-05	ND
1,3,5-Trinitrobenzene	g/s	< 1.20E-05	ND	< 1.21E-05	ND	< 1.25E-05	ND	< 1.22E-05	ND

Notes:
(A) Blank corrections have not been made to these data.
(B) Results have been reported considering both the RL and DL as reported on the laboratory results page for each fraction. To provide the most conservative emission estimates, calibrated target compounds that are not detected are reported at the RL. Values reported between the RL and MDL are incorporated into the emission estimate as reported.

Table ES-5: Summary of Dioxin/Furan Emissions

Parameter	Units	C4bR1		C4bR4		C4bR5		Average		CAA Permit Limit
Total 2,3,7,8-TetraCDD	g/s	< 2.75E-13	ND	< 2.13E-13	ND	< 2.54E-13	ND	< 2.47E-13	ND	---
Total 2,3,7,8-PentaCDD	g/s	< 4.48E-13	ND	< 2.29E-13	ND	< 2.54E-13	ND	< 3.10E-13	ND	---
Total 2,3,7,8-HexaCDD	g/s	< 8.73E-13	ND	< 8.05E-13		< 6.95E-13		< 7.91E-13	ND	---
Total 2,3,7,8-HeptaCDD	g/s	< 1.27E-12	ND	< 6.32E-13		< 6.22E-13		< 8.40E-13	ND	---
Total OctaCDD	g/s	< 1.29E-11		< 2.53E-12 ND	ND	< 2.29E-12 ND	ND	< 5.91E-12		---
Total 2,3,7,8-TetraCDF	g/s	< 1.11E-12		< 1.32E-12 ND		< 1.45E-12 ND		< 1.29E-12		---
Total 2,3,7,8-PentaCDF	g/s	< 1.05E-12	ND	< 7.34E-13	ND	< 1.15E-12	ND	< 9.81E-13	ND	---
Total 2,3,7,8-HexaCDF	g/s	< 2.01E-12	ND	< 1.82E-12		< 2.27E-12		< 2.03E-12	ND	---
Total 2,3,7,8-HeptaCDF	g/s	< 1.93E-12	ND	< 1.63E-12		< 1.64E-12		< 1.74E-12	ND	---
Total OctaCDF	g/s	< 2.99E-12	ND	< 2.61E-12 ND	ND	< 1.69E-12 ND	ND	< 2.43E-12	ND	---
Total CDD/CDF	ng-TEQ/dscm @ 7% O_2	< 0.0074		< 0.0057 ND		< 0.0072 ND		< 0.0067		0.20

Notes:
(A) Blank corrections have not been made to these data.
(B) Results have been reported considering both the RL and DL as reported on the laboratory results page for each fraction. To provide the most conservative emission estimates, calibrated target compounds that are not detected are reported at the RL. Values reported between the RL and MDL are incorporated into the emission estimate as reported.

Table ES-6: Summary of Volatile Organic Emissions Summary of Volatile Organic Emissions

Parameter	Units	C4bR1		C4bR4		C4bR5		Average	
Acetone	g/s	< 1.06E-05		9.61E-06		9.23E-06		< 9.82E-06	
Benzene	g/s	< 3.26E-07		< 3.38E-07		< 3.34E-07		< 3.33E-07	
Bromodichloromethane	g/s	< 9.02E-07		< 1.09E-06		< 7.36E-07		< 9.09E-07	
Bromoform	g/s	< 9.79E-07	ND	< 9.25E-07	ND	< 8.49E-07	ND	< 9.18E-07	ND
Bromomethane	g/s	< 1.96E-06	ND	< 1.85E-06	ND	< 1.70E-06	ND	< 1.84E-06	ND
1,3-Butadiene	g/s	< 1.26E-06		< 5.72E-07		< 7.71E-07		< 8.66E-07	
2-Butanone (Methyl Ethyl Ketone)	g/s	< 5.42E-06		< 5.20E-06		< 3.65E-06		< 4.76E-06	
Carbon Disulfide	g/s	< 7.04E-07		< 1.05E-06		< 1.12E-06		< 9.58E-07	
Carbon Tetrachloride	g/s	< 5.04E-06		< 1.24E-05		< 6.25E-06		< 7.90E-06	
Chlorobenzene	g/s	< 3.89E-07		< 3.98E-07		< 3.10E-07		< 3.66E-07	
Chloroethane	g/s	< 8.66E-07		< 6.36E-07		< 8.40E-07		< 7.81E-07	
Chloroform	g/s	< 1.79E-05		< 1.39E-05		< 1.20E-05		< 1.46E-05	
Chloromethane	g/s	< 3.35E-06		< 2.66E-06		< 2.77E-06		< 2.93E-06	
2-Chloropropane	g/s	< 4.93E-07	ND	< 4.66E-07	ND	< 4.27E-07	ND	< 4.62E-07	ND
Dibromochloromethane	g/s	< 9.79E-07	ND	< 6.20E-07		< 5.65E-07		< 7.21E-07	
1,2-Dibromoethane (Ethylene Dibromide)	g/s	< 9.79E-07	ND	< 9.25E-07	ND	< 8.49E-07	ND	< 9.18E-07	ND
Dibromomethane	g/s	< 9.79E-07	ND	< 9.25E-07	ND	< 8.49E-07	ND	< 9.18E-07	ND
cis-1,4-Dichloro-2-butene	g/s	< 1.96E-06	ND	< 1.85E-06	ND	< 1.70E-06	ND	< 1.84E-06	ND
trans-1,4-Dichloro-2-butene	g/s	< 1.96E-06	ND	< 1.85E-06	ND	< 1.70E-06	ND	< 1.84E-06	ND
1,1-Dichloroethane	g/s	< 7.95E-07		< 5.94E-07		< 7.72E-07		< 7.20E-07	
1,2-Dichloroethane	g/s	< 4.05E-07		< 4.16E-07		< 3.28E-07		< 3.83E-07	
1,1-Dichloroethene	g/s	< 1.51E-06		< 9.41E-07		< 1.24E-06		< 1.23E-06	
trans-1,2-Dichloroethene	g/s	< 3.97E-07		< 3.66E-07		< 3.41E-07		< 3.68E-07	
Dichlorodifluoromethane(Freon 12)	g/s	< 9.41E-07		< 8.47E-07		< 7.25E-07		< 8.38E-07	
1,2-Dichloropropane (Propylene Dichloride)	g/s	< 4.30E-07		< 3.21E-07		< 4.33E-07		< 3.95E-07	
cis-1,3-Dichloropropene	g/s	< 4.93E-07	ND	< 4.25E-07		< 4.02E-07		< 4.40E-07	
trans-1,3-Dichloropropene	g/s	< 4.93E-07	ND	< 4.66E-07	ND	< 4.27E-07	ND	< 4.62E-07	ND
Ethyl Benzene	g/s	< 3.86E-07		< 4.66E-07	ND	< 4.27E-07	ND	< 4.26E-07	
Hexane	g/s	< 8.84E-07		< 9.17E-07		< 7.92E-07		< 8.64E-07	
2-Hexanone	g/s	< 4.09E-06	ND	< 3.86E-06	ND	< 3.54E-06	ND	< 3.83E-06	ND

Table ES-6: Summary of Volatile Organic Emissions (Continued)

Parameter	Units	C4bR1		C4bR5		C4bR5		Average	
Iodomethane	g/s	< 1.96E-06	ND	< 1.85E-06	ND	< 1.70E-06	ND	< 1.84E-06	ND
4-Methyl-2-pentanone (Methyl Isobutyl Ketone)	g/s	< 4.09E-06	ND	< 3.86E-06	ND	< 3.54E-06	ND	< 3.83E-06	ND
Methylene Chloride	g/s	1.50E-05		1.07E-05		1.16E-05		1.25E-05	
2-Propanol	g/s	< 8.95E-05	ND	< 8.45E-05	ND	< 7.75E-05	ND	< 8.39E-05	ND
Styrene	g/s	< 4.93E-07	ND	< 4.66E-07	ND	< 4.27E-07	ND	< 4.62E-07	ND
1,1,1,2-Tetrachloroethane	g/s	< 4.93E-07	ND	< 4.66E-07	ND	< 4.27E-07	ND	< 4.62E-07	ND
1,1,2,2-Tetrachloroethane	g/s	< 9.79E-07	ND	< 9.25E-07	ND	< 8.49E-07	ND	< 9.18E-07	ND
Tetrachloroethene (Tetrachloroethylene)	g/s	< 4.93E-07	ND	< 4.66E-07	ND	< 4.27E-07	ND	< 4.62E-07	ND
Toluene	g/s	< 4.22E-07		< 3.57E-07		< 3.00E-07		< 3.60E-07	
1,1,1-Trichloroethane	g/s	< 4.50E-07		< 3.32E-07		< 3.30E-07		< 3.71E-07	
1,1,2-Trichloroethane (Methyl Chloroform)	g/s	< 9.79E-07	ND	< 9.25E-07	ND	< 8.49E-07	ND	< 9.18E-07	ND
Trichloroethene	g/s	< 5.21E-07		< 6.58E-07		< 5.85E-07		< 5.88E-07	
Trichlorofluoromethane (Freon 11)	g/s	< 1.41E-06		< 6.39E-07		< 5.29E-07		< 8.59E-07	
1,2,3-Trichloropropane	g/s	< 9.79E-07	ND	< 9.25E-07	ND	< 8.49E-07	ND	< 9.18E-07	ND
1,1,2-Trichloro-1,2,2-trifluoroethane (Freon 113)	g/s	< 1.58E-06		< 7.87E-07		< 1.19E-06		< 1.19E-06	
m,p-Xylene	g/s	< 8.43E-07		< 7.95E-07		< 7.91E-07		< 8.10E-07	
o-Xylene	g/s	< 4.93E-07	ND	< 4.66E-07	ND	< 4.27E-07	ND	< 4.62E-07	ND
Vinyl Acetate	g/s	< 1.96E-06	ND	< 1.85E-06	ND	< 1.70E-06	ND	< 1.84E-06	ND
Vinyl Bromide	g/s	< 1.96E-06	ND	< 1.85E-06	ND	< 1.70E-06	ND	< 1.84E-06	ND
Vinyl Chloride	g/s	< 3.85E-06		< 2.59E-06		< 3.92E-06		< 3.45E-06	

Notes:
(A) No blank corrections have been made to these data. If undetected in the analysis, the DL is reported.
(B) Results have been reported considering both the reporting and MDLs as reported on the laboratory results page for each fraction. To provide the most conservative emission estimates, calibrated target compounds that are not detected are reported at the RL. Values reported between the reporting and MDLs are incorporated into the emission estimate as reported.

Table ES-7: Summary of TOC Emissions

Parameter	Units	C4bR1	C4bR4	C4bR5	Average
Concentration	mg/m^3	< 11.59	< 10.64	< 13.62	< 11.95
Emission Rate	lbs/hr	< 2.83E-02	< 2.49E-02	< 2.96E-02	< 2.76E-02
Emission Rate	g/s	< 3.56E-03	< 3.14E-03	< 3.73E-03	< 3.48E-03

Note:
(A) Results have been reported considering both the RL and DL as reported on the laboratory results page for each fraction. To provide the most conservative emission estimates, calibrated target compounds that are not detected are reported at the RL. Values reported between the RL and MDL are incorporated into the emission estimate as reported.

Table ES-8: Summary of Acid Gases and Particulate Emissions

Parameter	Units	C4bR1	C4bR4	C4bR5	Average	RCRA/CAA Permit Limit
Hydrogen Chloride	g/s	< 9.33E-05 ND	< 9.95E-05	< 8.48E-05	< 9.25E-05 ND	---
Chlorine	g/s	< 1.78E-05 ND	< 2.08E-05 ND	< 1.86E-05 ND	< 1.91E-05 ND	---
Chloride Equivalents	ppmv @ 7% O_2	< 0.42	< 0.46 ND	< 0.47 ND	< 0.45 ND	21
Hydrogen Fluoride	g/s	< 9.33E-05 ND	< 1.09E-04	< 8.66E-05	< 9.62E-05 ND	---
Particulates[(1)]	gr/dscf @ 7% O_2	0.00050 ND	0.00074 ND ND	0.00074 ND ND	0.00066	0.013

Notes:
(A) Blank corrections have not been made to these data.
(B) Results have been reported considering both the RL and DL as reported on the laboratory results page for each fraction. To provide the most conservative emission estimates, calibrated target compounds that are not detected are reported at the RL. Values reported between the RL and MDL are incorporated into the emission estimate as reported.

Footnote:
(1) Due to a sampling method deviation incurred during C4bR5, the particulate results from C4bR2 were used for compliance purposes. C4bR5 particulate results are included for information purposes only in Appendix H.

Table ES-9: Summary of Trace Metal Emissions

Parameter	Units	C4bR1		C4bR4		C4bR5		Average		CAA Permit Limit
Antimony	g/s	< 2.73E-08		2.18E-08		< 2.85E-08		< 2.59E-08		---
Arsenic	g/s	< 4.10E-08		< 3.18E-08		< 5.11E-08	ND	< 4.13E-08		---
Barium	g/s	3.47E-07		2.59E-07		3.37E-07		3.14E-07		---
Beryllium	g/s	< 2.45E-08	ND	< 1.51E-08		< 2.56E-08	ND	< 2.17E-08		---
Boron	g/s	5.81E-06		2.80E-06		1.81E-06		3.47E-06		---
Cadmium	g/s	6.31E-09		1.11E-08		4.54E-09		7.33E-09		---
Chromium	g/s	2.37E-07		4.56E-07		2.28E-07		3.07E-07		---
Cobalt	g/s	2.76E-08		4.61E-08		8.83E-09		2.75E-08		---
Copper	g/s	1.89E-07		2.42E-07		1.81E-07		2.04E-07		---
Lead	g/s	6.79E-08		6.46E-08		4.78E-08		6.01E-08		---
Manganese	g/s	5.70E-07		1.37E-06		8.95E-07		9.46E-07		---
Mercury	g/s	2.00E-07		< 3.52E-07		< 2.91E-07		< 2.81E-07		---
Nickel	g/s	1.85E-07		2.30E-07		1.62E-07		1.92E-07		---
Phosphorus	g/s	< 2.02E-06		< 2.24E-06		< 2.30E-06		< 2.19E-06		---
Selenium	g/s	< 1.36E-07	ND	< 8.65E-08	ND	< 1.01E-07	ND	< 1.08E-07	ND	---
Silver	g/s	4.16E-08		5.12E-07		2.81E-07		2.78E-07		---
Thallium	g/s	< 2.45E-08	ND	< 2.50E-08	ND	< 2.56E-08	ND	< 2.50E-08	ND	---
Tin	g/s	< 5.05E-07		2.27E-07		< 2.89E-07		< 3.40E-07		---
Vanadium	g/s	< 1.22E-07	ND	< 1.24E-07	ND	< 1.28E-07	ND	< 1.25E-07	ND	---
Zinc	g/s	2.34E-06		2.44E-06		1.87E-06		2.22E-06		---
Arsenic, Beryllium, & Chromium	ug/dscm @ 7% O_2	< 1.72		< 3.061		< 2.09		< 2.29		23
Cadmium and Lead	ug/dscm @ 7% O_2	0.42		0.46		0.36		0.41		10
Mercury	ug/dscm @ 7% O_2	1.13		< 2.14		1.99		< 1.75		8.1

Notes:
(A) Blank corrections have not been made to these data.
(B) Results have been reported considering both the RL and DL as reported on the laboratory results page for each fraction. To provide the most conservative emission estimates, calibrated target compounds that are not detected are reported at the RL. Values reported between the RL and MDL are incorporated into the emission estimate as reported.

Table ES-10: Summary of Energetic Emissions

Parameter	Units	C4bR1			C4bR4			C4bR5			Average	
2,4-Dinitrotoluene	g/s	<	1.91E-07	ND	<	2.18E-07	ND	<	1.98E-07	ND	<	2.02E-07	ND
2,6-Dinitrotoluene	g/s	<	1.91E-07	ND	<	2.18E-07	ND	<	1.98E-07	ND	<	2.02E-07	ND
HMX	g/s	<	1.91E-07	ND	<	2.18E-07	ND	<	1.98E-07	ND	<	2.02E-07	ND
Nitroglycerin	g/s	<	7.63E-07	ND	<	8.62E-07	ND	<	7.99E-07	ND	<	8.08E-07	ND
RDX	g/s	<	1.91E-07	ND	<	2.18E-07	ND	<	1.98E-07	ND	<	2.02E-07	ND
2,4,6-Trinitrotoluene	g/s	<	1.91E-07	ND	<	2.18E-07	ND	<	1.98E-07	ND	<	2.02E-07	ND

Notes:
(A) Blank corrections have not been made to these data.
(B) Results have been reported considering both the RL and DL as reported on the laboratory results page for each fraction. To provide the most conservative emission estimates, calibrated target compounds that are not detected are reported at the RL. Values reported between the RL and MDL are incorporated into the emission estimate as reported.

1.0 INTRODUCTION

The US Army has designed and built a hazardous waste disposal facility for the destruction of the chemical munitions stockpile at Anniston Army Depot in Anniston, Alabama. The ANCDF is designed to dispose of chemical nerve agents, mustard agents, munitions containing agent, contaminated refuse, ton containers, liquid wastes, explosive, and propellant components. The ANCDF operates under RCRA Permit, AL3 210 020 027, issued pursuant to the Code of Alabama 1975 §§ 22-30-1-et. seq. Further references to this permit will be termed the RCRA Permit. ANCDF must also comply with its CAA Permit.

The SDC System allows ANCDF the ability to process intact explosively configured munitions. Under the requirements of the RCRA Permit and ADEM regulations, the SDC System must demonstrate an ability to effectively treat any hazardous waste such that human health and the environment are protected.

ANCDF proposed five (5) emissions test conditions for the SDC System:

- C1 - Conventional munitions emissions test without SIC in the SFU;
- C2 - Surrogate emissions test spiking chlorobenzene, in addition to metal oxides, without SIC in the SFU;
- C3 - Surrogate emissions test spiking chlorobenzene, in addition to metal oxides, with SIC in the SFU;
- C4a - Mustard-filled munitions emissions test while processing 105-mm projectiles with SIC in the SFU; and
- C4b - Mustard-filled munitions emissions test while processing 4.2-inch mortars with SIC in the SFU.

The emissions test results for C1, C2, C3, and C4a have been submitted to ADEM for review and approval. The emissions test results for C4b are contained in this report. Westinghouse Anniston (WA) has the responsibility for operating the SDC System and executing the emissions tests, as required. WA has contracted a third party, URS of Austin, Texas, to provide sampling and analysis support. URS-Austin performed emissions sampling, packaging, transporting samples to the off-site laboratories for analysis, and reporting of the analytical results.

1.1 GENERAL FACILITY INFORMATION

The following general facility information pertains to ANCDF:

Facility Name:	Anniston Chemical Agent Disposal Facility
Mailing Address	3580 Morrisville Road
	Anniston, AL 36201
Physical Address	Same
EPA ID Number	AL3 210 020 027
Facility Contact	Timothy K. Garrett
Telephone Number	(256) 238-1652

1.2 DATE AND TIMES OF SDC EMISSIONS TESTS

The SDC emissions test for C4b commenced on August 9, 2011, and was completed on August 12, 2011. A total of five (5) test runs were conducted; however, only C4bR1, C4bR4, and C4bR5 were used to compare emissions to permitted limits. At the conclusion of C4bR2, it was discovered that QP DAAMS tubes were not installed for sample collection thus rendering the run unacceptable for DRE and feed rate compliance purposes. With the exception of particulates, the C4bR2 sampling trains were analyzed for informational purposes. The C4bR2 particulate results were used for compliance purposes due to a sampling method deviation incurred during C4bR5 on the acid gas/particulate sampling train. Particulate results for C4bR5 have been included for informational purposes only. C4bR3 was invalidated due to CO exceeding permitted limits. Daily run summaries are provided in Section 8.1.

1.3 PROJECT PARTICIPANTS

The SDC was operated by WA personnel during the C4b emissions tests. IAW the approved ANCDF SDC Emissions Test Plan, the WA Test Director was the point of contact for any concerns associated with the emissions test. URS-Austin conducted the exhaust gas sampling with TestAmerica, Inc. providing the laboratory analytical support. Figure 1-1 presents the organizational chart for the SDC emissions test, including the department, name, and title of key personnel. ADEM (Air and Land Divisions) provided regulatory oversight. The Science Applications International Corporation and/or the Chemical Materials Agency and Washington Group International provided oversight of sampling activities for WA.

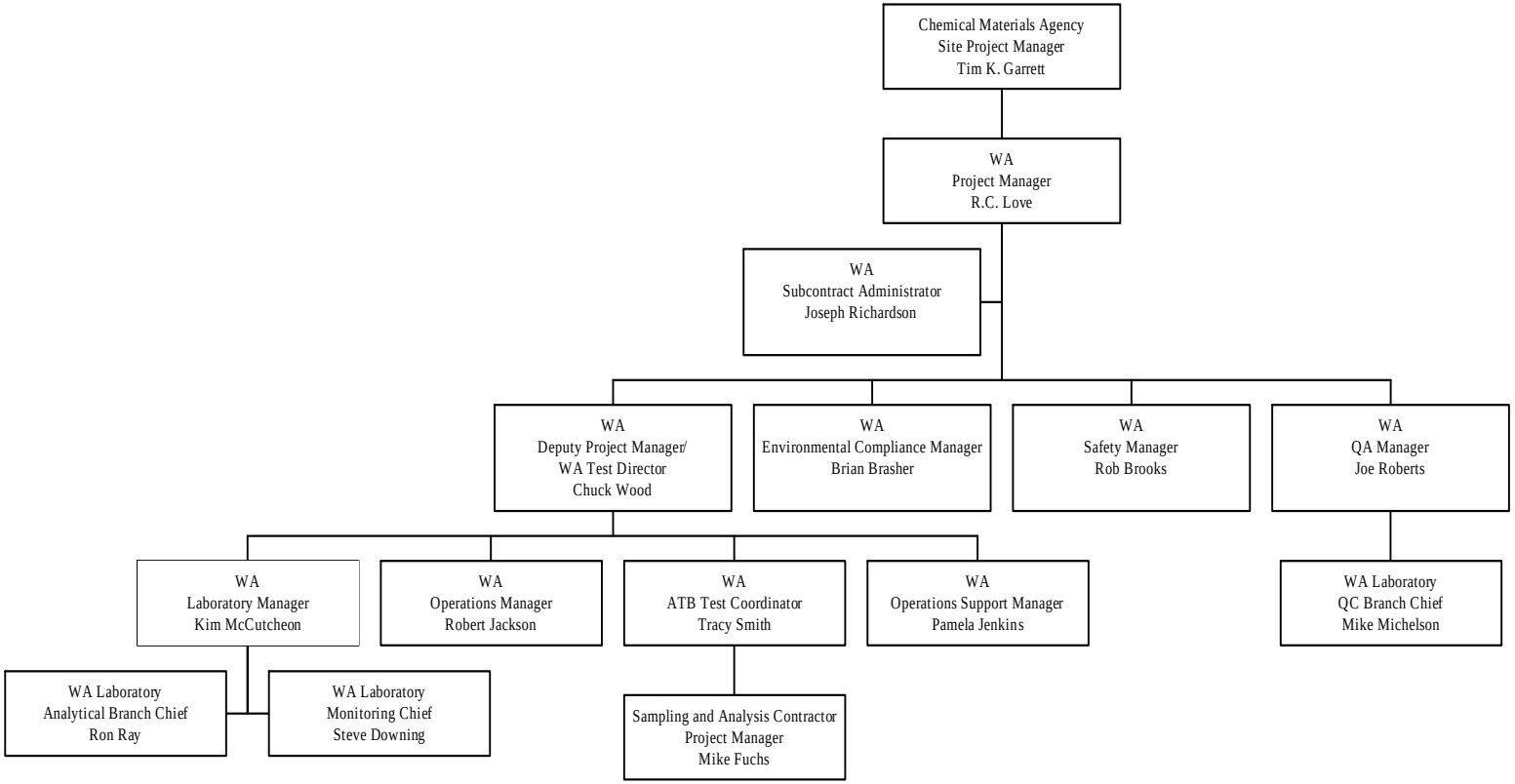

Figure 1-1: Organizational Chart

2.0 PROCESS DESCRIPTION

This section provides a brief process description of the SDC System, design information, process monitors, and monitoring points.

2.1 DESCRIPTION OF THE SDC SYSTEM

The SDC System is designed for destruction of munitions and munition components by indirect/conductive heating. The munitions are fed via a conveyor system. The solid scrap material remaining from the munitions is emptied into a scrap-box. The off-gas generated is cleaned and filtered in the Off-Gas Treatment (OGT) System.

The loading area is where munitions are placed in ammunition trays and loaded onto the loading conveyor. The loading conveyor is designed to accept multiple trays prior to any conveyor movement. After the loading conveyor is loaded, the loading operator leaves the area and the loading conveyor moves one (1) tray at a time into the SDC. As each item is conveyed from the loading room to the SDC for destruction the loading conveyor conveys it over to the munitions lift where it is elevated to the level of the first loading chamber. From the lift, the item is then conveyed to the apron of the first loading chamber.

At this point the loading system pauses until the SDC Control Room (CON) operator acknowledges that the tray is ready to load into the SDC. All movements from the loading conveyor to the first loading chamber are automatic. However, the CON operator has full control of all movements and can abort or reverse the movements as required. The loading conveyor and lift are also equipped with guides, interlocks, and sensors that prevent misalignment of trays or other problems and will halt movements automatically if problems arise.

Once at the apron of the first loading chamber and after the operator gives the go-ahead for the loading operation, the first loading chamber gate is opened to admit the tray. The first loading chamber gate is equipped with an inflatable gasket seal which prevents leakage from the first loading chamber. After the gate is opened, the tray containing the munition item is pushed into the munition feed tray located in the first loading chamber by an electrically operated ram equipped with sensors to detect misfeeds and other problems. After the tray is inserted, the ram withdraws and the first loading gate is closed and sealed. Next the second feed gate (which is also fitted with inflatable seals to prevent leakage) opens and a hydraulically operated ram pushes the munition into the second loading chamber. The ram is withdrawn and the second loading gate closes.

To transfer the waste military munition (WMM) from the second loading chamber to the SDC, the cradle and fragment valve rotate 90 degrees (º) as a unit. The fragment valve is a round circular plug shaped device that is positioned above the entrance to the SDC to prevent fragments from impacting the second loading chamber. When rotated, the fragment valve moves out of the opening to the SDC and the cradle is aligned discharging the munitions to the SDC. Once the munitions have been delivered to the SDC, the cradle and fragment valve are rotated in the opposite direction, lining up the fragment valve over the opening to the SDC and the cradle to receive the next load. Once over the SDC, a hydraulic piston presses down on the fragment valve to hold it in position. Loading chamber gates are configured and designed to contain detonations or fragments within them equal to the design limit of the rest of the chamber.

After the munitions are fed to the inner detonation chamber the items heat resulting in a detonation and/or deflagration. As there is insufficient air contained within the detonation chamber to support complete combustion of the detonation products, the result is a pyrolysis reaction, which breaks down the detonation gases to simple compounds which are then further treated in the OGT System.

A description of key equipment is provided below.

Conveyor System: The conveyor system is electrically powered and consists of a series of conveyors which transport the ammunition trays to the lift, which lifts the trays up to loading chamber 1, and electrical pusher which pushes the tray into loading chamber 1.

Gate 1: Gate 1 is the inlet hatch to loading chamber 1. It is a sliding gate and operated hydraulically. The gate is sealed gastight with 1 pneumatic seal. An electric pusher is mounted on gate 1 which pushes the package into loading chamber 2.

Gate 2: Gate 2 is the inlet gate to loading chamber 2. It is a sliding gate and operated hydraulically. The gate is sealed gastight with 2 pneumatic seals. It is designed to withstand explosions up to 6.6 pounds (lbs) trinitrotoluene equivalent.

Loading Chamber 1/2 and Cradle: Between loading chamber 1 and 2 there is a gastight gate. Loading chamber 2 has a built in hydraulic powered cradle. The cradle is designed to withstand the pressure and the fragments from the detonation chamber. When the tray has been pushed in loading position the cradle turns 90º in clock wise direction and the package falls down into the detonation chamber. The cradle then turns back and a fragment valve provides a fragment shield by means of a hydraulically operated cone that seals off loading chamber 2 against the SDC. Both positions of the cradle may be monitored by cameras so that both a successful loading of the tray and a successful fall into the SDC can be assured.

Destruction of Munitions in the SDC: The munition is dumped into the detonation chamber and lands on the hot scrap material at the bottom of the chamber. The munitions are heated until, deflagration or detonation and the explosives in the munitions are destroyed. The destruction process is identified either by the dynamic pressure sensor and/or the static pressure sensor, aided by a sound sensor.

The heat is generated by heating elements in the space between the chamber and the shell. During the destruction process, pressure and temperature inside the SDC are monitored and recorded in the CON. Heated sweep air is continuously added to the static kiln during operation. The gases from the destruction process will be transferred into and cleaned by the OGT System.

To eliminate potential overpressure peaks coming from the SDC, the off gases shall pass through a buffer tank in order to reduce such pressure peaks before the gases are transferred to the downstream OGT System.

Upper Detonation Chamber (UDC): The upper part of the SDC is mounted to the outlet flange of loading chamber 2. Connections for incoming process air, outlet exhaust gases, temperature sensors and pressure gauges are placed on the SDCs upper part.

Lower Detonation Chamber (LDC): The lower part of the SDC has an inner fragment shield and an outer chamber. The space between the chamber and scrap chute is filled with insulation. Electrical resistance heating elements are located in the bottom.

Elevating and Turning System: When emptying the LDC, it is first lowered by the hydraulically powered mechanical lifting jacks that make up the SDC Lifting System (DCLS). The rotation of the LDC is made by a hydraulic motor, connected to the LDC with a chain which makes up the SDC Rotating System (DCRS).

Locking and Sealing System: The upper and lower parts of the SDC are locked to each other with a locking ring during destruction. The locking ring is maneuvered by two (2) hydraulic cylinders. For the emptying procedure the locking ring is turned to the open position and lower part of the SDC is lowered and turned. The connection between upper and lower part of the SDC is sealed by three (3) pressurized pneumatic gaskets during destruction.

Hydraulic Power Unit: The hydraulic power unit provides power to operate the elevating and turning system for the SDC (DCLS), tilting unit, gates 1 and 2, locking ring, and pushers. It has a built in backup pump which is driven by the uninterrupted power supply of the SDC facility.

Scrap Chute and Scrap Conveyor: When operators determine (based on the material being fed) the SDC should be emptied of treated material, the LDC is lowered and then turned 180º so the scrap material can fall down the scrap chute to the scrap conveyor.

Scrap Conveyor System: Scrap conveyor 1 transports the scrap material to scrap conveyor 2. Scrap conveyor 2 moves the scrap onto the vibration table. Scrap conveyor 1 and 2 are slow moving and allow the scrap to cool to a temperature where the material may be inspected. The vibration table distributes the scrap evenly and delivers it onto the scrap inspection conveyor. It also separates dust from the scrap which is collected underneath in a basket. The scrap inspection conveyor allows visual inspections of WMM after treatment has occurred in the SDC.

Detonation Chamber Air Heater: The air heater heats the process air. This hot air is led into the SDC to aid the destruction process.

Reserve Flush Tank: The reserve tank contains the water based solution which may be used to flush loading chamber 1 as needed after any loading sequence. Process air provides the needed pressure to drive the solution into loading chamber 1. When necessary, the solution can be emptied from loading chamber 1 into the SDC for destruction. Otherwise it will flow back into the reserve flush tank.

OGT System: The OGT System consists of a buffer or equalization tank which smoothes out pressure pulses caused by detonation within the SDC, followed by an orifice which also helps to smooth the flow going to downstream components of the system. Following the orifice, the gas is heated to approximately 2,000ºF for at least two (2) seconds, then cooled by a quench followed by a dry scrubber filter and then remaining contaminants are removed by two (2) wet scrubber stages. The last step is a multistage exhaust filtration system, which acts as a safeguard backing up the OGT System before releasing the off gas to the environment. It should be noted that the entire OGT System from the exit of the SDC to the thermal oxidizer is maintained at adequate temperature to reduce condensation. Descriptions of these items are provided below.

Buffer Tank: This unit is designed to smooth gas pressure and volume surges from the SDC that occur whenever a munition detonates or deflagrates within the SDC. By smoothing surges the design of downstream equipment is simplified and the equipment is better able to operate near its optimum design flow rate. This allows more consistent removal of contaminants. The buffer tank is comprised of a cone bottom cylindrical tank made of stainless steel. The inlet and outlet of the tank is configured in such a way that the tank also acts as a cyclone, allowing the

removal of large particles of ash and small metal fragments from detonations. These materials are collected in the bottom of the conical tank section and are periodically and automatically removed using a lock hopper type rotary valve. The entire tank and all piping are maintained at a temperature using electric heaters and insulation.

Orifice: The orifice plate also helps to smooth the flow of gases presented to downstream equipment. The orifice plate is comprised of a sharp edged orifice located in a stainless steel metal plate which is in turn sandwiched between two (2) pipe flanges. This plate is replaceable if needed, and is also maintained at temperature using electric heaters and insulation.

Process Ventilation Cyclone, Filter, and Fan: The fan drives the process ventilation for the SDC. The cyclone and filter remove dust from the process ventilation. The dust is transferred to the air mainly from the scrap emptying sequence and the scrap conveyor system.

Thermal Oxidizer: The off gases resulting from the pyrolysis process in the SDC are transferred to a thermal oxidizer. The thermal oxidizer is designed to accept all gases resulting from one (1) feed cycle to the SDC. The thermal oxidizer is oversized for this peak flow and is actually able to accommodate twice the flow that is anticipated. The OGT System is sufficiently designed to accommodate feed rates greater than the design for the SDC.

The thermal oxidizer uses natural gas or propane as a fuel to enable the development of the high temperatures required. The thermal oxidizer design is based on a retention time of two (2) seconds or more at approximately 2,000ºF for the peak load expected from the upstream SDC. An additional flow of secondary air is automatically added to ensure an oxidizing environment. The gases to be treated are fed tangentially via a ring system to ensure proper treatment of the contaminated gases.

Spray Dryer: The off gas coming from the thermal oxidizer exits with a temperature of approximately 2,000ºF. This off gas is quickly cooled to approximately 350ºF by the injection of water into the gas stream. The injected water will evaporate and the energy needed for the evaporation is taken from the off gas so that the gas will rapidly cool. The water injection or quench takes place in a spray dryer that is positioned at the inlet of the next treatment stage, the acid scrubber. The spray dryer uses spent scrubber liquids for the water feed and subsequently evaporates this water, leaving dry salts and particulates for disposal and removing the need for a water treatment system to process spent scrubber solutions. The dry salts and particulates are automatically removed from the bottom of the spray dryer and collected in a container using a rotary lock hopper type valve for disposal.

Bag House Filter: A bag house filter is located after the spray dryer. This unit is comprised of a filter system where the bags have a layer of absorbent material added to them which is automatically renewed on a periodic basis. Most of the dust and heavy metals are removed in this unit. The removal occurs in a zone on the inside of the bags where an absorbent sodium bicarbonate is added. The ratio of the material may be adjusted to fit the application. The powdered mixture is fed continuously from a hopper by a screw feeder and pneumatic feed system to the bag house where it adds to the layer of spent material on the inside of the bags. This allows a fresh surface to be presented to the incoming gases at all times. Periodically when the pressure drop across the filter exceeds a set point, the bags are emptied using a pulse jet, and the spent solids with the collected process dust is processed through a rotary lock hopper valve into a drum for disposal.

Quench Venturi: In the next step the air is cooled from approximately 350 to 170ºF. This is done with scrubber solution water from the acid scrubber. The water remaining from this step is cooled and recycled to the acid scrubber sump.

Acid Scrubber: The off gas in the acid scrubber will be further cooled to the operating temperature of the scrubber, which is approximately 150ºF. The acid scrubber is a counter current design where the scrubber liquid flows counter current to the gas flow. The acid scrubber will remove several contaminants from the off gas. Initially, dust is removed by washing out solid particles in the washing tower. Acid gases, volatile and semi-volatile heavy metals will also be removed from the off gas. These components will dissolve in the scrubber liquid making it acidic. The scrubber pH will be controlled by a pH controller that ensures that the liquid has a sufficiently high pH value to obtain the necessary concentration gradient to wash the gases. The resistivity of the scrubber liquid will be monitored. In case of a low resistivity value indicating a high dissolved salt content the scrubber liquid will be partly replaced by fresh water. Excess scrubber liquid is then transferred to the spray dryer for evaporation and salt removal. Scrubber liquid is pumped from the bottom of the scrubber column to the top and is distributed inside the column by spray nozzles. The off gas enters the column from a position located just above the column sump and streams from the bottom to top of the column. In order to ensure an adequate mixing and contact between the liquid and the gas, the columns are filled with a column packing material. As a safeguard, the temperature of the off gas inlet will be monitored. In case of a high temperature off gas, due to a quench malfunction, an emergency water injection will be switched on.

Neutral Scrubber: After the acid scrubber the off gas is fed to the neutral scrubber. The neutral scrubber removes any residual contaminants that passed through the dry and acid scrubbers. The neutral scrubber has the same dimensions and is built using the same construction principles as the acid scrubber. The neutral scrubber also operates with a counter current gas liquid flow. To obtain a good material exchange between the gas and the liquid, a column packing is used.

The scrubber liquid is monitored by a pH controller. Two (2) solutions may be used to maintain the proper neutral pH. One (1) is a sodium hydroxide solution and the other is a hydrogen chloride solution. The amount of scrubber liquid in the neutral scrubber is controlled by a level transmitter in the sump of the scrubber column. To obtain a constant quality in the scrubber a continuous waste stream is taken out through the column sump, which goes into the spray dryer. This stream is replaced by fresh caustic solution as needed.

Induced Draft (ID) Fans: The ID fans are located downstream after the particle filter. The ID fans ensure that the pressure of the off gas is slightly below atmospheric pressure. The pressure is controlled by pressure transmitters. The speed of the ID fans is adjustable by a frequency controller. The control of the pressure ensures that no contaminated off gas above emissions limitations is released into the environment. The ID fans work continuously during the operation of the plant. Two (2) redundant fans are installed. If one (1) fails, the other will automatically take over.

SFU System: All gases exiting the OGT System are transferred to a final SFU System. The system provides positive backup capacity to the main OGT in the event of system malfunction. The SFU System is an exhaust filtration unit. The exhaust unit is designed and built IAW the requirements by the US Army's Chemical Demilitarization program. The SFU System is

designed as a series of filters - prefilter, high-efficiency particulate air (HEPA), charcoal, space, charcoal HEPA, and charcoal (if applicable).

The exhaust filter housings are made of stainless steel and are equipped with differential pressure monitors on all filters to ensure adequate flow and to monitor for when a filter needs to be replaced. Filters within the unit use a bag in / bag out system so that the operator changing the filters never comes in contact with the actual filter media. The systems include an ID fan to provide negative pressure in the system to protect against leakage.

Stack: The stack for discharge of cleaned gases meets the requirements of the American Conference of Governmental Industrial Hygienist industrial ventilation manual.

2.2 SUMMARY OF PROCESS MONITORS AND FLUE GAS ANALYZERS

2.2.1 Location and Description of the Process Control System

The proper operation of the process control system is necessary to ensure consistent compliance with all RCRA/CAA Permit conditions and safe, efficient operation of the SDC System. The CON is the remote location where the SDC System is normally operated. The CON houses an operator control console, which includes closed-circuit television monitors for observing operations at various locations, as well as emergency shutdown controls. All remote operations, with exception of emergency shutdown, are performed through an operator keyboard using the equipment controls and indications displayed on advisor screens. Processing and sequencing operations are controlled automatically through the programmable logic controller (PLC), which continuously communicates with the operator console in the CON. The automatic control system provides continuous automatic control of the treatment process.

The PLC is also connected to a dedicated alarm concentrator that is programmed to continually scan for alarm conditions and to initiate alarms in the CON, alerting the operator of abnormal conditions. The process control software was designed to provide pre-alarms in the CON. These pre-alarms are used to warn the CON operator in time to take corrective action should a process variable approach a FPI or equipment shutdown condition.

The PDARS logs and notes the time of all abnormal conditions, as well as the starting and stopping of equipment and operator entries. This system is also used to record process data such as temperature, pressure, and waste feed intervals. PDARS records data at varying intervals. The PDARS takes instantaneous readings at a maximum interval of fifteen seconds and records averages on a one (1)-minute basis. All PDARS data collected for RCRA/CAA instrumentation is included in the ANCDF operating record as required by the CAA/RCRA Permits and applicable regulations.

2.2.2 Flue Gas Monitoring

The SDC System flue gases were monitored for select criteria pollutants by facility and TRM CEMS. The facility CEMS monitors the flue gas for CO in the exhaust blower duct and is programmed into the FPI System (see Table 2-1). The TRM CEMS are provided and operated by URS-Austin and monitor the SDC System for SO_2 and NO_x for the duration of the emissions test.

Table 2-1: FPI Conditions for Mustard and Conventional WMM(1)

Item No.	Instrument Tag Number	Process Data Description	Range	Parameter
SDC-01	PI 12007	Detonation Chamber Static Pressure Indication	MAX	362 psi
SDC-02	TI 12021	Detonation Chamber Temperature Indication	MIN	1,000ºF
SDC-03	TICS 310 AVG	Thermal Oxidizer Temperature	MIN	1,400º F
SDC-04	PICS 310 AVG	Thermal Oxidizer Pressure	MAX	0.0 psi
SDC-05	TICS 320 AVG	Spray Dryer Temperature	MAX	500ºF
SDC-06	PDS 33001	Bag-house Differential Pressure	MAX	0.3 psi
SDC-07	FIA 34204	Acid Scrubber Process Flow	MIN	1.0 cfm
SDC-08	FIS 34203	Quench Tower Flow	MIN	0.5 cfm
SDC-09	TIS 34003, 34004	Quench Tower Temperature	MAX	190ºF
SDC-10	TIA 37002	Neutral Scrubber Discharge Temperature	MAX	200ºF
SDC-11	SDC 038 A/B/C	Chemical Agent Emissions	MAX	0.03 mg/m^3 (instantaneous)
SDC-12	SDC 038 A/B/C	Chemical Agent Emissions	MAX	0.006 mg/m^3 (ROHA)
SDC-13	AAHH-900	CO Concentration	MAX	100 ppmv, dry basis @ 7% O_2 (ROHA)

Footnote:
(1) Operational parameter(s) interlock will prohibit the transfer from loading chamber 1 into chamber 2 until all conditions are met or within range.

3.0 TESTING PROGRAM OVERVIEW

This section summarizes the SDC emissions testing objectives, the planned test program, the actual testing performed, and any deviations from the approved ANCDF SDC Emissions Test Plan which is included as Appendix B.

3.1 SDC EMISSIONS TESTING OBJECTIVES

The emissions tests were performed to demonstrate the following objectives as outlined in the ANCDF SDC Emissions Test Plan:

- Demonstrate DRE of ≥ 99.9999% for mustard agent at a feed rate of up to 72 lbs/hr of mustard agent;
- Demonstrate a ROHA ASC of < 0.006 mg/m^3 and/or instantaneous ASC of < 0.03 mg/m^3 for mustard agent; and
- Demonstrate that emissions are less than the screening levels established in the HRA.

3.2 PLANNED EMISSIONS TESTING PROGRAM

The purpose of the SDC emissions testing was to demonstrate the objectives discussed under Section 3.1 by executing a minimum of three (3) test runs. The SDC System was operated at normal conditions to confirm the system operating conditions. Normal system data was collected in addition to the specific sampling and analyses performed to determine the DRE and to confirm the efficiency of the SDC System. The sampling matrix for exhaust gas is found in Table 3-1.

3.3 SUMMARY OF ACTUAL TESTING PERFORMED

The actual testing performed was consistent with the planned program as summarized in Section 3.2 and fully described in the approved ANCDF SDC Emissions Test Plan. Table 3-1 provides a summary of the actual testing that was performed. Table 3-2 summarized deviations from the approved ANCDF SDC Emissions Test Plan. The results of the testing are in Section 8 for the exhaust gas emissions.

Table 3-1: Sampling Matrix for Exhaust Gas

Analyte	Sampling Method	Planned	Performed
Traverse Points	US EPA Method 1	Yes	Yes
Flue Gas Velocity	US EPA Method 2	Yes	Yes
Oxygen and Carbon Dioxide	US EPA Methods 3B	Yes	Yes
Moisture	US EPA Method 4	Yes	Yes
Sulfur Dioxide	US EPA Method 6C	Yes	Yes
Nitrogen Oxides	US EPA Method 7E	Yes	Yes
Semivolatile Organics	SW-846 Method 0010	Yes	Yes
Dioxins/Furans	SW-846 Method 0023A	Yes	Yes
Volatile Organics	SW-846 Method 0030	Yes	Yes
Total Organic Compounds	SW-846 Method 0010 and 0040	Yes	Yes
Acid Gases and Particulates	US EPA Method 26A	Yes	Yes
Trace Metals	US EPA Method 29	Yes	Yes
Energetics	US EPA Modified Method 5	Yes	Yes
Carbon Monoxide	US EPA Method 10	Yes	Yes

Table 3-2: Deviations Summary

SAP/QAPP	Deviation	Basis and Impact
SAMPLING		
Section 6.1.9	The probe temperature of the M26A train was maintained within the method-specified range of 248 to 273ºF at all times with the exception of the last 25 minutes of C4bR4 where a probe temperature of 274ºF was recorded.	No significant impact. It is not expected that the one (1) degree temperature excursion impacted the reported particulate or acid gas results.
	The filter temperature of the M26A train was maintained within the method-specified range of 248 to 273ºF at all times with the exception of the first 15 minutes in the second port of C4bR5 where a maximum filter temperature of 334ºF was recorded.	C4bR5 particulate results may be biased low. The filter temperature was recorded at 61ºF over the maximum temperature established by the sampling method. While acid gas emissions are not expected to be impacted by this circumstance, it is possible that more volatile particulate would not have been recoverable for this run. Though the C4bR5 filter particulate catch is consistent with those measured during the other runs, the particulate results for C4bR5 should be considered estimated. For compliance comparison purposes, particulate results for C4bR2 were used in lieu of C4bR5. Particulate emission results for C4bR5 are summarized in Appendix H.
Table A-1	All isokinetic sampling trains collected dry sample volumes that were in excess of 3 m^3 as required by the SAP/QAPP. However, the volume of the M26A train for C4bR5 when corrected to standard conditions is < 3 m^3 (2.9 dscm or 102.279 dscf was collected).	No impact. The sample volume collected is sufficient to demonstrate particulate and acid gas emissions.
Table A-3	For C4bR2, a QP tube was not aspirated with the DAAMS DRE samples and QP results were not available for this run.	There is increased uncertainty for the C4bR2 DAAMS DRE measurement. Though valid DAAMS DRE samples were collected and analyzed, an associated QP is not available to assess loss of analyte during sampling or interferences. The C4bR2 DAAMS DRE result should be considered estimated.
Table A-4	For C4bR3, the DRE DAAMS sampling time exceeded 240 minutes.	No impact. During C4bR3, the DRE DAAMS sampling array was started approximately 15 minutes prior to the isokinetic sampling trains commencing sampling of the second port. The DRE DAAMS completed sampling at the same time as the isokinetic sampling trains and “no credit” was taken for the additional sample time when determining total volume sampled for DRE calculations.
ANALYTICAL		
Table A-6	Exhaust gas analyses were generally performed within all required QC criteria. However, there were some sample analyses where not all QC criteria were met. Specific failures are addressed in Section 7.6.	No impact. All reported exhaust gas data is considered usable. There are some results that should be considered estimated. Usability of each sample analysis is discussed in Section 7.6.
Table A-9	A trip blank (aqueous) for the M0040 sampling train was not included with the sample shipment.	Though any potential contamination from shipment of the sample could not be assessed, the reported sample results are not impacted by this circumstance as they are not corrected for trip blank contamination.

4.0 FEED PROHIBITIVE INTERLOCKS

FPI for the SDC System were established in the approved ANCDF SDC Emissions Test Plan. These FPI, which are presented in Table 2-1, were identified to ensure emissions do not exceed the performance standards as stated in RCRA Permit Condition V.D.3 and continuously monitored and recorded by the PDARS (see Appendix A). The PDARS data consist of one (1)-minute values calculated from the average of four (4) 15-second readings. Data recorded or calculated by the PDARS includes the average, minimum, and maximum values collected for each FPI parameter and are summarized in Table 4-1.

4.1 FEED RATES

Table 4-2 presents a summary of the chemical agent rates for each test run. The average chemical agent feed rate was 62.23, 56.62, and 51.11 lbs/hr for C4bR1, C4bR4, and C4bR5, respectively, with a condition average of 56.65 lbs/hr using an average destruction timer of 13 minutes.

With the exception of nickel and zinc, the metal feed rates were demonstrated during C3 and approved by ADEM in a previous submittal. As summarized in Table 4-3, the maximum feed rate for nickel and zinc was demonstrated during C4b at 0.025 and 0.069 lbs/hr, respectively.

4.2 EXHAUST GAS PARAMETERS

During the SDC emissions testing, monitoring of all exhaust gas parameters was conducted. These parameters included the exhaust gas parameters listed in Table 3-1 and the key process parameters identified in Table 2-1. Results of the exhaust gas sampling, including emission rates and key process parameter data are presented in Section 8. The following subsections present results for exhaust gas temperature and velocity, air pollution control equipment (APCE) parameters, and CO concentrations and rates.

4.2.1 Exhaust Gas Temperature

The detonation chamber and thermal oxidizer temperatures were continuously measured and recorded using temperature indicating controller as summarized in Table 4-1.

4.2.2 Exhaust Gas Velocity

The detonation chamber flow rate was continuously measured and recorded using a pressure indicating sensor as summarized in Table 4-1.

4.2.3 APCE Control Parameters

The key APCE parameters for the SDC System are listed in Table 2-1. Each of the key APCE parameters was continuously measured and recorded during each test run as summarized in Table 4-1.

4.2.4 CO Concentration

The CO concentration was continuously monitored and recorded using a facility CEMS using an analyzing indication transmitter which provides the data from the monitor of record. As summarized in Table 4-1, all recorded values are expressed as ppmv, dry basis and corrected to 7% O_2.

4.3 FUGITIVE EMISSION SOURCES

The SDC System, excluding the SFU, is housed in a sprung structure. The primary means of controlling fugitive emissions from the SDC System is by maintaining the thermal oxidizer at a pressure that is below the room or structure pressure in which it is located. The average of the average thermal oxidizer pressures recorded were approximately -0.071 psi for C4b. Additionally, the sprung structure that houses the SDC System is maintained at a negative pressure with respect to the atmosphere by regulating the fan speed.

Table 4-1: Summary of FPI Conditions

Parameter/Description	Instrument Tag Number	Range	Units	Statistic	C4bR1	C4bR4	C4bR5	Average
SDC-FPI-01 Detonation Chamber Pressure	PISA 12007	< 362	psi	Minimum	7.61	3.50	0.063	3.72
				Maximum	18.32	13.01	9.80	13.71
				Average	10.42	6.29	2.22	6.31
SDC-FPI-02 Detonation Chamber Temperature	TICSA 12021	> 1,000	°F	Minimum	1,449.51	1,449.58	1,441.62	1,446.90
				Maximum	1,450.67	1,450.59	1,457.40	1,452.89
				Average	1,450.04	1,450.00	1,449.93	1,449.99
SDC-FPI-03 Thermal Oxidizer Temperature	TIC 31001, 31002, and 31003	> 1,400	°F	Minimum	1,855.83	1,723.48	1,872.88	1,817.39
				Maximum	2,104.54	2,061.86	2,088.14	2,084.85
				Average	1,914.09	1,914.48	1,930.36	1,919.64
SDC-FPI-04 Thermal Oxidizer Pressure	PIC 31006, 31007, and 31008	< 0.0	psi	Minimum	-0.105	-0.093	-0.095	-0.098
				Maximum	-0.035	-0.043	-0.048	-0.042
				Average	-0.071	-0.071	-0.071	-0.071
SDC-FPI-05 Spray Dryer Temperature	TIC 32009, 32010, and 32011	< 500	°F	Minimum	375.24	382.03	382.03	379.77
				Maximum	403.98	398.13	398.61	400.24
				Average	390.25	390.14	390.15	390.18
SDC-FPI-06 Bag House Pressure	PDS 33001	< 0.3	psi	Minimum	0.060	0.070	0.060	0.063
				Maximum	0.080	0.095	0.095	0.090
				Average	0.069	0.086	0.084	0.080
SDC-FPI-07 Acid Scrubber Flow Rate	FIS 34204	> 1.0	cfm	Minimum	3.21	3.28	3.28	3.26
				Maximum	3.58	3.67	3.33	3.53
				Average	3.26	3.33	3.30	3.30
SDC-FPI-08 Quench Tower Flow Rate	FIS 34203	> 0.5	cfm	Minimum	2.70	2.64	2.79	2.71
				Maximum	2.89	2.82	2.82	2.84
				Average	2.86	2.80	2.80	2.82

Table 4-1: Summary of FPI Conditions (Continued)

Parameter/Description	Instrument Tag Number	Range	Units	Statistic	C4bR1	C4bR4	C4bR5	Average
SDC-FPI-09 Quench Tower Temperature	TI 34003	< 190	°F	Minimum	163.61	164.77	162.61	163.66
				Maximum	170.82	170.29	169.58	170.23
				Average	166.85	167.43	165.31	166.53
SDC-FPI-09 Quench Tower Temperature	TI 34004	< 190	°F	Minimum	163.43	164.67	162.38	163.49
				Maximum	170.29	169.93	169.28	169.83
				Average	166.55	167.19	165.10	166.28
SDC-FPI-10 Neutral Scrubber Temperature	TIA 37002	< 200	°F	Minimum	163.82	167.71	164.63	165.39
				Maximum	182.25	182.87	182.89	182.67
				Average	178.28	179.58	177.02	178.29
SDC-13 CO Concentration	AAHH-900	< 100 (ROHA)	ppmv (dry basis @ 7% O_2)	Minimum	0.44	0.23	0.16	0.28
				Maximum	0.98	1.55	0.58	1.04
				Average	0.64	0.51	0.30	0.48

Table 4-2: Summary of Tray Weights and Time Intervals

Run	Port (Sampling Time)	Tray	Munition Type	Munitions per tray	HD Agent (lbs/tray)	Energetics (lbs/tray)	Entered DC (hr:min)	Interval (minutes)
C4bR1	Conditioning	1	105mm (HD)	4	11.88	1.28	8:31	---
	Conditioning	2	105mm (HD)	4	11.88	1.28	9:23	52
	Conditioning	3	105mm (HD)	4	11.88	1.28	9:40	17
	Conditioning	4	105mm (HD)	4	11.88	1.28	9:55	15
	Conditioning	5	105mm (HD)	4	11.88	1.28	10:39	44
	Conditioning	6	4.2inch (HD)	2	12.00	0.288	10:52	13
	Port 1	7	4.2in (HD)	2	12.00	0.288	11:03	11
		8	4.2in (HD)	2	12.00	0.288	11:15	12
		9	4.2in (HD)	2	12.00	0.288	11:27	12
		10	4.2in (HD)	2	12.00	0.288	11:39	12
		11	4.2in (HD)	2	12.00	0.288	11:51	12
		12	4.2in (HD)	2	12.00	0.288	12:03	12
		13	4.2in (HD)	2	12.00	0.288	12:15	12
		14	4.2in (HD)	2	12.00	0.288	12:28	13
		15	4.2in (HD)	2	12.00	0.288	12:40	12
		16	4.2in (HD)	2	12.00	0.288	12:52	12
		17	4.2in (HD)	2	12.00	0.288	13:04	12
	Conditioning	18	4.2in (HD)	2	12.00	0.288	14:04	---
	Port 2	19	4.2in (HD)	2	12.00	0.288	14:17	13
		20	4.2in (HD)	2	12.00	0.288	14:28	11
		21	4.2in (HD)	2	12.00	0.288	14:40	12
		22	4.2in (HD)	2	12.00	0.288	14:50	10
		23	4.2in (HD)	2	12.00	0.288	15:02	12
		24	4.2in (HD)	2	12.00	0.288	15:14	12
		25	4.2in (HD)	2	12.00	0.288	15:24	10
		26	4.2in (HD)	2	12.00	0.288	15:35	11
		27	4.2in (HD)	2	12.00	0.288	15:45	10
		28	4.2in (HD)	2	12.00	0.288	15:55	10
		29	4.2in (HD)	2	12.00	0.288	16:05	10
		30	105mm (HD)	4	11.88	1.28	16:18	13
	C4bR1 Average:		---	---	12.00	0.33	---	11.57
			62.23 lbs/hr HD Agent					

Table 4-2: Summary of Tray Weights and Time Intervals (Continued)

Run	Port (Sampling Time)	Tray	Munition Type	Munitions per tray	HD Agent (lbs/tray)	Energetics (lbs/tray)	Entered DC (hr:min)	Interval (minutes)
C4bR4	Conditioning	1	4.2in (HT)	2	11.50	0.288	15:14	---
	Conditioning	2	4.2in (HT)	2	11.50	0.288	15:39	---
	Conditioning	3	4.2in (HT)	2	11.50	0.288	15:57	---
	Conditioning	4	4.2in (HT)	2	11.50	0.288	16:36	---
	Conditioning	5	4.2in (HT)	2	11.50	0.288	16:48	---
	Conditioning	6	4.2in (HT)	2	11.50	0.288	17:17	---
	Port 1	7	105mm (HD)	4	11.88	1.28	17:33	16
		8	105mm (HD)	4	11.88	1.28	17:45	12
		9	105mm (HD)	4	11.88	1.28	17:59	14
		10	105mm (HD)	4	11.88	1.28	18:15	16
		11	105mm (HD)	4	11.88	1.28	18:28	13
		12	105mm (HD)	4	11.88	1.28	18:42	14
		13	105mm (HD)	4	11.88	1.28	18:53	11
		14	105mm (HD)	4	11.88	1.28	19:04	11
		15	105mm (HD)	4	11.88	1.28	19:14	10
		16	105mm (HD)	4	11.88	1.28	19:24	10
	Conditioning	17	105mm (HD)	4	11.88	1.28	20:41	---
	Port 2	18	4.2in (HT)	2	11.50	0.288	20:55	14
		19	4.2in (HT)	2	11.50	0.288	21:06	11
		20	105mm (HD)	4	11.88	1.28	21:19	13
		21	105mm (HD)	4	11.88	1.28	21:33	14
		22	105mm (HD)	4	11.88	1.28	21:44	11
		23	105mm (HD)	4	11.88	1.28	21:57	13
		24	105mm (HD)	4	11.88	1.28	22:09	12
		25	105mm (HD)	4	11.88	1.28	22:21	12
		26	105mm (HD)	4	11.88	1.28	22:32	11
		27	105mm (HD)	4	11.88	1.28	22:45	13
	C4bR4 Average:		---	---	11.84	1.18	---	12.55
			56.62 lbs/hr HD Agent					

Table 4-2: Summary of Tray Weights and Time Intervals (Continued)

Run	Port (Sampling Time)	Tray	Munition Type	Mun/tray	HD Agent (lbs/tray)	Energetics (lbs/tray)	Entered DC (hr:min)	Interval (minutes)
C4bR5	Conditioning	1	4.2in (HT)	2	11.50	0.288	10:01	---
	Conditioning	2	4.2in (HT)	2	11.50	0.288	10:26	---
	Conditioning	3	4.2in (HT)	2	11.50	0.288	10:41	---
	Conditioning	4	4.2in (HT)	2	11.50	0.288	10:57	---
	Conditioning	5	105mm (HD)	4	11.88	1.28	11:40	---
	Port 1	6	105mm (HD)	4	11.88	1.28	11:52	12
		7	105mm (HD)	4	11.88	1.28	12:06	14
		8	105mm (HD)	4	11.88	1.28	12:22	16
		9	105mm (HD)	4	11.88	1.28	12:36	14
		10	105mm (HD)	4	11.88	1.28	12:50	14
		11	105mm (HD)	4	11.88	1.28	13:04	14
		12	105mm (HD)	4	11.88	1.28	13:17	13
		13	105mm (HD)	4	11.88	1.28	13:29	12
		14	105mm (HD)	4	11.88	1.28	13:42	13
		15	105mm (HD)	4	11.88	1.28	13:52	10
	Conditioning	16	105mm (HD)	4	11.88	1.28	15:44	---
	Port 2	17	105mm (HD)	4	11.88	1.28	16:00	16
		18	105mm (HD)	4	11.88	1.28	16:15	15
		19	105mm (HD)	4	11.88	1.28	16:29	14
		20	105mm (HD)	4	11.88	1.28	16:45	16
		21	105mm (HD)	4	11.88	1.28	16:58	13
		22	105mm (HD)	4	11.88	1.28	17:10	12
		23	105mm (HD)	4	11.88	1.28	17:26	16
		24	105mm (HD)	4	11.88	1.28	17:43	17
		25	105mm (HD)	4	11.88	1.28	17:57	14
	C4bR5 Average:		---	---	11.88	1.28	---	13.95
			51.11 lbs/hr HD Agent					

Table 4-3: Chloride/Metals Feed Rate Determination

	C3 Feed Rate			C4b Feed Rate			Maximum
Constituent	Spike (lb/hr)	½-Size Tray (lb/hr)	Total (lb/hr)	Agent/Energetic (lb/hr)	Full-Size Tray (lb/hr)	Total (lb/hr)	Feed Rate (lb/hr)
Chloride	4.00	---	4.00	25.2	---	**25.2**	25.2
Antimony	0.12	---	**0.12**	0.0015	---	0.0015	0.12
Arsenic	0.11	---	**0.11**	0.020	---	0.020	0.11
Barium	2.46	0.0000032	**2.46**	0.0026	0.0000075	0.0026	2.46
Beryllium	0.00085	---	**0.00085**	0.00031	---	0.00031	0.00085
Boron	0.075	---	**0.075**	0.0031	---	0.0031	0.075
Cadmium	0.0012	---	**0.0012**	0.00031	---	0.00031	0.0012
Chromium	0.95	0.0000077	**0.95**	0.019	0.000018	0.019	0.95
Cobalt	0.0087	---	**0.0087**	0.0013	---	0.0013	0.0087
Copper	0.090	0.000018	**0.090**	0.029	0.000044	0.029	0.090
Lead	3.59	0.0000013	**3.59**	1.53	0.0000031	1.53	3.59
Manganese	0.34	0.0000026	**0.34**	0.052	0.0000062	0.052	0.34
Mercury	0.014	---	**0.014**	0.0041	---	0.0041	0.014
Nickel	0.016	0.0000017	0.016	0.025	0.0000040	**0.025**	0.025
Phosphorus	0.49	---	**0.49**	0.18	---	0.18	0.49
Selenium	0.0016	---	**0.0016**	0.00063	---	0.00063	0.0016
Silver	0.0026	---	**0.0026**	0.00041	---	0.00041	0.0026
Thallium	0.00033	---	**0.00033**	0.000054	---	0.000054	0.00033
Tin	0.051	0.000044	**0.051**	0.017	0.00010	0.018	0.051
Vanadium	0.0010	---	**0.0010**	0.00031	---	0.00031	0.0010
Zinc	0.012	0.000028	0.012	0.069	0.000066	**0.069**	0.069

5.0 EXHAUST GAS SAMPLING

URS-Austin collected all exhaust gas samples during C4b with the exception of the DAAMS DRE samples that were collected by the onsite laboratory. The sampling locations were selected to yield representative samples for the stream being collected.

The exhaust blower duct sampling location was accessed through flanged ports in the duct between the exhaust blower and stack. The inner diameter of the exhaust blower duct was measured prior to testing and determined to be 12 inches at the sampling location. This sampling location was downstream of any online OGT equipment and evaluated prior to testing by M1 and M2 for representativeness. Figure 5-1 presents the traverse point locations for the exhaust blower duct. Eight (8) -point tests were conducted during each isokinetic test run. The M0030 and M0040 sampling trains were collected from the ports that were situated nearest to the stack, with each probe located at a single point within the duct. The TRM CEMS probe was located at the same port set used by the M0030 sampling train.

This section describes the procedures that were followed during the field sampling program. Throughout the overall program, US EPA-approved sampling protocols were utilized. The remainder of this section is divided into three (3) subsections: Field Program Description, Pre-Sampling Activities, and Sampling Methods.

5.1 FIELD PROGRAM DESCRIPTION

C4b consisted of five (5) test runs. C4bR2 was analyzed for all parameters but was not used to determine test averages as QP tubes were not installed during the run. C4bR3 was invalidated due to hich CO exceedances. Samples associated with C4bR3. The exhaust gas test methods that were utilized are as follows:

- M1: "*Sample Velocity Traverse for Stationary Sources*," 40 Code of Federal Regulations (CFR) Part 60, Appendix A;
- M2: *"Determination of Stack Gas Velocity and Volumetric Flow Rate (Type S Pitot Tube),"* 40 CFR Part 60, Appendix A;
- M3B: *"Gas Analysis for the Determination of Emission Rate Correction Factor or Excess Air,"* 40 CFR Part 60, Appendix A;
- M4: "*Determination of Moisture Content in Stack Gases*," 40 CFR Part 60, Appendix A;
- M6C: "*Determination of Sulfur Dioxide Emissions from Stationary Sources*," 40 CFR Part 60, Appendix A;
- M7E: "*Determination of Nitrogen Oxide Emissions from Stationary Sources*," 40 CFR Part 60, Appendix A;
- M10: "*Determination of Carbon Monoxide Emissions from Stationary Sources*," 40 CFR Part 60, Appendix A;

- M0010: *"Modified Method 5 Sampling Train,"* EPA 600/8-85-003;
- M0010-TOC: *"Guidance for Total Organics,"* EPA 600/R-96-033;
- M0023A: *"Determination of Polychlorinated Dibenzo-p-Dioxins and Polychlorinated Dibenzofurans from Stationary Sources,"* EPA 600/8-85-003;
- M0030: *"Volatile Organic Sampling Train and the Protocol for the Collection and Analysis of Volatile POHCs Using VOST,"* EPA 600/8-85-003;
- M0040: *"Sampling of Principal Organic Hazardous Constituents from Combustion Sources Using Tedlar Bags,"* EPA 600/8-85-003;
- M26A: *"Determination of Hydrogen Halide and Halogen Emissions from Stationary Sources,"* 40 CFR Part 60, Appendix A. [Particulates were determined from this train as well.]
- M29: "Determination of Metals Emissions from Stationary Sources," 40 CFR Part 60, Appendix A; and
- MM5E: *"Determination of Particulate Emissions from Stationary Sources,"* 40 CFR Part 60, Appendix A. [***NOTE:*** *This method was modified to determine energetic constituents. The modified method, Revision 1.05, was submitted to ADEM for review and was approved for use.]*

5.2 PRESAMPLING ACTIVITIES

Presampling activities included equipment calibration, sample media preparation, and precleaning of the sample train glassware. Each of these activities are described or referenced in the following subsections. Other presampling activities included team meetings and conferences, equipment packing, equipment setup, and finalization of all details leading up to the coordinated initiation of the sampling program.

5.2.1 Equipment Calibration

A program of positive actions was followed to prevent the failure of equipment or instruments during use. Maintenance and calibration were employed to ensure accurate measurements from the field and laboratory instruments.

Equipment scheduled for field use was cleaned and checked prior to calibration, as appropriate. General readiness of the equipment entailed a visual inspection of the meter boxes, sample hot boxes, probes, and umbilicals for dust, oil, or dirt in lines, and loose fittings and connections. An adequate supply of spare parts was taken to the field to minimize downtime due to equipment failure.

Equipment calibration was conducted IAW the procedures outlined in US EPA documents entitled "*Quality Assurance Handbook for Air Pollution Measurement Systems; Volume III - Stationary Source Specific Methods*" (EPA 600/4-77-0276). All required calibrations were

performed prior to the test program, with post-test calibrations performed as required. Documentation of pretest calibrations was kept in the project file during the field effort and copies provided to the regulatory observers prior to the start of the emissions tests. The calibration procedures for the equipment are summarized in Table 5-1. Copies of the equipment calibration forms for process control equipment, facility CEMS, and exhaust gas sampling equipment can be found in Appendix D.

5.2.2 Glassware Preparation

Prior to field use, sample train glassware was subjected to method-specific cleaning procedures in order to minimize sample contamination. Cleaning and storage procedures for sampling train glassware were IAW the procedures summarized in the Sampling and Analysis Plan (SAP)/Quality Assurance Project Plan (QAPP). Sample bottles were purchased pre-cleaned and sealed to specified US EPA protocols. Sample bottles were fitted with Teflon® cap liners.

5.2.3 Sample Media Preparation

Reagents used for the testing program were of sufficient grade or quality to meet or exceed method requirements. This included the use of spectro-grade solvents from the same lot, when possible, and the collection and analysis of the appropriate blanks. Deionized (DI) reagent water used in all organic sampling trains was of a grade and quality that was demonstrated to be "organic-free" as per SW-846 requirements.

Resin used in the M0010, M0010-TOC, M0023A, and MM5E sampling trains was prepared and certified clean by TestAmerica. The sorbent traps were loaded with resin at the laboratories with the openings packed with cleaned glass wool to ensure no resin would be lost. Field surrogates were added by the laboratory prior to shipping, as required. The M0030 traps were conditioned by the laboratory IAW procedures specified in M0030.

5.3 SAMPLING METHODS

On-site sampling activities included the equipment staging in the field, sampling operations, data logging (except where noted below), and sample recovery. Copies of field sampling data sheets can be found in Appendix C.

Each isokinetic test run had a total sample time of 240 minutes (two (2) ports at 120 minutes/port). The M0030 sampling train, which is non-isokinetic, was operated for a total of 160 minutes (40 minutes/set of traps). The non-isokinetic M0040 sampling train was operated to collect two (2) one (1)-hour bag samples. The M3B (non-isokinetic composite sample) was sampled by a separate pumping system operated in conjunction with an isokinetic sampling train.

5.3.1 US EPA Methods 1 and 2

Velocity traverses were conducted at the exhaust blower duct sampling location with an S-type pitot assembly IAW M1 and M2. An S-type pitot tube with an attached inclined manometer was used to measure the gas velocities. An attached Type-K thermocouple with remote digital display was used to determine the exhaust gas temperature.

Prior to commencing sampling, a preliminary determination of exhaust gas velocity and volumetric flow rate was performed to assist in selecting the correct nozzle diameter to ensure all isokinetic testing requirements were met. During the actual sampling, exhaust gas velocity, and volumetric flow rate measurements were conducted with each isokinetic sampling train. The required number of sampling traverse points for each sampling location was determined following M1. Pitot tubes were leak-checked before and after each test run.

Exhaust duct static pressure measurements, as required by M2, were recorded manually once per run. This static pressure reading was used to calculate stack gas volumetric flow rate for each isokinetic sampling train.

A cyclonic flow check was conducted at the sampling location prior to testing IAW Section 11.4 of M1. This procedure was used to ensure the flow was not "swirling" at the sampling location. The equipment used consisted of an S-type pitot tube connected to an inclined manometer to measure the duct's differential pressure, and an angle finding device (i.e., leveled angle finder for horizontal ports or delineated port plate for vertical ports). The pitot tube was positioned at each traverse point so that the face openings of the pitot tube were perpendicular to the exhaust duct cross-sectional plane. This position is called the zero reference. If the velocity pressure reading was zero, the cyclonic angle was recorded as 0º. If the velocity pressure reading was not zero, the pitot tube was rotated clockwise or counterclockwise until the velocity pressure reading became zero. This angle was then measured and reported to the nearest degree. After this technique was applied at each traverse point, the average of the absolute values of the cyclonic angles was calculated. This average was < 20º and the flow conditions in the source were deemed acceptable to test.

5.3.2 US EPA Method 3B

O_2 and CO_2 concentrations were determined during each test run using a bag sampling system IAW M3B. The exhaust gas was collected in an evacuated Tedlar bag. These samples were collected in conjunction with an isokinetic sampling train representing each traverse point within the exhaust duct. One (1) sample was collected for each run.

Analysis was conducted using an Orsat combustion gas analyzer. A sample from the Tedlar bag from each run was drawn into the analyzer and analyzed onsite for the concentrations of CO_2 and O_2 on a percentage basis. Analysis and calculation procedures were repeated until the individual dry molecular weights for any three (3) analyses differed from their mean by no more than 0.3 gram per gram-mole (g/g-mole) (0.3 pound per pound-mole (lb/lb-mole)). To determine the actual O_2 and CO_2 concentrations for each run, the resulting three (3) acceptable readings for each parameter were averaged. These average results were then used by all isokinetic sampling trains in the determination of the exhaust gas molecular weight. In addition, the O_2 concentrations were used for correcting emissions, as applicable, to 7% O_2.

5.3.3 US EPA Method 4

Prior to the test runs, during preliminary measurements, an initial exhaust gas moisture measurement was performed IAW M4. This method is applicable for the determination of the moisture content of stack gas. A gas sample was extracted at a constant rate from the duct, and the moisture removed from the gas stream by a series of chilled impingers. The amount of the

collected moisture was then determined gravimetrically and used in the calculation of percent moisture. M4 was used in conjunction with M0010, M0010-TOC, M0023A, M26A, M29, and MM5E for the determination of moisture at the sampling location. The weight gain for each sample train's impinger configuration was recorded and used in the exhaust gas moisture determination calculation.

5.3.4 US EPA Method 6C

SO_2 was determined during each test run using a TRM CEMS. Two (2) two-hour runs were completed for each run. This allowed for parsing of the data such that it would correspond with the actual times each port was sampled by the isokinetic sampling trains.

A logbook was kept and calibrations, quality assurance (QA)/quality control (QC) activities, routine maintenance, and repair activities were documented for the SO_2 testing. Activities related to the pre-test checks (calibration drift/error and response time tests) were also recorded. All data related to SO_2 sampling and the pre-test activities were logged using the Data Acquisition System (DAS).

The TRM CEMS was calibrated IAW M6C. In general, the QA/QC measures included the use of US EPA protocol calibration gases, pre- and post-test run calibrations, calibration error, and bias tests. Copies of the certifications for the gas standards, documentation of all TRM CEMS QA/QC procedures, and results summaries of the TRM CEMS QC are provided in Appendix D.

5.3.5 US EPA Method 7E

NO_x was determined during each test run using a TRM CEMS. Two (2) two-hour runs were completed for each run. This allowed for parsing of the data such that it would correspond with the actual times each port was sampled by the isokinetic sampling trains.

A logbook was kept and calibrations, QA/QC activities, routine maintenance, and repair activities were documented for the NO_x testing. Activities related to the pre-test checks (calibration drift/error and response time tests) were also recorded. All data related to NO_x sampling and the pre-test activities were logged using the DAS and/or the digital strip chart recorder.

The TRM CEMS was calibrated IAW M7E. In general, the QA/QC measures included the use of US EPA protocol calibration gases, a converter check, pre- and post-test run calibrations, calibration error, and bias tests. Copies of the certifications for the gas standards, documentation of all TRM CEMS QA/QC procedures, and results summaries of the TRM CEMS QC are provided in Appendix D.

5.3.6 US EPA Method 10

CO was determined during each test run using a TRM CEMS. Two (2) two-hour runs were completed for each run. This allowed for parsing of the data such that it would correspond with the actual times each port was sampled by the isokinetic sampling trains.

A logbook was kept and calibrations, QA/QC activities, routine maintenance, and repair activities were documented for the CO testing. Activities related to the pre-test checks (calibration drift/error and response time tests) were also recorded. All data related to CO sampling and the pre-test activities were logged using the DAS and/or the digital strip chart recorder.

The TRM CEMS was calibrated IAW M7E. In general, the QA/QC measures included the use of US EPA protocol calibration gases, pre- and post-test run calibrations, calibration error, and bias tests. Copies of the certifications for the gas standards, documentation of all TRM CEMS QA/QC procedures, and results summaries of the TRM CEMS QC are provided in Appendix D.

5.3.7 SW-846 Method 0010

A sampling train was used to measure and determine the emission rate of the semivolatile product of incomplete combustion (PICs) and tentatively identified compounds (TICs) IAW M0010. Table 5-2 summarizes the exhaust gas characteristics measured by the M0010 sampling train.

The sampling train consisted of a heated, glass-lined probe with a glass button-hook nozzle, and a heated Teflon® transfer line. A thermocouple and S-type pitot tube with an inclined manometer were attached to the probe for measurement of gas temperature and velocity. The sample gas passed through the probe to a heated, glass fiber filter. The probe and the filter holder were maintained at 248ºF plus or minus (±) 25ºF throughout each test period. Downstream of the heated filter, the gas passed through a heated Teflon® transfer line to a water-cooled condenser module, then through a sorbent module containing resin. The heated Teflon® transfer line was maintained at 248ºF ± 25ºF throughout each test period. The temperature of the exhaust gas entering the resin module was kept below 68ºF. The gas then passed through a series of ice-cooled impingers kept below 68ºF to enable condensation and collection of entrained moisture.

The first impinger, acting as a condensate reservoir (knockout) connected to the outlet of the resin module, was modified with a short stem IAW method requirements. The next two (2) impingers each contained 100-milliliter (mL) of DI water. The second DI water-filled impinger was equipped with a Greenburg-Smith impinger stem. The fourth impinger was empty, and the fifth impinger was loaded with indicating silica gel. All connections within the train were glass or Teflon®. No sealant greases were used. A dry gas meter, pump, and calibrated orifice meter followed the impingers. The M0010 sampling train configuration is depicted in Figure 5-2.

A M0010 sample was collected over a four (4)-hour sampling period for each test run. Sampling was isokinetic (90 to 110%) with readings of exhaust gas and necessary sampling parameters recorded six (6) times (6X) for each of the eight (8) sampling points.

Leak checks of the entire M0010 sampling train were performed prior to the start of sampling, during port changes, and at the completion of sampling. All leak checks and leakage rates were documented on the relevant field test data sheet. The acceptance standard for the M0010 sampling train was a leak rate of less than or equal to (≤) 0.02 cfm performed at the highest

vacuum reached during the period since the previous leak check. Pitot tubes were also successfully leak checked, both prior to and after sampling.

Following the completion of each test run (including final leak check), the M0010 sampling train was disassembled at the sampling location, partially recovered, and transported to a recovery trailer onsite. The sample recovery sequence is detailed on the field sampling log for the sampling train found in Appendix C. Each M0010 train resulted in the following sample fractions: front-half (probe, heated Teflon® transfer line, nozzle, front-half glassware) recovery rinse, filter, back-half (back-half filter holder and condenser) recovery rinse, resin module, condensate, and first impinger condensate and rinse.

5.3.8 SW-846 Method 0010 for TOCs

A sampling train was used to measure and determine the emission rate of the semi- and nonvolatile TOCs IAW M0010. Table 5-2 summarizes the exhaust gas characteristics measured by the M0010-TOC sampling train.

This train was run in conjunction with the M0040 which yielded the volatile portion for the TOC. The methods provide for the sampling and analysis of total organics from stack gas emissions, combining the organics from three (3) specific boiling point/vapor pressure ranges: light hydrocarbons and volatile organics, semivolatile organics, and nonvolatile organics. Two (2) sampling procedures and four (4) analytical techniques were combined to generate a value for total organics. The mass of organics that remain after correction for the identified organics, from SW-846 methodologies, is called residual organic carbon. This mass is used in estimating risk from unidentified organic emissions.

The sampling train consisted of a heated, glass-lined probe with a glass button-hook nozzle, and a heated Teflon® transfer line. A thermocouple and S-type pitot tube with an inclined manometer were attached to the probe for measurement of gas temperature and velocity. The sample gas passed through the probe to a heated, glass fiber filter. The probe and the filter holder were maintained at 248ºF ± 25ºF throughout each test period. Downstream of the heated filter, the gas passed through a heated Teflon® transfer line to a water-cooled condenser module, then through a sorbent module containing resin. The heated Teflon® transfer line was maintained at 248ºF ± 25ºF throughout each test period. The temperature of the exhaust gas entering the resin module was kept below 68ºF. The gas then passed through a series of ice-cooled impingers kept below 68ºF to enable condensation and collection of entrained moisture.

The first impinger, acting as a condensate reservoir (knockout) connected to the outlet of the resin module, was modified with a short stem IAW method requirements. The next two (2) impingers each contained 100-mL of DI water. The second DI water-filled impinger was equipped with a Greenburg-Smith impinger stem. The fourth impinger was empty, and the fifth impinger was loaded with indicating silica gel. All connections within the train were glass or Teflon®. No sealant greases were used. A dry gas meter, pump, and calibrated orifice meter followed the impingers. The M0010-TOC sampling train configuration is depicted in Figure 5-2 (the same train configuration as M0010).

A M0010-TOC sample was collected over a four (4)-hour sampling period during each emissions test. Sampling was isokinetic (90 to 110%) with readings of exhaust gas and necessary sampling parameters recorded 6X for each of the eight (8) sampling points.

Leak checks of the entire M0010-TOC sampling train were performed prior to the start of sampling, during port changes, and at the completion of sampling. All leak checks and leakage rates were documented on the relevant field test data sheet. The acceptance standard for the M0010-TOC sampling train was a leak rate of ≤ 0.02 cfm performed at the highest vacuum reached during the period since the previous leak check. Pitot tubes were also successfully leak checked, both prior to and after sampling.

Following the completion of each test run (including final leak check), the M0010-TOC sampling train was disassembled at the sampling location, partially recovered, and transported to a recovery trailer onsite. The sample recovery sequence is detailed on the field sampling log for the sampling train found in Appendix C. Each M0010-TOC train resulted in the following sample fractions: front-half (probe, heated Teflon® transfer line, nozzle, front-half glassware) recovery rinse, filter, resin module, condensate, and back-half rinse.

5.3.9 SW-846 Method 0023A

A sampling train was used to measure and determine the emission rate of the dioxins/furans IAW M0023A. Table 5-2 summarizes the exhaust gas characteristics for dioxins/furans measured by the M0023A sampling trains.

The sampling train consisted of a heated, glass-lined probe with a glass button-hook nozzle, and a heated Teflon® transfer line. A thermocouple and S-type pitot tube with an inclined manometer were attached to the probe for measurement of gas temperature and velocity. The sample gas passed through the probe to a heated, glass fiber filter. The probe and the filter holder were maintained at 248ºF ± 25ºF throughout each test period. Downstream of the heated filter, the gas passed through a heated Teflon® transfer line to a water-cooled condenser module, then through a sorbent module containing resin. The heated Teflon® transfer line was maintained at 248ºF ± 25ºF throughout each test period. The temperature of the exhaust gas entering the resin module was kept below 68ºF. The gas then passed through a series of ice-cooled impingers kept below 68ºF to enable condensation and collection of entrained moisture.

The first impinger, acting as a condensate reservoir (knockout) connected to the outlet of the resin module, was modified with a short stem IAW method requirements. The next two (2) impingers each contained 100-mL of DI water. The second DI water-filled impinger was equipped with a Greenburg-Smith impinger stem. The fourth impinger was empty, and the fifth impinger was loaded with indicating silica gel. All connections within the train were glass or Teflon®. No sealant greases were used. A dry gas meter, pump, and calibrated orifice meter followed the impingers. The M0023A sampling train configuration is depicted in Figure 5-2 (the same train configuration as M0010).

A M0023A sample was collected over a four (4)-hour sampling period during each emissions test. Sampling was isokinetic (90 to 110%) with readings of exhaust gas and necessary sampling parameters recorded 6X for each of the eight (8) sampling points.

Leak checks of the entire M0023A sampling train were performed prior to the start of sampling, during port changes, and at the completion of sampling. All leak checks and leakage rates were documented on the relevant field test data sheet. The acceptance standard for the M0023A sampling train was a leak rate of ≤ 0.02 cfm performed at the highest vacuum reached during the period since the previous leak check. Pitot tubes were also successfully leak checked, both prior to and after sampling.

Following the completion of each test run (including final leak check), the M0023A sampling train was disassembled at the sampling location, partially recovered, and transported to a recovery trailer onsite. The sample recovery sequence is detailed on the field sampling log for the sampling train found in Appendix C. Each M0023A train resulted in the following sample fractions: ffront-half (probe, heated Teflon® transfer line, nozzle, front-half glassware) recovery rinse, filter, back-half rinse, and resin module.

5.3.10 SW-846 Method 0030

The M0030 was used to determine emission rates of the volatile PICs and TICs in the exhaust gas. M0030 procedures and QA/QC requirements as described in M0030 were followed. The M0030 sampling system is a non-isokinetic sampling train, and sampling rates are predetermined based on desired run times.

Table 5-3 summarizes the exhaust gas characteristics measured by the M0030 sampling train. Approximately 20 liters (L) were collected through each set of traps at a sampling rate of approximately 0.5 liters per minute (L/min). Four (4) sets of traps were collected for each test run. The condensate was collected at the end of the run. A diagram of the sampling train is presented in Figure 5-3.

Handling precautions were followed to reduce the potential for contamination of the resin. Tenax resin is susceptible to contamination. The resin stock was thermally desorbed under helium and stored either sealed in the collection traps or under helium. A packed trap was desorbed to serve as a laboratory blank prior to placing the batch of Tenax traps in the field. The laboratory prepared sufficient sealed blank traps in sealed containers for the M0030 sampling. Four (4) pairs of traps and a condensate sample were collected during each test run. One (1) pair of field blanks were collected for each test run, and one (1) pair of trip blanks were provided for each shipping container containing M0030 samples being shipped to the laboratory. M0030 data is reported in Section 8, uncorrected for any field blank contamination.

5.3.11 SW-846 Method 0040

A M0040 sampling train was used to measure and determine the emission rates of volatile TOCs IAW M0040. Table 5-3 summarizes the exhaust gas characteristics measured by the M0040 sampling train.

The methods provide for the sampling and analysis of total organics from stack gas emissions, combining the organics from three (3) specific boiling point/vapor pressure ranges: light hydrocarbons and volatile organics, semi-volatile organics, and nonvolatile organics. Two (2) sampling procedures and four (4) analytical techniques were combined to generate a value for

total organics. The mass of organics that remain after correction for the identified organics, from SW-846 methodologies, is called residual organic carbon. This mass will be used in estimating risk from unidentified organic emissions.

The M0040 sampling train consisted of a glass-lined probe, a heated glass or Teflon® filter holder and quartz filter attached to one (1) of two (2) inlets of a glass and Teflon® three (3)-way isolation valve. The second valve inlet was connected to a charcoal trap to filter incoming air when releasing system pressure after leak checks. The outlet of the isolation valve was connected to a glass, water-cooled, coil-type condenser and a glass condensate trap for the removal and collection of condensable liquids present in the gas stream. A Teflon® transfer line connected the condensate trap to a second three (3)-way isolation valve and the isolation valve to a Tedlar bag contained in a rigid, air-tight container for sampling, storage and transport. The bag container was connected to a control console with a Teflon® vacuum line between the bag container and the control console to protect the console and sampling personnel from hazardous emissions in case of a bag rupture during sampling. The M0040 sampling train configuration is depicted in Figure 5-4.

Leak checks of the entire M0040 train were performed before and after each sampling run. In the event any portion of the train was disassembled and reassembled, leak checks were performed prior to disassembling the train and again upon reassembly. All leak checks and leakage rates were documented on the relevant field test data sheets.

Two (2) Tedlar bag gas samples were collected per run with approximately 40 L of sample collected into each Tedlar bag at a flow rate of approximately 0.65 L/min. A daily field blank was also collected. Each run produced the following samples: Tedlar bag sample 1, condensate sample 1, Tedlar bag sample 2, condensate sample 2, Tedlar bag field blank (only one (1) per day), and condensate field blank (only one (1) per day).

A field control spike was conducted using one (1) bag during one (1) of the sampling runs for each condition. The field control spikes consisted of a known concentration of a target compound (propane) injected directly into the Tedlar bag of a field sample.

5.3.12 US EPA Method 26A

A sampling train was used to measure and determine the emission rate of the acid gases IAW M26A. Table 5-2 summarizes the exhaust gas characteristics measured by the M26A sampling train.

The sampling train consisted of a heated, glass-lined probe with a glass button-hook nozzle, and a Teflon® transfer line. A thermocouple and S-type pitot tube with an inclined manometer were attached to the probe for measurement of gas temperature and velocity. The sample gas passed through the probe to a heated filter. The probe and the filter holder were maintained in the range of 248ºF to 273ºF throughout each test period with exceptions noted in Section 7. The gas then passed through a series of six (6) ice-cooled impingers kept below 68°F to enable condensation and collection of entrained moisture.

The first impinger served as a moisture knockout and contained 50 mL of 0.1 normal (N) sulfuric acid (H_2SO_4). The next two (2) impingers contained 100 mL of 0.1N H_2SO_4. The fourth and fifth impingers contained 100 mL of 0.1N sodium hydroxide (NaOH). The sixth impinger contained a pre-weighed amount of silica gel. The impingers were followed by a dry gas meter pump and calibrated orifice meter. The M26A sampling train configuration is depicted in Figure 5-5.

A M26A sample was collected over a four (4)-hour sampling period for each emissions test. Sampling was isokinetic (90 to 110%) with readings of exhaust gas and necessary sampling parameters recorded 6X for each of the eight (8) sampling points.

Leak checks of the entire M26A sampling train were performed prior to the start of sampling, during port changes, and at the completion of sampling. All leak checks and leakage rates were documented on the relevant field test data sheet. The acceptance standard for the M26A sampling train was a leak rate of ≤ 0.02 cfm performed at the highest vacuum reached during the period since the previous leak check. Pitot tubes were also successfully leak checked, both prior to and after sampling.

Following the completion of each test run (including the final leak check), the filter and filter housing was visually inspected to verify that there was no moisture present and that a purge with filtered air was not required. The sample recovery sequence is detailed on the field sampling log for the sampling train found in Appendix C. Each M26A train resulted in the following sample fractions: filter, front-half solvent rinse, 0.1N H_2SO_4 impinger catches, and 0.1N NaOH impinger catches.

5.3.13 US EPA Method 29

A sampling train was used to measure and determine the emission rate of the trace metals IAW M29. Table 5-2 summarizes the exhaust gas characteristics measured by the M29 sampling train.

The sampling train consisted of a heated glass-lined probe with a glass button-hook nozzle, and a Teflon® transfer line. A thermocouple and S-type pitot tube with an inclined manometer were attached to the probe for measurement of gas temperature and velocity. The sample gas passed through the probe to a heated filter. The probe and the filter holder were maintained at 248ºF ± 25ºF throughout each test period. Downstream of the heated filter, the gas passed through a series of seven (7) ice-cooled impingers kept below 68°F to enable condensation and collection of entrained moisture.

The first impinger was empty and served as a moisture knockout. The second and third impingers contained 100 mL of a 5% nitric acid (HNO_3)/10% hydrogen peroxide (H_2O_2) solution. The fourth impinger was empty. The fifth and sixth impingers contained 100 mL of a 4% potassium permanganate ($KMnO_4$)/10% H_2SO_4 solution. The seventh impinger contained a pre-weighed amount of silica gel. The impingers were followed by a dry gas meter, pump, and calibrated orifice meter. The M29 sampling train configuration is depicted in Figure 5-6.

A M29 sample was collected over a four (4)-hour sampling period for each emissions test. Sampling was isokinetic (90 to 110%) with readings of exhaust gas and necessary sampling parameters recorded 6X for each of the eight (8) sampling points.

Leak checks of the entire M29 sampling train were performed prior to the start of sampling, during port changes, and at the completion of sampling. All leak checks and leakage rates were documented on the relevant field test data sheet. The acceptance standard for the M29 sampling train was a leak rate of ≤ 0.02 cfm performed at the highest vacuum reached during the period since the previous leak check. Pitot tubes were also successfully leak checked, both prior to and after sampling.

Following the completion of each test run (including final leak check), the M29 sampling train was disassembled at the sampling location, partially recovered, and transported to a recovery trailer onsite. The sample recovery sequence is detailed on the field sampling log for the sampling train found in Appendix C. Each M29 train resulted in the following sample fractions: filter, probe nozzle and front-half filter housing 0.1N HNO_3 rinse, back-half filter housing and 0.1N HNO_3 impinger catch (impingers 1, 2, and 3), impinger 4 - 0.1N HNO_3 rinse (empty), impingers 5 and 6 - acidified $KMnO_4$ impinger catch, and impingers 5 and 6 hydrogen chloride (HCl) rinse.

5.3.14 US EPA Modified Method 5

A sampling train was used to measure and determine the emission rate of target energetic compounds IAW MM5E. Table 5-2 summarizes the exhaust gas characteristics measured by the MM5E sampling train.

The sampling train consisted of a heated, glass-lined probe with a glass button-hook nozzle and a heated sample line. A thermocouple and S-type pitot tube attached to an inclined manometer were attached to the probe for measurement of gas temperature and velocity measurement. The sample gas passed through the probe assembly to a heated filter. The probe, filter holder, and transfer line were maintained at 248ºF ± 25ºF throughout each test period. Downstream of the heated filter, the gas passed through a heated sample line and then through a series of three (3) ice-cooled impingers kept below 68ºF to enable condensation of entrained moisture. The first impinger had a short stem and was charged with 50 mL of DI water to serve as the primary condensate knockout. The second and third impingers were empty. After passing through the first three (3) impingers, the sample gas passed through a two (2) section sorbent module. Each section of the module contained approximately 10 grams (g) of resin separated by a glass wool plug. The gas then passed through a fourth ice-cooled impinger (empty) and finally through a fifth impinger containing a preweighed amount of silica gel. All connections within the train were glass or Teflon®. No sealant greases were used. The impingers were followed by a dry gas meter, pump, and calibrated orifice meter. The MM5E sampling train configuration is depicted in Figure 5-7.

A MM5E sample was collected over a four (4)-hour sampling period for each emissions test. Sampling was isokinetic (90 to 110%) with readings of exhaust gas and necessary sampling parameters recorded 6X for each of the eight (8) sampling points.

Leak checks of the entire MM5E sampling train were performed prior to the start of sampling, during port changes, and at the completion of sampling. All leak checks and leakage rates were documented on the relevant field test data sheet. The acceptance standard for the MM5E sampling train was a leak rate of ≤ 0.02 cfm performed at the highest vacuum reached during the period since the previous leak check. Pitot tubes were also successfully leak checked, both prior to and after sampling.

Following the completion of each test run (including final leak check), the MM5E sampling train was disassembled at the sampling location, partially recovered, and transported to a recovery trailer onsite. The sample recovery sequence is detailed on the field sampling log for the sampling train found in Appendix C. Each MM5E train resulted in the following sample fractions: front-half rinse and filter, impingers 1, 2, 3, and 4 condensate and rinsate, and resin module.

Figure 5-1: Traverse Point Locations for the SDC Exhaust Duct

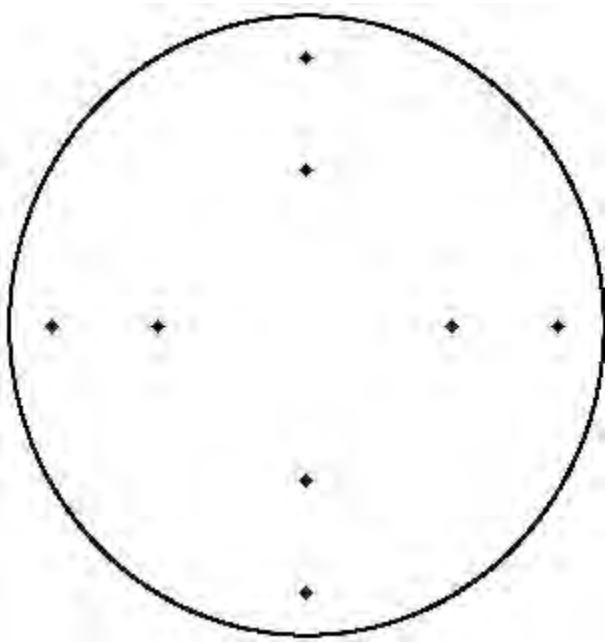

Traverse Point	Fraction of Diameter	Distance From Wall (inches)
1	6.7	0.804
2	25	3.0
3	75	9.0
4	93.3	11.2

Note: Traverse point locations are recorded on a field log sheet provided in Appendix C.

Figure 5-2: SW-846 Methods 0010 and 0023A Sampling Train

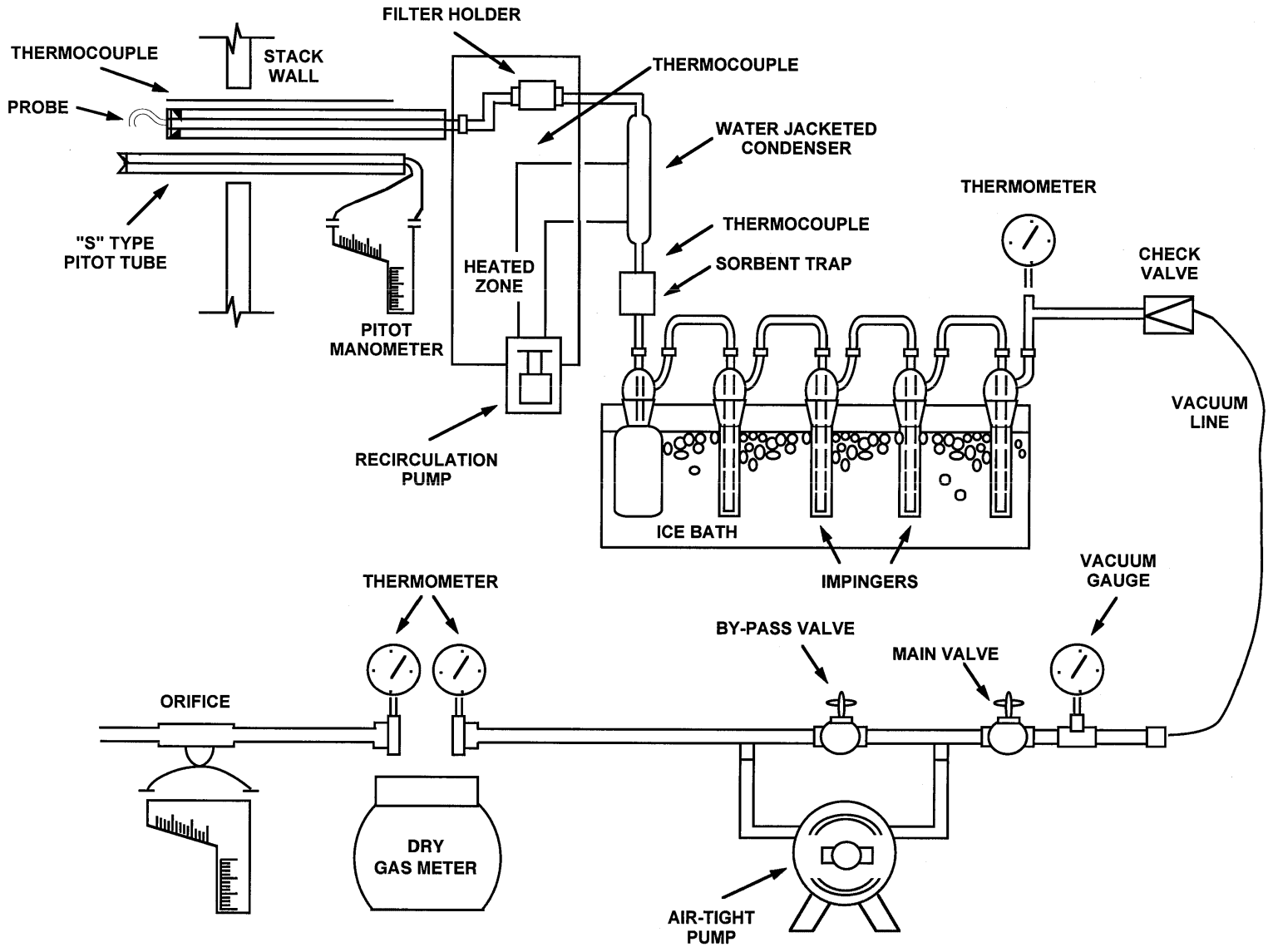

Figure 5-3: SW-846 Method 0030 Sampling Train

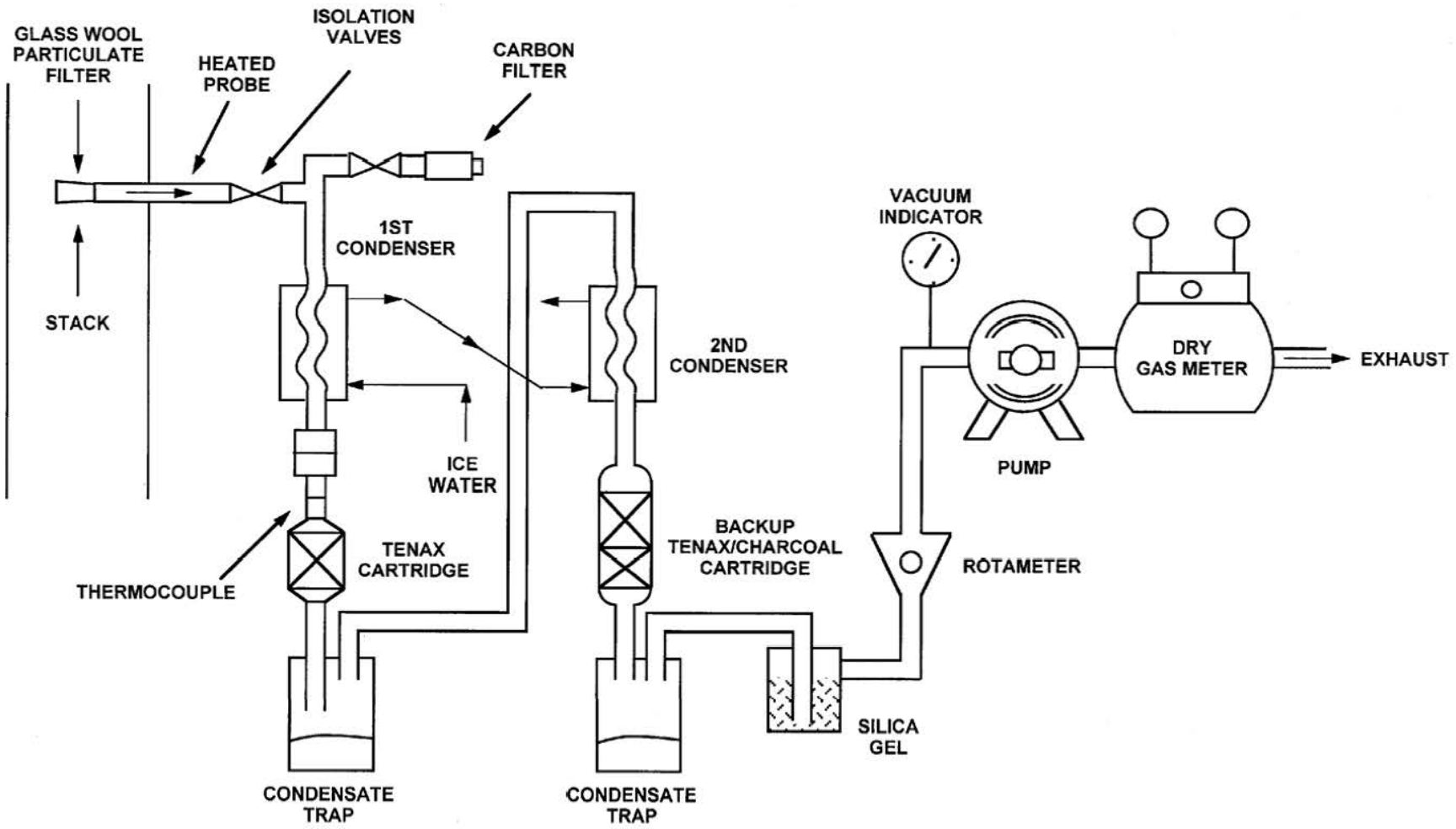

Figure 5-4: SW-846 Method 0040 Sampling Train

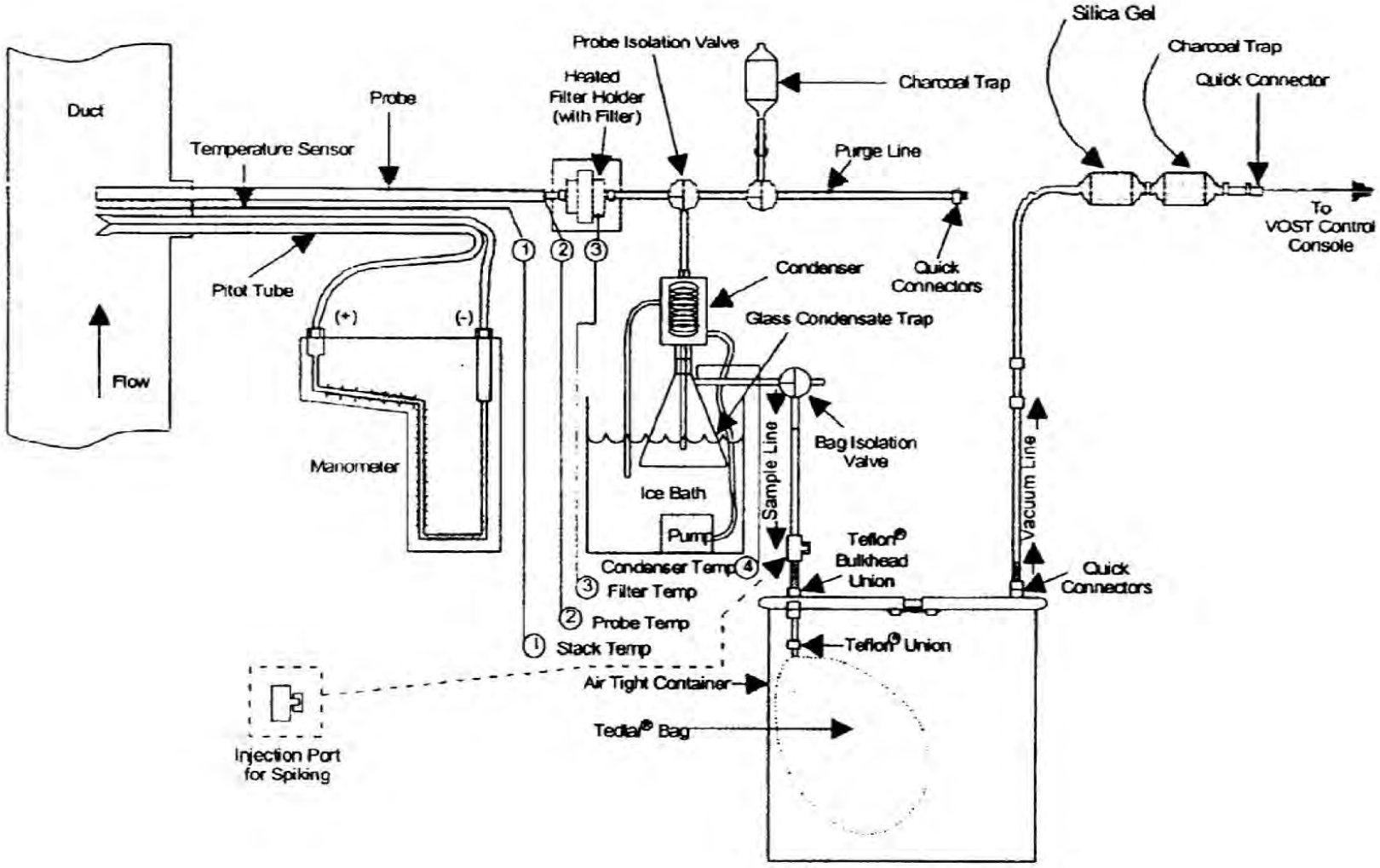

Figure 5-5: US EPA Method 26A Sampling Train

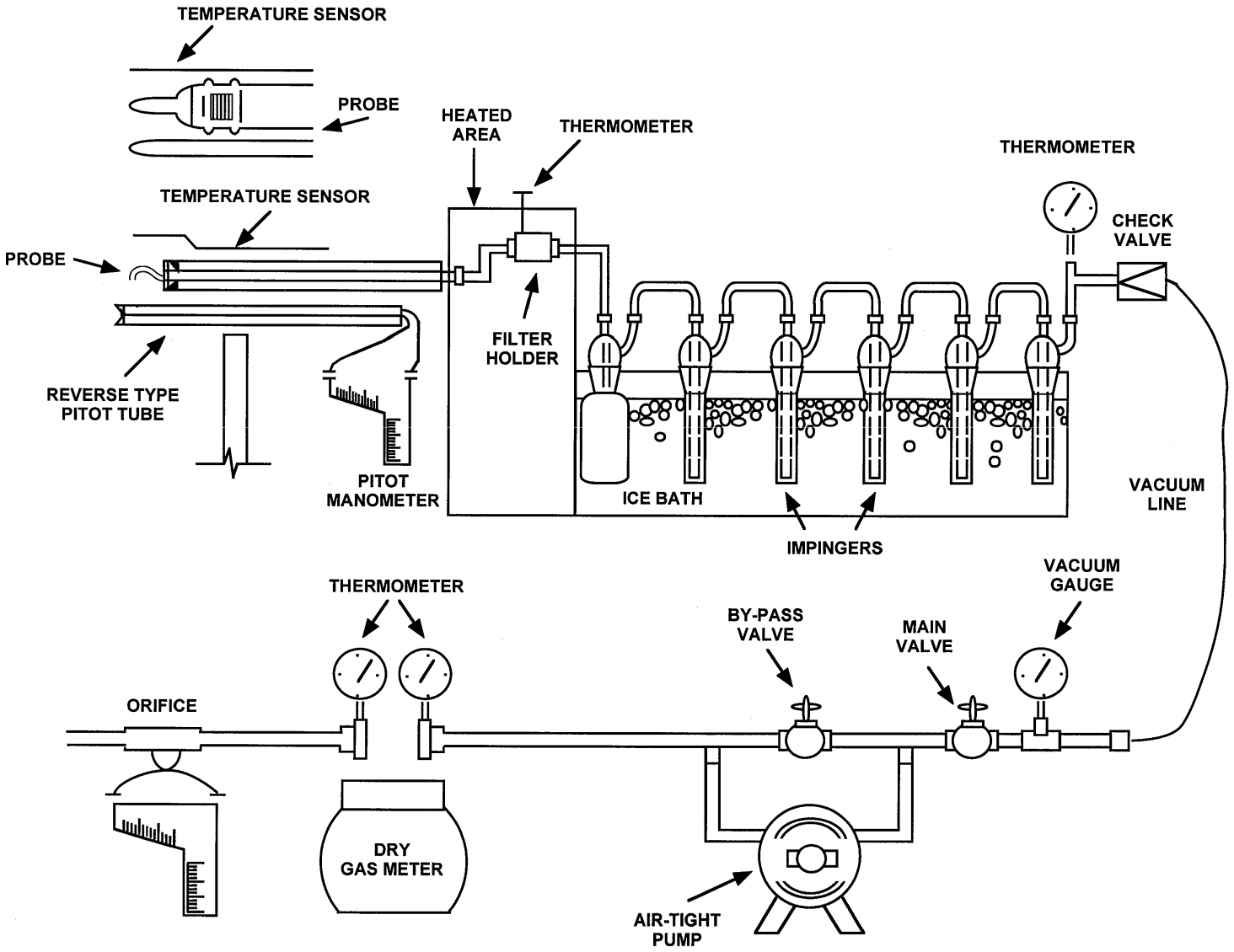

Figure 5-6: US EPA Method 29 Sampling Train

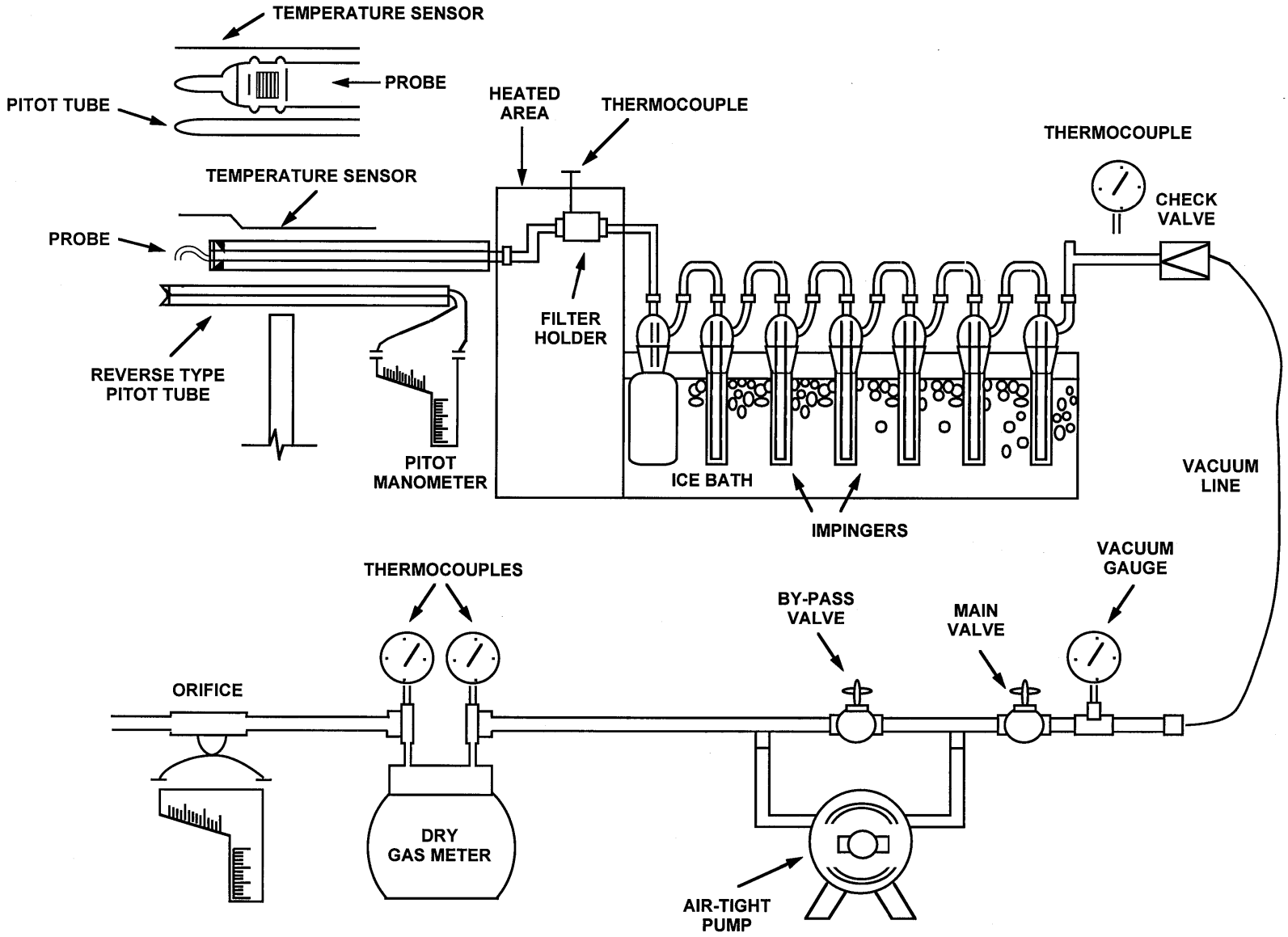

Figure 5-7: US EPA Modified Method 5 for Energetics Sampling Train

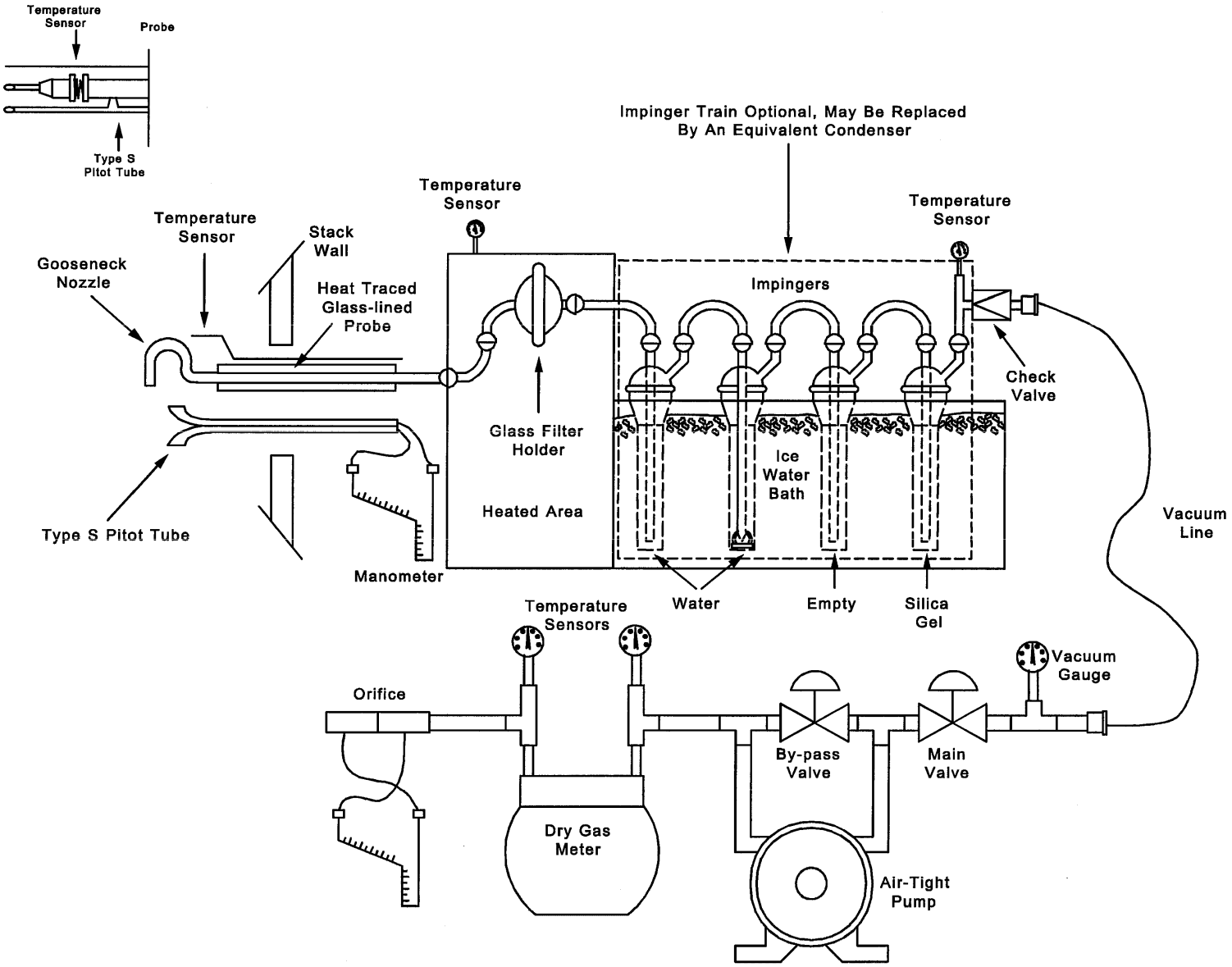

Table 5-1: Calibration Procedures for Equipment

Equipment	Reference	Procedure	Frequency
Probe Nozzles	QA Handbook, Volume III, Section 3.4.2, page 19	Measured three (3) internal diameters of the nozzle to 0.001 in and averaged Acceptance criteria: difference between high/low values ≤ 0.004 in	Every nozzle prior to use and post-test physical inspection
Pitot tubes	QA Handbook Volume III, Section 3.1.2, pages 1 to 13	Initial calibration in a wind tunnel Measured for appropriate spacing and dimensions when utilized in probe configuration Rejection criteria given on the calibration sheet	Post-test inspection for damage to the sensing heads Calibration verification performed using geometric configuration prior to subsequent test events
Thermocouples	QA Handbook, Volume III, Section 3.4.2, pages 12 to 18 and ALT Method 011	Verified against a mercury-in-glass thermometer at three (3) points including the anticipated measurement range Acceptance criteria: • impinger ± 2°F • dry gas meter ± 5.4°F • stack ± 1.5% of stack temperature	Initial calibration conducted using three (3) temperature points Calibration verification performed using a single temperature point prior to subsequent test events
Dry gas meters, Iso- and non-isokinetic sampling consoles	US EPA 40 CFR Part 60, Method 5, Section 10.3.1	Calibrated using a critical orifice set Acceptance criteria: • pre-test: Yi = Y ± 0.02 • post-test: Yi = Y ± 0.05	Pre-test and post-test
Field Top Loader Balance	QA Handbook, Volume III, Section 3.4.2, page 19	Calibrated with Standard Class-S weights within ± 1 g of stated value Corrective action: have manufacturer re-calibrate or adjust	Calibrated yearly by manufacturer Calibration verification performed using Class-S weights daily prior to using the balance
Probe Heating System	US EPA 40 CFR Part 60, Method 5, Section 10.4	Capable of maintaining 120°C ± 14°C (248°F ± 25°F)	Periodic checks of calibrated thermocouple readout during sampling
	M0030	Capable of maintaining >130°C	
	M0040	Capable of maintaining between 130 and 140°C	

Table 5-2: Isokinetic Sampling Train Summary

Parameter	Units	C4bR1	C4bR4	C4bR5	Average
SW-846 Method 0010					
Sample Volume	dscf	141.054	132.731	120.049	131.28
Exhaust Gas Flow Rate	dscfm	675	645	598	639.33
Exhaust Gas Temperature	°F	179.3	181.8	179.5	180.20
Exhaust Gas Moisture	%	35.61	37.01	35.39	36.00
Isokinetics	%	102.99	101.32	98.95	101.09
SW-846 Method 0010 for Total Organic Compounds					
Sample Volume	dscf	138.325	129.331	117.741	128.47
Exhaust Gas Flow Rate	dscfm	651	625	581	619.00
Exhaust Gas Temperature	°F	175.1	177.4	175.1	175.87
Exhaust Gas Moisture	%	36.00	37.02	35.33	36.12
Isokinetics	%	104.12	101.87	99.90	101.96
SW-846 Method 0023A					
Sample Volume	dscf	141.772	134.909	120.088	132.26
Exhaust Gas Flow Rate	dscfm	669	639	590	632.67
Exhaust Gas Temperature	°F	178.3	180.4	178.3	179.00
Exhaust Gas Moisture	%	35.78	37.32	35.44	36.18
Isokinetics	%	103.78	103.42	99.76	102.32
US EPA Method 26A					
Sample Volume	dscf	134.179	119.365	101.279	118.27
Exhaust Gas Flow Rate	dscfm	683	648	566	632.33
Exhaust Gas Temperature	°F	177.2	179.5	177.4	178.03
Exhaust Gas Moisture	%	35.64	37.15	35.28	36.02
Isokinetics	%	97.37	104.61	101.72	101.23
US EPA Method 29					
Sample Volume	dscf	144.070	128.103	115.777	129.32
Exhaust Gas Flow Rate	dscfm	682	621	573	625.33
Exhaust Gas Temperature	°F	179.6	182.0	180.2	180.60
Exhaust Gas Moisture	%	36.01	37.20	35.53	36.25
Isokinetics	%	104.72	102.22	100.04	102.33
US EPA Modified Method 5					
Sample Volume	dscf	139.675	131.284	117.713	129.56
Exhaust Gas Flow Rate	dscfm	680	647	594	640.33
Exhaust Gas Temperature	°F	178.3	180.6	178.8	179.23
Exhaust Gas Moisture	%	35.68	36.92	35.21	35.94
Isokinetics	%	102.39	101.09	98.82	100.77

Table 5-3: Non-Isokinetic Sampling Train Summary

Parameter	C4bR1			C4bR4			C4bR5		
Barometric Pressure (inHg)	29.04			29.13			29.19		
M0030 Meter Calibration Factor	1.033			1.033			1.033		
M0030 Collection Time (hours)	Tube A: 1110-1150 hrs			Tube A: 1735-1815 hrs			Tube A: 1155-1235 hrs		
	Tube B: 1156-1236 hrs			Tube B: 1823-1903 hrs			Tube B: 1243-1323 hrs		
	Tube C: 1421-1501 hrs			Tube C: 2055-2135 hrs			Tube C: 1600-1640 hrs		
	Tube D: 1508-1548 hrs			Tube D: 2143-2223 hrs			Tube D: 1647-1727 hrs		
Tube Pairs	**Sample Volume (L, dry)**	**Temp. (°F)**	**Corrected Volume (dsL)**	**Sample Volume (L, dry)**	**Temp. (°F)**	**Corrected Volume (dsL)**	**Sample Volume (L, dry)**	**Temp. (°F)**	**Corrected Volume (dsL)**
Tube A	20.86	90.75	20.05	20.87	94.13	20.00	20.33	97.63	19.40
Tube B	20.07	95.63	19.12	20.29	95.75	19.39	20.33	100.63	19.29
Tube C	20.56	95.88	19.58	19.97	87.75	19.36	21.60	97.50	20.61
Tube D	20.66	96.38	19.66	20.65	91.13	19.89	20.14	99.75	19.14
Totals	---	---	78.41	---	---	78.64	---	---	78.45
Barometric Pressure (inHg)	29.04			29.13			29.19		
Average Delta H (inwc)	1.20			1.20			1.20		
M0040 Meter Calibration Factor	1.013			1.013			1.013		
M0040 Collection Time (hours)	Bag A: 1115-1215 hrs			Bag A: 1745-1845 hrs			Bag A: 1155-1255 hrs		
	Bag B: 1440-1540 hrs			Bag B: 2154-2254 hrs			Bag B: 1614-1714 hrs		
	Field Blank: 1300-1400 hrs			Field Blank: 1948-2048 hrs			Field Blank: 1400-1500 hrs		
Tube Pairs	**Sample Volume (L, dry)**	**Temp. (°F)**	**Corrected Volume (dsL)**	**Sample Volume (L, dry)**	**Temp. (°F)**	**Corrected Volume (dsL)**	**Sample Volume (L, dry)**	**Temp. (°F)**	**Corrected Volume (dsL)**
Bag A	30.91	92.71	29.12	30.48	93.83	28.75	30.55	97.67	28.67
Bag B	30.64	103.50	28.31	30.60	90.25	29.05	30.73	97.13	28.87
Field Blank	28.37	104.17	26.18	31.04	91.58	29.39	31.19	99.96	29.15

6.0 ANALYTICAL PROCEDURES

The analytical program that was performed in support of C4b of the SDC Emissions Test consisted of the analysis of exhaust gas samples. The program used US EPA analytical methods, project-specific procedures, and laboratory-specific procedures as specified in the SAP/QAPP. A complete copy of all the analytical laboratory deliverables is located in Appendix F.

6.1 SUMMARY OF ON-SITE ANALYTICAL PROCEDURES

6.1.1 O_2 and CO_2

M3B sampling was performed to determine O_2 and CO_2 concentrations by collecting an integrated bag sample that was analyzed using an Orsat analyzer. One (1) integrated bag sample was collected during each run in conjunction with an isokinetic sampling train. Each sample was analyzed and the resulting O_2 and CO_2 values were used for all sampling trains. Each sample was collected at a constant rate resulting in a total sample volume. All Tedlar bags were leak checked prior to use.

The Orsat analyzer was successfully leak-checked prior to analysis of each sample IAW the procedures in M3B. The Orsat accuracy was checked with ambient air on a daily basis and with cylinder audits once during each condition. Two cylinders, each containing different CO_2 and O_2 concentrations were used to conduct each audit. Results of the cylinder audits are recorded on the field data sheets provided in Appendix C.

6.1.2 SO_2

SO_2 concentration was determined during each test run using a TRM CEMS operated IAW M6C. The quality of data generated by this TRM CEMS was evaluated by conducting system performance checks before testing began, by conducting calibration checks during each test run, and reviewing all data records obtained during the initial instrument performance evaluation.

During each test run, the zero and span checks of the monitors were considered verification of the quality of data received. Data was reported on one (1)-minute intervals and was archived in the TRM CEMS data acquisition system. The calibration gas used to calibrate the instrument conformed to the US EPA *Traceability Protocol for Assay and Certification of Gaseous Calibration Standards* (RTI/6960/208-01F).

6.1.3 NO_x

NO_x concentration was determined during each test run using a TRM CEMS operated IAW M7E. The quality of data generated by this TRM CEMS was evaluated by conducting system performance checks before testing began (i.e., stratification check, interference check, and NO_2 to NO conversion efficiency), by conducting calibration checks during each test run, and reviewing all data records obtained during the initial instrument performance evaluation.

During each test run, the zero and span checks of the monitors were considered verification of the quality of data received. Data was reported on one (1)-minute intervals and was archived in the TRM CEMS data acquisition system. The calibration gas used to calibrate the instrument

conformed to the US EPA *Traceability Protocol for Assay and Certification of Gaseous Calibration Standards* (RTI/6960/208-01F).

6.1.4 CO

CO concentration was determined during each test run using a TRM CEMS operated IAW M10. The quality of data generated by this TRM CEMS was evaluated by conducting system performance checks before testing began, by conducting calibration checks during each test run, and reviewing all data records obtained during the initial instrument performance evaluation.

During each test run, the zero and span checks of the monitors were considered verification of the quality of data received. Data was reported on one (1)-minute intervals and was archived in the TRM CEMS data acquisition system. The calibration gas used to calibrate the instrument conformed to the US EPA *Traceability Protocol for Assay and Certification of Gaseous Calibration Standards* (RTI/6960/208-01F).

6.1.5 Volatile TOCs

TOC sampling and analysis was accomplished by following the procedures identified and referenced in "*Guidance for Total Organics, Final Report*" (EPA/600/R-96/033). Two (2) separate sampling trains were employed to collect the samples necessary to make the TOC determination. A M0040 sampling train was used to collect exhaust gas samples for the determination of total volatile unspeciated organics and a M0010 sampling train was used to collect exhaust gas samples for total unspeciated semivolatile and non-volatile organics.

For the volatile TOCs, two (2) bag samples per run were collected and analyzed on-site for C_1-C_7 compounds via GC/FID. The condensate collected ahead of the Tedlar bag during each run was analyzed for C_4-C_7 compounds off-site, as were the samples collected with the M0010-TOC.

The exhaust gas samples collected into the Tedlar bags were analyzed in the field by gas chromatograph (GC)/flame ionizing detector (FID). The GC was set up in the field with column and conditions appropriate for the analysis of C_1 through C_7 n-alkanes. Retention times were determined and a calibration was performed with certified gas standards of C_1 through C_7 alkanes in air or nitrogen. Compounds of interest were identified by retention times or retention time ranges and quantitative analysis was performed. Results of the Tedlar bag analyses were added to the volatile organics from the condensate to yield the volatile organics portion of the TOC number.

6.1.6 Mustard Agent in Exhaust Gas

Exhaust gas samples were collected on DAAMS and analyzed IAW ANCDF Laboratory Operating Procedures (LOPs) to determine the exhaust gas concentration of mustard for use in determining DRE. This analysis was conducted by collecting exhaust gas samples IAW AN-LOP-200. This procedure provides for non-isokinetic sampling with a 240 minute sampling time. Each sample was then analyzed by GC-flame photometric detector (FPD) IAW AN-LOP-120 and by mass spectrometer detector (MSD) IAW AN-LOP-130, if applicable.

AN-LOP-120 and -130 are GC-FPD and MSD site-specific procedures where a DAAMS tube sample is desorbed to introduce the sample into a GC. The GC is equipped with a fused-silica capillary column. The GC oven is temperature-programmed to allow separation of the target analyte, which is then detected by a FPD that is interfaced to the GC. GC-FPD quantitation is accomplished using the FPD analyte response and a pre-established calibration curve.

6.2 SUMMARY OF OFF-SITE ANALYTICAL PROCEDURES

With the exception of agent, Orsat, and M0040 (bag samples), all exhaust gas samples were analyzed by off-site laboratories. The analytical methods employed for exhaust gas samples are listed below.

Parameter	Analysis Method
Semivolatile Organics	SW-846 Method 8270C (M8270C)
Dioxins/Furans	SW-846 Methods 8290 (M8290)
Volatile Organics	SW-846 Method 8260B (M8260B)
Total Volatile, Semivolatile, and Nonvolatile Unspeciated Organics	"*Guidance for Total Organics*" EPA/600/R-96/033
Acid Gases	M26A
Particulates	US EPA Method 5 (M5)
Metals	SW-846 Methods 6020 (M6020), 7470A (M7470A), and 7471A (M7471A)
Energetics	SW-846 Method 8330 (M8330)

6.2.1 Semivolatile Organics

Sampling for semivolatile organics was accomplished by M0010. Preparation of the sampling train was performed IAW SW-846 Method 3542 (M3542). Analysis of the three analytical fractions of the M0010 sampling train was performed IAW M8270C by GC/MS.

Sample fractions were prepared for analysis IAW M3542. This method provides procedures by which the samples generated by the M0010 sampling train are separated and solvent extracted IAW SW-846 Method 3540C (M3540C) (filter and XAD/back-half rinse fractions) and SW-846 Method 3510C (M3510C) (front-half rinse and condensate/condensate rinse fractions) with method exceptions as noted in M3542. Extracts are concentrated to final volume IAW M3540C. In total, the sample fractions recovered from the M0010 sampling train prepared for analysis by M3542 yielded three (3) extracts for analysis by M8270C.

M8270C is a GC/mass spectrometer (MS) method where samples that have been prepared for analysis using one (1) or more of the aforementioned sample preparation procedures are introduced into a GC by injecting an aliquot of the concentrated sample extract. The GC is equipped with a fused-silica capillary column. The GC oven is temperature-programmed to allow separation of the analytes, which are then detected by a MS interfaced to the GC. Analytes eluted from the capillary column are introduced into the MS whereby identification of target analytes is accomplished by comparing their mass spectra with the electron impact spectra of authentic standards. Quantitation is accomplished by comparing the response of a major (quantitation) ion relative to an internal standard using a multi-point calibration curve.

6.2.2 Dioxins/Furans

Sampling for dioxins/furans was accomplished by M0023A. Samples were extracted and concentrated as described in the method. Analysis of the sample extracts was performed by high resolution gas chromatograph (HRGC)/high resolution mass spectrometer (HRMS) IAW M8290.

Samples were solvent extracted IAW the matrix-specific technique described in M8290 after the addition of internal standards and surrogates, as required (surrogate standards are added to the sorbent/back-half prior to sampling). Sample extracts are solvent exchanged and concentrated using a nitrogen evaporative concentrator to reduce the volume of the extract. After the concentrated samples are subject to a clean-up step, fractionated, and subject to additional clean-up steps, they are ready for analysis by M8290.

M8290 employs a HRGC column coupled to a HRMS. An aliquot of each concentrated sample extract is injected into the HRGC/HRMS system. The system is capable of performing selected ion monitoring at resolving powers of at least 10,000 (10% valley definition). Identification of the target analytes for which a C_{13}-labeled standard is available in the sample fortification and recovery standard solutions (added prior to sample analysis) is based on their elution at their exact retention time (-1 to +3 seconds from the respective internal or recovery standard signal) and simultaneous detection of the two most abundant ions in the molecular ion region. All other target analytes are identified when their relative retention times fall within their respective dioxins/furans retention time windows, as established using a column performance evaluation solution, and the simultaneous detection of the two (2) most abundant ions in the molecular ion region. The identification of octachlorodibenzofuran is based on its retention time relative to $^{13}C_{12}$- octachlorodibenzo-p-dioxin (CDD) and the simultaneous detection of the two most abundant ions in the molecular ion region. Confirmation is based on a comparison of the ratio of the integrated ion abundance of the molecular ion species to their theoretical abundance ratio. Quantitation of the individual congeners, total dioxins, and total furans is achieved in conjunction with the establishment of a multi-point calibration curve for each homologue, during which each calibration solution is analyzed once.

6.2.3 Volatile Organics

Sampling for selected volatile organics was accomplished by M0030. Analysis of the M0030 samples was performed IAW SW-846 Methods 5041A (M5041A) and M8260B. The sample fraction analyzed included the Tenax tubes, the Tenax/charcoal tubes, and the condensate from each run.

M5041A is a method in which the sorbent tubes are thermally desorbed by heating and purging with organic-free helium. The gaseous effluent from the tubes is bubbled through pre-purged organic-free reagent water and trapped on an analytical sorbent trap in a purge-and-trap unit. For condensate samples, a sample aliquot is placed directly into the purging chamber of the purge-and-trap unit where volatile organic constituents are purged onto the analytical sorbent trap. After desorption, the analytical sorbent trap is heated rapidly and the gas flow from the analytical trap is directed to the head of a fused-silica capillary column. The volatile organic compounds desorbed from the analytical trap are determined by M8260B.

M8260B is a GC/MS method where volatile compounds are introduced into a GC using appropriate purge-and-trap methods. The GC is equipped with a fused-silica capillary column. The GC oven is temperature-programmed to allow separation of the analytes, which are then detected by a MS interfaced to the GC. Analytes eluted from the capillary column are introduced into the MS whereby identification of target analytes is accomplished by comparing their mass spectra with the electron impact spectra of authentic standards. Quantitation is accomplished by comparing the response of a major (quantitation) ion relative to an internal standard using a multi-point calibration curve.

6.2.4 Total Volatile, Semivolatile, and Nonvolatile Organics

TOC sampling and analysis was accomplished by following the procedures identified and referenced in "*Guidance for Total Organics, Final Report*" (EPA/600/R-96/033). Two separate sampling trains were employed to collect the samples necessary to make the TOC determination. A M0040 sampling train was used to collect samples for the determination of the volatile fraction of the TOC and a M0010 sampling train was used to collect exhaust gas samples for the determination of the semivolatile and nonvolatile fractions of the TOC.

For the volatile fraction of the TOC, two (2) bag samples per run were collected and analyzed on-site for C_1 through C_7 compounds via field GC/FID as described in Section 6.1.2. The condensate collected ahead of the Tedlar bag during each run was analyzed for C_4 through C_7 compounds by an off-site laboratory IAW the method described in "*Guidance for Total Organics, Final Report*" (EPA/600/R-96/033). This is GC/FID method where samples are purged onto a sorbent trap and the sorbent trap is then desorbed into a GC. The GC is equipped with a fused-silica capillary column. The GC oven is temperature-programmed to allow separation of the analytes, which are then detected by a FID. Uniform FID response for varying compound classes is assumed in this methodology. Compounds found with retention times prior to the C_4 retention time are quantified with an appropriate response factor and reported as C_4 with the other results quantitated against a multi-point calibration curve prepared using C_5 through C_7 standards. Results of the condensate are added to the field determined volatile organics values to yield the total volatile fraction of the TOC.

For the total semivolatile and nonvolatile fractions of the TOC, samples are prepared IAW M0010, Appendix B. Specifically, two standards were added to each sample prior to extraction to bracket the quantitation range. One (1) of the standards serves as a surrogate to provide an additional QC measure for the analysis. The three extracts from the total sampling train are combined prior to analysis, and the combined extract is split to allow separate analysis.

The total chromatographable organic (TCO) method is a capillary GC/FID method quantifying chromatographable material in the 100 to 300 degrees Celsius (°C) boiling point range. An aliquot of the prepared extract is injected onto a capillary GC column with a FID detector, and the peak areas are summed over the retention time window that encompasses the TCO boiling point range. The TCO value is determined from the multipoint calibration curve, generated with hydrocarbon standards that fall within the TCO range, specifically decane, dodecane, and tetradecane. The organics identified in the prescribed boiling point range are quantified and summed (totaled) to obtain the TCO portion of the TOC.

The gravimetric (GRAV) method quantifies nonvolatile organic material with a boiling point greater than 300°C. A carefully measured aliquot of the prepared extract is placed in a pre-cleaned weighing pan and allowed to dry in air at room temperature, then come to complete dryness in a room temperature desiccator, while exposure to dust and contaminants are minimized. The residue in the pan is weighed and the mass is recorded to determine the GRAV value.

The TOC value is reported as the sum of the volatile, semivolatile, and nonvolatile unspeciated organics results.

6.2.5 Acid Gases

Acid gas sampling and analysis were accomplished by following the procedures in M26A. A small volume of each M26A sample is injected into an ion chromatograph (IC) to flush and fill a constant volume sample loop. The sample is then injected into a stream of carbonate-bicarbonate eluent of the same strength as the impinger solutions. The sample is pumped through three different ion exchange columns and into a conductivity detector. The first two columns, a precolumn or guard column and a separator column, are packed with low-capacity, strongly basic anion exchanger. Ions are separated into discrete bands based on their affinity for the exchange sites of the resin. The last column is a suppressor column that reduces the background conductivity of the eluent to a low or negligible level and converts the anions in the sample to their corresponding acids. The separated anions in their acid form are measured using an electrical-conductivity cell. Anions are identified based on their retention times compared to known standards. Quantitation is accomplished by measuring the peak height or area and comparing it to a calibration curve generated from known standards.

6.2.6 Particulates

Particulates analyses were accomplished following the procedures in M5. The sampling for particulate emissions was done with the M26A isokinetic sampling train. Particulate determination was performed during all runs.

Prior to use in the field, each filter used was desiccated to a constant weight, placed in glass petri dishes, and sealed with Teflon® tape. An identification label was placed on each dish, and the weight of each filter was recorded. The beakers used for the dry-down of the acetone rinse were cleaned and dried in a drying oven. The beakers were desiccated to a constant weight.

Analysis of the particulate samples was accomplished by: drying the front-half acetone rinses in a tared beaker, desiccating, and weighing to a constant weight. The filters were desiccated and weighed to a constant weight. The net weight for the front-half acetone rinse and filter was determined by calculating the difference in weight. The sum of the net weights for the probe wash and filter catch was used to calculate the particulate concentrations in the exhaust gas.

6.2.7 Metals

Metals sampling and preparation of the sampling trains for analysis were accomplished by following the procedures in M29. The M29 sample preparation procedures employ acid

digestion using acid/reagent combinations specified in the method for each sample fraction collected from the sampling train.

Analysis of the prepared and combined sample fractions, as specified by M29, was conducted by cold vapor atomic absorption spectroscopy (CVAAS) for mercury, M7470A/M7471A, and by inductively coupled plasma (ICP)/MS, M6020, for the remaining metals.

In the CVAAS technique used for mercury analysis (M7470A/M7471A), analysis is based on the absorption of radiation at 253.7-nanometer by mercury vapor. The mercury is reduced to the elemental state and aerated from solution in a closed system. The mercury vapor passes through a cell positioned in the light path of an atomic absorption spectrophotometer. Absorbance is measured as a function of mercury concentration.

M6020, used to analyze M29 samples for all target metal concentrations except mercury, is a multi-element procedure that uses ICP/MS. The method measures ions produced by a radio frequency ICP. Analyte species originating in the liquid sample digestate are nebulized and the resulting aerosol transported by argon gas into the plasma torch of the instrument. The ions produced are entrained in the plasma gas and introduced, by means of an interface, into a MS. The ions produced in the plasma are sorted according to their mass-to-charge ratios and quantified with a channel electron multiplier. Interferences are assessed by the analytical system and valid corrections are applied. Interference correction includes compensation for background ions contributed by the plasma gas, reagents, and constituents of the sample matrix.

6.2.8 Energetics

Sampling of energetic compounds was accomplished using a modified M5 sampling train. Each sampling train yielded three fractions for preparation and four fractions for analysis: the front-half rinse and filter, the condensate and impinger rinsate, and the two-section resin module. The front-half rinse and filter fraction was prepared for analysis by decanting the solvent phase. The condensate and condensate rinse fraction was prepared for analysis IAW SW-846 Method 3535 (M3535). Each resin section was prepared for analysis by serial extraction with acetonitrile. Analysis of the analytical fractions of the modified M5 train was done IAW M8330 (modified) by HPLC with ultra-violet detection. The second resin section results are only included in train totals when analytes are detected in the first resin section analysis IAW the approved energetics procedure.

7.0 QA/QC RESULTS

QA/QC measures for this program were based on the methods employed and the specific measures outlined in the ANCDF SDC Emissions Test Plan (see Appendix B). Results of the QA/QC activities employed during the testing program are summarized in this section. All calculations were performed using standardized equations.

Field data was reduced using a personal computer with software containing validated equations. Isokinetic ratios were determined after each test run. Reduced data shown in Appendix C-3 were generated after each test run with the exception of pollutant concentrations and emission rates, which were determined after sample analyses were completed. All sampling trains were leak checked prior to, and immediately after, sampling in each port.

Exhaust gas samples were collected by URS-Austin. Sample collection, documentation, and management procedures were performed IAW the SAP/QAPP. Table 7-1 provides a summary of laboratory and field samples collected and analyzed in support of the emissions tests.

7.1 LABORATORY QUALIFICATIONS AND ANALYTICAL STANDARDS

The off-site analytical laboratories used to perform sample analysis were TestAmerica in Knoxville, Tennessee, and TestAmerica in Sacramento, California. Both laboratories have extensive experience in these methods and have conducted emissions testing at ANCDF and other chemical demilitarization facilities.

7.1.1 Data Validation

Analytical data were initially verified by the subcontractor laboratory QC and/or supervisory personnel and then subjected to validation by ANCDF-designated personnel. The field and laboratory blanks, replicate samples, and internal QC sample results were used to assess the analytical results. Designated personnel reviewed subcontractor laboratory raw analytical data to verify the calculated results. The criteria used to evaluate the analytical data includes use of approved analytical procedures, use of properly operating and calibrated instrumentation, and acceptable results from analyses of QC samples.

7.1.2 Data Reporting

All data were reported in standard units depending on the measurement and the ultimate use of the data.

7.2 FIELD QC SUMMARY

7.2.1 Calibration Procedures

Prior to the field sampling effort, the field sampling equipment was calibrated. Copies of the calibration documentation were on-site during the emissions test and are included in Appendix D. Calibrations were performed as described in the US EPA publications "*Quality Assurance Handbook for Air Pollution Measurement Systems; Volume III - Stationary Source*

Specific Methods," (EPA-600/4-77-027b) and US EPA 40 CFR Part 60, Appendix A. Field sampling equipment that required calibration included the sample metering system, nozzles, thermocouples, pitot tubes, and the barometer. Calibration documentation for process control equipment and facility CEMS are also included in Appendix D.

7.2.2 Equipment Leak Checks

Prior to sampling, each isokinetic sampling train was leak checked IAW the procedures outlined in M5 and/or the applicable sampling method. During the course of each test run, a leak check was conducted before and after sampling in each port. Leakage rates for each isokinetic sampling train were recorded on the appropriate field data sheets (see Appendix C-2). Table 7-2 summarizes the leak check results recorded for each isokinetic sampling train.

The M0030 sampling train leak checks were performed between the three (3)-way valve downstream of the probe and the pump. The acceptance criteria used for each M0030 leak check was a leakage rate of < 0.1 inches of mercury (inHg) as shown on the vacuum gauge after one (1) minute. All M0030 leak checks met acceptance criteria and were recorded on the appropriate field data sheets.

The M0040 sampling train initial and final leak check for each bag sample collected was performed between the probe and the vacuum pump. The acceptance criteria used for each M0040 leak check was a leakage rate of < 0.1 inHg as shown on the vacuum gauge after one (1) minute. All M0040 leak checks for each bag sample submitted for analysis from each run met acceptance criteria and were recorded on the appropriate field data sheets.

7.2.3 Field Blanks

Field blanks for exhaust gas sampling methods were collected during the field sampling program IAW the ANCDF SDC Emissions Test Plan.

7.3 SAMPLE MANAGEMENT

This section presents the sample preservation, transportation and receiving, holding times, traceability, and chain-of-custody (COC) documentation.

7.3.1 Sample Preservation

The exhaust gas samples were preserved by storing them on ice, as required, until packaged for shipment to the off-site laboratories. Samples requiring cooling were packed with ice to maintain temperatures within the required range for shipment to the laboratory. All shipments arrived at the laboratories at temperatures prescribed in the SAP/QAPP.

7.3.2 Sample Traceability

Sample traceability procedures were employed IAW the ANCDF SDC Emissions Test Plan to document the identity of each sample and its handling from its first existence as a sample until analysis and data reduction was completed. Custody records traced a sample from its collection

through all transfers of custody until it was transferred to the analytical laboratory. Internal laboratory records then documented the custody of the sample through its final disposition.

Sample integrity was maintained throughout all sampling and analysis programs. IAW SW-846 guidance, a sample was considered to be under a person's custody if the sample was:

- In that person's physical possession,
- In view of that person after acquiring possession,
- Secured by that person so that no one could tamper with the sample, and/or
- Secured by that person in an area that was restricted to authorized personnel.

These criteria were used to define the meaning of "custody" and to ensure the integrity of the test program samples from collection to data reporting. Restricted access to the samples was an integral part of the COC procedure. Samples were held within sight of the samplers or sample custodian or kept in sealed and secured containers at all times. Custody seals were applied to each sample container and/or the shipping container used to ship the samples to the off-site laboratories.

7.3.3 Sample Transportation and Receiving

The exhaust gas samples were stored on-site until they were transported via chartered aircraft or delivered by URS-Austin personnel to the respective TestAmerica laboratories. For chartered aircraft deliveries, a laboratory representative met the aircraft or URS-Austin sample custodian and secured custody of the samples directly from the URS-Austin sample custodian that accompanied the samples during transport. Upon receipt at the laboratories, the samples were logged into the laboratory sample tracking system with a unique laboratory sample number.

7.3.4 Sample Shipping

Samples were packaged, transported, and shipped IAW applicable US Department of Transportation, International Air Transportation Authority, and US EPA regulations. A COC form accompanied the samples. The COC form listed the parameters to be analyzed by the laboratory for each sample and the total number and type of samples shipped for analysis. Authorized laboratory personnel acknowledged receipt of shipment by signing and dating the COC form and returning a copy to URS-Austin.

7.3.5 Sample Holding Times

The sample preservation requirements and holding times are presented in Table A-10 of the SAP/QAPP. The sampling personnel preserved the samples by keeping them in a cooler packed with ice, during the transport, as required. Sample temperatures were monitored upon receipt at the laboratory. Holding times were monitored by keeping track of the day(s) from the time the samples were collected to the time that they were prepared, extracted, and/or analyzed. All samples met the holding time requirements as specified in Table A-10 of the SAP/QAPP.

7.3.6 COC Documentation

7.3.6.1 Labeling

Sample identification labels were used to ensure the required information was entered in the field. Exhaust gas sample labels were affixed to the appropriate container at the time of sample recovery. All samples collected were labeled with a preprinted sample label. Minor discrepancies between the sample name listed on the label and the name listed on the COC were resolved and the required analyses were performed.

7.3.6.2 Field Logbook

Information pertinent to the sampling was recorded in a sampling log. Entries were made in indelible ink and corrections generally followed the error correction protocol of one (1) line through the error, initial of the person performing the correction, and the date of the correction. Sampling personnel also recorded required information using the appropriate field data sheets. A copy of the field logbook and field data sheets is provided in Appendix C.

7.3.6.3 COC Forms

To establish the documentation necessary to trace sample possession from the time of collection, a COC form was filled out and accompanied every sample or group of individually identified samples. Each person who had custody signed the COC form.

7.4 SAMPLE COLLECTION

Exhaust gas sampling procedures were performed using the methods listed in Section 5.3. Isokinetic samples (M0010, M0010-TOC, M0023A, MM5E, M26A, and M29) and non-isokinetic samples (M0030 and M0040) were collected from ports located in the exhaust duct that extends between the induced draft fan and stack. The number and location of exhaust gas sampling points were determined IAW the procedures specified in M1. The sampling port locations met the requirements for acceptable distances from flow disturbances as specified in M1, and all traverse points were at least one-half (½) inch from the inner wall of the duct.

Verification of the absence of cyclonic flow in the sampling duct was performed on 12/04/10, with no cyclonic flow present. Cyclonic flow data sheets can be found in Appendix C-2. Calibration of the pitot tubes used for flow testing was performed IAW 40 CFR 60, Appendix A. Calibration data are presented in Appendix D.

Prior to sampling, all sampling train glassware was cleaned as required by each respective sampling method. All reagents used during sampling met the specifications of each respective sampling method. All sample containers were received in sealed boxes from the vendor with certificates of QA compliance IAW US EPA specifications.

Each sampling train was operated IAW the applicable method and SAP/QAPP requirements. For the isokinetic sampling trains the time, velocity pressure, orifice pressure, stack gas temperature, probe temperature, transfer line temperature (as applicable), sorbent trap inlet temperature (as applicable), silica gel impinger outlet temperature, dry gas meter inlet and outlet

temperatures, dry gas meter volume, and sample vacuum were recorded every five (5) minutes at each traverse point.

7.4.1 Isokinetic Sampling

For each isokinetic sampling train (i.e., M0010, M0010-TOC, M0023A, M26A, M29, and MM5E) the following key sampling procedures were performed to comply with US EPA requirements and the ANCDF SDC Emissions Test Plan:

- A minimum of three (3) dry standard cubic meters (dscm) total sample volume was collected over a 240-minute sampling period for each run with the exception of the C4bR5 M26A as noted below. The sample volume collected for each run is presented in Appendix C.
- One (1) field blank sample was collected by assembling a complete sampling train at the sampling area. The filter housing and probe on the blank train were heated to the appropriate temperature and the train was leak checked the same number of times as an actual sample train. The sample was then recovered in the same manner as an actual sample.
- Sample recovery was conducted both at the sampling location and in a controlled laboratory setting IAW the procedures specified in the reference method.
- For M0010, M0010-TOC, M0023A, and MM5E, the resin was packed in air-tight glass traps. The resin was purchased pre-cleaned and packed by the laboratory IAW the procedures specified in the reference method.
- For M0010, M0010-TOC, and M0023A the temperature of the sample gas stream between the outlet of the condenser and the inlet to the resin trap was maintained below 68°F (20°C).
- For M0010, M0010-TOC, M0023A, and MM5E, the temperatures of the probe, transfer line, and filter were maintained between 223 and 273°F. For the M29, the temperatures of the probe and filter were maintained between 223 and 273°F. For the M26A, the temperatures of the probe and filter were generally maintained between 248 and 273°F except as noted below. These temperatures were monitored and recorded on field data sheets during each run. The field data sheets are included in Appendix C-2.
- An initial and final leak check was conducted on each sampling train for each traverse with a maximum allowable leak rate of 0.02 cfm over a one (1)-minute time period. The initial pre-test leak check for each run was conducted at a minimum vacuum of approximately 10 to 15 inHg. The leak checks performed during the sampling run, at port change, and at the completion of the test were conducted at a vacuum greater than or equal to the maximum value reached during the sampling run. Passing leak check results were obtained in all instances. The leak check results are presented in Table 7-2 and Appendix C.
- An initial and final leak check was conducted for each test run on the Type S pitot tube at a minimum velocity pressure reading of 3.0 inches of water column

(inwc). Both the pitot impact opening and the static pressure opening on the pitot tube passed the leak check.

- Isokinetic sampling rates were maintained during each of the sampling runs. Percent isokinetic data for each run is presented in Appendix C.

During C4bR2 the M0023A nozzle was observed to have a small chip after first port sampling was completed. A successful leak check was performed with the chipped nozzle in place and the chipped nozzle was replaced with an identically sized nozzle to complete the run. Both nozzles were recovered with the front-half of the sampling train. This circumstance does not impact the validity of the C4bR2 M0023A sample.

The M0023A nozzle became detached from the probe assembly during the port change for C4bR3. This occurred while removing the probe from the vertical port and the nozzle fell into the exhaust duct and was not recoverable. This circumstance only impacts C4bR3 and no samples from this run were analyzed by the off-site laboratories.

During C4bR4, the M26A probe temperature was 274ºF, one (1) degree above the upper limit, for the final 25 minutes of sampling. Neither the particulate matter nor the acid gas results are expected to be impacted by this minor temperature discrepancy.

At the start of the second port of C4bR5, the M26A filter oven temperature was 334ºF. Corrective action was taken and within 15 minutes the temperature was within acceptance limits. The exact duration of the over-temperature condition is uncertain but with the final first port reading indicating the oven temperature was within acceptance limits, it could be no greater than two (2) hours and 20 minutes. This circumstance could have led to the loss of more volatile particulates that have boiling points between 273 and 334ºF but has no impact on the acid gas results. C4bR5 particulate matter results should be considered estimated as a result of this circumstance.

7.4.2 Non-Isokinetic Sampling

7.4.2.1 Volatile Organics

The following key sampling procedures were performed to comply with US EPA requirements and the ANCDF SDC Emissions Test Plan for M0030 sampling:

- Four (4) sets of sorbent traps and one (1) condensate sample were collected for each run. Each sorbent trap set consisted of one (1) Tenax tube and one (1) Tenax/charcoal tube.
- A field blank sample was collected during each run at the sampling location. The end caps on the blank set of traps were removed for the period of time required to exchange each pair of traps. After collection, the field blank sample was handled and analyzed in the same manner as the actual sample.
- A trip blank sample set was included with the actual sample traps during shipment to the site, sampling, and shipment to the laboratory. The end caps were not removed from the trip blank.
- A trip blank consisting of organic-free water was included with the actual sample condensates during shipment to the laboratory.

- The samples were delivered to the laboratory in a sealed cooler packed with ice. Documentation of analysis and a COC form relinquishing custody of the samples accompanied the samples.
- The samples were maintained at 0 to 6°C at all times, before and after sampling, prior to analysis.
- Each sample was collected by drawing the exhaust gas through the train at a rate of approximately 0.5 L/min for 40 minutes. Approximately 20 dry standard liters (dsL) of exhaust gas sample volume were pulled through each set of traps. The sample volume collected and field data sheets for each run are presented in Appendix C-2.
- The cooling water used for circulating through the condensers came from an ice water bath. The temperature of the sample gas stream between the outlet of the first condenser and the Tenax sorbent trap and between the outlet of the second condenser and the Tenax/charcoal trap was maintained below 68°F (20ºC).
- An initial leak check was conducted for each sample collected, with a maximum allowable leak rate of 2.5 millimeters mercury (mmHg) over a one (1)-minute time period while pulling a vacuum greater than (>) 10 inHg (this value exceeds the normal operating pressure). A final leak check was conducted for each sample collected, with a maximum allowable leak rate of 2.5 mmHg over a one (1)-minute time period while pulling a vacuum of greater than or equal to the highest vacuum encountered during collection of the sample. The M0030 sampling train passed all leak checks. The leak check results are presented in Appendix C-2.

7.4.2.2 Volatile TOCs

The following key sampling procedures were performed to comply with US EPA requirements and the ANCDF SDC Emissions Test Plan for M0040 sampling:

- Approximately 30 L of exhaust gas was collected per bag sample collected. The sample volume collected and field data sheets for each run are presented in Appendix C.
- All bag samples were collected into Tedlar bags.
- One (1) condensate sample was collected per bag sample collected. Amber glass septum cap vials were used to collect the condensate.
- Two (2) bag samples were collected during each run.
- A daily field blank sample was collected.
- The temperatures of the probe, filter, and valve were maintained between 130 and 140ºC (266 and 284ºF) during collection of each sample.
- The condenser temperature was maintained at a temperature of < 20ºC (68ºF). Temperatures were recorded every five (5) minutes. Field data sheets documenting the temperatures are found in Appendix C.

7.4.2.3 O_2 and CO_2

M3B sampling was performed to determine O_2 and CO_2 concentrations by collecting an integrated bag sample that was analyzed using an Orsat analyzer.

- Integrated bag samples were collected during each run in conjunction with one (1) of the isokinetic sampling trains.
- Each sample was collected at a constant rate during each traverse into a Tedlar bag and leak checked prior to sampling.
- The Orsat analyzer was successfully leak checked prior to analysis of each sample according to the procedures in M3B.
- Each Orsat bag sample was analyzed three times (3X) and the average was calculated and used for reporting O_2 and CO_2 concentration. Orsat analysis readings are recorded on field data sheets included in Appendix C-2.

7.4.2.4 SO_2

SO_2 was determined during each run IAW M6C. Two (2) SO_2 runs were completed for each run that encompassed the sampling times of the isokinetic sampling trains.

A logbook was kept and calibrations, QC activities, routine maintenance, and repair activities were documented for the SO_2 testing. Activities related to the pre-test checks (e.g., calibration drift/error) were also recorded. All data related to SO_2 sampling and the pre-test activities were logged using the DAS.

The analyzer was calibrated IAW M6C (references M7E). The QC measures included the use of US EPA protocol calibration gases, pre- and post-test run calibrations, calibration error, and bias tests. Copies of the certifications for the gas standards are provided in Appendix D and the results are provided in Appendix F-1.

7.4.2.5 NO_x

NO_x was determined during each run IAW M7E. Two (2) NO_x runs were completed for each run that encompassed the sampling times of the isokinetic sampling trains.

A logbook was kept and calibrations, QC activities, routine maintenance, and repair activities were documented for the NO_x testing. Activities related to the pre-test checks (e.g., calibration drift/error and response time tests) were also recorded. All data related to NO_x sampling and the pre-test activities were logged using the DAS.

The analyzer was calibrated IAW M7E. The QC measures included the use of US EPA protocol calibration gases, conversion efficiency, pre- and post-test run calibrations, calibration error, and bias tests. Copies of the certifications for the gas standards are provided in Appendix D and the results are provided in Appendix F-1.

7.4.2.6 CO

CO was determined during each run IAW M10. Two (2) CO runs were completed for each run that encompassed the sampling times of the isokinetic sampling trains.

A logbook was kept and calibrations, QC activities, routine maintenance, and repair activities were documented for the CO testing. Activities related to the pre-test checks (e.g., calibration drift/error) were also recorded. All data related to CO sampling and the pre-test activities were logged using the DAS.

The analyzer was calibrated IAW M10 (references M7E). The QC measures included the use of US EPA protocol calibration gases, pre- and post-test run calibrations, calibration error, and bias tests. Copies of the certifications for the gas standards are provided in Appendix D and the results are provided in Appendix F-1.

7.4.2.7 Mustard

During each run a DRE DAAMS was used to collect a sample for the determination of emission levels of mustard agent IAW with a site specific procedure. The flow through each tube was verified prior to and after collection of each set of tubes IAW site-specific procedures.

There were two DRE DAAMS sampling anomalies during C4b. For C4bR2, a quality plant (QP) tube was not aspirated with the samples and QP results are not available for this run. For C4bR3, the DRE DAAMS sampling array was started approximately 15 minutes prior to the isokinetic sampling trains commencing sampling of the second port. The DRE DAAMS completed sampling at the same time as the isokinetic sampling trains and “no credit” was taken for the additional sample time when determining total volume sampled for DRE calculations.

7.5 DATA VALIDATION RESULTS

Blank and spiked samples were analyzed IAW the QA/QC requirements specified in the ANCDF SDC Emissions Test Plan. Blank samples included reagent blanks, field blanks, trip blanks, and method blanks. Method blanks were used to measure any contaminants that may have been introduced to the sample during sample preparation and analysis in the laboratory. Reagent blanks were used to assess the cleanliness of the reagents used in the field. Field blanks were used to measure any contaminants that may have been introduced to the samples from the sampling equipment and sampling technique.

Trip blanks provide a measure of any sample contamination that may be introduced during shipping of the samples from the site to the laboratory. The spike samples consisted of matrix spike and matrix spike duplicates (MS/MSD), laboratory control samples and laboratory control sample duplicates (LCS/LCSD, blank spikes), and surrogate spikes. These samples were used to assess method performance and the recovery efficiency of the various analytical methods used in this work. Exhaust gas samples are generally consumed in their entirety during the initial preparation and analysis of each sample. In instances where re-extraction and/or analysis are indicated in response to poor spike recovery, such action cannot be taken, as there is no additional sample aliquot available.

Analytical precision was assessed by performing spikes and spike duplicates with the analytes of interest and measuring the relative percent difference (RPD) between the duplicate analyses. The recovery of the spiked samples was used to assess the bias (accuracy) of the analysis. The surrogate spikes, which are authentic standards (not likely to be found in the matrix) added to every organic sample prior to preparation and/or analysis, were used to provide an additional measure of QC for each sample. Surrogate spikes provide data that allows items such as matrix effects, gross sample-processing errors, and extraction efficiency to be assessed.

The following subsections summarize the QA/QC assessment for the exhaust gas samples collected and analyzed.

7.5.1 Semivolatile Organics

During each run, a M0010 sampling train was used to collect samples for the determination of emission levels of the semivolatile PICs and TICs as specified in the SAP/QAPP. M0010 samples collected during each run were extracted IAW M3542 and analyzed IAW M8270C. QC protocols included the use of a field surrogate, which was spiked onto the XAD trap prior to sampling, additional surrogates added to the samples in the laboratory prior to extraction, and internal standards added prior to analysis. The preparation of the M0010 sampling train yields three (3) fractions for analysis by M8270C. Table 7-3 provides a summary of the dates each sample was prepared and analyzed and demonstrates all holding time requirements were satisfied.

GC/MS Tuning

GC/MS instruments were tuned to ensure mass resolution, identification, and sensitivity. For semivolatile sample analysis, instruments were tuned by analyzing decafluorotriphenylphosphine at the beginning of each 12-hour period during which samples or standards are analyzed and comparing the ion abundance for selected mass to electron ratios to the ion abundance criteria specified in M8270C. All GC/MS instrument tunings met the criteria during analysis of the samples.

An additional part of the M8270C tune is the system performance check on the injection port inertness and column performance. These additional items were evaluated with each instrument. The criteria for injection port inertness and peak tailing were met for each tune check.

Instrument Calibration

Requirements for instrument calibration are established to ensure the instrument is capable of producing acceptable qualitative and quantitative data. Initial calibration (ICAL) demonstrates the instrument is capable of producing a linear calibration curve, and continuing calibration demonstrates maintenance of the linear curve on a daily basis. System performance check compounds (SPCCs) and calibration check compounds (CCCs) must meet criteria specified in the method for the calibration to be valid.

Instruments were initially calibrated by analyzing standards containing compounds of interest at a minimum of five (5) concentrations. Because of the extensive target analyte list, there are two (2) initial calibrations (ICALs) associated with each instrument with each ICAL containing a

subset of the entire target analyte list. These two (2) calibrations are referred to in the raw data as the "HSL" and "AP9" lists. The concentrations of each compound were quantitated relative to the closest eluting internal standard and a response factor (RF) was determined. The average RFs for each compound were calculated. The four (4) SPCC compounds were checked for a minimum average RF. The minimum acceptable average RF is 0.05. If the minimum RF criteria are not met, all detects should be considered estimated and NDs should be flagged as "rejected" (unusable).

The relative standard deviation (RSD) for the CCCs was calculated using the RF from the ICAL. The RSD for each CCC should be < 30% for the calibration to be valid. The RSD for each non-CCC should be < 15% if the average RF was used by the laboratory for quantitation. If the RSD for any target analyte is > 15%, an alternate means of quantitation should be employed (e.g., use of a quadratic curve). When the RSD is > 15% but < 90% all detects and NDs should be considered estimated. When the RSD is > 90% all detects should be considered estimated and NDs should be flagged as "rejected" (unusable).

The ICAL curve was checked and verified once every 12 hrs of analysis time for each target compound. This verification was accomplished by analyzing a calibration standard and checking the SPCCs and CCCs. The RFs for the SPCCs and target compounds were evaluated similarly for both the continuing and initial calibration.

The CCCs were evaluated by comparing the % drift between the CCC standard concentrations with the measured concentrations. The % drift for each CCC should be < 20% for the continuing calibration to be valid. When the % drift is > 20% but < 90% all detects and NDs should be considered estimated. When the % drift is > 90% all detects should be considered estimated and NDs should be flagged as "rejected" (unusable).

All samples were quantitated against the same initial calibration (i.e., instrument SV5 on 07/07/11 [HSL] and 07/08/11 [AP9]) and all criteria were met without exception and qualification of the data is not indicated. All samples were run following the same continuing calibration (i.e., instrument "SV5" on 08/17/11) and all criteria were met with the exception of the RSD of methyl methanesulfonate (-22.6%) and methapyrilene (-25.5%). All associated sample results for methanesulfonate and methapyrilene should be considered estimated.

Surrogate Standard Results

Laboratory performance on individual samples was established by means of spiking activities. All samples were spiked with six (6) surrogate compounds prior to sample analysis. Each XAD trap was spiked with a field surrogate, 1,2-dichlorobenzene-d_4, to provide an indication of possible breakthrough or loss due to sampling handling procedures.

Evaluation criteria for surrogates include estimating sample results when any one (1) of the surrogates has recoveries outside the acceptance limits provided the recovery is ≥ 10%. If any surrogate has < 10% recovery, sample results for that fraction may be rejected. Surrogate recoveries for all field samples were within SAP/QAPP QC limits. Surrogate recoveries are presented in Table 7-4.

Internal Standard Performance

Internal standards are monitored to ensure GC/MS sensitivity and response is stable during every instrument run. Six (6) internal standards were added to each sample prior to analysis: 1,4-dichlorobenzene-d_4, naphthalene-d_8, acenaphthene-d_{10}, phenanthrene-d_{10}, chrysene-d_{12}, and perylene-d_{12}.

M8270C specifies that internal standard area counts for the continuing calibration standard must not vary by more than a factor of two (2) (-50% to + 100%) from the associated ICAL standards and the retention time (RT) must not vary by > 30 seconds. Internal standard acceptance criteria for samples and blanks are not specified by M8270C. For validation purposes, samples and blanks were evaluated to verify internal standard area counts did not vary by more than a factor of two (2) (-50% to + 100%) from the associated continuing calibration standard and the RT did not vary by > 30 seconds. Should the area response be outside the criteria, professional judgment is used to assess the impact on the reported results. All internal standard area and RTs were found to have met acceptance criteria for all continuing calibrations, samples, and blanks.

Method Blank Results

Laboratory (method) blank samples are analyzed to determine the existence and magnitude of contamination resulting from laboratory activities.

No target analytes were found in the laboratory blank associated with the front-half or condensate fractions and qualification of the reported sample results is not indicated. The laboratory blank associated with the back-half train fractions had benzoic acid (32 micrograms [ug]), bis(2-ethyl hexyl)phthalate (18 ug), and di-n-butyl phthalate (15 ug) detected. These analytes were found in all back-half fractions at concentrations that were ≤ five times (5X) the method blank concentration. All reported results for these analytes should be considered ND at the reported concentration. No other target analytes were found in the back-half fraction method blank above the RL.

Field Blank Results

Field blanks are indicators of ambient and sample handling contamination. A field blank was collected by setting up a sampling train at the sampling location, heating the train, and performing leak checks. The field blank is recovered in the same manner as the field samples.

No target analytes were detected in the condensate fractions of the field blank. Bis(2-ethyl hexyl) phthalate (3.2 ug) and di-n-butyl phthalate (5.4 ug) were found in the front-half field blank fraction. Benzoic acid (16 ug), bis(2-ethyl hexyl) phthalate (25 ug) and di-n-butyl phthalate (18 ug) were found in the back-half field blank fraction. The sample results are not corrected for field blank contamination. However, all associated sample results for these analytes should be considered estimated.

Reagent Blank Results

Reagent blanks are indicators of the cleanliness of the reagents and materials used in the field. Reagent blanks were collected that included the filter, solvent, resin, and organic-free water.

No compounds were reported at or above the RL in any of the reagent blanks with the exception of bis(2-ethyl hexyl) phthalate (2.8 ug) in the filter blank and benzoic acid (39 ug), bis(2-ethyl hexyl) phthalate (22 ug), and di-n-butyl phthalate (11 ug) found in the in the resin blank. The sample results are not corrected for reagent blank contamination. However, all associated sample results for this analyte should be considered estimated.

Trip Blank Results

Trip blanks are indicators of ambient and sample handling contamination introduced during shipping of the samples. A trip blank consisting of a resin trap was shipped with the samples to the laboratory and analyzed.

Benzoic acid (41 ug), bis(2-ethyl hexyl) phthalate (17 ug), and di-n-butyl phthalate (8.5 ug) found in the in the trip blank. These analytes were also found in the associated laboratory blank. The sample results are not corrected for trip blank contamination. However, all associated sample results for this analyte should be considered estimated.

LCS Results

LCS/LCSDs were analyzed to provide information on the accuracy of the analytical method and on laboratory performance. All LCS/LCSD recoveries and RPD were within SAP/QAPP QC limits. The results of the LCS/LCSD analyses are presented in Table 7-5.

7.5.2 Semivolatile and Nonvolatile TOCs

Exhaust gases were collected for semivolatile and nonvolatile total organics IAW M0010-TOC. The following subsections discuss the semivolatile and nonvolatile total organic analysis. The preparation of the M0010-TOC sampling train yields one (1) fraction that is split and analyzed by for semivolatile and nonvolatile TOCs. Table 7-6 provides a summary of the dates each sample was prepared and analyzed and demonstrates all holding time requirements were satisfied.

Instrument Calibration

Requirements for instrument calibration are established to ensure the instrument is capable of producing acceptable qualitative and quantitative data. ICAL demonstrates the instrument is capable of acceptable performance prior to sample analysis, and continuing calibration sample analyses verify that the ICAL is still valid. A multi-point calibration curve was prepared to determine an average RF for the C_8-C_{17} range. Instrument calibration met all acceptance criteria.

For the nonvolatile total organics the analytical balance was calibrated using three (3) different weights before and after sample analysis. These performance checks demonstrate that the analytical balance was in control and capable of producing valid results.

Surrogate Standard Results

For the semivolatile total organics analysis, laboratory performance on individual samples is established by means of spiking samples with known concentrations of selected compounds. All

samples were spiked with n-heptadecane as a surrogate compound prior to sample analysis. Surrogates are not used with the nonvolatile total organics analysis.

Evaluation criteria for the surrogate include estimating sample results when any surrogate has a recovery ≥ 10%, but below the lower SAP/QAPP QC limit. If any surrogate has < 10% recovery, concentrations of detected compounds are qualified as estimated and compounds with concentrations < method detection limit (MDL) are rejected. All surrogate recoveries were within acceptance limits. Qualification of the results based on surrogate recovery is not indicated. Surrogate recoveries are shown in Table 7-6.

Method Blank Results

A method blank was prepared and analyzed along with the field samples to determine the existence and magnitude of contamination resulting from laboratory activities. The method blank results also reflect the background level of artifacts present in resin.

The semivolatile fraction method blank showed that there was contamination below the RL of 0.15 milligrams (mg) at a reported concentration of 0.10 mg. The nonvolatile method blank showed contamination above the RL at a reported concentration 3.7 mg. All semivolatile and nonvolatile total organic sample results should be considered estimated and biased high.

Field Blank Results

Field blanks are indicators of ambient and sample handling contamination. A field blank was collected by setting up a sampling train, bringing the train to the sampling location, heating the train, and performing leak checks. The field blank is recovered in the same manner as the field samples.

The semivolatile fraction of the field blank showed contamination at 1.5 mg. The sample results are not corrected for field blank contamination. The nonvolatile fraction of the field blank showed no contamination. The sample results are not corrected for field blank contamination. However, all semivolatile total organic sample results should be considered estimated and biased high considering the contamination present in the field blank.

Reagent Blank Results

Reagent blanks are indicators of the cleanliness of the reagents and materials used in the field. Reagent blanks were collected that included the filter, solvent, and organic-free water.

The semivolatile fraction of the reagent blank showed contamination at 1.7 mg. The nonvolatile fraction showed contamination at 1.9 mg. The sample results are not corrected for reagent blank contamination. However, all semivolatile and nonvolatile total organic sample results should be considered estimated and biased high considering the contamination present in the field blank.

Trip Blank Results

Trip blanks are indicators of ambient and sample handling contamination introduced during shipping of the samples. A trip blank consisting of a resin trap was shipped with the samples to the laboratory.

The semivolatile fraction of the trip blank showed contamination at 2.0 mg. No nonvolatile organics were found above the RL. The sample results are not corrected for trip blank contamination. However, all semivolatile total organic sample results should be considered estimated and biased high considering the contamination present in the trip blank.

LCS Results

LCSs are samples of known concentration that are prepared and analyzed along with the samples. The LCS is used to monitor the overall performance of the preparation and analysis process. The LCSs are presented in Table 7-7. All LCS results were within SAP/QAPP QC limits.

7.5.3 Dioxins/Furans

During each run, a M0023A sampling train was used to collect samples for the determination of emission levels of dioxins/furans as specified in the SAP/QAPP.

M0023A samples collected during each run were extracted IAW M0023A and analyzed IAW M8290 for dioxins/furans. QC protocols included the use of field surrogates, which were spiked onto the XAD trap prior to sampling, additional surrogates, and internal standards added to the samples in the laboratory prior to extraction and analysis. The preparation of the M0023A sampling train for dioxin/furan analysis yields two (2) fractions for analysis: the front-half which includes the front-half rinse and particulate filter and the back-half which includes the XAD trap and solvent rinse from the XAD trap forward to the back-half of the filter housing. Table 7-8 provides a summary of the dates each sample was prepared and analyzed and demonstrates all holding time requirements were satisfied.

GC/MS Tuning

GC/MS instruments were tuned to ensure mass resolution, identification, and sensitivity. For dioxin/furan sample analysis, instruments were tuned by analyzing perfluorokerosene prior to each 12-hour period during which samples or standards were analyzed and comparing the mass resolution for selected mass to electron ratios to the mass resolution criteria of 10,000 (10% valley definition). All GC/MS instrument tunes met the criteria during analysis of the samples.

Instrument Calibration

Requirements for instrument calibration are established to ensure the instrument is capable of producing acceptable qualitative and quantitative data for target compounds. ICAL demonstrates that the instrument is capable of producing a linear curve, and continuing calibration demonstrates maintenance of the linear curve on a daily basis.

Instruments were initially calibrated by analyzing standards containing compounds of interest at five (5) concentrations. The concentrations of each compound were quantitated relative to the closest eluting internal standard, and RFs and average RFs for each compound were calculated.

The RSD for labeled and unlabeled dioxin/furan standards should be ≤ 30% and ≤ 20%, respectively, for the calibration to be valid. The ICAL curve was checked and verified once every 12 hours of analysis time for each target compound. This verification was accomplished by analyzing a calibration standard and checking target analytes and internal standards. The RFs for the target compounds were evaluated similarly for both the continuing and the initial calibration.

The target analytes were evaluated by comparing the % drift between the standard concentrations with the measured concentrations. The % drift for labeled and unlabeled dioxin/furan standards should be ≤ 30% and ≤ 20%, respectively, for the beginning continuing calibration to be valid and ≤ 35% and ≤ 25%, respectively, for the ending continuing calibration to be valid.

All ICAL and continuing calibration criteria were met and qualification of the sample results is not indicated.

Internal and Surrogate Standard Results

Laboratory performance on individual samples was established by means of spiking activities. All samples were spiked with nine (9) internal standard compounds prior to sample analysis. Evaluation criteria for internal standards include estimating sample results when any one (1) of the internal standards have recoveries outside the acceptance limits provided the recovery is ≥ 10%. If any internal standard has < 10% recovery, associated sample results for that fraction may be rejected.

Sampling efficiencies on individual samples are established by means of spiking activities. Prior to sampling, the resin traps of all samples were spiked with five (5) labeled compounds. The surrogates are used to monitor efficiency and are not used in the quantitation of unlabeled analytes. Prior to extraction, the same five (5) standards were spiked onto the particulate filter to monitor the extraction efficiency of the front-half fraction of the sampling train. Low recoveries, < 70%, could be indicative of breakthrough taking place during sampling. Table 7-9 presents the internal and surrogate standard recoveries for all samples.

All internal and surrogate standard results were within acceptance limits with the exception of 13_c-1,2,3,4,7,8-HxCDD for samples SDC-M4B-1-M0023A-FH, SDC-M4B-1-M0023A-BH, SDC-M4B-FB-M0023A-BH, and SDC-M4B-TB-M0023A-XAD. In each instance the recovery was less than the lower control limit but > 10%. Results for these samples should be considered estimated.

Method Blank Results

Laboratory (method) blank samples were analyzed to determine the existence and magnitude of contamination resulting from laboratory activities. No target analytes were reported at or above the RL in laboratory blanks associated with the front- and back-half fractions and qualification of the results was not indicated.

Field Blank Results

Field blanks are indicators of ambient and sample handling contamination. A field blank was collected by setting up a sampling train, bringing the train to the sampling location, heating the train, and performing leak checks. The field blank is recovered in the same manner as the field samples. The front-half fraction of the field blank showed contamination with octa-chlorinated dibenzofuran (CDF) (230 picograms [pg]). The sample results are not corrected for field blank contamination. However, all octaCDF sample results should be considered estimated and biased high considering the contamination present in the field blank.

Reagent Blank Results

Reagent blanks are indicators of the cleanliness of the reagents and materials used in the field. Reagent blanks were collected that included the filter and solvents. No target analytes were reported at or above the RL in any of the reagent blanks samples.

Trip Blank Results

Trip blanks are indicators of ambient and sample handling contamination introduced during shipping of the samples. A trip blank consisting of a resin trap was shipped with the samples to the laboratory and analyzed. No target analytes were reported at or above the RL in the trip blank.

LCS Results

LCSs were analyzed to provide information on the accuracy of the analytical method and on laboratory performance. The LCSs associated with the preparation and analysis of the field samples are presented in Table 7-10. All LCS results were within SAP/QAPP QC limits.

7.5.4 Volatile Organics

During each run, a M0030 sampling train was used to collect samples for the determination of emission levels of volatile PICs and TICs as specified in the SAP/QAPP. M0030 samples collected during each run were analyzed IAW M5041A and M8260B. Four (4) Tenax tube samples, four (4) Tenax/charcoal tube samples, and a single (1) condensate sample were collected during each run. Prior to analysis, each sample was spiked with surrogate standards. Each tube was prepared and analyzed separately, allowing breakthrough to be assessed. Table 7-11 provides a summary of the date each sample was analyzed and demonstrates all holding time requirements were satisfied.

GC/MS Tuning

Samples were analyzed by a GC/MS tuned to ensure mass resolution, identification, and sensitivity. For volatile organic sample analyses, instruments were tuned by analyzing 4-bromofluorobenzene at the beginning of each 12-hour period during which samples or standards were analyzed and comparing the ion abundance for selected mass to electron ratios to the ion abundance criteria specified in M8260B. All associated GC/MS instrument tunings met requirements prior to sample analysis.

Instrument Calibration

Requirements for instrument calibration were established to ensure the instrument was capable of producing acceptable qualitative and quantitative data for target compounds. ICAL demonstrates that the instrument is capable of producing a linear curve, and continuing calibration demonstrates maintenance of the linear curve on a daily basis. SPCCs and CCCs must meet criteria in the method for the calibration to be valid.

Instruments were initially calibrated by analyzing standards containing compounds of interest at five (5) concentrations. The concentrations of each compound were quantitated relative to the closest eluting internal standard and RFs. The average RFs for each compound were calculated. The five (5) SPCC compounds were checked for a minimum average RF. The minimum acceptable average RF was 0.10 for chloromethane, 1,1-dichloroethane, and bromoform. The minimum acceptance average RF was 0.30 for 1,1,2,2-tetrachloroethane and chlorobenzene. If the minimum RF criteria are not met, all detects should be considered estimated and NDs should be flagged as "rejected".

The RSD for the CCCs was calculated using the RF from the ICAL. The RSD for each CCC must be < 30% for the calibration to be valid. The RSD for each non-CCC should be < 15% if the average RF was used by the laboratory for quantitation. If the RSD for any target analyte is > 15%, an alternate means of quantitation should be employed (e.g., use of a quadratic curve). When the RSD is > 15% but < 90% all detects and NDs should be considered estimated. When the RSD is > 90% all detects should be considered estimated and NDs should be flagged as "rejected".

The ICAL curve was checked and verified once every 12 hours of analysis time for each target compound. This verification was accomplished by analyzing a calibration standard and checking the SPCCs and CCCs. The RFs for the SPCCs and target compounds were evaluated similarly for both the continuing and initial calibration.

The CCCs were evaluated by comparing the % drift between the CCC standard concentrations with the measured concentrations. The % drift for each CCC should be < 20% for the continuing calibration to be valid. When the % drift is > 20% but < 90% all detects and NDs should be considered estimated. When the % drift is > 90% all detects should be considered estimated and NDs should be flagged as "rejected".

All ICAL criteria were met with the following exceptions:

- For the ICAL associated with samples SDC-M4B-1-M0030-COND, SDC-M4B-2-M0030-COND, SDC-M4B-4-M0030-COND, SDC-M4B-5-M0030-COND, and SDC-M4B-1-M0030-COND BK (i.e., instrument "R" on 04/15/11), the RSD for target analytes was < 15% with the exception of 2-propanol (15.1%). All associated sample results for 2-propanol should be considered estimated.

All continuing calibrations were met with the following exceptions:

- For the continuing calibration associated with samples SDC-M4B-1-M0030-COND, SDC-M4B-2-M0030-COND, SDC-M4B-4-M0030-COND, SDC-M4B-5-M0030-COND,

and SDC-M4B-1-M0030-COND BK (i.e., instrument "R" on 08/16/11), the RSD for target analytes was < 20% with the exception of dichlorodifluoromethane (50.5%), chloromethane (30.3%), bromomethane (44.6%), iodomethane (45.0%), and trans-1,4-dichloro-2-butene (22.1%). All associated sample results for dichlorodifluoromethane should be considered estimated.

- For the continuing calibration associated with samples SDC-M4B-1-M0030-T BK, SDC-M4B-1-M0030-TC BK, SDC-M4B-2-M0030-T BK, SDC-M4B-2-M0030-TC BK, SDC-M4B-4-M0030-T BK, SDC-M4B-4-M0030-TC BK, SDC-M4B-5-M0030-T BK, SDC-M4B-5-M0030-TC BK, SDC-M4B-TB-M0030-T1, SDC-M4B-TB-M0030-TC1, SDC-M4B-2-M0030-T1, SDC-M4B-2-M0030-TC1, SDC-M4B-2-M0030-T2, SDC-M4B-2-M0030-TC2, SDC-M4B-2-M0030-T3, SDC-M4B-2-M0030-TC3, SDC-M4B-2-M0030-T4, and SDC-M4B-2-M0030-TC4, (i.e., instrument "Z" on 08/15/11), the RSD for target analytes was < 20% with the exception of dichlorodifluoromethane (44.3%), acetone (-20.3%), 2-propanol (-72.2%), cis-1,4-dichloro-2-butene (-21.9%), and trans-1,4-dichloro-2-butene (-26.2%). All associated sample results for these compounds should be considered estimated.
- For the continuing calibration associated with samples SDC-M4B-5-M0030-T1, SDC-M4B-5-M0030-TC1, SDC-M4B-5-M0030-T2, SDC-M4B-5-M0030-TC2, SDC-M4B-5-M0030-T3, SDC-M4B-5-M0030-TC3, SDC-M4B-5-M0030-T4, and SDC-M4B-5-M0030-TC4, (i.e., instrument "Z" on 08/17/11), the RSD for target analytes was < 20% with the exception of dichlorodifluoromethane (52.0%) and 2-propanol (-67.3%). All associated sample results for these compounds should be considered estimated.

The ICAL establishes a linear range with an upper limit determined by the highest ICAL standard. When the initial analysis of a sample has a concentration of any analyte that exceeds the ICAL range, the sample should be diluted and reanalyzed if possible. For M0030, neither dilution nor reanalysis is possible as the sample is used in its entirety during the initial analysis. For M0030, analyte concentrations that exceed the linear range but do not saturate the detector should be considered estimated and those that do saturate the detector should be rejected. All reported results were within the linear range of the instrument on which they were analyzed.

Surrogate Standard Results

Laboratory performance on individual samples was established by means of spiking activities. four (4) surrogate compounds prior to sample analysis – dibromofluoromethane, 1,2-dichloroethane-d_4, toluene-d_8, and 4-bromofluorobenzene.

Evaluation criteria for surrogates include estimating sample results when any one (1) of the surrogates has recoveries outside the acceptance limits provided the recovery is ≥ 10%. If any surrogate has < 10% recovery, sample results for that fraction may be rejected. Surrogate recoveries are presented in Table 7-11. All surrogate recoveries were within acceptance limits and qualification of the data is not indicated.

It is noted that the laboratory evaluated the surrogate recoveries using statistically derived limits that were more stringent than those indicated in the SAP/QAPP. The laboratory developed limits

for both sorbent tubes and condensate. When the sorbent tube surrogate recoveries are evaluated using the laboratory derived limits there is no change in the assessment. Table 7-11 lists the acceptance limits specified in the SAP/QAPP.

Internal Standard Results

Internal standards are monitored to ensure GC/MS sensitivity and response is stable during every instrument run. Three (3) internal standards were added to each sample prior to analysis: fluorobenzene, chlorobenzene-d_5, and 1,4-dichlorobenzene-d_4.

M8260B specifies that internal standard area counts for the continuing calibration standard must not vary by more than a factor of two (2) (-50% to + 100%) from the associated ICAL standards and the RT must not vary by > 30 seconds. Internal standard acceptance criteria for samples and blanks are not specified by M8260B. For validation purposes, samples and blanks were evaluated to verify that internal standard area counts did not vary by a factor of two (2) (-50% to + 100%) from the associated continuing calibration standard and the RT did not vary by > 30 seconds. Should the area response be outside the criteria, professional judgment is used to assess the impact on the reported results. Internal standard area and RT were found to have met acceptance criteria for all samples.

Method Blank Results

Laboratory (method) blank samples were analyzed to determine the existence and magnitude of contamination resulting from laboratory activities.

Acetone, chloromethane, methylene chloride, and toluene were found in one (1) or more of the method blanks. Field samples have not been corrected for method blank contamination, thus providing the most conservative emissions results. However, all associated sample results for the aforementioned analytes should be considered estimated.

Field Blank Results

Field blanks are indicators of ambient and sample handling contamination. A field blank was collected with each run.

Acetone, chloromethane, chlorobenzene, hexane, methylene chloride, and toluene were detected in one (1) or more field blanks. Field samples have not been corrected for field blank contamination, thus providing the most conservative emissions results. However, all associated sample results for the aforementioned analytes should be considered estimated.

Trip Blank Results

A trip blank is an indicator of ambient and sample handling contamination introduced during shipping of media and samples. A trip blank consists of a Tenax tube, a Tenax/charcoal tube, and reagent water in a septum cap vial that were shipped with the samples to the laboratory and analyzed.

Acetone, methylene chloride, and toluene were detected in the Tenax and Tenax/charcoal trip blank samples. Field samples have not been corrected for trip blank contamination, thus providing the most conservative emissions results. However, all associated results for the aforementioned analytes should be considered estimated.

Acetone, 1,2-dichloropropane, cis-1,3-dichloropropene, methylene chloride, tetrachloroethene, and toluene were detected in the condensate trip blank sample. Field samples have not been corrected for trip blank contamination, thus providing the most conservative emissions results. However, all associated results for the aforementioned analytes should be considered estimated.

LCS/LCSD Results

For the Tenax and Tenax/charcoal tubes, the entire sample is consumed with each analysis and it is not possible to provide MS/MSDs. For the condensate fraction, a single sample container is provided to the laboratory and though the entire sample is not consumed, the laboratory procedure does not provide for replicate analyses from the same container. For these samples, LCS/LCSDs were prepared in the laboratory by spiking blanks with known concentrations of selected compounds provided by an independent vendor. The LCS/LCSD results are summarized in Table 7-12. QC objectives were met in all instances and qualification of the data is not indicated.

It is noted that the SAP/QAPP requires five (5) compounds to be spiked and evaluated for LCS/LCSD pairs. The laboratory spiking solution contains more than the five (5) required compounds. Only the five (5) compounds indicated in the SAP/QAPP were considered when evaluating the useability of the data with respect to LCS/LCSD performance.

Breakthrough

The results of compounds detected on the front and back tubes of each M0030 pair were evaluated for breakthrough to determine if a compound may have exceeded the absorbing capacity of the tube pair. According to EPA/625/6-89/023, breakthrough is indicated when > 30% of a compound detected on the front tube is present in the back tube. The breakthrough analysis does not apply when < 75 nanograms (ng) is detected on the back tube. With the exceptions noted below, breakthrough determination was not required as no target analytes were detected on both the front and back tube when a compound was present on the back tube at a concentration of ≥75 ng for any sample.

The chloromethane results from C4bR1-Sets 1/2/3/4, C4bR4-Sets 1/2/3/4, and C4bR5-Sets 1/2/3/4, meet the US EPA's definition of breakthrough as reportable concentrations were found on the corresponding Tenax tube and > 75 ng was detected on each Tenax/charcoal tube. Chloromethane is a common analysis artifact and is often detected in laboratory, field, and trip blanks. Considering the actual concentrations detected on the Tenax tubes and typical blank results, it is not believed that these results are indicative of actual breakthrough. However, all associated sample results for chloromethane should be considered estimated.

The acetone results from C4bR1-Sets 2/3/4, C4bR2-Sets 2/3/4, C4bR4-Sets 1/2/3/4, and C4bR5-Sets 1/2/3/4, meet the US EPA's definition of breakthrough as reportable concentrations were found on the corresponding Tenax tube and > 75 ng was detected on each Tenax/charcoal

tube. Acetone is a common analysis contaminant and is often detected in laboratory, field, and trip blanks. Considering the actual concentrations detected on the Tenax tubes and typical blank results, it is not believed that these results are indicative of actual breakthrough. However, all associated sample results for acetone should be considered estimated.

The methylene chloride results from C4bR1-Sets 1/2/3/4, C4bR2-Sets 1/2/3/4, C4bR4-Sets 1/2/4, and C4bR5-Sets 1/2/3/4, meet the US EPA's definition of breakthrough as reportable concentrations were found on the corresponding Tenax tube and > 75 ng was detected on each Tenax/charcoal tube. Methylene chloride is a common field and laboratory contaminant and was detected in associated laboratory, field, and trip blanks. Considering the actual concentrations detected on the Tenax tubes and the associated blank results, it is not believed that these results are indicative of actual breakthrough. However, all associated sample results for methylene chloride should be considered estimated.

The vinyl chloride results from C4bR1-Sets 1/2/3/4, C4bR4-Sets 1/2/3/4, and C4bR5-Sets 1/2/3/4, meet the US EPA's definition of breakthrough as reportable concentrations were found on the corresponding Tenax tube and > 75 ng was detected on each Tenax/charcoal tube. Considering the actual concentrations detected on the Tenax tubes, it is not believed that these results are indicative of actual breakthrough. However, all associated sample results for vinyl chloride should be considered estimated.

The 2-butanone results from C4bR2-Sets 2/3/4, meet the US EPA's definition of breakthrough as reportable concentrations were found on the corresponding Tenax tube and > 75 ng was detected on each Tenax/charcoal tube. Considering the actual concentrations detected on the Tenax tubes, it is not believed that these results are indicative of actual breakthrough. However, all associated sample results for 2-butanone should be considered estimated.

The chloroform results from C4bR2-Sets 1/2/3/4, meet the US EPA's definition of breakthrough as reportable concentrations were found on the corresponding Tenax tube and > 75 ng was detected on each Tenax/charcoal tube. Considering the actual concentrations detected on the Tenax tubes, it is not believed that these results are indicative of actual breakthrough. However, all associated sample results for chloroform should be considered estimated.

The carbon tetrachloride results from C4bR2-Sets 1/2/3/4, meet the US EPA's definition of breakthrough as reportable concentrations were found on the corresponding Tenax tube and > 75 ng was detected on each Tenax/charcoal tube. Considering the actual concentrations detected on the Tenax tubes, it is not believed that these results are indicative of actual breakthrough. However, all associated sample results for carbon tetrachloride should be considered estimated.

7.5.5 Volatile TOCs

Exhaust gases were sampled for volatile total organics IAW M0040. The following subsections discuss the volatile total organic analysis.

Instrument Calibration (Bag Analysis)

Requirements for instrument calibration were established to ensure the instrument was capable of producing acceptable qualitative and quantitative data for target compounds. ICAL demonstrates that the instrument is capable of producing a linear curve and continuing calibration demonstrates maintenance of the linear curve on a daily basis.

The field GC was calibrated on 08/09/11and all ICAL acceptance criteria of 5% RSD for RT and area responses were satisfied. A continuing calibration verification (CCV) was analyzed at the beginning of each analytical sequence with the exception of 08/09/11 where samples were analyzed after the initial calibration was completed. The acceptance criterion for CCV analysis is ± 10% for RT and area responses. All CCV analyses were within acceptance limits and qualification of the reported results is not indicated

LCS Results (Bag Analysis)

LCSs were analyzed to provide information on the accuracy of the analytical method and on laboratory performance. The CCV conducted at the beginning of each analytical sequence served as the LCS for each day with the exception of 08/09/11 where samples were analyzed after the initial calibration was completed. For 08/09/11, the mid-point standard analyses served as the LCS. The results of the LCSs are presented in Table 7-14. All LCS recoveries were within the acceptance limits and qualification of the sample results is not indicated.

Field Spike Results (Bag Analysis)

A field spike is a field-collected sample that is spiked with a known quantity of one (1) or more target analytes. The field spike provides information about the effect of each sample matrix on the analysis procedure. The results of the field spike are presented in Table 7-15. The field spike recovery was within the acceptance limits and qualification of the sample results is not indicated.

Field Blank Results (Bag Analysis)

Field blanks are Tedlar bags filled with nitrogen that are sampled in the same manner as a field sample. The blanks act as an indicator of contamination that may occur during field sampling. A daily field blank was collected IAW SAP/QAPP requirements.

For C4b, contamination was observed in each field blank that was collected. Methane (C_1), ethane (C_2), and hexane (C_6) was found in all field blanks. Propane (C_3) was found in the C4bR1 and C4bR2 field blanks. These analytes were found in all field samples. Field sample results are not corrected for field blank contamination. However, all reported C_1, C_2, C_3, and C_6 results should be considered estimated. It is noted that for all runs, C_6 was detected and has been reported to be a system contaminant. As previously noted, though field sample results are not corrected for field blank contamination, all reported C_6 sample results should be considered estimated.

Trip Blank Results (Bag Analysis)

A trip blank is a Tedlar bag that is filled with nitrogen in the field laboratory, carried to the sampling location, and returned to the field laboratory for analysis. Trip blanks were collected during each test condition and used to assess the existence and magnitude of contamination resulting from ambient conditions. C_1, C_2, C_3, and C_6 were detected in the trip blanks collected on 08/09/11 and 08/10/11. Field sample results are not corrected for trip blank contamination. However, all reported C_1, C_2, C_3, and C_6 sample results should be considered estimated.

Instrument Calibration (Condensate Analysis)

A multi-point calibration curve of pentane (C_5) through heptane (C_7) was prepared to determine an average RF factor for each carbon range. IAW the method requirements, C_4 is reported using the C_5 RF. A CCV and blank are analyzed every 10 samples. The CCV must be within 15% for the calibration to be valid. The continuing calibration and RT window criteria were met for the method.

Method Blank Results (Condensate Analysis)

A method blank was analyzed to determine the existence and magnitude of contamination resulting from laboratory activities. All method blank results were < RL and qualification of the results is not indicated.

Surrogate Standard Results (Condensate Analysis)

Laboratory performance on individual samples was established by means of spiking samples with known concentrations of selected compounds. All samples were spiked with n-octane as a surrogate compound prior to sample analysis.

Evaluation criteria for the surrogate include estimating sample results if the surrogate recovery is outside the acceptance limits provided the recovery is ≥ 10%. If the surrogate has < 10% recovery, sample results may be rejected. Surrogate recoveries are presented in Table 7-13. All objectives were met, and qualification of the data is not indicated.

LCS Results (Condensate Analysis)

LCSs were prepared in the laboratory by filling sample containers with reagent water spiked with known concentrations of selected compounds. A LCS was analyzed in duplicate to provide information on the accuracy of the analytical method and on laboratory performance. The results of the LCS are presented in Table 7-16. All objectives were met and qualification of the data is not indicated.

Field Blank Results (Condensate Analysis)

Condensate field blanks represent the collected reagent water rinse during recovery of each field blank. The blanks act as an indicator of contamination that may occur during field sampling. A daily field blank was collected resulting in one (1) field blank for each run of the performance test.

C5 contamination (0.026 ug) was observed in the C4bR5 field blank. Field samples are not corrected for field blank contamination. However, all reported C4bR5 sample results for the C_5 (30 to 60°C) boiling point range should be considered estimated.

Trip Blank Results (Condensate Analysis)

Trip blanks are sample vials filled with reagent water that are packaged with the field samples for shipment to the off-site laboratory. Trip blanks may be used to determine the existence and magnitude of contamination resulting from ambient conditions. For C4b, a condensate trip blank was not provided to the laboratory for analysis. Reported sample results are not impacted by this circumstance.

7.5.6 Acid Gases

During each run, a M26A sampling train was used to collect samples for the determination of acid gas emission levels. The samples were analyzed IAW procedures identified in the sampling and analysis method, M26A. Table 7-17 provides a summary of the dates each sample was collected and analyzed and demonstrates all holding time requirements were satisfied.

Instrument Calibration

Requirements for instrument calibration are established to ensure the instrument is capable of producing acceptable qualitative and quantitative data. ICAL demonstrates the instrument is capable of acceptable performance prior to sample analysis, and continuing calibration sample analyses verify that the ICAL is still valid.

The IC was calibrated IAW M26A, using a minimum of five (5) points for the ICAL. The correlation coefficient for chloride and fluoride were > 0.995 for each ICAL curve. Initial and continuing calibration verification sample results were within the acceptable control limits of 90 to 110% recovery.

Duplicate Injections

Duplicate injections of the samples were performed to ensure the precision of the reported result. The duplicate injections of each sample should be within 5% RPD when sample results are > 5X the RL. No field sample results were > 5X the RL and RPD was not evaluated.

It is noted that the matrix spikes were not analyzed in duplicate. No target analytes were found in any of the samples and the reported results are not impacted by this circumstance.

Method Blank Results

Laboratory (method) blank samples were analyzed to determine the existence and magnitude of contamination resulting from laboratory activities. No target analytes were detected at or above the MDL in any of the laboratory blanks. No qualification of samples was performed based on laboratory blank results.

Field and Reagent Blank Results

Reagent blanks are indicators of reagent contamination. Field blanks are indicators of reagent and ambient contamination that may have contaminated the sample. No target analytes were detected at or above the MDL in the field and reagent blanks.

LCS Results

LCSs were samples of known concentration that are prepared and analyzed along with the field samples. The LCSs were used to monitor the overall performance of the analysis process. The results of the LCS analyses are summarized in Table 7-18. All objectives were met, and qualification of the data was not necessary.

MS/MSD Results

The MS/MSD sample results provide information about the effect of each sample matrix on the analysis procedure. The MS/MSD results are summarized in Table 7-19. All objectives were met, and qualification of the data was not necessary.

7.5.7 Particulates

A M26A sampling train was used to collect samples for the determination of emission levels of particulates. The samples were analyzed for particulates gravimetrically IAW M5. QC measures included the use of Class-S weights to verify the accuracy of the analytical balance, the collection and analysis of blank samples, and replicate weighings of each sample collected.

All sample analyses were completed within the holding times specified in the SAP/QAPP. The balance calibration was verified prior to each use as required and replicate weighings were performed and meet QC requirements.

There was field blank contamination observed that would have biased the reported results. Particulate was present in both the field blank filter (0.0007 g) and solvent rinses (0.0008 g). Particulate was also present in the reagent blank filter (0.0003 g) and acetone (0.0005 g). All sample results should be considered estimated and may be biased high.

7.5.8 Trace Metals

During each run, a M29 sampling train was used to collect samples for the determination of emission levels of metals as indicated in the SAP. The analysis of the samples for mercury was performed IAW M7470A. All other metals analysis was performed IAW M6020. Instrument calibration and calibration verification for each method employed was performed IAW method requirements.

Instrument Tune

The ICP/MS instrument was tuned prior to each analytical sequence to ensure mass resolution, identification, and sensitivity. The results of each tune show that the ICP/MS achieved a mass

resolution of < 1.0 atomic mass units (amu) at 10% peak height and met the mass calibration of < 0.1 amu from the expected value.

Instrument Calibration

Instrument calibration was performed to ensure the instrument was capable of producing acceptable quantitative data. ICAL demonstrated that the instrument was capable of acceptable performance prior to sample analysis and continuing calibration sample analyses verified that the ICAL was still valid. As allowed by M6020, the instrument was periodically recalibrated during the run to ensure accurate quantitation of target analytes.

M6020, ICP/MS, was used for the analysis of aluminum, antimony, arsenic, barium, beryllium, boron, cadmium, chromium, cobalt, copper, lead, manganese, nickel, potassium, selenium, silver, thallium, tin, uranium, vanadium, and zinc. M7470A, CVAAS, was used for the determination of mercury. The ICP/MS and CVAAS were calibrated IAW M6020 and M7470A, respectively. Initial and continuing calibration verification sample results were within the acceptable control limits of 90 to 110% recovery for ICP/MS and 80 to 120% for CVAAS throughout the analysis of all exhaust gas samples.

Internal Standard Results

M6020 requires the use of internal standards. Internal standards were added to each sample analyzed by M6020. Internal standard intensities fell between 30 and 130% of the internal standard intensities in the first standard used during calibration. As the method allows the instrumented to be re-sloped during the course of a sequence, internal standard recoveries are calculated using the standard used for re-sloping, as applicable. Internal standard recoveries for each field sample met the recovery objectives.

Interference Check Samples

M6020 requires interference check samples (ICSs) to be analyzed at the beginning of each analytical sequence. Two (2) check sample solutions are run, an "A" solution (i.e., ICSA) containing only interfering elements at high concentrations and an "AB" solution (i.e., ICSAB), containing all analytes of interest including the interfering elements. The EPAs validation guidelines are written for a modified procedure that requires an additional ICS at the end of each analytical sequence. M6020 does not require an ending ICS analysis and the review criteria applied only considered the required ICS. It is noted that aluminum is present in the ICSA/ICSAB solutions at a concentration that is at the upper range of the instrument. As such, aluminum saturated the detector and a valid value is not reportable for several analyses. Interferences may still be assessed despite this circumstance. The ICS results were within ± 20% of the true value for all analytes in the ICS solutions for each run analyzed.

M7470A has no interference check sample requirements.

Method Blank Results

Method blanks were analyzed to determine the existence and magnitude of contamination resulting from laboratory handling of the samples. Method blank results for are summarized in

Table 7-20. No target elements were detected above the RL though there were instances where target metals were found between the RL and MDL. Qualification of the reported results is not indicated.

Field and Reagent Blank Results

Reagent blanks are indicators of the quality of the reagents used in the preparation and recovery of the sampling trains. Field blanks are indicators of reagent and ambient contamination that may have occurred in the field. The results of reagent and field blank are presented in Table 7-20.

M29 allows for correction of the field sample results for reagent blank contribution. However, the field sample results were not corrected for reagent blank metals content, which allows for reporting the most conservative metals emissions data. Reported "total catch" results should be considered biased high for those metals identified in Table 7-20 that were found in the field and reagent blanks.

LCS Results

LCSs are samples of known concentration that were prepared and analyzed along with the field samples. The LCSs were used to monitor the overall performance of the preparation and analysis process. The results of the LCSs are summarized in Table 7-21. All objectives were met and qualification of the data was not necessary.

It is noted that while the SAPP/QAPP requires an LCS to be performed, the laboratory prepared and analyzed an LCS and LCSD with the front-half fraction. Results of the LCS/LCSD for the front-half fraction have been included in this report.

MS/MSD Results

The MS/MSD sample results provide information about the effect of each sample matrix on the preparation and analysis procedure. For the M29 sampling train, the MS/MSDs are post-digestion spike/post-digestion spike duplicates for the front- and back-half fractions of the sampling train as the sample cannot be split and separate aliquots spiked prior to sample preparation. Only the back-half mercury fraction has an MS/MSD that is prepared by spiking sample aliquots prior to digestion. The MS/MSD results are summarized in Table 7-22.

All MS/MSD recoveries and RPDs were within acceptance limits and qualification of the reported sample results is not indicated.

Serial Dilution Results

Serial dilution, or dilution test, is required by M6020 and is used to determine whether significant physical or chemical interferences exist attributable to sample matrix. If the analyte concentration is 100 times (100X) greater than the concentration in the MDL the serial dilution results should be within 10% of the original determination. The laboratory conducted serial dilution analysis with each analytical batch per instrument as required.

All serial dilution results were within acceptance limits with the exception of copper (15.3%) and zinc (10.9%) in the back-half fraction serial dilution. All front-half fraction copper and zinc results are > 50 times (50X) the MDL and should be considered estimated with the exception of the C4bR5 zinc result (it is < 50X the MDL) which should not be qualified.

7.5.9 Energetics

Exhaust gases were sampled for energetic compounds using the MM5E. The laboratory provided preloaded and surrogate spiked (3,4-dinitrotoluene) XAD traps, and the impinger fraction of the sampling train was spiked by URS-Austin prior to sampling with surrogate. Following any necessary extraction, the sampling train components were analyzed for energetic compounds using M8330, HPLC. Table 7-23 provides a summary of the dates each sample was prepared and analyzed and demonstrates all holding time requirements were satisfied. The following subsections discuss the energetic analysis.

Instrument Calibration

Instrument calibration was performed to ensure that the instrument was capable of producing acceptable quantitative data. ICAL demonstrates that the instrument is capable of acceptable performance prior to sample analysis, and continuing calibration sample analyses verify that the ICAL is still valid. Instrument calibration met all acceptance criteria.

Surrogate Standard Results

Laboratory performance on individual samples was established by field spiking impinger and XAD samples with known concentrations of 3,4-dinitrotoluene. No further surrogate spiking was performed in the laboratory for the field samples. The method blanks, LCSs, and LCSDs associated with the impinger and XAD fractions were spiked with equivalent concentrations of 3,4-dintrotoluene prior to extraction at the laboratory.

Evaluation criteria for the surrogate include estimating sample results when any surrogate has a recovery ≥ 10%, but below the lower QC limit. If any surrogate has < 10% recovery reported, concentrations may be rejected. Surrogate recoveries are presented in Table 7-23. The reported surrogate recoveries for the XAD fraction represent the combined recovery from all extractions performed. All recovery objectives were met, and qualification of the data is not indicated.

Method Blank Results

A method blank was prepared and analyzed along with the field samples to determine the existence and magnitude of contamination resulting from laboratory activities. The method blank results also reflect the background level of artifacts present in the resin. No target analytes were detected in any of the method blanks and qualification of the data is not indicated.

Field Blank Results

Field blanks are indicators of ambient and sample handling contamination. A field blank was collected by setting up a sampling train, bringing the train to the sampling location, heating the

train, and performing leak checks. The field blank is recovered in the same manner as the field samples. No target analytes were detected in any field blank fraction.

Reagent Blank Results

Reagent blanks are indicators of the cleanliness of the reagents and materials used in the field. Reagent blanks were collected that included the filter, solvent, and reagent water. No target analytes were detected in any of the reagent blanks samples.

Trip Blank Results

Trip blanks are indicators of ambient and sample handling contamination introduced during shipping of the samples. A trip blank consisting of a resin trap was shipped with the samples to the laboratory and analyzed. No target analytes were detected in the trip blank samples.

LCS Results

LCSs were analyzed to provide information on the accuracy of the analytical method and on laboratory performance. The results of the LCSs are presented in Table 7-24. All objectives were met for all fractions and qualification of the data is not indicated.

7.5.10 Mustard

A DRE DAAMS was used to collect a sample for the determination of emission levels of HD agent. The DRE DAAMS samples collected during each run of C4b were analyzed IAW a site-specific procedures.

QC measures included the use of quality laboratory (QL) and QP samples. QL samples are sample tubes that are spiked with a known quantity of mustard and used to verify the initial calibration on a daily basis. QP samples are sample tubes that are spiked with the mustard prior to sampling, loaded into the sampling array, and aspirated for the same amount of time as the DRE sample tube. The results were reported, reviewed, and validated in accordance with the approved ANCDF SDC Emissions Test Plan requirements. The mustard DRE DAAMS data report is provided in Appendix G.

The sampling data and laboratory reports have been reviewed and validated by designated ANCDF personnel. All sample analyses were completed within the required holding time.

The QL samples analyzed at the beginning and end of each analytical sequence meet the site specific procedure requirements.

The QP samples aspirated with C4bR1, C4bR4, and C4bR5 yielded percent recoveries that were within acceptance limits. A QP was not aspirated with the C4bR2 samples and recovery data is not available. No HD agent was found in the C4bR2 samples, or any of the C4b samples. Despite the C4bR2 sample results being consistent with the sample results obtained during the other test runs (e.g., agent was not detected and each chromatogram displayed similar non-agent artifacts), the C4bR2 results should be considered estimated. A summary table presented in Appendix G lists QP recoveries by sample as reported by the laboratory.

7.6 CONCLUSIONS

7.6.1 Comparability of Analytical Data

IAW the ANCDF SDC Emissions Test Plan, standardized methodologies (e.g., approved US EPA sample collection procedures and site specific procedures) were employed to collect samples and generate data in common units. Samples were analyzed using the US EPA approved procedures described in the ANCDF SDC Emissions Test Plan. For this reason, ANCDF considers the results generated during this test to be comparable to other results collected using the same methodologies and procedures.

7.6.2 Representativeness of Analytical Data

Based on a review of the sampling and analysis results, ANCDF considers the exhaust gas sample results to be representative. The exhaust gas sampling locations met US EPA specifications for distance from flow disturbances and absence of cyclonic flow was demonstrated at the isokinetic sampling locations. Approved US EPA sampling methods were used to collect all exhaust gas samples and the analytical procedures specified in the ANCDF SDC Emissions Test Plan were employed in their analysis.

7.6.3 Completeness of Analytical Data

The ANCDF SDC Emissions Test Plan identified obtaining a minimum of three (3) complete exhaust gas sample sets the critical measurement. Based on a review of the sampling and analysis results ANCDF considers the exhaust gas sample results to be complete. Exhaust gas samples from a minimum of three (3) test runs were collected and analyzed. No field samples were wholly rejected or flagged as unusable during the data validation process.

On an individual analyte basis, there were a total of 3,078 individual analytes planned to be reported for the field samples collected from C4bR1, C4bR4, and C4bR5. None of the 3,078 individual analytes were reported to be unusable. With all 3,078 individual analytes reported to be usable, this represents a completeness of 100%.

7.6.4 Analytical Data Usability

The analytical data generated from the C4b field samples is valid and considered usable for their intended purposes. Results qualified as estimated can be used as long as the limitations of the results are understood.

Table 7-1: Field and Laboratory Sample Identification Cross Reference Guide

Laboratory Sample No.	Field Sample No.	Test Run No.	Sampling Date	Analytical Testing Parameters									
				Semivolatile Organics	Semivolatile Unspeciated and Gravimetric Organics	Dioxins/Furans	Volatile Organics	Volatile Unspeciated Organics	Hydrogen Chloride/Fluoride	Total Chlorine	Particulates	Trace Metals	Energetics
G1H140412-001	SDC-M4B-1-M0010-SEMIS-FH	C4bR1	08/09/11	X									
G1H140412-002	SDC-M4B-1-M0010-SEMIS-BH	C4bR1	08/09/11	X									
G1H140412-003	SDC-M4B-1-M0010-SEMIS-COND	C4bR1	08/09/11	X									
G1H140412-004	SDC-M4B-2-M0010-SEMIS-FH	C4bR2	08/10/11	X									
G1H140412-005	SDC-M4B-2-M0010-SEMIS-BH	C4bR2	08/10/11	X									
G1H140412-006	SDC-M4B-2-M0010-SEMIS-COND	C4bR2	08/10/11	X									
G1H140412-007	SDC-M4B-4-M0010-SEMIS-FH	C4bR4	08/12/11	X									
G1H140412-008	SDC-M4B-4-M0010-SEMIS-BH	C4bR4	08/12/11	X									
G1H140412-009	SDC-M4B-4-M0010-SEMIS-COND	C4bR4	08/12/11	X									
G1H140412-010	SDC-M4B-5-M0010-SEMIS-FH	C4bR5	08/13/11	X									
G1H140412-011	SDC-M4B-5-M0010-SEMIS-BH	C4bR5	08/13/11	X									
G1H140412-012	SDC-M4B-5-M0010-SEMIS-COND	C4bR5	08/13/11	X									
G1H140412-013	SDC-M4B-FB-M0010-SEMIS-FH	---	08/08/11	X									
G1H140412-014	SDC-M4B-FB-M0010-SEMIS-BH	---	08/08/11	X									
G1H140412-015	SDC-M4B-FB-M0010-SEMIS-IMPINGER RINSE	---	08/08/11	X									
G1H140412-016	SDC-M4B-RB-M0010-SEMIS-FILTER	---	08/10/11	X									
G1H140412-017	SDC-M4B-RB-M0010-SEMIS-XAD	---	08/10/11	X									
G1H140412-018	SDC-M4B-RB-M0010-SEMIS-MECL/MEOH	---	08/10/11	X									
G1H140412-019	SDC-M4B-RB-M0010-SEMIS-WATER	---	08/10/11	X									
G1H140412-020	SDC-M4B-TB-M0010-SEMIS-XAD	---	08/10/11	X									
H1H140409-001	SDC-M4B-1-M0010-TOE-COMBINED	C4bR1	08/09/11		X								
H1H140409-002	SDC-M4B-2-M0010-TOE-COMBINED	C4bR2	08/10/11		X								

Table 7-1: Field and Laboratory Sample Identification Cross Reference Guide (Continued)

Laboratory Sample No.	Field Sample No.	Test Run No.	Sampling Date	Analytical Testing Parameters									
				Semivolatile Organics	Semivolatile Unspeciated and Gravimetric Organics	Dioxins/Furans	Volatile Organics	Volatile Unspeciated Organics	Hydrogen Chloride/Fluoride	Total Chlorine	Particulates	Trace Metals	Energetics
H1H140409-004	SDC-M4B-4-M0010-TOE-COMBINED	C4bR4	08/12/11		X								
H1H140409-005	SDC-M4B-5-M0010-TOE-COMBINED	C4bR5	08/13/11		X								
H1H140409-006	SDC-M4B-FB-M0010-TOE-COMBINED	---	08/08/11		X								
H1H140409-007	SDC-M4B-RB-M0010-TOE-COMBINED	---	08/10/11		X								
H1H140409-008	SDC-M4B-TB-M0010-TOE-XAD	---	08/10/11		X								
G1H140411-001	SDC-M4B-1-M0023A-FH	C4bR1	08/09/11			X							
G1H140411-002	SDC-M4B-1-M0023A-BH	C4bR1	08/09/11			X							
G1H140411-003	SDC-M4B-2-M0023A-FH	C4bR2	08/10/11			X							
G1H140411-004	SDC-M4B-2-M0023A-BH	C4bR2	08/10/11			X							
G1H140411-005	SDC-M4B-4-M0023A-FH	C4bR4	08/12/11			X							
G1H140411-006	SDC-M4B-4-M0023A-BH	C4bR4	08/12/11			X							
G1H140411-007	SDC-M4B-5-M0023A-FH	C4bR5	08/13/11			X							
G1H140411-008	SDC-M4B-5-M0023A-BH	C4bR5	08/13/11			X							
G1H140411-009	SDC-M4B-FB-M0023A-FH	---	08/08/11			X							
G1H140411-010	SDC-M4B-FB-M0023A-BH	---	08/08/11			X							
G1H140411-011	SDC-M4B-RB-M0023A-FILTER	---	08/10/11			X							
G1H140411-012	SDC-M4B-RB-M0023A-XAD	---	08/10/11			X							
G1H140411-013	SDC-M4B-RB-M0023A-MECL,TOL,ACE	---	08/10/11			X							
G1H140411-014	SDC-M4B-TB-M0023A-XAD	---	08/10/11			X							
H1H150402-001	SDC-M4B-1-M0030-T1	C4bR1	08/09/11				X						
H1H150402-002	SDC-M4B-1-M0030-TC1	C4bR1	08/09/11				X						
H1H150402-003	SDC-M4B-1-M0030-T2	C4bR1	08/09/11				X						

Table 7-1: Field and Laboratory Sample Identification Cross Reference Guide (Continued)

Laboratory Sample No.	Field Sample No.	Test Run No.	Sampling Date	Analytical Testing Parameters									
				Semivolatile Organics	Semivolatile Unspeciated and Gravimetric Organics	Dioxins/Furans	Volatile Organics	Volatile Unspeciated Organics	Hydrogen Chloride/Fluoride	Total Chlorine	Particulates	Trace Metals	Energetics
H1H150402-004	SDC-M4B-1-M0030-TC2	C4bR1	08/09/11				X						
H1H150402-005	SDC-M4B-1-M0030-T3	C4bR1	08/09/11				X						
H1H150402-006	SDC-M4B-1-M0030-TC3	C4bR1	08/09/11				X						
H1H150402-007	SDC-M4B-1-M0030-T4	C4bR1	08/09/11				X						
H1H150402-008	SDC-M4B-1-M0030-TC4	C4bR1	08/09/11				X						
H1H150402-009	SDC-M4B-1-M0030-T BK	---	08/09/11				X						
H1H150402-010	SDC-M4B-1-M0030-TC BK	---	08/09/11				X						
H1H150402-011	SDC-M4B-1-M0030-COND	C4bR1	08/09/11				X						
H1H150402-012	SDC-M4B-1-M0030-COND BK	---	08/09/11				X						
H1H150402-013	SDC-M4B-2-M0030-T1	C4bR2	08/10/11				X						
H1H150402-014	SDC-M4B-2-M0030-TC1	C4bR2	08/10/11				X						
H1H150402-015	SDC-M4B-2-M0030-T2	C4bR2	08/10/11				X						
H1H150402-016	SDC-M4B-2-M0030-TC2	C4bR2	08/10/11				X						
H1H150402-017	SDC-M4B-2-M0030-T3	C4bR2	08/10/11				X						
H1H150402-018	SDC-M4B-2-M0030-TC3	C4bR2	08/10/11				X						
H1H150402-019	SDC-M4B-2-M0030-T4	C4bR2	08/10/11				X						
H1H150402-020	SDC-M4B-2-M0030-TC4	C4bR2	08/10/11				X						
H1H150402-021	SDC-M4B-2-M0030-T BK	---	08/10/11				X						
H1H150402-022	SDC-M4B-2-M0030-TC BK	---	08/10/11				X						
H1H150402-023	SDC-M4B-2-M0030-COND	C4bR2	08/10/11				X						
H1H150402-035	SDC-M4B-4-M0030-T1	C4bR4	08/12/11				X						
H1H150402-036	SDC-M4B-4-M0030-TC1	C4bR4	08/12/11				X						

Table 7-1: Field and Laboratory Sample Identification Cross Reference Guide (Continued)

Laboratory Sample No.	Field Sample No.	Test Run No.	Sampling Date	Analytical Testing Parameters									
				Semivolatile Organics	Semivolatile Unspeciated and Gravimetric Organics	Dioxins/Furans	Volatile Organics	Volatile Unspeciated Organics	Hydrogen Chloride/Fluoride	Total Chlorine	Particulates	Trace Metals	Energetics
H1H150402-037	SDC-M4B-4-M0030-T2	C4bR4	08/12/11				X						
H1H150402-038	SDC-M4B-4-M0030-TC2	C4bR4	08/12/11				X						
H1H150402-039	SDC-M4B-4-M0030-T3	C4bR4	08/12/11				X						
H1H150402-040	SDC-M4B-4-M0030-TC3	C4bR4	08/12/11				X						
H1H150402-041	SDC-M4B-4-M0030-T4	C4bR4	08/12/11				X						
H1H150402-042	SDC-M4B-4-M0030-TC4	C4bR4	08/12/11				X						
H1H150402-043	SDC-M4B-4-M0030-T BK	---	08/12/11				X						
H1H150402-044	SDC-M4B-4-M0030-TC BK	---	08/12/11				X						
H1H150402-045	SDC-M4B-4-M0030-COND	C4bR4	08/12/11				X						
H1H150402-046	SDC-M4B-5-M0030-T1	C4bR5	08/13/11				X						
H1H150402-047	SDC-M4B-5-M0030-TC1	C4bR5	08/13/11				X						
H1H150402-048	SDC-M4B-5-M0030-T2	C4bR5	08/13/11				X						
H1H150402-049	SDC-M4B-5-M0030-TC2	C4bR5	08/13/11				X						
H1H150402-050	SDC-M4B-5-M0030-T3	C4bR5	08/13/11				X						
H1H150402-051	SDC-M4B-5-M0030-TC3	C4bR5	08/13/11				X						
H1H150402-052	SDC-M4B-5-M0030-T4	C4bR5	08/13/11				X						
H1H150402-053	SDC-M4B-5-M0030-TC4	C4bR5	08/13/11				X						
H1H150402-054	SDC-M4B-5-M0030-T BK	---	08/13/11				X						
H1H150402-055	SDC-M4B-5-M0030-TC BK	---	08/13/11				X						
H1H150402-056	SDC-M4B-5-M0030-COND	C4bR5	08/13/11				X						
H1H150402-057	SDC-M4B-TB-M0030-T1	---	08/13/11				X						
H1H150402-058	SDC-M4A-TB-M0030-TC1	---	08/13/11				X						

Table 7-1: Field and Laboratory Sample Identification Cross Reference Guide (Continued)

Laboratory Sample No.	Field Sample No.	Test Run No.	Sampling Date	Analytical Testing Parameters									
				Semivolatile Organics	Semivolatile Unspeciated and Gravimetric Organics	Dioxins/Furans	Volatile Organics	Volatile Unspeciated Organics	Hydrogen Chloride/Fluoride	Total Chlorine	Particulates	Trace Metals	Energetics
H1H150401-001	SDC-M4B-1A-M0040-TOE-COND	C4bR1	08/09/11					X					
H1H150401-002	SDC-M4B-1B-M0040-TOE-COND	C4bR1	08/09/11					X					
H1H150401-003	SDC-M4B-1FB-M0040-TOE-COND	C4bR1	08/09/11					X					
H1H150401-004	SDC-M4B-2A-M0040-TOE-COND	C4bR2	08/10/11					X					
H1H150401-005	SDC-M4B-2B-M0040-TOE-COND	C4bR2	08/10/11					X					
H1H150401-006	SDC-M4B-2FB-M0040-TOE-COND	C4bR2	08/10/11					X					
H1H150401-010	SDC-M4B-4A-M0040-TOE-COND	C4bR4	08/12/11					X					
H1H150401-011	SDC-M4B-4B-M0040-TOE-COND	C4bR4	08/12/11					X					
H1H150401-012	SDC-M4B-4FB-M0040-TOE-COND	C4bR4	08/12/11					X					
H1H150401-013	SDC-M4B-5A-M0040-TOE-COND	C4bR5	08/13/11					X					
H1H150401-014	SDC-M4B-5B-M0040-TOE-COND	C4bR5	08/13/11					X					
H1H150401-015	SDC-M4B-5FB-M0040-TOE-COND	C4bR5	08/13/11					X					
G1H140414-001	SDC-M4B-1-M5/26A-PNR	C4bR1	08/09/11								X		
G1H140414-002	SDC-M4B-1-M5/M26A-FILT	C4bR1	08/09/11								X		
G1H140414-003	SDC-M4B-1-M5/26A-ACDIMP	C4bR1	08/09/11						X				
G1H140414-004	SDC-M4B-1-M5/26A-ALKIMP	C4bR1	08/09/11							X			
G1H140414-005	SDC-M4B-2-M5/26A-PNR	C4bR2	08/10/11								X		
G1H140414-006	SDC-M4B-2-M5/M26A-FILT	C4bR2	08/10/11								X		
G1H140414-007	SDC-M4B-2-M5/26A-ACDIMP	C4bR2	08/10/11						X				
G1H140414-008	SDC-M4B-2-M5/26A-ALKIMP	C4bR2	08/10/11							X			
G1H140414-009	SDC-M4B-4-M5/26A-PNR	C4bR4	08/12/11								X		
G1H140414-010	SDC-M4B-4-M5/26A-FILT	C4bR4	08/12/11								X		

Table 7-1: Field and Laboratory Sample Identification Cross Reference Guide (Continued)

Laboratory Sample No.	Field Sample No.	Test Run No.	Sampling Date	Analytical Testing Parameters									
				Semivolatile Organics	Semivolatile Unspeciated and Gravimetric Organics	Dioxins/Furans	Volatile Organics	Volatile Unspeciated Organics	Hydrogen Chloride/Fluoride	Total Chlorine	Particulates	Trace Metals	Energetics
G1H140414-011	SDC-M4B-4-M5/26A-ACDIMP	C4bR4	08/12/11						X				
G1H140414-012	SDC-M4B-4-M5/26A-ALKIMP	C4bR4	08/12/11							X			
G1H140414-013	SDC-M4B-5-M5/26A-PNR	C4bR5	08/13/11								X		
G1H140414-014	SDC-M4B-5-M5/26A-FILT	C4bR5	08/13/11								X		
G1H140414-015	SDC-M4B-5-M5/26A-ACDIMP	C4bR5	08/13/11						X				
G1H140414-016	SDC-M4B-5-M5/26A-ALKIMP	C4bR5	08/13/11							X			
G1H140414-017	SDC-M4B-FB-M5/26A-PNR	---	08/08/11								X		
G1H140414-018	SDC-M4B-FB-M5/26A-FILT	---	08/08/11								X		
G1H140414-019	SDC-M4B-FB-M5/26A-ACDIMPA	---	08/08/11						X				
G1H140414-020	SDC-M4B-FB-M5/26A-ALKIMP	---	08/08/11							X			
G1H140414-021	SDC-M4B-RB-M5/26A-ACE	---	08/10/11								X		
G1H140414-022	SDC-M4B-RB-M5/26A-FILT	---	08/10/11								X		
G1H140414-023	SDC-M4B-RB-M5/26A-ACDIMP	---	08/10/11						X				
G1H140414-024	SDC-M4B-RB-M5/26A-ALKIMP	---	08/10/11							X			
G1H140414-014	SDC-M4B-RB-M5/26A-WATER	---	08/10/11						X				
G1H140413-001	SDC-M4B-1-M29-FH	C4bR1	08/09/11									X	
G1H140413-002	SDC-M4B-1-M29-BH	C4bR1	08/09/11									X	
G1H140413-003	SDC-M4B-2-M29-FH	C4bR2	08/10/411									X	
G1H140413-004	SDC-M4B-2-M29-BH	C4bR2	08/10/411									X	
G1H140413-005	SDC-M4B-4-M29-FH	C4bR4	08/12/11									X	
G1H140413-006	SDC-M4B-4-M29-BH	C4bR4	08/12/11									X	
G1H140413-007	SDC-M4B-5-M29-FH	C4bR5	08/13/11									X	

Table 7-1: Field and Laboratory Sample Identification Cross Reference Guide (Continued)

Laboratory Sample No.	Field Sample No.	Test Run No.	Sampling Date	Analytical Testing Parameters									
				Semivolatile Organics	Semivolatile Unspeciated and Gravimetric Organics	Dioxins/Furans	Volatile Organics	Volatile Unspeciated Organics	Hydrogen Chloride/Fluoride	Total Chlorine	Particulates	Trace Metals	Energetics
G1H140413-008	SDC-M4B-5-M29-BH	C4bR5	08/13/11									X	
G1H140413-009	SDC-M4B-FB-M29-FH	---	08/08/11									X	
G1H140413-010	SDC-M4B-FB-M29-BH	---	08/08/11									X	
G1H140413-011	SDC-M4B-RB-M29-FH	---	08/10/11									X	
G1H140413-012	SDC-M4B-RB-M29-BH	---	08/10/11									X	
G1H140140-001	SDC-M4B-1-MM5E-PNR/FILT	C4bR1	08/09/11										X
G1H140140-002	SDC-M4B-1-MM5E-XAD-TOP	C4bR1	08/09/11										X
G1H140140-004	SDC-M4B-1-MM5E-COND	C4bR1	08/09/11										X
G1H140140-005	SDC-M4B-2-MM5E-PNR/FILT	C4bR2	08/10/11										X
G1H140140-006	SDC-M4B-2-MM5E-XAD-TOP	C4bR2	08/10/11										X
G1H140140-008	SDC-M4B-2-MM5E-COND	C4bR2	08/10/11										X
G1H140140-009	SDC-M4B-4-MM5E-PNR/FILT	C4bR4	08/12/11										X
G1H140140-010	SDC-M4B-4-MM5E-XAD-TOP	C4bR4	08/12/11										X
G1H140140-012	SDC-M4B-4-MM5E-COND	C4bR4	08/12/11										X
G1H140140-013	SDC-M4B-5-MM5E-PNR/FILT	C4bR5	08/13/11										X
G1H140140-014	SDC-M4B-5-MM5E-XAD-TOP	C4bR5	08/13/11										X
G1H140140-016	SDC-M4B-5-MM5E-COND	C4bR5	08/13/11										X
G1H140140-017	SDC-M4B-FB-MM5E-PNR/FILT	---	08/11/11										X
G1H140140-018	SDC-M4B-FB-MM5E-XAD-TOP	---	08/11/11										X
G1H140140-020	SDC-M4B-FB-MM5E-COND	---	08/11/11										X
G1H140140-021	SDC-M4B-RB-MM5E-PNR/FILT	---	08/10/11										X
G1H140140-022	SDC-M4B-RB-MM5E-XAD-TOP	---	08/10/11										X

Table 7-1: Field and Laboratory Sample Identification Cross Reference Guide (Continued)

Laboratory Sample No.	Field Sample No.	Test Run No.	Sampling Date	Analytical Testing Parameters									
				Semivolatile Organics	Semivolatile Unspeciated and Gravimetric Organics	Dioxins/Furans	Volatile Organics	Volatile Unspeciated Organics	Hydrogen Chloride/Fluoride	Total Chlorine	Particulates	Trace Metals	Energetics
G1H140140-024	SDC-M4B-RB-MM5E-COND	---	08/10/11										X
G1H140140-025	SDC-M4B-TB-MM5E-XAD-TOP	---	08/10/11										X

Table 7-2: Leak Checks

Run	Sample Train	Initial		Port Change				Final	
		VAC (inHg)	Rate (cf)	VAC (inHg)	Rate (cf)	VAC (inHg)	Rate (cf)	VAC (inHg)	Rate (cf)
C4bR1	M0010	15	0.005	11	0.006	11	0.005	15	0.000
	M0010-TOC	15	0.002	13	0.004	13	0.004	15	0.005
	M0023A	15	0.008	11	0.006	11	0.005	12	0.005
	M26A	15	0.006	10	0.002	10	0.004	11	0.003
	M29	11	0.002	12	0.002	12	0.002	12	0.002
	MM5E	15	0.006	14	0.006	14	0.008	13	0.005
C4bR4	M0010	15	0.002	12	0.001	12	0.003	11	0.001
	M0010-TOC	17	0.003	10	0.000	10	0.0025	13	0.005
	M0023A	16	0.008	12	0.006	13	0.006	12	0.003
	M26A	16	0.0025	7	0.003	5.5	0.001	7	0.000
	M29	16	0.0025	12	0.003	12	0.004	13	0.003
	MM5E	15	0.005	12	0.004	10	0.004	12	0.005
C4bR5	M0010	15	0.005	11	0.003	11	0.003	11	0.004
	M0010-TOC	15	0.003	8	0.004	11	0.005	13	0.003
	M0023A	15	0.006	11	0.003	16	0.004	9	0.003
	M26A	15	0.003	7	0.002	13	0.004	5	0.003
	M29	16	0.004	13	0.004	13	0.005	13	0.004
	MM5E	15	0.003	12	0.003	10	0.003	15	0.004

Table 7-3: Semivolatile Organic Sample Holding Time Summary

Sample Name	Sample Date	Preparation Date	Analysis Date	Collection to Extraction (Days)	Extraction to Analysis (Days)
SDC-M4B-1-M0010-SEMIS-FH	08/09/11	08/15/11	08/18/11	6	3
SDC-M4B-1-M0010-SEMIS-BH	08/09/11	08/15/11	08/18/11	6	3
SDC-M4B-1-M0010-SEMIS-COND	08/09/11	08/16/11	08/17/11	7	1
SDC-M4B-2-M0010-SEMIS-FH	08/10/11	08/15/11	08/18/11	5	3
SDC-M4B-2-M0010-SEMIS-BH	08/10/11	08/15/11	08/18/11	5	3
SDC-M4B-2-M0010-SEMIS-COND	08/10/11	08/16/11	08/17/11	6	1
SDC-M4B-4-M0010-SEMIS-FH	08/12/11	08/15/11	08/18/11	3	3
SDC-M4B-4-M0010-SEMIS-BH	08/12/11	08/15/11	08/18/11	3	3
SDC-M4B-4-M0010-SEMIS-COND	08/12/11	08/16/11	08/18/11	4	2
SDC-M4B-5-M0010-SEMIS-FH	08/13/11	08/15/11	08/18/11	2	3
SDC-M4B-5-M0010-SEMIS-BH	08/13/11	08/15/11	08/18/11	2	3
SDC-M4B-5-M0010-SEMIS-COND	08/13/11	08/16/11	08/18/11	3	2
SDC-M4B-FB-M0010-SEMIS-FH	08/08/11	08/15/11	08/18/11	7	3
SDC-M4B-FB-M0010-SEMIS-BH	08/08/11	08/15/11	08/18/11	7	3
SDC-M4B-FB-M0010-SEMIS-CONDENSER RINSE	08/08/11	08/16/11	08/18/11	8	2
SDC-M4B-RB-M0010-SEMIS-FILT	08/10/11	08/15/11	08/18/11	5	3
SDC-M4B-RB-M0010-SEMIS-XAD	08/10/11	08/15/11	08/18/11	5	3
SDC-M4B-RB-M0010-SEMIS-MECL/MEOH	08/10/11	08/16/11	08/18/11	6	2
SDC-M4B-RB-M0010-SEMIS-WATER	08/10/11	08/16/11	08/18/11	6	2
SDC-M4B-TB-M0010-SEMIS-XAD	08/10/11	08/15/11	08/18/11	5	3
INTRA-LAB BLANK (MLNM71AA)	---	08/15/11	08/18/11	---	3
INTRA-LAB BLANK (MLNM71AE)	---	08/15/11	08/18/11	---	3
INTRA-LAB BLANK (MLNNJ1AA)	---	08/16/11	08/17/11	---	1
CHECK SAMPLE (MLNM71AC)	---	08/15/11	08/18/11	---	3
DUPLICATE CHECK (MLNM71AD)	---	08/15/11	08/18/11	---	3
CHECK SAMPLE (MLNNJ1AC)	---	08/16/11	08/17/11	---	1
DUPLICATE CHECK (MLNNJ1AD)	---	08/16/11	08/17/11	---	1

SAP/QAPP Limit: 14 days from collection to extraction and 40 days from extraction to analysis

Table 7-4: Semivolatile Surrogate Standard Results

Sample Name	1,2-Dichlorobenzen$D\text{-}d_4$	2-Fluorobiphenyl	2-Fluorophenol	Nitrobenzen$D\text{-}d_5$	Phenol-d_5	Terphenyl-d_{14}	2,4,6-Tribromophenol
	SAP/QAPP Limit (%)						
	10-136	35-122	10-108	15-118	10-121	35-120	10-154
SDC-M4B-1-M0010-SEMIS-FH	---	66	62	64	69	85	91
SDC-M4B-1-M0010-SEMIS-BH	58	71	62	64	71	85	96
SDC-M4B-1-M0010-SEMIS-COND	---	56	39	52	30	90	97
SDC-M4B-2-M0010-SEMIS-FH	---	71	65	68	71	87	82
SDC-M4B-2-M0010-SEMIS-BH	56	70	60	65	68	83	97
SDC-M4B-2-M0010-SEMIS-COND	---	65	43	61	33	93	99
SDC-M4B-4-M0010-SEMIS-FH	---	72	59	68	73	86	64
SDC-M4B-4-M0010-SEMIS-BH	61	74	64	67	74	88	95
SDC-M4B-4-M0010-SEMIS-COND	---	54	36	51	24	86	94
SDC-M4B-5-M0010-SEMIS-FH	---	65	61	63	67	85	84
SDC-M4B-5-M0010-SEMIS-BH	54	73	58	66	68	88	101
SDC-M4B-5-M0010-SEMIS-COND	---	54	38	52	27	88	93
SDC-M4B-FB-M0010-SEMIS-FH	---	71	67	69	77	88	83
SDC-M4B-FB-M0010-SEMIS-BH	52	75	58	65	68	89	93
SDC-M4B-FB-M0010-SEMIS-CONDENSER RINSE	---	71	46	69	31	89	89
SDC-M4B-RB-M0010-SEMIS-FILT	---	62	61	60	66	89	93
SDC-M4B-RB-M0010-SEMIS-XAD	48	66	53	55	60	87	98
SDC-M4B-RB-M0010-SEMIS-MECL/MEOH	---	79	56	78	39	89	93
SDC-M4B-RB-M0010-SEMIS-WATER	---	79	46	76	29	88	94
SDC-M4B-TB-M0010-SEMIS-XAD	52	75	58	61	68	92	101
INTRA-LAB BLANK (MLNM71AA)	---	66	64	63	69	85	92
INTRA-LAB BLANK (MLNM71AE)	53	71	54	62	65	88	99
INTRA-LAB BLANK (MLNNJ1AA)	---	63	40	66	25	88	84
CHECK SAMPLE (MLNM71AC)	---	79	68	72	78	85	103
DUPLICATE CHECK (MLNM71AD)	---	82	69	72	81	88	104
CHECK SAMPLE (MLNNJ1AC)	---	83	56	81	36	86	104
DUPLICATE CHECK (MLNNJ1AD)	---	79	46	71	31	91	101

Note: 1,2-Dichlorobenzene-d_4 is a field surrogate that is only added to the resin trap. As such, only back-half sample fractions have a recovery reported for this surrogate.

Table 7-5: Semivolatile LCS Results

Spiked Compound	Concentration (ug)			Recovery (%)		RPD	SAP/QAPP Limits (%)	
	True	LCS	LCSD	LCS	LCSD	(%)	Recovery	RPD
Laboratory ID:	G1H150000197C/G1H150000197L							
Acenaphthene	100	77.9	80.1	78	80	2.8	57 - 113	35
4-Chloro-3-methylphenol	100	90.2	90.2	90	90	0.02	42 - 126	35
2-Chlorophenol	100	65.4	66.4	65	66	1.5	52 - 110	35
1,4-Dichlorobenzene	100	59.7	59.6	60	60	0.13	50 - 108	35
2,4-Dinitrotoluene	100	97.3	98.3	97	98	1.1	62 - 113	35
4-Nitrophenol	100	95.8	95.1	96	95	0.75	10 - 145	35
N-Nitrosodi-n-propylamine	100	71.6	74.1	72	74	3.5	46 - 123	35
Pentachlorophenol	100	105	105	105	105	0.28	11 - 135	35
Phenol	100	80.6	80.4	81	80	0.21	20 - 119	35
Pyrene	100	85.8	89.6	86	90	4.4	47 - 155	35
1,2,4-Trichlorobenzene	100	67.2	66	67	66	1.8	49 - 112	35
Laboratory ID:	G1H150000200C/G1H150000200L							
Acenaphthene	100	82.0	80.6	82	81	1.7	57 - 113	35
4-Chloro-3-methylphenol	100	85.1	86.5	85	86	1.6	42 - 126	35
2-Chlorophenol	100	74.3	63	74	63	16	52 - 110	35
1,4-Dichlorobenzene	100	64.7	53.8	65	54	19	50 - 108	35
2,4-Dinitrotoluene	100	99.3	99.6	99	100	0.22	62 - 113	35
4-Nitrophenol	100	43.5	42.6	43	43	2.0	10 - 145	35
N-Nitrosodi-n-propylamine	100	78.1	69.2	78	69	12	46 - 123	35
Pentachlorophenol	100	98.0	90.5	98	90	7.9	11 - 135	35
Phenol	100	40.6	35.4	41	35	14	20 - 119	35
Pyrene	100	87.8	90.8	88	91	3.4	47 - 155	35
1,2,4-Trichlorobenzene	100	68.9	59.5	69	60	15	49 - 112	35

Table 7-6: Semivolatile TOC Holding Time and Surrogate Standard Results

Sample	Sample Date	Preparation Date	Analysis Date	Collection to Extraction (Days)	Extraction to Analysis (Days)	n-Heptadecane (%)
SDC-M4B-1-M0010-TOE-COMBINED	08/09/11	08/14/11	08/18/11	5	4	107
SDC-M4B-2-M0010-TOE-COMBINED	08/10/11	08/14/11	08/18/11	4	4	115
SDC-M4B-4-M0010-TOE-COMBINED	08/12/11	08/14/11	08/18/11	2	4	115
SDC-M4B-5-M0010-TOE-COMBINED	08/13/11	08/14/11	08/18/11	1	4	116
SDC-M4B-FB-M0010-TOE-COMBINED	08/08/11	08/14/11	08/18/11	4	4	114
SDC-M4B-RB-M0010-TOE-COMBINED	08/10/11	08/14/11	08/18/11	4	4	117
SDC-M4B-TB-M0010-TOE-XAD	08/10/11	08/14/11	08/18/11	4	4	125
H1H140000-010 (MB)	---	08/14/11	08/17/11	---	3	104
H1H140000-010 (LCS)	---	08/14/11	08/17/11	---	3	105
H1H140000-010 (LCSD)	---	08/14/11	08/17/11	---	3	102

SAP/QAPP Limit: 14 days from collection to extraction
40 days from extraction to analysis
Recovery = 50 to 150%;

Table 7-7: Semivolatile TOC LCS Results

Sample ID	Concentration (mg)			Recovery (%)		RPD (%)
	True	LCS	LCSD	LCS	LCSD	
Total Chromatographic Organics						
H1H140000-010	0.225	0.313	0.267	139	119	16
Gravimetric Organics						
H1H140000-011	2.50	2.53	2.13	101	85	17

SAP/QAPP Limits: Recovery = TCO: 40 to 120%, GRAV: 50 to 150%
RPD = TCO: ≤ 50%, GRAV: ≤ 35%

Table 7-8: Dioxin/Furan Sample Holding Time Summary

Sample Name	Sample Date	Preparation Date	Analysis Date	Collection to Extraction (Days)	Extraction to Analysis (Days)
SDC-M4B-1-M0023A-FH	08/09/11	08/15/11	08/17/11	6	2
SDC-M4B-1-M0023A-BH	08/09/11	08/15/11	08/17/11	6	2
SDC-M4B-2-M0023A-FH	08/10/11	08/15/11	08/17/11	5	2
SDC-M4B-2-M0023A-BH	08/10/11	08/15/11	08/17/11	5	2
SDC-M4B-4-M0023A-FH	08/12/11	08/15/11	08/17/11	3	2
SDC-M4B-4-M0023A-BH	08/12/11	08/15/11	08/17/11	3	2
SDC-M4B-5-M0023A-FH	08/13/11	08/15/11	08/17/11	2	2
SDC-M4B-5-M0023A-BH	08/13/11	08/15/11	08/18/11	2	3
SDC-M4B-FB-M0023A-FH	08/08/11	08/15/11	08/18/11	7	3
SDC-M4B-FB-M0023A-BH	08/08/11	08/15/11	08/18/11	7	3
SDC-M4B-RB-M0023A-FILT	08/10/11	08/15/11	08/18/11	5	3
SDC-M4B-RB-M0023A-XAD	08/10/11	08/15/11	08/18/11	5	3
SDC-M4B-RB-M0023A-Ace/MeCl/Tol	08/10/11	08/15/11	08/18/11	5	3
SDC-M4B-TB-M0023A-XAD	08/10/11	08/15/11	08/18/11	5	3
INTRA-LAB BLANK(MLNJT1AA)	---	08/15/11	08/17/11	---	2
INTRA-LAB BLANK(MLNJT1AE)	---	08/15/11	08/17/11	---	2
CHECK SAMPLE(MLNJT1AC)	---	08/15/11	08/17/11	---	2
DUPLICATE CHECK(MLNJT1AD)	---	08/15/11	08/17/11	---	2

SAP/QAPP Limits: 30 days from collection to extraction
45 days from extraction to analysis

Table 7-9: Dioxin/Furan Internal and Surrogate Standard Results

	Internal Standards									Surrogates				
	^{13}C-2,3,7,8-TetraCDD	^{13}C-1,2,3,7,8-PentaCDD	^{13}C-1,2,3,6,7,8-HexaCDD	^{13}C-1,2,3,4,6,7,8-HeptaCDD	^{13}C-OctaCDD	^{13}C-2,3,7,8-TetraCDF	^{13}C-1,2,3,7,8-PentaCDF	^{13}C-1,2,3,6,7,8-HexaCDF	^{13}C-1,2,3,4,6,7,8-HeptaCDF	^{37}Cl$_4$-2,3,7,8-TetraCDD	^{13}C-2,3,4,7,8-PentaCDF	^{13}C-1,2,3,4,7,8-HexaCDF	^{13}C-1,2,3,4,7,8-HexaCDD	^{13}C-1,2,3,4,7,8,9-HeptaCDF
	SAP/QAPP Limit (%)													
Sample Name	40-135			25-150		40-135			25-150	70-130				
SDC-M4B-1-M0023A-FH	87	82	90	66	70	94	89	90	74	95	97	80	**69**	92
SDC-M4B-1-M0023A-BH	90	85	95	70	74	98	90	94	76	95	99	79	**68**	98
SDC-M4B-2-M0023A-FH	90	86	99	72	79	97	93	98	81	98	103	79	70	97
SDC-M4B-2-M0023A-BH	88	84	83	70	75	96	91	90	76	97	98	78	88	99
SDC-M4B-4-M0023A-FH	89	85	94	69	75	96	91	91	78	96	99	83	70	99
SDC-M4B-4-M0023A-BH	80	80	87	68	73	86	86	91	77	96	102	86	82	96
SDC-M4B-5-M0023A-FH	66	64	75	53	57	74	68	77	62	99	106	82	74	96
SDC-M4B-5-M0023A-BH	84	80	84	69	74	92	87	87	75	96	98	90	85	97
SDC-M4B-FB-M0023A-FH	88	88	84	74	78	97	92	90	79	97	99	89	89	97
SDC-M4B-FB-M0023A-BH	70	77	89	71	76	75	78	89	75	94	101	78	**69**	99
SDC-M4B-RB-M0023A-FILT	74	78	96	73	80	80	81	94	80	97	106	82	71	101
SDC-M4B-RB-M0023A-XAD	90	86	88	74	76	97	91	94	80	94	100	88	86	97
SDC-M4B-RB-M0023A-Ace/MeCl/Tol	88	85	77	72	78	93	88	82	78	---	---	---	---	---
SDC-M4B-TB-M0023A-XAD	87	82	89	70	75	95	87	87	75	94	96	80	**66**	101
INTRA-LAB BLANK(MLNJT1AA)	90	89	89	78	79	95	92	89	78	96	98	88	88	106
INTRA-LAB BLANK(MLNJT1AE)	87	87	94	72	74	92	89	90	77	95	100	82	72	98
CHECK SAMPLE(MLNJT1AC)	88	86	79	75	79	94	90	84	80	---	---	---	---	---
DUPLICATE CHECK(MLNJT1AD)	83	86	80	71	77	92	89	83	80	---	---	---	---	---

Note: **Shading** indicates a result that is outside the acceptable SAP/QAPP limit.

Table 7-10: Dioxin/Furan LCS Results

Laboratory ID:	G1H150000187C/G1H150000187L					
	Concentration (pg)			Recovery (%)		RPD
Spiked Compound	True	LCS	LCSD	LCS	LCSD	(%)
2,3,7,8-TCDD	400	419	415	105	104	0.88
1,2,3,7,8-PeCDD	2,000	2,110	2,090	106	105	0.95
1,2,3,4,7,8-HxCDD	2,000	2,460	2,400	123	120	2.4
1,2,3,6,7,8-HxCDD	2,000	2,490	2,540	124	127	2.1
1,2,3,7,8,9-HxCDD	2,000	2,540	2,580	127	129	1.6
1,2,3,4,6,7,8-HpCDD	2,000	2,140	2,190	107	110	2.5
OCDD	4,000	4,470	4,480	112	112	0.18
2,3,7,8-TCDF	400	456	464	114	116	1.9
1,2,3,7,8-PeCDF	2,000	2,200	2,230	110	112	1.3
2,3,4,7,8-PeCDF	2,000	2,190	2,320	110	116	5.7
1,2,3,4,7,8-HxCDF	2,000	2,120	2,210	106	111	4.4
1,2,3,6,7,8-HxCDF	2,000	2,500	2,500	125	125	0.00
2,3,4,6,7,8-HxCDF	2,000	2,550	2,620	127	131	3.0
1,2,3,7,8,9-HxCDF	2,000	2,490	2,540	124	127	2.2
1,2,3,4,6,7,8-HpCDF	2,000	2,310	2,300	115	115	0.15
1,2,3,4,7,8,9-HpCDF	2,000	2,320	2,250	116	113	2.8
OCDF	4,000	4,280	4,360	107	109	1.7

SAP/QAPP Limits: Recovery = 50 to 150% with the following exceptions - 1,2,3,7,8,9-HexaCDD/1,2,3,4,7,8-HexaCDF (50 to 154%), 2,3,4,6,7,8-HexaCDF (50 to 160%), and 1,2,3,7,8,9-HexaCDF (50 to 159%)
RPD = $\leq$ 20%

Table 7-11: Volatile Holding Time Summary and Surrogate Standard Results

Sample Name	Sample Date	Analysis Date	Collection to Analysis (Days)	Surrogate			
				Dibromofluoromethane	1,2-Dichloroethane-d_4	Toluene-d_8	4-Bromofluorobenzene
				QAPP/SAP Limit (%)			
				50-150	50-150	50-150	50-150
SDC-M4B-1-M0030-COND	08/09/11	08/16/11	7	89	81	100	93
SDC-M4B-1-M0030-T1	08/09/11	08/16/11	7	96	103	101	84
SDC-M4B-1-M0030-TC1	08/09/11	08/16/11	7	97	94	97	82
SDC-M4B-1-M0030-T2	08/09/11	08/16/11	7	97	97	97	81
SDC-M4B-1-M0030-TC2	08/09/11	08/16/11	7	94	91	93	83
SDC-M4B-1-M0030-T3	08/09/11	08/16/11	7	96	97	98	85
SDC-M4B-1-M0030-TC3	08/09/11	08/16/11	7	97	96	95	79
SDC-M4B-1-M0030-T4	08/09/11	08/16/11	7	94	94	98	87
SDC-M4B-1-M0030-TC4	08/09/11	08/16/11	7	94	91	95	80
SDC-M4B-2-M0030-COND	08/10/11	08/16/11	6	95	87	96	91
SDC-M4B-2-M0030-T1	08/10/11	08/15/11	5	94	93	97	82
SDC-M4B-2-M0030-TC1	08/10/11	08/15/11	5	93	88	93	72
SDC-M4B-2-M0030-T2	08/10/11	08/15/11	5	97	100	97	86
SDC-M4B-2-M0030-TC2	08/10/11	08/15/11	5	89	90	92	72
SDC-M4B-2-M0030-T3	08/10/11	08/15/11	5	96	93	93	80
SDC-M4B-2-M0030-TC3	08/10/11	08/15/11	5	95	93	93	77
SDC-M4B-2-M0030-T4	08/10/11	08/15/11	5	93	94	95	80
SDC-M4B-2-M0030-TC4	08/10/11	08/15/11	5	94	96	96	83
SDC-M4B-4-M0030-COND	08/12/11	08/16/11	4	90	83	95	91
SDC-M4B-4-M0030-T1	08/12/11	08/16/11	4	95	99	96	83
SDC-M4B-4-M0030-TC1	08/12/11	08/16/11	4	96	95	97	78
SDC-M4B-4-M0030-T2	08/12/11	08/16/11	4	95	96	94	77
SDC-M4B-4-M0030-TC2	08/12/11	08/16/11	4	90	90	96	77
SDC-M4B-4-M0030-T3	08/12/11	08/16/11	4	96	97	96	82
SDC-M4B-4-M0030-TC3	08/12/11	08/16/11	4	93	93	99	77
SDC-M4B-4-M0030-T4	08/12/11	08/16/11	4	98	96	95	84
SDC-M4B-4-M0030-TC4	08/12/11	08/16/11	4	95	93	102	80
SDC-M4B-5-M0030-COND	08/13/11	08/16/11	3	92	84	96	93
SDC-M4B-5-M0030-T1	08/13/11	08/17/11	4	96	95	96	85
SDC-M4B-5-M0030-TC1	08/13/11	08/17/11	4	83	78	87	70
SDC-M4B-5-M0030-T2	08/13/11	08/17/11	4	96	97	100	86
SDC-M4B-5-M0030-TC2	08/13/11	08/17/11	4	92	89	94	78
SDC-M4B-5-M0030-T3	08/13/11	08/17/11	4	95	92	97	83
SDC-M4B-5-M0030-TC3	08/13/11	08/17/11	4	89	87	96	76
SDC-M4B-5-M0030-T4	08/13/11	08/17/11	4	94	94	97	84

Table 7-11: Volatile Holding Time Summary and Surrogate Standard Results (Continued)

Sample Name	Sample Date	Analysis Date	Collection to Analysis (Days)	Surrogate: Dibromofluoromethane	Surrogate: 1,2-Dichloroethane-d_4	Surrogate: Toluene-d_8	Surrogate: 4-Bromofluorobenzene
				QAPP/SAP Limit (%)			
				50-150	50-150	50-150	50-150
SDC-M4B-5-M0030-TC4	08/13/11	08/17/11	4	94	90	94	81
SDC-M4B-1-M0030-T BK	08/09/11	08/15/11	6	94	92	95	83
SDC-M4B-1-M0030-TC BK	08/09/11	08/15/11	6	93	91	95	80
SDC-M4B-2-M0030-T BK	08/10/11	08/15/11	5	92	94	100	82
SDC-M4B-2-M0030-TC BK	08/10/11	08/15/11	5	95	94	97	85
SDC-M4B-4-M0030-T BK	08/12/11	08/15/11	3	94	90	99	82
SDC-M4B-4-M0030-TC BK	08/12/11	08/15/11	3	92	90	97	85
SDC-M4B-5-M0030-T BK	08/13/11	08/15/11	2	88	91	91	80
SDC-M4B-5-M0030-TC BK	08/13/11	08/15/11	2	93	89	95	79
SDC-M4B-TB-M0030-T1	08/13/11	08/15/11	2	96	92	97	83
SDC-M4B-TB-M0030-TC1	08/13/11	08/15/11	2	93	92	98	82
SDC-M4B-1-M0030-COND BK	08/09/11	08/16/11	7	91	84	93	90
INTRA-LAB BLANK (MLM1N1AA)	---	08/15/11	---	92	92	95	74
INTRA-LAB BLANK (MLM7C1AA)	---	08/16/11	---	93	90	91	68
INTRA-LAB BLANK (MLM7J1AA)	---	08/16/11	---	90	81	96	91
INTRA-LAB BLANK (MLN651AA)	---	08/17/11	---	92	88	94	65
CHECK SAMPLE (MLM1N1AC)	---	08/15/11	---	79	80	91	68
DUPLICATE CHECK (MLM1N1AD)	---	08/15/11	---	95	95	102	79
CHECK SAMPLE (MLM7C1AC)	---	08/16/11	---	87	84	87	54
DUPLICATE CHECK (MLM7C1AD)	---	08/16/11	---	93	94	99	82
CHECK SAMPLE (MLM7J1AC)	---	08/16/11	---	93	81	97	92
DUPLICATE CHECK (MLM7J1AD)	---	08/16/11	---	94	84	94	93
CHECK SAMPLE (MLN651AC)	---	08/17/11	---	95	93	95	79
DUPLICATE CHECK (MLN651AD)	---	08/17/11	---	93	90	96	83

SAP/QAPP Limit: 14 days from sample collection to analysis

Table 7-12: Volatile LCS Results

Laboratory ID:	H1H150000015C/H1H150000015L							
Date Analyzed:	08/15/11							
	Concentration (ug)			**Recovery (%)**		**RPD**	**QAPP/SAP Limits (%)**	
Spiked Compound	**True**	**LCS**	**LCSD**	**LCS**	**LCSD**	**(%)**	**Recovery**	**RPD**
Benzene	0.250	0.223	0.240	89	96	7.2	50 - 150	25
1,1-Dichloroethene	0.250	0.228	0.256	91	103	12	50 - 150	25
Trichloroethene	0.250	0.253	0.271	101	108	7.0	50 - 150	25
Toluene	0.250	0.238	0.257	95	103	7.3	50 - 150	25
Chlorobenzene	0.250	0.219	0.235	87	94	7.2	50 - 150	25
Laboratory ID:	H1H150000120C/H1H150000120L							
Date Analyzed:	08/16/11							
	Concentration (ug)			**Recovery (%)**		**RPD**	**QAPP/SAP Limits (%)**	
Spiked Compound	**True**	**LCS**	**LCSD**	**LCS**	**LCSD**	**(%)**	**Recovery**	**RPD**
Benzene	0.250	0.231	0.249	93	100	7.5	50 - 150	25
1,1-Dichloroethene	0.250	0.260	0.257	104	103	0.96	50 - 150	25
Trichloroethene	0.250	0.268	0.274	107	110	2.4	50 - 150	25
Toluene	0.250	0.221	0.249	88	100	12	50 - 150	25
Chlorobenzene	0.250	0.186	0.240	74	96	25	50 - 150	25
Laboratory ID:	H1H150000126C/H1H150000126L							
Date Analyzed:	08/16/11							
	Concentration (ug/L)			**Recovery (%)**		**RPD**	**QAPP/SAP Limits (%)**	
Spiked Compound	**True**	**LCS**	**LCSD**	**LCS**	**LCSD**	**(%)**	**Recovery**	**RPD**
Benzene	10.0	10.6	10.3	106	103	2.7	50 - 150	25
1,1-Dichloroethene	10.0	10.5	10.6	105	106	0.36	50 - 150	25
Trichloroethene	10.0	10.8	10.3	108	103	5.1	50 - 150	25
Toluene	10.0	10.8	10.3	108	103	4.2	50 - 150	25
Chlorobenzene	10.0	10.3	9.85	103	99	4.6	50 - 150	25
Laboratory ID:	H1H160000071C/H1H160000071L							
Date Analyzed:	08/17/11							
	Concentration (ug/L)			**Recovery (%)**		**RPD**	**QAPP/SAP Limits (%)**	
Spiked Compound	**True**	**LCS**	**LCSD**	**LCS**	**LCSD**	**(%)**	**Recovery**	**RPD**
Benzene	0.250	0.244	0.248	98	99	1.8	50 - 150	25
1,1-Dichloroethene	0.250	0.262	0.255	105	102	2.5	50 - 150	25
Trichloroethene	0.250	0.282	0.272	113	109	3.5	50 - 150	25
Toluene	0.250	0.238	0.244	95	98	2.5	50 - 150	25
Chlorobenzene	0.250	0.232	0.238	93	95	2.9	50 - 150	25

Notes: Only the five (5) spiking compounds identified in the SAP/QAPP are included in the summary tables.
Recovery limits from Table A-9 of the SAP/QAPP.

Table 7-13: Volatile TOC Condensate Holding Time Summary and Surrogate Standard Results

Sample	Sample Date	Preparation Date	Analysis Date	Collection to Analysis (Days)	n-Octane Recovery (%)
SDC-M4B-1A-M0040-TOE-COND	08/09/11	08/15/11	08/18/11	9	98
SDC-M4B-1B-M0040-TOE-COND	08/09/11	08/15/11	08/18/11	9	100
SDC-M4B-1FB-M0040-TOE-COND	08/09/11	08/15/11	08/18/11	9	103
SDC-M4B-2A-M0040-TOE-COND	08/10/11	08/15/11	08/18/11	8	102
SDC-M4B-2B-M0040-TOE-COND	08/10/11	08/15/11	08/18/11	8	104
SDC-M4B-2FB-M0040-TOE-COND	08/10/11	08/15/11	08/18/11	8	99
SDC-M4B-4A-M0040-TOE-COND	08/12/11	08/15/11	08/18/11	6	102
SDC-M4B-4B-M0040-TOE-COND	08/12/11	08/15/11	08/18/11	6	94
SDC-M4B-4FB-M0040-TOE-COND	08/12/11	08/15/11	08/18/11	6	95
SDC-M4B-5A-M0040-TOE-COND	08/13/11	08/15/11	08/18/11	5	98
SDC-M4B-5B-M0040-TOE-COND	08/13/11	08/15/11	08/18/11	5	98
SDC-M4B-5FB-M0040-TOE-COND	08/13/11	08/15/11	08/18/11	5	99
Method Blank (H1H150000-035)	---	08/15/11	08/18/11	---	103
LCS (H1H150000-035)	---	08/15/11	08/18/11	---	96
LCSD (H1H150000-035)	---	08/15/11	08/18/11	---	96

SAP/QAPP Limit: Recovery = 50 to 150%

Table 7-14: Volatile TOC Field Spike Results

Spike Sample:	Run 2 Bag "A"			
Compounds	**Sample (ppmv)**	**Spike (ppmv)**	**Field Spike (ppmv)**	**Recovery (%)**
C_1-Methane	0.852	---	0.824	---
C_2-Ethane	0.0743	---	0.0403	---
C_3-Propane	0.0532	1.06	1.10	104.1
C_4-Butane	0.0194	---	0.0231	---
C_5-Pentane	<0.014	---	<0.014	---
C_6-Hexane	2.58	---	2.98	---
C_7-Heptane	<0.049	---	<0.049	---

SAP/QAPP Limit: Recovery = 80 to 120%

Table 7-15: Volatile TOC LCS Results

Run Number:		Run 1		Run 2		Run 4		Run 5	
Date:		08/09/11		08/10/11		08/12/11		08/13/11	
Analyte	True (ppmv)	LCS (ppmv)	Recovery (%)	LCS (ppmv)	Recovery (%)	LCS (ppmv)	Recovery (%)	LCS (ppmv)	Recovery (%)
Methane (C_1)	1.152	1.129	98.0	1.130	98.1	1.178	102.2	1.169	101.4
Ethane (C_2)	1.100	1.068	97.1	1.074	97.6	1.122	102.0	1.115	101.3
Propane (C_3)	1.100	1.081	98.3	1.084	98.5	1.135	103.2	1.128	102.5
Butane (C_4)	1.100	1.080	98.2	1.081	98.3	1.137	103.3	1.127	102.5
Pentane (C_5)	1.100	1.079	98.1	1.078	98.0	1.137	103.3	1.124	102.2
Hexane (C_6)	1.100	1.076	97.8	1.062	96.6	1.142	103.8	1.117	101.6
Heptane (C_7)	1.152	1.107	96.1	1.076	93.4	1.182	102.5	1.152	99.9

Note: Run 1 samples were analyzed on the same day as the initial calibration and an LCS was not required.
SAP/QAPP Limit: Recovery = 75 to 125%

Table 7-16: Volatile TOC Condensate LCS/LCSD Results

Sample ID:	H1H150000-035					
Analysis Date:	08/18/11					
	Concentration (ug/sample)			Recovery (%)		RPD
Element	True	LCS	LCSD	LCS	LCSD	(%)
C_5-Pentane	0.250	0.277	0.255	111	102	8.2
C_6-Hexane	0.250	0.259	0.263	104	105	1.3
C_7-Heptane	0.250	0.258	0.250	103	100	3.3

SAP/QAPP Limit: Recovery = 50 to 150%
RPD = 0 to 35%

Table 7-17: Acid Gas Sample Holding Time Summary

Sample Name	Sample Date	Preparation Date	Analysis Date	Collection to Analysis (Days)
SDC-M4B-1-M5/26A-ACDIMP	08/09/11	08/17/11	08/17/11	8
SDC-M4B-2-M5/26A-ACDIMP	08/10/11	08/17/11	08/17/11	7
SDC-M4B-4-M5/26A-ACDIMP	08/12/11	08/17/11	08/17/11	5
SDC-M4B-5-M5/26A-ACDIMP	08/13/11	08/17/11	08/17/11	4
SDC-M4B-FB-M5/26A-ACDIMPA	08/08/11	08/17/11	08/17/11	9
SDC-M4B-RB-M5/26A-ACDIMP	08/10/11	08/17/11	08/17/11	7
SDC-M4B-RB-M5/26A-WATER	08/10/11	08/17/11	08/17/11	7
MB (G1H180000265B)	---	08/17/11	08/17/11	---
MB (G1H180000266B)	---	08/17/11	08/17/11	---
LCS (G1H180000-265)	---	08/17/11	08/17/11	---
LCS (G1H180000-266)	---	08/17/11	08/17/11	---
MS (G1H140414-003S)	08/09/11	08/17/11	08/17/11	8
MSD (G1H140414-003D)	08/09/11	08/17/11	08/17/11	8
MS (G1H140414-003S)	08/09/11	08/17/11	08/17/11	8
MSD (G1H140414-003D)	08/09/11	08/17/11	08/17/11	8
SDC-M4B-1-M5/26A-ALKIMP	08/09/11	08/18/11	08/18/11	9
SDC-M4B-2-M5/26A-ALKIMP	08/10/11	08/18/11	08/18/11	8
SDC-M4B-4-M5/26A-ALKIMP	08/12/11	08/18/11	08/18/11	6
SDC-M4B-5-M5/26A-ALKIMP	08/13/11	08/18/11	08/18/11	5
SDC-M4B-FB-M5/26A-ALKIMP	08/08/11	08/18/11	08/18/11	10
SDC-M4B-RB-M5/26A-ALKIMP	08/10/11	08/18/11	08/18/11	8
MB (G1H180000-267)	---	08/18/11	08/18/11	---
LCS (G1H180000-267)	---	08/18/11	08/18/11	---
MS (G1H140414-004S)	08/09/11	08/18/11	08/18/11	9
MSD (G1H140414-004D)	08/09/11	08/18/11	08/18/11	9

SAP/QAPP Limit: 28 days from collection to analysis

Table 7-18: Acid Gas LCS Results

Sample ID	Analysis Date	Parameter	Units	Concentration		Recovery (%)
				True	LCS	
G1H180000-267	08/18/11	Chlorine	mg	25.0	24.9	100
G1H180000-265	08/17/11	Hydrochloric Acid	mg	25.7	25.5	99
G1H180000-266	08/17/11	Hydrogen Fluoride	mg	26.3	26.1	99

SAP/QAPP Limit: Recovery = 90 to 110%

Table 7-19: Acid Gas MS/MSD Results

Sample ID	Analysis Date	Parameter	Units	Concentration				Recovery (%)		RPD (%)
				Spike	Sample	MS	MSD	MS	MSD	
G1H140414-004	08/18/11	Chlorine	mg	4.20	ND	4.11	4.11	98	98	0.09
G1H140414-003	08/17/11	Hydrochloric Acid	mg	22.0	ND	21.5	21.1	98	96	1.9
G1H140414-003	08/17/11	Hydrogen Fluoride	mg	22.5	ND	21.6	21.4	96	95	0.64

SAP/QAPP Limit: Recovery = 85 to 125%
RPD = 0 to 25%

Table 7-20: Trace Metal Blank Results

Parameter	Method Blank (ug)		Field Blank (ug)		Reagent Blank (ug)	
	Front-Half	Back-Half	Front-Half	Back-Half	Front-Half	Back-Half
Antimony	0.043	ND	0.018	ND	0.021	ND
Arsenic	0.18	0.13	ND	0.16	ND	0.14
Barium	ND	ND	2.1	1.5	1.6	0.25
Beryllium	ND	ND	0.015	ND	ND	ND
Boron	ND	ND	3.4	20.7	1.0	ND
Cadmium	ND	ND	0.035	0.023	ND	ND
Chromium	ND	ND	1.8	ND	1.3	ND
Cobalt	0.011	0.0091	0.087	0.075	0.015	ND
Copper	ND	0.038	0.60	0.63	0.40	0.38
Lead	ND	0.072	0.29	0.30	0.17	0.23
Manganese	ND	ND	0.99	0.27	0.53	0.084
Mercury (Front-Half)	0.050	---	ND	---	ND	---
Mercury (HNO_3/H_2O_2)	---	ND	---	ND	---	0.24
Mercury ($KMnO_4$)	---	0.050	---	ND	---	ND
Mercury (Empty Impinger)	---	ND	---	ND	---	ND
Mercury (HCl)	---	0.050	---	0.15	---	0.046
Nickel	ND	0.26	0.99	0.60	0.38	0.048
Phosphorus	ND	ND	ND	13.9	ND	15.5
Selenium	ND	ND	ND	ND	ND	ND
Silver	ND	ND	2.6	0.018	0.0085	ND
Thallium	ND	ND	ND	ND	ND	ND
Tin	0.29	0.97	ND	2.3	ND	1.4
Vanadium	ND	ND	ND	ND	ND	ND
Zinc	ND	ND	14.0	6.0	6.8	ND

Table 7-21: Trace Metal LCS/LCSD Results

Sample ID:	G1H160000188C/G1H160000188L					
	Concentration (ug)			Recovery (%)		RPD
Element	True	LCS	LCSD	LCS	LCSD	(%)
Antimony	30.0	27.6	27.1	92	90	1.9
Arsenic	30.0	27.3	27.0	91	90	1.2
Barium	30.0	26.9	26.6	90	89	1.2
Beryllium	30.0	26.5	26.5	88	88	0.07
Boron	150	141	141	94	94	0.44
Cadmium	30.0	26.7	26.5	89	88	0.63
Chromium	30.0	30.2	29.8	101	99	1.4
Cobalt	30.0	31.7	31.1	106	104	1.7
Copper	30.0	27.4	27.0	91	90	1.6
Lead	30.0	28.5	28.5	95	95	0.19
Manganese	30.0	27.7	27.3	92	91	1.4
Nickel	30.0	27.3	27.0	91	90	0.93
Phosphorus	150	132	131	88	87	1.3
Selenium	30.0	28.3	27.9	94	93	1.2
Silver	7.50	6.68	6.63	89	88	0.84
Thallium	7.50	6.80	6.73	91	90	1.1
Tin	30.0	27.3	28.4	91	95	4.0
Vanadium	30.0	29.3	29.1	98	97	0.82
Zinc	30.0	27.7	27.3	92	91	1.4
Sample ID:	**G1H170000163C**					
	Concentration (ug)			Recovery (%)		RPD
Element	True	LCS	LCSD	LCS	LCSD	(%)
Antimony	31.4	26.1	---	83	---	---
Arsenic	31.4	24.6	---	78	---	---
Barium	31.4	28.7	---	92	---	---
Beryllium	31.4	23.9	---	76	---	---
Boron	157	133	---	85	---	---
Cadmium	31.4	25.0	---	80	---	---
Chromium	31.4	32.8	---	104	---	---
Cobalt	31.4	33.8	---	108	---	---
Copper	31.4	28.8	---	92	---	---
Lead	31.4	30.0	---	96	---	---
Manganese	31.4	29.8	---	95	---	---
Nickel	31.4	28.9	---	92	---	---
Phosphorus	157	131	---	83	---	---
Selenium	31.4	24.2	---	77	---	---
Silver	7.85	6.73	---	86	---	---
Thallium	7.85	7.17	---	91	---	---
Tin	31.4	30.4	---	97	---	---
Vanadium	31.4	30.2	---	96	---	---
Zinc	31.4	24.6	---	78	---	---
Sample ID:	**G1H180000145C, G1H180000147C, G1H180000148C, G1H180000146C, G1H180000149C**					
	Concentration (ug)			Recovery (%)		RPD
Mercury	True	LCS	LCSD	LCS	LCSD	(%)
Front-Half	1.00	0.94	---	94	---	---
HNO_3/H_2O	1.00	1.17	---	117	---	---
$KMnO_4$	1.00	0.94	---	94	---	---
Empty	1.00	1.17	---	117	---	---
HCl	1.00	0.94	---	94	---	---

SAP/QAPP Limit: Recovery = 75 to 125%
RPD = Not Applicable

Table 7-22: Trace Metal MS/MSD Results

Sample ID:	G1H140413001S, G1H140413001D						
	Concentration (ug)				Recovery (%)		RPD
Element	True	Sample	MS	MSD	MS	MSD	(%)
Antimony	30.0	0.026	33.9	34.4	113	115	1.4
Arsenic	30.0	ND	27.8	28.3	93	94	1.8
Barium	30.0	3.3	35.1	35.6	106	108	1.5
Beryllium	30.0	ND	28.6	29.3	95	97	2.2
Boron	150	5.4	150	152	97	98	1.4
Cadmium	30.0	0.052	29.0	29.4	96	98	1.5
Chromium	30.0	2.0	33.8	33.9	106	106	0.48
Cobalt	30.0	0.10	30.6	30.9	102	103	1.0
Copper	30.0	1.3	31.0	31.6	99	101	1.7
Lead	30.0	0.25	34.5	35.4	114	117	2.5
Manganese	30.0	6.3	37.4	37.8	104	105	1.3
Nickel	30.0	0.95	31.0	31.3	100	101	1.0
Phosphorus	150	ND	138	140	90	91	1.3
Selenium	30.0	ND	24.7	25.2	82	84	2.0
Silver	7.50	0.50	6.50	6.62	80	82	1.8
Thallium	7.50	ND	7.82	7.96	104	106	1.7
Tin	30.0	ND	28.1	28.5	93	94	1.5
Vanadium	30.0	ND	31.5	31.8	104	105	1.0
Zinc	30.0	16.0	42.3	43.1	88	90	1.8

Sample ID:	G1H140413002S, G1H140413002D						
	Concentration (ug)				Recovery (%)		RPD
Element	True	Sample	MS	MSD	MS	MSD	(%)
Antimony	31.6	ND	27.0	27.2	85	86	0.98
Arsenic	31.6	0.22	25.7	25.9	81	81	0.72
Barium	31.6	1.1	33.3	33.1	102	101	0.44
Beryllium	31.6	ND	24.4	24.1	77	76	1.1
Boron	158	68.2	204	201	86	84	1.9
Cadmium	31.6	0.028	25.9	26.1	82	82	0.49
Chromium	31.6	1.0	39.4	38.8	121	119	1.5
Cobalt	31.6	0.25	39.4	38.7	124	122	1.8
Copper	31.6	1.1	33.3	33.1	102	101	0.70
Lead	31.6	0.61	34.4	34.1	107	106	1.0
Manganese	31.6	0.93	35.2	34.5	108	106	1.8
Nickel	31.6	1.4	34.0	33.2	103	101	2.3
Phosphorus	158	10.6	136	136	79	79	0.00
Selenium	31.6	ND	24.0	24.0	76	76	0.06
Silver	7.90	0.027	6.73	6.45	85	81	4.3
Thallium	7.90	ND	8.76	7.79	111	99	12
Tin	31.6	4.9	36.7	36.5	100	100	0.42
Vanadium	31.6	ND	36.0	35.2	114	111	2.4
Zinc	31.6	13.6	38.0	38.0	77	77	0.05
Mercury (HNO_3/H_2O_2)	20.4	1.7	18.9	18.9	85	84	0.21

Note: **Shading** indicates a result that is not within the QC limits.

SAP/QAPP Limit: Recovery = 75 to 125%
RPD = 0 to 25%

Table 7-23: Energetic Holding Time Summary and Surrogate Standard Results

Sample Name	Sample Date	Preparation Date	Analysis Date	Collection to Extraction (Days)	Extraction to Analysis (Days)	3,4-Dinitrotoluene
						QAPP/SAP Limit (%)
						70-130
SDC-M4B-1-MM5E-PNR/FILT	08/09/11	08/16/11	08/17/11	7	1	---
SDC-M4B-1-MM5E-XAD-TOP	08/09/11	08/15/11	08/17/11	6	2	67
SDC-M4B-1-MM5E-COND	08/09/11	08/15/11	08/16/11	6	1	95
SDC-M4B-2-MM5E-PNR/FILT	08/10/11	08/16/11	08/17/11	6	1	---
SDC-M4B-2-MM5E-XAD-TOP	08/10/11	08/15/11	08/17/11	5	2	65
SDC-M4B-2-MM5E-COND	08/10/11	08/15/11	08/16/11	5	1	92
SDC-M4B-4-MM5E-PNR/FILT	08/12/11	08/16/11	08/17/11	4	1	---
SDC-M4B-4-MM5E-XAD-TOP	08/12/11	08/15/11	08/17/11	3	2	64
SDC-M4B-4-MM5E-COND	08/12/11	08/15/11	08/16/11	3	1	94
SDC-M4B-5-MM5E-PNR/FILT	08/13/11	08/16/11	08/17/11	3	1	---
SDC-M4B-5-MM5E-XAD-TOP	08/13/11	08/15/11	08/17/11	2	2	75
SDC-M4B-5-MM5E-COND	08/13/11	08/15/11	08/16/11	2	1	95
SDC-M4B-FB-MM5E-PNR/FILT	08/11/11	08/16/11	08/17/11	5	1	---
SDC-M4B-FB-MM5E-XAD-TOP	08/11/11	08/15/11	08/17/11	4	2	66
SDC-M4B-FB-MM5E-COND	08/11/11	08/15/11	08/17/11	4	2	93
SDC-M4B-RB-MM5E-PNR/FILT	08/10/11	08/16/11	08/17/11	6	1	---
SDC-M4B-RB-MM5E-XAD-TOP	08/10/11	08/15/11	08/17/11	5	2	56
SDC-M4B-RB-MM5E-WATER	08/10/11	08/15/11	08/17/11	5	2	95
SDC-M4B-TB-MM5E-XAD-TOP	08/10/11	08/15/11	08/17/11	5	2	70
INTRA-LAB BLANK (MLM431AA)	---	08/15/11	08/16/11	---	1	88
INTRA-LAB BLANK (MLNPC1AA)	---	08/15/11	08/17/11	---	2	83
INTRA-LAB BLANK (MLN451AA)	---	08/16/11	08/17/11	---	1	91
CHECK SAMPLE (MLM431AC)	---	08/15/11	08/16/11	---	1	90
DUPLICATE CHECK (MLM431AD)	---	08/15/11	08/16/11	---	1	90
CHECK SAMPLE (MLNPC1AC)	---	08/15/11	08/17/11	---	2	83
DUPLICATE CHECK (MLNPC1AD)	---	08/15/11	08/17/11	---	2	84
CHECK SAMPLE (MLN451AC)	---	08/16/11	08/17/11	---	1	90
DUPLICATE CHECK (MLN451AD)	---	08/16/11	08/17/11	---	1	88

Note: For resin and condensate fractions a seven (7) day holding time to extraction is applied. For the front-half fraction a fourteen (14) day holding time to extraction is applied. For all fractions a fourteen (14) day holding time from extraction to analysis is applied. Surrogate is not added to the front-half rinse and filter fraction. As such, no recoveries are reported.

Table 7-24: Energetic LCS Results

Sample ID:	G1H150000064C/G1H150000064L					
Date Extracted:	08/15/11					
Date Analyzed:	08/16/11					
	Concentration (ug)			**Recovery (%)**		
Compound	**True**	**LCS**	**LCSD**	**LCS**	**LCSD**	**RPD (%)**
2,4-Dinitrotoluene	2.0	1.96	1.93	98	97	1.2
2,6-Dinitrotoluene	2.0	1.95	1.93	97	97	0.72
Nitroglycerin	2.0	1.74	1.80	87	90	3.5
2,4,6-Trinitrotoluene	2.0	1.63	1.64	82	82	0.30
HMX	2.0	1.90	1.93	95	97	1.7
RDX	2.0	2.14	2.18	107	109	1.7
Sample ID:	G1H150000210C/G1H150000210L					
Date Extracted:	08/15/11					
Date Analyzed:	08/17/11					
	Concentration (ug)			**Recovery (%)**		
Compound	**True**	**LCS**	**LCSD**	**LCS**	**LCSD**	**RPD (%)**
2,4-Dinitrotoluene	50.0	44.8	45.2	90	90	0.93
2,6-Dinitrotoluene	50.0	45.2	45.7	90	91	1.1
Nitroglycerin	50.0	41.1	41.0	82	82	0.19
2,4,6-Trinitrotoluene	50.0	37.3	37.9	75	76	1.6
HMX	50.0	45.7	46.4	91	93	1.5
RDX	50.0	48.7	49.2	97	98	1.2
Sample ID:	G1H160000041C/G1H160000041L					
Date Extracted:	08/16/11					
Date Analyzed:	08/17/11					
	Concentration (ug)			**Recovery (%)**		
Compound	**True**	**LCS**	**LCSD**	**LCS**	**LCSD**	**RPD (%)**
2,4-Dinitrotoluene	2.00	1.93	1.91	96	95	1.2
2,6-Dinitrotoluene	2.00	1.93	1.90	97	95	1.9
Nitroglycerin	2.00	1.74	1.71	87	86	1.6
2,4,6-Trinitrotoluene	2.00	1.62	1.59	81	80	1.5
HMX	2.00	1.96	1.95	98	97	0.71
RDX	2.00	2.07	2.06	103	103	0.19

SAP/QAPP Limit: Recovery = 75 to 125%
RPD = Not specified, 50% applied

8.0 EMISSIONS TEST RESULTS SUMMARY

This section presents a summary of the results of the SDC emissions test for C4b. All supporting data are presented in the report appendices.

8.1 DAILY RUN SUMMARIES

The following are daily accounts of the on-site test activities. These summaries are presented in sequential order for the entire emissions testing effort and include the preliminary measurements. Table 8-1 presents a summary of the sampling times.

Monday, August 8, 2011 - C4b Preliminary Measurements: Preliminary velocity traverses and cyclonic flow checks were conducted at the exhaust blower duct prior to the start of the emissions test for C4b. Moisture runs were also conducted to verify the moisture content of the exhaust gas. The cyclonic flow measurements within the duct at the sampling location yielded results within specified limits. All velocity and moisture measurements were reliable indicators of actual flow and moisture conditions and did not change appreciably from run to run. The M0010, M0010 for total organic compounds (M0010-TOC), M0023A, M26A, and M29 field blank sampling trains were set-up and recovered.

Tuesday, August 9, 2011 - C4bR1: Exhaust gas sampling commenced at 1110 hrs and was paused at 1310 hrs for port change. All leak checks were successfully completed. Sampling resumed in the second port at 1420 hrs and concluded at 1620 hrs with all leak checks successfully completed. All samples were recovered, labeled, and custody-sealed.

Wednesday, August 10, 2011 - C4bR2: Exhaust gas sampling commenced at 0940 hrs and was paused at 1140 hrs for port change. All leak checks were successfully completed. Sampling resumed in the second port at 1505 hrs and concluded at 1705 hrs with all leak checks successfully completed. All samples were recovered, labeled, and custody-sealed.

Thursday, August 11, 2011 - C4bR3: Exhaust gas sampling commenced at 1130 hrs and was paused at 1330 hrs for port change. All leak checks were successfully completed. Sampling resumed in the second port at 1650 hrs and paused at 1746 hrs due to a FPI (SDC-13: CO Concentration) being incurred preventing further feed. Once the FPI was cleared, sampling resumed at 2041 hrs and concluded at 2145 hrs with all leak checks successfully completed. All samples were recovered, labeled, and custody-sealed. The MM5E field blank sample train was also set-up and recovered.

Friday, August 12, 2011 - C4bR4: Exhaust gas sampling commenced at 1735 hrs and was paused at 1935 hrs for port change. All leak checks were successfully completed. Sampling resumed in the second port at 2055 hrs and concluded at 2255 hrs with all leak checks successfully completed. All samples were recovered, labeled, and custody-sealed.

Saturday, August 13, 2011 - C4bR5: Exhaust gas sampling commenced at 1155 hrs and was paused at 1355 hrs for port change. All leak checks were successfully completed. Sampling resumed in the second port at 1600 hrs and concluded at 1800 hrs with all leak checks successfully completed. All samples were recovered, labeled, and custody-sealed.

8.2 CYCLONIC FLOW CHECK

A cyclonic flow check was conducted in two (2) ports of the exhaust blower duct on December 4, 2010, prior to the start of the Condition 1 emissions test. The ports were found to be free of cyclonic flow (< 20°) with a mean cyclonic of ~ 11°.

8.3 PERFORMANCE STANDARD RESULTS

The isokinetic and non-isokinetic sampling summary for all sampling trains required to demonstrate performance standards are summarized in Tables 5-2 and 5-3. The measured performance standards are discussed in the following sections.

8.3.1 Select Criteria Pollutant Emissions

CO concentrations were measured by the facility and TRM CEMS located on the exhaust blower duct. Control of products of incomplete combustion was demonstrated by monitoring the CO concentration (ROHA) to below the RCRA/CAA Permit limit of 100 ppmv, dry basis, corrected to 7% O_2. CO concentrations were also measured by a TRM CEMS located on the exhaust blower duct. As summarized in Table 8-2, the average ROHA CO concentrations, measured by facility and TRM CEMS, were in compliance with the RCRA/CAA Permit limit of 100 ppmv, dry basis, corrected to 7% O_2. The average instantaneous CO emission rates were also in compliance with the CAA Permit limit of 0.02 lbs/hr.

SO_2 and NO_x emissions were measured by the TRM CEMS located on the exhaust blower duct. As summarized in Table 8-2, the average SO_2 and NO_x emission rates were in compliance with the CAA Permit limit of 7.20 and 0.80 lbs/hr, respectively. Supporting information is included in Appendix F-1.

Composite exhaust gas samples were collected to determine the concentration of O_2 and CO_2 to be used in the calculation of the exhaust gas molecular weight. This calculated molecular weight was used by individual sampling trains to calculate specific parameters associated with gas flow and sampling train isokinetic percentages (see Table 5-2). In addition, the O_2 data was used to correct emission rates.

8.3.2 DRE

The DRE results are summarized in Table 8-3. The agent emissions were measured by a DAAMS that was located at the exhaust blower duct near the location where exhaust gas sampling was occurring. The four (4)-hour DAAMS tube set was analyzed for mustard agent concentration by the on-site laboratory. The DRE was calculated per the method specified in Alabama Administrative Code 335-14-5-.15(4)(a)1 as follows:

$$DRE = \left(\frac{W_{in} - W_{out}}{W_{out}} \right) x\,100$$

Where:

Win = Feed rate (lbs/hr)
Wout = Emission rate (lbs/hr)

The feed rate was determined based on the amount of agent per hour demonstrated (see Table 3). Further, the feed rate was purity-adjusted which provides a worst-case or lowest DRE. The mustard agent DRE for all runs was in compliance with the RCRA/CAA Permit limit of 99.9999%. Supporting information is included in Appendix G.

8.3.3 Semivolatile Organic Emissions

Table 8-4 summarizes the semivolatile organic emissions results by test run and condition average. No blank corrections have been made to the data. In instances where NDs were incurred, the RL was used to calculate an emissions rate. No permitted emission limits are associated with semivolatile organic emissions. A summary analytical report for semivolatile organics can be found in Appendix F-2.

8.3.4 Dioxin/Furan Emissions

Table 8-5 summarizes the dioxin/furan emissions results by test run and condition average. No blank corrections have been made to the data. In instances where NDs were incurred, the RL was used to calculate an emissions rate. The US EPA TEFs were applied to the detected quantities of each isomer, as well as the total congeners (EPA/100/R-10/005). For the isomer-specific results, the applicable TEF was used to determine the TEQ. The dioxin/furan emission rates for all runs were in compliance with the CAA Permit limit of 0.20 ng-TEQ/dscm, corrected to 7% O_2 using Orsat data. A summary analytical report for dioxins/furans can be found in Appendix F-3.

8.3.5 Volatile Organic Emissions

Table 8-6 summarizes the volatile organic emissions results by test run and condition average. No blank corrections have been made to the data. In instances where NDs were incurred, the RL was used to calculate an emissions rate. No permitted emission limits are associated with volatile organic emissions. A summary analytical report for volatile organics can be found in Appendix F-4.

8.3.6 TOC Emissions

Tables 8-7, 8-8, and 8-9 summarize the TOC emissions results by test run and condition average. Sampling for volatile/semivolatile unspeciated and gravimetric organics was conducted using the M0010 and M0040 sampling trains. In instances where NDs were incurred, the RL was used to calculate an emissions rate. No permitted emission limits are associated with TOC emissions. A summary analytical report for volatile/semivolatile unspeciated and gravimetric organics can be found in Appendices F-5, F-6, and F-7.

8.3.7 Acid Gases and Particulate Emissions

Table 8-10 summarizes the acid gas and particulate emissions results by test run and condition average. No blank corrections have been made to the data. In instances where NDs were incurred, the RL was used to calculate an emissions rate. The chlorine equivalent concentrations for all runs were in compliance with the CAA Permit limit of 21 ppmv, corrected to 7% O_2 using Orsat data. The particulate emission rates for all runs were in compliance with the RCRA/CAA Permit limit of 0.013 gr/dscf, corrected to 7% O_2 using Orsat data. A summary analytical report for acid gases and particulates can be found in Appendix F-8.

8.3.8 Trace Metal Emissions

Table 8-11 summarizes the trace metal emissions results by test run and condition average. No blank corrections have been made to the data. In instances where NDs were incurred, the RL was used to calculate an emissions rate. The low-volatile (arsenic, beryllium, and chromium combined), semivolatile (cadmium and lead combined), and high-volatile (mercury) metal emission rates for all runs were in compliance with the CAA Permit limits of 23, 10, and

8.1 ug/dscm, corrected to 7% O_2 using Orsat data, respectively. A summary analytical report for trace metals can be found in Appendix F-9.

8.3.9 Energetic Emissions

Table 8-12 summarizes the energetic emissions results by test run and condition average. No blank corrections have been made to the data. In instances where NDs were incurred, the RL was used to calculate an emissions rate. No permitted emission limits are associated with energetic emissions. A summary analytical report for energetics can be found in Appendix F-10.

8.4 FPI LIMITS

Based on the C4b emission results and PDARS data, the FPI parameters were within those listed in Table 2 of the ANCDF SDC Emissions Test Plan and demonstrate that the current permitted setpoints are protective of human health and the environment.

Emissions tests have been performed for five (5) conditions at the SDC. C1 was for processing conventional weapons without SIC in the SFU. C2 and C3 were for processing surrogates, including metal oxides, with (C3) and without (C2) SIC in the SFU. C4a and C4b were for processing chemical agent, at low (C4a) and high (C4b) feeds, with SIC in the SFU. C3, C4a, and C4b were used for FPI determination because of the requirement to use SIC in the SFU when processing chemical agent.

8.4.1 Maximum Detonation Chamber Pressure (SDC-01)

The instantaneous FPI setpoint for the maximum detonation chamber pressure was 362 psi. The following detonation chamber pressures were measured during C3, C4a, and C4b emission testing:

	Condition 3			
Statistic (psi)	**C3R1**	**C3R2**	**C3R3**	**Average**
Minimum	2.72	2.88	2.88	2.83
Maximum	8.59	8.57	8.24	8.46
Average	5.87	6.12	6.10	6.03
	Condition 4a			
Statistic (psi)	**C4aR1**	**C4aR2**	**C4aR4**	**Average**
Minimum	4.54	3.25	2.80	3.53
Maximum	10.81	16.12	9.54	12.15
Average	6.57	5.64	4.10	5.44
	Condition 4b			
Statistic (psi)	**C4bR1**	**C4bR4**	**C4bR5**	**Average**
Minimum	7.61	3.50	0.063	3.72
Maximum	**18.32**	13.01	9.80	13.71
Average	10.42	6.29	2.22	6.31

ANCDF proposes 18 psi as the maximum instantaneous detonation chamber pressure FPI (SDC-01).

8.4.2 Minimum Detonation Chamber Temperature (SDC-02)

The instantaneous FPI setpoint for the minimum detonation chamber temperature was 1,000°F. The following detonation chamber temperatures were measured during C3, C4a, and C4b emission testing:

	Condition 3			
Statistic (°F)	**C3R1**	**C3R2**	**C3R3**	**Average**
Minimum	1,246.58	1,399.40	1,398.29	1,348.09
Maximum	1,418.57	1,401.45	1,402.85	1,407.62
Average	1,335.85	1,400.16	1,400.01	1,378.67
	Condition 4a			
Statistic (°F)	**C4aR1**	**C4aR2**	**C4aR4**	**Average**
Minimum	1,449.00	1,449.29	1,449.58	1,449.29
Maximum	1,450.67	1,450.67	1,450.59	1,450.64
Average	1,450.05	1,450.01	1,450.01	1,450.02
	Condition 4b			
Statistic (°F)	**C4bR1**	**C4bR4**	**C4bR5**	**Average**
Minimum	1,449.51	1,449.58	1,441.62	1,446.90
Maximum	1,450.67	1,450.59	1,457.40	1,452.89
Average	1,450.04	1,450.00	1,449.93	1,449.99

ANCDF proposes to retain the current limit of 1,000°F for this FPI as it is an established temperature for treatment of chemical agents. Chemical agents held at a temperature of 1,000°F for a period of 15-minutes are destroyed to the accepted 5X level. Given that no chemical munition will be within the detonation chamber for < 15-minutes, the low temperature limit of 1,000°F provides suitable protection.

8.4.3 Minimum Thermal Oxidizer Temperature (SDC-03)

The instantaneous FPI setpoint for the minimum thermal oxidizer temperature was 1,400°F. The following thermal oxidizer temperatures were measured during C3, C4a, and C4b emission testing:

	Condition 3			
Statistic (°F)	**C3R1**	**C3R2**	**C3R3**	**Average**
Minimum	1,741.34	1,750.03	1,733.59	**1,741.65**
Maximum	1,940.16	2,005.05	1,998.26	1,981.16
Average	1,802.23	1,805.81	1,809.77	1,805.94
	Condition 4a			
Statistic (°F)	**C4aR1**	**C4aR2**	**C4aR4**	**Average**
Minimum	1,759.77	1,771.66	1,772.50	1,767.97
Maximum	1,916.85	1,983.64	1,941.79	1,947.42
Average	1,806.48	1,805.50	1,809.25	1,807.08
	Condition 4b			
Statistic (°F)	**C4bR1**	**C4bR4**	**C4bR5**	**Average**
Minimum	1,855.83	1,723.48	1,872.88	1,817.39
Maximum	2,104.54	2,061.86	2,088.14	2,084.85
Average	1,914.09	1,914.48	1,930.36	1,919.64

ANCDF proposes 1,741°F as the instantaneous minimum thermal oxidizer temperature (SDC-03).

8.4.4 Maximum Thermal Oxidizer Pressure (SDC-04)

The instantaneous FPI setpoint for the maximum thermal oxidizer pressure was 0.0 psi. The following thermal oxidizer pressures were measured during C3, C4a, and C4b emission testing:

	Condition 3			
Statistic (psi)	**C3R1**	**C3R2**	**C3R3**	**Average**
Minimum	-0.136	-0.138	-0.123	-0.132
Maximum	-0.025	-0.041	-0.040	-0.035
Average	-0.069	-0.069	-0.071	-0.069
	Condition 4a			
Statistic (psi)	**C4aR1**	**C4aR2**	**C4aR4**	**Average**
Minimum	-0.120	-0.188	-0.098	-0.135
Maximum	-0.033	0.055	0.0080	0.010
Average	-0.071	-0.056	-0.065	-0.064
	Condition 4b			
Statistic (psi)	**C4bR1**	**C4bR4**	**C4bR5**	**Average**
Minimum	-0.105	-0.093	-0.095	-0.098
Maximum	-0.035	-0.043	-0.048	-0.042
Average	-0.071	-0.071	-0.071	-0.071

ANCDF proposes to retain the instantaneous maximum thermal oxidizer pressure (SDC-04) of -0.01 psi as the SDC System should be maintained under negative pressure during a feed event to minimize impacts to human health and the environment.

8.4.5 Maximum Spray Dryer Temperature (SDC-05)

The instantaneous FPI setpoint for the maximum spray dryer temperature was 500°F. The following spray dryer temperatures were measured during C3, C4a, and C4b emission testing:

	Condition 3			
Statistic (°F)	**C3R1**	**C3R2**	**C3R3**	**Average**
Minimum	322.42	322.96	321.56	322.31
Maximum	338.65	339.34	338.83	338.94
Average	329.91	329.91	329.77	329.86
	Condition 4a			
Statistic (°F)	**C4aR1**	**C4aR2**	**C4aR4**	**Average**
Minimum	314.28	308.38	319.03	313.90
Maximum	339.09	345.54	344.30	342.98
Average	330.03	329.98	329.54	329.85
	Condition 4b			
Statistic (°F)	**C4bR1**	**C4bR4**	**C4bR5**	**Average**
Minimum	375.24	382.03	382.03	379.77
Maximum	403.98	398.13	398.61	**400.24**
Average	390.25	390.14	390.15	390.18

ANCDF proposes 400°F as the instantaneous maximum spray dryer temperature (SDC-05).

8.4.6 Maximum Bag House Pressure (SDC-06)

The instantaneous FPI setpoint for the maximum bag house pressure was 0.3 psi. The following bag house pressures were measured during C3, C4a, and C4b emission testing:

	Condition 3			
Statistic (psi)	**C3R1**	**C3R2**	**C3R3**	**Average**
Minimum	0.045	0.053	0.060	0.053
Maximum	0.183	0.182	0.182	**0.182**
Average	0.129	0.132	0.131	0.131
	Condition 4a			
Statistic (psi)	**C4aR1**	**C4aR2**	**C4aR4**	**Average**
Minimum	0.030	0.020	0.030	0.027
Maximum	0.183	0.180	0.170	0.178
Average	0.105	0.116	0.100	0.107
	Condition 4b			
Statistic (psi)	**C4bR1**	**C4bR4**	**C4bR5**	**Average**
Minimum	0.060	0.070	0.060	0.063
Maximum	0.080	0.095	0.095	0.090
Average	0.069	0.086	0.084	0.080

ANCDF proposes 0.18 psi as the instantaneous maximum bag house pressure (SDC-06).

8.4.7 Minimum Acid Scrubber Flow Rate (SDC-07)

The instantaneous FPI setpoint for the minimum acid scrubber flow rate was 1.0 cfm. The following acid scrubber flow rates were measured during C3, C4a, and C4b emission testing:

	Condition 3			
Statistic (cfm)	**C3R1**	**C3R2**	**C3R3**	**Average**
Minimum	3.74	3.77	3.76	3.76
Maximum	4.05	4.08	4.09	4.07
Average	3.81	3.81	3.80	3.81
	Condition 4a			
Statistic (cfm)	**C4aR1**	**C4aR2**	**C4aR4**	**Average**
Minimum	3.17	3.17	3.16	**3.17**
Maximum	3.55	3.56	3.54	3.55
Average	3.25	3.26	3.24	3.25
	Condition 4b			
Statistic (cfm)	**C4bR1**	**C4bR4**	**C4bR5**	**Average**
Minimum	3.21	3.28	3.28	3.26
Maximum	3.58	3.67	3.33	3.53
Average	3.26	3.33	3.30	3.30

ANCDF proposes 3.2 cfm as the instantaneous minimum acid scrubber flow rate (SDC-07).

8.4.8 Minimum Quench Tower Flow Rate (SDC-08)

The instantaneous FPI setpoint for the minimum quench tower flow rate was 0.5 cfm. The following quench tower flow rates were measured during C3, C4a, and C4b emission testing:

	Condition 3			
Statistic (cfm)	**C3R1**	**C3R2**	**C3R3**	**Average**
Minimum	2.43	2.45	2.45	**2.44**
Maximum	2.59	2.59	2.59	2.59
Average	2.56	2.58	2.58	2.57

Statistic (cfm)	Condition 4a			
	C4aR1	C4aR2	C4aR4	Average
Minimum	2.69	2.69	2.69	2.69
Maximum	2.89	2.88	2.88	2.89
Average	2.84	2.84	2.84	2.84
Statistic (cfm)	**Condition 4b**			
	C4bR1	C4bR4	C4bR5	Average
Minimum	2.70	2.64	2.79	2.71
Maximum	2.89	2.82	2.82	2.84
Average	2.86	2.80	2.80	2.82

ANCDF proposes 2.4 cfm as the instantaneous minimum quench tower flow rate (SDC-08).

8.4.9 Maximum Quench Tower Temperature (SDC-09)

The instantaneous FPI setpoint for the maximum quench tower temperature was 190°F. The following quench tower temperatures were measured during C3, C4a, and C4b emission testing:

Statistic (°F)	Condition 3							
	C3R1		C3R2		C3R3		Average	
	TI-34003	TI-34004	TI-34003	TI-34004	TI-34003	TI-34004	TI-34003	TI-34004
Minimum	141.18	141.55	145.53	145.61	146.78	146.94	144.50	144.70
Maximum	148.64	149.12	150.73	151.19	151.34	151.78	150.24	150.69
Average	145.97	146.25	147.76	148.03	148.69	148.95	147.47	147.74
Statistic (°F)	**Condition 4a**							
	C4aR1		C4aR2		C4aR4		Average	
	TI-34003	TI-34004	TI-34003	TI-34004	TI-34003	TI-34004	TI-34003	TI-34004
Minimum	158.57	158.70	154.21	154.17	159.01	159.22	157.26	157.36
Maximum	163.92	164.43	162.74	163.16	165.04	165.42	163.90	164.34
Average	160.41	160.67	158.76	158.98	160.95	161.16	160.04	160.27
Statistic (°F)	**Condition 4b**							
	C4bR1		C4bR4		C4bR5		Average	
	TI-34003	TI-34004	TI-34003	TI-34004	TI-34003	TI-34004	TI-34003	TI-34004
Minimum	163.43	163.61	164.67	164.77	162.38	162.61	163.49	163.66
Maximum	170.29	170.82	169.93	170.29	169.28	169.58	**169.83**	**170.23**
Average	166.55	166.85	167.19	167.43	165.10	165.31	166.28	166.53

ANCDF proposes 170°F as the instantaneous maximum quench tower temperature (SDC-09).

8.4.10 Maximum Neutral Scrubber Temperature (SDC-10)

The instantaneous FPI setpoint for the maximum neutral scrubber temperature was 200°F. The following neutral scrubber temperatures were measured during C3, C4a, and C4b emission testing:

Statistic (°F)	Condition 3			
	C3R1	C3R2	C3R3	Average
Minimum	160.02	164.69	164.62	163.11
Maximum	171.98	172.55	173.56	172.70
Average	168.27	170.65	171.12	170.01
Statistic (°F)	**Condition 4a**			
	C4aR1	C4aR2	C4aR4	Average
Minimum	174.94	174.65	175.00	174.86
Maximum	180.85	181.35	182.42	181.54
Average	178.35	178.19	178.76	178.43

Statistic (°F)	Condition 4b			
	C4bR1	C4bR4	C4bR5	Average
Minimum	163.82	167.71	164.63	165.39
Maximum	182.25	182.87	182.89	182.67
Average	178.28	179.58	177.02	178.29

ANCDF proposes retaining the manufacturer's standard of 200°F as the instantaneous maximum neutral scrubber temperature (SDC-10).

8.4.11 Maximum Chemical Agent Emissions (SDC-11/12)

The instantaneous and ROHA FPI setpoint for the maximum chemical agent emission rate was 0.03 and 0.006 mg/m^3, respectively. No ACAMS alarm was incurred during C4b testing. ANCDF proposes retaining the ACAMS setpoints as it is protective of human health and the environment.

8.4.12 Maximum CO Concentration (SDC-13)

The ROHA FPI setpoint for the maximum CO concentration was 100 ppmv, dry basis corrected to 7% O_2. The following CO concentrations were measured during C3, C4a, and C4b emission testing:

Statistic (ppmv)	Condition 3			
	C3R1	C3R2	C3R3	Average
Minimum	0.42	0.48	0.16	0.35
Maximum	0.49	1.17	1.14	0.93
Average	0.46	0.61	0.56	0.54
Statistic (ppmv)	**Condition 4a**			
	C4aR1	C4aR2	C4aR4	Average
Minimum	0.14	0.14	0.14	0.14
Maximum	0.64	7.42	9.01	5.69
Average	0.19	0.99	0.52	0.57
Statistic (ppmv)	**Condition 4b**			
	C4bR1	C4bR4	C4bR5	Average
Minimum	0.44	0.23	0.16	0.28
Maximum	0.98	1.55	0.58	1.04
Average	0.64	0.51	0.30	0.48

ANCDF proposes retaining 100 ppmv, dry basis corrected to 7% O_2, as the maximum ROHA CO concentration (SDC-13) as this is a regulatory limit.

8.5 PROPOSED FEED RATES

ANCDF has completed all planned emissions testing for the operation of the SDC. These tests were completed in a manner consistent with the approved test plan and have provided results supportive of the goal of demonstrating compliance with applicable emissions standards and operating conditions.

In designing the test conditions, ANCDF conducted an evaluation of the munitions and wastes that would be destroyed in the SDC to determine an appropriate emissions test condition to evaluate the known munitions to be processed within the chemical mission. As a result of this evaluation, C3 was designed to provide a surrogate test similar to the demonstrations completed for each of the ANCDF incineration systems.

Due to the limited number of chemical munitions available for processing and the limited processing duration, the SDC was never able to sustain a consistent operation tempo. Therefore,

in support of further demonstrating the SDC technology for future applications ANCDF is going to conduct a Throughput, Reliability and Maintainability (TRAM) Study for a one year period. To complete this activity, the SDC will process conventional munitions which may contain metals or chlorine above the levels demonstrated during the previously completed emissions tests. In order to allow for processing of these munitions at rates supportive of the mission, ANCDF proposes to calculate, new feed rates for the parameters listed below.

At present, with the exception of the MACT limitations that were applied by permit to the operation of the SDC, the SDC does not have listed emissions limitations for the parameters below. The SDC was permitted based on an agreement to incorporate the demonstrated emissions from the SDC emissions test into the HRA and verify that these were allowable under an approved combined HRA. Preliminary HRA results have been submitted but at present, a final model has not been approved. As there are no current emission limits in determining an acceptable boundary for this calculation, ANCDF used the MACT emission limits as a starting point.

The MACT standards for new incinerators were applied by permit to the SDC. Within these regulations, MACT contains specific emissions limits for six (6) metals. ANCDF demonstrated compliance with these emissions limits during the final tests at the facility. To begin the process of calculating feed rates, ANCDF calculated emissions rates for each of these MACT limits to one-third (1/3) of the allowable MACT limit. This process produced a percent increase for each metal of concern which was then applied to the feed rate of that metal during the test in which the limit was demonstrated. The result is an increased feed rate that could produce emissions up to one-third (1/3) of the allowable limit.

To address the remainder of the feed parameters, ANCDF evaluated the percentage increase within each of the MACT categories to determine a calculation percentage for the parameters that did not have specific limits. The highest and lowest percentage of increase were excluded and the remainder were averaged to produced a percentage for calculation of the remaining metals.

The table below contains the demonstrated and proposed emissions and feed rates. ANCDF is currently evaluating these proposed rates within the HRA. Preliminary risk assessment runs have been completed with the demonstrated rates and risks have been shown to be well within the allowable limitations imposed under the HRA.

The results of the HRA using the proposed emissions rates will be supplied to ADEM once completed. Once ADEM has approved this final report and the HRA results with the increased emissions rates, ANCDF proposes to adjust allowable feed rates to the SDC to levels summarized in Table 8-13. In the interim, feed rates to the SDC will be managed IAW post emissions test limitations contained in the RCRA Permit.

8.6 DATA FOR USE IN THE HRA

The emissions rates presented in this report are proposed for modeling in the ANCDF HRA, which will be submitted under separate cover. For more discussion on health risk, the current ANCDF Risk Assessment Protocol should be consulted.

8.7 FINAL CONCLUSIONS

The SDC achieved all compliance objectives specified in the ANCDF SDC Emissions Test Plan and RCRA/CAA Permits while processing mustard-filled munitions with SIC in the SFU.

Table 8-1: Sampling Time Intervals

Run	Date	First Port (hours)		Second Port (hours)	
		Start	Stop	Start	Stop
C4bR1	08/09/11	1110	1310	1420	1620
C4bR2[(1)]	08/10/11	0940	1140	1505	1705
C4bR3[(2)]	08/11/11	1130	1330	1650[(2)]	2145
C4bR4	08/12/11	1735	1935	2055	2255
C4bR5	08/13/11	1155	1355	1600	1800

Footnotes:
(1) C4bR2 was extracted and analyzed; however, with the exception of particulates, the results are for informational purposes only and are not used for compliance.
(2) C4bR3 was paused from 1746 to 2041 hrs after incurring a FPI (SDC-13 - CO Concentration); thus invalidating the run. Samples associated with this run were not extracted or analyzed.

Table 8-2: Summary of Select Criteria Pollutant Emissions

Parameter	Units	C4bR1	C4bR4	C4bR5	Average	RCRA/CAA Permit Limit
Carbon Monoxide (facility CEMS)[(1)]	ppmv	0.64	0.51	0.30	0.48	100 ROHA
	lbs/hr	0.0033	0.0032	0.0011	0.0026	0.02
Carbon Monoxide (TRM CEMS)	ppmv	1.41	1.82	1.56	1.60	---
	lbs/hr	0.0041	0.0051	0.0040	0.0044	---
Sulfur Dioxide (TRM CEMS)	lbs/hr	0.00	0.00054	0.00049	0.00034	7.20
Nitrogen Oxides (TRM CEMS)	lbs/hr	0.27	0.22	0.19	0.23	0.80

Footnote:
(1) Values summarized in table are averages. See Table 4-2 for minimum and maximum values.

Table 8-3: DRE Summary

Parameter	Units	C4bR1	C4bR4	C4bR5	Average	RCRA/CAA Permit Limit
DAAMS Tube	---	AT001119	AT001703	AT004276	---	---
Sample Collection Time	minutes	240	240	240	240	---
DAAMS Flow Rate(1)	sLpm	0.19	0.19	0.20	0.19	---
Total Gas Sample Volume(2)	scm	4.56E-02	4.56E-02	4.80E-02	4.64E-02	---
Dilution Air(3)	%	92.3	92.2	92.0	92.17	---
Percent Exhaust Gas Sampled	%	7.7	7.8	8.0	7.83	---
Total Exhaust Gas Sample Volume	scm	3.51E-03	3.56E-03	3.84E-03	3.64E-03	---
Sample Analysis Result	ng	< 3.97E-01 [ND]	< 3.97E-01 [ND]	< 3.97E-01 [ND]	< 3.97E-01 [ND]	---
Exhaust Gas Flow Rate(4)	scm/hr	1,780.90	1,722.41	1,533.45	1,678.92	---
Agent Concentration	mg/scm	< 1.13E-04 [ND]	< 1.12E-04 [ND]	< 1.03E-04 [ND]	< 1.09E-04 [ND]	---
Emission Rate	lbs/hr	< 4.44E-07 [ND]	< 4.24E-07 [ND]	< 3.50E-07 [ND]	< 4.06E-07 [ND]	---
Average Agent Feed Rate	lbs/hr	62.23	56.62	51.11	56.65	---
Agent Purity(5)	%	83.9	83.9	83.9	83.9	---
Purity-Adjusted Agent Feed Rate	lbs/hr	52.21	47.50	42.88	47.53	---
DRE	%	> 99.9999991 [ND]	> 99.9999991 [ND]	> 99.9999991 [ND]	> 99.9999991 [ND]	99.9999

Footnotes:
(1) Flow rate is set prior to collection of the 4-hour DAAMS tube set and verified after the tubes have been collected. If the ending flow rate is less than the starting flow rate, then the ending (i.e., lower) flow rate is used to calculate the total exhaust gas flow rate.
(2) Total gas sample volume represents the exhaust gas sample volume and diluent volume.
(3) Percent dilution is set prior to collection of the 4-hour tube and verified after the tube has been collected. If the ending percent dilution is greater than the starting percent dilution, the ending (i.e., more dilute) dilution is used to calculate exhaust gas sampled.
(4) The exhaust gas flow rate was calculated based on the average of all isokinetic sample train for the respective run.
(5) Based on historical data, the average mustard purity of 83.9% has been used (see ANCDF SDC Emissions Test Plan, Appendix D).

Table 8-4: Semivolatile Organic Emissions Summary

Parameter		Units	C4bR1	C4bR4	C4bR5	Average
Sample Volume		dscf	141.054	132.731	120.049	131.28
Gas Flow Rate		dscfm	675	645	598	629.33
Acenaphthene	Total Catch	ug	< 30 ND	< 30 ND	< 30 ND	< 30 ND
	Concentration	ug/dscm	< 7.51 ND	< 7.98 ND	< 8.82 ND	< 8.10 ND
	Emission Rate	lbs/hr	< 1.90E-05 ND	< 1.93E-05 ND	< 1.98E-05 ND	< 1.94E-05 ND
	Emission Rate	g/s	< 2.39E-06 ND	< 2.43E-06 ND	< 2.49E-06 ND	< 2.44E-06 ND
Acenaphthylene	Total Catch	ug	< 30 ND	< 30 ND	< 30 ND	< 30 ND
	Concentration	ug/dscm	< 7.51 ND	< 7.98 ND	< 8.82 ND	< 8.10 ND
	Emission Rate	lbs/hr	< 1.90E-05 ND	< 1.93E-05 ND	< 1.98E-05 ND	< 1.94E-05 ND
	Emission Rate	g/s	< 2.39E-06 ND	< 2.43E-06 ND	< 2.49E-06 ND	< 2.44E-06 ND
Acetophenone	Total Catch	ug	< 30 ND	< 30 ND	< 30 ND	< 30 ND
	Concentration	ug/dscm	< 7.51 ND	< 7.98 ND	< 8.82 ND	< 8.10 ND
	Emission Rate	lbs/hr	< 1.90E-05 ND	< 1.93E-05 ND	< 1.98E-05 ND	< 1.94E-05 ND
	Emission Rate	g/s	< 2.39E-06 ND	< 2.43E-06 ND	< 2.49E-06 ND	< 2.44E-06 ND
2-Acetylaminofluorene	Total Catch	ug	< 300 ND	< 300 ND	< 300 ND	< 300 ND
	Concentration	ug/dscm	< 75.10 ND	< 79.81 ND	< 88.24 ND	< 81.05 ND
	Emission Rate	lbs/hr	< 1.90E-04 ND	< 1.93E-04 ND	< 1.98E-04 ND	< 1.94E-04 ND
	Emission Rate	g/s	< 2.39E-05 ND	< 2.43E-05 ND	< 2.49E-05 ND	< 2.44E-05 ND
4-Aminobiphenyl	Total Catch	ug	< 150 ND	< 150 ND	< 150 ND	< 150 ND
	Concentration	ug/dscm	< 37.55 ND	< 39.90 ND	< 44.12 ND	< 40.52 ND
	Emission Rate	lbs/hr	< 9.52E-05 ND	< 9.64E-05 ND	< 9.88E-05 ND	< 9.68E-05 ND
	Emission Rate	g/s	< 1.20E-05 ND	< 1.21E-05 ND	< 1.25E-05 ND	< 1.22E-05 ND
3-Amino-9-ethycarbazole	Total Catch	ug	NOT FOUND	NOT FOUND	NOT FOUND	NOT FOUND
	Concentration	ug/dscm				
	Emission Rate	lbs/hr				
	Emission Rate	g/s				
Aniline	Total Catch	ug	< 30 ND	< 30 ND	< 30 ND	< 30 ND
	Concentration	ug/dscm	< 7.51 ND	< 7.98 ND	< 8.82 ND	< 8.10 ND
	Emission Rate	lbs/hr	< 1.90E-05 ND	< 1.93E-05 ND	< 1.98E-05 ND	< 1.94E-05 ND
	Emission Rate	g/s	< 2.39E-06 ND	< 2.43E-06 ND	< 2.49E-06 ND	< 2.44E-06 ND
Anthracene	Total Catch	ug	< 30 ND	< 30 ND	< 30 ND	< 30 ND
	Concentration	ug/dscm	< 7.51 ND	< 7.98 ND	< 8.82 ND	< 8.10 ND
	Emission Rate	lbs/hr	< 1.90E-05 ND	< 1.93E-05 ND	< 1.98E-05 ND	< 1.94E-05 ND
	Emission Rate	g/s	< 2.39E-06 ND	< 2.43E-06 ND	< 2.49E-06 ND	< 2.44E-06 ND
Aramite	Total Catch	ug	< 60 ND	< 60 ND	< 60 ND	< 60 ND
	Concentration	ug/dscm	< 15.02 ND	< 15.96 ND	< 17.65 ND	< 16.21 ND
	Emission Rate	lbs/hr	< 3.80E-05 ND	< 3.86E-05 ND	< 3.95E-05 ND	< 3.87E-05 ND
	Emission Rate	g/s	< 4.79E-06 ND	< 4.86E-06 ND	< 4.98E-06 ND	< 4.88E-06 ND

Table 8-4: Semivolatile Organic Emissions Summary (Continued)

Parameter		Units	C4bR1		C4bR4		C4bR5		Average	
Benzidine	Total Catch	ug	< 300	ND	< 300	ND	< 300	ND	< 300	ND
	Concentration	ug/dscm	< 75.10	ND	< 79.81	ND	< 88.24	ND	< 81.05	ND
	Emission Rate	lbs/hr	< 1.90E-04	ND	< 1.93E-04	ND	< 1.98E-04	ND	< 1.94E-04	ND
	Emission Rate	g/s	< 2.39E-05	ND	< 2.43E-05	ND	< 2.49E-05	ND	< 2.44E-05	ND
Benzoic acid	Total Catch	ug	< 215		< 214		< 223		< 217.33	
	Concentration	ug/dscm	< 53.82		< 56.93		< 65.59		< 58.78	
	Emission Rate	lbs/hr	< 1.36E-04		< 1.38E-04		< 1.47E-04		< 1.40E-04	
	Emission Rate	g/s	< 1.71E-05		< 1.73E-05		< 1.85E-05		< 1.77E-05	
Benz (a) anthracene	Total Catch	ug	< 30	ND	< 30	ND	< 30	ND	< 30	ND
	Concentration	ug/dscm	< 7.51	ND	< 7.98	ND	< 8.82	ND	< 8.10	ND
	Emission Rate	lbs/hr	< 1.90E-05	ND	< 1.93E-05	ND	< 1.98E-05	ND	< 1.94E-05	ND
	Emission Rate	g/s	< 2.39E-06	ND	< 2.43E-06	ND	< 2.49E-06	ND	< 2.44E-06	ND
Benzo (b) fluoranthrene	Total Catch	ug	< 30	ND	< 30	ND	< 30	ND	< 30	ND
	Concentration	ug/dscm	< 7.51	ND	< 7.98	ND	< 8.82	ND	< 8.10	ND
	Emission Rate	lbs/hr	< 1.90E-05	ND	< 1.93E-05	ND	< 1.98E-05	ND	< 1.94E-05	ND
	Emission Rate	g/s	< 2.39E-06	ND	< 2.43E-06	ND	< 2.49E-06	ND	< 2.44E-06	ND
Benzo (j) fluoranthrene	Total Catch	ug	< 30	ND	< 30	ND	< 30	ND	< 30	ND
	Concentration	ug/dscm	< 7.51	ND	< 7.98	ND	< 8.82	ND	< 8.10	ND
	Emission Rate	lbs/hr	< 1.90E-05	ND	< 1.93E-05	ND	< 1.98E-05	ND	< 1.94E-05	ND
	Emission Rate	g/s	< 2.39E-06	ND	< 2.43E-06	ND	< 2.49E-06	ND	< 2.44E-06	ND
Benzo (k) fluoranthrene	Total Catch	ug	< 30	ND	< 30	ND	< 30	ND	< 30	ND
	Concentration	ug/dscm	< 7.51	ND	< 7.98	ND	< 8.82	ND	< 8.10	ND
	Emission Rate	lbs/hr	< 1.90E-05	ND	< 1.93E-05	ND	< 1.98E-05	ND	< 1.94E-05	ND
	Emission Rate	g/s	< 2.39E-06	ND	< 2.43E-06	ND	< 2.49E-06	ND	< 2.44E-06	ND
Benzo (g,h,i) perylene	Total Catch	ug	< 30	ND	< 30	ND	< 30	ND	< 30	ND
	Concentration	ug/dscm	< 7.51	ND	< 7.98	ND	< 8.82	ND	< 8.10	ND
	Emission Rate	lbs/hr	< 1.90E-05	ND	< 1.93E-05	ND	< 1.98E-05	ND	< 1.94E-05	ND
	Emission Rate	g/s	< 2.39E-06	ND	< 2.43E-06	ND	< 2.49E-06	ND	< 2.44E-06	ND
Benzo (a) pyrene	Total Catch	ug	< 30	ND	< 30	ND	< 30	ND	< 30	ND
	Concentration	ug/dscm	< 7.51	ND	< 7.98	ND	< 8.82	ND	< 8.10	ND
	Emission Rate	lbs/hr	< 1.90E-05	ND	< 1.93E-05	ND	< 1.98E-05	ND	< 1.94E-05	ND
	Emission Rate	g/s	< 2.39E-06	ND	< 2.43E-06	ND	< 2.49E-06	ND	< 2.44E-06	ND
Benzo (e) pyrene	Total Catch	ug	< 30	ND	< 30	ND	< 30	ND	< 30	ND
	Concentration	ug/dscm	< 7.51	ND	< 7.98	ND	< 8.82	ND	< 8.10	ND
	Emission Rate	lbs/hr	< 1.90E-05	ND	< 1.93E-05	ND	< 1.98E-05	ND	< 1.94E-05	ND
	Emission Rate	g/s	< 2.39E-06	ND	< 2.43E-06	ND	< 2.49E-06	ND	< 2.44E-06	ND

Table 8-4: Semivolatile Organic Emissions Summary (Continued)

Parameter		Units	C4bR1		C4bR4		C4bR5		Average	
Benzyl alcohol	Total Catch	ug	< 21.9		< 22.2		< 22.3		< 22.13	
	Concentration	ug/dscm	< 5.48		< 5.91		< 6.56		< 5.98	
	Emission Rate	lbs/hr	< 1.39E-05		< 1.43E-05		< 1.47E-05		< 1.43E-05	
	Emission Rate	g/s	< 1.75E-06		< 1.81E-06		< 1.85E-06		< 1.80E-06	
Benzaldehyde	Total Catch	ug	< 30	ND	< 25.3		< 30	ND	< 28.43	
	Concentration	ug/dscm	< 7.51	ND	< 6.73		< 8.82	ND	< 7.69	
	Emission Rate	lbs/hr	< 1.90E-05	ND	< 1.63E-05		< 1.98E-05	ND	< 1.84E-05	
	Emission Rate	g/s	< 2.39E-06	ND	< 2.05E-06		< 2.49E-06	ND	< 2.31E-06	
Benzenethiol	Total Catch	ug	NOT FOUND		NOT FOUND		NOT FOUND		NOT FOUND	
	Concentration	ug/dscm								
	Emission Rate	lbs/hr								
	Emission Rate	g/s								
Biphenyl	Total Catch	ug	< 30	ND	< 30	ND	< 30	ND	< 30	ND
	Concentration	ug/dscm	< 7.51	ND	< 7.98	ND	< 8.82	ND	< 8.10	ND
	Emission Rate	lbs/hr	< 1.90E-05	ND	< 1.93E-05	ND	< 1.98E-05	ND	< 1.94E-05	ND
	Emission Rate	g/s	< 2.39E-06	ND	< 2.43E-06	ND	< 2.49E-06	ND	< 2.44E-06	ND
bis(2-Chloroethoxy)-methane	Total Catch	ug	< 30	ND	< 30	ND	< 30	ND	< 30	ND
	Concentration	ug/dscm	< 7.51	ND	< 7.98	ND	< 8.82	ND	< 8.10	ND
	Emission Rate	lbs/hr	< 1.90E-05	ND	< 1.93E-05	ND	< 1.98E-05	ND	< 1.94E-05	ND
	Emission Rate	g/s	< 2.39E-06	ND	< 2.43E-06	ND	< 2.49E-06	ND	< 2.44E-06	ND
bis(2-Chloroethyl) ether	Total Catch	ug	< 30	ND	< 30	ND	< 30	ND	< 30	ND
	Concentration	ug/dscm	< 7.51	ND	< 7.98	ND	< 8.82	ND	< 8.10	ND
	Emission Rate	lbs/hr	< 1.90E-05	ND	< 1.93E-05	ND	< 1.98E-05	ND	< 1.94E-05	ND
	Emission Rate	g/s	< 2.39E-06	ND	< 2.43E-06	ND	< 2.49E-06	ND	< 2.44E-06	ND
bis(2-Chloroisopropyl) ether	Total Catch	ug	< 30	ND	< 30	ND	< 30	ND	< 30	ND
	Concentration	ug/dscm	< 7.51	ND	< 7.98	ND	< 8.82	ND	< 8.10	ND
	Emission Rate	lbs/hr	< 1.90E-05	ND	< 1.93E-05	ND	< 1.98E-05	ND	< 1.94E-05	ND
	Emission Rate	g/s	< 2.39E-06	ND	< 2.43E-06	ND	< 2.49E-06	ND	< 2.44E-06	ND
bis(2-Ethylhexyl)-phthalate	Total Catch	ug	36.5		30.8		< 37.5		< 34.93	
	Concentration	ug/dscm	9.14		8.19		< 11.03		< 9.45	
	Emission Rate	lbs/hr	2.31E-05		1.98E-05		< 2.47E-05		< 2.25E-05	
	Emission Rate	g/s	2.91E-06		2.49E-06		< 3.11E-06		< 2.84E-06	
4-Bromophenyl phenyl ether	Total Catch	ug	< 30	ND	< 30	ND	< 30	ND	< 30	ND
	Concentration	ug/dscm	< 7.51	ND	< 7.98	ND	< 8.82	ND	< 8.10	ND
	Emission Rate	lbs/hr	< 1.90E-05	ND	< 1.93E-05	ND	< 1.98E-05	ND	< 1.94E-05	ND
	Emission Rate	g/s	< 2.39E-06	ND	< 2.43E-06	ND	< 2.49E-06	ND	< 2.44E-06	ND

Table 8-4: Semivolatile Organic Emissions Summary (Continued)

Parameter		Units	C4bR1		C4bR4		C4bR5		Average	
Butyl benzyl phthalate	Total Catch	ug	< 30	ND	< 30	ND	< 30	ND	< 30	ND
	Concentration	ug/dscm	< 7.51	ND	< 7.98	ND	< 8.82	ND	< 8.10	ND
	Emission Rate	lbs/hr	< 1.90E-05	ND	< 1.93E-05	ND	< 1.98E-05	ND	< 1.94E-05	ND
	Emission Rate	g/s	< 2.39E-06	ND	< 2.43E-06	ND	< 2.49E-06	ND	< 2.44E-06	ND
2-sec-Butyl-4,6-dinitro-phenol	Total Catch	ug	< 60	ND	< 60	ND	< 60	ND	< 60	ND
	Concentration	ug/dscm	< 15.02	ND	< 15.96	ND	< 17.65	ND	< 16.21	ND
	Emission Rate	lbs/hr	< 3.80E-05	ND	< 3.86E-05	ND	< 3.95E-05	ND	< 3.87E-05	ND
	Emission Rate	g/s	< 4.79E-06	ND	< 4.86E-06	ND	< 4.98E-06	ND	< 4.88E-06	ND
4-Chloroaniline	Total Catch	ug	< 30	ND	< 30	ND	< 30	ND	< 30	ND
	Concentration	ug/dscm	< 7.51	ND	< 7.98	ND	< 8.82	ND	< 8.10	ND
	Emission Rate	lbs/hr	< 1.90E-05	ND	< 1.93E-05	ND	< 1.98E-05	ND	< 1.94E-05	ND
	Emission Rate	g/s	< 2.39E-06	ND	< 2.43E-06	ND	< 2.49E-06	ND	< 2.44E-06	ND
Chlorobenzilate	Total Catch	ug	< 30	ND	< 30	ND	< 30	ND	< 30	ND
	Concentration	ug/dscm	< 7.51	ND	< 7.98	ND	< 8.82	ND	< 8.10	ND
	Emission Rate	lbs/hr	< 1.90E-05	ND	< 1.93E-05	ND	< 1.98E-05	ND	< 1.94E-05	ND
	Emission Rate	g/s	< 2.39E-06	ND	< 2.43E-06	ND	< 2.49E-06	ND	< 2.44E-06	ND
4-Chloro-3-methylphenol	Total Catch	ug	< 150	ND	< 150	ND	< 150	ND	< 150	ND
	Concentration	ug/dscm	< 37.55	ND	< 39.90	ND	< 44.12	ND	< 40.52	ND
	Emission Rate	lbs/hr	< 9.52E-05	ND	< 9.64E-05	ND	< 9.88E-05	ND	< 9.68E-05	ND
	Emission Rate	g/s	< 1.20E-05	ND	< 1.21E-05	ND	< 1.25E-05	ND	< 1.22E-05	ND
1-Chloronaphthalene	Total Catch	ug	< 30	ND	< 30	ND	< 30	ND	< 30	ND
	Concentration	ug/dscm	< 7.51	ND	< 7.98	ND	< 8.82	ND	< 8.10	ND
	Emission Rate	lbs/hr	< 1.90E-05	ND	< 1.93E-05	ND	< 1.98E-05	ND	< 1.94E-05	ND
	Emission Rate	g/s	< 2.39E-06	ND	< 2.43E-06	ND	< 2.49E-06	ND	< 2.44E-06	ND
2-Chloronaphthalene	Total Catch	ug	< 30	ND	< 30	ND	< 30	ND	< 30	ND
	Concentration	ug/dscm	< 7.51	ND	< 7.98	ND	< 8.82	ND	< 8.10	ND
	Emission Rate	lbs/hr	< 1.90E-05	ND	< 1.93E-05	ND	< 1.98E-05	ND	< 1.94E-05	ND
	Emission Rate	g/s	< 2.39E-06	ND	< 2.43E-06	ND	< 2.49E-06	ND	< 2.44E-06	ND
2-Chlorophenol	Total Catch	ug	< 30	ND	< 30	ND	< 30	ND	< 30	ND
	Concentration	ug/dscm	< 7.51	ND	< 7.98	ND	< 8.82	ND	< 8.10	ND
	Emission Rate	lbs/hr	< 1.90E-05	ND	< 1.93E-05	ND	< 1.98E-05	ND	< 1.94E-05	ND
	Emission Rate	g/s	< 2.39E-06	ND	< 2.43E-06	ND	< 2.49E-06	ND	< 2.44E-06	ND
4-Chlorophenyl phenyl ether	Total Catch	ug	< 30	ND	< 30	ND	< 30	ND	< 30	ND
	Concentration	ug/dscm	< 7.51	ND	< 7.98	ND	< 8.82	ND	< 8.10	ND
	Emission Rate	lbs/hr	< 1.90E-05	ND	< 1.93E-05	ND	< 1.98E-05	ND	< 1.94E-05	ND
	Emission Rate	g/s	< 2.39E-06	ND	< 2.43E-06	ND	< 2.49E-06	ND	< 2.44E-06	ND

Table 8-4: Semivolatile Organic Emissions Summary (Continued)

Parameter		Units	C4bR1		C4bR4		C4bR5		Average	
Chrysene	Total Catch	ug	< 30	ND	< 30	ND	< 30	ND	< 30	ND
	Concentration	ug/dscm	< 7.51	ND	< 7.98	ND	< 8.82	ND	< 8.10	ND
	Emission Rate	lbs/hr	< 1.90E-05	ND	< 1.93E-05	ND	< 1.98E-05	ND	< 1.94E-05	ND
	Emission Rate	g/s	< 2.39E-06	ND	< 2.43E-06	ND	< 2.49E-06	ND	< 2.44E-06	ND
4,4'-DDE	Total Catch	ug	NOT FOUND		NOT FOUND		NOT FOUND		NOT FOUND	
	Concentration	ug/dscm								
	Emission Rate	lbs/hr								
	Emission Rate	g/s								
Diallate	Total Catch	ug	< 60	ND	< 60	ND	< 60	ND	< 60	ND
	Concentration	ug/dscm	< 15.02	ND	< 15.96	ND	< 17.65	ND	< 16.21	ND
	Emission Rate	lbs/hr	< 3.80E-05	ND	< 3.86E-05	ND	< 3.95E-05	ND	< 3.87E-05	ND
	Emission Rate	g/s	< 4.79E-06	ND	< 4.86E-06	ND	< 4.98E-06	ND	< 4.88E-06	ND
Dibenz(a,j)acridine	Total Catch	ug	< 60	ND	< 60	ND	< 60	ND	< 60	ND
	Concentration	ug/dscm	< 15.02	ND	< 15.96	ND	< 17.65	ND	< 16.21	ND
	Emission Rate	lbs/hr	< 3.80E-05	ND	< 3.86E-05	ND	< 3.95E-05	ND	< 3.87E-05	ND
	Emission Rate	g/s	< 4.79E-06	ND	< 4.86E-06	ND	< 4.98E-06	ND	< 4.88E-06	ND
Dibenz(a,h)anthracene	Total Catch	ug	< 30	ND	< 30	ND	< 30	ND	< 30	ND
	Concentration	ug/dscm	< 7.51	ND	< 7.98	ND	< 8.82	ND	< 8.10	ND
	Emission Rate	lbs/hr	< 1.90E-05	ND	< 1.93E-05	ND	< 1.98E-05	ND	< 1.94E-05	ND
	Emission Rate	g/s	< 2.39E-06	ND	< 2.43E-06	ND	< 2.49E-06	ND	< 2.44E-06	ND
Dibenzofuran	Total Catch	ug	< 30	ND	< 30	ND	< 30	ND	< 30	ND
	Concentration	ug/dscm	< 7.51	ND	< 7.98	ND	< 8.82	ND	< 8.10	ND
	Emission Rate	lbs/hr	< 1.90E-05	ND	< 1.93E-05	ND	< 1.98E-05	ND	< 1.94E-05	ND
	Emission Rate	g/s	< 2.39E-06	ND	< 2.43E-06	ND	< 2.49E-06	ND	< 2.44E-06	ND
1,2-Dibromo-3-chloropropane	Total Catch	ug	NOT FOUND		NOT FOUND		NOT FOUND		NOT FOUND	
	Concentration	ug/dscm								
	Emission Rate	lbs/hr								
	Emission Rate	g/s								
Di-n-butyl phthalate	Total Catch	ug	< 33.1		< 28.5		< 27.0		< 29.53	
	Concentration	ug/dscm	< 8.29		< 7.58		< 7.94		< 7.94	
	Emission Rate	lbs/hr	< 2.10E-05		< 1.83E-05		< 1.78E-05		< 1.90E-05	
	Emission Rate	g/s	< 2.64E-06		< 2.31E-06		< 2.24E-06		< 2.40E-06	
1,2-Dichlorobenzene	Total Catch	ug	< 30	ND	< 30	ND	< 30	ND	< 30	ND
	Concentration	ug/dscm	< 7.51	ND	< 7.98	ND	< 8.82	ND	< 8.10	ND
	Emission Rate	lbs/hr	< 1.90E-05	ND	< 1.93E-05	ND	< 1.98E-05	ND	< 1.94E-05	ND
	Emission Rate	g/s	< 2.39E-06	ND	< 2.43E-06	ND	< 2.49E-06	ND	< 2.44E-06	ND

Table 8-4: Semivolatile Organic Emissions Summary (Continued)

Parameter		Units	C4bR1		C4bR4		C4bR5		Average	
N,N'-Diisopropylcarbodiimide	Total Catch	ug	NOT FOUND		NOT FOUND		NOT FOUND		NOT FOUND	
	Concentration	ug/dscm								
	Emission Rate	lbs/hr								
	Emission Rate	g/s								
1,3-Dichlorobenzene	Total Catch	ug	< 30	ND	< 30	ND	< 30	ND	< 30	ND
	Concentration	ug/dscm	< 7.51	ND	< 7.98	ND	< 8.82	ND	< 8.10	ND
	Emission Rate	lbs/hr	< 1.90E-05	ND	< 1.93E-05	ND	< 1.98E-05	ND	< 1.94E-05	ND
	Emission Rate	g/s	< 2.39E-06	ND	< 2.43E-06	ND	< 2.49E-06	ND	< 2.44E-06	ND
1,4-Dichlorobenzene	Total Catch	ug	< 30	ND	< 30	ND	< 30	ND	< 30	ND
	Concentration	ug/dscm	< 7.51	ND	< 7.98	ND	< 8.82	ND	< 8.10	ND
	Emission Rate	lbs/hr	< 1.90E-05	ND	< 1.93E-05	ND	< 1.98E-05	ND	< 1.94E-05	ND
	Emission Rate	g/s	< 2.39E-06	ND	< 2.43E-06	ND	< 2.49E-06	ND	< 2.44E-06	ND
3,3'-Dichlorobenzidine	Total Catch	ug	< 60	ND	< 60	ND	< 60	ND	< 60	ND
	Concentration	ug/dscm	< 15.02	ND	< 15.96	ND	< 17.65	ND	< 16.21	ND
	Emission Rate	lbs/hr	< 3.80E-05	ND	< 3.86E-05	ND	< 3.95E-05	ND	< 3.87E-05	ND
	Emission Rate	g/s	< 4.79E-06	ND	< 4.86E-06	ND	< 4.98E-06	ND	< 4.88E-06	ND
2,4-Dichlorophenol	Total Catch	ug	< 30	ND	< 30	ND	< 30	ND	< 30	ND
	Concentration	ug/dscm	< 7.51	ND	< 7.98	ND	< 8.82	ND	< 8.10	ND
	Emission Rate	lbs/hr	< 1.90E-05	ND	< 1.93E-05	ND	< 1.98E-05	ND	< 1.94E-05	ND
	Emission Rate	g/s	< 2.39E-06	ND	< 2.43E-06	ND	< 2.49E-06	ND	< 2.44E-06	ND
2,6-Dichlorophenol	Total Catch	ug	< 30	ND	< 30	ND	< 30	ND	< 30	ND
	Concentration	ug/dscm	< 7.51	ND	< 7.98	ND	< 8.82	ND	< 8.10	ND
	Emission Rate	lbs/hr	< 1.90E-05	ND	< 1.93E-05	ND	< 1.98E-05	ND	< 1.94E-05	ND
	Emission Rate	g/s	< 2.39E-06	ND	< 2.43E-06	ND	< 2.49E-06	ND	< 2.44E-06	ND
Diethyl phthalate	Total Catch	ug	< 30	ND	< 30	ND	< 30	ND	< 30	ND
	Concentration	ug/dscm	< 7.51	ND	< 7.98	ND	< 8.82	ND	< 8.10	ND
	Emission Rate	lbs/hr	< 1.90E-05	ND	< 1.93E-05	ND	< 1.98E-05	ND	< 1.94E-05	ND
	Emission Rate	g/s	< 2.39E-06	ND	< 2.43E-06	ND	< 2.49E-06	ND	< 2.44E-06	ND
Dihydrosafrole	Total Catch	ug	NOT FOUND		NOT FOUND		NOT FOUND		NOT FOUND	
	Concentration	ug/dscm								
	Emission Rate	lbs/hr								
	Emission Rate	g/s								
p-Dimethylaminoazobenzene	Total Catch	ug	< 60	ND	< 60	ND	< 60	ND	< 60	ND
	Concentration	ug/dscm	< 15.02	ND	< 15.96	ND	< 17.65	ND	< 16.21	ND
	Emission Rate	lbs/hr	< 3.80E-05	ND	< 3.86E-05	ND	< 3.95E-05	ND	< 3.87E-05	ND
	Emission Rate	g/s	< 4.79E-06	ND	< 4.86E-06	ND	< 4.98E-06	ND	< 4.88E-06	ND

Table 8-4: Semivolatile Organic Emissions Summary (Continued)

Parameter		Units	C4bR1		C4bR4		C4bR5		Average	
7,12-Dimethylbenz(a)-anthracene	Total Catch	ug	< 60	ND	< 60	ND	< 60	ND	< 60	ND
	Concentration	ug/dscm	< 15.02	ND	< 15.96	ND	< 17.65	ND	< 16.21	ND
	Emission Rate	lbs/hr	< 3.80E-05	ND	< 3.86E-05	ND	< 3.95E-05	ND	< 3.87E-05	ND
	Emission Rate	g/s	< 4.79E-06	ND	< 4.86E-06	ND	< 4.98E-06	ND	< 4.88E-06	ND
3,3'-Dimethylbenzidine	Total Catch	ug	< 150	ND	< 150	ND	< 150	ND	< 150	ND
	Concentration	ug/dscm	< 37.55	ND	< 39.90	ND	< 44.12	ND	< 40.52	ND
	Emission Rate	lbs/hr	< 9.52E-05	ND	< 9.64E-05	ND	< 9.88E-05	ND	< 9.68E-05	ND
	Emission Rate	g/s	< 1.20E-05	ND	< 1.21E-05	ND	< 1.25E-05	ND	< 1.22E-05	ND
a,a-Dimethylphenethyl-amine	Total Catch	ug	< 150	ND	< 150	ND	< 150	ND	< 150	ND
	Concentration	ug/dscm	< 37.55	ND	< 39.90	ND	< 44.12	ND	< 40.52	ND
	Emission Rate	lbs/hr	< 9.52E-05	ND	< 9.64E-05	ND	< 9.88E-05	ND	< 9.68E-05	ND
	Emission Rate	g/s	< 1.20E-05	ND	< 1.21E-05	ND	< 1.25E-05	ND	< 1.22E-05	ND
2,4-Dimethylphenol	Total Catch	ug	< 30	ND	< 30	ND	< 30	ND	< 30	ND
	Concentration	ug/dscm	< 7.51	ND	< 7.98	ND	< 8.82	ND	< 8.10	ND
	Emission Rate	lbs/hr	< 1.90E-05	ND	< 1.93E-05	ND	< 1.98E-05	ND	< 1.94E-05	ND
	Emission Rate	g/s	< 2.39E-06	ND	< 2.43E-06	ND	< 2.49E-06	ND	< 2.44E-06	ND
Dimethyl phthalate	Total Catch	ug	< 30	ND	< 30	ND	< 30	ND	< 30	ND
	Concentration	ug/dscm	< 7.51	ND	< 7.98	ND	< 8.82	ND	< 8.10	ND
	Emission Rate	lbs/hr	< 1.90E-05	ND	< 1.93E-05	ND	< 1.98E-05	ND	< 1.94E-05	ND
	Emission Rate	g/s	< 2.39E-06	ND	< 2.43E-06	ND	< 2.49E-06	ND	< 2.44E-06	ND
1,3-Dinitrobenzene	Total Catch	ug	< 30	ND	< 30	ND	< 30	ND	< 30	ND
	Concentration	ug/dscm	< 7.51	ND	< 7.98	ND	< 8.82	ND	< 8.10	ND
	Emission Rate	lbs/hr	< 1.90E-05	ND	< 1.93E-05	ND	< 1.98E-05	ND	< 1.94E-05	ND
	Emission Rate	g/s	< 2.39E-06	ND	< 2.43E-06	ND	< 2.49E-06	ND	< 2.44E-06	ND
4,6-Dinitro-2-methylphenol	Total Catch	ug	< 150	ND	< 150	ND	< 150	ND	< 150	ND
	Concentration	ug/dscm	< 37.55	ND	< 39.90	ND	< 44.12	ND	< 40.52	ND
	Emission Rate	lbs/hr	< 9.52E-05	ND	< 9.64E-05	ND	< 9.88E-05	ND	< 9.68E-05	ND
	Emission Rate	g/s	< 1.20E-05	ND	< 1.21E-05	ND	< 1.25E-05	ND	< 1.22E-05	ND
2,4-Dinitrophenol	Total Catch	ug	< 150	ND	< 150	ND	< 150	ND	< 150	ND
	Concentration	ug/dscm	< 37.55	ND	< 39.90	ND	< 44.12	ND	< 40.52	ND
	Emission Rate	lbs/hr	< 9.52E-05	ND	< 9.64E-05	ND	< 9.88E-05	ND	< 9.68E-05	ND
	Emission Rate	g/s	< 1.20E-05	ND	< 1.21E-05	ND	< 1.25E-05	ND	< 1.22E-05	ND
2,4-Dinitrotoluene	Total Catch	ug	< 30	ND	< 30	ND	< 33		< 31	
	Concentration	ug/dscm	< 7.51	ND	< 7.98	ND	< 9.71		< 8.40	
	Emission Rate	lbs/hr	< 1.90E-05	ND	< 1.93E-05	ND	< 2.17E-05		< 2.00E-05	
	Emission Rate	g/s	< 2.39E-06	ND	< 2.43E-06	ND	< 2.74E-06		< 2.52E-06	

Table 8-4: Semivolatile Organic Emissions Summary (Continued)

Parameter		Units	C4bR1	C4bR4	C4bR5	Average
2,6-Dinitrotoluene	Total Catch	ug	< 30 ND	< 30 ND	< 30 ND	< 30 ND
	Concentration	ug/dscm	< 7.51 ND	< 7.98 ND	< 8.82 ND	< 8.10 ND
	Emission Rate	lbs/hr	< 1.90E-05 ND	< 1.93E-05 ND	< 1.98E-05 ND	< 1.94E-05 ND
	Emission Rate	g/s	< 2.39E-06 ND	< 2.43E-06 ND	< 2.49E-06 ND	< 2.44E-06 ND
Dioxathion	Total Catch	ug	NOT FOUND	NOT FOUND	NOT FOUND	NOT FOUND
	Concentration	ug/dscm				
	Emission Rate	lbs/hr				
	Emission Rate	g/s				
Diphenylamine	Total Catch	ug	< 30 ND	< 30 ND	< 30 ND	< 30 ND
	Concentration	ug/dscm	< 7.51 ND	< 7.98 ND	< 8.82 ND	< 8.10 ND
	Emission Rate	lbs/hr	< 1.90E-05 ND	< 1.93E-05 ND	< 1.98E-05 ND	< 1.94E-05 ND
	Emission Rate	g/s	< 2.39E-06 ND	< 2.43E-06 ND	< 2.49E-06 ND	< 2.44E-06 ND
1,2-Diphenylhydrazine	Total Catch	ug	< 30 ND	< 30 ND	< 30 ND	< 30 ND
	Concentration	ug/dscm	< 7.51 ND	< 7.98 ND	< 8.82 ND	< 8.10 ND
	Emission Rate	lbs/hr	< 1.90E-05 ND	< 1.93E-05 ND	< 1.98E-05 ND	< 1.94E-05 ND
	Emission Rate	g/s	< 2.39E-06 ND	< 2.43E-06 ND	< 2.49E-06 ND	< 2.44E-06 ND
Di-n-octyl phthalate	Total Catch	ug	< 30 ND	< 30 ND	< 30 ND	< 30 ND
	Concentration	ug/dscm	< 7.51 ND	< 7.98 ND	< 8.82 ND	< 8.10 ND
	Emission Rate	lbs/hr	< 1.90E-05 ND	< 1.93E-05 ND	< 1.98E-05 ND	< 1.94E-05 ND
	Emission Rate	g/s	< 2.39E-06 ND	< 2.43E-06 ND	< 2.49E-06 ND	< 2.44E-06 ND
Ethyl methanesulfonate	Total Catch	ug	< 30 ND	< 30 ND	< 30 ND	< 30 ND
	Concentration	ug/dscm	< 7.51 ND	< 7.98 ND	< 8.82 ND	< 8.10 ND
	Emission Rate	lbs/hr	< 1.90E-05 ND	< 1.93E-05 ND	< 1.98E-05 ND	< 1.94E-05 ND
	Emission Rate	g/s	< 2.39E-06 ND	< 2.43E-06 ND	< 2.49E-06 ND	< 2.44E-06 ND
Ethyl parathion	Total Catch	ug	< 150 ND	< 150 ND	< 150 ND	< 150 ND
	Concentration	ug/dscm	< 37.55 ND	< 39.90 ND	< 44.12 ND	< 40.52 ND
	Emission Rate	lbs/hr	< 9.52E-05 ND	< 9.64E-05 ND	< 9.88E-05 ND	< 9.68E-05 ND
	Emission Rate	g/s	< 1.20E-05 ND	< 1.21E-05 ND	< 1.25E-05 ND	< 1.22E-05 ND
Fluoranthene	Total Catch	ug	< 30 ND	< 30 ND	< 30 ND	< 30 ND
	Concentration	ug/dscm	< 7.51 ND	< 7.98 ND	< 8.82 ND	< 8.10 ND
	Emission Rate	lbs/hr	< 1.90E-05 ND	< 1.93E-05 ND	< 1.98E-05 ND	< 1.94E-05 ND
	Emission Rate	g/s	< 2.39E-06 ND	< 2.43E-06 ND	< 2.49E-06 ND	< 2.44E-06 ND
Fluorene	Total Catch	ug	< 30 ND	< 30 ND	< 30 ND	< 30 ND
	Concentration	ug/dscm	< 7.51 ND	< 7.98 ND	< 8.82 ND	< 8.10 ND
	Emission Rate	lbs/hr	< 1.90E-05 ND	< 1.93E-05 ND	< 1.98E-05 ND	< 1.94E-05 ND
	Emission Rate	g/s	< 2.39E-06 ND	< 2.43E-06 ND	< 2.49E-06 ND	< 2.44E-06 ND

Table 8-4: Semivolatile Organic Emissions Summary (Continued)

Parameter		Units	C4bR1		C4bR4		C4bR5		Average	
Heptachlor	Total Catch	ug	NOT FOUND		NOT FOUND		NOT FOUND		NOT FOUND	
	Concentration	ug/dscm								
	Emission Rate	lbs/hr								
	Emission Rate	g/s								
Hexachlorobenzene	Total Catch	ug	< 30	ND	< 30	ND	< 30	ND	< 30	ND
	Concentration	ug/dscm	< 7.51	ND	< 7.98	ND	< 8.82	ND	< 8.10	ND
	Emission Rate	lbs/hr	< 1.90E-05	ND	< 1.93E-05	ND	< 1.98E-05	ND	< 1.94E-05	ND
	Emission Rate	g/s	< 2.39E-06	ND	< 2.43E-06	ND	< 2.49E-06	ND	< 2.44E-06	ND
Hexachlorobutadiene	Total Catch	ug	< 30	ND	< 30	ND	< 30	ND	< 30	ND
	Concentration	ug/dscm	< 7.51	ND	< 7.98	ND	< 8.82	ND	< 8.10	ND
	Emission Rate	lbs/hr	< 1.90E-05	ND	< 1.93E-05	ND	< 1.98E-05	ND	< 1.94E-05	ND
	Emission Rate	g/s	< 2.39E-06	ND	< 2.43E-06	ND	< 2.49E-06	ND	< 2.44E-06	ND
Hexachlorocyclopentadiene	Total Catch	ug	< 150	ND	< 150	ND	< 150	ND	< 150	ND
	Concentration	ug/dscm	< 37.55	ND	< 39.90	ND	< 44.12	ND	< 40.52	ND
	Emission Rate	lbs/hr	< 9.52E-05	ND	< 9.64E-05	ND	< 9.88E-05	ND	< 9.68E-05	ND
	Emission Rate	g/s	< 1.20E-05	ND	< 1.21E-05	ND	< 1.25E-05	ND	< 1.22E-05	ND
Hexachloroethane	Total Catch	ug	< 30	ND	< 30	ND	< 30	ND	< 30	ND
	Concentration	ug/dscm	< 7.51	ND	< 7.98	ND	< 8.82	ND	< 8.10	ND
	Emission Rate	lbs/hr	< 1.90E-05	ND	< 1.93E-05	ND	< 1.98E-05	ND	< 1.94E-05	ND
	Emission Rate	g/s	< 2.39E-06	ND	< 2.43E-06	ND	< 2.49E-06	ND	< 2.44E-06	ND
Hexachlorophene	Total Catch	ug	NOT FOUND		NOT FOUND		NOT FOUND		NOT FOUND	
	Concentration	ug/dscm								
	Emission Rate	lbs/hr								
	Emission Rate	g/s								
Hexachloropropene	Total Catch	ug	< 30	ND	< 30	ND	< 30	ND	< 30	ND
	Concentration	ug/dscm	< 7.51	ND	< 7.98	ND	< 8.82	ND	< 8.10	ND
	Emission Rate	lbs/hr	< 1.90E-05	ND	< 1.93E-05	ND	< 1.98E-05	ND	< 1.94E-05	ND
	Emission Rate	g/s	< 2.39E-06	ND	< 2.43E-06	ND	< 2.49E-06	ND	< 2.44E-06	ND
Indeno(1,2,3-cd)pyrene	Total Catch	ug	< 30	ND	< 30	ND	< 30	ND	< 30	ND
	Concentration	ug/dscm	< 7.51	ND	< 7.98	ND	< 8.82	ND	< 8.10	ND
	Emission Rate	lbs/hr	< 1.90E-05	ND	< 1.93E-05	ND	< 1.98E-05	ND	< 1.94E-05	ND
	Emission Rate	g/s	< 2.39E-06	ND	< 2.43E-06	ND	< 2.49E-06	ND	< 2.44E-06	ND
Isophorone	Total Catch	ug	< 30	ND	< 30	ND	< 30	ND	< 30	ND
	Concentration	ug/dscm	< 7.51	ND	< 7.98	ND	< 8.82	ND	< 8.10	ND
	Emission Rate	lbs/hr	< 1.90E-05	ND	< 1.93E-05	ND	< 1.98E-05	ND	< 1.94E-05	ND
	Emission Rate	g/s	< 2.39E-06	ND	< 2.43E-06	ND	< 2.49E-06	ND	< 2.44E-06	ND

Table 8-4: Semivolatile Organic Emissions Summary (Continued)

Parameter		Units	C4bR1		C4bR4		C4bR5		Average	
Isosafrole	Total Catch	ug	< 60	ND	< 60	ND	< 60	ND	< 60	ND
	Concentration	ug/dscm	< 15.02	ND	< 15.96	ND	< 17.65	ND	< 16.21	ND
	Emission Rate	lbs/hr	< 3.80E-05	ND	< 3.86E-05	ND	< 3.95E-05	ND	< 3.87E-05	ND
	Emission Rate	g/s	< 4.79E-06	ND	< 4.86E-06	ND	< 4.98E-06	ND	< 4.88E-06	ND
Methapyrilene	Total Catch	ug	< 150	ND	< 150	ND	< 150	ND	< 150	ND
	Concentration	ug/dscm	< 37.55	ND	< 39.90	ND	< 44.12	ND	< 40.52	ND
	Emission Rate	lbs/hr	< 9.52E-05	ND	< 9.64E-05	ND	< 9.88E-05	ND	< 9.68E-05	ND
	Emission Rate	g/s	< 1.20E-05	ND	< 1.21E-05	ND	< 1.25E-05	ND	< 1.22E-05	ND
Methoxychlor	Total Catch	ug	NOT FOUND		NOT FOUND		NOT FOUND		NOT FOUND	
	Concentration	ug/dscm								
	Emission Rate	lbs/hr								
	Emission Rate	g/s								
Methylcyclohexane	Total Catch	ug	NOT FOUND		NOT FOUND		NOT FOUND		NOT FOUND	
	Concentration	ug/dscm								
	Emission Rate	lbs/hr								
	Emission Rate	g/s								
3-Methylcholanthrene	Total Catch	ug	< 60	ND	< 60	ND	< 60	ND	< 60	ND
	Concentration	ug/dscm	< 15.02	ND	< 15.96	ND	< 17.65	ND	< 16.21	ND
	Emission Rate	lbs/hr	< 3.80E-05	ND	< 3.86E-05	ND	< 3.95E-05	ND	< 3.87E-05	ND
	Emission Rate	g/s	< 4.79E-06	ND	< 4.86E-06	ND	< 4.98E-06	ND	< 4.88E-06	ND
Methyl methanesulfonate	Total Catch	ug	< 30	ND	< 30	ND	< 30	ND	< 30	ND
	Concentration	ug/dscm	< 7.51	ND	< 7.98	ND	< 8.82	ND	< 8.10	ND
	Emission Rate	lbs/hr	< 1.90E-05	ND	< 1.93E-05	ND	< 1.98E-05	ND	< 1.94E-05	ND
	Emission Rate	g/s	< 2.39E-06	ND	< 2.43E-06	ND	< 2.49E-06	ND	< 2.44E-06	ND
2-Methylnapthalene	Total Catch	ug	< 30	ND	< 30	ND	< 30	ND	< 30	ND
	Concentration	ug/dscm	< 7.51	ND	< 7.98	ND	< 8.82	ND	< 8.10	ND
	Emission Rate	lbs/hr	< 1.90E-05	ND	< 1.93E-05	ND	< 1.98E-05	ND	< 1.94E-05	ND
	Emission Rate	g/s	< 2.39E-06	ND	< 2.43E-06	ND	< 2.49E-06	ND	< 2.44E-06	ND
2-Methyl-5-nitroaniline	Total Catch	ug	< 60	ND	< 60	ND	< 60	ND	< 60	ND
	Concentration	ug/dscm	< 15.02	ND	< 15.96	ND	< 17.65	ND	< 16.21	ND
	Emission Rate	lbs/hr	< 3.80E-05	ND	< 3.86E-05	ND	< 3.95E-05	ND	< 3.87E-05	ND
	Emission Rate	g/s	< 4.79E-06	ND	< 4.86E-06	ND	< 4.98E-06	ND	< 4.88E-06	ND
2-Methylphenol (o-Cresol)	Total Catch	ug	< 30	ND	< 30	ND	< 30	ND	< 30	ND
	Concentration	ug/dscm	< 7.51	ND	< 7.98	ND	< 8.82	ND	< 8.10	ND
	Emission Rate	lbs/hr	< 1.90E-05	ND	< 1.93E-05	ND	< 1.98E-05	ND	< 1.94E-05	ND
	Emission Rate	g/s	< 2.39E-06	ND	< 2.43E-06	ND	< 2.49E-06	ND	< 2.44E-06	ND

Table 8-4: Semivolatile Organic Emissions Summary (Continued)

Parameter		Units	C4bR1		C4bR4		C4bR5		Average	
3-Methylphenol (m-Cresol)	Total Catch	ug	< 150	ND	< 150	ND	< 150	ND	< 150	ND
	Concentration	ug/dscm	< 37.55	ND	< 39.90	ND	< 44.12	ND	< 40.52	ND
	Emission Rate	lbs/hr	< 9.52E-05	ND	< 9.64E-05	ND	< 9.88E-05	ND	< 9.68E-05	ND
	Emission Rate	g/s	< 1.20E-05	ND	< 1.21E-05	ND	< 1.25E-05	ND	< 1.22E-05	ND
Diisopropylmethylphosphonate	Total Catch	ug	NOT FOUND		NOT FOUND		NOT FOUND		NOT FOUND	
	Concentration	ug/dscm								
	Emission Rate	lbs/hr								
	Emission Rate	g/s								
4-Methylphenol (p-Cresol)	Total Catch	ug	< 30	ND	< 30	ND	< 30	ND	< 30	ND
	Concentration	ug/dscm	< 7.51	ND	< 7.98	ND	< 8.82	ND	< 8.10	ND
	Emission Rate	lbs/hr	< 1.90E-05	ND	< 1.93E-05	ND	< 1.98E-05	ND	< 1.94E-05	ND
	Emission Rate	g/s	< 2.39E-06	ND	< 2.43E-06	ND	< 2.49E-06	ND	< 2.44E-06	ND
Pentachloroethane	Total Catch	ug	< 150	ND	< 150	ND	< 150	ND	< 150	ND
	Concentration	ug/dscm	< 37.55	ND	< 39.90	ND	< 44.12	ND	< 40.52	ND
	Emission Rate	lbs/hr	< 9.52E-05	ND	< 9.64E-05	ND	< 9.88E-05	ND	< 9.68E-05	ND
	Emission Rate	g/s	< 1.20E-05	ND	< 1.21E-05	ND	< 1.25E-05	ND	< 1.22E-05	ND
Naphthalene	Total Catch	ug	< 30	ND	< 30	ND	< 30	ND	< 30	ND
	Concentration	ug/dscm	< 7.51	ND	< 7.98	ND	< 8.82	ND	< 8.10	ND
	Emission Rate	lbs/hr	< 1.90E-05	ND	< 1.93E-05	ND	< 1.98E-05	ND	< 1.94E-05	ND
	Emission Rate	g/s	< 2.39E-06	ND	< 2.43E-06	ND	< 2.49E-06	ND	< 2.44E-06	ND
1,4-Naphthoquinone	Total Catch	ug	< 150	ND	< 150	ND	< 150	ND	< 150	ND
	Concentration	ug/dscm	< 37.55	ND	< 39.90	ND	< 44.12	ND	< 40.52	ND
	Emission Rate	lbs/hr	< 9.52E-05	ND	< 9.64E-05	ND	< 9.88E-05	ND	< 9.68E-05	ND
	Emission Rate	g/s	< 1.20E-05	ND	< 1.21E-05	ND	< 1.25E-05	ND	< 1.22E-05	ND
1-Napthylamine	Total Catch	ug	< 30	ND	< 30	ND	< 30	ND	< 30	ND
	Concentration	ug/dscm	< 7.51	ND	< 7.98	ND	< 8.82	ND	< 8.10	ND
	Emission Rate	lbs/hr	< 1.90E-05	ND	< 1.93E-05	ND	< 1.98E-05	ND	< 1.94E-05	ND
	Emission Rate	g/s	< 2.39E-06	ND	< 2.43E-06	ND	< 2.49E-06	ND	< 2.44E-06	ND
2-Napthylamine	Total Catch	ug	< 30	ND	< 30	ND	< 30	ND	< 30	ND
	Concentration	ug/dscm	< 7.51	ND	< 7.98	ND	< 8.82	ND	< 8.10	ND
	Emission Rate	lbs/hr	< 1.90E-05	ND	< 1.93E-05	ND	< 1.98E-05	ND	< 1.94E-05	ND
	Emission Rate	g/s	< 2.39E-06	ND	< 2.43E-06	ND	< 2.49E-06	ND	< 2.44E-06	ND
5-Nitroacenaphthene	Total Catch	ug	NOT FOUND		NOT FOUND		NOT FOUND		NOT FOUND	
	Concentration	ug/dscm								
	Emission Rate	lbs/hr								
	Emission Rate	g/s								

Table 8-4: Semivolatile Organic Emissions Summary (Continued)

Parameter		Units	C4bR1		C4bR4		C4bR5		Average	
2-Nitroaniline	Total Catch	ug	< 150	ND	< 150	ND	< 150	ND	< 150	ND
	Concentration	ug/dscm	< 37.55	ND	< 39.90	ND	< 44.12	ND	< 40.52	ND
	Emission Rate	lbs/hr	< 9.52E-05	ND	< 9.64E-05	ND	< 9.88E-05	ND	< 9.68E-05	ND
	Emission Rate	g/s	< 1.20E-05	ND	< 1.21E-05	ND	< 1.25E-05	ND	< 1.22E-05	ND
3-Nitroaniline	Total Catch	ug	< 150	ND	< 150	ND	< 150	ND	< 150	ND
	Concentration	ug/dscm	< 37.55	ND	< 39.90	ND	< 44.12	ND	< 40.52	ND
	Emission Rate	lbs/hr	< 9.52E-05	ND	< 9.64E-05	ND	< 9.88E-05	ND	< 9.68E-05	ND
	Emission Rate	g/s	< 1.20E-05	ND	< 1.21E-05	ND	< 1.25E-05	ND	< 1.22E-05	ND
4-Nitroaniline	Total Catch	ug	< 150	ND	< 150	ND	< 150	ND	< 150	ND
	Concentration	ug/dscm	< 37.55	ND	< 39.90	ND	< 44.12	ND	< 40.52	ND
	Emission Rate	lbs/hr	< 9.52E-05	ND	< 9.64E-05	ND	< 9.88E-05	ND	< 9.68E-05	ND
	Emission Rate	g/s	< 1.20E-05	ND	< 1.21E-05	ND	< 1.25E-05	ND	< 1.22E-05	ND
Nitrobenzene	Total Catch	ug	< 30	ND	< 30	ND	< 30	ND	< 30	ND
	Concentration	ug/dscm	< 7.51	ND	< 7.98	ND	< 8.82	ND	< 8.10	ND
	Emission Rate	lbs/hr	< 1.90E-05	ND	< 1.93E-05	ND	< 1.98E-05	ND	< 1.94E-05	ND
	Emission Rate	g/s	< 2.39E-06	ND	< 2.43E-06	ND	< 2.49E-06	ND	< 2.44E-06	ND
2-Nitrophenol	Total Catch	ug	< 30	ND	< 30	ND	< 30	ND	< 30	ND
	Concentration	ug/dscm	< 7.51	ND	< 7.98	ND	< 8.82	ND	< 8.10	ND
	Emission Rate	lbs/hr	< 1.90E-05	ND	< 1.93E-05	ND	< 1.98E-05	ND	< 1.94E-05	ND
	Emission Rate	g/s	< 2.39E-06	ND	< 2.43E-06	ND	< 2.49E-06	ND	< 2.44E-06	ND
4-Nitrophenol	Total Catch	ug	< 150	ND	< 150	ND	< 150	ND	< 150	ND
	Concentration	ug/dscm	< 37.55	ND	< 39.90	ND	< 44.12	ND	< 40.52	ND
	Emission Rate	lbs/hr	< 9.52E-05	ND	< 9.64E-05	ND	< 9.88E-05	ND	< 9.68E-05	ND
	Emission Rate	g/s	< 1.20E-05	ND	< 1.21E-05	ND	< 1.25E-05	ND	< 1.22E-05	ND
4-Nitroquinoline-l-oxide	Total Catch	ug	< 300	ND	< 300	ND	< 300	ND	< 300	ND
	Concentration	ug/dscm	< 75.10	ND	< 79.81	ND	< 88.24	ND	< 81.05	ND
	Emission Rate	lbs/hr	< 1.90E-04	ND	< 1.93E-04	ND	< 1.98E-04	ND	< 1.94E-04	ND
	Emission Rate	g/s	< 2.39E-05	ND	< 2.43E-05	ND	< 2.49E-05	ND	< 2.44E-05	ND
N-Nitroso-di-n-butylamine	Total Catch	ug	< 30	ND	< 30	ND	< 30	ND	< 30	ND
	Concentration	ug/dscm	< 7.51	ND	< 7.98	ND	< 8.82	ND	< 8.10	ND
	Emission Rate	lbs/hr	< 1.90E-05	ND	< 1.93E-05	ND	< 1.98E-05	ND	< 1.94E-05	ND
	Emission Rate	g/s	< 2.39E-06	ND	< 2.43E-06	ND	< 2.49E-06	ND	< 2.44E-06	ND
N-Nitrosodiethylamine	Total Catch	ug	< 30	ND	< 30	ND	< 30	ND	< 30	ND
	Concentration	ug/dscm	< 7.51	ND	< 7.98	ND	< 8.82	ND	< 8.10	ND
	Emission Rate	lbs/hr	< 1.90E-05	ND	< 1.93E-05	ND	< 1.98E-05	ND	< 1.94E-05	ND
	Emission Rate	g/s	< 2.39E-06	ND	< 2.43E-06	ND	< 2.49E-06	ND	< 2.44E-06	ND

Table 8-4: Semivolatile Organic Emissions Summary (Continued)

Parameter		Units	C4bR1		C4bR4		C4bR5		Average	
N-Nitrosodimethylamine	Total Catch	ug	< 30	ND	< 30	ND	< 30	ND	< 30	ND
	Concentration	ug/dscm	< 7.51	ND	< 7.98	ND	< 8.82	ND	< 8.10	ND
	Emission Rate	lbs/hr	< 1.90E-05	ND	< 1.93E-05	ND	< 1.98E-05	ND	< 1.94E-05	ND
	Emission Rate	g/s	< 2.39E-06	ND	< 2.43E-06	ND	< 2.49E-06	ND	< 2.44E-06	ND
N-Nitrosomethylethylamine	Total Catch	ug	< 30	ND	< 30	ND	< 30	ND	< 30	ND
	Concentration	ug/dscm	< 7.51	ND	< 7.98	ND	< 8.82	ND	< 8.10	ND
	Emission Rate	lbs/hr	< 1.90E-05	ND	< 1.93E-05	ND	< 1.98E-05	ND	< 1.94E-05	ND
	Emission Rate	g/s	< 2.39E-06	ND	< 2.43E-06	ND	< 2.49E-06	ND	< 2.44E-06	ND
N-Nitrosodiphenylamine	Total Catch	ug	< 30	ND	< 30	ND	< 30	ND	< 30	ND
	Concentration	ug/dscm	< 7.51	ND	< 7.98	ND	< 8.82	ND	< 8.10	ND
	Emission Rate	lbs/hr	< 1.90E-05	ND	< 1.93E-05	ND	< 1.98E-05	ND	< 1.94E-05	ND
	Emission Rate	g/s	< 2.39E-06	ND	< 2.43E-06	ND	< 2.49E-06	ND	< 2.44E-06	ND
N-Nitroso-di-n-propylamine	Total Catch	ug	< 30	ND	< 30	ND	< 30	ND	< 30	ND
	Concentration	ug/dscm	< 7.51	ND	< 7.98	ND	< 8.82	ND	< 8.10	ND
	Emission Rate	lbs/hr	< 1.90E-05	ND	< 1.93E-05	ND	< 1.98E-05	ND	< 1.94E-05	ND
	Emission Rate	g/s	< 2.39E-06	ND	< 2.43E-06	ND	< 2.49E-06	ND	< 2.44E-06	ND
N-Nitrosomorpholine	Total Catch	ug	< 30	ND	< 30	ND	< 30	ND	< 30	ND
	Concentration	ug/dscm	< 7.51	ND	< 7.98	ND	< 8.82	ND	< 8.10	ND
	Emission Rate	lbs/hr	< 1.90E-05	ND	< 1.93E-05	ND	< 1.98E-05	ND	< 1.94E-05	ND
	Emission Rate	g/s	< 2.39E-06	ND	< 2.43E-06	ND	< 2.49E-06	ND	< 2.44E-06	ND
N-Nitrosopiperidine	Total Catch	ug	< 30	ND	< 30	ND	< 30	ND	< 30	ND
	Concentration	ug/dscm	< 7.51	ND	< 7.98	ND	< 8.82	ND	< 8.10	ND
	Emission Rate	lbs/hr	< 1.90E-05	ND	< 1.93E-05	ND	< 1.98E-05	ND	< 1.94E-05	ND
	Emission Rate	g/s	< 2.39E-06	ND	< 2.43E-06	ND	< 2.49E-06	ND	< 2.44E-06	ND
N-Nitrosopyrrolidine	Total Catch	ug	< 30	ND	< 30	ND	< 30	ND	< 30	ND
	Concentration	ug/dscm	< 7.51	ND	< 7.98	ND	< 8.82	ND	< 8.10	ND
	Emission Rate	lbs/hr	< 1.90E-05	ND	< 1.93E-05	ND	< 1.98E-05	ND	< 1.94E-05	ND
	Emission Rate	g/s	< 2.39E-06	ND	< 2.43E-06	ND	< 2.49E-06	ND	< 2.44E-06	ND
Pentachlorobenzene	Total Catch	ug	< 30	ND	< 30	ND	< 30	ND	< 30	ND
	Concentration	ug/dscm	< 7.51	ND	< 7.98	ND	< 8.82	ND	< 8.10	ND
	Emission Rate	lbs/hr	< 1.90E-05	ND	< 1.93E-05	ND	< 1.98E-05	ND	< 1.94E-05	ND
	Emission Rate	g/s	< 2.39E-06	ND	< 2.43E-06	ND	< 2.49E-06	ND	< 2.44E-06	ND
Pentachloronitrobenzene	Total Catch	ug	< 150	ND	< 150	ND	< 150	ND	< 150	ND
	Concentration	ug/dscm	< 37.55	ND	< 39.90	ND	< 44.12	ND	< 40.52	ND
	Emission Rate	lbs/hr	< 9.52E-05	ND	< 9.64E-05	ND	< 9.88E-05	ND	< 9.68E-05	ND
	Emission Rate	g/s	< 1.20E-05	ND	< 1.21E-05	ND	< 1.25E-05	ND	< 1.22E-05	ND

Table 8-4: Semivolatile Organic Emissions Summary (Continued)

Parameter		Units	C4bR1		C4bR4		C4bR5		Average	
Pentachlorophenol	Total Catch	ug	< 150	ND	< 150	ND	< 150	ND	< 150	ND
	Concentration	ug/dscm	< 37.55	ND	< 39.90	ND	< 44.12	ND	< 40.52	ND
	Emission Rate	lbs/hr	< 9.52E-05	ND	< 9.64E-05	ND	< 9.88E-05	ND	< 9.68E-05	ND
	Emission Rate	g/s	< 1.20E-05	ND	< 1.21E-05	ND	< 1.25E-05	ND	< 1.22E-05	ND
Perylene	Total Catch	ug	NOT FOUND		NOT FOUND		NOT FOUND		NOT FOUND	
	Concentration	ug/dscm								
	Emission Rate	lbs/hr								
	Emission Rate	g/s								
Phenacetin	Total Catch	ug	< 60	ND	< 60	ND	< 60	ND	< 60	ND
	Concentration	ug/dscm	< 15.02	ND	< 15.96	ND	< 17.65	ND	< 16.21	ND
	Emission Rate	lbs/hr	< 3.80E-05	ND	< 3.86E-05	ND	< 3.95E-05	ND	< 3.87E-05	ND
	Emission Rate	g/s	< 4.79E-06	ND	< 4.86E-06	ND	< 4.98E-06	ND	< 4.88E-06	ND
Phenanthrene	Total Catch	ug	< 30	ND	< 30	ND	< 30	ND	< 30	ND
	Concentration	ug/dscm	< 7.51	ND	< 7.98	ND	< 8.82	ND	< 8.10	ND
	Emission Rate	lbs/hr	< 1.90E-05	ND	< 1.93E-05	ND	< 1.98E-05	ND	< 1.94E-05	ND
	Emission Rate	g/s	< 2.39E-06	ND	< 2.43E-06	ND	< 2.49E-06	ND	< 2.44E-06	ND
Phenol	Total Catch	ug	< 150	ND	< 150	ND	< 150	ND	< 150	ND
	Concentration	ug/dscm	< 37.55	ND	< 39.90	ND	< 44.12	ND	< 40.52	ND
	Emission Rate	lbs/hr	< 9.52E-05	ND	< 9.64E-05	ND	< 9.88E-05	ND	< 9.68E-05	ND
	Emission Rate	g/s	< 1.20E-05	ND	< 1.21E-05	ND	< 1.25E-05	ND	< 1.22E-05	ND
1,4-Phenylenediamine	Total Catch	ug	< 300	ND	< 300	ND	< 300	ND	< 300	ND
	Concentration	ug/dscm	< 75.10	ND	< 79.81	ND	< 88.24	ND	< 81.05	ND
	Emission Rate	lbs/hr	< 1.90E-04	ND	< 1.93E-04	ND	< 1.98E-04	ND	< 1.94E-04	ND
	Emission Rate	g/s	< 2.39E-05	ND	< 2.43E-05	ND	< 2.49E-05	ND	< 2.44E-05	ND
2-Picoline	Total Catch	ug	< 60	ND	< 60	ND	< 60	ND	< 60	ND
	Concentration	ug/dscm	< 15.02	ND	< 15.96	ND	< 17.65	ND	< 16.21	ND
	Emission Rate	lbs/hr	< 3.80E-05	ND	< 3.86E-05	ND	< 3.95E-05	ND	< 3.87E-05	ND
	Emission Rate	g/s	< 4.79E-06	ND	< 4.86E-06	ND	< 4.98E-06	ND	< 4.88E-06	ND
Pronamide	Total Catch	ug	< 60	ND	< 60	ND	< 60	ND	< 60	ND
	Concentration	ug/dscm	< 15.02	ND	< 15.96	ND	< 17.65	ND	< 16.21	ND
	Emission Rate	lbs/hr	< 3.80E-05	ND	< 3.86E-05	ND	< 3.95E-05	ND	< 3.87E-05	ND
	Emission Rate	g/s	< 4.79E-06	ND	< 4.86E-06	ND	< 4.98E-06	ND	< 4.88E-06	ND
Pyrene	Total Catch	ug	< 30	ND	< 30	ND	< 30	ND	< 30	ND
	Concentration	ug/dscm	< 7.51	ND	< 7.98	ND	< 8.82	ND	< 8.10	ND
	Emission Rate	lbs/hr	< 1.90E-05	ND	< 1.93E-05	ND	< 1.98E-05	ND	< 1.94E-05	ND
	Emission Rate	g/s	< 2.39E-06	ND	< 2.43E-06	ND	< 2.49E-06	ND	< 2.44E-06	ND

Table 8-4: Semivolatile Organic Emissions Summary (Continued)

Parameter		Units	C4bR1		C4bR4		C4bR5		Average	
Pyridine	Total Catch	ug	< 60	ND	< 60	ND	< 60	ND	< 60	ND
	Concentration	ug/dscm	< 15.02	ND	< 15.96	ND	< 17.65	ND	< 16.21	ND
	Emission Rate	lbs/hr	< 3.80E-05	ND	< 3.86E-05	ND	< 3.95E-05	ND	< 3.87E-05	ND
	Emission Rate	g/s	< 4.79E-06	ND	< 4.86E-06	ND	< 4.98E-06	ND	< 4.88E-06	ND
Quinoline	Total Catch	ug	NOT FOUND		NOT FOUND		NOT FOUND		NOT FOUND	
	Concentration	ug/dscm								
	Emission Rate	lbs/hr								
	Emission Rate	g/s								
Safrole	Total Catch	ug	< 60	ND	< 60	ND	< 60	ND	< 60	ND
	Concentration	ug/dscm	< 15.02	ND	< 15.96	ND	< 17.65	ND	< 16.21	ND
	Emission Rate	lbs/hr	< 3.80E-05	ND	< 3.86E-05	ND	< 3.95E-05	ND	< 3.87E-05	ND
	Emission Rate	g/s	< 4.79E-06	ND	< 4.86E-06	ND	< 4.98E-06	ND	< 4.88E-06	ND
1,2,4,5-Tetrachloro-benzene	Total Catch	ug	< 30	ND	< 30	ND	< 30	ND	< 30	ND
	Concentration	ug/dscm	< 7.51	ND	< 7.98	ND	< 8.82	ND	< 8.10	ND
	Emission Rate	lbs/hr	< 1.90E-05	ND	< 1.93E-05	ND	< 1.98E-05	ND	< 1.94E-05	ND
	Emission Rate	g/s	< 2.39E-06	ND	< 2.43E-06	ND	< 2.49E-06	ND	< 2.44E-06	ND
2,3,4,6-Tetrachlorophenol	Total Catch	ug	< 150	ND	< 150	ND	< 150	ND	< 150	ND
	Concentration	ug/dscm	< 37.55	ND	< 39.90	ND	< 44.12	ND	< 40.52	ND
	Emission Rate	lbs/hr	< 9.52E-05	ND	< 9.64E-05	ND	< 9.88E-05	ND	< 9.68E-05	ND
	Emission Rate	g/s	< 1.20E-05	ND	< 1.21E-05	ND	< 1.25E-05	ND	< 1.22E-05	ND
o-Toluidine	Total Catch	ug	< 30	ND	< 30	ND	< 30	ND	< 30	ND
	Concentration	ug/dscm	< 7.51	ND	< 7.98	ND	< 8.82	ND	< 8.10	ND
	Emission Rate	lbs/hr	< 1.90E-05	ND	< 1.93E-05	ND	< 1.98E-05	ND	< 1.94E-05	ND
	Emission Rate	g/s	< 2.39E-06	ND	< 2.43E-06	ND	< 2.49E-06	ND	< 2.44E-06	ND
p-Toluidine	Total Catch	ug	NOT FOUND		NOT FOUND		NOT FOUND		NOT FOUND	
	Concentration	ug/dscm								
	Emission Rate	lbs/hr								
	Emission Rate	g/s								
1,2,4-Trichlorobenzene	Total Catch	ug	< 30	ND	< 30	ND	< 30	ND	< 30	ND
	Concentration	ug/dscm	< 7.51	ND	< 7.98	ND	< 8.82	ND	< 8.10	ND
	Emission Rate	lbs/hr	< 1.90E-05	ND	< 1.93E-05	ND	< 1.98E-05	ND	< 1.94E-05	ND
	Emission Rate	g/s	< 2.39E-06	ND	< 2.43E-06	ND	< 2.49E-06	ND	< 2.44E-06	ND
2,4,5-Trichlorophenol	Total Catch	ug	< 30	ND	< 30	ND	< 30	ND	< 30	ND
	Concentration	ug/dscm	< 7.51	ND	< 7.98	ND	< 8.82	ND	< 8.10	ND
	Emission Rate	lbs/hr	< 1.90E-05	ND	< 1.93E-05	ND	< 1.98E-05	ND	< 1.94E-05	ND
	Emission Rate	g/s	< 2.39E-06	ND	< 2.43E-06	ND	< 2.49E-06	ND	< 2.44E-06	ND

Table 8-4: Semivolatile Organic Emissions Summary (Continued)

Parameter		Units	C4bR1	C4bR4	C4bR5	Average
2,4,6-Trichlorophenol	Total Catch	ug	< 150 ND	< 150 ND	< 150 ND	< 150 ND
	Concentration	ug/dscm	< 37.55 ND	< 39.90 ND	< 44.12 ND	< 40.52 ND
	Emission Rate	lbs/hr	< 9.52E-05 ND	< 9.64E-05 ND	< 9.88E-05 ND	< 9.68E-05 ND
	Emission Rate	g/s	< 1.20E-05 ND	< 1.21E-05 ND	< 1.25E-05 ND	< 1.22E-05 ND
1,3,5-Trinitrobenzene	Total Catch	ug	< 150 ND	< 150 ND	< 150 ND	< 150 ND
	Concentration	ug/dscm	< 37.55 ND	< 39.90 ND	< 44.12 ND	< 40.52 ND
	Emission Rate	lbs/hr	< 9.52E-05 ND	< 9.64E-05 ND	< 9.88E-05 ND	< 9.68E-05 ND
	Emission Rate	g/s	< 1.20E-05 ND	< 1.21E-05 ND	< 1.25E-05 ND	< 1.22E-05 ND
Tributylamine	Total Catch	ug	NOT FOUND	NOT FOUND	NOT FOUND	NOT FOUND
	Concentration	ug/dscm				
	Emission Rate	lbs/hr				
	Emission Rate	g/s				
Butanoic acid, methyl ester	Total Catch	ug	11.1	6.4	11	9.5
TIC: 623-42-7	Concentration	ug/dscm	2.78	1.70	3.24	2.57
	Emission Rate	lbs/hr	7.03E-06	4.11E-06	7.25E-06	6.13E-06
	Emission Rate	g/s	8.85E-07	5.18E-07	9.13E-07	7.72E-07
Toluene	Total Catch	ug	105.2	44.7	173	107.63
TIC: 108-88-3	Concentration	ug/dscm	26.33	11.89	50.88	29.70
	Emission Rate	lbs/hr	6.66E-05	2.87E-05	1.14E-04	6.98E-05
	Emission Rate	g/s	8.39E-06	3.62E-06	1.44E-05	8.79E-06
Dimethyl sulfoxide	Total Catch	ug	107	238	217	187.33
TIC: 67-68-5	Concentration	ug/dscm	26.79	63.31	63.83	51.31
	Emission Rate	lbs/hr	6.77E-05	1.53E-04	1.43E-04	1.21E-04
	Emission Rate	g/s	8.53E-06	1.93E-05	1.80E-05	1.53E-05
Decane	Total Catch	ug	42.4	40	36.2	39.53
TIC: 124-18-5	Concentration	ug/dscm	10.61	10.64	10.65	10.63
	Emission Rate	lbs/hr	2.68E-05	2.57E-05	2.39E-05	2.55E-05
	Emission Rate	g/s	3.38E-06	3.24E-06	3.01E-06	3.21E-06
1-Docosene	Total Catch	ug	100	NO TIC	NO TIC	100
TIC: 1599-67-3	Concentration	ug/dscm	25.03			25.03
	Emission Rate	lbs/hr	6.33E-05			6.33E-05
	Emission Rate	g/s	7.98E-06			7.98E-06
13-Docosenamide, (z)-	Total Catch	ug	13.5	5.3	NO TIC	9.4
TIC: 112-84-5	Concentration	ug/dscm	3.38	1.41		2.39
	Emission Rate	lbs/hr	8.55E-06	3.41E-06		5.98E-06
	Emission Rate	g/s	1.08E-06	4.29E-07		7.53E-07

Table 8-4: Semivolatile Organic Emissions Summary (Continued)

Parameter		Units	C4bR1	C4bR4	C4bR5	Average
Cyclopropane, nonyl-	Total Catch	ug	12	8	7.7	9.23
TIC: 74663-85-7	Concentration	ug/dscm	3.00	2.13	2.26	2.47
	Emission Rate	lbs/hr	7.60E-06	5.14E-06	5.07E-06	5.94E-06
	Emission Rate	g/s	9.57E-07	6.48E-07	6.39E-07	7.48E-07
Tridecanal	Total Catch	ug	12	NO TIC	NO TIC	12
TIC: 10486-19-8	Concentration	ug/dscm	3.00			3.00
	Emission Rate	lbs/hr	7.60E-06			7.60E-06
	Emission Rate	g/s	9.57E-07			9.57E-07
Tetradecanal	Total Catch	ug	12	8.4	NO TIC	10.2
TIC: 124-25-4	Concentration	ug/dscm	3.00	2.23		2.62
	Emission Rate	lbs/hr	7.60E-06	5.40E-06		6.50E-06
	Emission Rate	g/s	9.57E-07	6.80E-07		8.19E-07
13-Oxabecyclo [10.1.0] tridecane	Total Catch	ug	13	NO TIC	NO TIC	13
TIC: 286-99-7	Concentration	ug/dscm	3.25			3.25
	Emission Rate	lbs/hr	8.23E-06			8.23E-06
	Emission Rate	g/s	1.04E-06			1.04E-06
Dibutyl phthalate	Total Catch	ug	56	NO TIC	NO TIC	56
TIC: 84-74-2	Concentration	ug/dscm	14.02			14.02
	Emission Rate	lbs/hr	3.54E-05			3.54E-05
	Emission Rate	g/s	4.47E-06			4.47E-06
N-hexadecanoic acid	Total Catch	ug	12	11	15.1	12.7
TIC: 57-10-3	Concentration	ug/dscm	3.00	2.93	4.44	3.46
	Emission Rate	lbs/hr	7.60E-06	7.07E-06	9.95E-06	8.21E-06
	Emission Rate	g/s	9.57E-07	8.91E-07	1.25E-06	1.03E-06
Eicosane	Total Catch	ug	13.4	6.5	NO TIC	9.95
TIC: 112-95-8	Concentration	ug/dscm	3.35	1.73		2.54
	Emission Rate	lbs/hr	8.48E-06	4.18E-06		6.33E-06
	Emission Rate	g/s	1.07E-06	5.26E-07		7.98E-07
5-Eicosene, (e)-	Total Catch	ug	7.4	NO TIC	NO TIC	7.4
TIC: 74685-30-6	Concentration	ug/dscm	1.85			1.85
	Emission Rate	lbs/hr	4.68E-06			4.68E-06
	Emission Rate	g/s	5.90E-07			5.90E-07
9-Octadecenamide, (z)-	Total Catch	ug	9.7	NO TIC	17.1	13.4
TIC: 301-02-0	Concentration	ug/dscm	2.43		5.03	3.73
	Emission Rate	lbs/hr	6.14E-06		1.13E-05	8.70E-06
	Emission Rate	g/s	7.74E-07		1.42E-06	1.10E-06

Table 8-4: Semivolatile Organic Emissions Summary (Continued)

Parameter		Units	C4bR1	C4bR4	C4bR5	Average
1-Hexacosanol	Total Catch	ug	29	NO TIC	NO TIC	29
TIC: 506-52-5	Concentration	ug/dscm	7.26			7.26
	Emission Rate	lbs/hr	1.84E-05			1.84E-05
	Emission Rate	g/s	2.31E-06			2.31E-06
Z-2-octadecen-1-ol	Total Catch	ug	NO TIC	8.3	NO TIC	8.3
TIC: 100013-11-1	Concentration	ug/dscm		2.21		2.21
	Emission Rate	lbs/hr		5.34E-06		5.34E-06
	Emission Rate	g/s		6.72E-07		6.72E-07
Octadecane	Total Catch	ug	NO TIC	7.4	NO TIC	7.4
TIC: 593-45-3	Concentration	ug/dscm		1.97		1.97
	Emission Rate	lbs/hr		4.76E-06		4.76E-06
	Emission Rate	g/s		5.99E-07		5.99E-07
Isopropyl myristate	Total Catch	ug	NO TIC	6.5	NO TIC	6.5
TIC: 110-27-0	Concentration	ug/dscm		1.73		1.73
	Emission Rate	lbs/hr		4.18E-06		4.18E-06
	Emission Rate	g/s		5.26E-07		5.26E-07
Phthalic acid, 6-ethyl-3-octyl	Total Catch	ug	NO TIC	28	NO TIC	28
TIC: 100031-51-7	Concentration	ug/dscm		7.45		7.45
	Emission Rate	lbs/hr		1.80E-05		1.80E-05
	Emission Rate	g/s		2.27E-06		2.27E-06
1-Octadecanol	Total Catch	ug	NO TIC	100	6.1	53.05
TIC: 112-92-5	Concentration	ug/dscm		26.60	1.79	14.20
	Emission Rate	lbs/hr		6.43E-05	4.02E-06	3.41E-05
	Emission Rate	g/s		8.10E-06	5.06E-07	4.30E-06
17-Pentatriacontene	Total Catch	ug	NO TIC	9.1	NO TIC	9.1
TIC: 6971-40-0	Concentration	ug/dscm		2.42		2.42
	Emission Rate	lbs/hr		5.85E-06		5.85E-06
	Emission Rate	g/s		7.37E-07		7.37E-07
Cyclotetracosane	Total Catch	ug	NO TIC	35	NO TIC	35
TIC: 297-03-0	Concentration	ug/dscm		9.31		9.31
	Emission Rate	lbs/hr		2.25E-05		2.25E-05
	Emission Rate	g/s		2.83E-06		2.83E-06
1-Triacontanol	Total Catch	ug	NO TIC	10	NO TIC	10
TIC: 593-50-0	Concentration	ug/dscm		2.66		2.66
	Emission Rate	lbs/hr		6.43E-06		6.43E-06
	Emission Rate	g/s		8.10E-07		8.10E-07

Table 8-4: Semivolatile Organic Emissions Summary (Continued)

Parameter		Units	C4bR1	C4bR4	C4bR5	Average
Octadecanoic acid, methyl este	Total Catch	ug	NO TIC	4	NO TIC	4
TIC: 112-61-8	Concentration	ug/dscm		1.06		1.06
	Emission Rate	lbs/hr		2.57E-06		2.57E-06
	Emission Rate	g/s		3.24E-07		3.24E-07
3-Eicosene, (e)-	Total Catch	ug	NO TIC	5.5	NO TIC	5.5
TIC: 74685-33-9	Concentration	ug/dscm		1.46		1.46
	Emission Rate	lbs/hr		3.54E-06		3.54E-06
	Emission Rate	g/s		4.45E-07		4.45E-07
Hexadecanal	Total Catch	ug	NO TIC	NO TIC	6.7	6.7
TIC: 629-80-1	Concentration	ug/dscm			1.97	1.97
	Emission Rate	lbs/hr			4.41E-06	4.41E-06
	Emission Rate	g/s			5.56E-07	5.56E-07
Heptadecane	Total Catch	ug	NO TIC	NO TIC	7.9	7.9
TIC: 629-78-1	Concentration	ug/dscm			2.32	2.32
	Emission Rate	lbs/hr			5.21E-06	5.21E-06
	Emission Rate	g/s			6.56E-07	6.56E-07
Benzene, 1,1'-[1,2-ethanediylb	Total Catch	ug	NO TIC	NO TIC	8	8
TIC: 104-66-5	Concentration	ug/dscm			2.35	2.35
	Emission Rate	lbs/hr			5.27E-06	5.27E-06
	Emission Rate	g/s			6.64E-07	6.64E-07
Cyclotetradecane	Total Catch	ug	NO TIC	NO TIC	31	31
TIC: 295-17-0	Concentration	ug/dscm			9.12	9.12
	Emission Rate	lbs/hr			2.04E-05	2.04E-05
	Emission Rate	g/s			2.57E-06	2.57E-06
Heneicosane	Total Catch	ug	NO TIC	NO TIC	5.3	5.3
TIC: 629-94-7	Concentration	ug/dscm			1.56	1.56
	Emission Rate	lbs/hr			3.49E-06	3.49E-06
	Emission Rate	g/s			4.40E-07	4.40E-07
1-Eicosanol	Total Catch	ug	NO TIC	NO TIC	95	95
TIC: 629-96-9	Concentration	ug/dscm			27.94	27.94
	Emission Rate	lbs/hr			6.26E-05	6.26E-05
	Emission Rate	g/s			7.89E-06	7.89E-06
1-Nonadecene	Total Catch	ug	NO TIC	NO TIC	6.9	6.9
TIC: 18435-45-5	Concentration	ug/dscm			2.03	2.03
	Emission Rate	lbs/hr			4.55E-06	4.55E-06
	Emission Rate	g/s			5.73E-07	5.73E-07

Table 8-4: Semivolatile Organic Emissions Summary (Continued)

Parameter		Units	C4bR1	C4bR4	C4bR5	Average
Pentafluoropropionic acid, oct	Total Catch	ug	NO TIC	NO TIC	8.8	8.8
TIC: 100028-00-7	Concentration	ug/dscm			2.59	2.59
	Emission Rate	lbs/hr			5.80E-06	5.80E-06
	Emission Rate	g/s			7.31E-07	7.31E-07
Phosphine imide, p,p,p-triphen	Total Catch	ug	NO TIC	NO TIC	6.8	6.8
TIC: 2240-47-3	Concentration	ug/dscm			2.00	2.00
	Emission Rate	lbs/hr			4.48E-06	4.48E-06
	Emission Rate	g/s			5.65E-07	5.65E-07
1-Hexadecanal	Total Catch	ug	NO TIC	6.7	NO TIC	6.7
TIC: 36653-82-4	Concentration	ug/dscm		1.78		1.78
	Emission Rate	lbs/hr		4.31E-06		4.31E-06
	Emission Rate	g/s		5.43E-07		5.43E-07
Cyclooctacosane	Total Catch	ug	NO TIC	NO TIC	33	33
TIC: 297-24-5	Concentration	ug/dscm			9.71	9.71
	Emission Rate	lbs/hr			2.17E-05	2.17E-05
	Emission Rate	g/s			2.74E-06	2.74E-06

Notes:

(A) Blank corrections have not been made to these data.

(B) Results have been reported considering both the RL and DL as reported on the laboratory results page for each fraction. To provide the most conservative emission estimates, calibrated target compounds that are not detected are reported at the RL. Values reported between the RL and MDL are incorporated into the emission estimate as reported. When identified, TICs are reported at the reported estimated concentrations.

(C) "NOT FOUND" indicates that a non-calibrated target compound was not found using an ion-specific forward library search. An estimated RL or DL is not available for these compounds.

(D) Note that only TICs detected in multiple runs are averaged. If detected in only a single run, that value is reported in the "Average" column. "NO TIC" is reported for the runs in which the TIC was not found. In instances where a TIC was identified more than once in one (1) or more sample fractions, the reported value represents the sum of all reported values.

Table 8-5: Dioxin/Furan Emissions Summary

Parameer	Units	C4bR1					
Sample Volume	dscf	141.772					
Gas Flow Rate	dscfm	669					
O_2 Level	%	13.3					
Congeners	**TEF** [EPA/100/R-10/005]		**Measured Catch (pg)**		**Weighted Catch (pg)**	**Emission Rate (g/s)**	**CAA Permit Limit**
2,3,7,8-TetraCDD	1.0	<	3.50	ND	3.5		---
Total 2,3,7,8-TetraCDD	---	<	3.50	ND	---	2.75E-13	---
Total TetraCDD	---	<	3.50	ND	---		---
1,2,3,7,8 PentaCDD	1.0	<	5.7	ND	5.7		---
Total 2,3,7,8-PentaCDD	---	<	5.7	ND	---	4.48E-13	---
Total PentaCDD	---	<	5.7	ND	---		---
1,2,3,4,7,8 HexaCDD	0.1	<	4.10	ND	0.41		---
1,2,3,6,7,8 HexaCDD	0.1	<	3.50	ND	0.35		---
1,2,3,7,8,9 HexaCDD	0.1	<	3.5	ND	0.35		---
Total 2,3,7,8-HexaCDD	---	<	11.10	ND	---	8.73E-13	---
Total HexaCDD	---	<	4.1	ND	---		---
1,2,3,4,6,7,8 HeptaCDD	0.01	<	16.1	ND	0.161		---
Total 2,3,7,8-HeptaCDD	---	<	16.1	ND	---	1.27E-12	---
Total HeptaCDD	---	<	16.1	ND	---		---
Total OctaCDD	0.0003	<	164.0		0.0492	1.29E-11	---
Sum	pg				10.5202		
Concentration	ng-TEQ/dscm @ 7% O_2				0.0048		
2,3,7,8 TetraCDF	0.1	<	14.1		1.41		---
Total 2,3,7,8-TetraCDF	---	<	14.1		---	1.11E-12	---
Total TetraCDF	---	<	14.1		---		---
1,2,3,7,8 PentaCDF	0.03	<	9.7	ND	0.291		---
2,3,4,7,8 PentaCDF	0.3	<	3.7	ND	1.11		---
Total 2,3,7,8-PentaCDF	---	<	13.4	ND	---	1.05E-12	---
Total PentaCDF	---	<	9.7	ND	---		---
1,2,3,4,7,8 HexaCDF	0.1	<	15.1	ND	1.51		---
1,2,3,6,7,8 HexaCDF	0.1	<	3.4	ND	0.34		---
2,3,4,6,7,8 HexaCDF	0.1	<	3.7	ND	0.37		---
1,2,3,7,8,9 HexaCDF	0.1	<	3.3	ND	0.33		---
Total 2,3,7,8-HexaCDF	---	<	25.5	ND	---	2.01E-12	---
Total HexaCDF	---	<	15.1	ND	---		---
1,2,3,4,6,7,8 HeptaCDF	0.01	<	15.3	ND	0.153		---
1,2,3,4,7,8,9 HeptaCDF	0.01	<	9.3	ND	0.093		---
Total 2,3,7,8-HeptaCDF	---	<	24.6	ND	---	1.93E-12	---
Total HeptaCDF	---	<	18.3	ND	---		---
Total OctaCDF	0.0003	<	38	ND	0.0114	2.99E-12	---
Sum	pg				5.6184		
Concentration	ng-TEQ/dscm @ 7% O_2				0.0026		
Total Dioxins/Furans	ng-TEQ/dscm @ 7% O_2				0.0074		0.20

Table 8-5: Dioxin/Furan Emissions Summary (Continued)

Parameer	Units	C4bR4					
Sample Volume	dscf	134.909					
Gas Flow Rate	dscfm	639					
O_2 Level	%	13.1					
Congeners	**TEF** [EPA/100/R-10/005]		**Measured Catch (pg)**		**Weighted Catch (pg)**	**Emission Rate (g/s)**	**CAA Permit Limit**
2,3,7,8-TetraCDD	1.0	<	2.7	ND	2.7		---
Total 2,3,7,8-TetraCDD	---	<	2.7	ND	---	2.13E-13	---
Total TetraCDD	---	<	3.2	ND	---		---
1,2,3,7,8 PentaCDD	1.0	<	2.9	ND	2.9		---
Total 2,3,7,8-PentaCDD	---	<	2.9	ND	---	2.29E-13	---
Total PentaCDD	---	<	2.9	ND	---		---
1,2,3,4,7,8 HexaCDD	0.1	<	3.8	ND	0.38		---
1,2,3,6,7,8 HexaCDD	0.1	<	3.2	ND	0.32		---
1,2,3,7,8,9 HexaCDD	0.1	<	3.2	ND	0.32		---
Total 2,3,7,8-HexaCDD	---	<	10.2	ND	---	8.05E-13	---
Total HexaCDD	---	<	3.8	ND	---		---
1,2,3,4,6,7,8 HeptaCDD	0.01	<	8.0	ND	0.080		---
Total 2,3,7,8-HeptaCDD	---	<	8.0	ND	---	6.32E-13	---
Total HeptaCDD	---	<	9.2	ND	---		---
Total OctaCDD	0.0003	<	32	ND	0.0096	2.53E-12	---
Sum	pg				6.7096		
Concentration	ng-TEQ/dscm @ 7% O_2				0.0031		
2,3,7,8 TetraCDF	0.1	<	16.7		1.67		---
Total 2,3,7,8-TetraCDF	---	<	16.7		---	1.32E-12	---
Total TetraCDF	---	<	16.7		---		---
1,2,3,7,8 PentaCDF	0.03	<	5.2	ND	0.156		---
2,3,4,7,8 PentaCDF	0.3	<	4.1	ND	1.23		---
Total 2,3,7,8-PentaCDF	---	<	9.3	ND	---	7.34E-13	---
Total PentaCDF	---	<	7.4	ND	---		---
1,2,3,4,7,8 HexaCDF	0.1	<	14.0	ND	1.4		---
1,2,3,6,7,8 HexaCDF	0.1	<	2.5	ND	0.25		---
2,3,4,6,7,8 HexaCDF	0.1	<	3.4	ND	0.34		---
1,2,3,7,8,9 HexaCDF	0.1	<	3.1	ND	0.31		---
Total 2,3,7,8-HexaCDF	---	<	23.0	ND	---	1.82E-12	---
Total HexaCDF	---	<	14.0	ND	---		---
1,2,3,4,6,7,8 HeptaCDF	0.01	<	11.8	ND	0.118		---
1,2,3,4,7,8,9 HeptaCDF	0.01	<	8.9	ND	0.089		---
Total 2,3,7,8-HeptaCDF	---	<	20.7	ND	---	1.63E-12	---
Total HeptaCDF	---	<	15.2	ND	---		---
Total OctaCDF	0.0003	<	33	ND	0.0099	2.61E-12	---
Sum	pg				5.5729		
Concentration	ng-TEQ/dscm @ 7% O_2				0.0026		
Total Dioxins/Furans	ng-TEQ/dscm @ 7% O_2				0.0057		0.20

Table 8-5: Dioxin/Furan Emissions Summary (Continued)

Parameer	Units	C4bR5					
Sample Volume	dscf	120.088					
Gas Flow Rate	dscfm	590					
O_2 Level	%	13.4					
Congeners	**TEF** [EPA/100/R-10/005]		**Measured Catch (pg)**		**Weighted Catch (pg)**	**Emission Rate (g/s)**	**CAA Permit Limit**
2,3,7,8-TetraCDD	1.0	<	3.1	ND	3.1		---
Total 2,3,7,8-TetraCDD	---	<	3.1	ND	---	2.54E-13	---
Total TetraCDD	---	<	3.1	ND	---		---
1,2,3,7,8 PentaCDD	1.0	<	3.1	ND	3.1		---
Total 2,3,7,8-PentaCDD	---	<	3.1	ND	---	2.54E-13	---
Total PentaCDD	---	<	3.1	ND	---		---
1,2,3,4,7,8 HexaCDD	0.1	<	3.12	ND	0.312		---
1,2,3,6,7,8 HexaCDD	0.1	<	2.69	ND	0.269		---
1,2,3,7,8,9 HexaCDD	0.1	<	2.68	ND	0.268		---
Total 2,3,7,8-HexaCDD	---	<	8.49	ND	---	6.95E-13	---
Total HexaCDD	---	<	3.12	ND	---		---
1,2,3,4,6,7,8 HeptaCDD	0.01	<	7.6	ND	0.076		---
Total 2,3,7,8-HeptaCDD	---	<	7.6	ND	---	6.22E-13	---
Total HeptaCDD	---	<	9.7	ND	---		---
Total OctaCDD	0.0003	<	28	ND	0.0084	2.29E-12	---
Sum	pg				7.1334		
Concentration	ng-TEQ/dscm @ 7% O_2				0.0039		
2,3,7,8 TetraCDF	0.1	<	17.7		1.77		---
Total 2,3,7,8-TetraCDF	---	<	17.7		---	1.45E-12	---
Total TetraCDF	---	<	17.7		---		---
1,2,3,7,8 PentaCDF	0.03	<	10.7	ND	0.321		---
2,3,4,7,8 PentaCDF	0.3	<	3.4	ND	1.02		---
Total 2,3,7,8-PentaCDF	---	<	14.1	ND	---	1.15E-12	---
Total PentaCDF	---	<	10.7	ND	---		---
1,2,3,4,7,8 HexaCDF	0.1	<	16.6	ND	1.66		---
1,2,3,6,7,8 HexaCDF	0.1	<	3.4	ND	0.34		---
2,3,4,6,7,8 HexaCDF	0.1	<	4.2	ND	0.42		---
1,2,3,7,8,9 HexaCDF	0.1	<	3.5	ND	0.35		---
Total 2,3,7,8-HexaCDF	---	<	27.7	ND	---	2.27E-12	---
Total HexaCDF	---	<	16.6	ND	---		---
1,2,3,4,6,7,8 HeptaCDF	0.01	<	10.4	ND	0.104		---
1,2,3,4,7,8,9 HeptaCDF	0.01	<	9.6	ND	0.096		---
Total 2,3,7,8-HeptaCDF	---	<	20	ND	---	1.64E-12	---
Total HeptaCDF	---	<	11.8	ND	---		---
Total OctaCDF	0.0003	<	20.6	ND	0.00618	1.69E-12	---
Sum	pg				6.08718		
Concentration	ng-TEQ/dscm @ 7% O_2				0.0033		
Total Dioxins/Furans	ng-TEQ/dscm @ 7% O_2				0.0072		0.20

Table 8-5: Dioxin/Furan Emissions Summary (Continued)

Parameer	Units	Average				
Sample Volume	dscf	132.26				
Gas Flow Rate	dscfm	632.67				
O_2 Level	%	13.27				
Congeners	**TEF** [EPA/100/R-10/005]	**Measured Catch (pg)**			**Weighted Catch (pg)**	**Emission Rate (g/s)**	**CAA Permit Limit**
2,3,7,8-TetraCDD	1.0	<	3.10	ND	3.10		---
Total 2,3,7,8-TetraCDD	---	<	3.10	ND	---	2.47E-13	---
Total TetraCDD	---	<	3.27	ND	---		---
1,2,3,7,8 PentaCDD	1.0	<	3.90	ND	3.90		---
Total 2,3,7,8-PentaCDD	---	<	3.90	ND	---	3.10E-13	---
Total PentaCDD	---	<	3.90	ND	---		---
1,2,3,4,7,8 HexaCDD	0.1	<	3.67	ND	0.37		---
1,2,3,6,7,8 HexaCDD	0.1	<	3.13	ND	0.31		---
1,2,3,7,8,9 HexaCDD	0.1	<	3.13	ND	0.31		---
Total 2,3,7,8-HexaCDD	---	<	9.93	ND	---	7.91E-13	---
Total HexaCDD	---	<	3.67	ND	---		---
1,2,3,4,6,7,8 HeptaCDD	0.01	<	10.57	ND	0.11		---
Total 2,3,7,8-HeptaCDD	---	<	10.57	ND	---	8.40E-13	---
Total HeptaCDD	---	<	11.67	ND	---		---
Total OctaCDD	0.0003	<	74.67		0.022	5.91E-12	---
Sum	pg				8.121		
Concentration	ng-TEQ/dscm @ 7% O_2				0.0039		
2,3,7,8 TetraCDF	0.1	<	16.17		1.62		---
Total 2,3,7,8-TetraCDF	---	<	16.17		---	1.29E-12	---
Total TetraCDF	---	<	16.17		---		---
1,2,3,7,8 PentaCDF	0.03	<	8.53	ND	0.26		---
2,3,4,7,8 PentaCDF	0.3	<	3.73	ND	1.12		---
Total 2,3,7,8-PentaCDF	---	<	12.27	ND	---	9.81E-13	---
Total PetnaCDF	---	<	9.27	ND	---		---
1,2,3,4,7,8 HexaCDF	0.1	<	15.23	ND	1.52		---
1,2,3,6,7,8 HexaCDF	0.1	<	3.10	ND	0.31		---
2,3,4,6,7,8 HexaCDF	0.1	<	3.77	ND	0.38		---
1,2,3,7,8,9 HexaCDF	0.1	<	3.30	ND	0.33		---
Total 2,3,7,8-HexaCDF	---	<	25.40	ND	---	2.03E-12	---
Total HexaCDF	---	<	15.23	ND	---		---
1,2,3,4,6,7,8 HeptaCDF	0.01	<	12.50	ND	0.13		---
1,2,3,4,7,8,9 HeptaCDF	0.01	<	9.27	ND	0.093		---
Total 2,3,7,8-HeptaCDF	---	<	21.77	ND	---	1.74E-12	---
Total HeptaCDF	---	<	15.10	ND	---		---
Total OctaCDF	0.0003	<	30.53	ND	0.0092	2.43E-12	---
Sum	pg				5.7595		
Concentration	ng-TEQ/dscm @ 7% O_2				0.0028		
Total Dioxins/Furans	ng-TEQ/dscm @ 7% O_2				0.0067		0.20

Notes:
(A) Blank corrections have not been made to these data.
(B) Results have been reported considering both the RL and DL as reported on the laboratory results page for each fraction. To provide the most conservative emission estimates, calibrated target compounds that are not detected are reported at the RL. Values reported between the RL and MDL are incorporated into the emission estimate as reported.

Table 8-6: Volatile Organic Emissions Summary

Parameter		Units	C4bR1	C4bR4	C4bR5	Average
Sample Volume		liters	78.41	78.64	78.45	78.50
Gas Flow Rate		dscfm	673.33	637.50	583.67	631.50
Acetone	Total Catch	ug	< 2.62	2.51	2.63	< 2.59
	Concentration	ug/dscm	< 33.37	31.95	33.50	< 32.94
	Emission Rate	lbs/hr	< 8.42E-05	7.63E-05	7.32E-05	< 7.79E-05
	Emission Rate	g/s	< 1.06E-05	9.61E-06	9.23E-06	< 9.82E-06
Benzene	Total Catch	ug	< 0.080	< 0.088	< 0.095	< 0.09
	Concentration	ug/dscm	< 1.02	< 1.12	< 1.21	< 1.12
	Emission Rate	lbs/hr	< 2.58E-06	< 2.69E-06	< 2.65E-06	< 2.64E-06
	Emission Rate	g/s	< 3.26E-07	< 3.38E-07	< 3.34E-07	< 3.33E-07
Bromodichloromethane	Total Catch	ug	< 0.22	< 0.28	< 0.21	< 0.24
	Concentration	ug/dscm	< 2.84	< 3.62	< 2.67	< 3.05
	Emission Rate	lbs/hr	< 7.16E-06	< 8.65E-06	< 5.84E-06	< 7.22E-06
	Emission Rate	g/s	< 9.02E-07	< 1.09E-06	< 7.36E-07	< 9.09E-07
Bromoform	Total Catch	ug	< 0.24 ND	< 0.24 ND	< 0.24 ND	< 0.24 ND
	Concentration	ug/dscm	< 3.08 ND	< 3.08 ND	< 3.08 ND	< 3.08 ND
	Emission Rate	lbs/hr	< 7.77E-06 ND	< 7.34E-06 ND	< 6.73E-06 ND	< 7.28E-06 ND
	Emission Rate	g/s	< 9.79E-07 ND	< 9.25E-07 ND	< 8.49E-07 ND	< 9.18E-07 ND
Bromomethane	Total Catch	ug	< 0.48 ND	< 0.48 ND	< 0.48 ND	< 0.48 ND
	Concentration	ug/dscm	< 6.16 ND	< 6.15 ND	< 6.16 ND	< 6.16 ND
	Emission Rate	lbs/hr	< 1.55E-05 ND	< 1.47E-05 ND	< 1.35E-05 ND	< 1.46E-05 ND
	Emission Rate	g/s	< 1.96E-06 ND	< 1.85E-06 ND	< 1.70E-06 ND	< 1.84E-06 ND
1,3-Butadiene	Total Catch	ug	< 0.31	< 0.15	< 0.22	< 0.23
	Concentration	ug/dscm	< 3.95	< 1.90	< 2.80	< 2.88
	Emission Rate	lbs/hr	< 9.96E-06	< 4.54E-06	< 6.12E-06	< 6.87E-06
	Emission Rate	g/s	< 1.26E-06	< 5.72E-07	< 7.71E-07	< 8.66E-07
2-Butanone (Methyl Ethyl Ketone)	Total Catch	ug	< 1.338	< 1.36	< 1.04	< 1.25
	Concentration	ug/dscm	< 17.07	< 17.28	< 13.23	< 15.86
	Emission Rate	lbs/hr	< 4.30E-05	< 4.13E-05	< 2.89E-05	< 3.78E-05
	Emission Rate	g/s	< 5.42E-06	< 5.20E-06	< 3.65E-06	< 4.76E-06
Carbon Disulfide	Total Catch	ug	< 0.17	< 0.27	< 0.32	< 0.26
	Concentration	ug/dscm	< 2.21	< 3.48	< 4.07	< 3.26
	Emission Rate	lbs/hr	< 5.59E-06	< 8.32E-06	< 8.91E-06	< 7.60E-06
	Emission Rate	g/s	< 7.04E-07	< 1.05E-06	< 1.12E-06	< 9.58E-07
Carbon Tetrachloride	Total Catch	ug	< 1.24	< 3.24	< 1.78	< 2.09
	Concentration	ug/dscm	< 15.85	< 41.24	< 22.69	< 26.60
	Emission Rate	lbs/hr	< 4.00E-05	< 9.85E-05	< 4.96E-05	< 6.27E-05
	Emission Rate	g/s	< 5.04E-06	< 1.24E-05	< 6.25E-06	< 7.90E-06

Table 8-6: Volatile Organic Emissions Summary (Continued)

Parameter		Units	C4bR1		C4bR4		C4bR5		Average	
Chlorobenzene	Total Catch	ug	< 0.096		< 0.10		< 0.088		< 0.096	
	Concentration	ug/dscm	< 1.22		< 1.32		< 1.13		< 1.22	
	Emission Rate	lbs/hr	< 3.09E-06		< 3.16E-06		< 2.46E-06		< 2.90E-06	
	Emission Rate	g/s	< 3.89E-07		< 3.98E-07		< 3.10E-07		< 3.66E-07	
Chlorodibromomethane	Total Catch	ug	< 0.24	ND	< 0.16		< 0.16		< 0.19	
	Concentration	ug/dscm	< 3.08	ND	< 2.06		< 2.05		< 2.40	
	Emission Rate	lbs/hr	< 7.77E-06	ND	< 4.92E-06		< 4.48E-06		< 5.73E-06	
	Emission Rate	g/s	< 9.79E-07	ND	< 6.20E-07		< 5.65E-07		< 7.21E-07	
Chloroethane	Total Catch	ug	< 0.21		< 0.17		< 0.24		< 0.21	
	Concentration	ug/dscm	< 2.73		< 2.11		< 3.05		< 2.63	
	Emission Rate	lbs/hr	< 6.88E-06		< 5.05E-06		< 6.67E-06		< 6.20E-06	
	Emission Rate	g/s	< 8.66E-07		< 6.36E-07		< 8.40E-07		< 7.81E-07	
Chloroform	Total Catch	ug	< 4.43		< 3.64		< 3.43		< 3.83	
	Concentration	ug/dscm	< 56.47		< 46.25		< 43.73		< 48.81	
	Emission Rate	lbs/hr	< 1.42E-04		< 1.10E-04		< 9.56E-05		< 1.16E-04	
	Emission Rate	g/s	< 1.79E-05		< 1.39E-05		< 1.20E-05		< 1.46E-05	
Chloromethane	Total Catch	ug	< 0.83		< 0.70		< 0.79		< 0.77	
	Concentration	ug/dscm	< 10.54		< 8.85		< 10.06		< 9.81	
	Emission Rate	lbs/hr	< 2.66E-05		< 2.11E-05		< 2.20E-05		< 2.32E-05	
	Emission Rate	g/s	< 3.35E-06		< 2.66E-06		< 2.77E-06		< 2.93E-06	
2-Chloropropane	Total Catch	ug	< 0.12	ND	< 0.12	ND	< 0.12	ND	< 0.12	ND
	Concentration	ug/dscm	< 1.55	ND	< 1.55	ND	< 1.55	ND	< 1.55	ND
	Emission Rate	lbs/hr	< 3.91E-06	ND	< 3.70E-06	ND	< 3.39E-06	ND	< 3.67E-06	ND
	Emission Rate	g/s	< 4.93E-07	ND	< 4.66E-07	ND	< 4.27E-07	ND	< 4.62E-07	ND
1,2-Dibromoethane (Ethylene Dibromide)	Total Catch	ug	< 0.24	ND	< 0.24	ND	< 0.24	ND	< 0.24	ND
	Concentration	ug/dscm	< 3.08	ND	< 3.08	ND	< 3.08	ND	< 3.08	ND
	Emission Rate	lbs/hr	< 7.77E-06	ND	< 7.34E-06	ND	< 6.73E-06	ND	< 7.28E-06	ND
	Emission Rate	g/s	< 9.79E-07	ND	< 9.25E-07	ND	< 8.49E-07	ND	< 9.18E-07	ND
Dibromomethane	Total Catch	ug	< 0.24	ND	< 0.24	ND	< 0.24	ND	< 0.24	ND
	Concentration	ug/dscm	< 3.08	ND	< 3.08	ND	< 3.08	ND	< 3.08	ND
	Emission Rate	lbs/hr	< 7.77E-06	ND	< 7.34E-06	ND	< 6.73E-06	ND	< 7.28E-06	ND
	Emission Rate	g/s	< 9.79E-07	ND	< 9.25E-07	ND	< 8.49E-07	ND	< 9.18E-07	ND
cis-1,4-Dichloro-2-butene	Total Catch	ug	< 0.48	ND	< 0.48	ND	< 0.48	ND	< 0.48	ND
	Concentration	ug/dscm	< 6.16	ND	< 6.15	ND	< 6.16	ND	< 6.16	ND
	Emission Rate	lbs/hr	< 1.55E-05	ND	< 1.47E-05	ND	< 1.35E-05	ND	< 1.46E-05	ND
	Emission Rate	g/s	< 1.96E-06	ND	< 1.85E-06	ND	< 1.70E-06	ND	< 1.84E-06	ND

Table 8-6: Volatile Organic Emissions Summary (Continued)

Parameter		Units	C4bR1		C4bR4		C4bR5		Average	
trans-1,4-Dichloro-2-butene	Total Catch	ug	< 0.48	ND	< 0.48	ND	< 0.48	ND	< 0.48	ND
	Concentration	ug/dscm	< 6.16	ND	< 6.15	ND	< 6.16	ND	< 6.16	ND
	Emission Rate	lbs/hr	< 1.55E-05	ND	< 1.47E-05	ND	< 1.35E-05	ND	< 1.46E-05	ND
	Emission Rate	g/s	< 1.96E-06	ND	< 1.85E-06	ND	< 1.70E-06	ND	< 1.84E-06	ND
Dichlorodifluoromethane	Total Catch	ug	< 0.23		< 0.22		< 0.21		< 0.22	
(Freon 12)	Concentration	ug/dscm	< 2.96		< 2.82		< 2.63		< 2.80	
	Emission Rate	lbs/hr	< 7.47E-06		< 6.72E-06		< 5.76E-06		< 6.65E-06	
	Emission Rate	g/s	< 9.41E-07		< 8.47E-07		< 7.25E-07		< 8.38E-07	
1,1-Dichloroethane	Total Catch	ug	< 0.20		< 0.16		< 0.22		< 0.190	
	Concentration	ug/dscm	< 2.50		< 1.97		< 2.80		< 2.43	
	Emission Rate	lbs/hr	< 6.31E-06		< 4.71E-06		< 6.13E-06		< 5.72E-06	
	Emission Rate	g/s	< 7.95E-07		< 5.94E-07		< 7.72E-07		< 7.20E-07	
1,2-Dichloroethane	Total Catch	ug	< 0.10		< 0.11		< 0.094		< 0.101	
	Concentration	ug/dscm	< 1.28		< 1.38		< 1.19		< 1.28	
	Emission Rate	lbs/hr	< 3.22E-06		< 3.30E-06		< 2.61E-06		< 3.04E-06	
	Emission Rate	g/s	< 4.05E-07		< 4.16E-07		< 3.28E-07		< 3.83E-07	
trans-1,2-Dichloroethene	Total Catch	ug	< 0.098		< 0.096		< 0.097		< 0.10	
	Concentration	ug/dscm	< 1.25		< 1.21		< 1.24		< 1.23	
	Emission Rate	lbs/hr	< 3.15E-06		< 2.90E-06		< 2.71E-06		< 2.92E-06	
	Emission Rate	g/s	< 3.97E-07		< 3.66E-07		< 3.41E-07		< 3.68E-07	
1,1-Dichloroethene	Total Catch	ug	< 0.37		< 0.25		< 0.35		< 0.324	
	Concentration	ug/dscm	< 4.74		< 3.13		< 4.51		< 4.12	
	Emission Rate	lbs/hr	< 1.20E-05		< 7.47E-06		< 9.86E-06		< 9.76E-06	
	Emission Rate	g/s	< 1.51E-06		< 9.41E-07		< 1.24E-06		< 1.23E-06	
1,2-Dichloropropane	Total Catch	ug	< 0.11		< 0.084		< 0.12		< 0.10	
(Propylene Dichloride)	Concentration	ug/dscm	< 1.35		< 1.07		< 1.57		< 1.33	
	Emission Rate	lbs/hr	< 3.41E-06		< 2.55E-06		< 3.43E-06		< 3.13E-06	
	Emission Rate	g/s	< 4.30E-07		< 3.21E-07		< 4.33E-07		< 3.95E-07	
cis-1,3-Dichloropropene	Total Catch	ug	< 0.12	ND	< 0.11		< 0.11		< 0.12	
	Concentration	ug/dscm	< 1.55	ND	< 1.41		< 1.46		< 1.47	
	Emission Rate	lbs/hr	< 3.91E-06	ND	< 3.37E-06		< 3.19E-06		< 3.49E-06	
	Emission Rate	g/s	< 4.93E-07	ND	< 4.25E-07		< 4.02E-07		< 4.40E-07	
trans-1,3-Dichloropropene	Total Catch	ug	< 0.12	ND	< 0.12	ND	< 0.12	ND	< 0.12	ND
	Concentration	ug/dscm	< 1.55	ND	< 1.55	ND	< 1.55	ND	< 1.55	ND
	Emission Rate	lbs/hr	< 3.91E-06	ND	< 3.70E-06	ND	< 3.39E-06	ND	< 3.67E-06	ND
	Emission Rate	g/s	< 4.93E-07	ND	< 4.66E-07	ND	< 4.27E-07	ND	< 4.62E-07	ND

Table 8-6: Volatile Organic Emissions Summary (Continued)

Parameter		Units	C4bR1		C4bR4		C4bR5		Average	
Ethyl Benzene	Total Catch	ug	< 0.095		< 0.12	ND	< 0.12	ND	< 0.11	
	Concentration	ug/dscm	< 1.21		< 1.55	ND	< 1.55	ND	< 1.44	
	Emission Rate	lbs/hr	< 3.06E-06		< 3.70E-06	ND	< 3.39E-06	ND	< 3.38E-06	
	Emission Rate	g/s	< 3.86E-07		< 4.66E-07	ND	< 4.27E-07	ND	< 4.26E-07	
Hexane	Total Catch	ug	< 0.22		< 0.24		< 0.23		< 0.23	
	Concentration	ug/dscm	< 2.78		< 3.05		< 2.87		< 2.90	
	Emission Rate	lbs/hr	< 7.02E-06		< 7.28E-06		< 6.28E-06		< 6.86E-06	
	Emission Rate	g/s	< 8.84E-07		< 9.17E-07		< 7.92E-07		< 8.64E-07	
2-Hexanone	Total Catch	ug	< 1.01	ND	< 1.01	ND	< 1.01	ND	< 1.01	ND
	Concentration	ug/dscm	< 12.86	ND	< 12.83	ND	< 12.85	ND	< 12.85	ND
	Emission Rate	lbs/hr	< 3.24E-05	ND	< 3.06E-05	ND	< 2.81E-05	ND	< 3.04E-05	ND
	Emission Rate	g/s	< 4.09E-06	ND	< 3.86E-06	ND	< 3.54E-06	ND	< 3.83E-06	ND
Iodomethane	Total Catch	ug	< 0.48	ND	< 0.48	ND	< 0.48	ND	< 0.48	ND
	Concentration	ug/dscm	< 6.16	ND	< 6.15	ND	< 6.16	ND	< 6.16	ND
	Emission Rate	lbs/hr	< 1.55E-05	ND	< 1.47E-05	ND	< 1.35E-05	ND	< 1.46E-05	ND
	Emission Rate	g/s	< 1.96E-06	ND	< 1.85E-06	ND	< 1.70E-06	ND	< 1.84E-06	ND
Methylene Chloride	Total Catch	ug	3.699		2.81		3.31		3.27	
	Concentration	ug/dscm	47.17		35.70		42.19		41.68	
	Emission Rate	lbs/hr	1.19E-04		8.53E-05		9.23E-05		9.88E-05	
	Emission Rate	g/s	1.50E-05		1.07E-05		1.16E-05		1.25E-05	
4-Methyl-2-pentanone	Total Catch	ug	< 1.01	ND	< 1.01	ND	< 1.01	ND	< 1.01	ND
(Methyl Isobutyl Ketone)	Concentration	ug/dscm	< 12.86	ND	< 12.83	ND	< 12.85	ND	< 12.85	ND
	Emission Rate	lbs/hr	< 3.24E-05	ND	< 3.06E-05	ND	< 2.81E-05	ND	< 3.04E-05	ND
	Emission Rate	g/s	< 4.09E-06	ND	< 3.86E-06	ND	< 3.54E-06	ND	< 3.83E-06	ND
2-Propanol	Total Catch	ug	< 22.08	ND	< 22.09	ND	< 22.08	ND	< 22.08	ND
	Concentration	ug/dscm	< 281.62	ND	< 280.93	ND	< 281.47	ND	< 281.34	ND
	Emission Rate	lbs/hr	< 7.10E-04	ND	< 6.71E-04	ND	< 6.15E-04	ND	< 6.66E-04	ND
	Emission Rate	g/s	< 8.95E-05	ND	< 8.45E-05	ND	< 7.75E-05	ND	< 8.39E-05	ND
Styrene	Total Catch	ug	< 0.12	ND	< 0.12	ND	< 0.12	ND	< 0.12	ND
	Concentration	ug/dscm	< 1.55	ND	< 1.55	ND	< 1.55	ND	< 1.55	ND
	Emission Rate	lbs/hr	< 3.91E-06	ND	< 3.70E-06	ND	< 3.39E-06	ND	< 3.67E-06	ND
	Emission Rate	g/s	< 4.93E-07	ND	< 4.66E-07	ND	< 4.27E-07	ND	< 4.62E-07	ND
1,1,1,2-Tetrachloroethane	Total Catch	ug	< 0.12	ND	< 0.12	ND	< 0.12	ND	< 0.12	ND
	Concentration	ug/dscm	< 1.55	ND	< 1.55	ND	< 1.55	ND	< 1.55	ND
	Emission Rate	lbs/hr	< 3.91E-06	ND	< 3.70E-06	ND	< 3.39E-06	ND	< 3.67E-06	ND
	Emission Rate	g/s	< 4.93E-07	ND	< 4.66E-07	ND	< 4.27E-07	ND	< 4.62E-07	ND

Table 8-6: Volatile Organic Emissions Summary (Continued)

Parameter		Units	C4bR1	C4bR4	C4bR5	Average
1,1,2,2-Tetrachloroethane	Total Catch	ug	< 0.24 ND	< 0.24 ND	< 0.24 ND	< 0.24 ND
	Concentration	ug/dscm	< 3.08 ND	< 3.08 ND	< 3.08 ND	< 3.08 ND
	Emission Rate	lbs/hr	< 7.77E-06 ND	< 7.34E-06 ND	< 6.73E-06 ND	< 7.28E-06 ND
	Emission Rate	g/s	< 9.79E-07 ND	< 9.25E-07 ND	< 8.49E-07 ND	< 9.18E-07 ND
Tetrachloroethene	Total Catch	ug	< 0.12 ND	< 0.12 ND	< 0.12 ND	< 0.12 ND
(Tetrachloroethylene)	Concentration	ug/dscm	< 1.55 ND	< 1.55 ND	< 1.55 ND	< 1.55 ND
	Emission Rate	lbs/hr	< 3.91E-06 ND	< 3.70E-06 ND	< 3.39E-06 ND	< 3.67E-06 ND
	Emission Rate	g/s	< 4.93E-07 ND	< 4.66E-07 ND	< 4.27E-07 ND	< 4.62E-07 ND
Toluene	Total Catch	ug	< 0.10	< 0.093	< 0.085	< 0.094
	Concentration	ug/dscm	< 1.33	< 1.19	< 1.09	< 1.20
	Emission Rate	lbs/hr	< 3.35E-06	< 2.84E-06	< 2.38E-06	< 2.85E-06
	Emission Rate	g/s	< 4.22E-07	< 3.57E-07	< 3.00E-07	< 3.60E-07
1,1,1-Trichloroethane	Total Catch	ug	< 0.11	< 0.087	< 0.094	< 0.10
	Concentration	ug/dscm	< 1.42	< 1.10	< 1.20	< 1.24
	Emission Rate	lbs/hr	< 3.58E-06	< 2.63E-06	< 2.62E-06	< 2.94E-06
	Emission Rate	g/s	< 4.50E-07	< 3.32E-07	< 3.30E-07	< 3.71E-07
1,1,2-Trichloroethane	Total Catch	ug	< 0.24 ND	< 0.24 ND	< 0.24 ND	< 0.24 ND
(Methyl Chloroform)	Concentration	ug/dscm	< 3.08 ND	< 3.08 ND	< 3.08 ND	< 3.08 ND
	Emission Rate	lbs/hr	< 7.77E-06 ND	< 7.34E-06 ND	< 6.73E-06 ND	< 7.28E-06 ND
	Emission Rate	g/s	< 9.79E-07 ND	< 9.25E-07 ND	< 8.49E-07 ND	< 9.18E-07 ND
Trichloroethene	Total Catch	ug	< 0.13	< 0.17	< 0.17	< 0.16
	Concentration	ug/dscm	< 1.64	< 2.19	< 2.12	< 1.98
	Emission Rate	lbs/hr	< 4.14E-06	< 5.22E-06	< 4.64E-06	< 4.67E-06
	Emission Rate	g/s	< 5.21E-07	< 6.58E-07	< 5.85E-07	< 5.88E-07
Trichlorofluoromethane	Total Catch	ug	< 0.35	< 0.17	< 0.15	< 0.22
(Freon 11)	Concentration	ug/dscm	< 4.43	< 2.12	< 1.92	< 2.82
	Emission Rate	lbs/hr	< 1.12E-05	< 5.07E-06	< 4.20E-06	< 6.81E-06
	Emission Rate	g/s	< 1.41E-06	< 6.39E-07	< 5.29E-07	< 8.59E-07
1,2,3-Trichloropropane	Total Catch	ug	< 0.24 ND	< 0.24 ND	< 0.24 ND	< 0.24 ND
	Concentration	ug/dscm	< 3.08 ND	< 3.08 ND	< 3.08 ND	< 3.08 ND
	Emission Rate	lbs/hr	< 7.77E-06 ND	< 7.34E-06 ND	< 6.73E-06 ND	< 7.28E-06 ND
	Emission Rate	g/s	< 9.79E-07 ND	< 9.25E-07 ND	< 8.49E-07 ND	< 9.18E-07 ND
1,1,2-Trichloro-1,2,2-trifluoroethane	Total Catch	ug	< 0.39	< 0.21	< 0.34	< 0.31
(Freon 113)	Concentration	ug/dscm	< 4.96	< 2.61	< 4.33	< 3.97
	Emission Rate	lbs/hr	< 1.25E-05	< 6.24E-06	< 9.48E-06	< 9.41E-06
	Emission Rate	g/s	< 1.58E-06	< 7.87E-07	< 1.19E-06	< 1.19E-06

Table 8-6: Volatile Organic Emissions Summary (Continued)

Parameter		Units	C4bR1		C4bR4		C4bR5		Average	
Vinyl Acetate	Total Catch	ug	< 0.48	ND	< 0.48	ND	< 0.48	ND	< 0.48	ND
	Concentration	ug/dscm	< 6.16	ND	< 6.15	ND	< 6.16	ND	< 6.16	ND
	Emission Rate	lbs/hr	< 1.55E-05	ND	< 1.47E-05	ND	< 1.35E-05	ND	< 1.46E-05	ND
	Emission Rate	g/s	< 1.96E-06	ND	< 1.85E-06	ND	< 1.70E-06	ND	< 1.84E-06	ND
Vinyl Bromide	Total Catch	ug	< 0.48	ND	< 0.48	ND	< 0.48	ND	< 0.48	ND
	Concentration	ug/dscm	< 6.16	ND	< 6.15	ND	< 6.16	ND	< 6.16	ND
	Emission Rate	lbs/hr	< 1.55E-05	ND	< 1.47E-05	ND	< 1.35E-05	ND	< 1.46E-05	ND
	Emission Rate	g/s	< 1.96E-06	ND	< 1.85E-06	ND	< 1.70E-06	ND	< 1.84E-06	ND
Vinyl Chloride	Total Catch	ug	< 0.95		< 0.68		< 1.12		< 0.91	
	Concentration	ug/dscm	< 12.12		< 8.60		< 14.22		< 11.64	
	Emission Rate	lbs/hr	< 3.06E-05		< 2.06E-05		< 3.11E-05		< 2.74E-05	
	Emission Rate	g/s	< 3.85E-06		< 2.59E-06		< 3.92E-06		< 3.45E-06	
m,p-Xylene	Total Catch	ug	< 0.21		< 0.21		< 0.23		< 0.21	
	Concentration	ug/dscm	< 2.65		< 2.64		< 2.87		< 2.72	
	Emission Rate	lbs/hr	< 6.69E-06		< 6.31E-06		< 6.28E-06		< 6.43E-06	
	Emission Rate	g/s	< 8.43E-07		< 7.95E-07		< 7.91E-07		< 8.10E-07	
o-Xylene	Total Catch	ug	< 0.12	ND	< 0.12	ND	< 0.12	ND	< 0.12	ND
	Concentration	ug/dscm	< 1.55	ND	< 1.55	ND	< 1.55	ND	< 1.55	ND
	Emission Rate	lbs/hr	< 3.91E-06	ND	< 3.70E-06	ND	< 3.39E-06	ND	< 3.67E-06	ND
	Emission Rate	g/s	< 4.93E-07	ND	< 4.66E-07	ND	< 4.27E-07	ND	< 4.62E-07	ND
Ethane, 2,2-dichloro-1,1,1tri	Total Catch	ug	3.07		0.36		0.133		1.19	
TIC: 306-83-2	Concentration	ug/dscm	39.15		4.54		1.70		15.13	
	Emission Rate	lbs/hr	9.88E-05		1.08E-05		3.71E-06		3.78E-05	
	Emission Rate	g/s	1.24E-05		1.37E-06		4.67E-07		4.76E-06	
Allyl chloride	Total Catch	ug	1.14		0.53		0.60		0.75	
TIC: 107-05-1	Concentration	ug/dscm	14.49		6.78		7.58		9.62	
	Emission Rate	lbs/hr	3.65E-05		1.62E-05		1.66E-05		2.31E-05	
	Emission Rate	g/s	4.60E-06		2.04E-06		2.09E-06		2.91E-06	
1-Propene, 2-methyl-	Total Catch	ug	0.65		0.40		0.38		0.47	
TIC: 115-11-7	Concentration	ug/dscm	8.29		5.02		4.83		6.05	
	Emission Rate	lbs/hr	2.09E-05		1.20E-05		1.06E-05		1.45E-05	
	Emission Rate	g/s	2.63E-06		1.51E-06		1.33E-06		1.83E-06	

Notes:

(A) No blank corrections have been made to these data. If undetected in the analysis, the DL is reported.

(B) Results have been reported considering both the reporting and MDLs as reported on the laboratory results page for each fraction. To provide the most conservative emission estimates, calibrated target compounds that are not detected are reported at the RL. Values reported between the reporting and MDLs are incorporated into the emission estimate as reported.

(C) Note that only TICs detected in multiple runs are averaged. If detected in only a single run, that value is reported in the "Average" column. "NO TIC" is reported for the runs in which the TIC was not found. In instances where a TIC was identified more than once in one (1) or more sample fractions, the reported value represents the sum of all reported values.

Table 8-7: TOC Emissions Summary

Parameter	Units	C4bR1	C4bR4	C4bR5	Average
Concentration	mg/m^3	< 11.59	< 10.64	< 13.62	< 11.95
Emission Rate	lbs/hr	< 2.83E-02	< 2.49E-02	< 2.96E-02	< 2.76E-02
Emission Rate	g/s	< 3.56E-03	< 3.14E-03	< 3.73E-03	< 3.48E-03

Note: Results have been reported considering both the RL and DL as reported on the laboratory results page for each fraction. To provide the most conservative emission estimates, calibrated target compounds that are not detected are reported at the RL. Values reported between the RL and MDL are incorporated into the emission estimate as reported.

Table 8-8: Semivolatile Unspeciated Organic Emissions Summary

Parameter	Units	C4bR1	C4bR4	C4bR5	Average
Sample Volume	dscf	138.325	129.331	117.741	128.47
Gas Flow Rate	dscf/hr	39,043	37,524	34,835	37,134
Total Chromatographable Organics (C_8 through C_{17})					
Total Catch	mg	1.4	1.6	1.2	1.4
Concentration	mg/m^3	0.36	0.44	0.36	0.38
Emission Rate	lbs/hr	8.71E-04	1.02E-03	7.83E-04	8.92E-04
Emission Rate	g/s	1.10E-04	1.29E-04	9.86E-05	1.12E-04
Total Gravimetric Organics					
Total Catch	mg	< 1.5 [ND]	< 1.5 [ND]	< 1.5 [ND]	< 1.5 [ND]
Concentration	mg/m^3	0.38	0.41	0.45	0.41
Emission Rate	lbs/hr	9.33E-04	9.59E-04	9.78E-04	9.57E-04
Emission Rate	g/s	1.18E-04	1.21E-04	1.23E-04	1.21E-04

Table 8-9: Volatile Unspeciated Organic Emissions Summary

Parameter	Units	C4bR1				Average	
		Bag 1	Condensate 1	Bag 2	Condensate 2	Bags	Condensates
Gas Volume	dsL	29.12		28.31		28.72	
Flow Rate	dscf/hr	39,043		39,043		39,043	
C_1 Concentration	ppm	1.00	---	0.927	---	0.964	---
C_1 Concentration	ug/m^3	667.20	---	618.49	---	642.84	---
C_1 Emission Rate	lbs/hr	1.63E-03	---	1.51E-03	---	1.57E-03	---
C_2 Concentration	ppm	0.0777	---	0.0422	---	0.060	---
C_2 Concentration	ug/m^3	97.17	---	52.77	---	74.97	---
C_2 Emission Rate	lbs/hr	2.37E-04	---	1.29E-04	---	1.83E-04	---
C_3 Concentration	ppm	0.0529	---	0.0283	---	0.0406	---
C_3 Concentration	ug/m^3	97.01	---	51.90	---	74.46	---
C_3 Emission Rate	lbs/hr	2.36E-04	---	1.27E-04	---	1.82E-04	---
C_4 Total Catch	ug	---	< 0.084 ND	---	< 0.083 ND	---	< 0.084 ND
C_4 Concentration	ppm	0.0586	---	0.0334	---	0.046	---
C_4 Concentration	ug/m^3	141.65	< 2.88 ND	80.74	< 2.93 ND	111.19	< 2.91 ND
C_4 Emission Rate	lbs/hr	3.45E-04	< 7.03E-06 ND	1.97E-04	< 7.15E-06 ND	2.71E-04	< 7.09E-06 ND
C_5 Total Catch	ug	---	< 0.042 ND	---	< 0.042 ND	---	< 0.042 ND
C_5 Concentration	ppm	< 0.014 ND	---	< 0.014 ND	---	< 0.014 ND	---
C_5 Concentration	ug/m^3	< 42.01 ND	< 1.44 ND	< 42.01 ND	< 1.48 ND	< 42.01 ND	< 1.46 ND
C_5 Emission Rate	lbs/hr	< 1.02E-04 ND	< 3.52E-06 ND	< 1.02E-04 ND	< 3.62E-06 ND	< 1.02E-04 ND	< 3.57E-06 ND
C_6 Total Catch	ug	---	< 0.042 ND	---	< 0.042 ND	---	< 0.042 ND
C_6 Concentration	ppm	2.19	---	3.22	---	2.705	---
C_6 Concentration	ug/m^3	7,848.95	< 1.44 ND	11,540.46	< 1.48 ND	9,694.71	< 1.46 ND
C_6 Emission Rate	lbs/hr	1.91E-02	< 3.52E-06 ND	2.81E-02	< 3.62E-06 ND	2.36E-02	< 3.57E-06 ND
C_7 Total Catch	ug	---	< 0.042 ND	---	< 0.042 ND	---	< 0.042 ND
C_7 Concentration	ppm	< 0.049 ND	---	< 0.049 ND	---	< 0.049 ND	---
C_7 Concentration	ug/m^3	< 204.20 ND	< 1.44 ND	< 204.20 ND	< 1.48 ND	< 204.20 ND	< 1.46 ND
C_7 Emission Rate	lbs/hr	< 4.98E-04 ND	< 3.52E-06 ND	< 4.98E-04 ND	< 3.62E-06 ND	< 4.98E-04 ND	< 3.57E-06 ND
Total C_1 through C_7 Compounds							
Concentration	ug/m^3	< 9,098.19	< 7.21 ND	< 12,590.58	< 7.38 ND	< 10,844.38	< 7.30 ND
Concentration	ug/m^3	< 9,105.40	---	< 12,597.96	---	< 10,851.68	---
Emission Rate	lbs/hr	< 2.22E-02	---	< 3.07E-02	---	< 2.65E-02	---
Emission Rate	g/s	< 2.80E-03	---	< 3.87E-03	---	< 3.33E-03	---

Table 8-9: Volatile Unspeciated Organics Emission Summary (Continued)

Parameter	Units	C4bR4				Average	
		Bag 1	Condensate 1	Bag 2	Condensate 2	Bags	Condensates
Gas Volume	dsL	28.75		29.05		28.90	
Flow Rate	dscf/hr	37,524		37,524		37,524	
C_1 Concentration	ppm	0.948	---	1.02	---	0.984	---
C_1 Concentration	ug/m^3	632.50	---	680.54	---	656.52	---
C_1 Emission Rate	lbs/hr	1.48E-03	---	1.59E-03	---	1.54E-03	---
C_2 Concentration	ppm	0.0555	---	0.0404	---	0.048	---
C_2 Concentration	ug/m^3	69.41	---	50.52	---	59.96	---
C_2 Emission Rate	lbs/hr	1.63E-04	---	1.18E-04	---	1.40E-04	---
C_3 Concentration	ppm	0.0303	---	0.0238	---	0.0271	---
C_3 Concentration	ug/m^3	55.57	---	43.65	---	49.61	---
C_3 Emission Rate	lbs/hr	1.30E-04	---	1.02E-04	---	1.16E-04	---
C_4 Total Catch	ug	---	< 0.084 ND	---	< 0.084 ND	---	< 0.084 ND
C_4 Concentration	ppm	0.0137	---	0.0114	---	0.0126	---
C_4 Concentration	ug/m^3	33.12	< 2.92 ND	27.56	< 2.89 ND	30.34	< 2.91 ND
C_4 Emission Rate	lbs/hr	7.76E-05	< 6.85E-06 ND	6.46E-05	< 6.78E-06 ND	7.11E-05	< 6.81E-06 ND
C_5 Total Catch	ug	---	< 0.042 ND	---	0.15	---	< 0.096
C_5 Concentration	ppm	< 0.014 ND	---	< 0.014 ND	---	< 0.014 ND	---
C_5 Concentration	ug/m^3	< 42.01 ND	< 1.46 ND	< 42.01 ND	5.16	< 42.01 ND	< 3.31
C_5 Emission Rate	lbs/hr	< 9.84E-05 ND	< 3.42E-06 ND	< 9.84E-05 ND	1.21E-05	< 9.84E-05 ND	< 7.76E-06
C_6 Total Catch	ug	---	< 0.042 ND	---	< 0.042 ND	---	< 0.042 ND
C_6 Concentration	ppm	3.07	---	1.81	---	2.44	---
C_6 Concentration	ug/m^3	11,002.86	< 1.46 ND	6,487.03	< 1.45 ND	8,744.95	< 1.45 ND
C_6 Emission Rate	lbs/hr	2.58E-02	< 3.42E-06 ND	1.52E-02	< 3.39E-06 ND	2.05E-02	< 3.41E-06 ND
C_7 Total Catch	ug	---	< 0.042 ND	---	< 0.042 ND	---	< 0.042 ND
C_7 Concentration	ppm	< 0.049 ND	---	< 0.049 ND	---	< 0.049 ND	---
C_7 Concentration	ug/m^3	< 204.20 ND	< 1.46 ND	< 204.20 ND	< 1.45 ND	< 204.20 ND	< 1.45 ND
C_7 Emission Rate	lbs/hr	< 4.78E-04 ND	< 3.42E-06 ND	< 4.78E-04 ND	< 3.39E-06 ND	< 4.78E-04 ND	< 3.41E-06 ND
Total C_1 through C_7 Compounds							
Concentration	ug/m^3	< 12,039.67	< 7.31 ND	< 7,535.51	< 10.95	< 9,787.59	< 9.13
Concentration	ug/m^3	< 12,046.97	---	< 7,546.46	---	< 9,796.71	---
Emission Rate	lbs/hr	< 2.82E-02	---	< 1.77E-02	---	< 2.30E-02	---
Emission Rate	g/s	< 3.56E-03	---	< 2.23E-03	---	< 2.89E-03	---

Table 8-9: Volatile Unspeciated Organics Emission Summary (Continued)

Parameter	Units	C4bR5				Average	
		Bag 1	Condensate 1	Bag 2	Condensate 2	Bags	Condensates
Gas Volume	dsL	28.67		28.87		28.77	
Flow Rate	dscf/hr	34,835		34,835		34,835	
C_1 Concentration	ppm	1.04	---	1.11	---	1.075	---
C_1 Concentration	ug/m^3	693.89	---	740.59	---	717.24	---
C_1 Emission Rate	lbs/hr	1.51E-03	---	1.61E-03	---	1.56E-03	---
C_2 Concentration	ppm	0.0585	---	0.0795	---	0.069	---
C_2 Concentration	ug/m^3	73.16	---	99.42	---	86.29	---
C_2 Emission Rate	lbs/hr	1.59E-04	---	2.16E-04	---	1.88E-04	---
C_3 Concentration	ppm	0.0482	---	0.0501	---	0.0492	---
C_3 Concentration	ug/m^3	88.39	---	91.88	---	90.14	---
C_3 Emission Rate	lbs/hr	1.92E-04	---	2.00E-04	---	1.96E-04	---
C_4 Total Catch	ug	---	< 0.084 ND	---	< 0.083 ND	---	< 0.0835 ND
C_4 Concentration	ppm	0.0261	---	0.0124	---	0.0193	---
C_4 Concentration	ug/m^3	63.09	< 2.93 ND	29.97	< 2.87 ND	46.53	< 2.90 ND
C_4 Emission Rate	lbs/hr	1.37E-04	< 6.37E-06 ND	6.52E-05	< 6.25E-06 ND	1.01E-04	< 6.31E-06 ND
C_5 Total Catch	ug	---	0.036	---	0.065	---	0.0505
C_5 Concentration	ppm	< 0.014 ND	---	< 0.014 ND	---	< 0.014 ND	---
C_5 Concentration	ug/m^3	< 42.01 ND	1.26	< 42.01 ND	2.25	< 42.01 ND	1.75
C_5 Emission Rate	lbs/hr	< 9.14E-05 ND	2.73E-06	< 9.14E-05 ND	4.90E-06	< 9.14E-05 ND	3.81E-06
C_6 Total Catch	ug	---	< 0.042 ND	---	< 0.042 ND	---	< 0.042 ND
C_6 Concentration	ppm	3.23	---	3.25	---	3.24	---
C_6 Concentration	ug/m^3	11,576.30	< 1.46 ND	11,647.98	< 1.45 ND	11,612.14	< 1.46 ND
C_6 Emission Rate	lbs/hr	2.52E-02	< 3.19E-06 ND	2.53E-02	< 3.16E-06 ND	2.53E-02	< 3.17E-06 ND
C_7 Total Catch	ug	---	< 0.042 ND	---	< 0.042 ND	---	< 0.042 ND
C_7 Concentration	ppm	< 0.049 ND	---	< 0.049 ND	---	< 0.049 ND	---
C_7 Concentration	ug/m^3	< 204.20 ND	< 1.46 ND	< 204.20 ND	< 1.45 ND	< 204.20 ND	< 1.46 ND
C_7 Emission Rate	lbs/hr	< 4.44E-04 ND	< 3.19E-06 ND	< 4.44E-04 ND	< 3.16E-06 ND	< 4.44E-04 ND	< 3.17E-06 ND
Total C_1 through C_7 Compounds							
Concentration	ug/m^3	< 12,741.04	< 7.11	< 12,856.05	< 8.04	< 12,798.55	< 7.58
Concentration	ug/m^3	< 12,748.16	---	< 12,864.09	---	< 12,806.12	---
Emission Rate	lbs/hr	< 2.77E-02	---	< 2.80E-02	---	< 2.79E-02	---
Emission Rate	g/s	< 3.49E-03	---	< 3.53E-03	---	< 3.51E-03	---

Table 8-10: Acid Gas and Particulate Emissions Summary

Parameter	Units	C4bR1	C4bR4	C4bR5	Average	RCRA/CAA Permit Limit
Sample Volume	dscf	134.179	119.365	101.279	118.27	
Gas Flow Rate	dscfm	683	648	566	632.33	
O_2 Level	%	13.3	13.1	13.4	13.27	
Hydrogen Chloride						
Catch	mg	< 1.1 ND	< 1.1 ND	< 0.91 ND	< 1.04 ND	---
Concentration	mg/dscm	< 0.29 ND	< 0.33 ND	< 0.32 ND	< 0.31 ND	---
Concentration	ppmv @ 7% O_2	< 0.35 ND	< 0.38 ND	< 0.39 ND	< 0.37 ND	---
Emission Rate	lbs/hr	< 7.41E-04 ND	< 7.90E-04 ND	< 6.73E-04 ND	< 7.34E-04 ND	---
Emission Rate	g/s	< 9.33E-05 ND	< 9.95E-05 ND	< 8.48E-05 ND	< 9.25E-05 ND	---
Chlorine						
Catch	mg	< 0.21 ND	< 0.23 ND	< 0.20 ND	< 0.21 ND	---
Concentration	mg/dscm	< 0.055 ND	< 0.068 ND	< 0.070 ND	< 0.064 ND	---
Concentration	ppmv @ 7% O_2	< 0.068 ND	< 0.082 ND	< 0.087 ND	< 0.079 ND	---
Emission Rate	lbs/hr	< 1.41E-04 ND	< 1.65E-04 ND	< 1.48E-04 ND	< 1.51E-04 ND	---
Emission Rate	g/s	< 1.78E-05 ND	< 2.08E-05 ND	< 1.86E-05 ND	< 1.91E-05 ND	---
Chloride Equivalents						
Concentration	ppmv @ 7% O_2	< 0.42 ND	< 0.46 ND	< 0.47 ND	< 0.45 ND	21
Hydrogen Fluoride						
Catch	mg	< 1.1 ND	< 1.2 ND	< 0.93 ND	< 1.08 ND	---
Concentration	mg/dscm	< 0.29 ND	< 0.35 ND	< 0.32 ND	< 0.32 ND	---
Emission Rate	lbs/hr	< 7.41E-04 ND	< 8.62E-04 ND	< 6.87E-04 ND	< 7.63E-04 ND	---
Emission Rate	g/s	< 9.33E-05 ND	< 1.09E-04 ND	< 8.66E-05 ND	< 9.62E-05 ND	---
Particulates[(1)]						
Catch, Total	mg	2.4	3.2	3.5	3.03	---
Concentration	mg/dscm	0.63	0.95	0.98	0.85	---
Concentration	mg/dscm @ 7% O_2	1.16	1.69	1.71	1.52	---
Concentration	gr/dscf @ 7% O_2	0.00050	0.00074	0.00074	0.00066	0.013
Emission Rate	lbs/hr	1.62E-03	2.30E-03	2.30E-03	2.07E-03	---
Emission Rate	g/s	2.04E-04	2.90E-04	2.89E-04	2.61E-04	---

Notes:
(A) Blank corrections have not been made to these data.
(B) Results have been reported considering both the RL and DL as reported on the laboratory results page for each fraction. To provide the most conservative emission estimates, calibrated target compounds that are not detected are reported at the RL. Values reported between the RL and MDL are incorporated into the emission estimate as reported.

Footnote:
(1) Due to a sampling method deviation incurred during C4bR5, the particulate results from C4bR2 were used for compliance purposes. C4bR5 particulate results are included in Appendix H.

Table 8-11: Trace Metal Emissions Summary

Parameter		Units	C4bR1	C4bR4	C4bR5	Average	CAA Permit Limit
Sample Volume		dscf	144.070	128.103	115.777	129.32	
Gas Flow Rate		dscfm	682	621	573	625.33	
O_2 Level		%	13.3	13.1	13.4	13.27	
Antimony	Total Catch	ug	< 0.346	0.27	< 0.346	< 0.32	---
	Concentration	ug/dscm	< 0.085	0.074	< 0.11	< 0.088	---
	Emission Rate	lbs/hr	< 2.17E-07	1.73E-07	< 2.27E-07	< 2.05E-07	---
	Emission Rate	g/s	< 2.73E-08	2.18E-08	< 2.85E-08	< 2.59E-08	---
Arsenic	Total Catch	ug	< 0.52	< 0.394	< 0.62 ND	< 0.51	---
	Concentration	ug/dscm	< 0.13	< 0.11	< 0.19 ND	< 0.14	---
	Emission Rate	lbs/hr	< 3.26E-07	< 2.53E-07	< 4.06E-07 ND	< 3.28E-07	---
	Emission Rate	g/s	< 4.10E-08	< 3.18E-08	< 5.11E-08 ND	< 4.13E-08	---
Barium	Total Catch	ug	4.4	3.2	4.08	3.89	---
	Concentration	ug/dscm	1.08	0.88	1.24	1.07	---
	Emission Rate	lbs/hr	2.76E-06	2.05E-06	2.67E-06	2.49E-06	---
	Emission Rate	g/s	3.47E-07	2.59E-07	3.37E-07	3.14E-07	---
Beryllium	Total Catch	ug	< 0.31 ND	< 0.187	< 0.31 ND	< 0.27	---
	Concentration	ug/dscm	< 0.076 ND	< 0.052	< 0.095 ND	< 0.074	---
	Emission Rate	lbs/hr	< 1.94E-07 ND	< 1.20E-07	< 2.03E-07 ND	< 1.72E-07	---
	Emission Rate	g/s	< 2.45E-08 ND	< 1.51E-08	< 2.56E-08 ND	< 2.17E-08	---
Boron	Total Catch	ug	73.6	34.6	22.0	43.40	---
	Concentration	ug/dscm	18.04	9.54	6.71	11.43	---
	Emission Rate	lbs/hr	4.61E-05	2.22E-05	1.44E-05	2.76E-05	---
	Emission Rate	g/s	5.81E-06	2.80E-06	1.81E-06	3.47E-06	---
Cadmium	Total Catch	ug	0.080	0.138	0.055	0.091	---
	Concentration	ug/dscm	0.020	0.038	0.017	0.025	---
	Emission Rate	lbs/hr	5.01E-08	8.85E-08	3.60E-08	5.82E-08	---
	Emission Rate	g/s	6.31E-09	1.11E-08	4.54E-09	7.33E-09	---
Chromium	Total Catch	ug	3.00	5.65	2.77	3.81	---
	Concentration	ug/dscm	0.74	1.56	0.84	1.05	---
	Emission Rate	lbs/hr	1.88E-06	3.62E-06	1.81E-06	2.44E-06	---
	Emission Rate	g/s	2.37E-07	4.56E-07	2.28E-07	3.07E-07	---
Cobalt	Total Catch	ug	0.35	0.57	0.107	0.34	---
	Concentration	ug/dscm	0.086	0.16	0.033	0.092	---
	Emission Rate	lbs/hr	2.19E-07	3.66E-07	7.00E-08	2.18E-07	---
	Emission Rate	g/s	2.76E-08	4.61E-08	8.83E-09	2.75E-08	---
Copper	Total Catch	ug	2.4	3.0	2.19	2.53	---
	Concentration	ug/dscm	0.59	0.83	0.67	0.69	---
	Emission Rate	lbs/hr	1.50E-06	1.92E-06	1.43E-06	1.62E-06	---
	Emission Rate	g/s	1.89E-07	2.42E-07	1.81E-07	2.04E-07	---

Table 8-11: Trace Metal Emissions Summary (Continued)

Parameter		Units	C4bR1	C4bR4	C4bR5	Average	CAA Permit Limit
Lead	Total Catch	ug	0.86	0.80	0.58	0.75	---
	Concentration	ug/dscm	0.21	0.22	0.18	0.20	---
	Emission Rate	lbs/hr	5.39E-07	5.13E-07	3.80E-07	4.77E-07	---
	Emission Rate	g/s	6.79E-08	6.46E-08	4.78E-08	6.01E-08	---
Manganese	Total Catch	ug	7.23	17.0	10.85	11.69	---
	Concentration	ug/dscm	1.77	4.69	3.31	3.26	---
	Emission Rate	lbs/hr	4.53E-06	1.09E-05	7.10E-06	7.51E-06	---
	Emission Rate	g/s	5.70E-07	1.37E-06	8.95E-07	9.46E-07	---
Mercury	Total Catch	ug	2.531	< 4.351	< 3.522	< 3.47	---
	Concentration	ug/dscm	0.62	< 1.20	< 1.07	< 0.96	---
	Emission Rate	lbs/hr	1.58E-06	< 2.79E-06	< 2.31E-06	< 2.23E-06	---
	Emission Rate	g/s	2.00E-07	< 3.52E-07	< 2.91E-07	< 2.81E-07	---
Nickel	Total Catch	ug	2.35	2.85	1.96	2.39	---
	Concentration	ug/dscm	0.58	0.79	0.60	0.65	---
	Emission Rate	lbs/hr	1.47E-06	1.83E-06	1.28E-06	1.53E-06	---
	Emission Rate	g/s	1.85E-07	2.30E-07	1.62E-07	1.92E-07	---
Phosphorus	Total Catch	ug	< 25.6	< 27.7	< 27.9	< 27.07	---
	Concentration	ug/dscm	< 6.27	< 7.64	< 8.51	< 7.47	---
	Emission Rate	lbs/hr	< 1.60E-05	< 1.78E-05	< 1.83E-05	< 1.74E-05	---
	Emission Rate	g/s	< 2.02E-06	< 2.24E-06	< 2.30E-06	< 2.19E-06	---
Selenium	Total Catch	ug	< 1.72 ND	< 1.07 ND	< 1.22 ND	< 1.34 ND	---
	Concentration	ug/dscm	< 0.42 ND	< 0.29 ND	< 0.37 ND	< 0.36 ND	---
	Emission Rate	lbs/hr	< 1.08E-06 ND	< 6.86E-07 ND	< 7.99E-07 ND	< 8.54E-07 ND	---
	Emission Rate	g/s	< 1.36E-07 ND	< 8.65E-08 ND	< 1.01E-07 ND	< 1.08E-07 ND	---
Silver	Total Catch	ug	0.527	6.336	3.412	3.43	---
	Concentration	ug/dscm	0.13	1.75	1.04	0.97	---
	Emission Rate	lbs/hr	3.30E-07	4.06E-06	2.23E-06	2.21E-06	---
	Emission Rate	g/s	4.16E-08	5.12E-07	2.81E-07	2.78E-07	---
Thallium	Total Catch	ug	< 0.31 ND	< 0.31 ND	< 0.31 ND	< 0.31 ND	---
	Concentration	ug/dscm	< 0.076 ND	< 0.085 ND	< 0.095 ND	< 0.085 ND	---
	Emission Rate	lbs/hr	< 1.94E-07 ND	< 1.99E-07 ND	< 2.03E-07 ND	< 1.99E-07 ND	---
	Emission Rate	g/s	< 2.45E-08 ND	< 2.50E-08 ND	< 2.56E-08 ND	< 2.50E-08 ND	---
Tin	Total Catch	ug	< 6.4	2.81	< 3.5	< 4.24	---
	Concentration	ug/dscm	< 1.57	0.77	< 1.07	< 1.14	---
	Emission Rate	lbs/hr	< 4.01E-06	1.80E-06	< 2.29E-06	< 2.70E-06	---
	Emission Rate	g/s	< 5.05E-07	2.27E-07	< 2.89E-07	< 3.40E-07	---

Table 8-11: Trace Metal Emissions Summary (Continued)

Parameter		Units	C4bR1		C4bR4		C4bR5		Average		CAA Permit Limit
Vanadium	Total Catch	ug	< 1.54	ND	< 1.54	ND	< 1.55	ND	< 1.54	ND	<
	Concentration	ug/dscm	< 0.38	ND	< 0.42	ND	< 0.47	ND	< 0.42	ND	
	Emission Rate	lbs/hr	< 9.64E-07	ND	< 9.87E-07	ND	< 1.01E-06	ND	< 9.89E-07	ND	
	Emission Rate	g/s	< 1.22E-07	ND	< 1.24E-07	ND	< 1.28E-07	ND	< 1.25E-07	ND	
Zinc	Total Catch	ug	29.6		30.2		22.7		27.50		
	Concentration	ug/dscm	7.25		8.32		6.92		7.50		
	Emission Rate	lbs/hr	1.85E-05		1.94E-05		1.49E-05		1.76E-05		
	Emission Rate	g/s	2.34E-06		2.44E-06		1.87E-06		2.22E-06		
Arsenic	Concentration	ug/dscm @ 7% O_2	< 0.23		< 0.19		< 0.35	ND	< 0.26		---
Beryllium	Concentration	ug/dscm @ 7% O_2	< 0.14	ND	< 0.092		< 0.18	ND	< 0.14		---
Chromium	Concentration	ug/dscm @ 7% O_2	1.34		2.78		1.57		1.90		---
Combined Total	Concentration	ug/dscm @ 7% O_2	< 1.72		< 3.061		< 2.09		< 2.29		23
Cadmium	Concentration	ug/dscm @ 7% O_2	0.036		0.068		0.031		0.045		---
Lead	Concentration	ug/dscm @ 7% O_2	0.39		0.39		0.33		0.37		---
Combined Total	Concentration	ug/dscm @ 7% O_2	0.42		0.46		0.36		0.41		10
Mercury	Concentration	ug/dscm @ 7% O_2	1.13		< 2.14		1.99		< 1.75		8.1

Notes:
(A) Blank corrections have not been made to these data.
(B) Results have been reported considering both the RL and DL as reported on the laboratory results page for each fraction. To provide the most conservative emission estimates, calibrated target compounds that are not detected are reported at the RL. Values reported between the RL and MDL are incorporated into the emission estimate as reported.

Table 8-12: Energetic Emissions Summary

Parameter	Units	C4bR1		C4bR4		C4bR5		Average	
Sample Volume	liters	139.675		131.284		117.713		129.56	
Stack Gas Flow Rate	dscfm	680		647		594		640.33	
2,4-Dinitrotoluene	ug	< 2.35	ND	< 2.65	ND	< 2.35	ND	< 2.45	ND
	ug/dscm	< 0.59	ND	< 0.71	ND	< 0.70	ND	0.67	ND
	lbs/hr	< 1.51E-06	ND	< 1.73E-06	ND	< 1.57E-06	ND	1.60E-06	ND
	g/s	< 1.91E-07	ND	< 2.18E-07	ND	< 1.98E-07	ND	2.02E-07	ND
2,6-Dinitrotoluene	ug	< 2.35	ND	< 2.65	ND	< 2.35	ND	< 2.45	ND
	ug/dscm	< 0.59	ND	< 0.71	ND	< 0.70	ND	< 0.67	ND
	lbs/hr	< 1.51E-06	ND	< 1.73E-06	ND	< 1.57E-06	ND	< 1.60E-06	ND
	g/s	< 1.91E-07	ND	< 2.18E-07	ND	< 1.98E-07	ND	< 2.02E-07	ND
HMX	ug	< 2.35	ND	< 2.65	ND	< 2.35	ND	< 2.45	ND
	ug/dscm	< 0.59	ND	< 0.71	ND	< 0.70	ND	< 0.67	ND
	lbs/hr	< 1.51E-06	ND	< 1.73E-06	ND	< 1.57E-06	ND	< 1.60E-06	ND
	g/s	< 1.91E-07	ND	< 2.18E-07	ND	< 1.98E-07	ND	< 2.02E-07	ND
Nitroglycerin	ug	< 9.4	ND	< 10.5	ND	< 9.5	ND	< 9.8	ND
	ug/dscm	< 2.38	ND	< 2.82	ND	< 2.85	ND	< 2.68	ND
	lbs/hr	< 6.05E-06	ND	< 6.84E-06	ND	< 6.34E-06	ND	< 6.41E-06	ND
	g/s	< 7.63E-07	ND	< 8.62E-07	ND	< 7.99E-07	ND	< 8.08E-07	ND
RDX	ug	< 2.35	ND	< 2.65	ND	< 2.35	ND	< 2.45	ND
	ug/dscm	< 0.59	ND	< 0.71	ND	< 0.70	ND	< 0.67	ND
	lbs/hr	< 1.51E-06	ND	< 1.73E-06	ND	< 1.57E-06	ND	< 1.60E-06	ND
	g/s	< 1.91E-07	ND	< 2.18E-07	ND	< 1.98E-07	ND	< 2.02E-07	ND
2,4,6-Trinitrotoluene	ug	< 2.35	ND	< 2.65	ND	< 2.35	ND	< 2.45	ND
	ug/dscm	< 0.59	ND	< 0.71	ND	< 0.70	ND	< 0.67	ND
	lbs/hr	< 1.51E-06	ND	< 1.73E-06	ND	< 1.57E-06	ND	< 1.60E-06	ND
	g/s	< 1.91E-07	ND	< 2.18E-07	ND	< 1.98E-07	ND	< 2.02E-07	ND

Notes:
(A) Blank corrections have not been made to these data.
(B) Results have been reported considering both the RL and DL as reported on the laboratory results page for each fraction. To provide the most conservative emission estimates, calibrated target compounds that are not detected are reported at the RL. Values reported between the RL and MDL are incorporated into the emission estimate as reported.

Table 8-12: Proposed Feed Rates

Parameter	Demonstrated			MACT Emissions		Proposed	
	Emissions (g/s)	Feed rate (lb/hr)	Test Condition	Demonstrated (ug/dscm @ 7% O_2)	1/3 Mact Limit (ug/dscm @ 7% O_2)	Emissions (g/s)	Feed rate (lb/hr)
Chloride	9.25E-05	25.22	C4b	0.45	7	1.44E-03	392
Antimony	5.61E-09	0.12	C3	---	---	2.55E-08	0.56
Arsenic	3.10E-08	0.11	C3	0.28	0.78	8.62E-08	0.31
Barium	1.93E-07	2.46	C3	---	---	8.76E-07	11.2
Beryllium	2.19E-08	0.00085	C3	0.20	0.56	6.09E-08	0.0024
Boron	5.53E-06	0.075	C3	---	---	2.51E-05	0.34
Cadmium	8.74E-09	0.0012	C3	0.078	0.56	6.27E-08	0.0083
Chromium	2.52E-07	0.95	C3	2.26	6.28	7.01E-07	2.64
Cobalt	1.97E-08	0.0087	C3	---	---	8.94E-08	0.039
Copper	1.64E-07	0.090	C3	---	---	7.44E-07	0.41
Lead	4.26E-08	3.59	C3	0.38	2.73	3.06E-07	25.8
Manganese	7.70E-07	0.34	C3	---	---	3.49E-06	1.53
Mercury	2.40E-07	0.014	C3	2.14	2.7	3.00E-07	0.017
Nickel	1.92E-07	0.025	C4b	---	---	8.71E-07	0.11
Phosphorus	1.77E-06	0.49	C3	---	---	8.03E-06	2.25
Selenium	6.55E-08	0.0016	C3	---	---	2.97E-07	0.0072
Silver	9.53E-07	0.0026	C3	---	---	4.32E-06	0.012
Thallium	2.19E-08	0.00033	C3	---	---	9.94E-08	0.0015
Tin	2.83E-07	0.051	C3	---	---	1.28E-06	0.23
Vanadium	1.11E-07	0.0010	C3	---	---	5.04E-07	0.0046
Zinc	2.22E-06	0.069	C4b	---	---	1.01E-05	0.31

This document contained Export Control/International Traffic in Arms Regulations Information.

Appendix D-6: Human Health Risk Assessment Report for Explosive Destruction Technology (EDT) Alternatives at Blue Grass Chemical Agent-Destruction Pilot Plant with Addendum

Human Health Risk Assessment Report for Explosive Destruction Technology (EDT) Alternatives at Blue Grass Chemical Agent-Destruction Pilot Plant

Appendix 1, EDS Technology – Risk Assessment Calculations

Appendix 2, TDC Technology – Risk Assessment Calculations

Appendix 3, DAVINCH™ Technology – Risk Assessment Calculations

Appendix 4, SDC Technology – Risk Assessment Calculations

Addendum to Multi-pathway Human Health Risk Assessment Report for Explosive Destruction Technology (EDT) Alternatives at Blue Grass Chemical Agent-Destruction Pilot Plant [Revised EDS Modeling]

FRANKLIN
engineering group, inc.

381 Riverside Drive, Suite 200
Franklin, TN 37064
615/591-0058 voice
615/591-8979 fax

"This document has been reviewed by RWR and no OPSEC-sensitive information was found.

HUMAN HEALTH RISK ASSESSMENT REPORT FOR EXPLOSIVE DESTRUCTION TECHNOLOGY (EDT) ALTERNATIVES AT BLUE GRASS CHEMICAL AGENT-DESTRUCTION PILOT PLANT

Prepared for:
Bechtel Parsons Blue Grass
830 Eastern Bypass
Suite 106
Richmond, Kentucky

Prepared by:
Franklin Engineering Group, Inc.
Franklin, Tennessee

December 2012

This document has been reviewed for ITAR/EAR and no ITAR/EAR sensitive information was found.

TABLE OF CONTENTS

1.0 INTRODUCTION AND EXECUTIVE SUMMARY 1
2.0 FACILITY DESCRIPTION 7
2.1 EDT Alternatives 7
2.1.1 SDC 8
2.1.2 TDC 8
2.1.3 DAVINCH 9
2.1.4 EDS 9
2.2 EDT OPERATIONS 9
2.2.1 Feed Material Assumptions 9
2.2.2 Duration of EDT Operations 12
2.3 EDT Location 12
2.4 EDT Emission Sources 12
2.4.1 Target Compounds 12
2.3 Estimated Emission Rates 17
3.0 AIR DISPERSION AND DEPOSITION MODELING 27
3.1 Model Description 27
3.2 Emission Source Characterization 28
3.2.1 Stack Coordinates and Base Elevation 28
3.2.2 Stack Height and Building Wake Effects 28
3.2.3 Stack Gas Temperature, Flowrate and Velocity 31
3.2.4 Modeled Emission Rate and Particle-Size Distribution 31
3.3 Urban/Rural 32
3.4 Deposition Parameters 32
3.5 Meteorological Data 36
3.6 Receptor Grid and Terrain 36
3.7 Chemical-Specific Parameters 38
3.8 Modeling Results 38
4.0 EXPOSURE SCENARIO IDENTIFICATION 56
4.1 Use of HHRAP Recommended Default Model Parameters 56
4.2 Special On-site and Off-site Water Body Considerations 59
4.3 Exposure Period Considerations 59
5.0 TOXICITY DATA 60
6.0 RISK RESULTS 66
6.1 Characterization of Carcinogenic Health Effects 67
6.2 Characterization of Non-Carcinogenic Health Effects 67

6.3 Characterization of Acute Health Effects 69
6.4 Results for Each EDT Technology 69
6.4.1 EDS Results *69*
6.4.2 TDC Results *69*
6.4.3 DAVINCH Results *69*
6.4.4 SDC Results *69*
6.5 Summary and Cumulative EDT and BGCAPP Risk and Hazard Results 69
7.0 UNCERTAINTY IN HUMAN HEALTH RISK ASSESSMENT 89
7.1 Types of Uncertainty 89
7.1.1 Variable Uncertainty *90*
7.1.2 Model Uncertainty *91*
7.1.3 Decision-Rule Uncertainty *91*
7.1.4 Variability *91*
7.2 Qualitative Uncertainty 92
7.3 Quantitative Uncertainty 92
8.0 CONCLUSION/RECOMMENDATION 93

LIST OF TABLES

Table 1-1 Summary Results of Multi-Pathway Human Health Risk Assessment 6
Table 2-1 BGCAPP EDT Processing Rates 11
Table 2-2 Source Characteristics Required for Air Modeling 13
Table 2-3 Compounds of Potential Concern for EDT Facility 14
Table 2-4 EDT Emissions by Technology Alternative 18
Table 3-1 Seasonal Categories 33
Table 3-2 Land Use Categories 34
Table 3-3 Chemical-Specific Values 39
Table 3-4 Modeling Run Types and Counts 42
Table 3-5 Particle/Particle-Bound Phase Modeling Maxima Summary 43
Table 3-6 Vapor Phase Modeling Maxima Summary – Concentration 44
Table 3-7 Vapor Phase Modeling Maxima Summary - Total Deposition 47
Table 3-8 Vapor Phase Modeling Maxima Summary - Dry Deposition 50
Table 3-9 Vapor Phase Modeling Maxima Summary - Wet Deposition 53
Table 4-1 Selected Exposure Scenarios and Associated Exposure Pathways 57
Table 5-1 MPHHRA Toxicity Factors 61
Table 6-1 Impacts from Dioxin-Like PCBs, PCDDs, and PCDFs 68
Table 6-2 Total Carcinogenic Risk and Non-carcinogenic Hazard – EDS Technology 71
Table 6-3 Maximum Impact COPC Carcinogenic Risk and Non-carcinogenic Hazard – EDS Technology 72
Table 6-4 Total Carcinogenic Risk and Non-carcinogenic Hazard – DAVINCH Technology 75
Table 6-5 Maximum Impact COPC Carcinogenic Risk and Non-carcinogenic Hazard – DAVINCH Technology 76
Table 6-6 Total Carcinogenic Risk and Non-carcinogenic Hazard – TDC Technology 79
Table 6-7 Maximum Impact COPC Carcinogenic Risk and Non-carcinogenic Hazard – TDC Technology 80
Table 6-8 Total Carcinogenic Risk and Non-carcinogenic Hazard – SDC Technology 83
Table 6-9 Maximum Impact COPC Carcinogenic Risk and Non-carcinogenic Hazard – SDC Technology 84
Table 6-10 Summary of Incremental EDT Impacts and Cumulative BGCAPP Impacts 87
Table 6-11 Summary Results of Multi-Pathway Human Health Risk Assessment 88

LIST OF FIGURES

Figure 3-1 BGAD Property Location 29
Figure 3-2 BGAD Source and Building Locations 30
Figure 3-3 Wet Scavenging Rate Coefficient as a Function of Particle Size 35
Figure 3-4 BGAD Receptor Grid 37

APPENDICES

Appendix 1 Risk Assessment Calculations – EDS Technology
Appendix 2 Risk Assessment Calculations – DAVINCH Technology
Appendix 3 Risk Assessment Calculations – TDC Technology
Appendix 4 Risk Assessment Calculations – SDC Technology

DEFINITIONS

AEGL-1 – Acute Exposure Guideline Level 1
AERMAP – AERMOD's terrain preprocessor
AERMET – AERMOD's meteorological data preprocessor
AERMOD – American Meteorological Society/Environmental Protection Agency Regulatory Model
AMS – American Meteorological Society
BGAD – Blue Grass Army Depot
BGCAPP – Blue Grass Chemical Agent Destruction Pilot Plant
BPIP – Building Profile Input Program
CBL – Convective Boundary Layer
COPC – Constituent of Potential Concern
CPF – Cumulative Probability Density Function
CSF – Cancer Slope Factor
CWC – Chemical Weapons Convention
DAVINCH – Detonation of Ammunition in a Vacuum Integrated Chamber
EA – Environmental Assessment
EDS – Explosive Destruction System
EDT – Explosive Destruction Technology
EPA – Environmental Protection Agency
Final HHRAP – 2005 Human Health Risk Assessment Protocol Guidance for Hazardous Waste Combustion Facilities
GEP – Good Engineering Practice
HEPA – High Efficiency Particulate Air Filter
HI – Hazard Index
HIA – Acute Hazard Index
HQ – Hazard Quotient
HQA – Acute Hazard Quotient
IRIS – Integrated Risk Information System
ISCST3 – Industrial Source Complex Short Term, Ver. 3 Air Model
MPHHRA – Multi-Pathway Human Health Risk Assessment
MRL – Toxicity Criteria Database ATSDR Minimal Risk Level
NAD27 – North American Datum 1927
NEPA – National Environmental Policy Act
OEHHA – California EPA - Office of Environmental Health Hazard Assessment
OGT – Off-Gas Treatment
OSWER – Office of Solid Waste and Emergency Response
PSD – Particle Size Distribution
PRIME – Plume Rise Model Enhancements
RfC – Reference Concentration
RfD – Reference Dose toxicity value
RSL – USEPA Risk Screening Level
SBL – Stable Boundary Layer
SCWO – Supercritical Water Oxidation
SDC – Static Detonation Chamber

DEFINITIONS (Continued)

SDC1 – SDC process stack source
SDC2 – SDC building vent source
SPB – Supercritical Water Oxidation Processing Building
TDC – Transportable Detonation Chamber
TEEL-1 – United States Department of Energy Temporary Emergency Exposure Limits.
TOCDF – Tooele Chemical Agent Disposal Facility
UTM – Universal Transverse Mercator
WTS – Waste Transfer Sub-system

1.0 INTRODUCTION AND EXECUTIVE SUMMARY

The U.S. Army is destroying the nation's stockpile of lethal chemical agents and munitions under Congressional directive (Public Law 99-145) and an international treaty called the Chemical Weapons Convention (CWC). In response to the congressional directive and CWC, the U.S. Army has initiated the design, construction, and limited duration operation of a facility to destroy the types of chemical munitions stored at Blue Grass Army Depot (BGAD) Kentucky. The BGAD stockpile includes mustard agent (type H) contained in 155-mm projectiles. Four Explosive Destruction Technology (EDT) alternatives are being evaluated for destruction of this portion of the stockpile at the Blue Grass Chemical Agent Destruction Pilot Plant (BGCAPP). This evaluation includes an Environmental Assessment (EA) which is a requirement under the National Environmental Policy Act (NEPA) prior to initiating a significant federal government action. In support of the EA, a screening-level Multi-Pathway Human Health Risk Assessment (MPHHRA) was performed to estimate the potential impacts to human health.

Each of the four different EDT options was considered independently in this MPHHRA. The multi-pathway risk assessment results are provided to document the comparison of threshold toxicological factors to estimated emissions for the four treatment technologies being evaluated. The MPHHRA generally follows the U.S. EPA guidance document, Human Health Risk Assessment Protocol for Hazardous Waste Combustion Facilities, Final (September 2005) and EPA's Guideline on Air Quality Models (40 CFR, Part 51, Appendix W).

Estimated emissions of compounds were modeled in their movement through the environment to the local population and subsequently compared to acceptable exposure concentrations of those compounds. This report describes the risk assessment and air modeling methodologies used, including default parameters and exclusions, and inputs and outputs for the air modeling. The following paragraphs describe the methodology and the general steps used to complete this MPHHRA and summarize the results.

- Each of the four technologies was evaluated to develop a list of compounds anticipated to be emitted from the treatment process. The estimated emissions for each compound emitted from each of the four EDT options were then determined based on information provided by vendors of the specific technologies and engineering judgment. These emission rates were used in combination with the projected munitions feed plan to generate a maximum design emission rate for each Constituent of Potential Concern (COPC) emitted by each EDT alternative.

- The emission estimates, along with air dispersion modeling using site-specific conditions were used to determine concentrations of pollutants released to the environment through various exposure pathways. The air dispersion model selected for this purpose (AERMOD) is named for the American Meteorological Society/Environmental Protection Agency Regulatory Model. AERMOD quantifies atmospheric concentrations and deposition of the target COPCs within 10 km of the facility emission point. In general, only off-property locations were used to evaluate exposure to human receptors, except that receptors were placed on selected water bodies within the Blue Grass Army Depot's boundaries to ensure that all appropriate exposure scenarios were considered. Maximum total COPC-specific air concentrations and deposition were used to calculate risk and hazard.

- Based on site-specific conditions and guidance recommendations, exposure pathways were selected to allow quantification of chronic impacts to adult and child residents, farmers, and fishers. COPC concentrations for each of the corresponding exposure media for each of these pathways were calculated. Both direct impacts from inhalation of pollutants and indirect impacts through other contaminated media; such as surface water, home-grown produce and livestock, were included in the assessment. Chronic and acute health effects were also considered. Health effects from all pollutants are summed in the risk assessment to determine a cumulative risk and hazard estimate for each of the treatment technologies for each of the exposure scenarios. By comparing estimated concentrations of pollutants to accepted toxicological factors that indicate threshold levels for both cancer and non-cancer health effects in humans, conclusions may be made regarding the acceptability of the individual EDT alternatives at the designated facility.

The results of this MPHHRA are summarized in Table 1-1 and demonstrate that emissions from each of the four EDT alternatives meet acceptable risk and hazard thresholds. A summary of the MPHHRA results are as follows:

- A total of 77 COPCs were identified by the four EDT vendors, published literature, or engineering calculations. Of the 77 COPCs, 26 have carcinogenic toxicity factors, 66 have chronic non-carcinogenic toxicity factors, and 71 have acute toxicity factors.
- The maximum lifetime cancer risk to any human receptor presented by the worst-case EDT option is 4.0 E-08, which is less than 1 % of the acceptable risk level of 1 in 100,000 (i.e., 1.0 E-05). When added to the risk calculated in 2010 for BGCAPP operations, the maximum lifetime cancer risk is only 2 % of the acceptable risk level. Emissions from the TDC alternative result in this lifetime cancer risk for the adult farmer.

- For non-carcinogenic effects, the maximum combined Hazard Index (HI) to any human receptor presented by the worst-case EDT option is 0.00l3, which is less than 1 % of the acceptable level of 0.25. When added to the HI calculated in 2010 for BGCAPP operations, the maximum lifetime HI is 0.0137, only 5 % of the acceptable risk level. This worst-case HI is based on the TDC alternative result for the farmer child exposure scenario.
- The total acute HI (i.e., the hazards associated with short-term emission release events for each COPC that has both a quantified short-term emission rate and an available acute toxicity value) presented by the worst-case EDT option is the TDC alternative, which is less than 1 % of the acceptable level of 0.25. When combined with the BGCAPP acute HI, the worst-case option is about 10 % of the acceptable level.

The results presented in this MPHHRA report demonstrate that EDT emissions will produce exposures that are well below all specified risk and hazard threshold values, even when added to previously-acquired risk and hazard estimates for other BGCAPP operations. This evaluation includes consideration of quantifiable uncertainty parameters, employs very conservative assumptions, and represents a reasonable worst-case estimate of potential impacts.

Care was taken at each step in the risk assessment process to ensure that conservative (i.e., reasonable worst-case) estimates of the potential risk and hazard were derived. By selecting conservative estimates at each juncture of the risk assessment process, the final risk assessment results are indicative of an estimate of risk and hazard that exceeds the worst possible health effect that an individual would experience which assures that it is protective of human health. If the resulting risk and hazard estimates exceed the accepted thresholds for those parameters, more detailed site-specific values could be determined to refine the risk assessment model and more closely model actual conditions. However, the screening-level results are well within acceptable guidelines, so further refinement of the conservative screening assumptions is not necessary.

Table 1-1
Summary Results of Multi-Pathway Human Health Risk Assessment

Hazard and Risk Characterization from EDT Facility Only									
Exposure Scenario	**Scenario Location**	**Total Cancer Risk (Benchmark = 1E-05)**				**Total Hazard Index (Benchmark = 0.25)**			
		Davinch	EDS	TDC	SDC	Davinch	EDS	TDC	SDC
Adult Resident	Rmax	2.01E-08	3.05E-10	2.42E-08	4.65E-10	0.000681	0.0000085	0.00120	0.000011
Child Resident	Rmax	4.16E-09	6.15E-11	4.89E-09	9.35E-11	0.000710	0.0000086	0.00121	0.000011
Fisher	Rmax	2.01E-08	3.05E-10	2.42E-08	4.65E-10	0.000681	0.0000085	0.00120	0.000011
Fisher Child	Rmax	4.16E-09	6.15E-11	4.89E-09	9.36E-11	0.000710	0.0000086	0.00121	0.000011
Farmer	Fmax	**3.26E-08**	**4.07E-10**	**4.03E-08**	**1.38E-09**	0.000868	0.0000085	0.00125	0.000016
Farmer Child	Fmax	5.43E-09	6.15E-11	6.60E-09	2.57E-10	**0.000985**	**0.0000086**	**0.00129**	**0.000018**
Acute Exposure	Amax	--	--	--	--	0.000246	0.0000104	**0.00083**	0.000395
Worst-Case Hazard and Risk Characterization from EDT Facility and BGCAPP Facility									
Farmer	Fmax	2.13E-07	1.80E-07	**2.20E-07**	1.81E-07				
Farmer Child	Fmax					0.013385	0.0124086	**0.01369**	0.012418
Acute Exposure	Amax	--	--	--	--	0.025846	0.0256104	**0.02643**	0.025995

Notes:

[a] US EPA Region 6 recommends that a hazard index benchmark of 0.25 be utilized to account for COPCs (compounds of potential concern) in areas with industrial activity. Although significant industrial activities do not exist near BGCAPP, this very conservative benchmark was used for comparison to emissions to ensure risks were not underestimated.

[b] The acute risk assessment scenario evaluates short-term 1-hour maximum air concentrations based on hourly emission rates. Inhalation is the route of exposure.

2.0 FACILITY DESCRIPTION

The Blue Grass Army Depot (BGAD) encompasses nearly 15,000 acres in Madison County, southeast of Richmond, KY. The area surrounding the Depot is primarily agricultural and rural. Within this site, the Blue Grass Chemical Agent-Destruction Pilot Plant (BGCAPP) is under construction with the objective of safely and efficiently destroying the stockpile of chemical weapons currently in storage at the Depot. The plant is projected to destroy 523 tons of munitions containing blister and nerve agents.

The pilot plant is under construction on a variety of facilities to support chemical agent processing, energetic processing, control and storage, munitions storage, entry control, utility, laboratory analysis, personnel maintenance and other tasks. The primary method of destruction includes disassembly to allow the separation of chemical agent and energetic, which are chemically mixed to destroy the chemical agent using hydrolysis. Following neutralization, agent and energetic hydrolysates are to be fed to Supercritical Water Oxidation (SCWO) units to destroy the organic materials. Metal parts are cleaned by high-pressure washing, thermally decontaminated and subsequently recycled. Off-gases from treatment are treated in a thermal oxidizer, sent through a cyclone and scrubber, and filtered through a series of HEPA and carbon beds before being released to the atmosphere.

However, the Blue Grass Chemical Agent-Destruction Pilot Plant (BGCAPP) may also include the use of an Explosive Destruction Technology (EDT) to safely destroy problematic munitions currently in storage at the Blue Grass Army Depot. The Levinstein (H) mustard projectiles in the Blue Grass chemical weapons stockpile contain the oldest mustard remaining in the inventory. Similar projectiles that were manufactured in the same lots as those stored at Blue Grass were processed at Tooele Chemical Agent Disposal Facility (TOCDF), Utah, in 2008-2009. These projectiles showed large amounts of agent solidification, called "heels." Problems were also encountered with degraded bursters and burster wells.

The final results of an X-ray assessment conducted in 2011 indicate that destruction of this portion of the Blue Grass stockpile could be difficult using BGCAPP's current planned neutralization and SCWO technology. This risk assessment supports the NEPA environmental assessment of EDT alternatives that might more effectively process these problematic munitions.

2.1 EDT Alternatives

Four EDTs are considered for this MPHHRA:

1. Dynasafe's Static Detonation Chamber (SDC),
2. CH2M Hill's Transportable Detonation Chamber (TDC),
3. Kobe Steel's Detonation of Ammunition in a Vacuum Integrated Chamber (DAVINCH), and
4. US Army's Explosive Destruction System (EDS).

Each EDT includes one or more individual treatment units. Support facilities include, electrical equipment, generators, air compressors, and other utility supplies; buildings that will be used for storage and maintenance; buildings for access control; and buildings for other support functions. None of these support facilities will be significant emission sources of COPCs, and are not included in the MPHHRA.

2.1.1 SDC

The SDC is a thermal destruction method for munitions. Chemical munitions are placed in a carrier, conveyed to the top of the SDC vessel, and fed into a detonation chamber, which is indirectly heated by electricity and operates at a temperature in excess of 1,000 °F. The destruction of the munitions is achieved by heating the item above the auto initiation temperature for the energetic materials, resulting in their detonation or deflagration. Agent released from the detonation or deflagration event is pyrolized by the detonation/deflagration and the temperatures existing within the detonation chamber. Gases generated as a result of the detonation are treated by an off-gas system that includes a thermal oxidizer to convert carbon monoxide and hydrogen into carbon dioxide and water. The SDC detonation chamber and off-gas treatment system (OTS) are enclosed in an environmental enclosure. Exhaust from the SDC process OTS is sent to a filter system for final clean-up. This filter system is located in a separate enclosure, and its stack has a chemical agent monitor. Air from the environmental enclosure is exhausted through a separate filter system and stack. This enclosure air filter system is located in another, separate enclosure and also has an agent monitor.

2.1.2 TDC

The TDC consists of a detonation chamber, an expansion chamber, and an emission control system. The TDC is considered a "cold" detonation technology because the detonation chamber is not heated. Instead, munitions are wrapped in explosive and placed in the detonation chamber and detonated to destroy the chemical agent and energetics. The chamber's floor is covered in pea gravel, which absorbs some of the blast energy. Bags of water within the chamber also absorb blast energy and produce steam, which reacts with and destroys agent vapors.

Each TDC unit is enclosed in an environmental enclosure. Gases produced by the detonation are vented to the expansion chamber and then to the emissions control system. A catalytic oxidation unit oxidizes hydrogen, carbon monoxide, and organic vapors before the gas stream is vented through a carbon absorption bed and released within the environmental enclosure. All air within the environmental enclosure is then discharged through a pair of identical building air filtration systems and stacks, each equipped with a chemical agent monitor.

2.1.3 DAVINCH

The DAVINCH is composed of a steel vacuum detonation chamber and an OTS. The DAVINCH system is also considered a "cold" detonation technology. Chemical munitions are placed in the DAVINCH detonation chamber where they are surrounded by donor explosives. The detonation of these donor explosives shatters the munitions, and the shock and heat of the explosion destroys the chemical agent and energetics. Off gases produced by the detonation are treated by a cold plasma oxidizer which converts carbon monoxide into carbon dioxide.

The DAVINCH process is enclosed in an environmental enclosure. Exhaust from the DAVINCH process OTS is combined with building ventilation air from the environmental enclosure, vented through an air filtration unit, and discharged through a single stack equipped with a chemical agent monitor.

2.1.4 EDS

The EDS uses explosive charges to explosively access chemical munitions, eliminating their explosive capacity before the chemical agent is neutralized. The system's main component, a sealed, stainless steel vessel, contains all the blast, vapor, and fragments from the process. Agent treatment is confirmed by sampling residual liquid and air from the vessel prior to reopening the EDS.

Each EDS has a Waste Transfer Sub-system (WTS) that receives liquid and gaseous wastes from the EDS vessel. The WTS has a canister filter that contains silica gel and activated carbon. The canister filter is changed after each batch of munitions treated in the EDS. Potential fugitive emissions associated with canister filter changeout are assumed to be negligible. Each EDS unit is enclosed in an environmental enclosure. Emissions from the WTS canister filter are combined with enclosure air prior to passing through an air filtration unit and exiting the stack, which is equipped with a chemical agent monitor.

2.2 EDT OPERATIONS

2.2.1 Feed Material Assumptions

Table 2-1 presents the quantity of feed materials and anticipated processing schedule by the EDT alternatives.

Table 2-1
BGCAPP EDT Processing Rates

EDT Technology	Leakers				
	Demand Rate (munitions/hr)	Availability Factor	Effective Processing Rate		
			munitions/hr	munitions/day	munitions/week
SDC2000			0.29	7.0	49.1
TDC60			0.55	13.1	92.0
DV60			0.73	17.5	122.6
EDS			0.085	0.85	5.1

EDT Technology	Rejects				
	Demand Rate (munitions/hr)	Availability Factor	Effective Processing Rate		
			munitions/hr	munitions/day	munitions/week
SDC2000			3.80	91.1	637.7
TDC60			1.24	29.8	208.5
DV60			1.46	35.0	245.3
EDS			0.51	5.1	30.6

EDT Technology	Quantity of Leakers in the campaign	Quantity of Rejects in the campaign	Effective Weekly Processing Rate Per Unit		Weeks Required to Process with One Unit	Weeks Available	Number of Units Required	Weeks Required to Process with Multiple Units	Uncommitted Machine Weeks Available
			Leakers	Rejects					
SDC2000									
TDC60									
DV60									
EDS									

2.2.2 Duration of EDT Operations

The EDT specification for all four alternatives provides for operation 12 hours per day, 7 days per week during a period of operation. Based on this schedule, the following number of each type of EDT is required: SDC unit; TDC units; DAVINCH units; or EDS units.

2.3 EDT Location

The selected EDT will be located at the BGCAPP facility. The EDT site location within the BGAD facility is described more fully in Section 3.2 of this report.

2.4 EDT Emission Sources

The four EDT Alternatives each result in emissions of different Compounds of Potential Concern (COPCs) with different emission rates. For three of the technologies, a single stack will be used to model stack gas emissions. Although it is possible that the configuration or stack parameters for these technologies may change because complete vendor information regarding the technologies is not available at this time, the following stack characteristics are assumed for this MPHHRA.

Emissions from each of the four treatment technologies will be modeled separately and evaluated separately for risk and hazard. All emissions of COPCs from both TCD units are air modeled as if the emissions are vented from one 50 foot stack. All emissions from the two DAVINCH units are air modeled as if the emissions are vented from one 50 foot stack. All emissions from the EDS units are air modeled as if the emissions are vented from one 50 foot stack. COPC emissions from the one SDC unit will be primarily vented from one 50 foot process stack, but emissions from the environmental enclosure building described in Section 2.1.1 will be vented from a 16 foot building vent. The characteristics of these emissions sources are summarized in Table 2-2.

2.4.1 Target Compounds

A list of possible COPCs was developed by ERM Consulting & Engineering based on vendor information regarding potential EDT emissions and evaluation of munitions intended for destruction.

The COPCs were evaluated separately for each technology and are shown by technology in Table 2-3.

Table 2-2
Source Characteristics Required for Air Modeling

Source Characteristics		SDC 1 Process Stack	SDC 2 Enclosure Stack	TDC Stack 2 Units	DAVINCH Stack 2 Units	EDS Stack 14 Units
[redacted]	[redacted]	[redacted]	[redacted]	[redacted]	[redacted]	[redacted]
Base Elevation	[redacted]	[redacted]	[redacted]	[redacted]	[redacted]	[redacted]
Height	m	15.24	4.9	15.24	15.24	15.24
	ft	50	16	50	50	50
Diameter	m	0.3	0.91	0.85	0.76	2.29
	ft	1.0	3.0	2.8	2.5	7.5
Temperature+	K	324	amb*	amb.+5.5*	amb*	300
	°F	124	amb*	amb.+10*	amb*	81
Velocity+	m/s	5.08	11.5	18.2	32.8	9.7
	ft/s	16.7	37.7	59.7	108	31.7
Emission Rate	g/s	1	1	1	1	1
	lb/hr	7.92	7.92	7.92	7.92	7.92
Mean Particle Size+	Microns	0.3	0.3	0.3	0.3	0.3
Mass Fraction#	(dimensionless)	1	1	1	1	1
Particle Density	g/cm^3	1	1	1	1	1

+ Source characteristics provided by MPHRA Report from Pueblo Army Depot.
** AERMOD feature that allows seasonal variation in temperature utilized for modeling.*
 # Mass Fraction of particles in the fine mode = 100%.

Table 2-3
Compounds of Potential Concern for EDT Facility

	CAS	Chemical Grouping	COPC				
			SDC1	SDC2	TDC	DAVINCH	EDS
1,1,1-trichloroethane	71-55-6	Organic	✓				
1,1-dichloroethane	75-34-3	Organic	✓				
1,1-dichloroethene	75-35-4	Organic	✓				
1,2-dichloroethane	107-06-2	Organic	✓				
1,2-dichloropropane	78-87-5	Organic	✓				
1,3-butadiene	106-99-0	Organic	✓				
1,4-dioxane	123-91-1	Organic			✓		
2-butanone	78-93-3	Organic	✓		✓		
acetone	67-64-1	Organic	✓		✓		✓
benzene	71-43-2	Organic	✓		✓		
benzoic acid	65-85-0	Organic	✓				
benzyl alcohol	100-51-6	Organic	✓				
bis(2-ethylhexyl)-phthalate	117-81-7	Organic	✓		✓		✓
bromodichloromethane	75-27-4	Organic	✓				
bromomethane	74-83-9	Organic	✓				
carbon disulfide	75-15-0	Organic	✓				✓
carbon tetrachloride	56-23-5	Organic	✓				
chlorobenzene	108-90-7	Organic	✓				
chloroform	67-66-3	Organic	✓				
chloromethane	74-87-3	Organic	✓		✓		
cis-1,3-dichloropropene	542-75-6	Organic	✓				
dibromochloromethane	124-48-1	Organic	✓				
dichlorodifluoromethane	75-71-8	Organic	✓		✓		
di-n-butyl phthalate	84-74-2	Organic	✓		✓		
di-n-octyl phthalate	117-84-0	Organic			✓		
ethane	74-84-0	Organic			✓		
ethanol	64-17-5	Organic					✓
ethylbenzene	100-41-4	Organic	✓				
Freon 113	76-13-1	Organic	✓				
H	505-60-2	Organic	✓	✓	✓	✓	✓
hexane	110-54-3	Organic	✓				
methane	74-82-8	Organic			✓		✓
methylene chloride	75-09-2	Organic	✓				✓

Table 2-3
Compounds of Potential Concern for EDT Facility (continued)

	CAS	Chemical Grouping	COPC				
			SDC1	SDC2	TDC	DAVINCH	EDS
naphthalene	91-20-3	Organic			✓		
styrene	100-42-5	Organic	✓				
tetrachloroethene	127-18-4	Organic	✓				
toluene	108-88-3	Organic	✓		✓		✓
trans-1,3-dichloropropene	10061-02-6	Organic	✓				
trichloroethene	79-01-6	Organic	✓				
trichlorofluoromethane	75-69-4	Organic	✓		✓		
vinyl chloride	75-01-4	Organic	✓			✓	✓
xylenes	1330-20-7	Organic	✓			✓	
1,2,3,4,6,7,8-HpCDD	35822-46-9	PCDDs, PCDFs, PCBs			✓		
1,2,3,4,6,7,8,9-OCDD	3268-87-9	PCDDs, PCDFs, PCBs			✓		
2,3,7,8-TCDF	51207-31-9	PCDDs, PCDFs, PCBs	✓				
1,2,3,4,6,7,8-HpCDF	67562-39-4	PCDDs, PCDFs, PCBs			✓		
1,2,3,4,6,7,8,9-OCDF	39001-02-0	PCDDs, PCDFs, PCBs			✓		
3,3',4,4'-TCB (PCB 77)	32598-13-3	PCDDs, PCDFs, PCBs				✓	
2,3',4,4',5-PeCB (PCB 118)	31508-00-6	PCDDs, PCDFs, PCBs				✓	
2,3,3',4,4'-PeCB (PCB 105)	32598-14-4	PCDDs, PCDFs, PCBs				✓	
ammonia	7664-41-7	Inorganic			✓		
aluminum	91728-14-2	Inorganic					✓
antimony	7440-36-0	Inorganic	✓		✓		
arsenic	7440-38-2	Inorganic	✓		✓		✓
barium	7440-39-3	Inorganic	✓		✓		
beryllium	7440-41-7	Inorganic	✓		✓		
boron	7440-42-8	Inorganic	✓				
cadmium	7440-43-9	Inorganic	✓		✓		✓
chlorine	7782-50-5	Inorganic			✓		
chromium (3+)	16065-83-1	Inorganic	✓		✓		✓
chromium (6+)	18540-29-9	Inorganic	✓		✓		✓

Table 2-3
Compounds of Potential Concern for EDT Facility (continued)

	CAS	Chemical Grouping	COPC				
			SDC1	SDC2	TDC	DAVINCH	EDS
cobalt	7440-48-4	Inorganic	✓		✓		
copper	7440-50-8	Inorganic	✓		✓	✓	✓
hydrogen chloride	7647-01-0	Inorganic			✓	✓	
iron	7439-89-6	Inorganic			✓		
lead	7439-92-1	Inorganic	✓		✓	✓	✓
manganese	7439-96-5	Inorganic	✓				
mercuric chloride	7487-94-7	Inorganic					
methyl mercury	22967-92-6	Inorganic					
elemental mercury	7439-97-6	Inorganic	✓		✓	✓	✓
nickel	7440-02-0	Inorganic	✓		✓		
phosphorus	7723-14-0	Inorganic	✓				
selenium	7782-49-2	Inorganic	✓		✓		
silver	7440-22-4	Inorganic	✓		✓		✓
tin	7440-31-5	Inorganic	✓				
vanadium	7440-62-2	Inorganic			✓		
zinc	7440-66-6	Inorganic	✓		✓		

The four EDT alternatives were modeled independently to assess the overall risks and hazards of emissions from each EDT unit.

2.3 Estimated Emission Rates

Estimated emission rates were also developed by ERM Consulting & Engineering based on vendor information regarding potential EDT emissions and evaluation of munitions intended for destruction of HAPs. The estimated emission rate for each COPC from each process stack and the SDC building stack are provided in Table 2-4. The estimated COPC emission rates are not intended to be estimates of actual emissions rates for the COPCs, as a number of very conservative assumptions were used to ensure that the overall toxicity and magnitude of emissions were not underestimated.

Table 2-4
EDT Emissions by Technology Alternative

Chemical of Potential Concern (COPC)	CAS Number	SDC	TDC	DAVINCH	EDS			
		Overpacks/ Rejects	Overpacks/ Rejects	Overpacks/ Rejects	Agent		Explosive	
		Emissions Rate (g COPC/s) [a, b]	Emissions Rate (lb COPC/hr) [c]	Emissions Rate (lb COPC/hr) [d]	Emission Factor (after controls) (g COPC/lb H)		Emission Factor (after controls) (g COPC/lb NEW)	
Volatile Organic Compounds								
acetone	67-64-1	5.85E-06	3.30E-02		8.52E-05	4.14E-03		
acetaldehyde	75-07-0	U	U					
benzene	71-43-2	<5.52E-07	9.80E-04					
bromodichloromethane	75-27-4	<1.03E-06	U	--				
bromoform	75-25-2	<9.93E-07 ND	U	--				
2-butanone	78-93-3	<3.93E-06	2.30E-03	U				
carbon disulfide	75-15-0	<7.44E-07	U		4.10E-05	1.99E-03		
carbon tetrachloride	56-23-5	<2.06E-06	<1.9E-3					
chlorobenzene	108-90-7	<3.82E-07	<1.4E-3	U				
1-chlorobutane	109-69-3	U	U	U				
2-chlorobutane	78-86-4	U	U	U				
chloroethane	75-00-3	<1.99E-06 ND	<8.1E-4	U				
2-chloroethoxyethane	112-26-5	U	U	U				
chloroform	67-66-3	<6.00E-06	<1.5E-3					
chloromethane	74-87-3	<2.05E-06	2.50E-04					
chloromethoxyethane	3188-13-4	U	U	U				
dibromochloromethane	124-48-1	<7.53E-07	U	--				
1,2-dichlorobutane	616-21-7	U	U	U				
1,1-dichloroethane	75-34-3	<3.76E-07	<1.2E-3	U				
1,2-dichloroethane	107-06-2	<3.81E-07	<1.2E-3	U				

Table 2-4
EDT Emissions by Technology Alternative (Continued)

Chemical of Potential Concern (COPC)	CAS Number	SDC	TDC	DAVINCH	EDS			
		Overpacks/ Rejects	Overpacks/ Rejects	Overpacks/ Rejects	Agent		Explosive	
		Emissions Rate (g COPC/s) [a, b]	Emissions Rate (lb COPC/hr) [c]	Emissions Rate (lb COPC/hr) [d]	Emission Factor (after controls) (g COPC/lb H)		Emission Factor (after controls) (g COPC/lb NEW)	
1,1-dichloroethene	75-35-4	<3.45E-07	<1.2E-3					
1,2-dichloropropane	78-87-5	<4.59E-07	<1.4E-3	U				
cis-1,3-dichloropropene	10061-01-5	<4.61E-07	<1E-3	U				
trans-1,3-dichloropropene	10061-02-6	<4.89E-07	U	U				
diethyl ether	60-29-7	U	U	U				
1,4-dioxane	123-91-1	U	1.20E-03	U				
1,4-dithiane	505-29-3	U	U	U				
ethane	74-84-0	U	<0.38					
ethene	74-85-1	U	<0.35					
ethylbenzene	100-41-4	<4.87E-07	<1.3E-3					
2-ethyl 1,3-butadiene	3404-63-5	U	U					
n-hexane	110-54-3	<8.53E-07	<0.31					
2-hexanone	591-78-6	<4.14E-06 ND	0.0012	U				
1-hexene	592-41-6	U	U					
methane	74-82-8	U	<0.16	--	2.74E-02	1.33E+00	4.04E-02	3.87E+01
methylene chloride	75-09-2	4.84E-06	<2.9E-3					
4-methyl-2-pentanone	108-10-1	<4.14E-06 ND	<1.2E-3	U				
octane	111-65-9	U	U					
1,4-oxathiane	15980-15-1	U	U	U				
pentane	109-66-0	U	<0.26					
propene	115-07-1	U	U					
styrene	100-42-5	<3.47E-07	<1.3E-3					

Table 2-4
EDT Emissions by Technology Alternative (Continued)

Chemical of Potential Concern (COPC)	CAS Number	SDC	TDC	DAVINCH	EDS			
		Overpacks/ Rejects	Overpacks/ Rejects	Overpacks/ Rejects	Agent		Explosive	
		Emissions Rate (g COPC/s) [a, b]	Emissions Rate (lb COPC/hr) [c]	Emissions Rate (lb COPC/hr) [d]	Emission Factor (after controls) (g COPC/lb H)		Emission Factor (after controls) (g COPC/lb NEW)	
styrene	100-42-5	<3.47E-07	<1.3E-3					
tert-butyl alcohol	75-65-0	U	U	U				
1,1,1,2-tetrachloroethane	630-20-6	<5.00E-07 ND	U	U				
1,1,2,2-tetrachloroethane	79-34-5	<9.93E-07 ND	<2.1E-3	U				
tetrachloroethene	127-18-4	<4.44E-07	<2.1E-3	U				
toluene	108-88-3	<2.90E-07	<5.5E-3		3.95E-05	1.92E-03		
1,2,3-trichlorobenzene	87-61-6	U	U	U				
1,1,1-trichloroethane	71-55-6	<7.93E-07	U	U				
trichloroethene	79-01-6	<4.41E-07	<1.6E-3	U				
1,2,4-trimethyl benzene	95-63-6	U	<1.5E-3	U				
vinyl chloride	75-01-4	<5.69E-07	<7.8E-3	U	7.87E-06	3.82E-04		
total xylene	108-38-3, 106-42-3, 95-47-6	<1.17E-06	<4.0E-3					
1,2-bis(ethylthio)-ethene	13105-10-7	U	U	U				
1,2-bis(vinylthio)-ethane	63938-34-1	U	U	U				
Semi-volatile Organic Compounds								
acrolein	107-02-8	U	U	U				
alpha-methylstyrene	98-83-9	U	U	U				
benzoic acid	65-85-0	<1.94E-05	< 2.2E-3	U				
benzyl alcohol	100-51-6	<1.82E-06	< 8.8E-4	U				
di-n-butyl phthalate	84-74-2	<2.05E-06	3.20E-05	U				

Table 2-4
EDT Emissions by Technology Alternative (Continued)

Chemical of Potential Concern (COPC)	CAS Number	SDC	TDC	DAVINCH	EDS			
		Overpacks/ Rejects	Overpacks/ Rejects	Overpacks/ Rejects	Agent		Explosive	
		Emissions Rate (g COPC/s) [a, b]	Emissions Rate (lb COPC/hr) [c]	Emissions Rate (lb COPC/hr) [d]	Emission Factor (after controls) (g COPC/lb H)		Emission Factor (after controls) (g COPC/lb NEW)	
diethyl phthalate	84-66-2	<2.42E-06 ND	< 4.4E-4	U				
dimethyl phthalate	131-11-3	<2.42E-06 ND	< 4.4E-4	U				
2,3-dimethyl-thiopene	632-16-6	U	U	U				
2,2-dimethyl-trans-thiirane	3772-13-2	U	U	U				
di-n-octyl phthalate	117-84-0	<2.42E-06 ND	<4.4E-4	U				
bis(2-ethylhexyl)-phthalate	117-81-7	<2.94E-06	<4.4E-4	U				
hexachloro-1,3-butadiene	87-68-3	<2.42E-06 ND	<4.4E-4	U				
hexachloroethane	67-72-1	<2.42E-06 ND	<4.4E-4	U				
2-methyl-1,3-dithiacyclopentane	5616-51-3	U	U	U				
2-methyl-1,3-dithiane	6007-26-7	U	U	U				
2-methyl-1,3-oxathiolane	17642-74-9	U	U	U				
2-methylphenol (o-cresol)	95-48-7	<2.42E-06 ND	<4.4E-4					
3-methylphenol (m-cresol)	108-39-4	<1.21E-05 ND	<4.4E-4					
4-methylphenol (p-cresol)	106-44-5	<2.42E-06 ND	<4.4E-4					
methyl-tert-butyl ether	1634-04-4	U	U	U				
naphthalene	91-20-3	<2.42E-06 ND	<4.4E-4					
thiodigylcol	111-48-8	U	U	U				
thiirane	420-12-2	U	U	U				
1,2,4-trichlorobenzene	120-82-1	<2.42E-06 ND	<4.4E-4	U				
Miscellaneous Analytes								
ammonia	7664-41-7	U	1.00E-04					
chlorine		<1.94E-05 ND	1.20E-03	U				

Table 2-4
EDT Emissions by Technology Alternative (Continued)

Chemical of Potential Concern (COPC)	CAS Number	SDC	TDC	DAVINCH	EDS			
		Overpacks/ Rejects	Overpacks/ Rejects	Overpacks/ Rejects	Agent		Explosive	
		Emissions Rate (g COPC/s) [a, b]	Emissions Rate (lb COPC/hr) [c]	Emissions Rate (lb COPC/hr) [d]	Emission Factor (after controls) (g COPC/lb H)		Emission Factor (after controls) (g COPC/lb NEW)	
HD/H	505-60-2	<8.95E-15 ND (see Note 1)	<GPL	--				
HF	7664-39-3	<8.22E-05 ND	U	--				
HCl	7647-01-0	<8.11E-05 ND	0.004	8.8E-3 lb/shot				
particulate		1.07E-04	0.05	1.1E-5 lb/shot				
Dioxins and Furans (include isomers and congener groups or the 2, 3, 7, 8 tetra-equivalents)		0.040 ng/dscm@7%O2	8.2E-13 based on TEQ	1.3E-12 lb/shot				
2,3,7,8-TCDD	1746-01-6			A				
1,2,3,7,8-PeCDD	40321-76-4			A				
1,2,3,4,7,8-HxCDD	39227-28-6			A				
1,2,3,6,7,8-HxCDD	57653-85-7			A				
1,2,3,7,8,9-HxCDD	19408-74-3			A				
1,2,3,4,6,7,8-HpCDD	35822-46-9			A				
1,2,3,4,6,7,8,9-OCDD	3268-87-9			A				
2,3,7,8-TCDF	51207-31-9			A				
1,2,3,7,8-PeCDF	57117-41-6			A				
2,3,4,7,8-PeCDF	57117-31-4			A				
1,2,3,4,7,8-HxCDF	70648-26-9			A				
1,2,3,6,7,8-HxCDF	57117-44-9			A				
1,2,3,7,8,9-HxCDF	72918-21-9			A				
2,3,4,6,7,8-HxCDF	60851-34-5			A				
1,2,3,4,6,7,8-HpCDF	67562-39-4			A				

Table 2-4
EDT Emissions by Technology Alternative (Continued)

Chemical of Potential Concern (COPC)	CAS Number	SDC	TDC	DAVINCH	EDS			
		Overpacks/ Rejects	Overpacks/ Rejects	Overpacks/ Rejects	Agent		Explosive	
		Emissions Rate (g COPC/s) [a, b]	Emissions Rate (lb COPC/hr) [c]	Emissions Rate (lb COPC/hr) [d]	Emission Factor (after controls) (g COPC/lb H)		Emission Factor (after controls) (g COPC/lb NEW)	
1,2,3,4,7,8,9-HpCDF	55673-89-7			A				
1,2,3,4,6,7,8,9-OCDF	39001-02-0			A				
3,4,4',5-TCB (PCB 81)	70362-50-4			A				
3,3',4,4'-TCB (PCB 77)	32598-13-3			5.29E-13				
3,3',4,4',5-PeCB (PCB 126)	57465-28-8			A				
3,3',4,4',5,5'-HxCB (PCB 169)	32774-16-6			A				
2',3,4,4',5-PeCB (PCB 123)	65510-44-3			A				
2,3',4,4',5-PeCB (PCB 118)	31508-00-6			1.32E-12				
2,3,3',4,4'-PeCB (PCB 105)	32598-14-4			5.29E-13				
2,3,4,4',5-PeCB (PCB 114)	74472-37-0			A				
2,3',4,4',5,5'-HxCB (PCB 167)	52663-72-6			A				
2,3,3',4,4',5-HxCB (PCB 156)	38380-08-4			A				
2,3,3',4,4',5'-HxCB (PCB 157)	69782-90-7			A				
2,3,3',4,4',5,5'-HpCB (PCB 189)	39635-31-9			A				
Metals								
antimony	7440-36-0	6.49E-09	<3.4E-5	--				
arsenic	7440-38-2	<6.47E-08	8.80E-04	--	4.77E-06	2.32E-04	1.70E-05	1.63E-02
barium	7440-39-3	2.59E-07	<6.8E-6	--				
beryllium	7440-41-7	<6.62E-09	<3.2E-6	--				
boron	7440-42-8	4.77E-06	U	--				
cadmium	7440-43-9	8.97E-09	2.90E-05	--	4.21E-06	2.04E-04		
chromium	7440-47-3	1.87E-07	<7.6E-5	--				

Table 2-4
EDT Emissions by Technology Alternative (Continued)

Chemical of Potential Concern (COPC)	CAS Number	SDC	TDC	DAVINCH	EDS			
		Overpacks/ Rejects	Overpacks/ Rejects	Overpacks/ Rejects	Agent		Explosive	
		Emissions Rate (g COPC/s) [a, b]	Emissions Rate (lb COPC/hr) [c]	Emissions Rate (lb COPC/hr) [d]	Emission Factor (after controls) (g COPC/lb H)		Emission Factor (after controls) (g COPC/lb NEW)	
cobalt	7440-48-4	1.14E-08	<1.2E-5	--				
copper	744-50-8	1.32E-07	<2.4E-5	2.2E-8 lb/shot	1.90E-05	9.23E-04	8.11E-05	7.76E-02
lead	7439-92-1	5.45E-08	<1.3E-5	3.1E-10 lb/shot	3.86E-05	1.83E-03	2.76E-05	2.64E-02
manganese	7439-96-5	5.41E-05	U	--				
mercury	7439-97-6	<2.22E-07 (see Note 2)	<1.3E-5	6.6E-9 lb/shot				
nickel	7440-02-0	2.13E-07	<1.5E-5	--				
phosphorus	7723-14-0	<2.27E-06	U	--				
selenium	7782-49-2	<9.07E-08	<9.4E-5	--				
silver	7440-22-4	7.03E-08	<8.3E-6	--	2.24E-07	1.09E-05		
thallium	7440-28-0	<2.51E-08 ND	<4.6E-5	--				
tin	7440-31-5	<3.98E-07	U	--				
vanadium	7440-62-2	<1.26E-07 ND	<6.4E-5	--				
zinc	7440-66-6	2.22E-06	<5.6E-4	--				
Other Emissions Not Listed Above (Populated by vendors)								
Total Volatile TOCs (C1 through C7, includes above)		7.29E-04						
Semivolatile Total Chromatographable Organics (C8 through C17, includes above)		4.44E-05						
Semivolatile Total Gravimetric Organics (includes above)		2.14E-04						
Total Organics (includes above)		<5.48E-03						
2,4-dinitrotoluene	121-14-2	<1.76E-07 ND						
2,6-dinitrotoluene	606-20-2	<1.76E-07 ND						
HMX (cyclotetramethylenetetranitramine)	2691-41-0	<1.76E-07 ND						

Table 2-4
EDT Emissions by Technology Alternative (continued)

Chemical of Potential Concern (COPC)	CAS Number	SDC	TDC	DAVINCH	EDS			
		Overpacks/ Rejects	Overpacks/ Rejects	Overpacks/ Rejects	Agent		Explosive	
		Emissions Rate (g COPC/s) [a, b]	Emissions Rate (lb COPC/hr) [c]	Emissions Rate (lb COPC/hr) [d]	Emission Factor (after controls) (g COPC/lb H)		Emission Factor (after controls) (g COPC/lb NEW)	
nitroglycerin	55-63-0	<7.08E-07 ND						
RDX (cyclonite)	121-82-4	<1.76E-07 ND						
2,4,6-trinitrotoluene	118-96-7	<1.76E-07 ND						
iron	7439-89-6		0.05					
calcium	7789-78-8		0.02					
propane	74-98-6		0.05					
butane	106-97-8		0.21					
dichlorodifluoromethane	75-71-8	<9.76E-07	2.90E-04					
trichlorofluoromethane	75-69-4	<5.09E-07	1.30E-04					
1,3-butadiene	106-99-0	<3.30E-07						
bromomethane	74-83-9	<1.92E-06						
Freon 113	76-13-1	<1.01E-06						
aluminum	91728-14-2				1.32E-04	6.41E-03		
1,4-dichlorobenzene	106-46-7							
acetylene	74-86-2							
bromomethane	74-83-9							
monoethanolamine	141-43-5							
nitrobenzene	98-95-3							
hydrogen cyanide	74-90-8							
ethanol	64-17-5				1.71E-04	8.31E-03		

See notes on following page:

*P=Present, A=Absent, and U=Unknown

Note: Pollutant order is as presented in the PCAPP RFP.

Note 1 - Results given for HD are for testing performed in Germany in 2007 using US protocols on a similar system. No H or HD was detected. DE for HD was greater than 99.999999986%.
Note 2 - Hg is high due to no Sulfur Impregnated activated Carbon (SIC) filter followed by activated carbon (AC) being present in the final filter to remove it.
a. The emissions rates were obtained during testing at ANCDF in July 2011 using mustard munitions and with the Pollution Abatement System (PAS) in full operation. The PAS in operation consisted of a thermal oxidizer, quench system, baghouse filter, acid and neutral scrubbers, and a chemical agent demilitarization filter bank consisting of a HEPA filter followed by a SIC filter and AC filter and a final HEPA filter before going to the stack.
b. A value with the "<" qualifier listed but without the "ND" qualifier means that the chemical species so denoted was detected, but the amount detected was below the quantitation limit for that particular chemical. In this case the quantitation limit for the chemical is reported, along with the "<" qualifier to denote that the actual value is less than the quantitation limit but is more than the detection limit. If both the "< " and the "ND" qualifiers are present this means that the chemical species denoted was not detected (i.e., was Absent). The value reported is the detection limit, and the "<" qualifier means the actual value (if any) is less than the detection limit.

c. The vendor obtained emission rates during testing at Porton Down, UK in 2006 using UK 25-pdr mustard-filled munitions. The vendor then scaled up the emission rates by a factor of 3.5 to account for the difference in mustard contained in the 25-pdr munitions compared to the 155-mm projectiles at the Pueblo Chemical Depot. Emission rates are after controls, including a candle filter with upstream lime addition for particulate and acid gas removal, a catalytic oxidizer for removal of carbon monoxide, and carbon adsorption vessels for semi-volatile compound removal. In addition, the system enclosure has a HEPA/carbon filtration unit.

d. Emission rates are after controls, including an oxidizer (cold plasma), scrubber, HEPA filter, and sulfur-impregnated charcoal filter. Emissions are in units of pounds per hour unless otherwise noted.

3.0 AIR DISPERSION AND DEPOSITION MODELING

Methodologies and models utilized for this project are as described in the following sections and are in accordance with common practice and regulatory guidance. Any deviations from common practice or regulatory guidance are described in the following sections.

3.1 Model Description

The AMS/EPA Regulatory Model, AERMOD (version 12060), is used for this analysis since it is the preferred model listed in EPA's "Guideline on Air Quality Models". This air model replaced the previous US EPA preferred model, ISCST3.

Using a relatively simple approach, AERMOD incorporates current concepts about flow and dispersion in complex terrain. Where appropriate the plume is modeled as either impacting and/or following the terrain. This approach has been designed to be physically realistic and simple to implement while avoiding the need to distinguish among simple, intermediate and complex terrain, as required by other regulatory models.

AERMOD is a steady-state plume model that incorporates air dispersion based on planetary boundary layer turbulence structure and scaling concepts, including treatment of both surface and elevated sources, and both simple and complex terrain. In the stable boundary layer (SBL) AERMOD assumes the concentration distribution to be Gaussian in both the vertical and horizontal planes. In the convective boundary layer (CBL), the horizontal distribution is also assumed to be Gaussian, but the vertical distribution is described with a bi-Gaussian probability density function (pdf).

AERMOD approximates the physical processes occurring in the atmosphere that influence the dispersion and deposition of gaseous and particulate emissions from the BGCAPP treatment process stacks. The AERMOD air pollution dispersion model is an integrated system for modeling the dispersion of air pollutants using three program modules, which include:

1. a steady-state dispersion model designed for short-range (up to 50 kilometers) dispersion of air pollutant emissions from stationary industrial sources;
2. a meteorological data preprocessor (AERMET) that accepts surface meteorological data, upper air soundings, or data from on-site instrument towers, then calculates atmospheric parameters needed by the dispersion model; and
3. a terrain preprocessor (AERMAP) that provides a physical relationship between terrain features and the behavior of air pollution plumes.

AERMOD also includes PRIME (Plume Rise Model Enhancements) which is an algorithm for modeling the effects of downwash created by the pollution plume flowing over nearby buildings. Meteorological data from on-site towers for the years 2004 through 2008 were used for the air modeling. Separate vapor phase and particle phase air modeling runs were used for each of the five years of meteorological data. This section presents the data sources for the AERMOD inputs and the required air modeling parameters.

The model options for concentration, total deposition, dry deposition and wet deposition were selected based on the HHRAP recommendations. All other model options were set to the default.

3.2 Emission Source Characterization

The construction site for the proposed Blue Grass Chemical Agent-Destruction Pilot Plant (BGCAPP) is located within the Blue Grass Army Depot in Richmond, Kentucky and is shown on Figure 3-1. Figure 3-2 presents the general arrangement of the BGCAPP building and equipment in the vicinity of the proposed EDT site.

3.2.1 Stack Coordinates and Base Elevation

Reference points for emission sources from the facility plot plan were determined using USGS 7.5 minute quadrant maps. The Kentucky State Plane – South Zone grid utilized for facility mapping was converted to Universal Transverse Mercator (UTM), North American Datum 1927 (NAD27) using the program Google Earth – Earth Point Program. Using two reference points, the stack coordinates and locations of applicable buildings (i.e., for the calculation of downwash) were determined in UTM NAD27. Table 2-2 in the previous section presents the coordinates for all evaluated emission sources and other emissions source characteristics used as inputs to AERMOD.

3.2.2 Stack Height and Building Wake Effects

The emitting sources modeled at the BGAD facility include two SDC sources: the process stack as SDC1 and the vent as SDC2. Each of the other technologies evaluated are modeled as a single source. All sources are modeled at the same location for this screening analysis.

All four process stacks were given an assumed stack height of 50 ft, per Bechtel Parsons specifications. The building vent for the SDC alternative was modeled at 16 feet, as specified by the 2012 PCAPP MPHRA report. Due to the proximity of buildings in the vicinity of the process

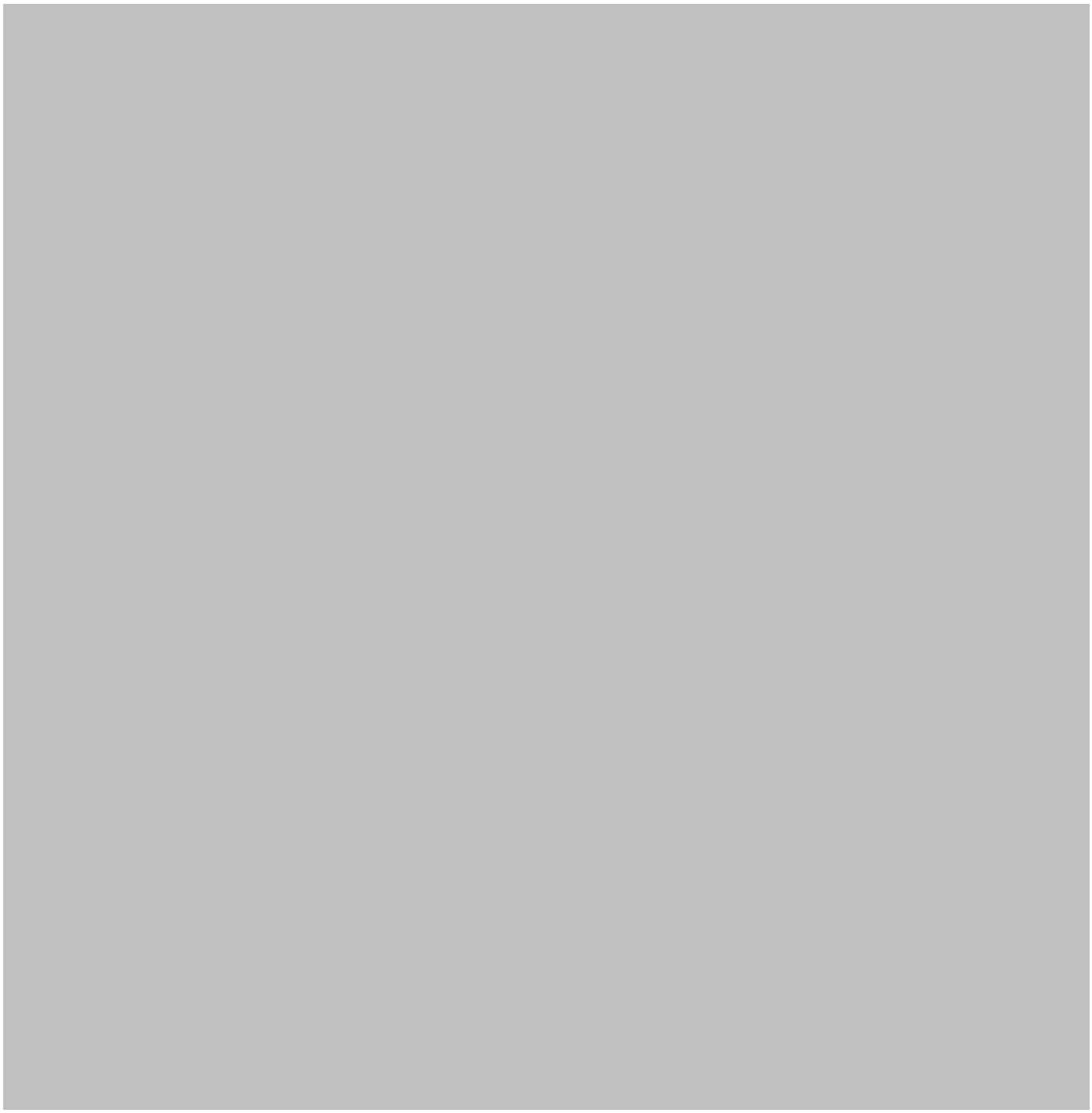

stacks, it was anticipated that building wake effects might influence the dispersion of stack gas from the evaluated stacks. As stated in Section 3.4.3 of the Final HHRAP, "significant decreases in concentrations and deposition rates will begin at stack heights at least 1.2 times the building height, and further decreases occur at 1.5 times building height, with continual decreases of up to 2.5 times building height (GEP stack height) where the building no longer influences stack gas."

Several of the plant buildings are "nearby", meaning these buildings may have meaningful wake effects. As described in Section 3.4.3 of the Final HHRAP, a building is "nearby" if the distance from the building to the stack is within five times the lesser of building height or crosswind width. Nearby buildings are shown in Figure 3-2.

The Building Profile Input Program (BPIP) was used to generate the AERMOD input data required to model building wake effects.

3.2.3 Stack Gas Temperature, Flowrate and Velocity

The stack gas temperature and velocities are design parameters obtained from the 2012 PCAPP MPHRA Report. The individual stack velocities for each of the four process stacks were based on the vendor supplied velocities. Stack diameter for each unit was calculated using the assumed stack height and vendor supplied stack velocity.

3.2.4 Modeled Emission Rate and Particle-Size Distribution

AERMOD air modeling was performed based on a unit emission rate of 1.0 g/s, instead of compound-specific emission rates. The unitized air modeling outputs based on a unit emission rate were multiplied by a compound-specific emission rate prior to use in the risk assessment.

The AERMOD model requires input of particle size distribution (PSD) and density data for completion of the particle phase and particle-bound phase modeling. Site-specific data for these parameters are not available. The EDT vendors indicated that stack gases will exhaust through a ventilation system including high efficiency particulate air (HEPA) filters that remove 99.7% of particles greater than 0.3 microns in size. Thus, a single particle category with a mean size of 0.3 microns is used. With a single particle size category, the mass fraction is set to 1 (100%), and only one model run is needed to represent both particle and particle-bound phases of the risk assessment. A particle density of 1 g/cm^3 is assumed for the sources as recommended in HHRAP.

3.3 Urban/Rural

The 3-kilometer area around BGAD was reviewed on the 7.5 minute topographic map and Google satellite maps to determine the correct land use type for the dispersion coefficients, Although there is some industrial/commercial land use around the facility, the predominant land uses in the 3-kilometer area are forest and agricultural land. Based on the Auer method as described in EPA's "Guideline on Air Quality Models", these land use type are considered rural. Thus, there is more than 50% rural, and the dispersion coefficients are set to rural.

3.4 Deposition Parameters

The new deposition algorithms in AERMOD require land use characteristics and some gas deposition resistance terms based on five seasonal categories, defined as:

Season Category 1: Midsummer with lush vegetation
Season Category 2: Autumn with non-harvested cropland
Season Category 3: Late autumn after frost and harvest, or winter with no snow
Season Category 4: Winter with continuous snow on ground
Season Category 5: Transitional spring with partial green coverage or short annuals

The seasonal categories used for modeling in this region are summarized in Table 3-1.

The nine land use categories required for deposition are entered for each of the 36 wind direction sectors (every 10 degrees). The EPA program AERSURFACE (08009) is used to calculate site-specific values used in the meteorological data processing. However, the output includes land use for the 12 sectors surrounding the facility. The 36 land use categories were estimated from the AERSURFACE land use percentages, and are shown in Table 3-2.

Figure 3-3 presents a best-fit curve developed by M. Jindal and D. Heinold[1] for the wet (liquid) scavenging rate coefficient versus particle size. From this curve, the liquid scavenging rate coefficient of 4.0E-5 (s^{-1}/mm-h^{-1}) was obtained for a one micron particle size. The scavenging rate coefficient for frozen precipitation (ice) was determined as one-third (1/3) of the liquid scavenging coefficient. This gives an ice scavenging coefficient of 1.3E-5(s^{-1}/mm-h^{-1}) for a one micron particle size.

The liquid scavenging coefficient for vapor phase compounds was determined based on a particle size of 0.1 μm, following the recommendations of the HHRAP Guidance. This gives the

[1] Jindal, M. and D. Heinold, 1991: Development of particulate scavenging coefficients to model wet deposition from industrial combustion sources. Paper 91-59.7, 84th Annual Meeting - Exhibition of AWMA, Vancouver, BC, June 16-21, 1991.

Table 3-1
Seasonal Categories

	Jan	Feb	Mar	Apr	May	Jun	Jul	Aug	Sep	Oct	Nov	Dec
Season	3	3	5	5	1	1	1	1	1	2	2	3

Table 3-2
Land Use Categories

Sector:		1	2	3	4	5	6	7	8	9	10	11	12
Range:		0-30º	30-60º	60-90º	90-120º	120-150º	150-180º	180-210º	210-240º	240-270º	270-300º	300-330º	330-360º
AERSURFACE Land Use	AERMOD Category	%	%	%	%	%	%	%	%	%	%	%	%
21 Low Intensity Residential	6 - suburban areas, forested	0%	0%	0%	0%	0%	13%	11%	11%	1%	0%	0%	2%
22 High Intensity Residential	1 - Urban land/ no vegetation	0%	0%	0%	0%	0%	0%	0%	0%	0%	0%	0%	0%
23 Commercial/ Industrial/Transp	1 - Urban land/ no vegetation	0%	0%	0%	0%	0%	0%	0%	1%	1%	0%	0%	1%
Total: 1 – Urban land/ no vegetation		0%	0%	0%	0%	0%	0%	0%	1%	1%	0%	0%	1%
41 Deciduous Forest	4 – forest	17%	26%	32%	44%	34%	39%	55%	50%	40%	13%	2%	12%
42 Evergreen Forest	4 – forest	1%	2%	3%	0%	0%	0%	0%	0%	0%	1%	1%	1%
43 Mixed Forest	4 – forest	14%	13%	20%	14%	17%	7%	4%	9%	10%	9%	2%	13%
Total: 4 – forest		32%	41%	**55%**	**58%**	**51%**	**46%**	**59%**	**59%**	**50%**	23%	5%	26%
81 Pasture/Hay	2 - Agricultural land	56%	49%	39%	36%	36%	8%	0%	0%	2%	62%	92%	56%
82 Row Crops	2 - Agricultural land	11%	10%	5%	5%	6%	4%	1%	0%	0%	4%	1%	6%
Total: 2 - Agricultural land		**67%**	**59%**	44%	41%	42%	12%	1%	0%	2%	**66%**	**93%**	**62%**
85 Urban/Recreational Grasses	5 - suburban areas, grassy	0%	0%	0%	0%	7%	30%	28%	29%	47%	10%	1%	9%
AERMOD Land Use:		2	2	4	4	4	4	4	4	4	2	2	2

Figure 3-3
Wet Scavenging Rate Coefficient as a Function of Particle Size
From Jindal and Heinold, 1991

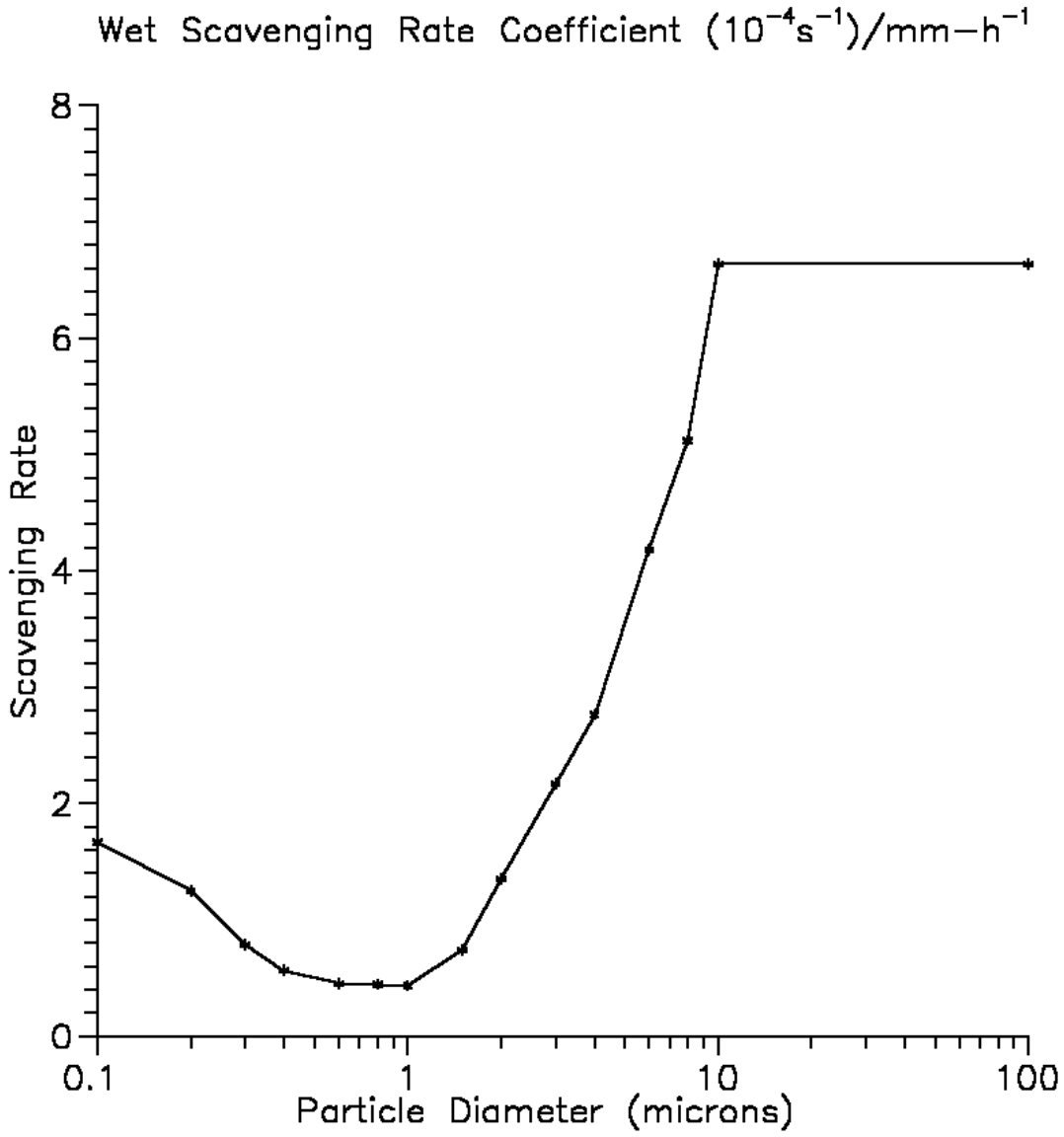

gas scavenging coefficients of 1.68E-04 (s^{-1}/mm-h^{-1}) and 0.56E-04 (s^{-1}/mm-h^{-1}) for liquid and ice, respectively.

3.5 Meteorological Data

AERMOD requires hourly meteorological data. Since the meteorological preprocessor, AERMET (version 06341), requires additional parameters such as pressure, relative humidity and precipitation, a complete on-site met data set is important for this analysis. Meteorological data is collected on-site at several towers and includes all the necessary measurements of required parameters. This analysis utilized data from the closest location, Tower 1, from which the data is provided in 15-minute records. This on-site meteorological station, designated as Tower 1, is just south of the EDT site. The current version of AERMET is unable to process the 15-minute data and correctly average it into hourly records. Thus, the data were averaged into hourly records following EPA guidance before processing.

The 5-year period of on-site surface data for 2004 through 2008 is combined with the twice daily upper air soundings in FSL format from Wilmington, OH (13841). Site-specific surface roughness, albedo and Bowen ratio parameters were calculated using the AERSURFACE program and used in AERMET to generate hourly data for the analysis. Since the AERMET program did not correctly include the onsite precipitation and relative humidity in the processed surface file, these parameters were added back into each year's file using MS Excel. The five years of processed data are combined into single, 5-year surface and profile meteorological files for input into AERMOD. The AERMET processing files are included on the attached CD-ROM.

3.6 Receptor Grid and Terrain

The receptor grid for this project was designed according to HHRAP guidance. The grid includes 100-meter spacing out to three kilometers from the facility centroid and 500-meter spacing out to 10 kilometers. Figure 3-4 indicates the entire grid developed, including the 100-meter dense receptor spacing and the 500-meter receptor spacing that extends to 10 kilometers from the centroid of the designated sources, excluding most on-site receptors. On-site receptors are shown at 100-meter spaces over the surface of Lake Vega, which was modeled for water-based exposure scenarios.

Terrain elevations were included in the modeling analysis for completeness. AERMAP (version 11103) is used to calculate the receptor elevations from 7.5-minute DEM data files. AERMAP also calculates the critical hill height for each receptor location.

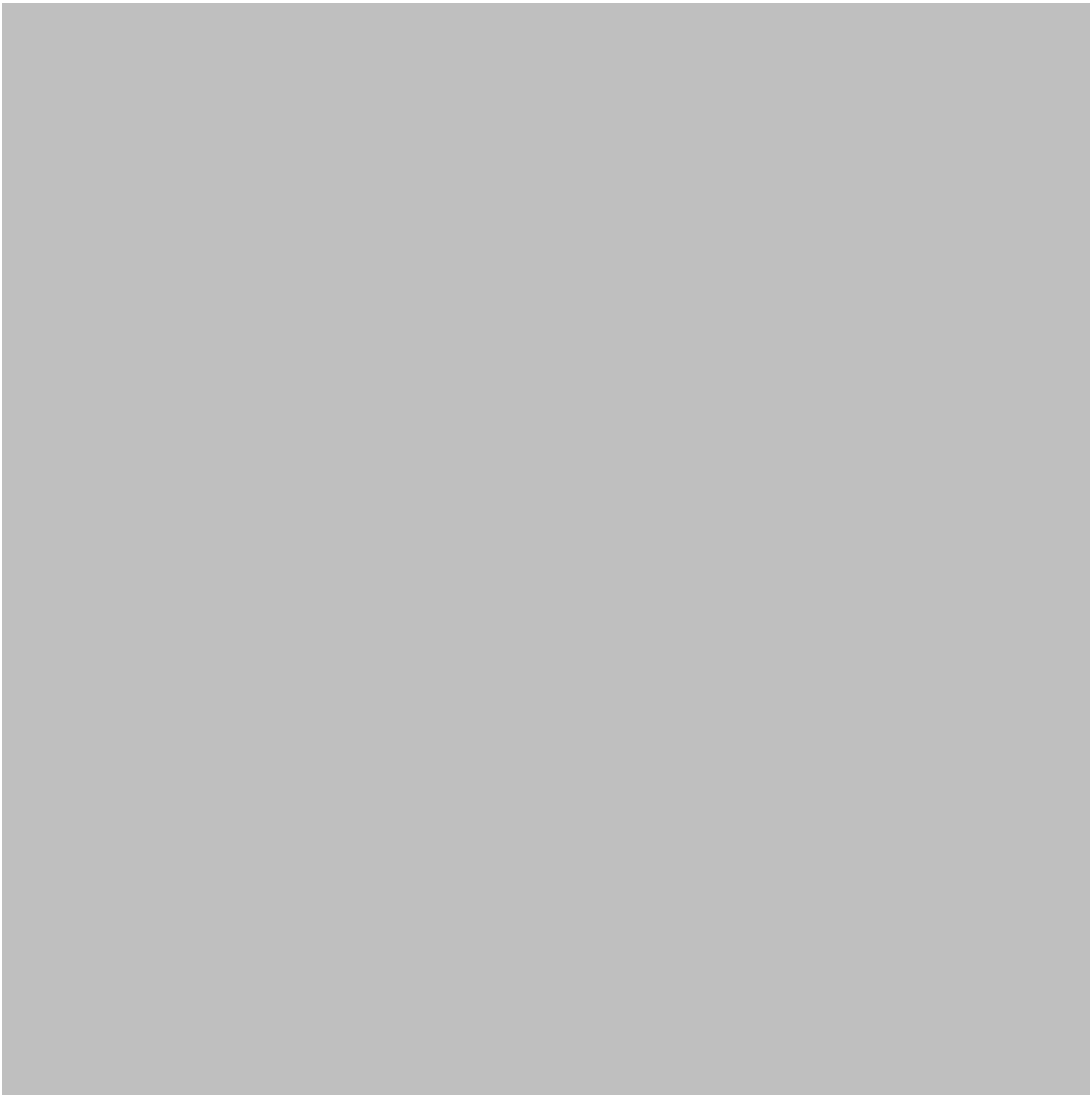

3.7 Chemical-Specific Parameters

For vapor phase runs, AERMOD requires the user to enter chemical-specific gas deposition parameters. These parameters include diffusivity in air (D_a), diffusivity in water (D_w), cuticular resistance to uptake by lipids for individual leaves (rcl) and Henry's Law constant (H). Thus, separate vapor model runs were required for each pollutant. Parameters for all Chemicals of Potential Concern (COPCs) were first derived from the appendices to the ANL report, as recommended in the AERMOD User's Guide. If parameters were not found in the ANL appendices, then the HHRAP chemical database is used as a secondary source of information. This database does not contain rcl values. Thus, a median value of all other found rcl values is used for the COPCs found in this database. If chemical-specific values were not found for a particular COPC in these two data sources, then values were either found via other chemical information sources or assumed based on the chemical's properties. A summary of the modeled chemical-specific parameters is provided in Table 3-3.

3.8 Modeling Results

The unitized modeling results presented in this section include concentration, dry deposition, wet deposition and total deposition for short-term (1-hour) and long-term (annual) exposures. There are a total of 87 model runs. Most modeled maximums occurred north of the facility, except for the SDC2 stack, which had most modeled maximums occurring at the Lake Vega water receptors on-site. The modeling run types and counts are summarized in Table 3-4.

Results of dispersion modeling runs for particle and particle bound phase modeling are summarized in Table 3-5. Tables 3-6 through 3-9 provide summary results for modeling runs for vapor phase modeling. Results provided include concentration maxima, as well as total, dry and wet deposition maxima.

Table 3-3
Chemical-Specific Values

COPC	CAS No.	SDC1	SDC2	TDC	DAV	EDS	Modeling ID	D_a (cm^2/s)	D_w (cm^2/s)	rcl (s/m)	H (Pa-m^3/mol)
1,1,1-trichloroethane	71-55-6	✓					TRICL111	7.80E-02	8.80E-06	6.64E+04	1.72E+03
1,1-dichloroethane	75-34-3	✓					DCHLOR11	7.40E-02	1.00E-05	1.37E+05	5.67E+02
1,1-dichloroethene	75-35-4	✓					DCHLRE11	9.28E-02	1.11E-05	5.78E+04	2.33E+03
1,2-dichloroethane	107-06-2	✓					DCHLOR12	1.00E-01	9.90E-06	1.66E+05	9.93E+01
1,2-dichloropropane	78-87-5	✓					DCHLPN12	7.82E-02	8.73E-06	1.79E+04	2.84E+02
1,3-butadiene	106-99-0	✓					BUTADIEN	1.01E-01	1.15E+00	1.14E+04	7.45E+03
1,4-dioxane	123-91-1			✓			14DIOXAN	9.50E-02	1.06E+00	6.52E+07	4.86E-01
2-butanone	78-93-3	✓		✓			MEK	9.18E-02	1.04E+00	3.88E+07	3.63E+00
acetone	67-64-1	✓		✓			ACETONE	1.20E-01	1.10E-05	7.60E+08	3.95E+00
benzene	71-43-2	✓		✓			BENZENE	8.96E-02	1.04E-05	2.51E+04	5.57E+02
benzoic acid	65-85-0	✓					BNZCACID	1.00E-03	7.97E-06	1.79E+04	2.91E-01
benzyl alcohol	100-51-6	✓					BNZLALCO	1.00E-03	1.00E-05	1.79E+04	3.41E-02
bis(2-ethylhexyl)-phthalate	117-81-7	✓		✓		✓	BIS2EPTH	3.72E-02	1.00E-01	2.79E+02	2.70E-02
bromodichloromethane	75-27-4	✓					BRDCLMTH	1.00E-03	1.00E-05	1.79E+04	1.62E+02
bromomethane	74-83-9	✓					BROMMETH	1.15E-01	1.44E+00	2.49E+05	6.33E+02
carbon disulfide	75-15-0	✓				✓	CRBDSULF	1.05E-01	1.29E+00	7.45E+02	1.75E+03
carbon tetrachloride	56-23-5	✓					CRBTCHLD	8.02E-02	9.37E-01	2.88E+04	2.94E+03
chlorobenzene	108-90-7	✓					CHLOBENZ	7.93E-02	9.17E-01	6.02E+03	3.67E+02
chloroform	67-66-3	✓					CHLOFORM	8.94E-02	1.07E-05	1.62E+05	3.81E+02
chloromethane	74-87-3	✓		✓			CHLOMETH	1.28E-01	1.47E+00	1.89E+06	9.74E+02
cis-1,3-dichloropropene	542-75-6	✓					DCHLPR13	6.26E-02	1.00E-05	1.79E+04	1.82E+03
dibromochloromethane	124-48-1	✓					DBCHLMTH	1.00E-03	1.00E-05	1.79E+04	7.93E+01
dichlorodifluoromethane	75-71-8	✓		✓			DCLFLMTH	1.00E-03	1.00E-05	1.79E+04	3.48E+04
di-n-butyl phthalate	84-74-2	✓		✓			DINBPHTH	4.64E-02	3.03E-01	6.46E+01	5.00E-02
di-n-octyl phthalate	117-84-0			✓			DINOPHTH	1.00E-03	1.00E-05	1.79E+04	6.79E+00
ethane	74-84-0			✓			ETHANE	1.96E-01	2.28E-05	1.79E+04	4.88E+04
ethanol	64-17-5					✓	ETHANOL	1.32E-01	8.30E+04	1.79E+04	5.07E-01

Table 3-3
Chemical-Specific Values (Continued)

COPC	CAS No.	SDC1	SDC2	TDC	DAV	EDS	Modeling ID	D_a (cm^2/s)	D_w (cm^2/s)	rcl (s/m)	H (Pa-m^3/mol)
ethylbenzene	100-41-4	✓					ETHLBENZ	7.37E-02	8.05E-01	1.65E+04	8.88E+02
Freon 113	76-13-1	✓					FREON113	5.80E-02	6.70E-06	1.79E+04	2.73E+03
H	505-60-2	✓	✓	✓	✓	✓	H	6.50E-02	7.50E-06	1.79E+04	3.04E+00
hexane	110-54-3	✓					HEXANE	7.66E-02	8.04E-01	2.73E+04	1.84E+05
methane	74-82-8			✓		✓	METHANE	2.99E-01	3.46E-05	1.79E+04	6.45E+04
methylene chloride	75-09-2	✓				✓	METHCHLO	1.03E-01	1.23E+00	9.07E+04	1.69E+02
naphthalene	91-20-3			✓			NAPHTHAL	7.03E-02	7.75E-01	3.65E+02	4.30E+01
styrene	100-42-5	✓					STYRENE	7.50E-02	8.38E-01	1.13E+04	3.06E+02
tetrachloroethene	127-18-4	✓					TRCHLETH	7.49E-02	8.61E-01	6.04E+03	2.69E+03
toluene	108-88-3	✓		✓		✓	TOLUENE	8.05E-02	9.10E-06	1.74E+04	6.80E+02
trans-1,3-dichloropropene	10061-02-6	✓					T13DCHLP	8.30E-02	9.63E-01	1.79E+04	8.82E+01
trichloroethene	79-01-6	✓					TRICLETH	8.23E-02	9.71E-01	1.88E+04	1.18E+03
trichlorofluoromethane	75-69-4	✓		✓			TCLFLMTH	8.70E-02	9.70E-06	1.79E+04	9.83E+03
vinyl chloride	75-01-4	✓				✓	VINLCHLR	1.10E-01	1.29E+00	7.35E+03	2.29E+03
xylenes	1330-20-7	✓			✓		XYLENES	7.37E-02	8.05E-01	1.83E+04	6.24E+02
1,2,3,4,6,7,8-HpCDD	35822-46-9			✓			HPCDD	4.66E-02	3.29E-01	5.97E-01	1.33E-01
1,2,3,4,6,7,8,9-OCDD	3268-87-9			✓			OCDD	4.52E-02	2.97E-06	4.94E+00	6.84E-01
2,3,7,8-TCDF	51207-31-9	✓					2378TCBF	5.27E-02	4.54E-06	9.67E+00	1.46E+00
1,2,3,4,6,7,8-HpCDF	67562-39-4			✓			123HPCBF	4.72E-02	3.41E-06	1.27E+01	1.43E+00
1,2,3,4,6,7,8,9-OCDF	39001-02-0			✓			OCDF	4.57E-02	3.08E-06	1.42E+00	1.91E-01
3,3',4,4'-TCB (PCB 77)	32598-13-3				✓		3344TCB	5.11E-02	4.38E-01	9.23E+01	1.04E+01
2,3',4,4',5-PeCB (PCB 118)	31508-00-6				✓		23445PCB	4.92E-02	3.99E-01	1.52E+02	1.27E+01
2,3,3',4,4'-PeCB (PCB 105)	32598-14-4				✓		23344PCB	4.92E-02	3.99E-01	1.38E+02	1.01E+01
ammonia	7664-41-7			✓			AMMONIA	1.98E-01	1.24E-05	1.79E+04	5.61E+05
aluminum	91728-14-2					✓	(no vapor phase)				
antimony	7440-36-0	✓		✓			(no vapor phase)				

Table 3-3
Chemical-Specific Values (Continued)

COPC	CAS No.	SDC1	SDC2	TDC	DAV	EDS	Modeling ID	D_a (cm^2/s)	D_w (cm^2/s)	rcl (s/m)	H (Pa-m^3/mol)
arsenic	7440-38-2	✓		✓		✓	(no vapor phase)				
barium	7440-39-3	✓		✓			(no vapor phase)				
beryllium	7440-41-7	✓		✓			(no vapor phase)				
boron	7440-42-8	✓					(no vapor phase)				
cadmium	7440-43-9	✓		✓		✓	(no vapor phase)				
chlorine	7782-50-5			✓			CL2	1.00E-03	1.00E-05	4.25E+25	1.20E-02
chromium (3+)	16065-83-1	✓		✓		✓	(no vapor phase)				
chromium (6+)	18540-29-9	✓		✓		✓	(no vapor phase)				
cobalt	7440-48-4	✓		✓			(no vapor phase)				
copper	7440-50-8	✓		✓	✓	✓	(no vapor phase)				
hydrogen chloride	7647-01-0			✓	✓		HCL	3.00E-01	1.00E-05	1.00E+05	1.00E-12
iron	7439-89-6			✓			(no vapor phase)				
lead	7439-92-1	✓		✓	✓	✓	(no vapor phase)				
manganese	7439-96-5	✓					(no vapor phase)				
mercuric chloride	7487-94-7	✓		✓	✓	✓	MERCCHLR	4.53E-02	5.25E-06	1.79E+04	7.19E-05
methyl mercury	22967-92-6	✓		✓	✓	✓	(no vapor phase)				
elemental mercury	7439-97-6	✓		✓	✓	✓	MERCURY	1.09E-02	3.01E-05	1.00E+05	1.50E+02
nickel	7440-02-0	✓		✓			(no vapor phase)				
phosphorus	7723-14-0	✓					(no vapor phase)				
selenium	7782-49-2	✓		✓			(no vapor phase)				
silver	7440-22-4	✓		✓		✓	(no vapor phase)				
tin	7440-31-5	✓					(no vapor phase)				
vanadium	7440-62-2			✓			(no vapor phase)				
zinc	7440-66-6	✓		✓			(no vapor phase)				

Table 3-4
Modeling Run Types and Counts

Source	Phase Type	Model Run Count
SDC1	Vapor	39
	Particle/Particle-Bound	1
SDC2	Vapor	1
	Particle/Particle-Bound	1
TDC	Vapor	24
	Particle/Particle-Bound	1
DAVINCH	Vapor	8
	Particle/Particle-Bound	1
EDS	Vapor	10
	Particle/Particle-Bound	1

Table 3-5
Particle/Particle-Bound Phase Modeling Maxima Summary

	Units	SDC1	SDC2	TDC	DAVINCH	EDS
Particle Phase Annual Concentration (Cyp)	µg-s/g-m^3	9.18E-01	2.94E+00	2.49E-01	1.24E+00	1.08E-01
Particle Phase Annual Total Deposition (Dytp)	s/m^2-yr	3.80E-03	1.12E-02	1.19E-03	4.71E-03	7.90E-04
Particle Phase Annual Dry Deposition (Dydp)	s/m^2-yr	3.80E-03	1.12E-02	1.18E-03	4.70E-03	7.90E-04
Particle Phase Annual Wet Deposition (Dywp)	s/m^2-yr	1.00E-05	1.00E-05	1.00E-05	1.00E-05	1.00E-05
Particle Phase Hourly Concentration (Chp)	µg-s/g-m^3	2.28E+02	7.47E+02	9.54E+01	2.20E+02	1.30E+02

Table 3-6
Vapor Phase Modeling Maxima Summary – Concentration

COPC	CAS	Chemical Grouping	AERMOD	Unitized Modeled Maximum Concentration (µg/m^3/g/s)									
			MODEL ID	SDC1		SDC2		TDC		DAVINCH		EDS	
				1-hour	Annual	1-hour	Annual	1-hour	Annual	1-hour	Annual	1-hour	Annual
1,1,1-trichloroethane	71-55-6	Organic	TRICL111	228.35	0.93								
1,1-dichloroethane	75-34-3	Organic	DCHLOR11	228.36	0.93								
1,1-dichloroethene	75-35-4	Organic	DCHLRE11	228.35	0.93								
1,2-dichloroethane	107-06-2	Organic	DCHLOR12	228.35	0.93								
1,2-dichloropropane	78-87-5	Organic	DCHLPN12	228.33	0.93								
1,3-butadiene	106-99-0	Organic	BUTADIEN	228.32	0.93								
1,4-dioxane	123-91-1	Organic	14DIOXAN					95.42	0.25				
2-butanone	78-93-3	Organic	MEK	228.27	0.93			95.49	0.25				
acetone	67-64-1	Organic	ACETONE	228.28	0.93			95.49	0.25			132.91	0.11
benzene	71-43-2	Organic	BENZENE	228.34	0.93			95.50	0.25				
benzoic acid	65-85-0	Organic	BNZCACID	228.12	0.92								
benzyl alcohol	100-51-6	Organic	BNZLALCO	228.05	0.92								
bis(2-ethylhexyl)-phthalate	117-81-7	Organic	BIS2EPTH	226.90	0.89			95.29	0.24			127.19	0.11
bromodichloromethane	75-27-4	Organic	BRDCLMTH	228.34	0.93								
bromomethane	74-83-9	Organic	BROMMETH	228.36	0.93								
carbon disulfide	75-15-0	Organic	CRBDSULF	227.84	0.92							131.30	0.11
carbon tetrachloride	56-23-5	Organic	CRBTCHLD	228.34	0.93								
chlorobenzene	108-90-7	Organic	CHLOBENZ	228.28	0.93								

Table 3-6
Vapor Phase Modeling Maxima Summary – Concentration (Continued)

COPC	CAS	Chemical Grouping	AERMOD MODEL ID	Unitized Modeled Maximum Concentration (µg/m^3/g/s)									
				SDC1		SDC2		TDC		DAVINCH		EDS	
				1-hour	Annual	1-hour	Annual	1-hour	Annual	1-hour	Annual	1-hour	Annual
cis-1,3-dichloropropene	542-75-6	Organic	DCHLPR13	228.33	0.93								
dibromochloromethane	124-48-1	Organic	DBCHLMTH	228.34	0.93								
dichlorodifluoromethane	75-71-8	Organic	DCLFLMTH	228.34	0.93			95.50	0.25				
di-n-butyl phthalate	84-74-2	Organic	DINBPHTH	226.75	0.88			95.27	0.24				
di-n-octyl phthalate	117-84-0	Organic	DINOPHTH					95.49	0.25				
ethane	74-84-0	Organic	ETHANE					95.50	0.25				
ethanol	64-17-5	Organic	ETHANOL									131.41	0.11
ethylbenzene	100-41-4	Organic	ETHLBENZ	228.33	0.93								
Freon 113	76-13-1	Organic	FREON113	228.33	0.93								
H	505-60-2	Organic	H	228.23	0.93	766.15	3.02	95.48	0.25	226.50	1.26	132.76	0.11
hexane	110-54-3	Organic	HEXANE	228.35	0.93								
methane	74-82-8	Organic	METHANE					95.50	0.25			133.11	0.11
methylene chloride	75-09-2	Organic	METHCHLO	228.35	0.93							133.18	0.11
naphthalene	91-20-3	Organic	NAPHTHAL					95.36	0.25				
styrene	100-42-5	Organic	STYRENE	228.32	0.93								
tetrachloroethene	127-18-4	Organic	TRCHLETH	228.28	0.93								
toluene	108-88-3	Organic	TOLUENE	228.33	0.93			95.50	0.25			133.10	0.11
trans-1,3-dichloropropene	10061-02-6	Organic	T13DCHLP	228.33	0.93								

Table 3-6
Vapor Phase Modeling Maxima Summary – Concentration (Continued)

COPC	CAS	Chemical Grouping	AERMOD	Unitized Modeled Maximum Concentration (µg/m3/g/s)									
				SDC1		SDC2		TDC		DAVINCH		EDS	
			MODEL ID	1-hour	Annual	1-hour	Annual	1-hour	Annual	1-hour	Annual	1-hour	Annual
vinyl chloride	75-01-4	Organic	VINLCHLR	228.29	0.93					226.45	1.26	132.97	0.11
xylenes	1330-20-7	Organic	XYLENES	228.33	0.93					226.60	1.26		
1,2,3,4,6,7,8-HpCDD	35822-46-9	PCDDs, PCDFs, PCBs	HPCDD					95.24	0.24				
1,2,3,4,6,7,8,9-OCDD	3268-87-9	PCDDs, PCDFs, PCBs	OCDD					95.25	0.24				
2,3,7,8-TCDF	51207-31-9	PCDDs, PCDFs, PCBs	2378TCBF	226.51	0.86								
1,2,3,4,6,7,8-HpCDF	67562-39-4	PCDDs, PCDFs, PCBs	123HPCBF					95.25	0.24				
1,2,3,4,6,7,8,9-OCDF	39001-02-0	PCDDs, PCDFs, PCBs	OCDF					95.25	0.24				
3,3',4,4'-TCB (PCB 77)	32598-13-3	PCDDs, PCDFs, PCBs	3344TCB							215.64	1.21		
2,3',4,4',5-PeCB (PCB 118)	31508-00-6	PCDDs, PCDFs, PCBs	23445PCB							218.68	1.22		
2,3,3',4,4'-PeCB (PCB 105)	32598-14-4	PCDDs, PCDFs, PCBs	23344PCB							218.13	1.22		
ammonia	7664-41-7	Inorganic	AMMONIA					95.50	0.25				
chlorine	7782-50-5	Inorganic	CL2					95.46	0.25				
hydrogen chloride	7647-01-0	Inorganic	HCL					95.15	0.22	201.31	1.07		
mercuric chloride	7487-94-7	Inorganic	MERCCHLR	226.52	0.85			95.24	0.24	206.06	1.14	125.41	0.10
elemental mercury	7439-97-6	Inorganic	MERCURY	228.36	0.93			95.50	0.25	226.67	1.26	133.20	0.11

Table 3-7
Vapor Phase Modeling Maxima Summary - Total Deposition

COPC	CAS	Chemical Grouping	AERMOD MODEL ID	Unitized Modeled Maximum Total Deposition (s/m^2-yr)									
				SDC1		SDC2		TDC		DAVINCH		EDS	
				1-hour	Annual	1-hour	Annual	1-hour	Annual	1-hour	Annual	1-hour	Annual
1,1,1-trichloroethane	71-55-6	Organic	TRICL111	0	4.00E-05								
1,1-dichloroethane	75-34-3	Organic	DCHLOR11	0	4.00E-05								
1,1-dichloroethene	75-35-4	Organic	DCHLRE11	0	5.00E-05								
1,2-dichloroethane	107-06-2	Organic	DCHLOR12	1.00E-05	5.00E-05								
1,2-dichloropropane	78-87-5	Organic	DCHLPN12	0	1.10E-04								
1,3-butadiene	106-99-0	Organic	BUTADIEN	0	1.50E-04								
1,4-dioxane	123-91-1	Organic	14DIOXAN					6.00E-05	5.40E-04				
2-butanone	78-93-3	Organic	MEK	1.00E-05	3.10E-04			1.00E-05	1.00E-04				
acetone	67-64-1	Organic	ACETONE	1.00E-05	3.00E-04			1.00E-05	9.00E-05			1.00E-05	6.00E-05
benzene	71-43-2	Organic	BENZENE	0	9.00E-05			0	3.00E-05				
benzoic acid	65-85-0	Organic	BNZCACID	4.00E-05	1.63E-03								
benzyl alcohol	100-51-6	Organic	BNZLALCO	6.00E-05	3.39E-03								
bis(2-ethylhexyl)-phthalate	117-81-7	Organic	BIS2EPTH	2.70E-04	1.12E-02			1.40E-04	3.71E-03			1.10E-04	2.43E-03
bromodichloromethane	75-27-4	Organic	BRDCLMTH	0	9.00E-05								
bromomethane	74-83-9	Organic	BROMMETH	0	4.00E-05								
carbon disulfide	75-15-0	Organic	CRBDSULF	5.00E-05	1.85E-03							3.00E-05	2.30E-04
carbon tetrachloride	56-23-5	Organic	CRBTCHLD	0	7.00E-05								
chlorobenzene	108-90-7	Organic	CHLOBENZ	1.00E-05	2.80E-04								
chloroform	67-66-3	Organic	CHLOFORM	0	4.00E-05								

Table 3-7
Vapor Phase Modeling Maxima Summary - Total Deposition (Continued)

COPC	CAS	Chemical Grouping	AERMOD	Unitized Modeled Maximum Total Deposition (s/m^2-yr)									
			MODEL ID	SDC1		SDC2		TDC		DAVINCH		EDS	
				1-hour	Annual	1-hour	Annual	1-hour	Annual	1-hour	Annual	1-hour	Annual
chloromethane	74-87-3	Organic	CHLOMETH	0	3.00E-05			0	2.00E-05				
cis-1,3-dichloropropene	542-75-6	Organic	DCHLPR13	0	1.00E-04								
dibromochloromethane	124-48-1	Organic	DBCHLMTH	0	1.00E-04								
dichlorodifluoromethane	75-71-8	Organic	DCLFLMTH	0	9.00E-05			0	2.00E-05				
di-n-butyl phthalate	84-74-2	Organic	DINBPHTH	3.10E-04	1.30E-02			1.70E-04	4.98E-03				
di-n-octyl phthalate	117-84-0	Organic	DINOPHTH					0	6.00E-05				
ethane	74-84-0	Organic	ETHANE					0	3.00E-05				
ethanol	64-17-5	Organic	ETHANOL									4.00E-05	2.90E-04
ethylbenzene	100-41-4	Organic	ETHLBENZ	0	1.10E-04								
Freon 113	76-13-1	Organic	FREON113	0	1.00E-04								
H	505-60-2	Organic	H	1.00E-05	4.40E-04	4.00E-05	1.17E-03	1.00E-05	1.30E-04	1.00E-05	5.30E-04	1.00E-05	7.00E-05
hexane	110-54-3	Organic	HEXANE	0	6.00E-05								
methane	74-82-8	Organic	METHANE					0	3.00E-05			0	1.00E-05
methylene chloride	75-09-2	Organic	METHCHLO	1.00E-05	5.00E-05							0	2.00E-05
naphthalene	91-20-3	Organic	NAPHTHAL					4.00E-05	9.50E-04				
styrene	100-42-5	Organic	STYRENE	0	1.60E-04								
tetrachloroethene	127-18-4	Organic	TRCHLETH	1.00E-05	2.70E-04								

Table 3-7
Vapor Phase Modeling Maxima Summary - Total Deposition (Continued)

COPC	CAS	Chemical Grouping	AERMOD MODEL ID	Unitized Modeled Maximum Total Deposition (s/m^2-yr)									
				SDC1		SDC2		TDC		DAVINCH		EDS	
				1-hour	Annual	1-hour	Annual	1-hour	Annual	1-hour	Annual	1-hour	Annual
toluene	108-88-3	Organic	TOLUENE	0	1.10E-04			0	3.00E-05			0	2.00E-05
trans-1,3-dichloropropene	10061-02-6	Organic	T13DCHLP	0	1.20E-04								
trichloroethene	79-01-6	Organic	TRICLETH	0	1.00E-04								
trichlorofluoromethane	75-69-4	Organic	TCLFLMTH	0	1.00E-04			0	3.00E-05				
vinyl chloride	75-01-4	Organic	VINLCHLR	1.00E-05	2.30E-04					1.00E-05	2.80E-04	0	3.00E-05
xylenes	1330-20-7	Organic	XYLENES	0	1.10E-04					0	1.30E-04		
1,2,3,4,6,7,8-HpCDD	35822-46-9	PCDDs, PCDFs, PCBs	HPCDD					2.60E-04	1.85E-02				
1,2,3,4,6,7,8,9-OCDD	3268-87-9	PCDDs, PCDFs, PCBs	OCDD					2.50E-04	1.69E-02				
2,3,7,8-TCDF	51207-31-9	PCDDs, PCDFs, PCBs	2378TCBF	3.80E-04	2.05E-02								
1,2,3,4,6,7,8-HpCDF	67562-39-4	PCDDs, PCDFs, PCBs	123HPCBF					2.10E-04	1.06E-02				
1,2,3,4,6,7,8,9-OCDF	39001-02-0	PCDDs, PCDFs, PCBs	OCDF					2.60E-04	1.82E-02				
3,3',4,4'-TCB (PCB 77)	32598-13-3	PCDDs, PCDFs, PCBs	3344TCB							2.30E-04	1.04E-02		
2,3',4,4',5-PeCB (PCB 118)	31508-00-6	PCDDs, PCDFs, PCBs	23445PCB							1.80E-04	7.66E-03		
2,3,3',4,4'-PeCB (PCB 105)	32598-14-4	PCDDs, PCDFs, PCBs	23344PCB							1.80E-04	8.15E-03		
ammonia	7664-41-7	Inorganic	AMMONIA					0	2.00E-05				
chlorine	7782-50-5	Inorganic	CL2					4.00E-05	1.90E-03				
hydrogen chloride	7647-01-0	Inorganic	HCL					9.20E-04	8.17E-02	1.45E-03	9.23E-02		
mercuric chloride	7487-94-7	Inorganic	MERCCHLR	5.70E-04	3.45E-02			2.80E-04	2.85E-02	5.50E-04	3.85E-02	3.70E-04	2.18E-02
elemental mercury	7439-97-6	Inorganic	MERCURY	0	3.00E-05			0	1.00E-05	0	3.00E-05	0	1.00E-05

Table 3-8
Vapor Phase Modeling Maxima Summary - Dry Deposition

COPC	CAS	Chemical Grouping	AERMOD MODEL ID	Unitized Modeled Maximum Dry Deposition (s/m^2-yr)									
				SDC1		SDC2		TDC		DAVINCH		EDS	
				1-hour	Annual	1-hour	Annual	1-hour	Annual	1-hour	Annual	1-hour	Annual
1,1,1-trichloroethane	71-55-6	Organic	TRICL111	0	4.00E-05								
1,1-dichloroethane	75-34-3	Organic	DCHLOR11	0	3.00E-05								
1,1-dichloroethene	75-35-4	Organic	DCHLRE11	0	5.00E-05								
1,2-dichloroethane	107-06-2	Organic	DCHLOR12	1.00E-05	5.00E-05								
1,2-dichloropropane	78-87-5	Organic	DCHLPN12	0	1.10E-04								
1,3-butadiene	106-99-0	Organic	BUTADIEN	0	1.50E-04								
1,4-dioxane	123-91-1	Organic	14DIOXAN					2.00E-05	4.60E-04				
2-butanone	78-93-3	Organic	MEK	1.00E-05	3.00E-04			1.00E-05	8.00E-05				
acetone	67-64-1	Organic	ACETONE	1.00E-05	2.90E-04			1.00E-05	8.00E-05			1.00E-05	5.00E-05
benzene	71-43-2	Organic	BENZENE	0	9.00E-05			0	3.00E-05				
benzoic acid	65-85-0	Organic	BNZCACID	4.00E-05	1.61E-03								
benzyl alcohol	100-51-6	Organic	BNZLALCO	6.00E-05	3.37E-03								
bis(2-ethylhexyl)-phthalate	117-81-7	Organic	BIS2EPTH	2.30E-04	1.06E-02			1.00E-04	3.24E-03			1.00E-04	1.59E-03
bromodichloromethane	75-27-4	Organic	BRDCLMTH	0	9.00E-05								
bromomethane	74-83-9	Organic	BROMMETH	0	4.00E-05								
carbon disulfide	75-15-0	Organic	CRBDSULF	5.00E-05	1.85E-03							3.00E-05	2.30E-04
carbon tetrachloride	56-23-5	Organic	CRBTCHLD	0	7.00E-05								
chlorobenzene	108-90-7	Organic	CHLOBENZ	1.00E-05	2.80E-04								
chloroform	67-66-3	Organic	CHLOFORM	0	4.00E-05								

Table 3-8
Vapor Phase Modeling Maxima Summary - Dry Deposition (Continued)

COPC	CAS	Chemical Grouping	AERMOD	Unitized Modeled Maximum Dry Deposition (s/m^2-yr)									
			MODEL ID	SDC1		SDC2		TDC		DAVINCH		EDS	
				1-hour	Annual	1-hour	Annual	1-hour	Annual	1-hour	Annual	1-hour	Annual
chloromethane	74-87-3	Organic	CHLOMETH	0	3.00E-05			0	2.00E-05				
cis-1,3-dichloropropene	542-75-6	Organic	DCHLPR13	0	1.00E-04								
dibromochloromethane	124-48-1	Organic	DBCHLMTH	0	1.00E-04								
dichlorodifluoromethane	75-71-8	Organic	DCLFLMTH	0	9.00E-05			0	2.00E-05				
di-n-butyl phthalate	84-74-2	Organic	DINBPHTH	2.60E-04	1.23E-02			1.10E-04	4.03E-03				
di-n-octyl phthalate	117-84-0	Organic	DINOPHTH					0	6.00E-05				
ethane	74-84-0	Organic	ETHANE					0	3.00E-05				
ethanol	64-17-5	Organic	ETHANOL									3.00E-05	1.50E-04
ethylbenzene	100-41-4	Organic	ETHLBENZ	0	1.10E-04								
Freon 113	76-13-1	Organic	FREON113	0	1.00E-04								
H	505-60-2	Organic	H	1.00E-05	4.20E-04	4.00E-05	1.13E-03	1.00E-05	1.10E-04	1.00E-05	5.10E-04	1.00E-05	4.00E-05
hexane	110-54-3	Organic	HEXANE	0	6.00E-05								
methane	74-82-8	Organic	METHANE					0	3.00E-05			0	1.00E-05
methylene chloride	75-09-2	Organic	METHCHLO	1.00E-05	5.00E-05							0	2.00E-05
naphthalene	91-20-3	Organic	NAPHTHAL					4.00E-05	9.50E-04				
styrene	100-42-5	Organic	STYRENE	0	1.60E-04								
tetrachloroethene	127-18-4	Organic	TRCHLETH	1.00E-05	2.70E-04								
toluene	108-88-3	Organic	TOLUENE	0	1.10E-04			0	3.00E-05			0	2.00E-05

Table 3-8
Vapor Phase Modeling Maxima Summary - Dry Deposition (Continued)

COPC	CAS	Chemical Grouping	AERMOD MODEL ID	Unitized Modeled Maximum Dry Deposition (s/m^2-yr)									
				SDC1		SDC2		TDC		DAVINCH		EDS	
				1-hour	Annual	1-hour	Annual	1-hour	Annual	1-hour	Annual	1-hour	Annual
trans-1,3-dichloropropene	10061-02-6	Organic	T13DCHLP	0	1.20E-04								
trichloroethene	79-01-6	Organic	TRICLETH	0	1.00E-04								
trichlorofluoromethane	75-69-4	Organic	TCLFLMTH	0	1.00E-04			0	3.00E-05				
vinyl chloride	75-01-4	Organic	VINLCHLR	1.00E-05	2.30E-04					1.00E-05	2.80E-04	0	3.00E-05
xylenes	1330-20-7	Organic	XYLENES	0	1.10E-04					0	1.30E-04		
1,2,3,4,6,7,8-HpCDD	35822-46-9	PCDDs, PCDFs, PCBs	HPCDD					2.60E-04	1.79E-02				
1,2,3,4,6,7,8,9-OCDD	3268-87-9	PCDDs, PCDFs, PCBs	OCDD					2.50E-04	1.67E-02				
2,3,7,8-TCDF	51207-31-9	PCDDs, PCDFs, PCBs	2378TCBF	3.80E-04	2.05E-02								
1,2,3,4,6,7,8-HpCDF	67562-39-4	PCDDs, PCDFs, PCBs	123HPCBF					2.10E-04	1.06E-02				
1,2,3,4,6,7,8,9-OCDF	39001-02-0	PCDDs, PCDFs, PCBs	OCDF					2.60E-04	1.78E-02				
3,3',4,4'-TCB (PCB 77)	32598-13-3	PCDDs, PCDFs, PCBs	3344TCB							2.30E-04	1.04E-02		
2,3',4,4',5-PeCB (PCB 118)	31508-00-6	PCDDs, PCDFs, PCBs	23445PCB							1.80E-04	7.65E-03		
2,3,3',4,4'-PeCB (PCB 105)	32598-14-4	PCDDs, PCDFs, PCBs	23344PCB							1.80E-04	8.14E-03		
ammonia	7664-41-7	Inorganic	AMMONIA					0	2.00E-05				
chlorine	7782-50-5	Inorganic	CL2					4.00E-05	1.86E-03				
hydrogen chloride	7647-01-0	Inorganic	HCL					9.20E-04	7.68E-02	1.45E-03	8.76E-02		
mercuric chloride	7487-94-7	Inorganic	MERCCHLR	5.10E-04	3.34E-02			2.80E-04	2.74E-02	5.00E-04	3.74E-02	3.70E-04	2.07E-02
elemental mercury	7439-97-6	Inorganic	MERCURY	0	3.00E-05			0	1.00E-05	0	3.00E-05	0	1.00E-05

Table 3-9
Vapor Phase Modeling Maxima Summary - Wet Deposition

COPC	CAS	Chemical Grouping	AERMOD	Unitized Modeled Maximum Wet Deposition (s/m^2-yr)									
			MODEL ID	SDC1		SDC2		TDC		DAVINCH		EDS	
				1-hour	Annual	1-hour	Annual	1-hour	Annual	1-hour	Annual	1-hour	Annual
1,1,1-trichloroethane	71-55-6	Organic	TRICL111	0	0								
1,1-dichloroethane	75-34-3	Organic	DCHLOR11	0	0								
1,1-dichloroethene	75-35-4	Organic	DCHLRE11	0	0								
1,2-dichloroethane	107-06-2	Organic	DCHLOR12	0	0								
1,2-dichloropropane	78-87-5	Organic	DCHLPN12	0	0								
1,3-butadiene	106-99-0	Organic	BUTADIEN	0	0								
1,4-dioxane	123-91-1	Organic	14DIOXAN					6.00E-05	1.70E-04				
2-butanone	78-93-3	Organic	MEK	1.00E-05	3.00E-05			1.00E-05	2.00E-05				
acetone	67-64-1	Organic	ACETONE	1.00E-05	2.00E-05			1.00E-05	2.00E-05			1.00E-05	2.00E-05
benzene	71-43-2	Organic	BENZENE	0	0			0	0				
benzoic acid	65-85-0	Organic	BNZCACID	1.00E-05	3.00E-05								
benzyl alcohol	100-51-6	Organic	BNZLALCO	1.00E-05	3.00E-05								
bis(2-ethylhexyl)-phthalate	117-81-7	Organic	BIS2EPTH	1.90E-04	1.03E-03			1.40E-04	9.40E-04			1.10E-04	8.60E-04
bromodichloromethane	75-27-4	Organic	BRDCLMTH	0	0								
bromomethane	74-83-9	Organic	BROMMETH	0	0								
carbon disulfide	75-15-0	Organic	CRBDSULF	0	0							0	0
carbon tetrachloride	56-23-5	Organic	CRBTCHLD	0	0								
chlorobenzene	108-90-7	Organic	CHLOBENZ	0	0								
chloroform	67-66-3	Organic	CHLOFORM	0	0								

Table 3-9
Vapor Phase Modeling Maxima Summary - Wet Deposition (Continued)

COPC	CAS	Chemical Grouping	AERMOD	Unitized Modeled Maximum Wet Deposition (s/m^2-yr)									
			MODEL ID	SDC1		SDC2		TDC		DAVINCH		EDS	
				1-hour	Annual	1-hour	Annual	1-hour	Annual	1-hour	Annual	1-hour	Annual
chloromethane	74-87-3	Organic	CHLOMETH	0	0			0	0				
cis-1,3-dichloropropene	542-75-6	Organic	DCHLPR13	0	0								
dibromochloromethane	124-48-1	Organic	DBCHLMTH	0	0								
dichlorodifluoromethane	75-71-8	Organic	DCLFLMTH	0	0			0	0				
di-n-butyl phthalate	84-74-2	Organic	DINBPHTH	2.30E-04	1.04E-03			1.70E-04	9.50E-04				
di-n-octyl phthalate	117-84-0	Organic	DINOPHTH					0	1.00E-05				
ethane	74-84-0	Organic	ETHANE					0	0				
ethanol	64-17-5	Organic	ETHANOL									4.00E-05	1.50E-04
ethylbenzene	100-41-4	Organic	ETHLBENZ	0	0								
Freon 113	76-13-1	Organic	FREON113	0	0								
H	505-60-2	Organic	H	1.00E-05	3.00E-05	1.00E-05	4.00E-05	1.00E-05	3.00E-05	1.00E-05	3.00E-05	1.00E-05	3.00E-05
hexane	110-54-3	Organic	HEXANE	0	0								
methane	74-82-8	Organic	METHANE					0	0			0	0
methylene chloride	75-09-2	Organic	METHCHLO	0	0							0	0
naphthalene	91-20-3	Organic	NAPHTHAL					0	0				
styrene	100-42-5	Organic	STYRENE	0	0								
tetrachloroethene	127-18-4	Organic	TRCHLETH	0	0								
toluene	108-88-3	Organic	TOLUENE	0	0			0	0			0	0
trans-1,3-dichloropropene	10061-02-6	Organic	T13DCHLP	0	0								

Table 3-9
Vapor Phase Modeling Maxima Summary - Wet Deposition (Continued)

COPC	CAS	Chemical Grouping	AERMOD	Unitized Modeled Maximum Wet Deposition (s/m^2-yr)									
			MODEL ID	SDC1		SDC2		TDC		DAVINCH		EDS	
				1-hour	Annual	1-hour	Annual	1-hour	Annual	1-hour	Annual	1-hour	Annual
trichloroethene	79-01-6	Organic	TRICLETH	0	0								
trichlorofluoromethane	75-69-4	Organic	TCLFLMTH	0	0			0	0				
vinyl chloride	75-01-4	Organic	VINLCHLR	0	0					0	0	0	0
xylenes	1330-20-7	Organic	XYLENES	0	0					0	0		
1,2,3,4,6,7,8-HpCDD	35822-46-9	PCDDs, PCDFs, PCBs	HPCDD					1.70E-04	5.80E-04				
1,2,3,4,6,7,8,9-OCDD	3268-87-9	PCDDs, PCDFs, PCBs	OCDD					4.00E-05	1.20E-04				
2,3,7,8-TCDF	51207-31-9	PCDDs, PCDFs, PCBs	2378TCBF	3.00E-05	6.00E-05								
1,2,3,4,6,7,8-HpCDF	67562-39-4	PCDDs, PCDFs, PCBs	123HPCBF					2.00E-05	6.00E-05				
1,2,3,4,6,7,8,9-OCDF	39001-02-0	PCDDs, PCDFs, PCBs	OCDF					1.50E-04	4.20E-04				
3,3',4,4'-TCB (PCB 77)	32598-13-3	PCDDs, PCDFs, PCBs	3344TCB							0	1.00E-05		
2,3',4,4',5-PeCB (PCB 118)	31508-00-6	PCDDs, PCDFs, PCBs	23445PCB							0	1.00E-05		
2,3,3',4,4'-PeCB (PCB 105)	32598-14-4	PCDDs, PCDFs, PCBs	23344PCB							0	1.00E-05		
ammonia	7664-41-7	Inorganic	AMMONIA					0	0				
chlorine	7782-50-5	Inorganic	CL2					0	3.00E-05				
hydrogen chloride	7647-01-0	Inorganic	HCL					7.00E-04	5.85E-03	1.10E-03	6.78E-03		
mercuric chloride	7487-94-7	Inorganic	MERCCHLR	2.30E-04	1.38E-03			1.70E-04	1.27E-03	2.50E-04	1.44E-03	1.30E-04	1.20E-03
elemental mercury	7439-97-6	Inorganic	MERCURY	0	0			0	0	0	0	0	0

4.0 EXPOSURE SCENARIO IDENTIFICATION

Individual human receptors evaluated in the risk assessment have different potential direct and indirect exposure to COPCs emitted from the EDT facility, depending on age, activities, and location. This section identifies these receptors and defines the pathways by which the receptors are exposed to the COPCs. The selected pathways and exposure scenarios described are the same as previously used for the BGCAPP risk assessment. Likewise, location was eliminated as a parameter used to define exposure scenarios by utilizing the maximum off-site impact (based on air dispersion modeling) of all receptors in the evaluated off-property assessment area. This technique effectively maximizes the estimated exposure to every individual regardless of the actual location of the resident/farmer/fisher. The use of this very conservative assumption is expected to significantly overestimate potential risk assessment impacts, but was considered appropriate for this screening level assessment. The only exception to the application of this assumption was at Lake Vega where the estimated deposition of COPCs was averaged over the entire area of the water body.

Each exposure scenario defines a particular combination of exposure pathways and the parameter values used to characterize risk and hazards. The differences between age and activity were were accounted for when defining the applicable exposure scenarios. Table 4-1 presents the chronic and acute exposure pathways and exposure scenarios considered in this risk assessment. Acute exposure was evaluated for residents only. The drinking water and fish consumption pathways require site-specific data regarding water bodies and their watersheds. For this risk assessment, the source of drinking water is the Upper Kentucky River and the source for fish is Lake Vega. Default values and methodologies are identical to the previous BGCAPP risk assessment to allow comparisons between the EDT risk assessment and the BGCAPP risk assessment.

4.1 Use of HHRAP Recommended Default Model Parameters

Although the model does use some site specific data, HHRAP defaults are selected for physical constants, most agricultural parameters, soil loss parameters and many water body parameters, as listed below. Site specific data was obtained for evapotranspiration, irrigation, runoff, watershed area, impervious watershed area, depth of water bodies, rainfall factor, river velocity, volumetric flow of water bodies, and average wind speed.

Physical constants and parameters for which default values were used:

- Soil bulk density
- Drag coefficient

Table 4-1
Selected Exposure Scenarios and Associated Exposure Pathways

Exposure Pathways	Exposure Scenarios						
	Farmer	**Farmer Child**	**Adult Resident**	**Child Resident**	**Fisher**	**Fisher Child**	**Acute Risk[a]**
Inhalation of Vapors and Particulates	X	X	X	X	X	X	X
Incidental Ingestion of Soil	X	X	X	X	X	X	
Ingestion of Homegrown Produce	X	X	X	X	X	X	
Ingestion of Homegrown Beef	X	X					
Ingestion of Milk from Homegrown Cows	X	X					
Ingestion of Homegrown Chicken	X	X					
Ingestion of Eggs from Homegrown Chickens	X	X					
Ingestion of Homegrown Pork	X	X					
Ingestion of Fish					X	X	
Ingestion of Breast Milk[b]	X		X		X		

Notes:

[a] The acute risk scenario evaluates short-term 1-hour maximum pollutant air concentrations based on hourly emission rates.

[b] PCDD/PCDF estimated concentrations in the three exposure scenarios indicated are utilized to model exposure to infants. Infant exposure to PCDD/PCDF via the ingestion of their mother's breast milk is evaluated as an additional exposure pathway, separately from the recommended exposure scenario.

- Von Karman constant
- Plant surface loss coefficient
- Viscosity of air and water
- Density of air, water and soil
- Universal gas constant
- Model start time (zero)
- Ambient temperature
- Duration of deposition period
- Soil water content
- Soil mixing zone depth interception fraction, growth period for edible plant fraction, and yield, each for aboveground plants, silage and forage
- Empirical correction factor for forage and silage
- Metabolism factor for BEHP
- Daily consumption each of forage, silage, grain and soil by beef cows, dairy cows, pigs, chickens for meat and chickens for eggs
- Universal soil loss equation parameters: empirical slope coefficient, cover management factor, erodibility factor, length slope factor and practice factor
- Bed sediment concentration
- Depth of upper benthic sediment layer
- Fish lipid content
- Viscous sub layer thickness
- Fraction of organic carbon in bottom sediment
- Temperature correction factor
- Bed sediment porosity
- Total suspended solids
- Water temperature
- Half life of dioxin in adults
- Fraction of ingested dioxin and dioxin-like PCBs that is stored in fat
- Fraction of mother's weight that is fat
- Fraction of mother's breast milk that is fat
- Fraction of ingested COPC that is absorbed
- Infant body weight
- Consumption rate of breast milk
- For each exposure scenario (adult and child, resident, farmer and fisher):
    - Body weight
    - Consumption rate of soil, above ground produce, protected produce, below ground produce, beef, milk, pork, egg, and chicken

- Fraction of each food raised in contaminated area
- Exposure duration, exposure frequency, exposure time
- Averaging time for cancer effects

4.2 Special On-site and Off-site Water Body Considerations

Water bodies identified as relevant include Lake Vega Reservoir which is a dammed section of Muddy Creek about 2 km southwest of the EDT facility, and the lower Kentucky River which most closely approaches the source near [redacted]. The modeled pollutant concentration at the receptor grid point on the lower Kentucky River that was nearest to the source was utilized as the concentration for the entire water body. Receptors were placed at 100 meter increments on the surface of Lake Vega and the results from air dispersion modeling for all receptors were averaged to yield the concentration utilized in the risk model for Lake Vega impacts.

4.3 Exposure Period Considerations

Based on guidance recommendations, the assumed duration of exposure to the modeled concentrations of COPCs vary based on age and the exposure pathway. Additionally, the operating life of the facility being evaluated must be considered in risk calculations. The adult chronic exposure scenarios were based on the assumption that an adult is located at the location of maximum impact continuously for the entire exposure duration. For adult farmers, the direct exposure to emissions by inhalation occurs for the anticipated operating life of the facility, but indirect exposure from ingestion of home-grown produce and livestock continues for 40 years. Direct exposure periods are the same for each exposure scenario, although the operating life of each of the EDT technology alternatives is slightly different (from 28 to 39 weeks as shown previously in Table 2.1). Indirect exposure for adult residents continues for 30 years, and this value is assumed to be 25 years for adult fishers. Each exposure scenario receives indirect exposure through ingestion of contaminated homegrown food and direct contact with soil and water.

Chronic exposure scenarios for all children in the assessment area are based on the assumption that a child resides at the location of maximum impact from the second through the sixth year of life. As with the adult exposure scenarios, direct exposure through inhalation of EDT emissions occurs for the operating life of the specific EDT technology alternative. During this time, the child also receives indirect exposure to the same pathways as described for adults and contaminated homegrown food. The same considerations for exposure apply to infants for the first year of life. Infants in the assessment area are assumed to be exposed to COPCs through breast milk, inhalation pathway and consumption of home-grown food.

5.0 TOXICITY DATA

Chemical toxicity data utilized for this MPHHRA was largely based on information in the Battelle Memorial Institute's March 2012 MPHRA Report for Explosive Destruction Technology Alternatives at the Pueblo Chemical Depot. Additional toxicity data not included in the PCAPP MPHRA database were compiled based on EPA's preferred hierarchy for these types of applications.

Reference Dose values (RfDs) and Cancer Slope Factors (CSFs) were obtained from information sources based on the hierarchy of human health toxicity values described in the Office of Solid Waste and Emergency Response (OSWER) Directive 9285.7-53 (USEPA, 2003).

The recommended toxicity value hierarchy for chronic toxicity factors begins with USEPA's Integrated Risk Information System (IRIS), followed by USEPA's provisional peer reviewed toxicity values. Also recommended if data are not available from those sources, are the California EPA - Office of Environmental Health Hazard Assessment (OEHHA), Toxicity Criteria Database ATSDR Minimal Risk Levels (MRLs), and USEPA RSLs. EPA recommends OEHHA as the preferred source for Acute Inhalation Exposure Criteria.

Table 5-1 presents the toxicity database, and associated references, compiled for this MPHHRA obtained from the various sources based on the hierarchy presented above.

Table 5-1
MPHHRA Toxicity Factors

COPC	CAS	Chemical Grouping	AIEC	TEF	URFi	CSFo	RfC	RfDo	AIEC	TEF	URFi	CSFo	RfC	RfDo
			mg/m^3	--	$1/(\mu g/m^3)$	1/(mg/kg/day)	mg/m^3	mg/kg/day	Data source	Data source	Data source	Data source	Data source	Data source
1,1,1-trichloroethane	71-55-6	Organic	68				5.0E+00	2.00E+00	Cal/EPA				IRIS	IRIS
1,1-dichloroethane	75-34-3	Organic	3,000		1.63E-06	5.70E-03	4.9E-01	1.00E-01	TEEL-1		Cal/EPA	Cal/EPA	Reg 9 PRG	Reg 9 PRG
1,1-dichloroethene	75-35-4	Organic	250				2.0E-01	5.00E-02	TEEL-1				IRIS	IRIS
1,2-dichloroethane	107-06-2	Organic	202		2.60E-05	9.10E-02	4.9E-03	2.00E-02	AIHA		IRIS	IRIS	Reg 9 PRG	Reg 9 PRG
1,2-dichloropropane	78-87-5	Organic	1,000		1.94E-05	6.80E-02	4.0E-03	9.00E-02	TEEL-1		Reg 9 PRG	Reg 9 PRG	IRIS	ATSDR
1,3-butadiene	106-99-0	Organic	1,482		3.00E-05	3.40E+00	2.0E-03		AEGL-1		IRIS	RSL	IRIS	
1,4-dioxane	123-91-1	Organic	3		7.71E-06	1.10E-02	3.0E+00	1.00E-01	Cal/EPA		RSL	IRIS	Cal/EPA	ATSDR
2-butanone	78-93-3	Organic	13				5.0E+00	6.00E-01	Cal/EPA				IRIS	IRIS
acetone	67-64-1	Organic	475				3.2E+00	9.00E-01	AEGL-1				Reg 9 PRG	IRIS
benzene	71-43-2	Organic	1.3		7.71E-06	5.50E-02	3.0E-02	4.00E-03	Cal/EPA		IRIS	IRIS	IRIS	IRIS
benzoic acid	65-85-0	Organic	12.5					4.00E+00	TEEL-1					IRIS
benzyl alcohol	100-51-6	Organic	600					1.00E-01	TEEL-1					RSL
bis(2-ethylhexyl)-phthalate	117-81-7	Organic	10		2.40E-06	1.40E-02		2.00E-02	TEEL-1		RSL	IRIS		IRIS
bromodichloromethane	75-27-4	Organic	4		3.71E-05	6.20E-02		2.00E-02	TEEL-1		RSL	IRIS		IRIS
bromomethane	74-83-9	Organic	100				5.0E-03	1.40E-03	TEEL-1				IRIS	IRIS
carbon disulfide	75-15-0	Organic	6.2				7.0E-01	1.00E-01	Cal/EPA				IRIS	IRIS
carbon tetrachloride	56-23-5	Organic	1.9		6.00E-06	7.00E-02	1.0E-01	4.00E-03	Cal/EPA		IRIS	IRIS	IRIS	IRIS
chlorobenzene	108-90-7	Organic	46				5.0E-02	2.00E-02	AEGL-1				RSL	IRIS

Table 5-1
MPHHRA Toxicity Factors (Continued)

COPC	CAS	Chemical Grouping	AIEC	TEF	URFi	CSFo	RfC	RfDo	AIEC	TEF	URFi	CSFo	RfC	RfDo
			mg/m^3	--	$1/(\mu g/m^3)$	1/ (mg/kg/ day)	mg/m^3	mg/kg/day	Data source	Data source	Data source	Data source	Data source	Data source
chloroform	67-66-3	Organic	0.15		2.30E-05	3.1E-02	4.90E-02	1.00E-02	Cal/EPA		IRIS	Cal/EPA	Reg 9 PRG	IRIS
chloromethane	74-87-3	Organic	200				9.00E-02	2.60E-02	TEEL-1				IRIS	Reg 9 PRG
cis-1,3-dichloropropene	542-75-6	Organic	0.6		4.00E-06	1.0E-01	2.00E-02	3.00E-02	TEEL-1		IRIS	IRIS	IRIS	IRIS
dibromochloromethane	124-48-1	Organic	125		2.69E-05	8.4E-02		2.00E-02	TEEL-1		Cal/EPA	IRIS		IRIS
dichlorodifluoromethane	75-71-8	Organic	15,000				1.00E-01	2.00E-01	TEEL-1				RSL	IRIS
di-n-butyl phthalate	84-74-2	Organic	10					1.00E-01	TEEL-1					IRIS
di-n-octyl phthalate	117-84-0	Organic												
ethane	74-84-0	Organic												
ethanol	64-17-5	Organic												
ethylbenzene	100-41-4	Organic	143		2.53E-05	1.1E-02	1.00E+00	1.00E-01	AEGL-1		Cal/EPA	Cal/EPA	IRIS	IRIS
Freon 113	76-13-1	Organic	10,000				3.00E+01	3.00E+01	TEEL-1				RSL	IRIS
H	505-60-2	Organic	0.065		4.00E-03	7.7E+00	2.10E-05	7.00E-06	AEGL-1		CHPPM	CHPPM	CHPPM	CHPPM
hexane	110-54-3	Organic	1500				7.00E-01	1.10E+01	TEEL-1				IRIS	Reg 9 PRG
methane	74-82-8	Organic												
methylene chloride	75-09-2	Organic	14		1.00E-08	7.5E-03	6.00E-01	6.00E-02	Cal/EPA		IRIS	IRIS	IRIS	IRIS
naphthalene	91-20-3	Organic			3.43E-05		3.01E-03	2.00E-02					IRIS	IRIS
styrene	100-42-5	Organic	21				1.00E+00	2.00E-01	Cal/EPA				IRIS	IRIS

Table 5-1
MPHHRA Toxicity Factors (Continued)

COPC	CAS	Chemical Grouping	AIEC	TEF	URFi	CSFo	RfC	RfDo	AIEC	TEF	URFi	CSFo	RfC	RfDo
			mg/m^3	--	$1/(\mu g/m^3)$	1/ (mg/kg/day)	mg/m^3	mg/kg/day	Data source	Data source	Data source	Data source	Data source	Data source
tetrachloroethene	127-18-4	Organic	20		2.60E-07	5.40E-01	4.0E-02	1.00E-02	Cal/EPA		IRIS	Reg 9 PRG	IRIS	IRIS
toluene	108-88-3	Organic	37				5.0E+00	8.00E-02	Cal/EPA				IRIS	IRIS
trans-1,3-dichloropropene	10061-02-6	Organic	75		4.00E-06	1.00E-01	1.1E-01	3.00E-02	TEEL-1		IRIS	IRIS	ATSDR	IRIS
trichloroethene	79-01-6	Organic	698		1.14E-04	4.00E-01	2.0E-03	3.00E-04	AEGL-1		IRIS	Reg 9 PRG	IRIS	Reg 9 PRG
trichlorofluoromethane	75-69-4	Organic	5000				7.0E-01	3.00E-01	TEEL-1				RSL	IRIS
vinyl chloride	75-01-4	Organic	180		4.29E-06	7.20E-01	1.0E-01	3.00E-03	Cal/EPA		IRIS	IRIS	IRIS	IRIS
xylenes	1330-20-7	Organic	22				1.0E-01	2.00E-01	Cal/EPA				IRIS	IRIS
1,2,3,4,6,7,8-HpCDD	35822-46-9	PCDDs, PCDFs, PCBs	0.5	0.01					TEEL-1	TEQ Basis				
1,2,3,4,6,7,8,9-OCDD	3268-87-9	PCDDs, PCDFs, PCBs	0.01	0.0003					TEEL-1					
2,3,7,8-TCDF	51207-31-9	PCDDs, PCDFs, PCBs	0.0006	0.1					TEEL-1					
1,2,3,4,6,7,8-HpCDF	67562-39-4	PCDDs, PCDFs, PCBs	0.15	0.01					TEEL-1					
1,2,3,4,6,7,8,9-OCDF	39001-02-0	PCDDs, PCDFs, PCBs	0.0075	0.0003					TEEL-1					
3,3',4,4'-TCB (PCB 77)	32598-13-3	PCDDs, PCDFs, PCBs	0.125	0.0001			4.0E-04	1.00E-05	TEEL-1	TEQ Basis			RSL	RSL
2,3',4,4',5-PeCB (PCB 118)	31508-00-6	PCDDs, PCDFs, PCBs	0.125	0.00003			1.3E-03	3.30E-05	TEEL-1	TEQ Basis			RSL	RSL

Table 5-1
MPHHRA Toxicity Factors (Continued)

COPC	CAS	Chemical Grouping	AIEC	TEF	URFi	CSFo	RfC	RfDo	AIEC	TEF	URFi	CSFo	RfC	RfDo
			mg/m^3	--	$1/(\mu g/m^3)$	1/ (mg/kg/day)	mg/m^3	mg/kg/day	Data source	Data source	Data source	Data source	Data source	Data source
2,3,3',4,4'-PeCB (PCB 105)	32598-14-4	PCDDs, PCDFs, PCBs	0.125	3.0E-05			1.3E-03	3.30E-05	TEEL-1	TEQ Basis			RSL	RSL
ammonia	7664-41-7	Inorganic	3.2				1.0E-01		Cal/EPA				IRIS	
aluminum	91728-14-2	Inorganic	3				5.0E-03	1.00E+00	TEEL-1				RSL	ATSDR
antimony	7440-36-0	Inorganic	1.5					4.00E-04	TEEL-1					IRIS
arsenic	7440-38-2	Inorganic	0.0002		4.30E-03	1.50E+00		3.00E-04	Cal/EPA		IRIS	IRIS		IRIS
barium	7440-39-3	Inorganic	1.5				5.0E-04	2.00E-01	TEEL-1				RSL	IRIS
beryllium	7440-41-7	Inorganic	0.0035		2.40E-03		2.0E-05	2.00E-03	TEEL-1		IRIS		IRIS	IRIS
boron	7440-42-8	Inorganic	7.5				2.1E-02	2.00E-01	TEEL-1				Reg 9 PRG	IRIS
cadmium	7440-43-9	Inorganic	0.1		1.80E-03		1.0E-05	5.00E-04	AEGL-1		IRIS		ATSDR	IRIS
chlorine	7782-50-5	Inorganic	0.21				1.5E-04	1.00E-01	Cal/EPA				ATSDR	IRIS
chromium (3+)	16065-83-1	Inorganic	1					1.50E+00	TEEL-1					IRIS
chromium (6+)	18540-29-9	Inorganic			1.20E-02	5.00E-01	1.0E-04	3.00E-03			IRIS	RSL	IRIS	IRIS
cobalt	7440-48-4	Inorganic	0.3				2.4E-04	3.00E-03	TEEL-1				ATSDR	RSL
copper	7440-50-8	Inorganic	0.1					4.00E-02	Cal/EPA					RSL
hydrogen chloride	7647-01-0	Inorganic	2.1				2.0E-02		Cal/EPA				IRIS	
iron	7439-89-6	Inorganic	6					7.00E-01	TEEL-1					RSL

Table 5-1
MPHHRA Toxicity Factors (Continued)

COPC	CAS	Chemical Grouping	AIEC	TEF	URFi	CSFo	RfC	RfDo	AIEC	TEF	URFi	CSFo	RfC	RfDo
			mg/m^3	--	1/ ($\mu g/m^3$)	1/ (mg/kg/day)	mg/m^3	mg/kg/day	Data source	Data source	Data source	Data source	Data source	Data source
lead	7439-92-1	Inorganic	0.15		1.20E-05	8.50E-03			TEEL-1		Cal/EPA	Cal/EPA		
manganese	7439-96-5	Inorganic	3				5.00E-05	1.40E-01	TEEL-1				IRIS	IRIS
mercuric chloride	7487-94-7	Inorganic	4				3.00E-05	3.00E-04	TEEL-1				RSL	IRIS
methyl mercury	22967-92-6	Inorganic	0.0322					1.00E-04	TEEL-1					IRIS
elemental mercury	7439-97-6	Inorganic	0.0006				3.00E-04		Cal/EPA				IRIS	
nickel	7440-02-0	Inorganic	0.006		2.40E-04		9.00E-05	2.00E-02	Cal/EPA		IRIS		ATSDR	IRIS
phosphorus	7723-14-0	Inorganic	3.7						AEGL-1					
selenium	7782-49-2	Inorganic	0.6				2.00E-02	5.00E-03	TEEL-1				RSL	IRIS
silver	7440-22-4	Inorganic	0.3					5.00E-03	TEEL-1					IRIS
tin	7440-31-5	Inorganic	6						TEEL-1					
vanadium	7440-62-2	Inorganic	1.5				1.04E-04	5.00E-03	TEEL-1				ATSDR	RSL
zinc	7440-66-6	Inorganic	3					3.00E-01	TEEL-1					IRIS

Source notes: IRIS - USEPA's Integrated Risk Information System
AEGL - 1 - Acute Exposure Guideline Level 1
Cal/EPA - California EPA, OEHHA Toxicity Criteria Database
Reg 9 PRG - USEPA Region IX PRGs 2004 Table
RSL - USEPA Risk Screening Level Tables
TEQ Basis - Cancer Risk from PCDD, PCDF's and coplanar PCB's evaluated on the basis of toxic equivalence to 2,3,7,8-TCDD, per "Recommended Toxicity Equivalence Factors for HHRA of 2,3,7,8-TCDD like Compounds".
CHPPM - "Derivation of Health-Based Environmental Screening Levels for Chemical Warfare Agents -A Technical Evaluation." March 1999, US Army Center for Health Promotion and Preventative Medicine.
TEEL -1 - United States Department of Energy (DOE) Temporary Emergency Exposure Limits.
ATSDR - The ATSDR MRLs

6.0 RISK RESULTS

The risk characterization for the EDT was performed in accordance with USEPA risk assessment guidelines. Air dispersion modeling results are combined with toxicity information, emissions estimates, and other site-specific information to generate risk and hazard values for individuals exposed to EDT emissions. The risk and hazard values for individuals can then be compared to acceptable benchmarks for human health. The magnitude and types of risks depend on the nature, duration, and frequency of exposure to the selected chemicals emitted from the process and the characteristics of the exposed human receptors.

This section presents the results of the EDT MPHHRA. Summary results of the EDT MPHHRA are presented in Section 6.4 below in a series of tables organized by EDT. Detailed MPHHRA model output also is provided in Appendices 1 – 4 for EDS, TDC, DAVINCH, and SDC, respectively. Health effects results are presented in the following order: carcinogenic risk, non-carcinogenic hazard, and acute hazard. A summary of the top five COPCs contributing the majority of the EDT risk and hazard follows these health effects results.

Quantitative estimates of carcinogenic risks and non-carcinogenic hazards were calculated for direct inhalation exposures and indirect exposures to EDT emissions. Estimated total carcinogenic risk was compared to an acceptable level of 1 case in one hundred thousand (1×10^{-5}).

The typical benchmark for evaluation of the estimated long-term, non-carcinogenic hazard from airborne unit emissions is 1.0. US EPA Region 6 recommended that a hazard index benchmark of 0.25 be utilized to take background concentrations of COPCs into consideration in areas where significant industrial activity takes place. Although the BGAD location does not represent an area of significant industrial activity, hazard indices based on emissions from the EDT facility were compared against this very conservative benchmark [i.e., total non-carcinogenic hazard was compared to an acceptable hazard index (HI) of 0.25 (or total cumulative dose is less than 25 percent of the RfD)]. In addition, an acute hazard analysis was performed and the results were compared to an acceptable HI of 1.0.

Cumulative BGCAPP impacts (i.e., risks of EDT and BGCAPP main plant operating simultaneously) were also addressed by adding the results of the EDT MPHHRA to the results of the previous SLHHRA results and compared to the stated acceptable levels. These cumulative results are tabulated and presented below in Section 6.6.

Additionally, utilizing the HHRAP Guidance for evaluation of dioxin/furan compounds, a nursing infant's estimated daily intake of 2, 3, 7, 8-TCDD TEQ was also calculated based on its mother's exposure, for each adult chronic exposure scenario for each EDT alternative for which there were estimated dioxin/furan emissions. A summary of these exposure estimates is provided in Table 6-1. Based on the HHRAP Guidance, an average daily intake of 1 pg TEQ/kg-day or less for adults, and 60 pg TEQ/kg-day or less for nursing infants do not pose a significant concern for adverse health-effects. Since the highest average daily intake of 2, 3, 7, 8-TCDD estimated in this screening assessment was 0.0002 pg TEQ/kg-day versus an allowable intake of 1 pg TEQ/kg-day, COPC emissions of dioxin-like PCBs, PCDDs, and PCDFs from any of the EDT alternatives are unlikely to cause adverse non-carcinogenic health-effects.

6.1 Characterization of Carcinogenic Health Effects

Carcinogenic risk is estimated as the probability of an individual developing cancer over a lifetime as a result of exposure to specified emissions. For this risk assessment, carcinogenic risk is estimated as an incremental probability of fatal cancer from exposure to emissions from each EDT alternative for specific potential carcinogens (i.e., excess individual lifetime cancer risk). Carcinogenic risk is estimated from both direct and indirect exposures as described in Section 4.0 of this report. The toxicity factors related to carcinogens presented in Table 5-1 were used to develop this estimate.

6.2 Characterization of Non-Carcinogenic Health Effects

For COPCs with non-carcinogenic effects, the potential for non-carcinogenic toxic effects in an individual is evaluated by comparing the estimated exposure level over a specified time period with the appropriate non-cancer reference dose, also presented in Table 5-1 as RfD. The non-carcinogenic hazard quotient (HQ) is a unitless value that considers a threshold exposure limit that below which health effects are not expected to occur. Sensitive populations are considered in this benchmark. HQs represent a non-carcinogenic hazard associated with an individual COPC and a specific exposure pathway.

Both direct and indirect exposures are considered in the estimation of non-cancer health effects. HQs for direct exposures to COPCs are calculated by dividing the inhalation intake of a COPC by the inhalation reference dose (RfD) for that COPC. HQs for indirect exposures to COPCs are calculated similarly, and incorporate the averaging time for non-carcinogenic health effects.

A Hazard Index (HI) is generated by summing HQ's for all selected COPCs for a given receptor.

Table 6-1
Impacts from Dioxin-Like PCBs, PCDDs, and PCDFs

Exposure Scenario	Location	Benchmark pg TEQ/kg/day	I_teq pg TEQ/kg/day	I_bmilk pg TEQ/kg/day
TDC Alternative				
Adult Resident	Rmax	1	4.84E-08	1.4114E-06
Child Resident	Rmax	60	1.34E-07	
Fisher	Rmax	1	4.88E-08	1.4216E-06
Fisher Child	Rmax	60	1.35E-07	
Farmer	Fmax	1	9.83E-08	2.8662E-06
Farmer Child	Fmax	60	2.07E-07	
DAVINCH Alternative				
Adult Resident	Rmax	1	9.33E-12	2.72E-10
Child Resident	Rmax	60	2.60E-11	
Fisher	Rmax	1	1.26E-11	3.67E-10
Fisher Child	Rmax	60	2.83E-11	
Farmer	Fmax	1	3.88E-09	1.13E-07
Farmer Child	Fmax	60	5.56E-09	
SDC Alternative				
Adult Resident	Rmax	1	3.11E-08	9.07E-07
Child Resident	Rmax	60	8.67E-08	
Fisher	Rmax	1	4.31E-08	1.25E-06
Fisher Child	Rmax	60	9.51E-08	
Farmer	Fmax	1	6.61E-06	**1.93E-04**
Farmer Child	Fmax	60	9.48E-06	

6.3 Characterization of Acute Health Effects

Potential acute hazards associated with short-term emission release events were evaluated for each COPC. The acute HQ (HQA) represents the hazard associated with short-term direct exposure to each COPC in air during a short-term emission release event. HQAs for each COPC were summed to calculate the overall acute HI (HIA).

6.4 Results for Each EDT Technology

Overall risk and hazard results are provided with all pertinent assumptions, input constants, and conditions in Appendices 1-4. The tables included in the following sections provide summary information and clarification of results

6.4.1 EDS Results

Table 6-2 presents the total carcinogenic and non-carcinogenic risks estimated for each human receptor by pathway, including acute exposure. Table 6-3 identifies the COPC responsible for the maximum impact for each pathway for each exposure scenario.

6.4.2 TDC Results

Table 6-4 presents the total carcinogenic and non-carcinogenic risks estimated for each human receptor by pathway, including acute exposure. Table 6-5 identifies the COPC responsible for the maximum impact for each pathway for each exposure scenario.

6.4.3 DAVINCH Results

Table 6-6 presents the total carcinogenic and non-carcinogenic risks estimated for each human receptor by pathway, including acute exposure. Table 6-7 identifies the COPC responsible for the maximum impact for each pathway for each exposure scenario.

6.4.4 SDC Results

Table 6-8 presents the total carcinogenic and non-carcinogenic risks estimated for each human receptor by pathway, including acute exposure. Table 6-9 identifies the COPC responsible for the maximum impact for each pathway for each exposure scenario.

6.5 Summary and Cumulative EDT and BGCAPP Risk and Hazard Results

Table 6-10 provides a summary of the carcinogenic risks, non-carcinogenic hazards, and acute hazards, for all of the EDTs. This table includes the baseline results previously obtained when conducting the BGCAPP SLHHRA and compares the total impacts to acceptable levels. None of the EDT technologies is expected to result in impacts, individually or in addition to 2010

estimated BGCAPP impacts that exceed acceptable limits. In fact, the results of cumulative risk from both sources are well below threshold values.

The results for both cumulative non-carcinogenic and cumulative carcinogenic risk calculations are approximately one-tenth or less of the established, generally accepted and recommended (i.e., for areas of industrial activity) bench marks. The air modeling and risk calculations clearly indicate that unacceptable non-carcinogenic or carcinogenic health effects are not expected. This conclusion (i.e., adverse health effects are not expected due to BGCAPP and EDT emissions) is further strengthened by the use of very conservative assumptions which over-estimated the chronic and acute health hazards while also overestimating the cancer risks posed by BGCAPP and EDT air emissions. The results of this MPHHRA are summarized in the Table 6-11.

Table 6-2
Total Carcinogenic Risk and Non-carcinogenic Hazard – EDS Technology

Exposure Scenario	**Scenario Location**	**Cancer Risk (Benchmark = 1E-05)**			**Total Hazard Index (Benchmark = 0.25)**		
		Oral	Inhalation	Total	Oral	Inhalation	Total
Adult Resident	Rmax	1.94E-12	3.03E-10	3.05E-10	0.00000008	0.00000839	0.00000848
Child Resident	Rmax	8.65E-13	6.06E-11	6.15E-11	0.00000019	0.00000839	0.00000858
Fisher	Rmax	2.08E-12	3.03E-10	3.05E-10	0.00000009	0.00000839	0.00000848
Fisher Child	Rmax	8.86E-13	6.06E-11	6.15E-11	0.00000019	0.00000839	0.00000858
Farmer	Fmax	2.70E-12	4.04E-10	4.07E-10	0.00000009	0.00000839	0.00000848
Farmer Child	Fmax	8.92E-13	6.06E-11	6.15E-11	0.00000019	0.00000839	0.00000859
Acute Exposure	Amax	--	--	--	--	0.00001038	--

Table 6-3
Maximum Impact COPC Carcinogenic Risk and Non-carcinogenic Hazard – EDS Technology

Exposure Scenario	Exposure Pathway	Carcinogenic Risk		Non Carcinogenic Hazard	
		Max Cancer Risk	COPC	Max HQ	COPC
Adult Resident	inhalation	3.02E-10	H	8.38E-06	H
	oral	1.92E-12	H	8.33E-08	H
	soil	4.35E-19	H	1.88E-14	H
	produce	4.98E-16	H	2.16E-11	H
Child Resident	inhalation	6.03E-11	H	8.38E-06	H
	oral	8.60E-13	H	1.86E-07	H
	soil	8.13E-19	H	1.76E-13	H
	produce	2.43E-16	H	5.26E-11	H
Fisher	inhalation	3.02E-10	H	8.38E-06	H
	oral	2.07E-12	H	8.97E-08	H
	soil	4.35E-19	H	1.88E-14	H
	produce	4.98E-16	H	2.16E-11	H
	fish	1.47E-13	H	6.37E-09	H

Table 6-3
Maximum Impact COPC Carcinogenic Risk and Non-carcinogenic Hazard – EDS Technology (Continued)

Exposure Scenario	Exposure Pathway	Carcinogenic Risk		Non Carcinogenic Hazard	
		Max Cancer Risk	COPC	Max HQ	COPC
Fisher Child	inhalation	6.03E-11	H	8.38E-06	H
	oral	8.80E-13	H	1.91E-07	H
	soil	8.13E-19	H	1.76E-13	H
	produce	2.43E-16	H	5.26E-11	H
	fish	2.07E-14	H	4.49E-09	H
Farmer	inhalation	4.02E-10	H	8.38E-06	H
	oral	2.69E-12	H	8.73E-08	H
	soil	1.09E-20	H	1.88E-14	H
	produce	2.01E-15	H	8.78E-11	H
	beef	2.62E-14	H	8.53E-10	H
	milk	9.37E-14	H	3.05E-09	H
	pork	9.96E-16	H	3.27E-11	H
	egg	4.26E-21	H	7.38E-15	H
	chicken	6.57E-21	H	1.14E-14	H

Table 6-3
Maximum Impact COPC Carcinogenic Risk and Non-carcinogenic Hazard – EDS Technology (Continued)

Exposure Scenario	Exposure Pathway	Carcinogenic Risk		Non Carcinogenic Hazard	
		Max Cancer Risk	COPC	Max HQ	COPC
Farmer Child	inhalation	6.03E-11	H	8.38E-06	H
	oral	8.86E-13	H	1.92E-07	H
	soil	8.13E-19	H	1.76E-13	H
	produce	9.78E-16	H	2.12E-10	H
	beef	2.42E-15	H	5.24E-10	H
	milk	2.34E-14	H	5.06E-09	H
	pork	1.15E-16	H	2.50E-11	H
	egg	2.45E-20	H	5.31E-15	H
	chicken	3.58E-20	H	7.76E-15	H
Acute Exposure	inh	NA	NA	0.0000	Methane

Table 6-4
Total Carcinogenic Risk and Non-carcinogenic Hazard – DAVINCH Technology

Exposure Scenario	Scenario Location	Cancer Risk (Benchmark = 1E-05)			Total Hazard Index (Benchmark = 0.25)		
		Oral	Inhalation	Total	Oral	Inhalation	Total
Adult Resident	Rmax	4.80E-10	1.96E-08	2.01E-08	0.000021	0.000660	0.000681
Child Resident	Rmax	2.29E-10	3.93E-09	4.16E-09	0.000050	0.000660	0.000710
Fisher	Rmax	4.81E-10	1.96E-08	2.01E-08	0.000021	0.000660	0.000681
Fisher Child	Rmax	2.29E-10	3.93E-09	4.16E-09	0.000050	0.000660	0.000710
Farmer	Fmax	6.41E-09	2.62E-08	3.26E-08	0.000208	0.000660	0.000868
Farmer Child	Fmax	1.50E-09	3.93E-09	5.43E-09	0.000325	0.000660	0.000985
Acute Exposure	Amax	--	--	--	--	0.000246	--

Table 6-5
Maximum Impact COPC Carcinogenic Risk and Non-carcinogenic Hazard – DAVINCH Technology

Exposure Scenario	Exposure Pathway	Carcinogenic Risk		Non Carcinogenic Hazard	
		Max Cancer Risk	From COPC	Max HQ	From COPC
Adult Resident	inhalation	1.96E-08	H	5.45E-04	H
	oral	4.80E-10	H	2.08E-05	H
	soil	2.92E-16	H	1.26E-11	H
	produce	4.19E-10	H	1.81E-05	H
Child Resident	inhalation	3.93E-09	H	5.45E-04	H
	oral	2.29E-10	H	4.96E-05	H
	soil	5.45E-16	H	1.18E-10	H
	produce	2.02E-10	H	4.37E-05	H
Fisher	inhalation	1.96E-08	H	0.00055	H
	oral	4.81E-10	H	2.08E-05	H
	soil	2.92E-16	H	1.26E-11	H
	produce	4.19E-10	H	1.81E-05	H
	fish	7.47E-13	H	3.23E-08	H

Table 6-5
Maximum Impact COPC Carcinogenic Risk and Non-carcinogenic Hazard – DAVINCH Technology (Continued)

Exposure Scenario	Exposure Pathway	Carcinogenic Risk		Non Carcinogenic Hazard	
		Max Cancer Risk	From COPC	Max HQ	From COPC
Fisher Child	inhalation	3.93E-09	H	5.45E-04	H
	oral	2.29E-10	H	4.96E-05	H
	soil	5.45E-16	H	1.18E-10	H
	produce	2.02E-10	H	4.37E-05	H
	fish	1.05E-13	H	2.28E-08	H
Farmer	inhalation	2.62E-08	H	5.45E-04	H
	oral	6.41E-09	H	2.08E-04	H
	soil	6.07E-18	H	1.26E-11	H
	produce	8.20E-10	H	2.67E-05	H
	beef	1.20E-09	H	3.90E-05	H
	milk	4.28E-09	H	1.39E-04	H
	pork	2.84E-11	H	9.23E-07	H
	egg	2.38E-18	H	4.95E-12	H
	chicken	3.66E-18	H	7.64E-12	H

Table 6-5
Maximum Impact COPC Carcinogenic Risk and Non-carcinogenic Hazard – DAVINCH Technology (Continued)

Exposure Scenario	Exposure Pathway	Carcinogenic Risk		Non Carcinogenic Hazard	
		Max Cancer Risk	From COPC	Max HQ	From COPC
Farmer Child	inhalation	3.93E-09	H	5.45E-04	H
	oral	1.50E-09	H	3.25E-04	H
	soil	5.45E-16	H	1.18E-10	H
	produce	2.96E-10	H	6.41E-05	H
	beef	1.11E-10	H	2.40E-05	H
	milk	1.07E-09	H	2.31E-04	H
	pork	3.26E-12	H	7.05E-07	H
	egg	1.65E-17	H	3.57E-12	H
	chicken	2.40E-17	H	5.21E-12	H
Acute Exposure	inh	NA	NA	2.13E-04	hydrogen chloride

Table 6-6
Total Carcinogenic Risk and Non-carcinogenic Hazard – TDC Technology

Exposure Scenario	Scenario Location	Cancer Risk (Benchmark = 1E-05)			Total Hazard Index (Benchmark = 0.25)		
		Oral	Inhalation	Total	Oral	Inhalation	Total
Adult Resident	Rmax	1.60E-10	2.41E-08	2.42E-08	0.000007	0.001194	0.001201
Child Resident	Rmax	7.17E-11	4.81E-09	4.89E-09	0.000015	0.001194	0.001209
Fisher	Rmax	1.72E-10	2.41E-08	2.42E-08	0.000007	0.001194	0.001201
Fisher Child	Rmax	7.33E-11	4.81E-09	4.89E-09	0.000015	0.001194	0.001209
Farmer	Fmax	8.19E-09	3.21E-08	4.03E-08	0.000060	0.001194	0.001254
Farmer Child	Fmax	1.78E-09	4.81E-09	6.60E-09	0.000093	0.001194	0.001287
Acute Exposure	Amax	--	--	--	--	0.000831	--

Table 6-7
Maximum Impact COPC Carcinogenic Risk and Non-carcinogenic Hazard – TDC Technology

Exposure Scenario	Exposure Pathway	Carcinogenic Risk		Non Carcinogenic Hazard	
		Max Cancer Risk	From COPC	Max HQ	From COPC
Adult Resident	inhalation	2.32E-08	H	6.45E-04	H
	oral	1.50E-10	H	6.48E-06	H
	soil	3.52E-15	bis(2-ethylhexyl)-phthalate	8.60E-09	mercuric chloride
	produce	6.35E-12	1,4-dioxane	1.17E-07	mercuric chloride
Child Resident	inhalation	4.64E-09	H	6.45E-04	H
	oral	6.69E-11	H	1.45E-05	H
	soil	6.58E-15	bis(2-ethylhexyl)-phthalate	8.03E-08	mercuric chloride
	produce	2.82E-12	1,4-dioxane	2.61E-07	mercuric chloride
Fisher	inhalation	2.32E-08	H	6.45E-04	H
	oral	1.61E-10	H	6.98E-06	H
	soil	3.52E-15	bis(2-ethylhexyl)-phthalate	8.60E-09	mercuric chloride
	produce	6.35E-12	1,4-dioxane	1.17E-07	mercuric chloride
	fish	1.14E-11	H	4.92E-07	H

Table 6-7
Maximum Impact COPC Carcinogenic Risk and Non-carcinogenic Hazard – TDC Technology (Continued)

Exposure Scenario	Exposure Pathway	Carcinogenic Risk		Non Carcinogenic Hazard	
		Max Cancer Risk	From COPC	Max HQ	From COPC
Fisher Child	inhalation	4.64E-09	H	6.45E-04	H
	oral	6.85E-11	H	1.48E-05	H
	soil	6.58E-15	bis(2-ethylhexyl)-phthalate	8.03E-08	mercuric chloride
	produce	2.82E-12	1,4-dioxane	2.61E-07	mercuric chloride
	fish	1.60E-12	H	3.46E-07	H
Farmer	inhalation	3.10E-08	H	6.45E-04	H
	oral	7.97E-09	bis(2-ethylhexyl)-phthalate	4.98E-05	bis(2-ethylhexyl)-phthalate
	soil	9.84E-17	bis(2-ethylhexyl)-phthalate	8.60E-09	mercuric chloride
	produce	1.99E-11	bis(2-ethylhexyl)-phthalate	1.63E-06	mercuric chloride
	beef	1.72E-09	bis(2-ethylhexyl)-phthalate	1.08E-05	bis(2-ethylhexyl)-phthalate
	milk	6.16E-09	bis(2-ethylhexyl)-phthalate	3.85E-05	bis(2-ethylhexyl)-phthalate
	pork	6.49E-11	bis(2-ethylhexyl)-phthalate	4.06E-07	bis(2-ethylhexyl)-phthalate
	egg	2.67E-17	bis(2-ethylhexyl)-phthalate	2.58E-09	mercuric chloride
	chicken	4.11E-17	bis(2-ethylhexyl)-phthalate	2.27E-09	mercuric chloride

Table 6-7
Maximum Impact COPC Carcinogenic Risk and Non-carcinogenic Hazard – TDC Technology (Continued)

Exposure Scenario	Exposure Pathway	Carcinogenic Risk		Non Carcinogenic Hazard	
		Max Cancer Risk	From COPC	Max HQ	From COPC
Farmer Child	inhalation	4.64E-09	H	6.45E-04	H
	oral	1.71E-09	bis(2-ethylhexyl)-phthalate	7.12E-05	bis(2-ethylhexyl)-phthalate
	soil	6.58E-15	bis(2-ethylhexyl)-phthalate	8.03E-08	mercuric chloride
	produce	7.24E-12	bis(2-ethylhexyl)-phthalate	3.90E-06	mercuric chloride
	beef	1.59E-10	bis(2-ethylhexyl)-phthalate	6.62E-06	bis(2-ethylhexyl)-phthalate
	milk	1.53E-09	bis(2-ethylhexyl)-phthalate	6.39E-05	bis(2-ethylhexyl)-phthalate
	pork	7.44E-12	bis(2-ethylhexyl)-phthalate	3.10E-07	bis(2-ethylhexyl)-phthalate
	egg	1.37E-16	bis(2-ethylhexyl)-phthalate	1.86E-09	mercuric chloride
	chicken	2.00E-16	bis(2-ethylhexyl)-phthalate	1.55E-09	mercuric chloride
Acute Exposure	inh	NA	NA	5.22E-04	elemental mercury

Table 6-8
Total Carcinogenic Risk and Non-carcinogenic Hazard – SDC Technology

Exposure Scenario	Scenario Location	Cancer Risk (Benchmark = 1E-05)			Total Hazard Index (Benchmark = 0.25)		
		Oral	Inhalation	Total	Oral	Inhalation	Total
Adult Resident	Rmax	2.48E-12	4.62E-10	4.65E-10	0.00000010	0.00001121	0.00001131
Child Resident	Rmax	1.11E-12	9.24E-11	9.35E-11	0.00000022	0.00001121	0.00001144
Fisher	Rmax	2.67E-12	4.62E-10	4.65E-10	0.00000011	0.00001121	0.00001132
Fisher Child	Rmax	1.14E-12	9.24E-11	9.36E-11	0.00000023	0.00001121	0.00001144
Farmer	Fmax	7.65E-10	6.16E-10	1.38E-09	0.00000496	0.00001121	0.00001617
Farmer Child	Fmax	1.64E-10	9.24E-11	2.57E-10	0.00000716	0.00001121	0.00001838
Acute Exposure	Amax	--	--	--	--	0.00039477	--

Table 6-9
Maximum Impact COPC Carcinogenic Risk and Non-carcinogenic Hazard – SDC Technology

Exposure Scenario	Exposure Pathway	Carcinogenic Risk		Non Carcinogenic Hazard	
		Max Cancer Risk	From COPC	Max HQ	From COPC
Adult Resident	inhalation	3.40E-10	H	9.45E-06	H
	oral	2.20E-12	H	9.52E-08	H
	soil	2.85E-16	bis(2-ethylhexyl)-phthalate	2.84E-12	bis(2-ethylhexyl)-phthalate
	produce	1.72E-13	bis(2-ethylhexyl)-phthalate	1.44E-09	bis(2-ethylhexyl)-phthalate
Child Resident	inhalation	6.80E-11	H	9.45E-06	H
	oral	9.82E-13	H	2.13E-07	H
	soil	5.33E-16	bis(2-ethylhexyl)-phthalate	2.65E-11	bis(2-ethylhexyl)-phthalate
	produce	8.26E-14	bis(2-ethylhexyl)-phthalate	3.47E-09	bis(2-ethylhexyl)-phthalate
Fisher	inhalation	3.40E-10	H	9.45E-06	H
	oral	2.36E-12	H	1.02E-07	H
	soil	2.85E-16	bis(2-ethylhexyl)-phthalate	2.84E-12	bis(2-ethylhexyl)-phthalate
	produce	1.72E-13	bis(2-ethylhexyl)-phthalate	1.44E-09	bis(2-ethylhexyl)-phthalate
	fish	1.66E-13	H	7.21E-09	H

Table 6-9
Maximum Impact COPC Carcinogenic Risk and Non-carcinogenic Hazard – SDC Technology (Continued)

Exposure Scenario	Exposure Pathway	Carcinogenic Risk		Non Carcinogenic Hazard	
		Max Cancer Risk	From COPC	Max HQ	From COPC
Fisher Child	inhalation	6.80E-11	H	9.45E-06	H
	oral	1.01E-12	H	2.18E-07	H
	soil	5.33E-16	bis(2-ethylhexyl)-phthalate	2.65E-11	bis(2-ethylhexyl)-phthalate
	produce	8.26E-14	bis(2-ethylhexyl)-phthalate	3.47E-09	bis(2-ethylhexyl)-phthalate
	fish	2.34E-14	H	5.07E-09	H
Farmer	inhalation	4.54E-10	H	9.45E-06	H
	oral	7.62E-10	bis(2-ethylhexyl)-phthalate	4.76E-06	bis(2-ethylhexyl)-phthalate
	soil	6.23E-18	bis(2-ethylhexyl)-phthalate	2.84E-12	bis(2-ethylhexyl)-phthalate
	produce	1.87E-12	bis(2-ethylhexyl)-phthalate	1.18E-08	bis(2-ethylhexyl)-phthalate
	beef	1.65E-10	bis(2-ethylhexyl)-phthalate	1.03E-06	bis(2-ethylhexyl)-phthalate
	milk	5.89E-10	bis(2-ethylhexyl)-phthalate	3.68E-06	bis(2-ethylhexyl)-phthalate
	pork	6.21E-12	bis(2-ethylhexyl)-phthalate	3.88E-08	bis(2-ethylhexyl)-phthalate
	egg	1.69E-18	bis(2-ethylhexyl)-phthalate	7.70E-13	bis(2-ethylhexyl)-phthalate
	chicken	2.60E-18	bis(2-ethylhexyl)-phthalate	1.19E-12	bis(2-ethylhexyl)-phthalate

Table 6-9
Maximum Impact COPC Carcinogenic Risk and Non-carcinogenic Hazard – SDC Technology (Continued)

Exposure Scenario	Exposure Pathway	Carcinogenic Risk		Non Carcinogenic Hazard	
		Max Cancer Risk	From COPC	Max HQ	From COPC
Farmer Child	inhalation	6.80E-11	H	9.45E-06	H
	oral	1.63E-10	bis(2-ethylhexyl)-phthalate	6.80E-06	bis(2-ethylhexyl)-phthalate
	soil	5.33E-16	bis(2-ethylhexyl)-phthalate	2.65E-11	bis(2-ethylhexyl)-phthalate
	produce	6.78E-13	bis(2-ethylhexyl)-phthalate	2.83E-08	bis(2-ethylhexyl)-phthalate
	beef	1.52E-11	bis(2-ethylhexyl)-phthalate	6.33E-07	bis(2-ethylhexyl)-phthalate
	milk	1.47E-10	bis(2-ethylhexyl)-phthalate	6.11E-06	bis(2-ethylhexyl)-phthalate
	pork	7.11E-13	bis(2-ethylhexyl)-phthalate	2.96E-08	bis(2-ethylhexyl)-phthalate
	egg	1.11E-17	bis(2-ethylhexyl)-phthalate	5.55E-13	bis(2-ethylhexyl)-phthalate
	chicken	1.62E-17	bis(2-ethylhexyl)-phthalate	8.09E-13	bis(2-ethylhexyl)-phthalate
Acute Exposure	inh	NA	NA	3.00E-04	H

Table 6-10
Summary of Incremental EDT Impacts and Cumulative BGCAPP Impacts

Hazard and Risk Characterization from EDT Facility Only									
Exposure Scenario	**Scenario Location**	**Total Cancer Risk (Benchmark = 1E-05)**				**Total Hazard Index (Benchmark = 0.25)**			
		Davinch	EDS	TDC	SDC	Davinch	EDS	TDC	SDC
Adult Resident	Rmax	2.01E-08	3.05E-10	2.42E-08	4.65E-10	0.000681	0.0000085	0.00120	0.000011
Child Resident	Rmax	4.16E-09	6.15E-11	4.89E-09	9.35E-11	0.000710	0.0000086	0.00121	0.000011
Fisher	Rmax	2.01E-08	3.05E-10	2.42E-08	4.65E-10	0.000681	0.0000085	0.00120	0.000011
Fisher Child	Rmax	4.16E-09	6.15E-11	4.89E-09	9.36E-11	0.000710	0.0000086	0.00121	0.000011
Farmer	Fmax	**3.26E-08**	**4.07E-10**	**4.03E-08**	**1.38E-09**	0.000868	0.0000085	0.00125	0.000016
Farmer Child	Fmax	5.43E-09	6.15E-11	6.60E-09	2.57E-10	**0.000985**	**0.0000086**	**0.00129**	**0.000018**
Acute Exposure	Amax	--	--	--	--	0.000246	0.0000104	**0.00083**	0.000395
Worst-Case Hazard and Risk Characterization from EDT Facility and BGCAPP Facility									
Farmer	Fmax	2.13E-07	1.80E-07	**2.20E-07**	1.81E-07				
Farmer Child	Fmax					0.013385	0.0124086	**0.01369**	0.012418
Acute Exposure	Amax	--	--	--	--	0.025846	0.0256104	**0.02643**	0.025995

Notes:

[a] US EPA Region 6 recommends that a hazard index benchmark of 0.25 be utilized to account for COPCs (compounds of potential concern) in areas with industrial activity. Although significant industrial activities do not exist near BGCAPP, this very conservative benchmark was used for comparison to emissions to ensure risks were not underestimated.

[b] The acute risk assessment scenario evaluates short-term 1-hour maximum air concentrations based on hourly emission rates. Inhalation is the route of exposure.

Table 6-11
Summary Results of Multi-Pathway Human Health Risk Assessment

Effect	Maximum Calculated Value	Benchmark for Comparison	Exposure with Highest Value
Non-carcinogenic Chronic Health Effect	HQ=0.01369	HI=0.25[a]	Farmer Child
Non-carcinogenic Acute Health Effect	AHQ=0.02643	HI=0.25 [a]	Acute Risk[b]
Increased Carcinogenic Risk	$2.2x10^{-7}$	$1.0x10^{-5}$	Adult Farmer

Notes:

[a] U.S. EPA Region 6 recommends that a hazard index benchmark of 0.25 be utilized to account for COPCs (compounds of potential concern) in areas with industrial activity. Although significant industrial activities do not exist near BGCAPP, this very conservative benchmark was used for comparison to emissions ensure risks were not underestimated.

[b] The acute risk assessment scenario evaluates short-term 1-hour maximum air concentrations based on hourly emission rates. Inhalation is the route of exposure.

7.0 UNCERTAINTY IN HUMAN HEALTH RISK ASSESSMENT

This section of the report includes a discussion on interpreting the inherent uncertainty associated with risk assessment activities. Since the potential for the introduction of uncertainty is evident at every step of the risk assessment process, conservatism is utilized for many point values and assumptions, to ensure that the overall risk and hazard estimation overestimates the potential for health effects. Based on this approach, there is great potential for overstating risk and hazard due to the integration of so many conservative approximations throughout the risk assessment. In general, if a risk assessment yields results that indicate greater than acceptable levels of risk or hazard, these conservative assumptions are reevaluated. If using site-specific information can minimize this uncertainty, the conservative assumptions may be replaced with more realistic site-specific data or conditions. A screening level risk assessment generally includes more conservative approximations than a complete multi-pathway site specific risk assessment. This MPHHRA incorporates many layers of conservatism. The overall risk assessment results did NOT indicate a need to further refine these conservative assumptions to more closely approximate site-specific conditions. Therefore, all of the initial conservative assumptions will be maintained in the risk assessment and this section of the report will focus on the identification of the assumptions that may be responsible for the greatest areas of overestimation of risk and hazard.

Additionally, this section of the report discusses some of the types of uncertainty in any risk assessment, as well as uncertainties introduced as a result of unknowns for this specific project. A thorough discussion of the uncertainties inherent in the process enables the reviewer to more accurately evaluate the conservative nature of the SLHHRA. The discussion includes the types of uncertainty, areas of introduction, and methods for qualitatively and quantitatively addressing uncertainty in the risk assessment.

7.1 Types of Uncertainty

The four types of uncertainty are:

1. Variable uncertainty,
2. Model uncertainty,
3. Decision-rule uncertainty, and
4. Variability.

Each of these uncertainties is addressed in the sections that follow.

7.1.1 Variable Uncertainty

Variable uncertainty involves the conservatism resulting from the assumption of equation variables that cannot be measured with accuracy or precision. Model variables for each EDT are provided in the respective appendices to the report. Many variables are shown in the appendices that are assumed for processes regardless of the site conditions. Some of these variables are biotransfer coefficients for various food products and values related to erosion and soil characteristics. Variable uncertainty is discussed in Appendices B and C of the HHRAP guidance. In these appendices, variable uncertainty is addressed specifically for many of the equations. For example, in Table B-3-9 the uncertainty associated with the variable Br_{forage}, which is a plant-soil bio-concentration factor for forage, silage, and grain, includes the following: "U.S. EPA OSW recommends that uptake of organic COPCs from soil and transport of the COPCs to aboveground plant parts be calculated on the basis of a regression equation developed in a study of the uptake of 29 organic compounds. This regression equation, developed by Travis and Arms (1988), may not accurately represent the behavior of all classes of organic COPCs under site-specific conditions."

The selection of emission rates for each of the EDT alternatives represents variable uncertainty specific to this MPHHRA. For example, 0.2 times the VSL of mustard (H) was utilized as a continuous HD emission rate during the processing of overpacks and rejects. The EDT processes are not continuous operations, and therefore a continuous HD emission rate cannot be produced. Even given an HD leak, the HD emission would eventually be stopped when the leak was discovered or the munition treated. In the case of the EDS, overpacks are unpacked before processing, but this again cannot produce continuous emissions of the magnitude used in the MPHHRA. Since the emissions of this individual COPC accounted for a number of the maximum impacts in the MPHHRA (See Tables 6-3, 6-5, 6-7, and 6-9), the overestimation of this compound is a significant source of uncertainty and overestimation of risk/hazard.

For the SDC and TDC emission rates, information provided by the equipment vendors and used for this MPHHRA are based on the quantitation limit, reporting level, or detection level during the test in which that COPC was identified. Therefore, emission rates provided may significantly overestimate risks for those compounds. Likewise, TDC PCDD/PCDF emission rates were obtained by scaling up emission test data by an assumed factor of 4 to account for the ratio of agent feed rates for the 155-mm, while the true feed ratio for 155-mm munitions may be lower than that value. This assumption also introduces uncertainty and the potential for overestimation of the overall risk/ hazard result.

7.1.2 Model Uncertainty

Model uncertainty includes a wide variety of uncertainty associated with the inaccuracies of using surrogates for actual real-world data. Some examples are:

1. Using animal surrogates for carcinogenicity in humans,
2. Extrapolation of values in dose-response models,
3. Estimating fate and transport values for COPCs by computer modeling, and
4. Simplification of environmental processes due to modeling limitations.

Specific examples of model uncertainty include existing health problems of area residents. For instance, lung function and susceptibility are altered by smoking and asthma. Because the model does not account for this, risk from direct inhalation may be underestimated.

This risk assessment utilizes the widely-accepted AERMOD air dispersion model instead of ISCST, which was historically used and has more direct guidance techniques for use as a companion to the risk model. Although it is widely accepted that AERMOD much more accurately predicts the behavior of pollutants in the atmosphere and their ground-level concentrations, the use of this model also introduces new techniques that have not been as thoroughly tested for use in risk assessments.

7.1.3 Decision-Rule Uncertainty

Decision-rule uncertainty is related to the selection of compounds that are evaluated in the risk assessment and the use of recommended default values for inhalation, consumption, body mass, and health benchmarks.

7.1.4 Variability

The use of Agency-verified cancer SFs and RfDs/RfCs are considered under both Decision-Rule Uncertainty and Variability. These health benchmarks are used as single-point estimates throughout the analysis; and uncertainty and variability are both associated with them. U.S. EPA has developed a process for setting verified health benchmark values to be used in all Agency risk assessments. This process is used to account for much of the uncertainty and variability associated with the health benchmarks. With the exception of the dioxin toxicity equivalency methodology, health benchmarks can be found on EPA-recommended toxicity databases. These sources (IRIS, in particular), have been verified through Agency work groups. Estimating the uncertainty in using Agency-verified health benchmarks or the dioxin toxicity equivalency methodology is beyond the scope of this MPHHRA.

7.2 Qualitative Uncertainty

Many of the uncertainties associated with risk assessment can be discussed qualitatively, but not quantitatively. Examples of qualitative uncertainty include: actual periods of exposure as compared to default values, use of COPCs with uncharacterized toxicity data, or a lack of data related to a particular modeled parameter.

7.3 Quantitative Uncertainty

If a screening level risk assessment indicates that an unacceptable risk or hazard may result from the equipment, an attempt is made to quantify the uncertainties associated with the risk assessment that have known error levels.

Based on the availability of data, and the appropriateness of the specific process, one of two procedures is used to develop a quantitative result. Either statistical values, as deemed appropriate by sample type or size, are used; or, a probability distribution is created for this purpose. The end result of the process will be a calculated distribution of exposure, risk, or hazard. Probabilistic distributions will be presented in the risk assessment report, if appropriate, as Cumulative Probability Density Functions (CPFs). At this time, the results of the MPHHRA do not indicate that such a thorough handling of uncertainty is needed so quantitative uncertainty estimates will not be performed.

8.0 CONCLUSION/RECOMMENDATION

No further refinement of the risks/hazards of the proposed EDT facility (e.g., refinement of the air dispersion modeling parameters, nor additional risk evaluation) is needed due to the overall favorable results of this risk assessment. Calculations of risk/hazard developed using estimated facility emissions and the conservative assumptions made in this risk assessment also do not indicate that additional sampling to refine the concentration of pollutants in air emissions is necessary.

APPENDIX I

EDS TECHNOLOGY

RISK ASSESSMENT CALCULATIONS

"This document has been reviewed by RWR and no OPSEC-sensitive information was found.

This document has been reviewed for ITAR/EAR and no ITAR/EAR sensitive information was found.

TABLE OF CONTENTS

Risk Model Parameters ……..……1
Site-Specific and Default Constants ……...……6
Exposures Scenario Specific Data ……..7
Animal Exposure Data ……8
Waterbody and Watershed Specific Data ……...…9
Air Modeling Results ……....10
Emission Rates and Inputs from Vapor Air Modeling ……11
COPC Toxicity Data ……12
Calculations for Estimating Fish and Sediment Concentrations – Lake Vega ……16
Calculations for Estimating Fish and Sediment Concentrations – Lake Vega (For Non cancer Hazards) ……18
Calculations for Estimating Fish and Sediment Concentrations – Lake Vega (For Cancer Risks) ……20
Calculations for Estimating Drinking Water and Sediment Concentrations – Kentucky River ...22
Calculations for Estimating Drinking Water and Sediment Concentrations – Kentucky River (For Non Cancer Hazards) …….....24
Calculations for Estimating Drinking Water and Sediment Concentrations – Kentucky River (For Cancer Risks) ……...25
Calculations for Estimating Drinking Water and Sediment Concentrations – Kentucky River (For Cancer Risks – Exposure Duration > 30 Years) ……...26
Calculations for Land Based Media Concentrations “RMAX” ……...….27
Calculations for Land Based Media Concentrations “RMAX” (“RMAX” for Non Cancer Hazards) ……....28
Calculations for Land Based Media Concentrations “RMAX” (“RMAX” for Cancer Risks) ….29
Calculations for Land Based Media Concentrations (“FMAX”) ……30
Calculations for Land Based Media Concentrations (“FMAX” for Non Cancer Hazards) …….31
Calculations for Land Based Media Concentrations (“FMAX” for Child Cancer Risks) ……...33
Calculations for Land Based Media Concentrations (“FMAX” for Adult Cancer Risks) ……...35
COPC Intake and Cancer Risk Estimates (Adult Resident) ……..…37
COPC Intake and Cancer Risk Estimates (Child Resident) …….....38
COPC Intake and Cancer Risk Estimates (Fisher) ……...…39
COPC Intake and Cancer Risk Estimates (Child Fisher) …….……41
COPC Intake and Cancer Risk Estimates (Farmer) …….……43
COPC Intake and Cancer Risk Estimates (Farmer Child) …….……...46

TABLE OF CONTENTS (continued)

COPC Intake and Non Cancer Hazards Estimates (Adult Resident) ……....49
COPC Intake and Non Cancer Hazards Estimates (Child Resident) ……51
COPC Intake and Non Cancer Hazards Estimates (Fisher) ……..53
COPC Intake and Non Cancer Hazards Estimates (Fisher Child) ……....55
COPC Intake and Non Cancer Hazards Estimates (Farmer) ……....57
COPC Intake and Non Cancer Hazards Estimates (Farmer Child) ……...…60
Non Cancer Hazard Estimates for Acute Inhalation Exposure …….63
Summary of Estimated Cancer Risks and Non Cancer Hazards ……...…64
Summary of Estimated Maximum Cancer Risks and Non Cancer Hazards for Individuals COPCs and Exposure Pathways ……...65

RISK MODEL PARAMETERS
EDS TECHNOLOGY

Parameter	Units	Description	Category
BD	g soil/cm^3 soil	Soil bulk density	Constants
Bs	--	Soil bioavailability factor	Constants
Cd	--	Drag coefficient	Constants
Ev	cm/yr	Average annual evapotranspiration	Constants
I	cm/yr	Average annual irrigation	Constants
k	--	von Karman's constant	Constants
kp	1/yr	Plant surface loss coefficient	Constants
mu_a	g/cm/s	Viscosity of air	Constants
P	cm/yr	Average annual precipitation	Constants
R	atm-m^3/mol-K	Universal gas constant	Constants
rho_a	g/cm^3	Density of air	Constants
rho_soil	g/cm^3	Density of soil	Constants
rho_w	g/cm^3	Density of water	Constants
RO	cm/yr	Average annual surface runoff from pervious areas	Constants
T1	year	Time period at the beginning of combustion	Constants
Ta	K	Ambient air temperature	Constants
tD	year	Time period over which deposition occurs	Constants
theta_sw	mL/cm^3	Soil volumetric water content	Constants
Zs	cm	Soil mixing zone depth	Constants
Rp_ag	--	Interception fraction of the edible portion of above ground produce	Constants
Tp_ag	yr	Length of plant exposure to deposition per harvest of the edible portion of the ith plant group	Constants
Yp_ag	kg DW/m^2	Yield or standing crop biomass of the edible portion of the plant (productivity)	Constants
h_teq	days	Half-life of dioxin TEQ in adults	Constants
f1	--	Fraction of ingested dioxin that is stored in fat	Constants
f2	--	Fraction of mother's weight that is fat	Constants
f3	--	Fraction of mother's breast milk that is fat	Constants
f4	--	Fraction of ingested COPC that is absorbed	Constants
BW	kg	Body weight	Exposure Basis
BW_infant	kg	Body weight for infant	Exposure Basis
IR	m^3/hr	Inhalation rate	Exposure Basis
Crsoil	kg soil/day	Consumption rate of soil	Exposure Basis
Crag	kg DW plant/kg BW-day	Consumption rate of exposed aboveground produce	Exposure Basis
CRpp	kg DW plant/kg BW-day	Consumption rate of protected aboveground produce	Exposure Basis
CRbg	kg DW plant/kg BW-day	Consumption rate of belowground produce	Exposure Basis
CRdw	L water/day	Consumption rate of drinking water	Exposure Basis
Crfish	kg/kg-day	Consumption rate of fish	Exposure Basis
CRbmilk	kg/day	Ingestion rate of breast milk by the infant	Exposure Basis

RISK MODEL PARAMETERS
EDS TECHNOLOGY

Parameter	Units	Description	Category
Fsoil	--	Fraction of soil that is contaminated	Exposure Basis
Fproduce	--	Fraction of ingested produce that is contaminated (aka Fag)	Exposure Basis
Fdw	--	Fraction of drinking water that is contaminated	Exposure Basis
Ffish	--	Fraction of fish that is contaminated	Exposure Basis
ET	hours/day	Exposure time	Exposure Basis
EF	days/yr	Exposure frequency	Exposure Basis
ED	year	Exposure duration	Exposure Basis
AT_noncancer	year	Averaging time for estimating noncancer hazard	Exposure Basis
AT_cancer	year	Averaging time for estimating cancer risk	Exposure Basis
AT_nursing	year	Averaging time for estimating average daily dose for a nursing infant	Exposure Basis
eff		Exposure frequency factor (EF divided by 365 days/yr)	Exposure Basis
edf_nc	--	Exposure duration factor for noncancer hazard (ED/AT_noncancer)	Exposure Basis
edf_c	--	Exposure duration factor for cancer risk (ED/AT_cancer)	Exposure Basis
edf_nursing	--	Exposure duration factor for nursing infants	Exposure Basis
b	--	Empirical slope coefficient	Waterbody Input
AI	m^2	Impervious watershed area receiving COPC deposition	Waterbody Input
AL	m^2	Total watershed area receiving deposition	Waterbody Input
Aw	m^2	Waterbody Surface Area	Waterbody Input
C_usle	--	USLE cover management factor	Waterbody Input
CBS	g/cm^3	Bed sediment concentration	Waterbody Input
dbs	m	Depth of upper benthic sediment layer	Waterbody Input
dwc	m	Depth of water column	Waterbody Input
dz	m	Total water body depth	Waterbody Input
flipid	--	Fish lipid content	Waterbody Input
kb	1/yr	Benthic burial rate constant	Waterbody Input
K_usle	ton/acre	USLE erodibility factor	Waterbody Input
lambda_z	--	Dimensionless viscous sublayer thickness	Waterbody Input
LS_usle	--	USLE length-slope factor	Waterbody Input
mu_w	g/cm-s	Viscosity of water corresponding to water temperature	Waterbody Input
OCsed	--	Fraction of organic carbon in bottom sediment	Waterbody Input
PF_usle	--	USLE supporting practice factor	Waterbody Input
RF_usle	1/yr	USLE rainfall (or erosivity factor)	Waterbody Input
SD	--	Sediment delivery ratio (watershed)	Waterbody Input
theta	--	Temperature correction factor	Waterbody Input
theta_bs	--	Bed sediment concentration	Waterbody Input
TSS	mg/L	Total suspended solids concentration	Waterbody Input
Twk	K	Water body temperature	Waterbody Input
u	m/s	Current velocity	Waterbody Input
Vfx	m^3/yr	Average volumetric flow rate through water body	Waterbody Input

RISK MODEL PARAMETERS
EDS TECHNOLOGY

Parameter	Units	Description	Category
W	m/s	Average annual wind speed	Waterbody Input
Xe	kg/m^2-yr	Unit Soil loss	Waterbody Input
Cyv	µg-s/g-m^3	Unitized vapor phase air concentration (yearly average)	Air Model
Cyp	µg-s/g-m^3	Unitized particle phase air concentration (yearly average)	Air Model
Cypb	µg-s/g-m^3	Unitized particle-bound phase air concentration (yearly average)	Air Model
Dytv(Vdv)	s/m^2-yr	Unitized vapor phase total deposition (yearly average) as a function of the dry vapor deposition velocity	Air Model
Dytp	s/m^2-yr	Unitized particle phase total deposition (yearly average)	Air Model
Dytpb	s/m^2-yr	Unitized particle-bound phase total deposition (yearly average)	Air Model
Dydp	s/m^2-yr	Unitized particle phase dry deposition (yearly average)	Air Model
Dydpb	s/m^2-yr	Unitized particle-bound phase dry deposition (yearly average)	Air Model
Dywp	s/m^2-yr	Unitized particle phase wet deposition (yearly average)	Air Model
Dywpb	s/m^2-yr	Unitized particle-bound phase wet deposition (yearly average)	Air Model
Chv	µg-s/g-m^3	Unitized vapor phase air concentration (hourly maximum)	Air Model
Chp	µg-s/g-m^3	Unitized particle phase air concentration (hourly maximum)	Air Model
Chpb	µg-s/g-m^3	Unitized particle-bound phase air concentration (hourly maximum)	Air Model
Q	g/s	COPC emission rate impacting risk assessment area (chronic)	COPC Data
Qa	g/s	COPC emission rate impacting risk assessment area (acute)	COPC Data
kse	1/yr	COPC loss constant due to soil erosion	COPC Data
ksr	1/yr	COPC loss constant due to runoff	COPC Data
ksl	1/yr	COPC loss constant due to leaching	COPC Data
ksv	1/yr	COPC loss constant due to volatilization	COPC Data
ks	1/yr	COPC soil loss constant due to all processes	COPC Data
RfDo	mg/kg/day	Oral reference dose	COPC Data
RfC	mg/m^3	Reference concentration	COPC Data
CSFo	1/(mg/kg/day)	Oral cancer slope factor	COPC Data
URFi	1/(µg/m^3)	Inhalation unit risk factor	COPC Data
AIEC	mg/m^3	Acute inhalation exposure criterion	COPC Data
BAF	L/kg FW	Bioaccumulation factor for COPC in fish	COPC Data
BCFfish	L/kg FW	Bioconcentration factor for COPC in fish	COPC Data
BSAFfish	(mg/kg)/(mg/kg)	Biota-sediment accumulation factor	COPC Data
Brag	--	Plant-soil bioconcentration factor for given plant-type	COPC Data
Brroot	--	Plant-soil bioconcentration factor for given plant-type	COPC Data
Bvag	(mg/kg)/(mg/kg)	COPC air-to-plant biotransfer factor for given plant-type	COPC Data
Babeef	day/kg	Biotransfer factor-beef	COPC Data
Baeggs	day/kg	Biotransfer factor-eggs	COPC Data
Bamilk	day/kg	Biotransfer factor-milk	COPC Data
Bapork	day/kg	Biotransfer factor-pork	COPC Data
Bapoult	day/kg	Biotransfer factor-poultry	COPC Data

RISK MODEL PARAMETERS
EDS TECHNOLOGY

Parameter	Units	Description	Category
BCFegg	(mg/kg)/(mg/kg)	Biococentration factor-eggs	COPC Data
BCFpoult	(mg/kg)/(mg/kg)	Biococentration factor-poultry	COPC Data
Brf/s	unitless	Plant-soil bioconcentration factor for forage/silage	COPC Data
Bvforage	(mg/kg)/mg/kg)	COPC air-to-plant biotransfer factor-forage	COPC Data
Brgrain	unitless	Plant-soil biocontration factor for grain	COPC Data
Da	cm^2/s	Diffusivity of COPC in air	COPC Data
Dw	cm^2/s	Diffusivity of COPC in water	COPC Data
Fv	--	Fraction of COPC in vapor phase	COPC Data
H	atm·m^3/mol	Henry's Law constant	COPC Data
Kdbs	cm^3 water/g bed sediment	Bed sediment/sediment pore-water partition coefficient	COPC Data
Kds	cm^3 water/g soil	Soil-water partition coefficient	COPC Data
Kdsw	L water/kg suspended sediment	Suspended sediments/ surface water partition coefficient	COPC Data
Kow	--	Octanol-water partition coefficient	COPC Data
ksg	1/yr	COPC soil loss constant due to biotic and abiotic degradation	COPC Data
TEF	--	Toxicity equivalency factor	COPC Data
Fw	--	Fraction of COPC wet deposition that adheres to plant surfaces	COPC Data
ER	--	Soil enrichment ratio	COPC Data
Vdv	cm/s	Dry deposition velocity	COPC Data
Ds	mg COPC/kg soil/yr	Deposition term	Water Fate & Transport
Cstd	mg COPC/kg soil	Soil concentration at time tD	Water Fate & Transport
LDEP	g/yr	Total (wet and dry) particle phase and wet vapor phase COPC direct deposition load to water body	Water Fate & Transport
KG	m/yr	Gas phase transfer coefficient	Water Fate & Transport
KL	m/yr	Liquid phase transfer coefficient	Water Fate & Transport
Kv_overall	m/yr	Overall COPC transfer rate coefficient	Water Fate & Transport
Ldif	g/yr	Vapor phase COPC diffusion (dry deposition) load to water body	Water Fate & Transport
LRI	g/yr	Runoff load from impervious surfaces	Water Fate & Transport
fwc	--	Fraction of total water body COPC concentration in the water column	Water Fate & Transport
fbs	--	Fraction of total water body COPC concentration in benthic sediment	Water Fate & Transport
kv	1/yr	Water column volatilization rate constant	Water Fate & Transport
kwt	1/yr	Overall total water body COPC dissipation rate constant	Water Fate & Transport
Cs	mg COPC/kg DW soil	For cancer risk Cs is the average soil concentration over the exposure period. For noncancer health hazards Cs is equivalent to CstD.	Water Fate & Transport
LR	g/yr	Runoff load from pervious surfaces	Water Fate & Transport
LE	g/yr	Soil erosion load	Water Fate & Transport
LT	g/yr	Total COPC load to the water body (including deposition, runoff, and erosion)	Water Fate & Transport
Cwtot	g COPC/m^3 water body	Total water body COPC concentration (including water column and bed sediment)	Water Fate & Transport

RISK MODEL PARAMETERS
EDS TECHNOLOGY

Parameter	Units	Description	Category
Cwctot	mg COPC/L water column	Total COPC concentration in water column	Water Fate & Transport
Cdw	mg COPC/L water	Dissolved phase water concentration	Water Fate & Transport
Csb	mg COPC/kg sediment	COPC concentration sorbed to bed sediment	Water Fate & Transport
Cfish	mg COPC/kg FW tissue	Concentration of COPC in fish	Water Fate & Transport
Ca	µg/m^3	Air concentration	Land Fate & Transport
VGag	--	Empirical correction factor for reducing edible plant mater concentration. VG_ag and VG_bg are COPC-specific	Land Fate & Transport
Pd_ag	mg COPC/kg DW	Concentration of COPC in aboveground unprotected plants due to direct deposition	Land Fate & Transport
Pv_ag	mg COPC/kg WW	Concentration of COPC in aboveground produce due to air-to-plant transfer	Land Fate & Transport
Pr_ag	mg COPC/kg DW	Concentration of COPC in aboveground produce due to root uptake	Land Fate & Transport
Pr_bg	mg COPC/kg DW	Concentration of COPC in belowground produce due to root uptake	Land Fate & Transport
Pag	mg COPC/kg DW	Concentration of COPC in consumed potion of aboveground produce	Land Fate & Transport
Isoil	mg COPC/kg Bw-day	Daily intake of COPC from soil	Intake, Risk & Hazard
Iproduce	mg COPC/kg Bw-day	Daily intake of COPC from produce	Intake, Risk & Hazard
Ifish	mg COPC/kg Bw-day	Daily intake of COPC from fish	Intake, Risk & Hazard
Idw	mg COPC/kg Bw-day	Daily intake of COPC from drinking water	Intake, Risk & Hazard
I_oral	mg COPC/kg BW-day	Total intake via oral ingestion of contaminated media	Intake, Risk & Hazard
I_inh	mg COPC/kg BW-day	Intake of COPC intake via inhalation	Intake, Risk & Hazard
I_teq	mg COPC/kg BW-day	Daily intake of PCDDs, PCDFs, and PCBs as 2,3,7,8 TCDD TEQ	Intake, Risk & Hazard
Cbmilk	pg COPC/kg milk fat	COPC Concentration in milk fat of breast milk	Intake, Risk & Hazard
I_bmilk	pg COPC/kg BW infant/day	Intake of 2,3,7,8 TCDD TEQ for nursing infant (based on exposure scenario for the infant's mother)	Intake, Risk & Hazard
HQsoil	--	Hazard quotient	Intake, Risk & Hazard
HQproduce	--	Hazard quotient	Intake, Risk & Hazard
HQdw	--	Hazard quotient	Intake, Risk & Hazard
HQfish	--	Hazard quotient	Intake, Risk & Hazard
HQinh	--	Hazard quotient	Intake, Risk & Hazard
Cancer_oral	--	Individual lifetime cancer risk through oral exposure to COPC	Intake, Risk & Hazard
Cancer_inh	--	Individual lifetime cancer risk through inhalation exposure to COPC	Intake, Risk & Hazard
Cacute	µg/m^3	Acute air concentration	Intake, Risk & Hazard
AHQ_inh	--	Acute hazard quotient for inhalation of COPCs	Intake, Risk & Hazard

SITE-SPECIFIC AND DEFAULT CONSTANTS
EDS TECHNOLOGY

Parameter	Units	Value
BD	g/cm^3	1.5
Cd	--	0.0011
Ev	cm/yr	76.2
I	cm/yr	13.9
k	--	0.4
kp	1/yr	18
mu_a	g/cm/s	1.81E-04
P	cm/yr	113
R	atm-m^3/mol-K	8.205E-05
rho_a	g/cm^3	0.00120
rho_soil	g/cm^3	2.7
rho_w	g/cm^3	1.00
RO	cm/yr	45.72
T1	year	0
Ta	K	298
tD	yr	0.7500
theta_sw	mL/cm^3	0.2
Zs	cm	2
Rp_ag	--	0.39
Tp_ag	yr	0.16
Yp_ag	kg/m^2	2.24
Rp_f	--	0.5
Tp_f	yr	0.12
Yp_f	kg/m^2	0.24
Rp_s	--	0.46
Tp_s	yr	0.16
Yp_s	kg/m^2	0.8
VGf	--	1.0
VGs	--	0.5
MF_behp	--	0.01
h_teq	days	2,555
f1	--	0.90
f2	--	0.30
f3	--	0.04
f4	--	0.90

EXPOSURE SCENARIO SPECIFIC DATA
EDS TECHNOLOGY

Parameter	Units	Adult Resident	Child Resident	Subsistence Fisher	Subsistence Fisher Child	Farmer	Farmer Child
Scenario ID	--	**AR**	**CR**	**SF**	**SFC**	**F**	**FC**
BW	kg	70	15	70	15	70	15
IR	m^3/hr	0.83	0.497	0.83	0.497	0.83	0.497
CRsoil	kg/day	0.0001	0.0002	0.0001	0.0002	0.0001	0.0002
CRag	kg /kg/day	0.00032	0.00077	0.00032	0.00077	0.00047	0.00113
CRpp	kg /kg/day	0.00061	0.00150	0.00061	0.00150	0.00064	0.00157
CRbg	kg /kg/day	0.00014	0.00023	0.00014	0.00023	0.00017	0.00028
CRdw	L/day	1.4	0.67	1.4	0.67	1.4	0.67
CRfish	kg/kg/day			1.25E-03	8.80E-04		
CRbeef						0.00122	0.00075
CRmilk						0.01367	0.02268
CRpork						0.00055	0.00042
CRegg						0.00075	0.00054
CRchicken						0.00066	0.00045
Fsoil	--	1	1	1	1	1	1
Fproduce	--	1	1	1	1	1	1
Fdw	--	1	1	1	1	1	1
Ffish	--	0	0	1	1		
Fbeef						1	1
Fmilk						1	1
Fpork						1	1
Feggs						1	1
Fchicken						1	1
ET	hr/day	24	24	24	24	24	24
EF	day/yr	350	350	350	350	350	350
ED	yr	30	6	30	6	40	6
AT_noncancer	yr	30	6	30	6	40	6
AT_cancer	yr	70	70	70	70	70	70
eff	--	0.959	0.959	0.959	0.959	0.959	0.959
edf_nc	--	1	1	1	1	1	1
edf_c	--	0.4286	0.0857	0.4286	0.0857	0.5714	0.0857
Exposure to Receptor's Nursing Infant							
BW_infant	kg	9.4		9.4		9.4	
CRbmilk	kg/day	0.688		0.688		0.688	
edf_nursing	--	1		1		1	

ANIMAL EXPOSURE DATA
EDS TECHNOLOGY

Parameter	Units	Cow (beef)	Cow (dairy)	Pig (pork)	Chicken (egg)	Chicken
F_f	--	1	1	0	0	0
F_s		1	1	1	0	0
F_g		1	1	1	1	1
Qp_f	kg/day	8.8	13.2	0	0	0
Qp_s	kg/day	2.5	4.1	1.4	0	0
Qp_g	kg/day	0.47	3	3.3	0.2	0.2
Qs	kg/day	0.5	0.4	0.37	0.022	0.022

WATERBODY AND WATERSHED SPECIFIC DATA
EDS TECHNOLOGY

Parameter	Units	Waterbody 1	Source	Waterbody 2	Source
Name	--	Lake Vega		Upper Kentucky River	
Waterbody_type	--	Lake		River	
b	--	0.125		0.125	
AI	m^2	1.00E+06	(1)	1.00E+07	(1)
AL	m^2	1.00E+08	(1)	6.00E+08	(1)
Aw	m^2	5.46E+05	(2)	2.00E+06	(1)
C_usle	--	0.1		0.1	
CBS	g/cm^3	1		1	
dbs	m	0.03		0.03	
dwc	m	4.16	(2)	1.6	(1)
dz	m	4.19		1.63	
flipid	--	0.07		0.07	
kb	1/yr	0		1.00	
K_usle	ton/acre	0.39		0.39	
lambda_z	--	4		4	
LS_usle	--	1.5		1.5	
mu_w	g/cm-s	0.0169		0.0169	
OCsed	--	0.04		0.04	
PF_usle	--	1		1	
RF_usle	1/yr	200	(1)	200	(1)
SD	--	0.120		0.048	
theta	--	1.026		1.026	
theta_bs	--	0.6		0.6	
TSS	mg/L	10		10	
Twk	K	298		298	
u	m/s	0	(1)	0.49	(1)
Vfx	m^3/yr	4.00E+09	(1)	4.00E+08	(1)
W	m/s	3.78	(3)	3.78	(3)
Xe	kg/m^2-yr	2.62		2.62	

Aermod receptor on waterbody:

UTM N	m	745250		754650
UTM E	m	4176200		4184800

(1) OBOD Risk Assessment, Table D-6-3

(2) Howlett, David, *Blue Grass Army Depot to Improve Its Dam* , The Joint Ammunition Community's Bullet'n, Vol. 2, Issue 3, March 2007.

(3) 5-year average from meteorological data files

AIR MODELING RESULTS
EDS TECHNOLOGY

Parameter	Units	Rmax	Fmax	Waterbody1	Watershed	Amax	Waterbody2
Cyp	µg-s/g-m^3	0.10843	0.10843				
Cypb	µg-s/g-m^3	0.10843	0.10843				
Dytp	s/m^2-yr	0.00079	0.00079	0.000413	0.00079		0.00013
Dytpb	s/m^2-yr	0.00079	0.00079	0.000413	0.00079		0.00013
Dydp	s/m^2-yr	0.00079	0.00079				
Dydpb	s/m^2-yr	0.00079	0.00079				
Dywp	s/m^2-yr	0.00001	0.00001				
Dywpb	s/m^2-yr	0.00001	0.00001				
Chp	µg-s/g-m^3					130.044	
Chpb	µg-s/g-m^3					130.044	

Rmax: Maximum air modeling output data from residential exposure scenario locations
Fmax: Maximum air modeling output data from farmer exposure scenario locations
Waterbody: Maximum air modeling output data from receptor grid node locations over water.
Watershed: Maximum air modeling output data from receptor grid node locations over land.
Amax: Maximum air modeling output data from receptor grid node locations over land.

EMISSION RATES AND INPUTS FROM VAPOR AIR MODELING
EDS TECHNOLOGY

		EDS	EDS	EDS	EDS	EDS	EDS	EDS
CAS No.	**COPC Name**	**Q**	**Chv**	**Chv*Q**	**Cyv**	**Dytv**	**Cyv*Q**	**Dytv*Q**
117-81-7	Bis(2-ethylhexyl)-phthalate	0.00E+00	1.27E+02	0.00E+00	1.08E-01	1.59E-03	0.00E+00	0.00E+00
75-15-0	Carbon Disulfide	3.65E-05	1.31E+02	4.79E-03	1.09E-01	2.30E-04	3.96E-06	8.40E-09
64-17-5	Ethanol	1.52E-04	1.31E+02	2.00E-02	1.09E-01	1.50E-04	1.65E-05	2.28E-08
505-60-2	H	1.69E-06	1.33E+02	2.24E-04	1.09E-01	4.00E-05	1.83E-07	6.76E-11
74-82-8	Methane	9.09E-02	1.33E+02	1.21E+01	1.09E-01	1.00E-05	9.87E-03	9.09E-07
75-09-2	Methylene Chloride	0.00E+00	1.33E+02	0.00E+00	1.09E-01	2.00E-05	0.00E+00	0.00E+00
108-88-3	Toluene	2.10E-05	1.33E+02	2.80E-03	1.09E-01	2.00E-05	2.28E-06	4.21E-10
75-01-4	Vinyl Chloride	7.00E-06	1.33E+02	9.31E-04	1.09E-01	3.00E-05	7.60E-07	2.10E-10
7487-94-7	Mercuric Chloride	0.00E+00	1.25E+02	0.00E+00	1.04E-01	2.07E-02	0.00E+00	0.00E+00
7439-97-6	Elemental Mercury	0.00E+00	1.33E+02	0.00E+00	1.09E-01	1.00E-05	0.00E+00	0.00E+00
67-64-1	Acetone	7.59E-05	1.33E+02	1.01E-02	1.09E-01	5.00E-05	8.24E-06	3.79E-09

COPC TOXICITY DATA
EDS TECHNOLOGY

CAS No.	COPC Name	COPC Group	Q'	Q	Qa	kse	ksr	ksl	ksv	ks	VGag
			g/s	g/s	g/s	1/yr	1/yr	1/yr	1/yr	1/yr	--
117-81-7	Bis(2-ethylhexyl)-phthalate	Organic	1.00E+00				0.000	0.0000	0	11	0.01
75-15-0	Carbon Disulfide	Organic	1.00E+00	3.65E-05	5.74E-04		67.935	7.4695	1,801,581	1,801,657	0.01
64-17-5	Ethanol	Organic	1.00E+00	1.52E-04	2.39E-03		109.851	12.0782	4	125.862	1.00
505-60-2	H	Organic	1.00E+00	1.69E-06	2.37E-05		6.1617	0.67749	43.8	23,399.6	0.01
74-82-8	Methane	Organic	1.00E+00	9.09E-02	9.49E-01		69.168	7.6051	118,827,923	118,828,000	1.00
75-09-2	Methylene Chloride	Organic	1.00E+00				96.8644	10.65037	486,490	486,606	1.00
108-88-3	Toluene	Organic	1.00E+00	2.10E-05	5.53E-04		30.892	3.3966	83,811	8.39E+04	0.01
75-01-4	Vinyl Chloride	Organic	1.00E+00	7.00E-06	1.10E-04		89.47	9.838	4,064,514	4,064,614	1.00
7487-94-7	Mercuric Chloride	Inorganic	1.00E+00				0.000263	0.000029	0	0.00	1.00
7439-97-6	Elemental Mercury	Inorganic	1.00E+00				1.52E-02	1.68E-03	4.06654	4.0835	1.0000
67-64-1	Acetone	Organic	1.00E+00	7.59E-05	1.19E-03		69.17	7.605	2,921	3,034	1.00

COPC TOXICITY DATA
EDS TECHNOLOGY

CAS No.	COPC Name	COPC Group	VGbg	Fw	ER	Vdv	AIEC	TEF	URFi	CSFo	RfC	RfDo	BAF
			--	--	--	cm/s	mg/m^3	--	1/(µg/m^3)	1/(mg/kg/day)	mg/m^3	mg/kg/day	L/kg
117-81-7	Bis(2-ethylhexyl)-phthalate	Organic	0.01	0.600	3.00	0.500	1.00E+01		2.40E-06	1.40E-02		2.00E-02	194
75-15-0	Carbon Disulfide	Organic	0.01	0.600	3.00	0.500	6.20E+00				7.00E-01	1.00E-01	
64-17-5	Ethanol	Organic	1.00	0.600	3.00	0.500							
505-60-2	H	Organic	0.01	0.600	3.00	0.500	6.50E-02		4.00E-03	7.70E+00	2.10E-05	7.00E-06	
74-82-8	Methane	Organic	1.00	0.600	3.00	0.500	2.00E+03						
75-09-2	Methylene Chloride	Organic	1.00	0.600	3.00	0.500	1.40E+01		1.00E-08	7.50E-03	6.00E-01	6.00E-02	
108-88-3	Toluene	Organic	0.01	0.600	3.00	0.500	3.70E+01				5.00E+00	8.00E-02	
75-01-4	Vinyl Chloride	Organic	1.00	0.600	3.00	0.500	1.80E+02		4.29E-06	7.20E-01	1.00E-01	3.00E-03	
7487-94-7	Mercuric Chloride	Inorganic	1.00	0.600	1.00	0.500	4.00E+00				3.00E-05	3.00E-04	
7439-97-6	Elemental Mercury	Inorganic	1.0000	0.600	1.00	0.500	6.00E-04				3.00E-04		
67-64-1	Acetone	Organic	1.00	0.600	3.00	0.500	475.00				3.15	0.90	

COPC TOXICITY DATA
EDS TECHNOLOGY

CAS No.	COPC Name	COPC Group	BCFfish	BSAFfish	Brag	Brroot	Bvag	Babeef	Bamilk	Bapork	Baeggs	Bapoult	Brf/s
			L/kg	--	--	--	--	day/kg	day/kg	day/kg	day/kg	day/kg	--
117-81-7	Bis(2-ethylhexyl)-phthalate	Organic	53.3		0.0437	0.0009	150,975	0.03988	8.40E-03	0	0	0	0.044
75-15-0	Carbon Disulfide	Organic	10		2.07000	126.00000	0	0.00392	8.26E-04	0	0	0	2.0700
64-17-5	Ethanol	Organic	3		55.6551	155.2948	3	2.63E-05	5.54E-06	0	0	0	55.655
505-60-2	H	Organic	1.43E+01		1.57000	0.90946	1	0.00528	1.11E-03	0	0	0	1.5700
74-82-8	Methane	Organic	1		9.080	11.8658		5.90E-04			0.00001	0.000	9.080
75-09-2	Methylene Chloride	Organic	2.00E+00		6.8600	359.00000	0	8.76E-04	1.84E-04	0	0	0	6.8600
108-88-3	Toluene	Organic	23.9		1.07000	77.40000	0	0.00769	0.00162	0	0	0	1.0700
75-01-4	Vinyl Chloride	Organic	2.39E+00		6.0100	246.0000	0	0.00105	0.00022	0.001	0.00	0.00	6.0100
7487-94-7	Mercuric Chloride	Inorganic			0.015	0.036	1,800	0.00522	0.0023	0	0	0	
7439-97-6	Elemental Mercury	Inorganic											
67-64-1	Acetone	Organic	3.16E+00		8.3800	74.2000	0	0.00003	0.00001	0.000	0.00	0.00	8.3800

COPC TOXICITY DATA
EDS TECHNOLOGY

CAS No.	COPC Name	COPC Group	Bvforage	Brgrain	Da	Dw	Fv	H	Kdbs	Kds	Kdsw
			--	--	cm^2/s	cm^2/s	--	atm·m^3/mol	cm^3/g	cm^3/g	L/kg
117-81-7	Bis(2-ethylhexyl)-phthalate	Organic	150,975	0.0437	0.0351	3.66E-06		0.00000	4,440.0	2,300,000.0	8,325.0
75-15-0	Carbon Disulfide	Organic	0	2.07000	0.1040	1.00E-05	1.00000	0.030	2.7	0.1	5.0
64-17-5	Ethanol	Organic	3	55.6551	0.0000	1.23E-01	1.00000	0.000	0.0	0.0	0.0
505-60-2	H	Organic	1	1.57000	0.0650	7.50E-06	1.00000	0.0000	9	2	18
74-82-8	Methane	Organic		9.0800	0.2990	3.46E-05	1.00000	0.6580	0.4	0.1	0.7
75-09-2	Methylene Chloride	Organic	0	6.86000	0.1010	1.17E-05	1.00000	0.0022	0	0	1
108-88-3	Toluene	Organic	0	1.07000	0.0870	8.60E-06	1.00000	0.0066	5.6	0.4	10.5
75-01-4	Vinyl Chloride	Organic	0	6.01000	0.1060	1.23E-05	1	0.02700	6.20E-01	3.70E-02	1.15E+00
7487-94-7	Mercuric Chloride	Inorganic	1,800	0.009	0.0453	5.25E-06	0.85000	0	5.00E+04	5.80E+04	1.00E+05
7439-97-6	Elemental Mercury	Inorganic			0.011	3.01E-05	1.000	7.10E-03	3.00E+03	1.00E+03	1.00E+03
67-64-1	Acetone	Organic	0	8.38000	0.1240	1.14E-05	1	0.00004	2.00E-02	8.70E-02	4.00E-02

CALCULATIONS FOR ESTIMATING FISH AND SEDIMENT CONCENTRATIONS - LAKE VEGA EDS TECHNOLOGY

CAS No.	COPC Name	Ds	CstD	LDEP	KG	KL	Kv_overall
		mg/kg/yr	mg/kg	g/yr	m/yr	m/yr	m/yr
117-81-7	Bis(2-ethylhexyl)-phthalate	0.00E+00	0.00E+00	0.00E+00	275,183	89	1
75-15-0	Carbon Disulfide	2.80E-07	1.55E-13	4.59E-03	569,742	174	198
64-17-5	Ethanol	7.60E-07	6.04E-09	1.25E-02	1,382	95,720	2
505-60-2	H	2.25E-09	9.63E-14	3.69E-05	415,832	144	127
74-82-8	Methane	3.03E-05	2.55E-13	4.97E-01	1,156,020	400	455
75-09-2	Methylene Chloride	0.00E+00	0.00E+00	0.00E+00	558,677	193	219
108-88-3	Toluene	1.40E-08	1.67E-13	2.30E-04	505,526	157	179
75-01-4	Vinyl Chloride	7.00E-09	1.72E-15	1.15E-04	577,059	200	227
7487-94-7	Mercuric Chloride	0.00E+00	0.00E+00	0.00E+00	326,537	113	0
7439-97-6	Elemental Mercury	0.00E+00	0.00E+00	0.00E+00	125,702	364	410
67-64-1	Acetone	1.26E-07	4.17E-11	2.07E-03	641,000	190	182

CALCULATIONS FOR ESTIMATING FISH AND SEDIMENT CONCENTRATIONS - LAKE VEGA
EDS TECHNOLOGY

CAS No.	COPC Name	Ldif	LRI	fwc	fbs	kv	kwt
		g/yr	g/yr			1/yr	1/yr
117-81-7	Bis(2-ethylhexyl)-phthalate	0.00E+00	0.00E+00	0.033	0.967	2.79E-01	9.11E-03
75-15-0	Carbon Disulfide	3.49E-04	8.40E-03	0.977	0.023	4.73E+01	4.62E+01
64-17-5	Ethanol	1.42E-02	2.28E-02	0.996	0.004	4.65E-01	4.63E-01
505-60-2	H	1.04E-02	6.76E-05	0.933	0.067	3.04E+01	2.84E+01
74-82-8	Methane	9.11E-02	9.09E-01	0.993	0.007	1.09E+02	1.08E+02
75-09-2	Methylene Chloride	0.00E+00	0.00E+00	0.993	0.007	5.23E+01	5.19E+01
108-88-3	Toluene	8.26E-04	4.21E-04	0.957	0.043	4.27E+01	4.08E+01
75-01-4	Vinyl Chloride	8.55E-05	2.10E-04	0.991	0.009	5.43E+01	5.38E+01
7487-94-7	Mercuric Chloride	0.00E+00	0.00E+00	0.006	0.994	1.29E-03	7.10E-06
7439-97-6	Elemental Mercury	0.00E+00	0.00E+00	0.045	0.955	9.70E+01	4.32E+00
67-64-1	Acetone	5.14E-01	3.79E-03	0.996	0.004	4.35E+01	4.33E+01

CALCULATIONS FOR ESTIMATING FISH AND SEDIMENT CONCENTRATIONS - LAKE VEGA
EDS TECHNOLOGY
(for Noncancer Hazards)

CAS No.	COPC Name	Cs mg/kg	LR g/yr	LE g/yr	LT g/yr	Cwtot g/m^3	Cwctot mg/L	Cdw mg/L
117-81-7	Bis(2-ethylhexyl)-phthalate	0.00E+00	0.00E+00	0.00E+00	0.00E+00	0.00E+00	0.00E+00	0.00E+00
75-15-0	Carbon Disulfide	1.55E-13	3.13E-05	5.89E-09	1.34E-02	3.33E-12	3.28E-12	3.28E-12
64-17-5	Ethanol	6.04E-09	1.97E+00	2.20E-05	2.02E+00	5.07E-10	5.08E-10	5.08E-10
505-60-2	H	9.63E-14	1.76E-06	8.52E-09	1.05E-02	2.77E-12	2.60E-12	2.60E-12
74-82-8	Methane	2.55E-13	5.24E-05	9.41E-09	1.50E+00	3.55E-10	3.55E-10	3.55E-10
75-09-2	Methylene Chloride	0.00E+00	0.00E+00	0.00E+00	0.00E+00	0.00E+00	0.00E+00	0.00E+00
108-88-3	Toluene	1.67E-13	1.53E-05	1.14E-08	1.49E-03	3.80E-13	3.67E-13	3.67E-13
75-01-4	Vinyl Chloride	1.72E-15	4.58E-07	3.50E-11	4.11E-04	1.00E-13	1.00E-13	1.00E-13
7487-94-7	Mercuric Chloride	0.00E+00	0.00E+00	0.00E+00	0.00E+00	0.00E+00	0.00E+00	0.00E+00
7439-97-6	Elemental Mercury	0.00E+00	0.00E+00	0.00E+00	0.00E+00	0.00E+00	0.00E+00	0.00E+00
67-64-1	Acetone	4.17E-11	8.57E-03	1.54E-06	5.29E-01	1.30E-10	1.30E-10	1.30E-10

CALCULATIONS FOR ESTIMATING FISH AND SEDIMENT CONCENTRATIONS - LAKE VEGA
EDS TECHNOLOGY
(for Noncancer Hazards)

CAS No.	COPC Name	Csb mg/kg	Cfish mg/kg
117-81-7	Bis(2-ethylhexyl)-phthalate	0.00E+00	0.00E+00
75-15-0	Carbon Disulfide	8.68E-12	3.23E-11
64-17-5	Ethanol	1.10E-11	1.61E-09
505-60-2	H	2.43E-11	3.72E-11
74-82-8	Methane	1.24E-10	4.90E-10
75-09-2	Methylene Chloride	0.00E+00	0.00E+00
108-88-3	Toluene	2.05E-12	8.76E-12
75-01-4	Vinyl Chloride	6.22E-14	2.40E-13
7487-94-7	Mercuric Chloride	0.00E+00	0.00E+00
7439-97-6	Elemental Mercury	0.00E+00	0.00E+00
67-64-1	Acetone	2.60E-12	4.10E-10

CALCULATIONS FOR ESTIMATING FISH AND SEDIMENT CONCENTRATIONS - LAKE VEGA
EDS TECHNOLOGY
(for Cancer Risks)

CAS No.	COPC Name	Cs mg/kg	LR g/yr	LE g/yr	LT g/yr	Cwtot g/m^3	Cwctot mg/L	Cdw mg/L
117-81-7	Bis(2-ethylhexyl)-phthalate	0.00E+00	0.00E+00	0.00E+00	0.00E+00	0.00E+00	0.00E+00	0.00E+00
75-15-0	Carbon Disulfide	1.55E-13	3.13E-05	5.89E-09	1.34E-02	3.33E-12	3.28E-12	3.28E-12
64-17-5	Ethanol	5.97E-09	1.95E+00	2.17E-05	2.00E+00	5.02E-10	5.03E-10	5.03E-10
505-60-2	H	9.63E-14	1.76E-06	8.52E-09	1.05E-02	2.77E-12	2.60E-12	2.60E-12
74-82-8	Methane	2.55E-13	5.24E-05	9.41E-09	1.50E+00	3.55E-10	3.55E-10	3.55E-10
75-09-2	Methylene Chloride	0.00E+00	0.00E+00	0.00E+00	0.00E+00	0.00E+00	0.00E+00	0.00E+00
108-88-3	Toluene	1.67E-13	1.53E-05	1.14E-08	1.49E-03	3.80E-13	3.67E-13	3.67E-13
75-01-4	Vinyl Chloride	1.72E-15	4.58E-07	3.50E-11	4.11E-04	1.00E-13	1.00E-13	1.00E-13
7487-94-7	Mercuric Chloride	0.00E+00	0.00E+00	0.00E+00	0.00E+00	0.00E+00	0.00E+00	0.00E+00
7439-97-6	Elemental Mercury	0.00E+00	0.00E+00	0.00E+00	0.00E+00	0.00E+00	0.00E+00	0.00E+00
67-64-1	Acetone	4.17E-11	8.56E-03	1.54E-06	5.29E-01	1.30E-10	1.30E-10	1.30E-10

CALCULATIONS FOR ESTIMATING FISH AND SEDIMENT CONCENTRATIONS - LAKE VEGA
EDS TECHNOLOGY
(for Cancer Risks)

CAS No.	COPC Name	Csb mg/kg	Cfish mg/kg
117-81-7	Bis(2-ethylhexyl)-phthalate	0.00E+00	0.00E+00
75-15-0	Carbon Disulfide	8.68E-12	3.23E-11
64-17-5	Ethanol	1.09E-11	1.59E-09
505-60-2	H	2.43E-11	3.72E-11
74-82-8	Methane	1.24E-10	4.90E-10
75-09-2	Methylene Chloride	0.00E+00	0.00E+00
108-88-3	Toluene	2.05E-12	8.76E-12
75-01-4	Vinyl Chloride	6.22E-14	2.40E-13
7487-94-7	Mercuric Chloride	0.00E+00	0.00E+00
7439-97-6	Elemental Mercury	0.00E+00	0.00E+00
67-64-1	Acetone	2.60E-12	4.10E-10

CALCULATIONS FOR ESTIMATING DRINKING WATER AND SEDIMENT CONCENTRATIONS - KENTUCKY RIVER
EDS TECHNOLOGY

CAS No.	COPC Name	Ds mg/kg/yr	CstD mg/kg	LDEP g/yr	KG m/yr	KL m/yr	Kv_overall m/yr	Ldif g/yr
117-81-7	Bis(2-ethylhexyl)-phthalate				36,500	331	0	
75-15-0	Carbon Disulfide	2.80E-07	1.55E-13	1.68E-02	36,500	547	614	3.97E-03
64-17-5	Ethanol	7.60E-07	6.04E-09	4.56E-02	36,500	60,641	51	1.37E+00
505-60-2	H	2.25E-09	9.63E-14	1.35E-04	36,500	474	47	1.39E-02
74-82-8	Methane	3.03E-05	2.55E-13	1.82E+00	36,500	1,017	1,155	8.47E-01
75-09-2	Methylene Chloride				36,500	591	570	
108-88-3	Toluene	1.40E-08	1.67E-13	8.41E-04	36,500	507	548	9.28E-03
75-01-4	Vinyl Chloride	7.00E-09	1.72E-15	4.20E-04	36,500	606	679	9.35E-04
7487-94-7	Mercuric Chloride				36,500	396	0	
7439-97-6	Elemental Mercury				36,500	949	989.9	
67-64-1	Acetone	1.26E-07	4.17E-11	7.59E-03	36,500	584	60	6.22E-01

CALCULATIONS FOR ESTIMATING DRINKING WATER AND SEDIMENT CONCENTRATIONS - KENTUCKY RIVER
EDS TECHNOLOGY

CAS No.	COPC Name	LRI g/yr	fwc	fbs	kv 1/yr	kwt 1/yr
117-81-7	Bis(2-ethylhexyl)-phthalate		0.013	0.987	0.1	1.0
75-15-0	Carbon Disulfide	8.40E-02	0.943	0.057	376.8	355.2
64-17-5	Ethanol	2.28E-01	0.988	0.012	31.5	31.2
505-60-2	H	6.76E-04	0.8429	0.157	28.5	24.2
74-82-8	Methane	9.09E+00	0.982	0.018	708.7	696.3
75-09-2	Methylene Chloride		0.9816	0.018	349.6	343.2
108-88-3	Toluene	4.21E-03	0.896	0.104	336.3	301.4
75-01-4	Vinyl Chloride	2.10E-03	0.978	0.0224	416.7	407.4
7487-94-7	Mercuric Chloride		0.002	0.998	0.0	1.0
7439-97-6	Elemental Mercury		0.01764	0.982	601.3	11.6
67-64-1	Acetone	3.79E-02	0.989	0.0115	36.9	36.5

CALCULATIONS FOR ESTIMATING DRINKING WATER AND SEDIMENT CONCENTRATIONS - KENTUCKY RIVER
EDS TECHNOLOGY
(for Noncancer Hazards)

CAS No.	COPC Name	Cs	LR	LE	LT	Cwtot	Cwctot	Cdw	Csb
		mg/kg	g/yr	g/yr	g/yr	g/m^3	mg/L	mg/L	mg/kg
117-81-7	Bis(2-ethylhexyl)-phthalate	0.00E+00	0.00E+00	0.00E+00	0.00E+00	0.00E+00	0.00E+00	0.00E+00	0.00E+00
75-15-0	Carbon Disulfide	1.55E-13	1.87E-04	1.40E-08	1.05E-01	6.83E-11	6.56E-11	6.56E-11	1.74E-10
64-17-5	Ethanol	6.04E-09	1.17E+01	5.23E-05	1.34E+01	2.69E-08	2.71E-08	2.71E-08	5.86E-10
505-60-2	H	9.63E-14	1.05E-05	2.03E-08	1.47E-02	3.54E-11	3.04E-11	3.04E-11	2.84E-10
74-82-8	Methane	2.55E-13	3.12E-04	2.24E-08	1.18E+01	4.41E-09	4.42E-09	4.42E-09	1.55E-09
75-09-2	Methylene Chloride	0.00E+00	0.00E+00	0.00E+00	0.00E+00	0.00E+00	0.00E+00	0.00E+00	0.00E+00
108-88-3	Toluene	1.67E-13	9.14E-05	2.72E-08	1.44E-02	1.08E-11	9.81E-12	9.81E-12	5.49E-11
75-01-4	Vinyl Chloride	1.72E-15	2.73E-06	8.33E-11	3.46E-03	2.01E-12	2.00E-12	2.00E-12	1.24E-12
7487-94-7	Mercuric Chloride	0.00E+00	0.00E+00	0.00E+00	0.00E+00	0.00E+00	0.00E+00	0.00E+00	0.00E+00
7439-97-6	Elemental Mercury	0.00E+00	0.00E+00	0.00E+00	0.00E+00	0.00E+00	0.00E+00	0.00E+00	0.00E+00
67-64-1	Acetone	4.17E-11	5.10E-02	3.67E-06	7.18E-01	1.40E-09	1.41E-09	1.41E-09	2.81E-11

CALCULATIONS FOR ESTIMATING DRINKING WATER AND SEDIMENT CONCENTRATIONS - KENTUCKY RIVER
EDS TECHNOLOGY
(for Cancer Risks)

CAS No.	COPC Name	Cs mg/kg	LR g/yr	LE g/yr	LT g/yr	Cwtot g/m^3	Cwctot mg/L	Cdw mg/L	Csb mg/kg
117-81-7	Bis(2-ethylhexyl)-phthalate	0.00E+00	0.00E+00	0.00E+00	0.00E+00	0.00E+00	0.00E+00	0.00E+00	0.00E+00
75-15-0	Carbon Disulfide	1.55E-13	1.87E-04	1.40E-08	1.05E-01	6.83E-11	6.56E-11	6.56E-11	1.74E-10
64-17-5	Ethanol	5.97E-09	1.16E+01	5.18E-05	1.33E+01	2.67E-08	2.69E-08	2.69E-08	5.80E-10
505-60-2	H	9.63E-14	1.05E-05	2.03E-08	1.47E-02	3.54E-11	3.04E-11	3.04E-11	2.84E-10
74-82-8	Methane	2.55E-13	3.12E-04	2.24E-08	1.18E+01	4.41E-09	4.42E-09	4.42E-09	1.55E-09
75-09-2	Methylene Chloride	0.00E+00	0.00E+00	0.00E+00	0.00E+00	0.00E+00	0.00E+00	0.00E+00	0.00E+00
108-88-3	Toluene	1.67E-13	9.14E-05	2.72E-08	1.44E-02	1.08E-11	9.81E-12	9.81E-12	5.49E-11
75-01-4	Vinyl Chloride	1.72E-15	2.73E-06	8.33E-11	3.46E-03	2.01E-12	2.00E-12	2.00E-12	1.24E-12
7487-94-7	Mercuric Chloride	0.00E+00	0.00E+00	0.00E+00	0.00E+00	0.00E+00	0.00E+00	0.00E+00	0.00E+00
7439-97-6	Elemental Mercury	0.00E+00	0.00E+00	0.00E+00	0.00E+00	0.00E+00	0.00E+00	0.00E+00	0.00E+00
67-64-1	Acetone	4.17E-11	5.10E-02	3.66E-06	7.18E-01	1.40E-09	1.41E-09	1.41E-09	2.81E-11

CALCULATIONS FOR ESTIMATING DRINKING WATER AND SEDIMENT CONCENTRATIONS - KENTUCKY RIVER
EDS TECHNOLOGY
(for Cancer Risks - Exposure Duration > 30 years)

CAS No.	COPC Name	Cs mg/kg	LR g/yr	LE g/yr	LT g/yr	Cwtot g/m^3	Cwctot mg/L	Cdw mg/L	Csb mg/kg
117-81-7	Bis(2-ethylhexyl)-phthalate	0.00E+00	0.00E+00	0.00E+00	0.00E+00	0.00E+00	0.00E+00	0.00E+00	0.00E+00
75-15-0	Carbon Disulfide	2.91E-15	3.50E-06	2.63E-10	1.05E-01	6.82E-11	6.55E-11	6.55E-11	1.74E-10
64-17-5	Ethanol	1.13E-10	2.20E-01	9.81E-07	1.86E+00	3.75E-09	3.77E-09	3.77E-09	8.15E-11
505-60-2	H	1.81E-15	1.97E-07	3.80E-10	1.47E-02	3.54E-11	3.04E-11	3.04E-11	2.84E-10
74-82-8	Methane	4.78E-15	5.85E-06	4.20E-10	1.18E+01	4.41E-09	4.42E-09	4.42E-09	1.55E-09
75-09-2	Methylene Chloride	0.00E+00	0.00E+00	0.00E+00	0.00E+00	0.00E+00	0.00E+00	0.00E+00	0.00E+00
108-88-3	Toluene	3.14E-15	1.71E-06	5.09E-10	1.43E-02	1.07E-11	9.75E-12	9.75E-12	5.46E-11
75-01-4	Vinyl Chloride	3.23E-17	5.11E-08	1.56E-12	3.45E-03	2.01E-12	2.00E-12	2.00E-12	1.24E-12
7487-94-7	Mercuric Chloride	0.00E+00	0.00E+00	0.00E+00	0.00E+00	0.00E+00	0.00E+00	0.00E+00	0.00E+00
7439-97-6	Elemental Mercury	0.00E+00	0.00E+00	0.00E+00	0.00E+00	0.00E+00	0.00E+00	0.00E+00	0.00E+00
67-64-1	Acetone	7.82E-13	9.57E-04	6.87E-08	6.68E-01	1.30E-09	1.31E-09	1.31E-09	2.62E-11

CALCULATIONS FOR LAND BASED MEDIA CONCENTRATIONS
EDS TECHNOLOGY
"Rmax"

CAS No.	COPC Name	Ca µg/m^3	Ds mg/kg/yr	CstD mg/kg	Pd_ag mg/kg	Pv_ag mg/kg
117-81-7	Bis(2-ethylhexyl)-phthalate					
75-15-0	Carbon Disulfide	3.96E-06	2.80E-07	1.55E-13		4.94E-19
64-17-5	Ethanol	1.65E-05	7.60E-07	6.04E-09	9.99E-15	6.89E-12
505-60-2	H	1.83E-07	2.25E-09	9.63E-14	5.24E-14	1.61E-18
74-82-8	Methane	9.87E-03	3.03E-05	2.55E-13	6.44E-16	
75-09-2	Methylene Chloride					
108-88-3	Toluene	2.28E-06	1.40E-08	1.67E-13		2.55E-18
75-01-4	Vinyl Chloride	7.60E-07	7.00E-09	1.72E-15		2.84E-19
7487-94-7	Mercuric Chloride					
7439-97-6	Elemental Mercury					
67-64-1	Acetone	8.24E-06	1.26E-07	4.17E-11		4.15E-16

CALCULATIONS FOR LAND BASED MEDIA CONCENTRATIONS
EDS TECHNOLOGY
("Rmax" for Noncancer Hazards)

CAS No.	COPC Name	Cs mg/kg	Pr_ag mg/kg	Pag mg/kg	Pr_bg mg/kg
117-81-7	Bis(2-ethylhexyl)-phthalate	0.00E+00	0.00E+00	0.00E+00	0.00E+00
75-15-0	Carbon Disulfide	1.55E-13	3.22E-13	3.22E-13	1.96E-13
64-17-5	Ethanol	6.04E-09	3.36E-07	3.36E-07	9.38E-07
505-60-2	H	9.63E-14	1.51E-13	2.04E-13	8.76E-16
74-82-8	Methane	2.55E-13	2.32E-12	2.32E-12	3.03E-12
75-09-2	Methylene Chloride	0.00E+00	0.00E+00	0.00E+00	0.00E+00
108-88-3	Toluene	1.67E-13	1.79E-13	1.79E-13	1.29E-13
75-01-4	Vinyl Chloride	1.72E-15	1.04E-14	1.04E-14	4.24E-13
7487-94-7	Mercuric Chloride	0.00E+00	0.00E+00	0.00E+00	0.00E+00
7439-97-6	Elemental Mercury	0.00E+00	0.00E+00	0.00E+00	0.00E+00
67-64-1	Acetone	4.17E-11	3.49E-10	3.49E-10	3.09E-09

CALCULATIONS FOR LAND BASED MEDIA CONCENTRATIONS
EDS TECHNOLOGY
("Rmax" for Cancer Risks)

CAS No.	COPC Name	Cs mg/kg	Pr_ag mg/kg	Pag mg/kg	Pr_bg mg/kg
117-81-7	Bis(2-ethylhexyl)-phthalate	0.00E+00	0.00E+00	0.00E+00	0.00E+00
75-15-0	Carbon Disulfide	1.55E-13	3.22E-13	3.22E-13	1.96E-13
64-17-5	Ethanol	5.97E-09	3.33E-07	3.33E-07	9.28E-07
505-60-2	H	9.63E-14	1.51E-13	2.04E-13	8.76E-16
74-82-8	Methane	2.55E-13	2.32E-12	2.32E-12	3.03E-12
75-09-2	Methylene Chloride	0.00E+00	0.00E+00	0.00E+00	0.00E+00
108-88-3	Toluene	1.67E-13	1.79E-13	1.79E-13	1.29E-13
75-01-4	Vinyl Chloride	1.72E-15	1.04E-14	1.04E-14	4.24E-13
7487-94-7	Mercuric Chloride	0.00E+00	0.00E+00	0.00E+00	0.00E+00
7439-97-6	Elemental Mercury	0.00E+00	0.00E+00	0.00E+00	0.00E+00
67-64-1	Acetone	4.17E-11	3.49E-10	3.49E-10	3.09E-09

CALCULATIONS FOR LAND BASED MEDIA CONCENTRATIONS
EDS TECHNOLOGY
("Fmax")

CAS No.	COPC Name	Ca µg/m^3	Ds mg/kg/yr	CstD mg/kg	Pd_ag mg/kg	Pd_f mg/kg	Pd_s mg/kg	Pv_ag mg/kg	Pv_f mg/kg	Pv_s mg/kg
117-81-7	Bis(2-ethylhexyl)-phthalate									
75-15-0	Carbon Disulfide	3.96E-06	2.80E-07	1.55E-13				1.35E-14	1.35E-12	6.77E-13
64-17-5	Ethanol	1.65E-05	7.60E-07	6.04E-09	9.99E-15	1.12E-13	3.30E-14	4.53E-08	4.53E-08	2.27E-08
505-60-2	H	1.83E-07	2.25E-09	9.63E-14	5.24E-14	5.88E-13	1.73E-13	9.54E-13	9.54E-11	4.77E-11
74-82-8	Methane	9.87E-03	3.03E-05	2.55E-13	6.44E-16	7.23E-15	2.13E-15			
75-09-2	Methylene Chloride									
108-88-3	Toluene	2.28E-06	1.40E-08	1.67E-13				1.21E-13	1.21E-11	6.05E-12
75-01-4	Vinyl Chloride	7.60E-07	7.00E-09	1.72E-15				4.06E-14	4.06E-14	2.03E-14
7487-94-7	Mercuric Chloride									
7439-97-6	Elemental Mercury									
67-64-1	Acetone	8.24E-06	1.26E-07	4.17E-11				5.47E-12	5.47E-12	2.73E-12

CALCULATIONS FOR LAND BASED MEDIA CONCENTRATIONS
EDS TECHNOLOGY
("Fmax" for Noncancer Hazards)

CAS No.	COPC Name	Cs mg/kg	Pr_ag mg/kg	Pr_f mg/kg	Pr_s mg/kg	Pag mg/kg	Pr_bg mg/kg	Pf mg/kg
117-81-7	Bis(2-ethylhexyl)-phthalate							
75-15-0	Carbon Disulfide	1.55E-13	3.22E-13	3.22E-13	3.22E-13	3.35E-13	1.96E-13	1.67E-12
64-17-5	Ethanol	6.04E-09	3.36E-07	3.36E-07	3.36E-07	3.81E-07	9.38E-07	3.81E-07
505-60-2	H	9.63E-14	1.51E-13	1.51E-13	1.51E-13	1.16E-12	8.76E-16	9.62E-11
74-82-8	Methane	2.55E-13	2.32E-12	2.32E-12	2.32E-12	2.32E-12	3.03E-12	2.32E-12
75-09-2	Methylene Chloride							
108-88-3	Toluene	1.67E-13	1.79E-13	1.79E-13	1.79E-13	3.00E-13	1.29E-13	1.23E-11
75-01-4	Vinyl Chloride	1.72E-15	1.04E-14	1.04E-14	1.04E-14	5.09E-14	4.24E-13	5.09E-14
7487-94-7	Mercuric Chloride							
7439-97-6	Elemental Mercury							
67-64-1	Acetone	4.17E-11	3.49E-10	3.49E-10	3.49E-10	3.55E-10	3.09E-09	3.55E-10

CALCULATIONS FOR LAND BASED MEDIA CONCENTRATIONS
EDS TECHNOLOGY
("Fmax" for Noncancer Hazards)

CAS No.	COPC Name	Ps mg/kg	Pr_g mg/kg	Abeef mg/kg	Amilk mg/kg	Apork mg/kg	Aegg mg/kg	Achicken mg/kg
117-81-7	Bis(2-ethylhexyl)-phthalate							
75-15-0	Carbon Disulfide	9.98E-13	3.22E-13	6.85E-14	2.25E-14	1.19E-14	1.12E-16	1.96E-16
64-17-5	Ethanol	3.59E-07	3.36E-07	1.16E-10	4.16E-11	5.14E-11	7.46E-13	1.30E-12
505-60-2	H	4.80E-11	1.51E-13	5.10E-12	1.63E-12	4.34E-13	7.18E-17	1.26E-16
74-82-8	Methane	2.32E-12	2.32E-12	1.62E-14			4.69E-18	9.37E-18
75-09-2	Methylene Chloride							
108-88-3	Toluene	6.23E-12	1.79E-13	9.53E-13	3.05E-13	8.73E-14	1.28E-16	2.24E-16
75-01-4	Vinyl Chloride	3.06E-14	1.04E-14	5.59E-16	1.84E-16	9.91E-17	9.35E-19	1.64E-18
7487-94-7	Mercuric Chloride							
7439-97-6	Elemental Mercury							
67-64-1	Acetone	3.52E-10	3.49E-10	1.20E-13	4.33E-14	5.75E-14	8.52E-16	1.49E-15

CALCULATIONS FOR LAND BASED MEDIA CONCENTRATIONS
EDS TECHNOLOGY
("Fmax" for Child Cancer Risks)

CAS No.	COPC Name	Cs mg/kg	Pr_ag mg/kg	Pr_f mg/kg	Pr_s mg/kg	Pag mg/kg	Pr_bg mg/kg	Pf mg/kg
117-81-7	Bis(2-ethylhexyl)-phthalate							
75-15-0	Carbon Disulfide	1.55E-13	3.22E-13	3.22E-13	3.22E-13	3.35E-13	1.96E-13	1.67E-12
64-17-5	Ethanol	5.97E-09	3.33E-07	3.33E-07	3.33E-07	3.78E-07	9.28E-07	3.78E-07
505-60-2	H	9.63E-14	1.51E-13	1.51E-13	1.51E-13	1.16E-12	8.76E-16	9.62E-11
74-82-8	Methane	2.55E-13	2.32E-12	2.32E-12	2.32E-12	2.32E-12	3.03E-12	2.32E-12
75-09-2	Methylene Chloride							
108-88-3	Toluene	1.67E-13	1.79E-13	1.79E-13	1.79E-13	3.00E-13	1.29E-13	1.23E-11
75-01-4	Vinyl Chloride	1.72E-15	1.04E-14	1.04E-14	1.04E-14	5.09E-14	4.24E-13	5.09E-14
7487-94-7	Mercuric Chloride							
7439-97-6	Elemental Mercury							
67-64-1	Acetone	4.17E-11	3.49E-10	3.49E-10	3.49E-10	3.55E-10	3.09E-09	3.55E-10

CALCULATIONS FOR LAND BASED MEDIA CONCENTRATIONS
EDS TECHNOLOGY
("Fmax" for Child Cancer Risks)

CAS No.	COPC Name	Ps mg/kg	Pr_g mg/kg	Abeef mg/kg	Amilk mg/kg	Apork mg/kg	Aegg mg/kg	Achicken mg/kg
117-81-7	Bis(2-ethylhexyl)-phthalate							
75-15-0	Carbon Disulfide	9.98E-13	3.22E-13	6.85E-14	2.25E-14	1.19E-14	1.12E-16	1.96E-16
64-17-5	Ethanol	3.55E-07	3.33E-07	1.15E-10	4.12E-11	5.08E-11	7.38E-13	1.29E-12
505-60-2	H	4.80E-11	1.51E-13	5.10E-12	1.63E-12	4.34E-13	7.18E-17	1.26E-16
74-82-8	Methane	2.32E-12	2.32E-12	1.62E-14			4.69E-18	9.37E-18
75-09-2	Methylene Chloride							
108-88-3	Toluene	6.23E-12	1.79E-13	9.53E-13	3.05E-13	8.73E-14	1.28E-16	2.24E-16
75-01-4	Vinyl Chloride	3.06E-14	1.04E-14	5.59E-16	1.84E-16	9.91E-17	9.35E-19	1.64E-18
7487-94-7	Mercuric Chloride							
7439-97-6	Elemental Mercury							
67-64-1	Acetone	3.52E-10	3.49E-10	1.20E-13	4.33E-14	5.75E-14	8.52E-16	1.49E-15

CALCULATIONS FOR LAND BASED MEDIA CONCENTRATIONS
EDS TECHNOLOGY
("Fmax" for Adult Cancer Risks)

CAS No.	COPC Name	Cs mg/kg	Pr_ag mg/kg	Pr_f mg/kg	Pr_s mg/kg	Pag mg/kg	Pr_bg mg/kg	Pf mg/kg
117-81-7	Bis(2-ethylhexyl)-phthalate							
75-15-0	Carbon Disulfide	2.91E-15	6.03E-15	6.03E-15	6.03E-15	1.96E-14	3.67E-15	1.36E-12
64-17-5	Ethanol	1.13E-10	6.30E-09	6.30E-09	6.30E-09	5.16E-08	1.76E-08	5.16E-08
505-60-2	H	1.81E-15	2.83E-15	2.83E-15	2.83E-15	1.01E-12	1.64E-17	9.60E-11
74-82-8	Methane	4.78E-15	4.34E-14	4.34E-14	4.34E-14	4.41E-14	5.67E-14	5.06E-14
75-09-2	Methylene Chloride							
108-88-3	Toluene	3.14E-15	3.35E-15	3.35E-15	3.35E-15	1.24E-13	2.43E-15	1.21E-11
75-01-4	Vinyl Chloride	3.23E-17	1.94E-16	1.94E-16	1.94E-16	4.08E-14	7.94E-15	4.08E-14
7487-94-7	Mercuric Chloride							
7439-97-6	Elemental Mercury							
67-64-1	Acetone	7.82E-13	6.55E-12	6.55E-12	6.55E-12	1.20E-11	5.80E-11	1.20E-11

CALCULATIONS FOR LAND BASED MEDIA CONCENTRATIONS
EDS TECHNOLOGY
("Fmax" for Adult Cancer Risks)

CAS No.	COPC Name	Ps mg/kg	Pr_g mg/kg	Abeef mg/kg	Amilk mg/kg	Apork mg/kg	Aegg mg/kg	Achicken mg/kg
117-81-7	Bis(2-ethylhexyl)-phthalate							
75-15-0	Carbon Disulfide	6.83E-13	6.03E-15	5.36E-14	1.71E-14	4.64E-15	2.10E-18	3.67E-18
64-17-5	Ethanol	2.90E-08	6.30E-09	1.39E-11	4.54E-12	1.95E-12	1.40E-14	2.45E-14
505-60-2	H	4.79E-11	2.83E-15	5.09E-12	1.62E-12	4.29E-13	1.35E-18	2.36E-18
74-82-8	Methane	4.55E-14	4.34E-14	3.44E-16			8.79E-20	1.76E-19
75-09-2	Methylene Chloride							
108-88-3	Toluene	6.06E-12	3.35E-15	9.36E-13	2.99E-13	7.91E-14	2.40E-18	4.19E-18
75-01-4	Vinyl Chloride	2.05E-14	1.94E-16	4.32E-16	1.38E-16	3.74E-17	1.75E-20	3.07E-20
7487-94-7	Mercuric Chloride							
7439-97-6	Elemental Mercury							
67-64-1	Acetone	9.28E-12	6.55E-12	3.79E-15	1.30E-15	1.21E-15	1.60E-17	2.80E-17

COPC INTAKE AND CANCER RISK ESTIMATES
EDS TECHNOLOGY
(Adult Resident)

CAS No.	COPC Name	Isoil mg/kg/day	Iproduce mg/kg/day	Idw mg/kg/day	I_oral mg/kg/day	I_inh mg/kg/day	Cancer soil	Cancer produce	Cancer drinking water	Cancer oral	Cancer inhalation
117-81-7	Bis(2-ethylhexyl)-phthalate										
75-15-0	Carbon Disulfide	2.22E-19	3.26E-16	1.31E-12	1.31E-12	4.63E-10					
64-17-5	Ethanol	8.53E-15	4.39E-10	5.37E-10	9.76E-10	1.93E-09					
505-60-2	H	1.38E-19	1.58E-16	6.08E-13	6.08E-13	2.15E-11	4.4E-19	5.0E-16	1.9E-12	1.9E-12	3.0E-10
74-82-8	Methane	3.64E-19	2.58E-15	8.84E-11	8.84E-11	1.15E-06					
75-09-2	Methylene Chloride										
108-88-3	Toluene	2.39E-19	1.85E-16	1.96E-13	1.96E-13	2.67E-10					
75-01-4	Vinyl Chloride	2.46E-21	6.89E-17	4.01E-14	4.01E-14	8.89E-11	7.3E-22	2.0E-17	1.2E-14	1.2E-14	1.3E-12
7487-94-7	Mercuric Chloride										
7439-97-6	Elemental Mercury										
67-64-1	Acetone	5.95E-17	7.58E-13	2.81E-11	2.89E-11	9.64E-10					
TOTAL		**N/A**	**N/A**	**N/A**	**N/A**	**N/A**	**4.36E-19**	**5.19E-16**	**1.94E-12**	**1.94E-12**	**3.03E-10**

COPC INTAKE AND CANCER RISK ESTIMATES
EDS TECHNOLOGY
(Child Resident)

CAS No.	COPC Name	Isoil mg/kg/day	Iproduce mg/kg/day	Idw mg/kg/day	I_oral mg/kg/day	I_inh mg/kg/day	Cancer soil	Cancer produce	Cancer drinking water	Cancer oral	Cancer inhalation
117-81-7	Bis(2-ethylhexyl)-phthalate										
75-15-0	Carbon Disulfide	2.07E-18	7.75E-16	2.93E-12	2.93E-12	2.59E-10					
64-17-5	Ethanol	7.97E-14	9.68E-10	1.20E-09	2.17E-09	1.08E-09					
505-60-2	H	1.28E-18	3.84E-16	1.36E-12	1.36E-12	1.20E-11	8.13E-19	2.43E-16	8.59E-13	8.60E-13	6.03E-11
74-82-8	Methane	3.40E-18	5.95E-15	1.97E-10	1.97E-10	6.45E-07					
75-09-2	Methylene Chloride										
108-88-3	Toluene	2.23E-18	4.36E-16	4.38E-13	4.39E-13	1.49E-10					
75-01-4	Vinyl Chloride	2.30E-20	1.21E-16	8.95E-14	8.96E-14	4.96E-11	1.36E-21	7.16E-18	5.29E-15	5.30E-15	2.68E-13
7487-94-7	Mercuric Chloride										
7439-97-6	Elemental Mercury										
67-64-1	Acetone	5.56E-16	1.50E-12	6.28E-11	6.43E-11	5.38E-10					
TOTAL		**N/A**	**N/A**	**N/A**	**N/A**	**N/A**	**8.14E-19**	**2.50E-16**	**8.65E-13**	**8.65E-13**	**6.06E-11**

COPC INTAKE AND CANCER RISK ESTIMATES
EDS TECHNOLOGY
(Fisher)

CAS No.	COPC Name	Isoil mg/kg/day	Iproduce mg/kg/day	Idw mg/kg/day	Ifish mg/kg/day	I_oral mg/kg/day	I_inh mg/kg/day
117-81-7	Bis(2-ethylhexyl)-phthalate						
75-15-0	Carbon Disulfide	2.22E-19	3.26E-16	1.31E-12	4.04E-14	1.35E-12	4.63E-10
64-17-5	Ethanol	8.53E-15	4.39E-10	5.37E-10	1.99E-12	9.78E-10	1.93E-09
505-60-2	H	1.38E-19	1.58E-16	6.08E-13	4.65E-14	6.55E-13	2.15E-11
74-82-8	Methane	3.64E-19	2.58E-15	8.84E-11	6.12E-13	8.90E-11	1.15E-06
75-09-2	Methylene Chloride						
108-88-3	Toluene	2.39E-19	1.85E-16	1.96E-13	1.10E-14	2.07E-13	2.67E-10
75-01-4	Vinyl Chloride	2.46E-21	6.89E-17	4.01E-14	3.00E-16	4.04E-14	8.89E-11
7487-94-7	Mercuric Chloride						
7439-97-6	Elemental Mercury						
67-64-1	Acetone	5.95E-17	7.58E-13	2.81E-11	5.13E-13	2.94E-11	9.64E-10
TOTAL		**N/A**	**N/A**	**N/A**	**N/A**	**N/A**	**N/A**

COPC INTAKE AND CANCER RISK ESTIMATES
EDS TECHNOLOGY
(Fisher)

CAS No.	COPC Name	Cancer soil	Cancer produce	Cancer drinking water	Cancer fish	Cancer oral	Cancer inhalation
117-81-7	Bis(2-ethylhexyl)-phthalate						
75-15-0	Carbon Disulfide						
64-17-5	Ethanol						
505-60-2	H	4.35E-19	4.98E-16	1.92E-12	1.47E-13	2.07E-12	3.02E-10
74-82-8	Methane						
75-09-2	Methylene Chloride						
108-88-3	Toluene						
75-01-4	Vinyl Chloride	7.28E-22	2.04E-17	1.19E-14	8.87E-17	1.20E-14	1.34E-12
7487-94-7	Mercuric Chloride						
7439-97-6	Elemental Mercury						
67-64-1	Acetone						
TOTAL		**4.36E-19**	**5.19E-16**	**1.94E-12**	**1.47E-13**	**2.08E-12**	**3.03E-10**

COPC INTAKE AND CANCER RISK ESTIMATES
EDS TECHNOLOGY
(Fisher Child)

CAS No.	COPC Name	Isoil mg/kg/day	Iproduce mg/kg/day	Idw mg/kg/day	Ifish mg/kg/day	I_oral mg/kg/day	I_inh mg/kg/day
117-81-7	Bis(2-ethylhexyl)-phthalate						
75-15-0	Carbon Disulfide	2.07E-18	7.75E-16	2.93E-12	2.84E-14	2.96E-12	2.59E-10
64-17-5	Ethanol	7.97E-14	9.68E-10	1.20E-09	1.40E-12	2.17E-09	1.08E-09
505-60-2	H	1.28E-18	3.84E-16	1.36E-12	3.28E-14	1.39E-12	1.20E-11
74-82-8	Methane	3.40E-18	5.95E-15	1.97E-10	4.31E-13	1.98E-10	6.45E-07
75-09-2	Methylene Chloride						
108-88-3	Toluene	2.23E-18	4.36E-16	4.38E-13	7.71E-15	4.46E-13	1.49E-10
75-01-4	Vinyl Chloride	2.30E-20	1.21E-16	8.95E-14	2.11E-16	8.98E-14	4.96E-11
7487-94-7	Mercuric Chloride						
7439-97-6	Elemental Mercury						
67-64-1	Acetone	5.56E-16	1.50E-12	6.28E-11	3.61E-13	6.47E-11	5.38E-10
TOTAL		**N/A**	**N/A**	**N/A**	**N/A**	**N/A**	**N/A**

COPC INTAKE AND CANCER RISK ESTIMATES
EDS TECHNOLOGY
(Fisher Child)

CAS No.	COPC Name	Cancer soil	Cancer produce	Cancer drinking water	Cancer fish	Cancer oral	Cancer inhalation
117-81-7	Bis(2-ethylhexyl)-phthalate						
75-15-0	Carbon Disulfide						
64-17-5	Ethanol						
505-60-2	H	8.13E-19	2.43E-16	8.59E-13	2.07E-14	8.80E-13	6.03E-11
74-82-8	Methane						
75-09-2	Methylene Chloride						
108-88-3	Toluene						
75-01-4	Vinyl Chloride	1.36E-21	7.16E-18	5.29E-15	1.25E-17	5.31E-15	2.68E-13
7487-94-7	Mercuric Chloride						
7439-97-6	Elemental Mercury						
67-64-1	Acetone						
TOTAL		**8.14E-19**	**2.50E-16**	**8.65E-13**	**2.07E-14**	**8.86E-13**	**6.06E-11**

COPC INTAKE AND CANCER RISK ESTIMATES
EDS TECHNOLOGY
(Farmer)

CAS No.	COPC Name	Isoil mg/kg/day	Iproduce mg/kg/day	Idw mg/kg/day	Ibeef mg/kg/day	Imilk mg/kg/day	Ipork mg/kg/day	Iegg mg/kg/day
117-81-7	Bis(2-ethylhexyl)-phthalate							
75-15-0	Carbon Disulfide	4.16E-21	1.37E-17	1.31E-12	6.54E-17	2.34E-16	2.55E-18	1.57E-21
64-17-5	Ethanol	1.62E-16	3.13E-11	7.54E-11	1.70E-14	6.20E-14	1.07E-15	1.05E-17
505-60-2	H	2.58E-21	4.76E-16	6.08E-13	6.21E-15	2.22E-14	2.36E-16	1.01E-21
74-82-8	Methane	6.83E-21	5.81E-17	8.84E-11	4.19E-19			6.59E-23
75-09-2	Methylene Chloride							
108-88-3	Toluene	4.48E-21	6.10E-17	1.95E-13	1.14E-15	4.09E-15	4.35E-17	1.80E-21
75-01-4	Vinyl Chloride	4.61E-23	2.06E-17	4.00E-14	5.27E-19	1.89E-18	2.06E-20	1.32E-23
7487-94-7	Mercuric Chloride							
7439-97-6	Elemental Mercury							
67-64-1	Acetone	1.12E-18	1.97E-14	2.62E-11	4.62E-18	1.78E-17	6.64E-19	1.20E-20
TOTAL		**N/A**	**N/A**	**N/A**	**N/A**	**N/A**	**N/A**	**N/A**

COPC INTAKE AND CANCER RISK ESTIMATES
EDS TECHNOLOGY
(Farmer)

CAS No.	COPC Name	Ichicken mg/kg/day	I_oral mg/kg/day	I_inh mg/kg/day	Cancer soil	Cancer produce	Cancer drinking water	Cancer beef
117-81-7	Bis(2-ethylhexyl)-phthalate							
75-15-0	Carbon Disulfide	2.42E-21	1.31E-12	6.18E-10				
64-17-5	Ethanol	1.61E-17	1.07E-10	2.57E-09				
505-60-2	H	1.56E-21	6.37E-13	2.86E-11	1.09E-20	2.01E-15	2.56E-12	2.62E-14
74-82-8	Methane	1.16E-22	8.84E-11	1.54E-06				
75-09-2	Methylene Chloride							
108-88-3	Toluene	2.77E-21	2.00E-13	3.56E-10				
75-01-4	Vinyl Chloride	2.03E-23	4.01E-14	1.19E-10	1.82E-23	8.15E-18	1.58E-14	2.08E-19
7487-94-7	Mercuric Chloride							
7439-97-6	Elemental Mercury							
67-64-1	Acetone	1.85E-20	2.62E-11	1.28E-09				
TOTAL		**N/A**	**N/A**	**N/A**	**1.09E-20**	**2.02E-15**	**2.58E-12**	**2.62E-14**

COPC INTAKE AND CANCER RISK ESTIMATES
EDS TECHNOLOGY
(Farmer)

CAS No.	COPC Name	Cancer milk	Cancer pork	Cancer egg	Cancer chicken	Cancer oral	Cancer inhalation
117-81-7	Bis(2-ethylhexyl)-phthalate						
75-15-0	Carbon Disulfide						
64-17-5	Ethanol						
505-60-2	H	9.37E-14	9.96E-16	4.26E-21	6.57E-21	2.69E-12	4.02E-10
74-82-8	Methane						
75-09-2	Methylene Chloride						
108-88-3	Toluene						
75-01-4	Vinyl Chloride	7.45E-19	8.12E-21	5.19E-24	7.99E-24	1.58E-14	1.78E-12
7487-94-7	Mercuric Chloride						
7439-97-6	Elemental Mercury						
67-64-1	Acetone						
TOTAL		**9.37E-14**	**9.96E-16**	**4.27E-21**	**6.58E-21**	**2.70E-12**	**4.04E-10**

COPC INTAKE AND CANCER RISK ESTIMATES
EDS TECHNOLOGY
(Farmer Child)

CAS No.	COPC Name	Isoil mg/kg/day	Iproduce mg/kg/day	Idw mg/kg/day	Ibeef mg/kg/day	Imilk mg/kg/day	Ipork mg/kg/day	Iegg mg/kg/day
117-81-7	Bis(2-ethylhexyl)-phthalate							
75-15-0	Carbon Disulfide	2.07E-18	9.38E-16	2.93E-12	5.14E-17	5.10E-16	5.02E-18	6.04E-20
64-17-5	Ethanol	7.97E-14	1.21E-09	1.20E-09	8.62E-14	9.34E-13	2.13E-14	3.98E-16
505-60-2	H	1.28E-18	1.55E-15	1.36E-12	3.83E-15	3.69E-14	1.82E-16	3.88E-20
74-82-8	Methane	3.40E-18	7.10E-15	1.97E-10	1.21E-17			2.53E-21
75-09-2	Methylene Chloride							
108-88-3	Toluene	2.23E-18	6.56E-16	4.38E-13	7.14E-16	6.92E-15	3.67E-17	6.90E-20
75-01-4	Vinyl Chloride	2.30E-20	1.92E-16	8.95E-14	4.19E-19	4.18E-18	4.16E-20	5.05E-22
7487-94-7	Mercuric Chloride							
7439-97-6	Elemental Mercury							
67-64-1	Acetone	5.56E-16	1.81E-12	6.28E-11	8.98E-17	9.82E-16	2.41E-17	4.60E-19
TOTAL		**N/A**	**N/A**	**N/A**	**N/A**	**N/A**	**N/A**	**N/A**

COPC INTAKE AND CANCER RISK ESTIMATES
EDS TECHNOLOGY
(Farmer Child)

CAS No.	COPC Name	Ichicken mg/kg/day	I_oral mg/kg/day	I_inh mg/kg/day	Cancer soil	Cancer produce	Cancer drinking water	Cancer beef
117-81-7	Bis(2-ethylhexyl)-phthalate							
75-15-0	Carbon Disulfide	8.81E-20	2.93E-12	2.59E-10				
64-17-5	Ethanol	5.81E-16	2.41E-09	1.08E-09				
505-60-2	H	5.66E-20	1.40E-12	1.20E-11	8.13E-19	9.78E-16	8.59E-13	2.42E-15
74-82-8	Methane	4.22E-21	1.97E-10	6.45E-07				
75-09-2	Methylene Chloride							
108-88-3	Toluene	1.01E-19	4.47E-13	1.49E-10				
75-01-4	Vinyl Chloride	7.36E-22	8.97E-14	4.96E-11	1.36E-21	1.14E-17	5.29E-15	2.48E-20
7487-94-7	Mercuric Chloride							
7439-97-6	Elemental Mercury							
67-64-1	Acetone	6.71E-19	6.46E-11	5.38E-10				
TOTAL		**N/A**	**N/A**	**N/A**	**8.14E-19**	**9.90E-16**	**8.65E-13**	**2.42E-15**

COPC INTAKE AND CANCER RISK ESTIMATES
EDS TECHNOLOGY
(Farmer Child)

CAS No.	COPC Name	Cancer milk	Cancer pork	Cancer egg	Cancer chicken	Cancer oral	Cancer inhalation
117-81-7	Bis(2-ethylhexyl)-phthalate						
75-15-0	Carbon Disulfide						
64-17-5	Ethanol						
505-60-2	H	2.34E-14	1.15E-16	2.45E-20	3.58E-20	8.86E-13	6.03E-11
74-82-8	Methane						
75-09-2	Methylene Chloride						
108-88-3	Toluene						
75-01-4	Vinyl Chloride	2.47E-19	2.46E-21	2.99E-23	4.36E-23	5.31E-15	2.68E-13
7487-94-7	Mercuric Chloride						
7439-97-6	Elemental Mercury						
67-64-1	Acetone						
TOTAL		**2.34E-14**	**1.15E-16**	**2.46E-20**	**3.59E-20**	**8.92E-13**	**6.06E-11**

COPC INTAKE AND NONCANCER HAZARD ESTIMATES
EDS TECHNOLOGY
(Adult Resident)

CAS No.	COPC Name	Isoil mg/kg/day	Iproduce mg/kg/day	Idw mg/kg/day	I_oral mg/kg/day	I_inh mg/kg/day	I_teq mg/kg/day
117-81-7	Bis(2-ethylhexyl)-phthalate						
75-15-0	Carbon Disulfide	2.22E-19	3.26E-16	1.31E-12	1.31E-12	1.08E-09	
64-17-5	Ethanol	8.63E-15	4.44E-10	5.42E-10	9.86E-10	4.50E-09	
505-60-2	H	1.38E-19	1.58E-16	6.08E-13	6.08E-13	5.01E-11	
74-82-8	Methane	3.64E-19	2.58E-15	8.84E-11	8.84E-11	2.69E-06	
75-09-2	Methylene Chloride						
108-88-3	Toluene	2.39E-19	1.85E-16	1.96E-13	1.96E-13	6.23E-10	
75-01-4	Vinyl Chloride	2.46E-21	6.89E-17	4.01E-14	4.01E-14	2.07E-10	
7487-94-7	Mercuric Chloride						
7439-97-6	Elemental Mercury						
67-64-1	Acetone	5.96E-17	7.58E-13	2.81E-11	2.89E-11	2.25E-09	
TOTAL		**N/A**	**N/A**	**N/A**	**N/A**	**N/A**	**N/A**

COPC INTAKE AND NONCANCER HAZARD ESTIMATES
EDS TECHNOLOGY
(Adult Resident)

CAS No.	COPC Name	HQ_soil	HQ_produce	HQ_dw	HQ_oral	HQ_inhalation
117-81-7	Bis(2-ethylhexyl)-phthalate					
75-15-0	Carbon Disulfide	2.13E-18	3.13E-15	1.26E-11	1.26E-11	5.43E-09
64-17-5	Ethanol					
505-60-2	H	1.88E-14	2.16E-11	8.33E-08	8.33E-08	8.38E-06
74-82-8	Methane					
75-09-2	Methylene Chloride					
108-88-3	Toluene	2.86E-18	2.21E-15	2.35E-12	2.35E-12	4.38E-10
75-01-4	Vinyl Chloride	7.86E-19	2.20E-14	1.28E-11	1.28E-11	7.29E-09
7487-94-7	Mercuric Chloride					
7439-97-6	Elemental Mercury					
67-64-1	Acetone	6.35E-17	8.08E-13	3.00E-11	3.08E-11	2.51E-09
TOTAL		**1.89E-14**	**2.24E-11**	**8.34E-08**	**8.34E-08**	**8.39E-06**

COPC INTAKE AND NONCANCER HAZARD ESTIMATES
EDS TECHNOLOGY
(Child Resident)

CAS No.	COPC Name	Isoil mg/kg/day	Iproduce mg/kg/day	Idw mg/kg/day	I_oral mg/kg/day	I_inh mg/kg/day	I_teq mg/kg/day
117-81-7	Bis(2-ethylhexyl)-phthalate						
75-15-0	Carbon Disulfide	2.07E-18	7.75E-16	2.93E-12	2.93E-12	3.02E-09	
64-17-5	Ethanol	8.05E-14	9.79E-10	1.21E-09	2.19E-09	1.26E-08	
505-60-2	H	1.28E-18	3.84E-16	1.36E-12	1.36E-12	1.40E-10	
74-82-8	Methane	3.40E-18	5.95E-15	1.97E-10	1.97E-10	7.52E-06	
75-09-2	Methylene Chloride						
108-88-3	Toluene	2.23E-18	4.36E-16	4.38E-13	4.39E-13	1.74E-09	
75-01-4	Vinyl Chloride	2.30E-20	1.21E-16	8.95E-14	8.96E-14	5.79E-10	
7487-94-7	Mercuric Chloride						
7439-97-6	Elemental Mercury						
67-64-1	Acetone	5.56E-16	1.50E-12	6.28E-11	6.43E-11	6.28E-09	
TOTAL		**N/A**	**N/A**	**N/A**	**N/A**	**N/A**	**N/A**

COPC INTAKE AND NONCANCER HAZARD ESTIMATES
EDS TECHNOLOGY
(Child Resident)

CAS No.	COPC Name	HQ_soil	HQ_produce	HQ_dw	HQ_oral	HQ_inhalation
117-81-7	Bis(2-ethylhexyl)-phthalate					
75-15-0	Carbon Disulfide	1.99E-17	7.43E-15	2.81E-11	2.81E-11	5.43E-09
64-17-5	Ethanol					
505-60-2	H	1.76E-13	5.26E-11	1.86E-07	1.86E-07	8.38E-06
74-82-8	Methane					
75-09-2	Methylene Chloride					
108-88-3	Toluene	2.67E-17	5.23E-15	5.25E-12	5.26E-12	4.38E-10
75-01-4	Vinyl Chloride	7.34E-18	3.87E-14	2.86E-11	2.86E-11	7.29E-09
7487-94-7	Mercuric Chloride					
7439-97-6	Elemental Mercury					
67-64-1	Acetone	5.92E-16	1.60E-12	6.69E-11	6.85E-11	2.51E-09
TOTAL		**1.77E-13**	**5.42E-11**	**1.86E-07**	**1.86E-07**	**8.39E-06**

COPC INTAKE AND NONCANCER HAZARD ESTIMATES
EDS TECHNOLOGY
(Fisher)

CAS No.	COPC Name	Isoil mg/kg/day	Iproduce mg/kg/day	Idw mg/kg/day	Ifish mg/kg/day	I_oral mg/kg/day	I_inh mg/kg/day	I_teq mg/kg/day
117-81-7	Bis(2-ethylhexyl)-phthalate							
75-15-0	Carbon Disulfide	2.22E-19	3.26E-16	1.31E-12	4.04E-14	1.35E-12	1.08E-09	
64-17-5	Ethanol	8.63E-15	4.44E-10	5.42E-10	2.01E-12	9.88E-10	4.50E-09	
505-60-2	H	1.38E-19	1.58E-16	6.08E-13	4.65E-14	6.55E-13	5.01E-11	
74-82-8	Methane	3.64E-19	2.58E-15	8.84E-11	6.12E-13	8.90E-11	2.69E-06	
75-09-2	Methylene Chloride							
108-88-3	Toluene	2.39E-19	1.85E-16	1.96E-13	1.10E-14	2.07E-13	6.23E-10	
75-01-4	Vinyl Chloride	2.46E-21	6.89E-17	4.01E-14	3.00E-16	4.04E-14	2.07E-10	
7487-94-7	Mercuric Chloride							
7439-97-6	Elemental Mercury							
67-64-1	Acetone	5.96E-17	7.58E-13	2.81E-11	5.13E-13	2.94E-11	2.25E-09	
TOTAL		**N/A**	**N/A**	**N/A**	**N/A**	**N/A**	**N/A**	**N/A**

COPC INTAKE AND NONCANCER HAZARD ESTIMATES
EDS TECHNOLOGY
(Fisher)

CAS No.	COPC Name	HQ_soil	HQ_produce	HQ_dw	HQ_fish	HQ_oral	HQ_inhalation
117-81-7	Bis(2-ethylhexyl)-phthalate						
75-15-0	Carbon Disulfide	2.13E-18	3.13E-15	1.26E-11	3.87E-13	1.30E-11	5.43E-09
64-17-5	Ethanol						
505-60-2	H	1.88E-14	2.16E-11	8.33E-08	6.37E-09	8.97E-08	8.38E-06
74-82-8	Methane						
75-09-2	Methylene Chloride						
108-88-3	Toluene	2.86E-18	2.21E-15	2.35E-12	1.31E-13	2.49E-12	4.38E-10
75-01-4	Vinyl Chloride	7.86E-19	2.20E-14	1.28E-11	9.58E-14	1.29E-11	7.29E-09
7487-94-7	Mercuric Chloride						
7439-97-6	Elemental Mercury						
67-64-1	Acetone	6.35E-17	8.08E-13	3.00E-11	5.47E-13	3.13E-11	2.51E-09
TOTAL		**1.89E-14**	**2.24E-11**	**8.34E-08**	**6.38E-09**	**8.98E-08**	**8.39E-06**

COPC INTAKE AND NONCANCER HAZARD ESTIMATES
EDS TECHNOLOGY
(Fisher Child)

CAS No.	COPC Name	Isoil mg/kg/day	Iproduce mg/kg/day	Idw mg/kg/day	Ifish mg/kg/day	I_oral mg/kg/day	I_inh mg/kg/day	I_teq mg/kg/day
117-81-7	Bis(2-ethylhexyl)-phthalate							
75-15-0	Carbon Disulfide	2.07E-18	7.75E-16	2.93E-12	2.84E-14	2.96E-12	3.02E-09	
64-17-5	Ethanol	8.05E-14	9.79E-10	1.21E-09	1.41E-12	2.19E-09	1.26E-08	
505-60-2	H	1.28E-18	3.84E-16	1.36E-12	3.28E-14	1.39E-12	1.40E-10	
74-82-8	Methane	3.40E-18	5.95E-15	1.97E-10	4.31E-13	1.98E-10	7.52E-06	
75-09-2	Methylene Chloride							
108-88-3	Toluene	2.23E-18	4.36E-16	4.38E-13	7.71E-15	4.46E-13	1.74E-09	
75-01-4	Vinyl Chloride	2.30E-20	1.21E-16	8.95E-14	2.11E-16	8.98E-14	5.79E-10	
7487-94-7	Mercuric Chloride							
7439-97-6	Elemental Mercury							
67-64-1	Acetone	5.56E-16	1.50E-12	6.28E-11	3.61E-13	6.47E-11	6.28E-09	
TOTAL		**N/A**	**N/A**	**N/A**	**N/A**	**N/A**	**N/A**	**N/A**

COPC INTAKE AND NONCANCER HAZARD ESTIMATES
EDS TECHNOLOGY
(Fisher Child)

CAS No.	COPC Name	HQ_soil	HQ_produce	HQ_dw	HQ_fish	HQ_oral	HQ_inhalation
117-81-7	Bis(2-ethylhexyl)-phthalate						
75-15-0	Carbon Disulfide	1.99E-17	7.43E-15	2.81E-11	2.73E-13	2.84E-11	5.43E-09
64-17-5	Ethanol						
505-60-2	H	1.76E-13	5.26E-11	1.86E-07	4.49E-09	1.91E-07	8.38E-06
74-82-8	Methane						
75-09-2	Methylene Chloride						
108-88-3	Toluene	2.67E-17	5.23E-15	5.25E-12	9.24E-14	5.35E-12	4.38E-10
75-01-4	Vinyl Chloride	7.34E-18	3.87E-14	2.86E-11	6.74E-14	2.87E-11	7.29E-09
7487-94-7	Mercuric Chloride						
7439-97-6	Elemental Mercury						
67-64-1	Acetone	5.92E-16	1.60E-12	6.69E-11	3.85E-13	6.89E-11	2.51E-09
TOTAL		**1.77E-13**	**5.42E-11**	**1.86E-07**	**4.49E-09**	**1.91E-07**	**8.39E-06**

COPC INTAKE AND NONCANCER HAZARD ESTIMATES
EDS TECHNOLOGY
(Farmer)

CAS No.	COPC Name	Isoil mg/kg/day	Iproduce mg/kg/day	Idw mg/kg/day	Ibeef mg/kg/day	Imilk mg/kg/day	Ipork mg/kg/day	Iegg mg/kg/day
117-81-7	Bis(2-ethylhexyl)-phthalate							
75-15-0	Carbon Disulfide	2.22E-19	3.97E-16	1.31E-12	8.36E-17	3.07E-16	6.57E-18	8.39E-20
64-17-5	Ethanol	8.63E-15	5.54E-10	5.42E-10	1.42E-13	5.69E-13	2.82E-14	5.59E-16
505-60-2	H	1.38E-19	6.41E-16	6.08E-13	6.22E-15	2.23E-14	2.39E-16	5.39E-20
74-82-8	Methane	3.64E-19	3.08E-15	8.84E-11	1.98E-17			3.52E-21
75-09-2	Methylene Chloride							
108-88-3	Toluene	2.39E-19	2.78E-16	1.96E-13	1.16E-15	4.17E-15	4.80E-17	9.59E-20
75-01-4	Vinyl Chloride	2.46E-21	1.03E-16	4.01E-14	6.82E-19	2.52E-18	5.45E-20	7.01E-22
7487-94-7	Mercuric Chloride							
7439-97-6	Elemental Mercury							
67-64-1	Acetone	5.96E-17	9.16E-13	2.81E-11	1.46E-16	5.92E-16	3.16E-17	6.39E-19
TOTAL		**N/A**	**N/A**	**N/A**	**N/A**	**N/A**	**N/A**	**N/A**

COPC INTAKE AND NONCANCER HAZARD ESTIMATES
EDS TECHNOLOGY
(Farmer)

CAS No.	COPC Name	Ichicken mg/kg/day	I_oral mg/kg/day	I_inh mg/kg/day	I_teq mg/kg/day	HQ_soil	HQ_produce	HQ_dw
117-81-7	Bis(2-ethylhexyl)-phthalate							
75-15-0	Carbon Disulfide	1.29E-19	1.31E-12	1.08E-09		2.13E-18	3.80E-15	1.26E-11
64-17-5	Ethanol	8.61E-16	1.10E-09	4.50E-09				
505-60-2	H	8.31E-20	6.37E-13	5.01E-11		1.88E-14	8.78E-11	8.33E-08
74-82-8	Methane	6.19E-21	8.84E-11	2.69E-06				
75-09-2	Methylene Chloride							
108-88-3	Toluene	1.48E-19	2.02E-13	6.23E-10		2.86E-18	3.33E-15	2.35E-12
75-01-4	Vinyl Chloride	1.08E-21	4.02E-14	2.07E-10		7.86E-19	3.28E-14	1.28E-11
7487-94-7	Mercuric Chloride							
7439-97-6	Elemental Mercury							
67-64-1	Acetone	9.84E-19	2.90E-11	2.25E-09		6.35E-17	9.76E-13	3.00E-11
TOTAL		**N/A**	**N/A**	**N/A**	**N/A**	**1.89E-14**	**8.88E-11**	**8.34E-08**

COPC INTAKE AND NONCANCER HAZARD ESTIMATES
EDS TECHNOLOGY
(Farmer)

CAS No.	COPC Name	HQ_beef	HQ_milk	HQ_pork	HQ_egg	HQ_chicken	HQ_oral	HQ_inhalation
117-81-7	Bis(2-ethylhexyl)-phthalate							
75-15-0	Carbon Disulfide	8.01E-16	2.95E-15	6.30E-17	8.04E-19	1.24E-18	1.26E-11	5.43E-09
64-17-5	Ethanol							
505-60-2	H	8.53E-10	3.05E-09	3.27E-11	7.38E-15	1.14E-14	8.73E-08	8.38E-06
74-82-8	Methane							
75-09-2	Methylene Chloride							
108-88-3	Toluene	1.39E-14	5.00E-14	5.76E-16	1.15E-18	1.77E-18	2.42E-12	4.38E-10
75-01-4	Vinyl Chloride	2.18E-16	8.04E-16	1.74E-17	2.24E-19	3.45E-19	1.28E-11	7.29E-09
7487-94-7	Mercuric Chloride							
7439-97-6	Elemental Mercury							
67-64-1	Acetone	1.56E-16	6.31E-16	3.37E-17	6.81E-19	1.05E-18	3.09E-11	2.51E-09
TOTAL		**8.53E-10**	**3.05E-09**	**3.27E-11**	**7.38E-15**	**1.14E-14**	**8.74E-08**	**8.39E-06**

COPC INTAKE AND NONCANCER HAZARD ESTIMATES
EDS TECHNOLOGY
(Farmer Child)

CAS No.	COPC Name	Isoil mg/kg/day	Iproduce mg/kg/day	Idw mg/kg/day	Ibeef mg/kg/day	Imilk mg/kg/day	Ipork mg/kg/day	Iegg mg/kg/day
117-81-7	Bis(2-ethylhexyl)-phthalate							
75-15-0	Carbon Disulfide	2.07E-18	9.38E-16	2.93E-12	5.14E-17	5.10E-16	5.02E-18	6.04E-20
64-17-5	Ethanol	8.05E-14	1.22E-09	1.21E-09	8.70E-14	9.44E-13	2.16E-14	4.03E-16
505-60-2	H	1.28E-18	1.55E-15	1.36E-12	3.83E-15	3.69E-14	1.82E-16	3.88E-20
74-82-8	Methane	3.40E-18	7.10E-15	1.97E-10	1.21E-17			2.53E-21
75-09-2	Methylene Chloride							
108-88-3	Toluene	2.23E-18	6.56E-16	4.38E-13	7.14E-16	6.92E-15	3.67E-17	6.90E-20
75-01-4	Vinyl Chloride	2.30E-20	1.92E-16	8.95E-14	4.19E-19	4.18E-18	4.16E-20	5.05E-22
7487-94-7	Mercuric Chloride							
7439-97-6	Elemental Mercury							
67-64-1	Acetone	5.56E-16	1.82E-12	6.28E-11	8.98E-17	9.82E-16	2.42E-17	4.60E-19
TOTAL		**N/A**	**N/A**	**N/A**	**N/A**	**N/A**	**N/A**	**N/A**

COPC INTAKE AND NONCANCER HAZARD ESTIMATES
EDS TECHNOLOGY
(Farmer Child)

CAS No.	COPC Name	Ichicken mg/kg/day	I_oral mg/kg/day	I_inh mg/kg/day	I_teq mg/kg/day	HQ_soil	HQ_produce	HQ_dw
117-81-7	Bis(2-ethylhexyl)-phthalate							
75-15-0	Carbon Disulfide	8.81E-20	2.93E-12	3.02E-09		1.99E-17	9.00E-15	2.81E-11
64-17-5	Ethanol	5.87E-16	2.43E-09	1.26E-08				
505-60-2	H	5.66E-20	1.40E-12	1.40E-10		1.76E-13	2.12E-10	1.86E-07
74-82-8	Methane	4.22E-21	1.97E-10	7.52E-06				
75-09-2	Methylene Chloride							
108-88-3	Toluene	1.01E-19	4.47E-13	1.74E-09		2.67E-17	7.86E-15	5.25E-12
75-01-4	Vinyl Chloride	7.36E-22	8.97E-14	5.79E-10		7.34E-18	6.15E-14	2.86E-11
7487-94-7	Mercuric Chloride							
7439-97-6	Elemental Mercury							
67-64-1	Acetone	6.71E-19	6.46E-11	6.28E-09		5.92E-16	1.93E-12	6.69E-11
TOTAL		**N/A**	**N/A**	**N/A**	**N/A**	**1.77E-13**	**2.14E-10**	**1.86E-07**

COPC INTAKE AND NONCANCER HAZARD ESTIMATES
EDS TECHNOLOGY
(Farmer Child)

CAS No.	COPC Name	HQ_beef	HQ_milk	HQ_pork	HQ_egg	HQ_chicken	HQ_oral	HQ_inhalation
117-81-7	Bis(2-ethylhexyl)-phthalate							
75-15-0	Carbon Disulfide	4.93E-16	4.89E-15	4.81E-17	5.79E-19	8.45E-19	2.81E-11	5.43E-09
64-17-5	Ethanol							
505-60-2	H	5.24E-10	5.06E-09	2.50E-11	5.31E-15	7.76E-15	1.92E-07	8.38E-06
74-82-8	Methane							
75-09-2	Methylene Chloride							
108-88-3	Toluene	8.56E-15	8.29E-14	4.40E-16	8.27E-19	1.21E-18	5.35E-12	4.38E-10
75-01-4	Vinyl Chloride	1.34E-16	1.33E-15	1.33E-17	1.61E-19	2.35E-19	2.87E-11	7.29E-09
7487-94-7	Mercuric Chloride							
7439-97-6	Elemental Mercury							
67-64-1	Acetone	9.57E-17	1.05E-15	2.57E-17	4.90E-19	7.15E-19	6.89E-11	2.51E-09
TOTAL		**5.24E-10**	**5.06E-09**	**2.50E-11**	**5.32E-15**	**7.76E-15**	**1.92E-07**	**8.39E-06**

NONCANCER HAZARD ESTIMATES FOR ACUTE INHALATION EXPOSURE
EDS TECHNOLOGY

CAS No.	COPC Name	Cacute µg/m^3	AHQ_inh
117-81-7	Bis(2-ethylhexyl)-phthalate		
75-15-0	Carbon Disulfide	4.79E-03	7.73E-07
64-17-5	Ethanol	2.00E-02	
505-60-2	H	2.24E-04	3.45E-06
74-82-8	Methane	1.21E+01	6.05E-06
75-09-2	Methylene Chloride		
108-88-3	Toluene	2.80E-03	7.57E-08
75-01-4	Vinyl Chloride	9.31E-04	5.17E-09
7487-94-7	Mercuric Chloride		
7439-97-6	Elemental Mercury		
67-64-1	Acetone	1.01E-02	2.12E-08
TOTAL		**N/A**	**1.04E-05**

SUMMARY OF ESTIMATED
CANCER RISKS AND NONCANCER HAZARDS
EDS TECHNOLOGY

Exposure Scenario	Scenario Location	Cancer Risk (Benchmark = 1E-05)			Total Hazard Index (Benchmark = 0.25)		
		Oral	Inhalation	Total	Oral	Inhalation	Total
Adult Resident	Rmax	1.94E-12	3.03E-10	3.05E-10	0.00000008	0.00000839	0.00000848
Child Resident	Rmax	8.65E-13	6.06E-11	6.15E-11	0.00000019	0.00000839	0.00000858
Fisher	Rmax	2.08E-12	3.03E-10	3.05E-10	0.00000009	0.00000839	0.00000848
Fisher Child	Rmax	8.86E-13	6.06E-11	6.15E-11	0.00000019	0.00000839	0.00000858
Farmer	Fmax	2.70E-12	4.04E-10	4.07E-10	0.00000009	0.00000839	0.00000848
Farmer Child	Fmax	8.92E-13	6.06E-11	6.15E-11	0.00000019	0.00000839	0.00000859
Acute Exposure	Amax	--	--	--	--	0.00001038	--

SUMMARY OF ESTIMATED MAXIMUM
CANCER RISKS AND NONCANCER HAZARDS FOR INDIVIDUAL COPCS AND EXPOSURE PATHWAYS
EDS TECHNOLOGY

Exposure Scenario	Exposure Pathway	Carcinogenic Risk		Non Carcinogenic Hazard	
		Max Cancer Risk	From COPC	Max HQ	From COPC
Adult Resident	inhalation	3.02E-10	H	8.38E-06	H
	oral	1.92E-12	H	8.33E-08	H
	soil	4.35E-19	H	1.88E-14	H
	produce	4.98E-16	H	2.16E-11	H
Child Resident	inhalation	6.03E-11	H	8.38E-06	H
	oral	8.60E-13	H	1.86E-07	H
	soil	8.13E-19	H	1.76E-13	H
	produce	2.43E-16	H	5.26E-11	H
Fisher	inhalation	3.02E-10	H	8.38E-06	H
	oral	2.07E-12	H	8.97E-08	H
	soil	4.35E-19	H	1.88E-14	H
	produce	4.98E-16	H	2.16E-11	H
	fish	1.47E-13	H	6.37E-09	H
Fisher Child	inhalation	6.03E-11	H	8.38E-06	H
	oral	8.80E-13	H	1.91E-07	H
	soil	8.13E-19	H	1.76E-13	H
	produce	2.43E-16	H	5.26E-11	H
	fish	2.07E-14	H	4.49E-09	H

SUMMARY OF ESTIMATED MAXIMUM
CANCER RISKS AND NONCANCER HAZARDS FOR INDIVIDUAL COPCS AND EXPOSURE PATHWAYS
EDS TECHNOLOGY

Exposure Scenario	Exposure Pathway	Carcinogenic Risk		Non Carcinogenic Hazard	
		Max Cancer Risk	From COPC	Max HQ	From COPC
Farmer	inhalation	4.02E-10	H	8.38E-06	H
	oral	2.69E-12	H	8.73E-08	H
	soil	1.09E-20	H	1.88E-14	H
	produce	2.01E-15	H	8.78E-11	H
	beef	2.62E-14	H	8.53E-10	H
	milk	9.37E-14	H	3.05E-09	H
	pork	9.96E-16	H	3.27E-11	H
	egg	4.26E-21	H	7.38E-15	H
	chicken	6.57E-21	H	1.14E-14	H
Farmer Child	inhalation	6.03E-11	H	8.38E-06	H
	oral	8.86E-13	H	1.92E-07	H
	soil	8.13E-19	H	1.76E-13	H
	produce	9.78E-16	H	2.12E-10	H
	beef	2.42E-15	H	5.24E-10	H
	milk	2.34E-14	H	5.06E-09	H
	pork	1.15E-16	H	2.50E-11	H
	egg	2.45E-20	H	5.31E-15	H
	chicken	3.58E-20	H	7.76E-15	H
Acute Exposure	inh	NA	NA	6.05E-06	Methane

"This document has been reviewed by RWR and no OPSEC-sensitive information was found.

APPENDIX 2

TDC TECHNOLOGY

RISK ASSESSMENT CALCULATIONS

This document has been reviewed for ITAR/EAR and no ITAR/EAR sensitive information was found.

TABLE OF CONTENTS

Risk Model Parameters ……..……1
Site-Specific and Default Constants ……...……6
Exposures Scenario Specific Data ……..7
Animal Exposure Data ……8
Waterbody and Watershed Specific Data ……...…9
Air Modeling Results ……....10
Emission Rates and Inputs from Vapor Air Modeling ……11
COPC Toxicity Data ……12
Calculations for Estimating Fish and Sediment Concentrations – Lake Vega ……15
Calculations for Estimating Fish and Sediment Concentrations – Lake Vega (For Non cancer Hazards) ……17
Calculations for Estimating Fish and Sediment Concentrations – Lake Vega (For Cancer Risks) ……18
Calculations for Estimating Drinking Water and Sediment Concentrations – Kentucky River ...19
Calculations for Estimating Drinking Water and Sediment Concentrations – Kentucky River (For Non Cancer Hazards) …….....20
Calculations for Estimating Drinking Water and Sediment Concentrations – Kentucky River (For Cancer Risks) ……...21
Calculations for Estimating Drinking Water and Sediment Concentrations – Kentucky River (For Cancer Risks – Exposure Duration > 30 Years) ……...22
Calculations for Land Based Media Concentrations "RMAX" ……...…23
Calculations for Land Based Media Concentrations "RMAX" ("RMAX" for Non Cancer Hazards) ……....24
Calculations for Land Based Media Concentrations "RMAX" ("RMAX" for Cancer Risks) ….25
Calculations for Land Based Media Concentrations ("FMAX") ……26
Calculations for Land Based Media Concentrations ("FMAX" for Non Cancer Hazards) …….27
Calculations for Land Based Media Concentrations ("FMAX" for Child Cancer Risks) ……...29
Calculations for Land Based Media Concentrations ("FMAX" for Adult Cancer Risks) ……...31
COPC Intake and Cancer Risk Estimates (Adult Resident) ……..…33
COPC Intake and Cancer Risk Estimates (Child Resident) ……....34
COPC Intake and Cancer Risk Estimates (Fisher) ……...…36
COPC Intake and Cancer Risk Estimates (Child Fisher) ……..……38
COPC Intake and Cancer Risk Estimates (Farmer) ……..……40
COPC Intake and Cancer Risk Estimates (Farmer Child) ……..……...43

TABLE OF CONTENTS (continued)

PCBs, PCDDs, AND PCDFs Intake and cancer Risk Estimates As 2, 3, 7, 8 TCDD TEQ ...……46
COPC Intake and Non Cancer Hazards Estimates (Adult Resident) ……....49
COPC Intake and Non Cancer Hazards Estimates (Child Resident) ……51
COPC Intake and Non Cancer Hazards Estimates (Fisher) ……..53
COPC Intake and Non Cancer Hazards Estimates (Fisher Child) ……....55
COPC Intake and Non Cancer Hazards Estimates (Farmer) ……....57
COPC Intake and Non Cancer Hazards Estimates (Farmer Child) ……..…60
Non Cancer Hazard Estimates for Acute Inhalation Exposure …….64
PCBs, PCDDs, AND PCDFs EXPOSURE ESTIMATES As 2, 3, 7, 8 TCDD TEQ ……65
Summary of Estimated Cancer Risks and Non Cancer Hazards ……..…66
Summary of Estimated Maximum Cancer Risks and Non Cancer Hazards for Individuals COPCs and Exposure Pathways ……...67

RISK MODEL PARAMETERS
TDC TECHNOLOGY

Parameter	Units	Description	Category
BD	g soil/cm^3 soil	Soil bulk density	Constants
Bs	--	Soil bioavailability factor	Constants
Cd	--	Drag coefficient	Constants
Ev	cm/yr	Average annual evapotranspiration	Constants
I	cm/yr	Average annual irrigation	Constants
k	--	von Karman's constant	Constants
kp	1/yr	Plant surface loss coefficient	Constants
mu_a	g/cm/s	Viscosity of air	Constants
P	cm/yr	Average annual precipitation	Constants
R	atm-m^3/mol-K	Universal gas constant	Constants
rho_a	g/cm^3	Density of air	Constants
rho_soil	g/cm^3	Density of soil	Constants
rho_w	g/cm^3	Density of water	Constants
RO	cm/yr	Average annual surface runoff from pervious areas	Constants
T1	year	Time period at the beginning of combustion	Constants
Ta	K	Ambient air temperature	Constants
tD	year	Time period over which deposition occurs	Constants
theta_sw	mL/cm^3	Soil volumetric water content	Constants
Zs	cm	Soil mixing zone depth	Constants
Rp_ag	--	Interception fraction of the edible portion of above ground produce	Constants
Tp_ag	yr	Length of plant exposure to deposition per harvest of the edible portion of the ith plant group	Constants
Yp_ag	kg DW/m^2	Yield or standing crop biomass of the edible portion of the plant (productivity)	Constants
h_teq	days	Half-life of dioxin TEQ in adults	Constants
f1	--	Fraction of ingested dioxin that is stored in fat	Constants
f2	--	Fraction of mother's weight that is fat	Constants
f3	--	Fraction of mother's breast milk that is fat	Constants
f4	--	Fraction of ingested COPC that is absorbed	Constants
BW	kg	Body weight	Exposure Basis
BW_infant	kg	Body weight for infant	Exposure Basis
IR	m^3/hr	Inhalation rate	Exposure Basis
Crsoil	kg soil/day	Consumption rate of soil	Exposure Basis
Crag	kg DW plant/kg BW-day	Consumption rate of exposed aboveground produce	Exposure Basis
CRpp	kg DW plant/kg BW-day	Consumption rate of protected aboveground produce	Exposure Basis
CRbg	kg DW plant/kg BW-day	Consumption rate of belowground produce	Exposure Basis
CRdw	L water/day	Consumption rate of drinking water	Exposure Basis
Crfish	kg/kg-day	Consumption rate of fish	Exposure Basis
CRbmilk	kg/day	Ingestion rate of breast milk by the infant	Exposure Basis

RISK MODEL PARAMETERS
TDC TECHNOLOGY

Parameter	Units	Description	Category
Fsoil	--	Fraction of soil that is contaminated	Exposure Basis
Fproduce	--	Fraction of ingested produce that is contaminated (aka Fag)	Exposure Basis
Fdw	--	Fraction of drinking water that is contaminated	Exposure Basis
Ffish	--	Fraction of fish that is contaminated	Exposure Basis
ET	hours/day	Exposure time	Exposure Basis
EF	days/yr	Exposure frequency	Exposure Basis
ED	year	Exposure duration	Exposure Basis
AT_noncancer	year	Averaging time for estimating noncancer hazard	Exposure Basis
AT_cancer	year	Averaging time for estimating cancer risk	Exposure Basis
AT_nursing	year	Averaging time for estimating average daily dose for a nursing infant	Exposure Basis
eff		Exposure frequency factor (EF divided by 365 days/yr)	Exposure Basis
edf_nc	--	Exposure duration factor for noncancer hazard (ED/AT_noncancer)	Exposure Basis
edf_c	--	Exposure duration factor for cancer risk (ED/AT_cancer)	Exposure Basis
edf_nursing	--	Exposure duration factor for nursing infants	Exposure Basis
b	--	Empirical slope coefficient	Waterbody Input
AI	m^2	Impervious watershed area receiving COPC deposition	Waterbody Input
AL	m^2	Total watershed area receiving deposition	Waterbody Input
Aw	m^2	Waterbody Surface Area	Waterbody Input
C_usle	--	USLE cover management factor	Waterbody Input
CBS	g/cm^3	Bed sediment concentration	Waterbody Input
dbs	m	Depth of upper benthic sediment layer	Waterbody Input
dwc	m	Depth of water column	Waterbody Input
dz	m	Total water body depth	Waterbody Input
flipid	--	Fish lipid content	Waterbody Input
kb	1/yr	Benthic burial rate constant	Waterbody Input
K_usle	ton/acre	USLE erodibility factor	Waterbody Input
lambda_z	--	Dimensionless viscous sublayer thickness	Waterbody Input
LS_usle	--	USLE length-slope factor	Waterbody Input
mu_w	g/cm-s	Viscosity of water corresponding to water temperature	Waterbody Input
OCsed	--	Fraction of organic carbon in bottom sediment	Waterbody Input
PF_usle	--	USLE supporting practice factor	Waterbody Input
RF_usle	1/yr	USLE rainfall (or erosivity factor)	Waterbody Input
SD	--	Sediment delivery ratio (watershed)	Waterbody Input
theta	--	Temperature correction factor	Waterbody Input
theta_bs	--	Bed sediment concentration	Waterbody Input
TSS	mg/L	Total suspended solids concentration	Waterbody Input
Twk	K	Water body temperature	Waterbody Input
u	m/s	Current velocity	Waterbody Input
Vfx	m^3/yr	Average volumetric flow rate through water body	Waterbody Input

RISK MODEL PARAMETERS
TDC TECHNOLOGY

Parameter	Units	Description	Category
W	m/s	Average annual wind speed	Waterbody Input
Xe	kg/m^2-yr	Unit Soil loss	Waterbody Input
Cyv	µg-s/g-m^3	Unitized vapor phase air concentration (yearly average)	Air Model
Cyp	µg-s/g-m^3	Unitized particle phase air concentration (yearly average)	Air Model
Cypb	µg-s/g-m^3	Unitized particle-bound phase air concentration (yearly average)	Air Model
Dytv(Vdv)	s/m^2-yr	Unitized vapor phase total deposition (yearly average) as a function of the dry vapor deposition velocity	Air Model
Dytp	s/m^2-yr	Unitized particle phase total deposition (yearly average)	Air Model
Dytpb	s/m^2-yr	Unitized particle-bound phase total deposition (yearly average)	Air Model
Dydp	s/m^2-yr	Unitized particle phase dry deposition (yearly average)	Air Model
Dydpb	s/m^2-yr	Unitized particle-bound phase dry deposition (yearly average)	Air Model
Dywp	s/m^2-yr	Unitized particle phase wet deposition (yearly average)	Air Model
Dywpb	s/m^2-yr	Unitized particle-bound phase wet deposition (yearly average)	Air Model
Chv	µg-s/g-m^3	Unitized vapor phase air concentration (hourly maximum)	Air Model
Chp	µg-s/g-m^3	Unitized particle phase air concentration (hourly maximum)	Air Model
Chpb	µg-s/g-m^3	Unitized particle-bound phase air concentration (hourly maximum)	Air Model
Q	g/s	COPC emission rate impacting risk assessment area (chronic)	COPC Data
Qa	g/s	COPC emission rate impacting risk assessment area (acute)	COPC Data
kse	1/yr	COPC loss constant due to soil erosion	COPC Data
ksr	1/yr	COPC loss constant due to runoff	COPC Data
ksl	1/yr	COPC loss constant due to leaching	COPC Data
ksv	1/yr	COPC loss constant due to volatilization	COPC Data
ks	1/yr	COPC soil loss constant due to all processes	COPC Data
RfDo	mg/kg/day	Oral reference dose	COPC Data
RfC	mg/m^3	Reference concentration	COPC Data
CSFo	1/(mg/kg/day)	Oral cancer slope factor	COPC Data
URFi	1/(µg/m^3)	Inhalation unit risk factor	COPC Data
AIEC	mg/m^3	Acute inhalation exposure criterion	COPC Data
BAF	L/kg FW	Bioaccumulation factor for COPC in fish	COPC Data
BCFfish	L/kg FW	Bioconcentration factor for COPC in fish	COPC Data
BSAFfish	(mg/kg)/(mg/kg)	Biota-sediment accumulation factor	COPC Data
Brag	--	Plant-soil bioconcentration factor for given plant-type	COPC Data
Brroot	--	Plant-soil bioconcentration factor for given plant-type	COPC Data
Bvag	(mg/kg)/(mg/kg)	COPC air-to-plant biotransfer factor for given plant-type	COPC Data
Babeef	day/kg	Biotransfer factor-beef	COPC Data
Baeggs	day/kg	Biotransfer factor-eggs	COPC Data
Bamilk	day/kg	Biotransfer factor-milk	COPC Data
Bapork	day/kg	Biotransfer factor-pork	COPC Data
Bapoult	day/kg	Biotransfer factor-poultry	COPC Data

RISK MODEL PARAMETERS
TDC TECHNOLOGY

Parameter	Units	Description	Category
BCFegg	(mg/kg)/(mg/kg)	Biococentration factor-eggs	COPC Data
BCFpoult	(mg/kg)/(mg/kg)	Biococentration factor-poultry	COPC Data
Brf/s	unitless	Plant-soil bioconcentration factor for forage/silage	COPC Data
Bvforage	(mg/kg)/mg/kg)	COPC air-to-plant biotransfer factor-forage	COPC Data
Brgrain	unitless	Plant-soil biocontration factor for grain	COPC Data
Da	cm^2/s	Diffusivity of COPC in air	COPC Data
Dw	cm^2/s	Diffusivity of COPC in water	COPC Data
Fv	--	Fraction of COPC in vapor phase	COPC Data
H	atm·m^3/mol	Henry's Law constant	COPC Data
Kdbs	cm^3 water/g bed sediment	Bed sediment/sediment pore-water partition coefficient	COPC Data
Kds	cm^3 water/g soil	Soil-water partition coefficient	COPC Data
Kdsw	L water/kg suspended sediment	Suspended sediments/ surface water partition coefficient	COPC Data
Kow	--	Octanol-water partition coefficient	COPC Data
ksg	1/yr	COPC soil loss constant due to biotic and abiotic degradation	COPC Data
TEF	--	Toxicity equivalency factor	COPC Data
Fw	--	Fraction of COPC wet deposition that adheres to plant surfaces	COPC Data
ER	--	Soil enrichment ratio	COPC Data
Vdv	cm/s	Dry deposition velocity	COPC Data
Ds	mg COPC/kg soil/yr	Deposition term	Water Fate & Transport
Cstd	mg COPC/kg soil	Soil concentration at time tD	Water Fate & Transport
LDEP	g/yr	Total (wet and dry) particle phase and wet vapor phase COPC direct deposition load to water body	Water Fate & Transport
KG	m/yr	Gas phase transfer coefficient	Water Fate & Transport
KL	m/yr	Liquid phase transfer coefficient	Water Fate & Transport
Kv_overall	m/yr	Overall COPC transfer rate coefficient	Water Fate & Transport
Ldif	g/yr	Vapor phase COPC diffusion (dry deposition) load to water body	Water Fate & Transport
LRI	g/yr	Runoff load from impervious surfaces	Water Fate & Transport
fwc	--	Fraction of total water body COPC concentration in the water column	Water Fate & Transport
fbs	--	Fraction of total water body COPC concentration in benthic sediment	Water Fate & Transport
kv	1/yr	Water column volatilization rate constant	Water Fate & Transport
kwt	1/yr	Overall total water body COPC dissipation rate constant	Water Fate & Transport
Cs	mg COPC/kg DW soil	For cancer risk Cs is the average soil concentration over the exposure period. For noncancer health hazards Cs is equivalent to CstD.	Water Fate & Transport
LR	g/yr	Runoff load from pervious surfaces	Water Fate & Transport
LE	g/yr	Soil erosion load	Water Fate & Transport
LT	g/yr	Total COPC load to the water body (including deposition, runoff, and erosion)	Water Fate & Transport
Cwtot	g COPC/m^3 water body	Total water body COPC concentration (including water column and bed sediment)	Water Fate & Transport

RISK MODEL PARAMETERS
TDC TECHNOLOGY

Parameter	Units	Description	Category
Cwctot	mg COPC/L water column	Total COPC concentration in water column	Water Fate & Transport
Cdw	mg COPC/L water	Dissolved phase water concentration	Water Fate & Transport
Csb	mg COPC/kg sediment	COPC concentration sorbed to bed sediment	Water Fate & Transport
Cfish	mg COPC/kg FW tissue	Concentration of COPC in fish	Water Fate & Transport
Ca	µg/m^3	Air concentration	Land Fate & Transport
VGag	--	Empirical correction factor for reducing edible plant mater concentration. VG_ag and VG_bg are COPC-specific	Land Fate & Transport
Pd_ag	mg COPC/kg DW	Concentration of COPC in aboveground unprotected plants due to direct deposition	Land Fate & Transport
Pv_ag	mg COPC/kg WW	Concentration of COPC in aboveground produce due to air-to-plant transfer	Land Fate & Transport
Pr_ag	mg COPC/kg DW	Concentration of COPC in aboveground produce due to root uptake	Land Fate & Transport
Pr_bg	mg COPC/kg DW	Concentration of COPC in belowground produce due to root uptake	Land Fate & Transport
Pag	mg COPC/kg DW	Concentration of COPC in consumed potion of aboveground produce	Land Fate & Transport
Isoil	mg COPC/kg Bw-day	Daily intake of COPC from soil	Intake, Risk & Hazard
Iproduce	mg COPC/kg Bw-day	Daily intake of COPC from produce	Intake, Risk & Hazard
Ifish	mg COPC/kg Bw-day	Daily intake of COPC from fish	Intake, Risk & Hazard
Idw	mg COPC/kg Bw-day	Daily intake of COPC from drinking water	Intake, Risk & Hazard
I_oral	mg COPC/kg BW-day	Total intake via oral ingestion of contaminated media	Intake, Risk & Hazard
I_inh	mg COPC/kg BW-day	Intake of COPC intake via inhalation	Intake, Risk & Hazard
I_teq	mg COPC/kg BW-day	Daily intake of PCDDs, PCDFs, and PCBs as 2,3,7,8 TCDD TEQ	Intake, Risk & Hazard
Cbmilk	pg COPC/kg milk fat	COPC Concentration in milk fat of breast milk	Intake, Risk & Hazard
I_bmilk	pg COPC/kg BW infant/day	Intake of 2,3,7,8 TCDD TEQ for nursing infant (based on exposure scenario for the infant's mother)	Intake, Risk & Hazard
HQsoil	--	Hazard quotient	Intake, Risk & Hazard
HQproduce	--	Hazard quotient	Intake, Risk & Hazard
HQdw	--	Hazard quotient	Intake, Risk & Hazard
HQfish	--	Hazard quotient	Intake, Risk & Hazard
HQinh	--	Hazard quotient	Intake, Risk & Hazard
Cancer_oral	--	Individual lifetime cancer risk through oral exposure to COPC	Intake, Risk & Hazard
Cancer_inh	--	Individual lifetime cancer risk through inhalation exposure to COPC	Intake, Risk & Hazard
Cacute	µg/m^3	Acute air concentration	Intake, Risk & Hazard
AHQ_inh	--	Acute hazard quotient for inhalation of COPCs	Intake, Risk & Hazard

SITE-SPECIFIC AND DEFAULT CONSTANTS
TDC TECHNOLOGY

Parameter	Units	Value
BD	g/cm^3	1.5
Cd	--	0.0011
Ev	cm/yr	76.2
I	cm/yr	13.9
k	--	0.4
kp	1/yr	18
mu_a	g/cm/s	1.81E-04
P	cm/yr	113
R	atm-m^3/mol-K	8.205E-05
rho_a	g/cm^3	0.00120
rho_soil	g/cm^3	2.7
rho_w	g/cm^3	1.00
RO	cm/yr	45.72
T1	year	0
Ta	K	298
tD	yr	0.7346
theta_sw	mL/cm^3	0.2
Zs	cm	2
Rp_ag	--	0.39
Tp_ag	yr	0.16
Yp_ag	kg/m^2	2.24
Rp_f	--	0.5
Tp_f	yr	0.12
Yp_f	kg/m^2	0.24
Rp_s	--	0.46
Tp_s	yr	0.16
Yp_s	kg/m^2	0.8
VGf	--	1.0
VGs	--	0.5
MF_behp	--	0.01
h_teq	days	2,555
f1	--	0.90
f2	--	0.30
f3	--	0.04
f4	--	0.90

EXPOSURE SCENARIO SPECIFIC DATA
TDC TECHNOLOGY

Parameter	Units	Adult Resident	Child Resident	Subsistence Fisher	Subsistence Fisher Child	Farmer	Farmer Child
Scenario ID	--	**AR**	**CR**	**SF**	**SFC**	**F**	**FC**
BW	kg	70	15	70	15	70	15
IR	m^3/hr	0.83	0.497	0.83	0.497	0.83	0.497
CRsoil	kg/day	0.0001	0.0002	0.0001	0.0002	0.0001	0.0002
CRag	kg /kg/day	0.00032	0.00077	0.00032	0.00077	0.00047	0.00113
CRpp	kg /kg/day	0.00061	0.00150	0.00061	0.00150	0.00064	0.00157
CRbg	kg /kg/day	0.00014	0.00023	0.00014	0.00023	0.00017	0.00028
CRdw	L/day	1.4	0.67	1.4	0.67	1.4	0.67
CRfish	kg/kg/day			1.25E-03	8.80E-04		
CRbeef						0.00122	0.00075
CRmilk						0.01367	0.02268
CRpork						0.00055	0.00042
CRegg						0.00075	0.00054
CRchicken						0.00066	0.00045
Fsoil	--	1	1	1	1	1	1
Fproduce	--	1	1	1	1	1	1
Fdw	--	1	1	1	1	1	1
Ffish	--	0	0	1	1		
Fbeef						1	1
Fmilk						1	1
Fpork						1	1
Feggs						1	1
Fchicken						1	1
ET	hr/day	24	24	24	24	24	24
EF	day/yr	350	350	350	350	350	350
ED	yr	30	6	30	6	40	6
AT_noncancer	yr	30	6	30	6	40	6
AT_cancer	yr	70	70	70	70	70	70
eff	--	0.959	0.959	0.959	0.959	0.959	0.959
edf_nc	--	1	1	1	1	1	1
edf_c	--	0.4286	0.0857	0.4286	0.0857	0.5714	0.0857
Exposure to Receptor's Nursing Infant							
BW_infant	kg	9.4		9.4		9.4	
CRbmilk	kg/day	0.688		0.688		0.688	
edf_nursing	--	1		1		1	

ANIMAL EXPOSURE DATA
TDC TECHNOLOGY

Parameter	Units	Cow (beef)	Cow (dairy)	Pig (pork)	Chicken (egg)	Chicken
F_f	--	1	1	0	0	0
F_s		1	1	1	0	0
F_g		1	1	1	1	1
Qp_f	kg/day	8.8	13.2	0	0	0
Qp_s	kg/day	2.5	4.1	1.4	0	0
Qp_g	kg/day	0.47	3	3.3	0.2	0.2
Qs	kg/day	0.5	0.4	0.37	0.022	0.022

WATERBODY AND WATERSHED SPECIFIC DATA
TDC TECHNOLOGY

Parameter	Units	Waterbody 1	Source	Waterbody 2	Source
Name	--	Lake Vega		Upper Kentucky River	
Waterbody_type	--	Lake		River	
b	--	0.125		0.125	
AI	m^2	1.00E+06	(1)	1.00E+07	(1)
AL	m^2	1.00E+08	(1)	6.00E+08	(1)
Aw	m^2	5.46E+05	(2)	2.00E+06	(1)
C_usle	--	0.1		0.1	
CBS	g/cm^3	1		1	
dbs	m	0.03		0.03	
dwc	m	4.16	(2)	1.6	(1)
dz	m	4.19		1.63	
flipid	--	0.07		0.07	
kb	1/yr	0		1.00	
K_usle	ton/acre	0.39		0.39	
lambda_z	--	4		4	
LS_usle	--	1.5		1.5	
mu_w	g/cm-s	0.0169		0.0169	
OCsed	--	0.04		0.04	
PF_usle	--	1		1	
RF_usle	1/yr	200	(1)	200	(1)
SD	--	0.120		0.048	
theta	--	1.026		1.026	
theta_bs	--	0.6		0.6	
TSS	mg/L	10		10	
Twk	K	298		298	
u	m/s	0	(1)	0.49	(1)
Vfx	m^3/yr	4.00E+09	(1)	4.00E+08	(1)
W	m/s	3.78	(3)	3.78	(3)
Xe	kg/m^2-yr	2.62		2.62	

Aermod receptor on waterbody closest to stacks:

UTM N	m	745250		754650
UTM E	m	4176200		4184800

(1) OBOD Risk Assessment, Table D-6-3

(2) Howlett, David, *Blue Grass Army Depot to Improve Its Dam* , The Joint Ammunition Community's Bullet'n, Vol. 2, Issue 3, March 2007.

(3) 5-year average from meteorological data files

AIR MODELING RESULTS
TDC TECHNOLOGY

Parameter	Units	Rmax	Fmax	Waterbody1	Watershed	Amax	Waterbody2
Cyp	µg-s/g-m^3	0.249	0.249				
Cypb	µg-s/g-m^3	0.249	0.249				
Dytp	s/m^2-yr	0.00119	0.00119	0.000624	0.00119		0.00017
Dytpb	s/m^2-yr	0.00119	0.00119	0.000624	0.00119		0.00017
Dydp	s/m^2-yr	0.00118	0.00118				
Dydpb	s/m^2-yr	0.00118	0.00118				
Dywp	s/m^2-yr	0.00001	0.00001				
Dywpb	s/m^2-yr	0.00001	0.00001				
Chp	µg-s/g-m^3					95.400	
Chpb	µg-s/g-m^3					95.400	

Rmax: Maximum air modeling output data from residential exposure scenario locations
Fmax: Maximum air modeling output data from farmer exposure scenario locations
Waterbody: Maximum air modeling output data from receptor grid node locations over water.
Watershed: Maximum air modeling output data from receptor grid node locations over land.
Amax: Maximum air modeling output data from receptor grid node locations over land.

EMISSION RATES AND INPUTS FROM VAPOR AIR MODELING
TDC TECHNOLOGY

		TDC	TDC	TDC	TDC	TDC	TDC	TDC
CAS No.	**COPC Name**	**Q**	**Chv**	**Chv*Q**	**Cyv**	**Dytv**	**Cyv*Q**	**Dytv*Q**
123-91-1	1,4-dioxane	3.03E-04	9.54E+01	2.89E-02	2.49E-01	4.60E-04	7.54E-05	1.39E-07
78-93-3	2-butanone	5.80E-04	9.55E+01	5.54E-02	2.50E-01	8.00E-05	1.45E-04	4.64E-08
67-64-1	acetone	8.32E-03	9.55E+01	7.94E-01	2.50E-01	8.00E-05	2.08E-03	6.66E-07
71-43-2	benzene	2.47E-04	9.55E+01	2.36E-02	2.50E-01	3.00E-05	6.17E-05	7.41E-09
117-81-7	bis(2-ethylhexyl)-phthalate	1.11E-04	9.53E+01	1.06E-02	2.45E-01	3.24E-03	2.72E-05	3.60E-07
74-87-3	chloromethane	6.31E-05	9.55E+01	6.03E-03	2.50E-01	2.00E-05	1.58E-05	1.26E-09
75-71-8	dichlorodifluoromethane	7.31E-05	9.55E+01	6.98E-03	2.50E-01	2.00E-05	1.83E-05	1.46E-09
84-74-2	di-n-butyl phthalate	8.07E-06	9.53E+01	7.69E-04	2.44E-01	4.03E-03	1.97E-06	3.25E-08
117-84-0	di-n-octyl phthalate	1.11E-04	9.55E+01	1.06E-02	2.50E-01	6.00E-05	2.77E-05	6.66E-09
74-84-0	ethane	9.58E-02	9.55E+01	9.15E+00	2.50E-01	3.00E-05	2.39E-02	2.87E-06
505-60-2	H	5.66E-05	9.55E+01	5.40E-03	2.50E-01	1.10E-04	1.41E-05	6.23E-09
74-82-8	methane	4.04E-02	9.55E+01	3.86E+00	2.50E-01	3.00E-05	1.01E-02	1.21E-06
91-20-3	naphthalene	1.11E-04	9.54E+01	1.06E-02	2.48E-01	9.50E-04	2.76E-05	1.05E-07
108-88-3	toluene	1.39E-03	9.55E+01	1.33E-01	2.50E-01	3.00E-05	3.47E-04	4.17E-08
75-69-4	trichlorofluoromethane	3.28E-05	9.55E+01	3.13E-03	2.50E-01	3.00E-05	8.19E-06	9.84E-10
35822-46-9	1,2,3,4,6,7,8-HpCDD	3.71E-11	9.52E+01	3.53E-09	2.39E-01	1.79E-02	8.87E-12	6.66E-13
3268-87-9	1,2,3,4,6,7,8,9-OCDD	2.27E-10	9.52E+01	2.16E-08	2.40E-01	1.67E-02	5.44E-11	3.80E-12
67562-39-4	1,2,3,4,6,7,8-HpCDF	2.16E-11	9.52E+01	2.06E-09	2.42E-01	1.06E-02	5.22E-12	2.28E-13
39001-02-0	1,2,3,4,6,7,8,9-OCDF	7.36E-11	9.52E+01	7.01E-09	2.39E-01	1.78E-02	1.76E-11	1.31E-12
7664-41-7	ammonia	2.52E-05	9.55E+01	2.41E-03	2.50E-01	2.00E-05	6.29E-06	5.04E-10
7782-50-5	chlorine	3.03E-04	9.55E+01	2.89E-02	2.48E-01	1.86E-03	7.51E-05	5.64E-07
7647-01-0	hydrogen chloride	1.01E-03	9.51E+01	9.61E-02	2.24E-01	7.68E-02	2.26E-04	7.76E-05
7487-94-7	mercuric chloride	3.28E-06	9.52E+01	3.12E-04	2.37E-01	2.74E-02	7.78E-07	8.98E-08
7439-97-6	elemental mercury	3.28E-06	9.55E+01	3.13E-04	2.50E-01	1.00E-05	8.19E-07	3.28E-11

COPC TOXICITY DATA
TDC TECHNOLOGY

CAS No.	COPC Name	COPC Group	Q'	Q	Qa	kse	ksr	ksl	ksv	ks	VGag	VGbg	Fw	ER	Vdv
			g/s	g/s	g/s	1/yr	1/yr	1/yr	1/yr	1/yr	--	--	--	--	cm/s
123-91-1	1,4-dioxane	Organic	1.00E+00	3.03E-04	3.03E-04		106.326	11.6906	5,776	5,895	1.00	1.00	0.600	3.00	0.50
78-93-3	2-butanone	Organic	1.00E+00	5.80E-04	5.80E-04		36.000	3.9582	820	896	1.00	1.00	0.600	3.00	0.50
67-64-1	acetone	Organic	1.00E+00	8.32E-03	8.32E-03		69.168	7.6051	2,921	2,997.713	1.00	1.00	0.600	3.00	0.50
71-43-2	benzene	Organic	1.00E+00	2.47E-04	2.47E-04		60.1579	6.61444	215,789.4	215,872.0	0.01	0.01	0.600	3.00	0.50
117-81-7	bis(2-ethylhexyl)-phthalate	Organic	1.00E+00	1.11E-04	1.11E-04		0.000	0.0000	0	11	0.01	0.01	0.600	3.00	0.50
74-87-3	chloromethane	Organic	1.00E+00	6.31E-05	6.31E-05		78.8276	8.66720	973,259	973,356	1.00	1.00	0.600	3.00	0.50
75-71-8	dichlorodifluoromethane	Organic	1.00E+00	7.31E-05	7.31E-05		20.230	2.2243	29,070	2.91E+04	0.01	0.01	0.600	3.00	0.50
84-74-2	di-n-butyl phthalate	Organic	1.00E+00	8.07E-06	8.07E-06		0.00	0.000	0	11	0.01	0.01	0.600	3.00	0.50
117-84-0	di-n-octyl phthalate	Organic	1.00E+00	1.11E-04	1.11E-04		0.000	0.0000	0	9.03E+00	0.01	0.01	0.600	3.00	0.50
74-84-0	ethane	Organic	1.00E+00	9.58E-02	9.58E-02		33.62	3.696	16,092,250	16,092,287	0.01	0.01	0.600	3.00	0.50
505-60-2	H	Organic	1.00E+00	5.66E-05	5.66E-05		6.162	0.6775	44	2.34E+04	0.01	0.01	0.600	3.00	0.50
74-82-8	methane	Organic	1.00E+00	4.04E-02	4.04E-02		69.17	7.605	118,827,923	118,828,000	1.00	1.00	0.600	3.00	0.50
91-20-3	naphthalene	Organic	1.00E+00	1.11E-04	1.11E-04		0.051	0.0056	5	1.03E+01	0.01	0.01	0.600	3.00	0.50
108-88-3	toluene	Organic	1.00E+00	1.39E-03	1.39E-03		30.89	3.397	83,811	83,857	0.01	0.01	0.600	3.00	0.50
75-69-4	trichlorofluoromethane	Organic	1.00E+00	3.28E-05	3.28E-05		40.821	4.4884	1,847,653	1.85E+06	0.01	0.01	0.600	3.00	0.50
35822-46-9	1,2,3,4,6,7,8-HpCDD	PCDDs, PCDFs, PCBs	1.00E+00	3.71E-11	3.71E-11		0.00	0.000	0	0	0.01	0.01	0.600	3.00	0.50
3268-87-9	1,2,3,4,6,7,8,9-OCDD	PCDDs, PCDFs, PCBs	1.00E+00	2.27E-10	2.27E-10		0.000	0.0000	0	3.00E-02	0.01	0.01	0.600	3.00	0.50
67562-39-4	1,2,3,4,6,7,8-HpCDF	PCDDs, PCDFs, PCBs	1.00E+00	2.16E-11	2.16E-11		0.00	0.000	0	0	0.01	0.01	0.600	3.00	0.50
39001-02-0	1,2,3,4,6,7,8,9-OCDF	PCDDs, PCDFs, PCBs	1.00E+00	7.36E-11	7.36E-11		0.000	0.0000	0	3.00E-02	0.01	0.01	0.600	3.00	0.50
7664-41-7	ammonia	Inorganic	1.00E+00	2.52E-05	2.52E-05		101.37	11.146	17,745	17,857	1.00	1.00	0.600	3.00	0.50
7782-50-5	chlorine	Inorganic	1.00E+00	3.03E-04	3.03E-04		114.300	12.5674		1.27E+02	1.00	1.00	0.600	3.00	0.50
7647-01-0	hydrogen chloride	Inorganic	1.00E+00	1.01E-03	1.01E-03		114.30	12.567		127	1.00	1.00	0.600	3.00	0.50
7487-94-7	mercuric chloride	Inorganic	1.00E+00	3.28E-06	3.28E-06		0.000	0.0000	0	2.92E-04	1.00	1.00	0.600	1.00	0.50
7439-97-6	elemental mercury	Inorganic	1.00E+00	3.28E-06	3.28E-06		0.015	0.0017	4	4.08E+00	1.00	1.00	0.600	1.00	0.50

COPC TOXICITY DATA
TDC TECHNOLOGY

CAS No.	COPC Name	AIEC	TEF	URFi	CSFo	RfC	RfDo	BAF	BCFfish	BSAFfish	Brag	Brroot	Bvag	Babeef	Bamilk	Bapork
		mg/m^3	--	1/(µg/m^3)	1/(mg/kg/day)	mg/m^3	mg/kg/day	L/kg	L/kg	--	--	--	--	day/kg	day/kg	day/kg
123-91-1	1,4-dioxane	3.00E+00		7.71E-06	1.10E-02	3.01E+00	1.00E-01		3.2		8.3800	1,187.0000	0	0.00003	5.57E-06	0
78-93-3	2-butanone	1.30E+01				5.00E+00	6.00E-01		3		8.38000	23.10000	0	0.00010	2.21E-05	0
67-64-1	acetone	4.75E+02				3.15E+00	9.00E-01		3		8.3800	74.2000	0	2.86E-05	6.02E-06	0
71-43-2	benzene	1.30E+00		7.71E-06	5.50E-02	3.00E-02	4.00E-03		8.26E+00		2.37000	80.10000	0	0.00338	7.12E-04	0
117-81-7	bis(2-ethylhexyl)-phthalate	1.00E+01		2.40E-06	1.40E-02		2.00E-02	194	53		0.044	0.0009	150,975	3.99E-02	8.40E-03	4.83E-02
74-87-3	chloromethane	2.00E+02				9.00E-02	2.60E-02		3.16E+00		8.3800	119.00000	0	4.08E-04	8.59E-05	0
75-71-8	dichlorodifluoromethane	1.50E+04				1.00E-01	2.00E-01		9.2		2.19000	17.40000	0	0.00370	0.00078	0
84-74-2	di-n-butyl phthalate	1.00E+01					1.00E-01	1,805	8.30E+02		0.0740	0.1860	3,145	0.03638	0.00766	0.044
117-84-0	di-n-octyl phthalate							462	32.9		0.00081	0.03080	353,045	0.00777	0.00164	0
74-84-0	ethane	3.50E+03							4.94E+00		3.4800	4.8579	0	0.00214	0.00045	0.003
505-60-2	H	6.50E-02		4.00E-03	7.70E+00	2.10E-05	7.00E-06		14.3		1.57000	0.90946	1	0.00528	0.00111	0
74-82-8	methane								1.38E+00		9.0800	11.8658		0.00059		
91-20-3	naphthalene			3.43E-05		3.01E-03	2.00E-02		69.3		0.47900	0.26900	0	0.01485	0.00313	0
108-88-3	toluene	3.70E+01				5.00E+00	8.00E-02		2.39E+01		1.0700	77.4000	0	0.00769	0.00162	0.009
75-69-4	trichlorofluoromethane	5.00E+03				7.00E-01	3.00E-01		16.8		1.39000	81.40000	0	0.00596	0.00125	0
35822-46-9	1,2,3,4,6,7,8-HpCDD	5.00E-01	1.00E-02						2.75E+03	0	0.0009	0.5450	910,000	0.00877	0.00185	0.011
3268-87-9	1,2,3,4,6,7,8,9-OCDD	1.00E-02	3.00E-04						1,465.0	0	0.00071	0.49000	2,360,000	0.00685	0.00144	0
67562-39-4	1,2,3,4,6,7,8-HpCDF	1.50E-01	1.00E-02						1.83E+04	0	0.0021	0.7480	830,000	0.01643	0.00346	0.020
39001-02-0	1,2,3,4,6,7,8,9-OCDF	7.50E-03	3.00E-04						2,754.0	0	0.00092	0.77600	2,280,000	0.00877	0.00185	0
7664-41-7	ammonia	3.20E+00				1.00E-01			3.16E+00		28.5141	50.7678		0.00009	0.00002	0.000
7782-50-5	chlorine	2.10E-01				1.45E-04	1.00E-01		3.2		8.38000			0.00036	0.00008	0
7647-01-0	hydrogen chloride	2.10E+00				2.00E-02			3.16E+00					0.00005	0.00001	0.000
7487-94-7	mercuric chloride	4.00E+00				3.00E-05	3.00E-04				0.01450	0.03600	1,800	0.00522	0.00226	0
7439-97-6	elemental mercury	6.00E-04				3.00E-04										

COPC TOXICITY DATA
TDC TECHNOLOGY

CAS No.	COPC Name	Baeggs	Bapoult	Brf/s	Bvforage	Brgrain	Da	Dw	Fv	H	Kdbs	Kds	Kdsw	Kow	ksg
		day/kg	day/kg	--	--	--	cm^2/s	cm^2/s	--	atm·m^3/mol	cm^3/g	cm^3/g	L/kg	--	1/yr
123-91-1	1,4-dioxane	0	0	8.380	0	8.3800	0.2290	1.02E-05		0.00000	0.0	0.0	0.0	5.37E-01	1
78-93-3	2-butanone	0	0	8.3800	0	8.38000	0.0808	9.80E-06	1.00000	0.000	0.1	0.3	0.1	1.95E+00	36
67-64-1	acetone	0	0	8.380	0	8.3800	0.1240	1.14E-05	1.00000	0.000	0.0	0.1	0.0	5.75E-01	0
71-43-2	benzene	0	0	2.3700	0	2.37000	0.0880	1.02E-05	1.00000	0.0056	2	0	5	1.26E+02	16
117-81-7	bis(2-ethylhexyl)-phthalate	0.01679	0.029	0.044	150,975	0.0437	0.0351	3.66E-06	0.13100	0.0000	4,440.0	2,300,000.0	8,325.0	1.26E+05	11
74-87-3	chloromethane	0	0	8.3800	0	8.38000	0.1260	6.50E-06	1.00000	0.0088	0	0	0	8.13E+00	9
75-71-8	dichlorodifluoromethane	0	0	2.1900	0	2.19000	0.0010	1.00E-05	1.00000	0.3430	2.5	0.6	4.6	1.45E+02	1
84-74-2	di-n-butyl phthalate	0.02	0.03	0.0744	3,145	0.07440	0.0438	7.86E-06	1	0.00000	6.28E+01	5.20E+03	1.18E+02	5.01E+04	11
117-84-0	di-n-octyl phthalate	0	0	0.0008	353,045	0.00081	0.0010	1.00E-05	0.85200	0.0001	3,669,779.7	13,000,000.0	6,880,836.9	1.26E+08	9
74-84-0	ethane	0.00	0.00	3.4800	0	3.48000	0.1960	2.28E-05	1	0.50000	1.30E+00	3.20E-01	2.44E+00	6.31E+01	
505-60-2	H	0	0	1.5700	1	1.57000	0.0650	7.50E-06	1.00000	0.0000	9.3	2.3	17.6	2.51E+02	23,349
74-82-8	methane	0.00	0.00	9.0800		9.08000	0.2990	3.46E-05	1	0.65800	3.50E-01	8.70E-02	6.60E-01	1.26E+01	
91-20-3	naphthalene	0	0	0.4790	0	0.47900	0.0590	7.50E-06	1.00000	0.0005	47.6	300.0	89.3	2.00E+03	5
108-88-3	toluene	0.00	0.01	1.0700	0	1.07000	0.0870	8.60E-06	1	0.00660	5.60E+00	3.60E-01	1.05E+01	5.01E+02	12
75-69-4	trichlorofluoromethane	0	0	1.3900	0	1.39000	0.0870	9.70E-06	1.00000	0.0970	4.6	0.2	8.6	3.16E+02	1
35822-46-9	1,2,3,4,6,7,8-HpCDD	0.00	0.01	0.0009	910,000	0.00092	0.0905	8.00E-06	0	0.00001	2.47E+06	6.17E+05	4.62E+06	1.00E+08	0
3268-87-9	1,2,3,4,6,7,8,9-OCDD	0	0	0.0007	2,360,000	0.00071	0.0869	8.00E-06	0.00200	0.0000	3,908,948.9	977,237.2	7,329,279.2	1.58E+08	0
67562-39-4	1,2,3,4,6,7,8-HpCDF	0.01	0.01	0.0021	830,000	0.00205	0.0203	8.00E-06	0	0.00001	6.20E+05	1.55E+05	1.16E+06	2.51E+07	0
39001-02-0	1,2,3,4,6,7,8,9-OCDF	0	0	0.0009	2,280,000	0.00092	0.0195	8.00E-06	0.00200	0.0000	2,466,380.0	616,595.0	4,624,462.5	1.00E+08	0
7664-41-7	ammonia	0.00	0.00	28.5141		28.51412	0.2870	3.33E-05	1	0.00002	7.29E-02	1.70E-02	1.30E-01	1.58E+00	
7782-50-5	chlorine	0	0	8.3800		8.38000	0.0010	1.00E-05	1.00000	0.0117				7.08E+00	
7647-01-0	hydrogen chloride	0.00	0.00				0.0010	1.00E-05	1	0.00236				1.00E+00	
7487-94-7	mercuric chloride	0	0		1,800	0.00930	0.0453	5.25E-06	0.85000	0.0000	50,000.0	58,000.0	100,000.0	6.10E-01	
7439-97-6	elemental mercury						0.0109	3.01E-05	1.00000	0.0071	3,000.0	1,000.0	1,000.0	4.17E+00	

CALCULATIONS FOR ESTIMATING FISH AND SEDIMENT CONCENTRATIONS - LAKE VEGA
TDC TECHNOLOGY

CAS No.	COPC Name	Ds	CstD	LDEP	KG	KL	Kv_overall
		mg/kg/yr	mg/kg	g/yr	m/yr	m/yr	m/yr
123-91-1	1,4-dioxane	1.20E-05	2.04E-09	1.03E-01	966,842	176	104
78-93-3	2-butanone	1.55E-06	1.73E-09	2.53E-02	481,095	172	169
67-64-1	acetone	2.22E-05	7.40E-09	3.64E-01	641,000	190	182
71-43-2	benzene	2.47E-07	1.14E-12	4.05E-03	509,412	176	200
117-81-7	bis(2-ethylhexyl)-phthalate	5.40E-06	4.89E-07	5.86E-02	275,183	89	1
74-87-3	chloromethane	4.21E-08	4.32E-14	6.89E-04	647,909	130	148
75-71-8	dichlorodifluoromethane	4.87E-08	1.68E-12	7.99E-04	25,367	174	198
84-74-2	di-n-butyl phthalate	1.08E-06	9.81E-08	1.77E-02	319,193	148	23
117-84-0	di-n-octyl phthalate	8.41E-07	9.30E-08	8.70E-03	25,367	174	56
74-84-0	ethane	9.58E-05	5.95E-12	1.57E+00	871,118	302	344
505-60-2	H	2.08E-07	8.87E-12	3.40E-03	415,832	144	127
74-82-8	methane	4.04E-05	3.40E-13	6.62E-01	1,156,020	400	455
91-20-3	naphthalene	3.52E-06	3.42E-07	5.76E-02	389,705	144	160
108-88-3	toluene	1.39E-06	1.66E-11	2.28E-02	505,526	157	179
75-69-4	trichlorofluoromethane	3.28E-08	1.78E-14	5.38E-04	505,526	171	194
35822-46-9	1,2,3,4,6,7,8-HpCDD	1.47E-12	1.07E-12	1.26E-08	519,020	150	107
3268-87-9	1,2,3,4,6,7,8,9-OCDD	9.00E-12	6.54E-12	7.74E-08	505,285	150	82
67562-39-4	1,2,3,4,6,7,8-HpCDF	8.57E-13	6.22E-13	7.36E-09	190,788	150	72
39001-02-0	1,2,3,4,6,7,8,9-OCDF	2.92E-12	2.12E-12	2.51E-08	185,552	150	15
7664-41-7	ammonia	1.68E-08	9.41E-13	2.75E-04	1,124,833	390	311
7782-50-5	chlorine	1.88E-05	1.48E-07	3.08E-01	25,367	174	195
7647-01-0	hydrogen chloride	2.59E-03	2.04E-05	4.24E+01	25,367	174	185
7487-94-7	mercuric chloride	2.56E-06	1.88E-06	4.19E-02	326,537	113	0
7439-97-6	elemental mercury	1.09E-09	2.54E-10	1.79E-05	125,702	364	410

CALCULATIONS FOR ESTIMATING FISH AND SEDIMENT CONCENTRATIONS - LAKE VEGA
TDC TECHNOLOGY

CAS No.	COPC Name	Ldif g/yr	LRI g/yr	fwc	fbs	kv 1/yr	kwt 1/yr
123-91-1	1,4-dioxane	0.00E+00	3.61E-01	0.996	0.004	2.48E+01	2.47E+01
78-93-3	2-butanone	5.83E+00	4.64E-02	0.995	0.005	4.03E+01	4.01E+01
67-64-1	acetone	1.30E+02	6.66E-01	0.996	0.004	4.35E+01	4.33E+01
71-43-2	benzene	2.95E-02	7.41E-03	0.978	0.022	4.78E+01	4.68E+01
117-81-7	bis(2-ethylhexyl)-phthalate	6.01E-01	1.62E-01	0.033	0.967	2.79E-01	9.11E-03
74-87-3	chloromethane	3.54E-03	1.26E-03	0.994	0.006	3.54E+01	3.52E+01
75-71-8	dichlorodifluoromethane	1.41E-04	1.46E-03	0.978	0.022	4.72E+01	4.62E+01
84-74-2	di-n-butyl phthalate	3.35E-01	3.24E-02	0.686	0.314	5.50E+00	3.78E+00
117-84-0	di-n-octyl phthalate	2.66E-01	2.52E-02	0.003	0.997	1.93E-01	5.08E-04
74-84-0	ethane	2.20E-01	2.87E+00	0.986	0.014	8.21E+01	8.10E+01
505-60-2	H	8.01E-01	6.23E-03	0.933	0.067	3.04E+01	2.84E+01
74-82-8	methane	9.31E-02	1.21E+00	0.993	0.007	1.09E+02	1.08E+02
91-20-3	naphthalene	1.23E-01	1.05E-01	0.742	0.258	3.82E+01	2.84E+01
108-88-3	toluene	1.26E-01	4.17E-02	0.957	0.043	4.27E+01	4.08E+01
75-69-4	trichlorofluoromethane	2.19E-04	9.84E-04	0.964	0.036	4.63E+01	4.46E+01
35822-46-9	1,2,3,4,6,7,8-HpCDD	0.00E+00	4.41E-08	0.003	0.997	5.42E-01	1.44E-03
3268-87-9	1,2,3,4,6,7,8,9-OCDD	0.00E+00	2.70E-07	0.003	0.997	2.64E-01	6.94E-04
67562-39-4	1,2,3,4,6,7,8-HpCDF	0.00E+00	2.57E-08	0.003	0.997	1.37E+00	3.84E-03
39001-02-0	1,2,3,4,6,7,8,9-OCDF	0.00E+00	8.76E-08	0.003	0.997	7.49E-02	1.98E-04
7664-41-7	ammonia	1.31E+00	5.04E-04	0.995	0.005	7.43E+01	7.40E+01
7782-50-5	chlorine	1.67E-02	5.64E-01	0.996	0.004	4.66E+01	4.64E+01
7647-01-0	hydrogen chloride	2.36E-01	7.76E+01	0.996	0.004	4.41E+01	4.39E+01
7487-94-7	mercuric chloride	1.34E-01	7.69E-02	0.006	0.994	1.29E-03	7.10E-06
7439-97-6	elemental mercury	6.32E-04	3.28E-05	0.045	0.955	9.70E+01	4.32E+00

CALCULATIONS FOR ESTIMATING FISH AND SEDIMENT CONCENTRATIONS - LAKE VEGA
TDC TECHNOLOGY
(for Noncancer Hazards)

CAS No.	COPC Name	Cs	LR	LE	LT	Cwtot	Cwctot	Cdw	Csb	Cfish
		mg/kg	g/yr	g/yr	g/yr	g/m^3	mg/L	mg/L	mg/kg	mg/kg
123-91-1	1,4-dioxane	2.04E-09	6.44E-01	1.33E-05	1.11E+00	2.74E-10	2.75E-10	2.75E-10	5.50E-12	8.69E-10
78-93-3	2-butanone	1.73E-09	1.85E-01	1.11E-04	6.09E+00	1.50E-09	1.50E-09	1.50E-09	1.20E-10	4.74E-09
67-64-1	acetone	7.40E-09	1.52E+00	2.73E-04	1.32E+02	3.24E-08	3.25E-08	3.25E-08	6.49E-10	1.03E-07
71-43-2	benzene	1.14E-12	2.04E-04	5.07E-08	4.11E-02	1.02E-11	1.01E-11	1.01E-11	2.49E-11	8.33E-11
117-81-7	bis(2-ethylhexyl)-phthalate	4.89E-07	9.62E-06	4.57E-02	8.67E-01	6.63E-09	2.18E-10	2.02E-10	8.95E-07	3.92E-08
74-87-3	chloromethane	4.32E-14	1.01E-05	1.25E-09	5.50E-03	1.36E-12	1.36E-12	1.36E-12	3.39E-13	4.29E-12
75-71-8	dichlorodifluoromethane	1.68E-12	1.01E-04	1.29E-07	2.50E-03	6.23E-13	6.13E-13	6.13E-13	1.51E-12	5.64E-12
84-74-2	di-n-butyl phthalate	9.81E-08	8.54E-04	9.17E-03	3.95E-01	1.43E-10	9.92E-11	9.91E-11	6.22E-09	1.79E-07
117-84-0	di-n-octyl phthalate	9.30E-08	3.24E-07	8.69E-03	3.08E-01	2.93E-08	7.77E-11	1.11E-12	4.08E-06	5.14E-10
74-84-0	ethane	5.95E-12	5.94E-04	3.93E-07	4.66E+00	1.13E-09	1.12E-09	1.12E-09	1.46E-09	5.54E-09
505-60-2	H	8.87E-12	1.62E-04	7.84E-07	8.11E-01	2.14E-10	2.01E-10	2.01E-10	1.87E-09	2.87E-09
74-82-8	methane	3.40E-13	6.98E-05	1.25E-08	1.97E+00	4.66E-10	4.66E-10	4.66E-10	1.63E-10	6.44E-10
91-20-3	naphthalene	3.42E-07	5.15E-02	3.19E-02	3.69E-01	1.22E-10	9.10E-11	9.10E-11	4.33E-09	6.30E-09
108-88-3	toluene	1.66E-11	1.52E-03	1.13E-06	1.92E-01	4.88E-11	4.71E-11	4.71E-11	2.64E-10	1.13E-09
75-69-4	trichlorofluoromethane	1.78E-14	2.15E-06	1.07E-09	1.74E-03	4.40E-13	4.27E-13	4.27E-13	1.95E-12	7.18E-12
35822-46-9	1,2,3,4,6,7,8-HpCDD	1.07E-12	7.85E-11	9.99E-08	1.57E-07	1.48E-14	3.95E-17	8.36E-19	2.06E-12	1.80E-14
3268-87-9	1,2,3,4,6,7,8,9-OCDD	6.54E-12	3.03E-10	6.12E-07	9.59E-07	9.13E-14	2.42E-16	3.25E-18	1.27E-11	2.22E-15
67562-39-4	1,2,3,4,6,7,8-HpCDF	6.22E-13	1.82E-10	5.82E-08	9.14E-08	8.12E-15	2.30E-17	1.82E-18	1.13E-12	9.89E-15
39001-02-0	1,2,3,4,6,7,8,9-OCDF	2.12E-12	1.56E-10	1.98E-07	3.11E-07	2.94E-14	7.83E-17	1.66E-18	4.09E-12	7.16E-16
7664-41-7	ammonia	9.41E-13	2.83E-04	9.94E-09	1.31E+00	3.15E-10	3.16E-10	3.16E-10	2.30E-11	1.00E-09
7782-50-5	chlorine	1.48E-07	5.03E+01	0.00E+00	5.12E+01	1.25E-08	1.25E-08	1.25E-08	0.00E+00	3.96E-08
7647-01-0	hydrogen chloride	2.04E-05	6.92E+03	0.00E+00	7.04E+03	1.72E-06	1.73E-06	1.73E-06	0.00E+00	5.46E-06
7487-94-7	mercuric chloride	1.88E-06	1.47E-03	5.87E-02	3.13E-01	1.42E-08	7.88E-11	3.94E-11	1.97E-06	0.00E+00
7439-97-6	elemental mercury	2.54E-10	1.15E-05	7.93E-06	7.02E-04	3.73E-12	1.67E-13	1.66E-13	4.98E-10	0.00E+00

CALCULATIONS FOR ESTIMATING FISH AND SEDIMENT CONCENTRATIONS - LAKE VEGA
TDC TECHNOLOGY
(for Cancer Risks)

CAS No.	COPC Name	Cs	LR	LE	LT	Cwtot	Cwctot	Cdw	Csb	Cfish
		mg/kg	g/yr	g/yr	g/yr	g/m^3	mg/L	mg/L	mg/kg	mg/kg
123-91-1	1,4-dioxane	2.04E-09	6.44E-01	1.33E-05	1.11E+00	2.74E-10	2.75E-10	2.75E-10	5.50E-12	8.69E-10
78-93-3	2-butanone	1.72E-09	1.84E-01	1.10E-04	6.09E+00	1.50E-09	1.50E-09	1.50E-09	1.20E-10	4.74E-09
67-64-1	acetone	7.40E-09	1.52E+00	2.73E-04	1.32E+02	3.24E-08	3.25E-08	3.25E-08	6.49E-10	1.03E-07
71-43-2	benzene	1.14E-12	2.04E-04	5.07E-08	4.11E-02	1.02E-11	1.01E-11	1.01E-11	2.49E-11	8.33E-11
117-81-7	bis(2-ethylhexyl)-phthalate	4.29E-07	8.43E-06	4.01E-02	8.62E-01	6.59E-09	2.17E-10	2.00E-10	8.89E-07	3.89E-08
74-87-3	chloromethane	4.32E-14	1.01E-05	1.25E-09	5.50E-03	1.36E-12	1.36E-12	1.36E-12	3.39E-13	4.29E-12
75-71-8	dichlorodifluoromethane	1.67E-12	1.01E-04	1.29E-07	2.50E-03	6.23E-13	6.13E-13	6.13E-13	1.51E-12	5.64E-12
84-74-2	di-n-butyl phthalate	8.60E-08	7.48E-04	8.04E-03	3.94E-01	1.43E-10	9.89E-11	9.88E-11	6.20E-09	1.78E-07
117-84-0	di-n-octyl phthalate	7.91E-08	2.75E-07	7.39E-03	3.07E-01	2.92E-08	7.73E-11	1.11E-12	4.07E-06	5.12E-10
74-84-0	ethane	5.95E-12	5.94E-04	3.93E-07	4.66E+00	1.13E-09	1.12E-09	1.12E-09	1.46E-09	5.54E-09
505-60-2	H	8.87E-12	1.62E-04	7.84E-07	8.11E-01	2.14E-10	2.01E-10	2.01E-10	1.87E-09	2.87E-09
74-82-8	methane	3.40E-13	6.98E-05	1.25E-08	1.97E+00	4.66E-10	4.66E-10	4.66E-10	1.63E-10	6.44E-10
91-20-3	naphthalene	2.97E-07	4.47E-02	2.77E-02	3.58E-01	1.18E-10	8.83E-11	8.82E-11	4.20E-09	6.12E-09
108-88-3	toluene	1.66E-11	1.52E-03	1.13E-06	1.92E-01	4.88E-11	4.71E-11	4.71E-11	2.64E-10	1.13E-09
75-69-4	trichlorofluoromethane	1.78E-14	2.15E-06	1.07E-09	1.74E-03	4.40E-13	4.27E-13	4.27E-13	1.95E-12	7.18E-12
35822-46-9	1,2,3,4,6,7,8-HpCDD	5.37E-13	3.94E-11	5.02E-08	1.07E-07	1.01E-14	2.69E-17	5.70E-19	1.41E-12	1.23E-14
3268-87-9	1,2,3,4,6,7,8,9-OCDD	3.28E-12	1.52E-10	3.07E-07	6.55E-07	6.23E-14	1.65E-16	2.22E-18	8.67E-12	1.52E-15
67562-39-4	1,2,3,4,6,7,8-HpCDF	3.12E-13	9.13E-11	2.92E-08	6.24E-08	5.54E-15	1.57E-17	1.24E-18	7.70E-13	6.74E-15
39001-02-0	1,2,3,4,6,7,8,9-OCDF	1.06E-12	7.81E-11	9.95E-08	2.12E-07	2.00E-14	5.34E-17	1.13E-18	2.79E-12	4.88E-16
7664-41-7	ammonia	9.41E-13	2.83E-04	9.94E-09	1.31E+00	3.15E-10	3.16E-10	3.16E-10	2.30E-11	1.00E-09
7782-50-5	chlorine	1.46E-07	4.97E+01	0.00E+00	5.06E+01	1.24E-08	1.24E-08	1.24E-08	0.00E+00	3.92E-08
7647-01-0	hydrogen chloride	2.02E-05	6.84E+03	0.00E+00	6.96E+03	1.71E-06	1.71E-06	1.71E-06	0.00E+00	5.40E-06
7487-94-7	mercuric chloride	9.42E-07	7.35E-04	2.93E-02	2.83E-01	1.28E-08	7.13E-11	3.56E-11	1.78E-06	0.00E+00
7439-97-6	elemental mercury	1.83E-10	8.28E-06	5.70E-06	6.97E-04	3.70E-12	1.66E-13	1.65E-13	4.94E-10	0.00E+00

CALCULATIONS FOR ESTIMATING DRINKING WATER AND SEDIMENT CONCENTRATIONS - KENTUCKY RIVER
TDC TECHNOLOGY

CAS No.	COPC Name	Ds	CstD	LDEP	KG	KL	Kv_overall	Ldif	LRI	fwc	fbs	kv	kwt
		mg/kg/yr	mg/kg	g/yr	m/yr	m/yr	m/yr	g/yr	g/yr			1/yr	1/yr
123-91-1	1,4-dioxane	1.20E-05	2.04E-09	1.03E-01	36,500	552	8		3.61E+00	0.989	0.011	4.9	4.9
78-93-3	2-butanone	1.55E-06	1.73E-09	9.28E-02	36,500	541	82	1.04E+01	4.64E-01	0.987	0.013	50.5	49.9
67-64-1	acetone	2.22E-05	7.40E-09	1.33E+00	36,500	584	60	1.57E+02	6.66E+00	0.989	0.011	36.9	36.5
71-43-2	benzene	2.47E-07	1.14E-12	1.48E-02	36,500	552	589	3.17E-01	7.41E-02	0.9456	0.054	361.3	341.7
117-81-7	bis(2-ethylhexyl)-phthalate	5.40E-06	4.89E-07	1.27E-01	36,500	331	0	2.95E-01	1.62E+00	0.013	0.987	0.1	1.0
74-87-3	chloromethane	4.21E-08	4.32E-14	2.52E-03	36,500	441	485	4.24E-02	1.26E-02	0.9843	0.016	297.5	292.9
75-71-8	dichlorodifluoromethane	4.87E-08	1.68E-12	2.92E-03	36,500	547	621	1.62E-03	1.46E-02	0.946	0.054	381.0	360.3
84-74-2	di-n-butyl phthalate	1.08E-06	9.81E-08	6.47E-02	36,500	485	3	1.62E-01	3.24E-01	0.457	0.5428	1.9	1.4
117-84-0	di-n-octyl phthalate	8.41E-07	9.30E-08	1.69E-02	36,500	547	96	1.66E+00	2.52E-01	0.001	0.999	0.8	1.0
74-84-0	ethane	9.58E-05	5.95E-12	5.75E+00	36,500	826	938	2.19E+00	2.87E+01	0.966	0.0344	575.2	555.5
505-60-2	H	2.08E-07	8.87E-12	1.25E-02	36,500	474	47	1.07E+00	6.23E-02	0.843	0.157	28.5	24.2
74-82-8	methane	4.04E-05	3.40E-13	2.42E+00	36,500	1,017	1,155	8.66E-01	1.21E+01	0.982	0.0175	708.7	696.3
91-20-3	naphthalene	3.52E-06	3.42E-07	2.11E-01	36,500	474	324	9.11E-01	1.05E+00	0.526	0.474	198.7	104.9
108-88-3	toluene	1.39E-06	1.66E-11	8.34E-02	36,500	507	548	1.41E+00	4.17E-01	0.896	0.1041	336.3	301.4
75-69-4	trichlorofluoromethane	3.28E-08	1.78E-14	1.97E-03	36,500	539	610	2.52E-03	9.84E-03	0.912	0.088	374.2	341.2
35822-46-9	1,2,3,4,6,7,8-HpCDD	1.47E-12	1.07E-12	1.26E-08	36,500	489	20		4.41E-07	0.001	0.9990	0.3	1.0
3268-87-9	1,2,3,4,6,7,8,9-OCDD	9.00E-12	6.54E-12	7.72E-08	36,500	489	11		2.70E-06	0.001	0.999	0.1	1.0
67562-39-4	1,2,3,4,6,7,8-HpCDF	8.57E-13	6.22E-13	7.34E-09	36,500	489	23		2.57E-07	0.001	0.9989	1.1	1.0
39001-02-0	1,2,3,4,6,7,8,9-OCDF	2.92E-12	2.12E-12	2.50E-08	36,500	489	3		8.76E-07	0.001	0.999	0.0	1.0
7664-41-7	ammonia	1.68E-08	9.41E-13	1.01E-03	36,500	998	33	5.07E-01	5.04E-03	0.988	0.0125	20.2	20.0
7782-50-5	chlorine	1.88E-05	1.48E-07	1.13E+00	36,500	547	603	1.89E-01	5.64E+00	0.989	0.011	369.8	365.7
7647-01-0	hydrogen chloride	2.59E-03	2.04E-05	1.55E+02	36,500	547	538	2.52E+00	7.76E+02	0.989	0.0111	330.1	326.5
7487-94-7	mercuric chloride	2.56E-06	1.88E-06	1.53E-01	36,500	396	0	5.49E-02	7.69E-01	0.002	0.998	0.0	1.0
7439-97-6	elemental mercury	1.09E-09	2.54E-10	6.56E-05	36,500	949	990	5.58E-03	3.28E-04	0.018	0.9824	601.3	11.6

CALCULATIONS FOR ESTIMATING DRINKING WATER AND SEDIMENT CONCENTRATIONS - KENTUCKY RIVER
TDC TECHNOLOGY
(for Noncancer Hazards)

CAS No.	COPC Name	Cs mg/kg	LR g/yr	LE g/yr	LT g/yr	Cwtot g/m^3	Cwctot mg/L	Cdw mg/L	Csb mg/kg
123-91-1	1,4-dioxane	2.04E-09	3.84E+00	3.17E-05	7.55E+00	1.83E-08	1.85E-08	1.85E-08	3.69E-10
78-93-3	2-butanone	1.73E-09	1.10E+00	2.63E-04	1.21E+01	2.16E-08	2.18E-08	2.18E-08	1.74E-09
67-64-1	acetone	7.40E-09	9.06E+00	6.51E-04	1.74E+02	3.38E-07	3.40E-07	3.40E-07	6.80E-09
71-43-2	benzene	1.14E-12	1.22E-03	1.21E-07	4.07E-01	2.73E-10	2.63E-10	2.63E-10	6.50E-10
117-81-7	bis(2-ethylhexyl)-phthalate	4.89E-07	5.73E-05	1.09E-01	2.15E+00	2.57E-07	3.37E-09	3.11E-09	1.38E-05
74-87-3	chloromethane	4.32E-14	6.03E-05	2.99E-09	5.76E-02	4.27E-11	4.28E-11	4.28E-11	1.07E-11
75-71-8	dichlorodifluoromethane	1.68E-12	6.00E-04	3.07E-07	1.98E-02	1.27E-11	1.23E-11	1.23E-11	3.02E-11
84-74-2	di-n-butyl phthalate	9.81E-08	5.09E-03	2.18E-02	5.77E-01	3.08E-09	1.43E-09	1.43E-09	9.00E-08
117-84-0	di-n-octyl phthalate	9.30E-08	1.93E-06	2.07E-02	1.95E+00	5.31E-07	5.48E-10	7.86E-12	2.88E-05
74-84-0	ethane	5.95E-12	3.54E-03	9.36E-07	3.67E+01	1.67E-08	1.64E-08	1.64E-08	2.14E-08
505-60-2	H	8.87E-12	9.67E-04	1.87E-06	1.15E+00	2.76E-09	2.37E-09	2.37E-09	2.21E-08
74-82-8	methane	3.40E-13	4.16E-04	2.99E-08	1.54E+01	5.79E-09	5.79E-09	5.79E-09	2.03E-09
91-20-3	naphthalene	3.42E-07	3.07E-01	7.60E-02	2.56E+00	4.63E-09	2.48E-09	2.48E-09	1.18E-07
108-88-3	toluene	1.66E-11	9.06E-03	2.69E-06	1.92E+00	1.43E-09	1.31E-09	1.31E-09	7.32E-09
75-69-4	trichlorofluoromethane	1.78E-14	1.28E-05	2.54E-09	1.43E-02	9.71E-12	9.02E-12	9.02E-12	4.12E-11
35822-46-9	1,2,3,4,6,7,8-HpCDD	1.07E-12	4.68E-10	2.38E-07	6.93E-07	1.89E-13	1.96E-16	4.16E-18	1.03E-11
3268-87-9	1,2,3,4,6,7,8,9-OCDD	6.54E-12	1.81E-09	1.46E-06	4.24E-06	1.16E-12	1.19E-15	1.61E-17	6.28E-11
67562-39-4	1,2,3,4,6,7,8-HpCDF	6.22E-13	1.08E-09	1.39E-07	4.04E-07	1.09E-13	1.21E-16	9.58E-18	5.94E-12
39001-02-0	1,2,3,4,6,7,8,9-OCDF	2.12E-12	9.28E-10	4.72E-07	1.37E-06	3.75E-13	3.90E-16	8.25E-18	2.03E-11
7664-41-7	ammonia	9.41E-13	1.69E-03	2.37E-08	5.15E-01	1.12E-09	1.13E-09	1.13E-09	8.20E-11
7782-50-5	chlorine	1.48E-07	3.00E+02	0.00E+00	3.07E+02	1.93E-07	1.94E-07	1.94E-07	0.00E+00
7647-01-0	hydrogen chloride	2.04E-05	4.12E+04	0.00E+00	4.22E+04	2.89E-05	2.91E-05	2.91E-05	0.00E+00
7487-94-7	mercuric chloride	1.88E-06	8.76E-03	1.40E-01	1.13E+00	2.74E-07	5.95E-10	2.97E-10	1.49E-05
7439-97-6	elemental mercury	2.54E-10	6.86E-05	1.89E-05	6.07E-03	1.35E-10	2.43E-12	2.41E-12	7.22E-09

CALCULATIONS FOR ESTIMATING DRINKING WATER AND SEDIMENT CONCENTRATIONS - KENTUCKY RIVER
TDC TECHNOLOGY
(for Cancer Risks)

CAS No.	COPC Name	Cs mg/kg	LR g/yr	LE g/yr	LT g/yr	Cwtot g/m^3	Cwctot mg/L	Cdw mg/L	Csb mg/kg
123-91-1	1,4-dioxane	2.04E-09	3.84E+00	3.17E-05	7.54E+00	1.83E-08	1.85E-08	1.85E-08	3.69E-10
78-93-3	2-butanone	1.72E-09	1.10E+00	2.63E-04	1.21E+01	2.16E-08	2.18E-08	2.18E-08	1.74E-09
67-64-1	acetone	7.40E-09	9.06E+00	6.50E-04	1.74E+02	3.38E-07	3.40E-07	3.40E-07	6.80E-09
71-43-2	benzene	1.14E-12	1.22E-03	1.21E-07	4.07E-01	2.73E-10	2.63E-10	2.63E-10	6.50E-10
117-81-7	bis(2-ethylhexyl)-phthalate	4.29E-07	5.03E-05	9.54E-02	2.14E+00	2.56E-07	3.34E-09	3.09E-09	1.37E-05
74-87-3	chloromethane	4.32E-14	6.03E-05	2.99E-09	5.76E-02	4.27E-11	4.28E-11	4.28E-11	1.07E-11
75-71-8	dichlorodifluoromethane	1.67E-12	6.00E-04	3.07E-07	1.98E-02	1.27E-11	1.23E-11	1.23E-11	3.02E-11
84-74-2	di-n-butyl phthalate	8.60E-08	4.46E-03	1.91E-02	5.74E-01	3.06E-09	1.43E-09	1.42E-09	8.94E-08
117-84-0	di-n-octyl phthalate	7.91E-08	1.64E-06	1.76E-02	1.94E+00	5.30E-07	5.47E-10	7.84E-12	2.88E-05
74-84-0	ethane	5.95E-12	3.54E-03	9.36E-07	3.67E+01	1.67E-08	1.64E-08	1.64E-08	2.14E-08
505-60-2	H	8.87E-12	9.67E-04	1.87E-06	1.15E+00	2.76E-09	2.37E-09	2.37E-09	2.21E-08
74-82-8	methane	3.40E-13	4.16E-04	2.99E-08	1.54E+01	5.79E-09	5.79E-09	5.79E-09	2.03E-09
91-20-3	naphthalene	2.97E-07	2.66E-01	6.60E-02	2.51E+00	4.54E-09	2.43E-09	2.43E-09	1.16E-07
108-88-3	toluene	1.66E-11	9.06E-03	2.69E-06	1.92E+00	1.43E-09	1.31E-09	1.31E-09	7.32E-09
75-69-4	trichlorofluoromethane	1.78E-14	1.28E-05	2.54E-09	1.43E-02	9.71E-12	9.02E-12	9.02E-12	4.12E-11
35822-46-9	1,2,3,4,6,7,8-HpCDD	5.37E-13	2.35E-10	1.19E-07	5.74E-07	1.57E-13	1.63E-16	3.44E-18	8.50E-12
3268-87-9	1,2,3,4,6,7,8,9-OCDD	3.28E-12	9.06E-10	7.31E-07	3.51E-06	9.59E-13	9.89E-16	1.33E-17	5.20E-11
67562-39-4	1,2,3,4,6,7,8-HpCDF	3.12E-13	5.44E-10	6.96E-08	3.34E-07	9.05E-14	1.00E-16	7.93E-18	4.91E-12
39001-02-0	1,2,3,4,6,7,8,9-OCDF	1.06E-12	4.66E-10	2.37E-07	1.14E-06	3.11E-13	3.23E-16	6.84E-18	1.69E-11
7664-41-7	ammonia	9.41E-13	1.69E-03	2.37E-08	5.15E-01	1.12E-09	1.13E-09	1.13E-09	8.20E-11
7782-50-5	chlorine	1.46E-07	2.96E+02	0.00E+00	3.03E+02	1.91E-07	1.92E-07	1.92E-07	0.00E+00
7647-01-0	hydrogen chloride	2.02E-05	4.08E+04	0.00E+00	4.17E+04	2.86E-05	2.88E-05	2.88E-05	0.00E+00
7487-94-7	mercuric chloride	9.42E-07	4.38E-03	6.99E-02	1.05E+00	2.56E-07	5.55E-10	2.78E-10	1.39E-05
7439-97-6	elemental mercury	1.83E-10	4.93E-05	1.36E-05	6.04E-03	1.35E-10	2.42E-12	2.40E-12	7.19E-09

CALCULATIONS FOR ESTIMATING DRINKING WATER AND SEDIMENT CONCENTRATIONS - KENTUCKY RIVER
TDC TECHNOLOGY
(for Cancer Risks - Exposure Duration > 30 years)

CAS No.	COPC Name	Cs mg/kg	LR g/yr	LE g/yr	LT g/yr	Cwtot g/m^3	Cwctot mg/L	Cdw mg/L	Csb mg/kg
123-91-1	1,4-dioxane	3.74E-11	7.05E-02	5.82E-07	3.78E+00	9.19E-09	9.25E-09	9.25E-09	1.85E-10
78-93-3	2-butanone	3.17E-11	2.02E-02	4.84E-06	1.10E+01	1.97E-08	1.98E-08	1.98E-08	1.59E-09
67-64-1	acetone	1.36E-10	1.66E-01	1.19E-05	1.65E+02	3.21E-07	3.23E-07	3.23E-07	6.46E-09
71-43-2	benzene	2.10E-14	2.24E-05	2.22E-09	4.06E-01	2.72E-10	2.62E-10	2.62E-10	6.48E-10
117-81-7	bis(2-ethylhexyl)-phthalate	8.98E-09	1.05E-06	2.00E-03	2.04E+00	2.44E-07	3.20E-09	2.95E-09	1.31E-05
74-87-3	chloromethane	7.94E-16	1.11E-06	5.48E-11	5.75E-02	4.27E-11	4.28E-11	4.28E-11	1.07E-11
75-71-8	dichlorodifluoromethane	3.08E-14	1.10E-05	5.64E-09	1.92E-02	1.23E-11	1.19E-11	1.19E-11	2.93E-11
84-74-2	di-n-butyl phthalate	1.80E-09	9.35E-05	4.01E-04	5.51E-01	2.94E-09	1.37E-09	1.37E-09	8.58E-08
117-84-0	di-n-octyl phthalate	1.71E-09	3.55E-08	3.81E-04	1.93E+00	5.26E-07	5.43E-10	7.77E-12	2.85E-05
74-84-0	ethane	1.09E-13	6.51E-05	1.72E-08	3.67E+01	1.67E-08	1.64E-08	1.64E-08	2.14E-08
505-60-2	H	1.63E-13	1.78E-05	3.43E-08	1.15E+00	2.75E-09	2.36E-09	2.36E-09	2.21E-08
74-82-8	methane	6.24E-15	7.64E-06	5.49E-10	1.54E+01	5.79E-09	5.79E-09	5.79E-09	2.03E-09
91-20-3	naphthalene	6.28E-09	5.64E-03	1.40E-03	2.18E+00	3.95E-09	2.12E-09	2.11E-09	1.01E-07
108-88-3	toluene	3.04E-13	1.66E-04	4.95E-08	1.91E+00	1.42E-09	1.30E-09	1.30E-09	7.28E-09
75-69-4	trichlorofluoromethane	3.26E-16	2.36E-07	4.67E-11	1.43E-02	9.70E-12	9.01E-12	9.01E-12	4.12E-11
35822-46-9	1,2,3,4,6,7,8-HpCDD	6.25E-13	2.74E-10	1.39E-07	5.94E-07	1.62E-13	1.68E-16	3.56E-18	8.79E-12
3268-87-9	1,2,3,4,6,7,8,9-OCDD	3.83E-12	1.06E-09	8.53E-07	3.63E-06	9.92E-13	1.02E-15	1.38E-17	5.38E-11
67562-39-4	1,2,3,4,6,7,8-HpCDF	3.64E-13	6.33E-10	8.09E-08	3.46E-07	9.36E-14	1.04E-16	8.20E-18	5.08E-12
39001-02-0	1,2,3,4,6,7,8,9-OCDF	1.24E-12	5.44E-10	2.77E-07	1.18E-06	3.21E-13	3.34E-16	7.07E-18	1.74E-11
7664-41-7	ammonia	1.73E-14	3.10E-05	4.35E-10	5.13E-01	1.12E-09	1.12E-09	1.12E-09	8.18E-11
7782-50-5	chlorine	2.72E-09	5.50E+00	0.00E+00	1.25E+01	7.84E-09	7.90E-09	7.90E-09	0.00E+00
7647-01-0	hydrogen chloride	3.74E-07	7.57E+02	0.00E+00	1.69E+03	1.16E-06	1.17E-06	1.17E-06	0.00E+00
7487-94-7	mercuric chloride	1.86E-06	8.63E-03	1.38E-01	1.12E+00	2.74E-07	5.93E-10	2.97E-10	1.48E-05
7439-97-6	elemental mercury	4.92E-12	1.33E-06	3.65E-07	5.98E-03	1.33E-10	2.40E-12	2.37E-12	7.12E-09

CALCULATIONS FOR LAND BASED MEDIA CONCENTRATIONS
TDC TECHNOLOGY
"Rmax"

CAS No.	COPC Name	Ca µg/m^3	Ds mg/kg/yr	CstD mg/kg	Pd_ag mg/kg	Pv_ag mg/kg
123-91-1	1,4-dioxane	7.54E-05	1.20E-05	2.04E-09	3.28E-06	
78-93-3	2-butanone	1.45E-04	1.55E-06	1.73E-09		1.42E-13
67-64-1	acetone	2.08E-03	2.22E-05	7.40E-09		1.15E-11
71-43-2	benzene	6.17E-05	2.47E-07	1.14E-12		2.18E-16
117-81-7	bis(2-ethylhexyl)-phthalate	2.76E-05	5.40E-06	4.89E-07	1.04E-06	4.97E-10
74-87-3	chloromethane	1.58E-05	4.21E-08	4.32E-14		4.89E-17
75-71-8	dichlorodifluoromethane	1.83E-05	4.87E-08	1.68E-12		3.61E-19
84-74-2	di-n-butyl phthalate	1.97E-06	1.08E-06	9.81E-08	5.24E-10	4.14E-13
117-84-0	di-n-octyl phthalate	2.77E-05	8.41E-07	9.30E-08	1.78E-07	7.71E-09
74-84-0	ethane	2.39E-02	9.58E-05	5.95E-12	1.49E-14	1.81E-13
505-60-2	H	1.41E-05	2.08E-07	8.87E-12	2.62E-12	4.16E-15
74-82-8	methane	1.01E-02	4.04E-05	3.40E-13	4.27E-16	
91-20-3	naphthalene	2.76E-05	3.52E-06	3.42E-07		9.72E-15
108-88-3	toluene	3.47E-04	1.39E-06	1.66E-11		2.56E-14
75-69-4	trichlorofluoromethane	8.19E-06	3.28E-08	1.78E-14		5.93E-19
35822-46-9	1,2,3,4,6,7,8-HpCDD	9.24E-12	1.47E-12	1.07E-12	4.02E-13	
3268-87-9	1,2,3,4,6,7,8,9-OCDD	5.65E-11	9.00E-12	6.54E-12	2.46E-12	
67562-39-4	1,2,3,4,6,7,8-HpCDF	5.38E-12	8.57E-13	6.22E-13	2.34E-13	
39001-02-0	1,2,3,4,6,7,8,9-OCDF	1.83E-11	2.92E-12	2.12E-12	7.97E-13	
7664-41-7	ammonia	6.29E-06	1.68E-08	9.41E-13	1.64E-17	
7782-50-5	chlorine	7.51E-05	1.88E-05	1.48E-07		
7647-01-0	hydrogen chloride	2.26E-04	2.59E-03	2.04E-05		
7487-94-7	mercuric chloride	7.84E-07	2.56E-06	1.88E-06	5.33E-09	3.25E-12
7439-97-6	elemental mercury	8.19E-07	1.09E-09	2.54E-10		

CALCULATIONS FOR LAND BASED MEDIA CONCENTRATIONS
TDC TECHNOLOGY
("Rmax" for Noncancer Hazards)

CAS No.	COPC Name	Cs mg/kg	Pr_ag mg/kg	Pag mg/kg	Pr_bg mg/kg
123-91-1	1,4-dioxane	2.04E-09	1.71E-08	3.30E-06	2.42E-06
78-93-3	2-butanone	1.73E-09	1.45E-08	1.45E-08	3.99E-08
67-64-1	acetone	7.40E-09	6.20E-08	6.20E-08	5.49E-07
71-43-2	benzene	1.14E-12	2.71E-12	2.71E-12	9.17E-13
117-81-7	bis(2-ethylhexyl)-phthalate	4.89E-07	2.14E-08	1.07E-06	4.17E-12
74-87-3	chloromethane	4.32E-14	3.62E-13	3.62E-13	5.14E-12
75-71-8	dichlorodifluoromethane	1.68E-12	3.67E-12	3.67E-12	2.91E-13
84-74-2	di-n-butyl phthalate	9.81E-08	7.26E-09	7.78E-09	1.82E-10
117-84-0	di-n-octyl phthalate	9.30E-08	7.49E-11	1.86E-07	2.86E-11
74-84-0	ethane	5.95E-12	2.07E-11	2.09E-11	2.89E-13
505-60-2	H	8.87E-12	1.39E-11	1.65E-11	8.07E-14
74-82-8	methane	3.40E-13	3.09E-12	3.09E-12	4.03E-12
91-20-3	naphthalene	3.42E-07	1.64E-07	1.64E-07	9.19E-10
108-88-3	toluene	1.66E-11	1.77E-11	1.78E-11	1.28E-11
75-69-4	trichlorofluoromethane	1.78E-14	2.47E-14	2.47E-14	1.44E-14
35822-46-9	1,2,3,4,6,7,8-HpCDD	1.07E-12	9.84E-16	4.03E-13	5.83E-15
3268-87-9	1,2,3,4,6,7,8,9-OCDD	6.54E-12	4.61E-15	2.46E-12	3.21E-14
67562-39-4	1,2,3,4,6,7,8-HpCDF	6.22E-13	1.28E-15	2.35E-13	4.66E-15
39001-02-0	1,2,3,4,6,7,8,9-OCDF	2.12E-12	1.95E-15	7.99E-13	1.65E-14
7664-41-7	ammonia	9.41E-13	2.68E-11	2.68E-11	4.78E-11
7782-50-5	chlorine	1.48E-07	1.24E-06	1.24E-06	0.00E+00
7647-01-0	hydrogen chloride	2.04E-05	0.00E+00	0.00E+00	0.00E+00
7487-94-7	mercuric chloride	1.88E-06	2.73E-08	3.26E-08	6.78E-08
7439-97-6	elemental mercury	2.54E-10	0.00E+00	0.00E+00	0.00E+00

CALCULATIONS FOR LAND BASED MEDIA CONCENTRATIONS
TDC TECHNOLOGY
("Rmax" for Cancer Risks)

CAS No.	COPC Name	Cs mg/kg	Pr_ag mg/kg	Pag mg/kg	Pr_bg mg/kg
123-91-1	1,4-dioxane	2.04E-09	1.71E-08	3.30E-06	2.42E-06
78-93-3	2-butanone	1.72E-09	1.44E-08	1.44E-08	3.98E-08
67-64-1	acetone	7.40E-09	6.20E-08	6.20E-08	5.49E-07
71-43-2	benzene	1.14E-12	2.71E-12	2.71E-12	9.16E-13
117-81-7	bis(2-ethylhexyl)-phthalate	4.29E-07	1.87E-08	1.06E-06	3.66E-12
74-87-3	chloromethane	4.32E-14	3.62E-13	3.62E-13	5.14E-12
75-71-8	dichlorodifluoromethane	1.67E-12	3.67E-12	3.67E-12	2.91E-13
84-74-2	di-n-butyl phthalate	8.60E-08	6.36E-09	6.89E-09	1.60E-10
117-84-0	di-n-octyl phthalate	7.91E-08	6.37E-11	1.86E-07	2.44E-11
74-84-0	ethane	5.95E-12	2.07E-11	2.09E-11	2.89E-13
505-60-2	H	8.87E-12	1.39E-11	1.65E-11	8.07E-14
74-82-8	methane	3.40E-13	3.09E-12	3.09E-12	4.03E-12
91-20-3	naphthalene	2.97E-07	1.42E-07	1.42E-07	7.98E-10
108-88-3	toluene	1.66E-11	1.77E-11	1.78E-11	1.28E-11
75-69-4	trichlorofluoromethane	1.78E-14	2.47E-14	2.47E-14	1.44E-14
35822-46-9	1,2,3,4,6,7,8-HpCDD	5.37E-13	4.94E-16	4.02E-13	2.92E-15
3268-87-9	1,2,3,4,6,7,8,9-OCDD	3.28E-12	2.31E-15	2.46E-12	1.61E-14
67562-39-4	1,2,3,4,6,7,8-HpCDF	3.12E-13	6.40E-16	2.35E-13	2.34E-15
39001-02-0	1,2,3,4,6,7,8,9-OCDF	1.06E-12	9.79E-16	7.98E-13	8.26E-15
7664-41-7	ammonia	9.41E-13	2.68E-11	2.68E-11	4.78E-11
7782-50-5	chlorine	1.46E-07	1.23E-06	1.23E-06	0.00E+00
7647-01-0	hydrogen chloride	2.02E-05	0.00E+00	0.00E+00	0.00E+00
7487-94-7	mercuric chloride	9.42E-07	1.37E-08	1.90E-08	3.39E-08
7439-97-6	elemental mercury	1.83E-10	0.00E+00	0.00E+00	0.00E+00

CALCULATIONS FOR LAND BASED MEDIA CONCENTRATIONS
TDC TECHNOLOGY
("Fmax")

CAS No.	COPC Name	Ca	Ds	CstD	Pd_ag	Pd_f	Pd_s	Pv_ag	Pv_f	Pv_s
		µg/m^3	mg/kg/yr	mg/kg	mg/kg	mg/kg	mg/kg	mg/kg	mg/kg	mg/kg
123-91-1	1,4-dioxane	7.54E-05	1.20E-05	2.04E-09	3.28E-06	3.68E-05	1.08E-05			
78-93-3	2-butanone	1.45E-04	1.55E-06	1.73E-09				2.45E-10	2.45E-10	1.22E-10
67-64-1	acetone	2.08E-03	2.22E-05	7.40E-09				1.38E-09	1.38E-09	6.89E-10
71-43-2	benzene	6.17E-05	2.47E-07	1.14E-12				8.84E-13	8.84E-11	4.42E-11
117-81-7	bis(2-ethylhexyl)-phthalate	2.76E-05	5.40E-06	4.89E-07	1.04E-06	1.17E-05	3.45E-06	4.48E-06	4.48E-04	2.24E-04
74-87-3	chloromethane	1.58E-05	4.21E-08	4.32E-14				7.75E-13	7.75E-13	3.87E-13
75-71-8	dichlorodifluoromethane	1.83E-05	4.87E-08	1.68E-12				4.94E-15	4.94E-13	2.47E-13
84-74-2	di-n-butyl phthalate	1.97E-06	1.08E-06	9.81E-08	5.24E-10	5.88E-09	1.73E-09	5.13E-08	5.13E-06	2.57E-06
117-84-0	di-n-octyl phthalate	2.77E-05	8.41E-07	9.30E-08	1.78E-07	1.99E-06	5.87E-07	6.95E-05	6.95E-03	3.47E-03
74-84-0	ethane	2.39E-02	9.58E-05	5.95E-12	1.49E-14	1.68E-13	4.94E-14	1.89E-12	1.89E-10	9.43E-11
505-60-2	H	1.41E-05	2.08E-07	8.87E-12	2.62E-12	2.93E-11	8.64E-12	7.35E-11	7.35E-09	3.67E-09
74-82-8	methane	1.01E-02	4.04E-05	3.40E-13	4.27E-16	4.79E-15	1.41E-15			
91-20-3	naphthalene	2.76E-05	3.52E-06	3.42E-07				8.75E-11	8.75E-09	4.38E-09
108-88-3	toluene	3.47E-04	1.39E-06	1.66E-11				1.84E-11	1.84E-09	9.20E-10
75-69-4	trichlorofluoromethane	8.19E-06	3.28E-08	1.78E-14				1.81E-14	1.81E-12	9.04E-13
35822-46-9	1,2,3,4,6,7,8-HpCDD	9.24E-12	1.47E-12	1.07E-12	4.02E-13	4.51E-12	1.33E-12			
3268-87-9	1,2,3,4,6,7,8,9-OCDD	5.65E-11	9.00E-12	6.54E-12	2.46E-12	2.76E-11	8.12E-12			
67562-39-4	1,2,3,4,6,7,8-HpCDF	5.38E-12	8.57E-13	6.22E-13	2.34E-13	2.62E-12	7.72E-13			
39001-02-0	1,2,3,4,6,7,8,9-OCDF	1.83E-11	2.92E-12	2.12E-12	7.97E-13	8.94E-12	2.63E-12			
7664-41-7	ammonia	6.29E-06	1.68E-08	9.41E-13	1.64E-17	1.84E-16	5.43E-17			
7782-50-5	chlorine	7.51E-05	1.88E-05	1.48E-07						
7647-01-0	hydrogen chloride	2.26E-04	2.59E-03	2.04E-05						
7487-94-7	mercuric chloride	7.84E-07	2.56E-06	1.88E-06	5.33E-09	5.97E-08	1.76E-08	9.92E-07	9.92E-07	4.96E-07
7439-97-6	elemental mercury	8.19E-07	1.09E-09	2.54E-10						

CALCULATIONS FOR LAND BASED MEDIA CONCENTRATIONS
TDC TECHNOLOGY
("Fmax" for Noncancer Hazards)

CAS No.	COPC Name	Cs mg/kg	Pr_ag mg/kg	Pr_f mg/kg	Pr_s mg/kg	Pag mg/kg	Pr_bg mg/kg	Pf mg/kg
123-91-1	1,4-dioxane	2.04E-09	1.71E-08	1.71E-08	1.71E-08	3.30E-06	2.42E-06	3.68E-05
78-93-3	2-butanone	1.73E-09	1.45E-08	1.45E-08	1.45E-08	1.47E-08	3.99E-08	1.47E-08
67-64-1	acetone	7.40E-09	6.20E-08	6.20E-08	6.20E-08	6.34E-08	5.49E-07	6.34E-08
71-43-2	benzene	1.14E-12	2.71E-12	2.71E-12	2.71E-12	3.60E-12	9.17E-13	9.11E-11
117-81-7	bis(2-ethylhexyl)-phthalate	4.89E-07	2.14E-08	2.14E-08	2.14E-08	5.55E-06	4.17E-12	4.60E-04
74-87-3	chloromethane	4.32E-14	3.62E-13	3.62E-13	3.62E-13	1.14E-12	5.14E-12	1.14E-12
75-71-8	dichlorodifluoromethane	1.68E-12	3.67E-12	3.67E-12	3.67E-12	3.67E-12	2.91E-13	4.16E-12
84-74-2	di-n-butyl phthalate	9.81E-08	7.26E-09	7.30E-09	7.30E-09	5.91E-08	1.82E-10	5.15E-06
117-84-0	di-n-octyl phthalate	9.30E-08	7.49E-11	7.49E-11	7.49E-11	6.96E-05	2.86E-11	6.95E-03
74-84-0	ethane	5.95E-12	2.07E-11	2.07E-11	2.07E-11	2.26E-11	2.89E-13	2.09E-10
505-60-2	H	8.87E-12	1.39E-11	1.39E-11	1.39E-11	9.00E-11	8.07E-14	7.39E-09
74-82-8	methane	3.40E-13	3.09E-12	3.09E-12	3.09E-12	3.09E-12	4.03E-12	3.09E-12
91-20-3	naphthalene	3.42E-07	1.64E-07	1.64E-07	1.64E-07	1.64E-07	9.19E-10	1.72E-07
108-88-3	toluene	1.66E-11	1.77E-11	1.77E-11	1.77E-11	3.61E-11	1.28E-11	1.86E-09
75-69-4	trichlorofluoromethane	1.78E-14	2.47E-14	2.47E-14	2.47E-14	4.28E-14	1.44E-14	1.83E-12
35822-46-9	1,2,3,4,6,7,8-HpCDD	1.07E-12	9.84E-16	9.84E-16	9.84E-16	4.03E-13	5.83E-15	4.51E-12
3268-87-9	1,2,3,4,6,7,8,9-OCDD	6.54E-12	4.61E-15	4.61E-15	4.61E-15	2.46E-12	3.21E-14	2.76E-11
67562-39-4	1,2,3,4,6,7,8-HpCDF	6.22E-13	1.28E-15	1.28E-15	1.28E-15	2.35E-13	4.66E-15	2.62E-12
39001-02-0	1,2,3,4,6,7,8,9-OCDF	2.12E-12	1.95E-15	1.95E-15	1.95E-15	7.99E-13	1.65E-14	8.94E-12
7664-41-7	ammonia	9.41E-13	2.68E-11	2.68E-11	2.68E-11	2.68E-11	4.78E-11	2.68E-11
7782-50-5	chlorine	1.48E-07	1.24E-06	1.24E-06	1.24E-06	1.24E-06		1.24E-06
7647-01-0	hydrogen chloride	2.04E-05						
7487-94-7	mercuric chloride	1.88E-06	2.73E-08			1.02E-06	6.78E-08	1.05E-06
7439-97-6	elemental mercury	2.54E-10						

CALCULATIONS FOR LAND BASED MEDIA CONCENTRATIONS
TDC TECHNOLOGY
("Fmax" for Noncancer Hazards)

CAS No.	COPC Name	Ps mg/kg	Pr_g mg/kg	Abeef mg/kg	Amilk mg/kg	Apork mg/kg	Aegg mg/kg	Achicken mg/kg
123-91-1	1,4-dioxane	1.09E-05	1.71E-08	9.29E-09	2.96E-09	4.89E-10	3.86E-14	6.75E-14
78-93-3	2-butanone	1.46E-08	1.45E-08	1.82E-11	6.58E-12	8.74E-12	1.29E-13	2.27E-13
67-64-1	acetone	6.27E-08	6.20E-08	2.14E-11	7.72E-12	1.02E-11	1.51E-13	2.65E-13
71-43-2	benzene	4.69E-11	2.71E-12	3.11E-12	9.99E-13	3.07E-13	8.08E-16	1.41E-15
117-81-7	bis(2-ethylhexyl)-phthalate	2.28E-04	2.14E-08	1.84E-04	5.88E-05	1.54E-05	2.52E-10	4.41E-10
74-87-3	chloromethane	7.50E-13	3.62E-13	4.92E-15	1.65E-15	1.12E-15	1.26E-17	2.21E-17
75-71-8	dichlorodifluoromethane	3.92E-12	3.67E-12	1.81E-13	6.44E-14	8.15E-14	1.20E-15	2.10E-15
84-74-2	di-n-butyl phthalate	2.58E-06	7.30E-09	1.88E-06	6.01E-07	1.61E-07	5.54E-11	9.69E-11
117-84-0	di-n-octyl phthalate	3.47E-03	7.49E-11	5.42E-04	1.73E-04	4.57E-05	6.74E-12	1.18E-11
74-84-0	ethane	1.15E-10	2.07E-11	4.59E-12	1.49E-12	6.02E-13	3.85E-15	6.75E-15
505-60-2	H	3.70E-09	1.39E-11	3.92E-10	1.25E-10	3.34E-11	6.62E-15	1.16E-14
74-82-8	methane	3.09E-12	3.09E-12	2.16E-14			6.25E-18	1.25E-17
91-20-3	naphthalene	1.68E-07	1.64E-07	3.24E-08	1.12E-08	1.62E-08	2.52E-10	4.40E-10
108-88-3	toluene	9.38E-10	1.77E-11	1.44E-10	4.60E-11	1.28E-11	1.27E-14	2.22E-14
75-69-4	trichlorofluoromethane	9.29E-13	2.47E-14	1.10E-13	3.52E-14	1.00E-14	1.34E-17	2.34E-17
35822-46-9	1,2,3,4,6,7,8-HpCDD	1.33E-12	9.84E-16	3.81E-13	1.21E-13	2.40E-14	8.75E-17	1.53E-16
3268-87-9	1,2,3,4,6,7,8,9-OCDD	8.12E-12	4.61E-15	1.82E-12	5.77E-13	1.15E-13	4.18E-16	7.32E-16
67562-39-4	1,2,3,4,6,7,8-HpCDF	7.74E-13	1.28E-15	4.16E-13	1.32E-13	2.62E-14	9.65E-17	1.69E-16
39001-02-0	1,2,3,4,6,7,8,9-OCDF	2.63E-12	1.95E-15	7.57E-13	2.39E-13	4.75E-14	1.74E-16	3.04E-16
7664-41-7	ammonia	2.68E-11	2.68E-11	2.85E-14	1.09E-14	1.26E-14	2.15E-16	3.77E-16
7782-50-5	chlorine	1.24E-06	1.24E-06	5.29E-09	1.92E-09	2.57E-09	3.81E-11	6.68E-11
7647-01-0	hydrogen chloride			5.33E-10	8.98E-11	4.78E-10	9.88E-12	1.73E-11
7487-94-7	mercuric chloride	5.14E-07	1.75E-08	6.00E-08	3.80E-08	5.00E-11	1.08E-09	1.08E-09
7439-97-6	elemental mercury							

CALCULATIONS FOR LAND BASED MEDIA CONCENTRATIONS
TDC TECHNOLOGY
("Fmax" for Child Cancer Risks)

CAS No.	COPC Name	Cs	Pr_ag	Pr_f	Pr_s	Pag	Pr_bg	Pf
		mg/kg	mg/kg	mg/kg	mg/kg	mg/kg	mg/kg	mg/kg
123-91-1	1,4-dioxane	2.04E-09	1.71E-08	1.71E-08	1.71E-08	3.30E-06	2.42E-06	3.68E-05
78-93-3	2-butanone	1.72E-09	1.44E-08	1.44E-08	1.44E-08	1.47E-08	3.98E-08	1.47E-08
67-64-1	acetone	7.40E-09	6.20E-08	6.20E-08	6.20E-08	6.34E-08	5.49E-07	6.34E-08
71-43-2	benzene	1.14E-12	2.71E-12	2.71E-12	2.71E-12	3.60E-12	9.16E-13	9.11E-11
117-81-7	bis(2-ethylhexyl)-phthalate	4.29E-07	1.87E-08	1.87E-08	1.87E-08	5.54E-06	3.66E-12	4.60E-04
74-87-3	chloromethane	4.32E-14	3.62E-13	3.62E-13	3.62E-13	1.14E-12	5.14E-12	1.14E-12
75-71-8	dichlorodifluoromethane	1.67E-12	3.67E-12	3.67E-12	3.67E-12	3.67E-12	2.91E-13	4.16E-12
84-74-2	di-n-butyl phthalate	8.60E-08	6.36E-09	6.40E-09	6.40E-09	5.82E-08	1.60E-10	5.14E-06
117-84-0	di-n-octyl phthalate	7.91E-08	6.37E-11	6.37E-11	6.37E-11	6.96E-05	2.44E-11	6.95E-03
74-84-0	ethane	5.95E-12	2.07E-11	2.07E-11	2.07E-11	2.26E-11	2.89E-13	2.09E-10
505-60-2	H	8.87E-12	1.39E-11	1.39E-11	1.39E-11	9.00E-11	8.07E-14	7.39E-09
74-82-8	methane	3.40E-13	3.09E-12	3.09E-12	3.09E-12	3.09E-12	4.03E-12	3.09E-12
91-20-3	naphthalene	2.97E-07	1.42E-07	1.42E-07	1.42E-07	1.42E-07	7.98E-10	1.51E-07
108-88-3	toluene	1.66E-11	1.77E-11	1.77E-11	1.77E-11	3.61E-11	1.28E-11	1.86E-09
75-69-4	trichlorofluoromethane	1.78E-14	2.47E-14	2.47E-14	2.47E-14	4.28E-14	1.44E-14	1.83E-12
35822-46-9	1,2,3,4,6,7,8-HpCDD	5.37E-13	4.94E-16	4.94E-16	4.94E-16	4.02E-13	2.92E-15	4.51E-12
3268-87-9	1,2,3,4,6,7,8,9-OCDD	3.28E-12	2.31E-15	2.31E-15	2.31E-15	2.46E-12	1.61E-14	2.76E-11
67562-39-4	1,2,3,4,6,7,8-HpCDF	3.12E-13	6.40E-16	6.40E-16	6.40E-16	2.35E-13	2.34E-15	2.62E-12
39001-02-0	1,2,3,4,6,7,8,9-OCDF	1.06E-12	9.79E-16	9.79E-16	9.79E-16	7.98E-13	8.26E-15	8.94E-12
7664-41-7	ammonia	9.41E-13	2.68E-11	2.68E-11	2.68E-11	2.68E-11	4.78E-11	2.68E-11
7782-50-5	chlorine	1.46E-07	1.23E-06	1.23E-06	1.23E-06	1.23E-06		1.23E-06
7647-01-0	hydrogen chloride	2.02E-05						
7487-94-7	mercuric chloride	9.42E-07	1.37E-08			1.01E-06	3.39E-08	1.05E-06
7439-97-6	elemental mercury	1.83E-10						

CALCULATIONS FOR LAND BASED MEDIA CONCENTRATIONS
TDC TECHNOLOGY
("Fmax" for Child Cancer Risks)

CAS No.	COPC Name	Ps mg/kg	Pr_g mg/kg	Abeef mg/kg	Amilk mg/kg	Apork mg/kg	Aegg mg/kg	Achicken mg/kg
123-91-1	1,4-dioxane	1.09E-05	1.71E-08	9.29E-09	2.96E-09	4.89E-10	3.86E-14	6.75E-14
78-93-3	2-butanone	1.46E-08	1.44E-08	1.82E-11	6.57E-12	8.72E-12	1.29E-13	2.26E-13
67-64-1	acetone	6.27E-08	6.20E-08	2.14E-11	7.72E-12	1.02E-11	1.51E-13	2.65E-13
71-43-2	benzene	4.69E-11	2.71E-12	3.11E-12	9.99E-13	3.07E-13	8.08E-16	1.41E-15
117-81-7	bis(2-ethylhexyl)-phthalate	2.28E-04	1.87E-08	1.84E-04	5.88E-05	1.54E-05	2.21E-10	3.87E-10
74-87-3	chloromethane	7.50E-13	3.62E-13	4.92E-15	1.65E-15	1.12E-15	1.26E-17	2.21E-17
75-71-8	dichlorodifluoromethane	3.92E-12	3.67E-12	1.81E-13	6.44E-14	8.15E-14	1.20E-15	2.10E-15
84-74-2	di-n-butyl phthalate	2.57E-06	6.40E-09	1.88E-06	6.01E-07	1.61E-07	4.86E-11	8.50E-11
117-84-0	di-n-octyl phthalate	3.47E-03	6.37E-11	5.42E-04	1.73E-04	4.57E-05	5.73E-12	1.00E-11
74-84-0	ethane	1.15E-10	2.07E-11	4.59E-12	1.49E-12	6.02E-13	3.85E-15	6.75E-15
505-60-2	H	3.70E-09	1.39E-11	3.92E-10	1.25E-10	3.34E-11	6.62E-15	1.16E-14
74-82-8	methane	3.09E-12	3.09E-12	2.16E-14			6.25E-18	1.25E-17
91-20-3	naphthalene	1.46E-07	1.42E-07	2.83E-08	9.80E-09	1.41E-08	2.18E-10	3.82E-10
108-88-3	toluene	9.38E-10	1.77E-11	1.44E-10	4.60E-11	1.28E-11	1.27E-14	2.22E-14
75-69-4	trichlorofluoromethane	9.29E-13	2.47E-14	1.10E-13	3.52E-14	1.00E-14	1.34E-17	2.34E-17
35822-46-9	1,2,3,4,6,7,8-HpCDD	1.33E-12	4.94E-16	3.79E-13	1.20E-13	2.18E-14	4.39E-17	7.69E-17
3268-87-9	1,2,3,4,6,7,8,9-OCDD	8.12E-12	2.31E-15	1.81E-12	5.75E-13	1.04E-13	2.10E-16	3.67E-16
67562-39-4	1,2,3,4,6,7,8-HpCDF	7.73E-13	6.40E-16	4.14E-13	1.31E-13	2.39E-14	4.84E-17	8.47E-17
39001-02-0	1,2,3,4,6,7,8,9-OCDF	2.63E-12	9.79E-16	7.52E-13	2.38E-13	4.33E-14	8.72E-17	1.53E-16
7664-41-7	ammonia	2.68E-11	2.68E-11	2.85E-14	1.09E-14	1.26E-14	2.15E-16	3.77E-16
7782-50-5	chlorine	1.23E-06	1.23E-06	5.23E-09	1.89E-09	2.54E-09	3.77E-11	6.60E-11
7647-01-0	hydrogen chloride			5.27E-10	8.88E-11	4.72E-10	9.77E-12	1.71E-11
7487-94-7	mercuric chloride	5.14E-07	8.76E-09	5.75E-08	3.71E-08	3.72E-11	5.38E-10	5.38E-10
7439-97-6	elemental mercury							

CALCULATIONS FOR LAND BASED MEDIA CONCENTRATIONS
TDC TECHNOLOGY
("Fmax" for Adult Cancer Risks)

CAS No.	COPC Name	Cs	Pr_ag	Pr_f	Pr_s	Pag	Pr_bg	Pf
		mg/kg	mg/kg	mg/kg	mg/kg	mg/kg	mg/kg	mg/kg
123-91-1	1,4-dioxane	3.74E-11	3.14E-10	3.14E-10	3.14E-10	3.28E-06	4.44E-08	3.68E-05
78-93-3	2-butanone	3.17E-11	2.66E-10	2.66E-10	2.66E-10	5.11E-10	7.32E-10	5.11E-10
67-64-1	acetone	1.36E-10	1.14E-09	1.14E-09	1.14E-09	2.52E-09	1.01E-08	2.52E-09
71-43-2	benzene	2.10E-14	4.98E-14	4.98E-14	4.98E-14	9.34E-13	1.68E-14	8.85E-11
117-81-7	bis(2-ethylhexyl)-phthalate	8.98E-09	3.92E-10	3.92E-10	3.92E-10	5.53E-06	7.67E-14	4.60E-04
74-87-3	chloromethane	7.94E-16	6.65E-15	6.65E-15	6.65E-15	7.81E-13	9.45E-14	7.81E-13
75-71-8	dichlorodifluoromethane	3.08E-14	6.74E-14	6.74E-14	6.74E-14	7.23E-14	5.35E-15	5.62E-13
84-74-2	di-n-butyl phthalate	1.80E-09	1.33E-10	1.34E-10	1.34E-10	5.20E-08	3.35E-12	5.14E-06
117-84-0	di-n-octyl phthalate	1.71E-09	1.38E-12	1.38E-12	1.38E-12	6.96E-05	5.27E-13	6.95E-03
74-84-0	ethane	1.09E-13	3.80E-13	3.80E-13	3.80E-13	2.28E-12	5.31E-15	1.89E-10
505-60-2	H	1.63E-13	2.56E-13	2.56E-13	2.56E-13	7.63E-11	1.48E-15	7.37E-09
74-82-8	methane	6.24E-15	5.67E-14	5.67E-14	5.67E-14	5.71E-14	7.41E-14	6.15E-14
91-20-3	naphthalene	6.28E-09	3.01E-09	3.01E-09	3.01E-09	3.09E-09	1.69E-11	1.18E-08
108-88-3	toluene	3.04E-13	3.26E-13	3.26E-13	3.26E-13	1.87E-11	2.36E-13	1.84E-09
75-69-4	trichlorofluoromethane	3.26E-16	4.53E-16	4.53E-16	4.53E-16	1.85E-14	2.65E-16	1.81E-12
35822-46-9	1,2,3,4,6,7,8-HpCDD	6.25E-13	5.75E-16	5.75E-16	5.75E-16	4.02E-13	3.41E-15	4.51E-12
3268-87-9	1,2,3,4,6,7,8,9-OCDD	3.83E-12	2.70E-15	2.70E-15	2.70E-15	2.46E-12	1.88E-14	2.76E-11
67562-39-4	1,2,3,4,6,7,8-HpCDF	3.64E-13	7.45E-16	7.45E-16	7.45E-16	2.35E-13	2.72E-15	2.62E-12
39001-02-0	1,2,3,4,6,7,8,9-OCDF	1.24E-12	1.14E-15	1.14E-15	1.14E-15	7.98E-13	9.64E-15	8.94E-12
7664-41-7	ammonia	1.73E-14	4.93E-13	4.93E-13	4.93E-13	4.93E-13	8.77E-13	4.93E-13
7782-50-5	chlorine	2.72E-09	2.28E-08	2.28E-08	2.28E-08	2.28E-08		2.28E-08
7647-01-0	hydrogen chloride	3.74E-07						
7487-94-7	mercuric chloride	1.86E-06	2.69E-08			1.02E-06	6.68E-08	1.05E-06
7439-97-6	elemental mercury	4.92E-12						

CALCULATIONS FOR LAND BASED MEDIA CONCENTRATIONS
TDC TECHNOLOGY
("Fmax" for Adult Cancer Risks)

CAS No.	COPC Name	Ps	Pr_g	Abeef	Amilk	Apork	Aegg	Achicken
		mg/kg	mg/kg	mg/kg	mg/kg	mg/kg	mg/kg	mg/kg
123-91-1	1,4-dioxane	1.08E-05	3.14E-10	9.29E-09	2.95E-09	4.86E-10	7.08E-16	1.24E-15
78-93-3	2-butanone	3.88E-10	2.66E-10	5.88E-13	2.02E-13	1.82E-13	2.38E-15	4.16E-15
67-64-1	acetone	1.83E-09	1.14E-09	7.81E-13	2.66E-13	2.20E-13	2.78E-15	4.86E-15
71-43-2	benzene	4.43E-11	4.98E-14	3.01E-12	9.61E-13	2.54E-13	1.48E-17	2.60E-17
117-81-7	bis(2-ethylhexyl)-phthalate	2.27E-04	3.92E-10	1.84E-04	5.88E-05	1.54E-05	4.63E-12	8.11E-12
74-87-3	chloromethane	3.94E-13	6.65E-15	3.21E-15	1.03E-15	2.83E-16	2.31E-19	4.05E-19
75-71-8	dichlorodifluoromethane	3.15E-13	6.74E-14	2.14E-14	6.95E-15	3.02E-15	2.20E-17	3.86E-17
84-74-2	di-n-butyl phthalate	2.57E-06	1.34E-10	1.88E-06	6.00E-07	1.58E-07	1.02E-12	1.78E-12
117-84-0	di-n-octyl phthalate	3.47E-03	1.38E-12	5.42E-04	1.73E-04	4.57E-05	1.24E-13	2.17E-13
74-84-0	ethane	9.47E-11	3.80E-13	4.07E-12	1.30E-12	3.48E-13	7.07E-17	1.24E-16
505-60-2	H	3.68E-09	2.56E-13	3.91E-10	1.25E-10	3.30E-11	1.22E-16	2.13E-16
74-82-8	methane	5.81E-14	5.67E-14	4.22E-16			1.15E-19	2.30E-19
91-20-3	naphthalene	7.38E-09	3.01E-09	1.88E-09	6.16E-10	4.06E-10	4.62E-12	8.09E-12
108-88-3	toluene	9.20E-10	3.26E-13	1.42E-10	4.54E-11	1.20E-11	2.33E-16	4.07E-16
75-69-4	trichlorofluoromethane	9.05E-13	4.53E-16	1.08E-13	3.46E-14	9.15E-15	2.45E-19	4.29E-19
35822-46-9	1,2,3,4,6,7,8-HpCDD	1.33E-12	5.75E-16	3.79E-13	1.20E-13	2.22E-14	5.12E-17	8.96E-17
3268-87-9	1,2,3,4,6,7,8,9-OCDD	8.12E-12	2.70E-15	1.82E-12	5.75E-13	1.06E-13	2.45E-16	4.28E-16
67562-39-4	1,2,3,4,6,7,8-HpCDF	7.73E-13	7.45E-16	4.14E-13	1.31E-13	2.42E-14	5.63E-17	9.86E-17
39001-02-0	1,2,3,4,6,7,8,9-OCDF	2.63E-12	1.14E-15	7.53E-13	2.39E-13	4.40E-14	1.02E-16	1.78E-16
7664-41-7	ammonia	4.93E-13	4.93E-13	5.23E-16	2.00E-16	2.32E-16	3.96E-18	6.92E-18
7782-50-5	chlorine	2.28E-08	2.28E-08	9.71E-11	3.52E-11	4.72E-11	7.01E-13	1.23E-12
7647-01-0	hydrogen chloride			9.79E-12	1.65E-12	8.77E-12	1.81E-13	3.17E-13
7487-94-7	mercuric chloride	5.14E-07	1.73E-08	5.99E-08	3.80E-08	4.96E-11	1.06E-09	1.06E-09
7439-97-6	elemental mercury							

COPC INTAKE AND CANCER RISK ESTIMATES
TDC TECHNOLOGY
(Adult Resident)

CAS No.	COPC Name	Isoil mg/kg/day	Iproduce mg/kg/day	Idw mg/kg/day	I_oral mg/kg/day	I_inh mg/kg/day	Cancer soil	Cancer produce	Cancer drinking water	Cancer oral	Cancer inhalation
123-91-1	1,4-dioxane	2.91E-15	1.40E-09	3.69E-10	1.77E-09	8.82E-09	1.3E-17	6.3E-12	1.7E-12	8.0E-12	2.4E-10
78-93-3	2-butanone	2.46E-15	1.90E-11	4.35E-10	4.54E-10	1.69E-08					
67-64-1	acetone	1.06E-14	1.35E-10	6.80E-09	6.94E-09	2.43E-07					
71-43-2	benzene	1.63E-18	2.65E-15	5.26E-12	5.26E-12	7.21E-09	3.7E-20	6.0E-17	1.2E-13	1.2E-13	2.0E-10
117-81-7	bis(2-ethylhexyl)-phthalate	6.12E-13	3.52E-10	6.18E-11	4.14E-10	3.23E-09	3.5E-15	2.0E-12	3.6E-13	2.4E-12	2.7E-11
74-87-3	chloromethane	6.17E-20	1.06E-15	8.56E-13	8.57E-13	1.84E-09					
75-71-8	dichlorodifluoromethane	2.39E-18	3.45E-15	2.45E-13	2.49E-13	2.13E-09					
84-74-2	di-n-butyl phthalate	1.23E-13	6.11E-12	2.85E-11	3.47E-11	2.30E-10					
117-84-0	di-n-octyl phthalate	1.13E-13	5.95E-11	1.57E-13	5.97E-11	3.24E-09					
74-84-0	ethane	8.50E-18	1.94E-14	3.28E-10	3.29E-10	2.80E-06					
505-60-2	H	1.27E-17	1.38E-14	4.73E-11	4.73E-11	1.65E-09	4.0E-17	4.4E-14	1.5E-10	1.5E-10	2.3E-08
74-82-8	methane	4.86E-19	3.44E-15	1.16E-10	1.16E-10	1.18E-06					
91-20-3	naphthalene	4.24E-13	1.32E-10	4.86E-11	1.81E-10	3.22E-09					3.9E-10
108-88-3	toluene	2.37E-17	1.83E-14	2.61E-11	2.61E-11	4.06E-08					
75-69-4	trichlorofluoromethane	2.54E-20	2.50E-17	1.80E-13	1.80E-13	9.58E-10					
35822-46-9	1,2,3,4,6,7,8-HpCDD	7.67E-19	1.29E-16	6.89E-20	1.30E-16	1.08E-15					
3268-87-9	1,2,3,4,6,7,8,9-OCDD	4.69E-18	7.91E-16	2.66E-19	7.96E-16	6.61E-15					
67562-39-4	1,2,3,4,6,7,8-HpCDF	4.46E-19	7.58E-17	1.59E-19	7.64E-17	6.29E-16					
39001-02-0	1,2,3,4,6,7,8,9-OCDF	1.52E-18	2.57E-16	1.37E-19	2.59E-16	2.14E-15					
7664-41-7	ammonia	1.34E-18	3.16E-14	2.25E-11	2.25E-11	7.36E-10					
7782-50-5	chlorine	2.09E-13	1.14E-09	3.85E-09	4.99E-09	8.79E-09					
7647-01-0	hydrogen chloride	2.88E-11		5.76E-07	5.76E-07	2.64E-08					
7487-94-7	mercuric chloride	1.35E-12	1.92E-11	5.55E-12	2.61E-11	9.17E-11					
7439-97-6	elemental mercury	2.61E-16		4.79E-14	4.82E-14	9.58E-11					
TOTAL		**N/A**	**N/A**	**N/A**	**N/A**	**N/A**	**3.58E-15**	**8.42E-12**	**1.52E-10**	**1.60E-10**	**2.41E-08**

COPC INTAKE AND CANCER RISK ESTIMATES
TDC TECHNOLOGY
(Child Resident)

CAS No.	COPC Name	Isoil mg/kg/day	Iproduce mg/kg/day	Idw mg/kg/day	I_oral mg/kg/day	I_inh mg/kg/day
123-91-1	1,4-dioxane	2.72E-14	3.12E-09	8.25E-10	3.95E-09	4.93E-09
78-93-3	2-butanone	2.30E-14	4.19E-11	9.72E-10	1.01E-09	9.46E-09
67-64-1	acetone	9.86E-14	2.67E-10	1.52E-08	1.55E-08	1.36E-07
71-43-2	benzene	1.53E-17	6.37E-15	1.17E-11	1.18E-11	4.03E-09
117-81-7	bis(2-ethylhexyl)-phthalate	5.71E-12	8.47E-10	1.38E-10	9.91E-10	1.80E-09
74-87-3	chloromethane	5.76E-19	2.01E-15	1.91E-12	1.91E-12	1.03E-09
75-71-8	dichlorodifluoromethane	2.23E-17	8.39E-15	5.48E-13	5.56E-13	1.19E-09
84-74-2	di-n-butyl phthalate	1.15E-12	1.49E-11	6.36E-11	7.96E-11	1.29E-10
117-84-0	di-n-octyl phthalate	1.05E-12	1.43E-10	3.50E-13	1.44E-10	1.81E-09
74-84-0	ethane	7.94E-17	4.72E-14	7.34E-10	7.34E-10	1.56E-06
505-60-2	H	1.18E-16	3.36E-14	1.06E-10	1.06E-10	9.23E-10
74-82-8	methane	4.53E-18	7.94E-15	2.59E-10	2.59E-10	6.59E-07
91-20-3	naphthalene	3.95E-12	3.23E-10	1.09E-10	4.35E-10	1.80E-09
108-88-3	toluene	2.21E-16	4.32E-14	5.83E-11	5.84E-11	2.27E-08
75-69-4	trichlorofluoromethane	2.37E-19	5.93E-17	4.03E-13	4.03E-13	5.35E-10
35822-46-9	1,2,3,4,6,7,8-HpCDD	7.15E-18	3.11E-16	1.54E-19	3.18E-16	6.03E-16
3268-87-9	1,2,3,4,6,7,8,9-OCDD	4.38E-17	1.90E-15	5.95E-19	1.95E-15	3.69E-15
67562-39-4	1,2,3,4,6,7,8-HpCDF	4.17E-18	1.82E-16	3.54E-19	1.87E-16	3.51E-16
39001-02-0	1,2,3,4,6,7,8,9-OCDF	1.42E-17	6.18E-16	3.05E-19	6.32E-16	1.20E-15
7664-41-7	ammonia	1.25E-17	7.19E-14	5.03E-11	5.03E-11	4.11E-10
7782-50-5	chlorine	1.95E-12	2.79E-09	8.60E-09	1.14E-08	4.91E-09
7647-01-0	hydrogen chloride	2.69E-10		1.29E-06	1.29E-06	1.48E-08
7487-94-7	mercuric chloride	1.26E-11	4.29E-11	1.24E-11	6.79E-11	5.12E-11
7439-97-6	elemental mercury	2.44E-15		1.07E-13	1.10E-13	5.35E-11
TOTAL		**N/A**	**N/A**	**N/A**	**N/A**	**N/A**

COPC INTAKE AND CANCER RISK ESTIMATES
TDC TECHNOLOGY
(Child Resident)

CAS No.	COPC Name	Cancer soil	Cancer produce	Cancer drinking water	Cancer oral	Cancer inhalation
123-91-1	1,4-dioxane	2.46E-17	2.82E-12	7.46E-13	3.57E-12	4.78E-11
78-93-3	2-butanone					
67-64-1	acetone					
71-43-2	benzene	6.90E-20	2.88E-17	5.31E-14	5.31E-14	3.91E-11
117-81-7	bis(2-ethylhexyl)-phthalate	6.58E-15	9.75E-13	1.59E-13	1.14E-12	5.44E-12
74-87-3	chloromethane					
75-71-8	dichlorodifluoromethane					
84-74-2	di-n-butyl phthalate					
117-84-0	di-n-octyl phthalate					
74-84-0	ethane					
505-60-2	H	7.48E-17	2.13E-14	6.69E-11	6.69E-11	4.64E-09
74-82-8	methane					
91-20-3	naphthalene					7.77E-11
108-88-3	toluene					
75-69-4	trichlorofluoromethane					
35822-46-9	1,2,3,4,6,7,8-HpCDD					
3268-87-9	1,2,3,4,6,7,8,9-OCDD					
67562-39-4	1,2,3,4,6,7,8-HpCDF					
39001-02-0	1,2,3,4,6,7,8,9-OCDF					
7664-41-7	ammonia					
7782-50-5	chlorine					
7647-01-0	hydrogen chloride					
7487-94-7	mercuric chloride					
7439-97-6	elemental mercury					
TOTAL		**6.67E-15**	**3.82E-12**	**6.78E-11**	**7.17E-11**	**4.81E-09**

COPC INTAKE AND CANCER RISK ESTIMATES
TDC TECHNOLOGY
(Fisher)

CAS No.	COPC Name	Isoil mg/kg/day	Iproduce mg/kg/day	Idw mg/kg/day	Ifish mg/kg/day	I_oral mg/kg/day	I_inh mg/kg/day
123-91-1	1,4-dioxane	2.91E-15	1.40E-09	3.69E-10	1.09E-12	1.77E-09	8.82E-09
78-93-3	2-butanone	2.46E-15	1.90E-11	4.35E-10	5.92E-12	4.60E-10	1.69E-08
67-64-1	acetone	1.06E-14	1.35E-10	6.80E-09	1.28E-10	7.07E-09	2.43E-07
71-43-2	benzene	1.63E-18	2.65E-15	5.26E-12	1.04E-13	5.37E-12	7.21E-09
117-81-7	bis(2-ethylhexyl)-phthalate	6.12E-13	3.52E-10	6.18E-11	4.86E-11	4.63E-10	3.23E-09
74-87-3	chloromethane	6.17E-20	1.06E-15	8.56E-13	5.36E-15	8.63E-13	1.84E-09
75-71-8	dichlorodifluoromethane	2.39E-18	3.45E-15	2.45E-13	7.05E-15	2.56E-13	2.13E-09
84-74-2	di-n-butyl phthalate	1.23E-13	6.11E-12	2.85E-11	2.23E-10	2.58E-10	2.30E-10
117-84-0	di-n-octyl phthalate	1.13E-13	5.95E-11	1.57E-13	6.40E-13	6.04E-11	3.24E-09
74-84-0	ethane	8.50E-18	1.94E-14	3.28E-10	6.93E-12	3.35E-10	2.80E-06
505-60-2	H	1.27E-17	1.38E-14	4.73E-11	3.59E-12	5.09E-11	1.65E-09
74-82-8	methane	4.86E-19	3.44E-15	1.16E-10	8.05E-13	1.17E-10	1.18E-06
91-20-3	naphthalene	4.24E-13	1.32E-10	4.86E-11	7.64E-12	1.89E-10	3.22E-09
108-88-3	toluene	2.37E-17	1.83E-14	2.61E-11	1.41E-12	2.75E-11	4.06E-08
75-69-4	trichlorofluoromethane	2.54E-20	2.50E-17	1.80E-13	8.98E-15	1.89E-13	9.58E-10
35822-46-9	1,2,3,4,6,7,8-HpCDD	7.67E-19	1.29E-16	6.89E-20	1.54E-17	1.46E-16	1.08E-15
3268-87-9	1,2,3,4,6,7,8,9-OCDD	4.69E-18	7.91E-16	2.66E-19	1.90E-18	7.98E-16	6.61E-15
67562-39-4	1,2,3,4,6,7,8-HpCDF	4.46E-19	7.58E-17	1.59E-19	8.43E-18	8.48E-17	6.29E-16
39001-02-0	1,2,3,4,6,7,8,9-OCDF	1.52E-18	2.57E-16	1.37E-19	6.10E-19	2.59E-16	2.14E-15
7664-41-7	ammonia	1.34E-18	3.16E-14	2.25E-11	1.25E-12	2.38E-11	7.36E-10
7782-50-5	chlorine	2.09E-13	1.14E-09	3.85E-09	4.90E-11	5.04E-09	8.79E-09
7647-01-0	hydrogen chloride	2.88E-11		5.76E-07	6.76E-09	5.83E-07	2.64E-08
7487-94-7	mercuric chloride	1.35E-12	1.92E-11	5.55E-12		2.61E-11	9.17E-11
7439-97-6	elemental mercury	2.61E-16		4.79E-14		4.82E-14	9.58E-11
TOTAL		**N/A**	**N/A**	**N/A**	**N/A**	**N/A**	**N/A**

COPC INTAKE AND CANCER RISK ESTIMATES
TDC TECHNOLOGY
(Fisher)

CAS No.	COPC Name	Cancer soil	Cancer produce	Cancer drinking water	Cancer fish	Cancer oral	Cancer inhalation
123-91-1	1,4-dioxane	1.32E-17	6.35E-12	1.67E-12	4.91E-15	8.02E-12	2.39E-10
78-93-3	2-butanone						
67-64-1	acetone						
71-43-2	benzene	3.69E-20	5.99E-17	1.19E-13	2.35E-15	1.21E-13	1.96E-10
117-81-7	bis(2-ethylhexyl)-phthalate	3.52E-15	2.02E-12	3.55E-13	2.80E-13	2.66E-12	2.72E-11
74-87-3	chloromethane						
75-71-8	dichlorodifluoromethane						
84-74-2	di-n-butyl phthalate						
117-84-0	di-n-octyl phthalate						
74-84-0	ethane						
505-60-2	H	4.01E-17	4.37E-14	1.50E-10	1.14E-11	1.61E-10	2.32E-08
74-82-8	methane						
91-20-3	naphthalene						3.89E-10
108-88-3	toluene						
75-69-4	trichlorofluoromethane						
35822-46-9	1,2,3,4,6,7,8-HpCDD						
3268-87-9	1,2,3,4,6,7,8,9-OCDD						
67562-39-4	1,2,3,4,6,7,8-HpCDF						
39001-02-0	1,2,3,4,6,7,8,9-OCDF						
7664-41-7	ammonia						
7782-50-5	chlorine						
7647-01-0	hydrogen chloride						
7487-94-7	mercuric chloride						
7439-97-6	elemental mercury						
TOTAL		**3.58E-15**	**8.42E-12**	**1.52E-10**	**1.16E-11**	**1.72E-10**	**2.41E-08**

COPC INTAKE AND CANCER RISK ESTIMATES
TDC TECHNOLOGY
(Fisher Child)

CAS No.	COPC Name	Isoil mg/kg/day	Iproduce mg/kg/day	Idw mg/kg/day	Ifish mg/kg/day	I_oral mg/kg/day	I_inh mg/kg/day
123-91-1	1,4-dioxane	2.72E-14	3.12E-09	8.25E-10	7.65E-13	3.95E-09	4.93E-09
78-93-3	2-butanone	2.30E-14	4.19E-11	9.72E-10	4.17E-12	1.02E-09	9.46E-09
67-64-1	acetone	9.86E-14	2.67E-10	1.52E-08	9.03E-11	1.56E-08	1.36E-07
71-43-2	benzene	1.53E-17	6.37E-15	1.17E-11	7.33E-14	1.18E-11	4.03E-09
117-81-7	bis(2-ethylhexyl)-phthalate	5.71E-12	8.47E-10	1.38E-10	3.42E-11	1.02E-09	1.80E-09
74-87-3	chloromethane	5.76E-19	2.01E-15	1.91E-12	3.77E-15	1.92E-12	1.03E-09
75-71-8	dichlorodifluoromethane	2.23E-17	8.39E-15	5.48E-13	4.96E-15	5.61E-13	1.19E-09
84-74-2	di-n-butyl phthalate	1.15E-12	1.49E-11	6.36E-11	1.57E-10	2.37E-10	1.29E-10
117-84-0	di-n-octyl phthalate	1.05E-12	1.43E-10	3.50E-13	4.51E-13	1.45E-10	1.81E-09
74-84-0	ethane	7.94E-17	4.72E-14	7.34E-10	4.88E-12	7.39E-10	1.56E-06
505-60-2	H	1.18E-16	3.36E-14	1.06E-10	2.53E-12	1.08E-10	9.23E-10
74-82-8	methane	4.53E-18	7.94E-15	2.59E-10	5.66E-13	2.59E-10	6.59E-07
91-20-3	naphthalene	3.95E-12	3.23E-10	1.09E-10	5.38E-12	4.40E-10	1.80E-09
108-88-3	toluene	2.21E-16	4.32E-14	5.83E-11	9.90E-13	5.94E-11	2.27E-08
75-69-4	trichlorofluoromethane	2.37E-19	5.93E-17	4.03E-13	6.32E-15	4.09E-13	5.35E-10
35822-46-9	1,2,3,4,6,7,8-HpCDD	7.15E-18	3.11E-16	1.54E-19	1.08E-17	3.29E-16	6.03E-16
3268-87-9	1,2,3,4,6,7,8,9-OCDD	4.38E-17	1.90E-15	5.95E-19	1.34E-18	1.95E-15	3.69E-15
67562-39-4	1,2,3,4,6,7,8-HpCDF	4.17E-18	1.82E-16	3.54E-19	5.93E-18	1.93E-16	3.51E-16
39001-02-0	1,2,3,4,6,7,8,9-OCDF	1.42E-17	6.18E-16	3.05E-19	4.30E-19	6.33E-16	1.20E-15
7664-41-7	ammonia	1.25E-17	7.19E-14	5.03E-11	8.80E-13	5.12E-11	4.11E-10
7782-50-5	chlorine	1.95E-12	2.79E-09	8.60E-09	3.45E-11	1.14E-08	4.91E-09
7647-01-0	hydrogen chloride	2.69E-10		1.29E-06	4.76E-09	1.29E-06	1.48E-08
7487-94-7	mercuric chloride	1.26E-11	4.29E-11	1.24E-11		6.79E-11	5.12E-11
7439-97-6	elemental mercury	2.44E-15		1.07E-13		1.10E-13	5.35E-11
TOTAL		**N/A**	**N/A**	**N/A**	**N/A**	**N/A**	**N/A**

COPC INTAKE AND CANCER RISK ESTIMATES
TDC TECHNOLOGY
(Fisher Child)

CAS No.	COPC Name	Cancer soil	Cancer produce	Cancer drinking water	Cancer fish	Cancer oral	Cancer inhalation
123-91-1	1,4-dioxane	2.46E-17	2.82E-12	7.46E-13	6.91E-16	3.57E-12	4.78E-11
78-93-3	2-butanone						
67-64-1	acetone						
71-43-2	benzene	6.90E-20	2.88E-17	5.31E-14	3.31E-16	5.35E-14	3.91E-11
117-81-7	bis(2-ethylhexyl)-phthalate	6.58E-15	9.75E-13	1.59E-13	3.94E-14	1.18E-12	5.44E-12
74-87-3	chloromethane						
75-71-8	dichlorodifluoromethane						
84-74-2	di-n-butyl phthalate						
117-84-0	di-n-octyl phthalate						
74-84-0	ethane						
505-60-2	H	7.48E-17	2.13E-14	6.69E-11	1.60E-12	6.85E-11	4.64E-09
74-82-8	methane						
91-20-3	naphthalene						7.77E-11
108-88-3	toluene						
75-69-4	trichlorofluoromethane						
35822-46-9	1,2,3,4,6,7,8-HpCDD						
3268-87-9	1,2,3,4,6,7,8,9-OCDD						
67562-39-4	1,2,3,4,6,7,8-HpCDF						
39001-02-0	1,2,3,4,6,7,8,9-OCDF						
7664-41-7	ammonia						
7782-50-5	chlorine						
7647-01-0	hydrogen chloride						
7487-94-7	mercuric chloride						
7439-97-6	elemental mercury						
TOTAL		**6.67E-15**	**3.82E-12**	**6.78E-11**	**1.64E-12**	**7.33E-11**	**4.81E-09**

COPC INTAKE AND CANCER RISK ESTIMATES
TDC TECHNOLOGY
(Farmer)

CAS No.	COPC Name	Isoil mg/kg/day	Iproduce mg/kg/day	Idw mg/kg/day	Ibeef mg/kg/day	Imilk mg/kg/day	Ipork mg/kg/day	Iegg mg/kg/day
123-91-1	1,4-dioxane	5.35E-17	1.55E-09	1.85E-10	1.13E-11	4.04E-11	2.67E-13	5.31E-19
78-93-3	2-butanone	4.53E-17	5.35E-13	3.96E-10	7.17E-16	2.76E-15	1.00E-16	1.78E-18
67-64-1	acetone	1.94E-16	3.63E-12	6.46E-09	9.53E-16	3.64E-15	1.21E-16	2.08E-18
71-43-2	benzene	3.00E-20	4.74E-16	5.24E-12	3.67E-15	1.31E-14	1.40E-16	1.11E-20
117-81-7	bis(2-ethylhexyl)-phthalate	1.28E-14	2.60E-09	5.91E-11	2.25E-07	8.04E-07	8.46E-09	3.48E-15
74-87-3	chloromethane	1.13E-21	3.88E-16	8.55E-13	3.91E-18	1.40E-17	1.56E-19	1.74E-22
75-71-8	dichlorodifluoromethane	4.39E-20	7.80E-17	2.38E-13	2.61E-17	9.49E-17	1.66E-18	1.65E-20
84-74-2	di-n-butyl phthalate	2.57E-15	2.45E-11	2.73E-11	2.29E-09	8.20E-09	8.71E-11	7.63E-16
117-84-0	di-n-octyl phthalate	2.44E-15	3.27E-08	1.55E-13	6.62E-07	2.37E-06	2.52E-08	9.30E-17
74-84-0	ethane	1.56E-19	1.32E-15	3.28E-10	4.96E-15	1.78E-14	1.91E-16	5.30E-20
505-60-2	H	2.33E-19	3.60E-14	4.73E-11	4.77E-13	1.71E-12	1.81E-14	9.11E-20
74-82-8	methane	8.92E-21	7.57E-17	1.16E-10	5.15E-19			8.61E-23
91-20-3	naphthalene	8.97E-15	3.38E-12	4.23E-11	2.29E-12	8.42E-12	2.23E-13	3.47E-15
108-88-3	toluene	4.35E-19	9.05E-15	2.60E-11	1.74E-13	6.21E-13	6.60E-15	1.75E-19
75-69-4	trichlorofluoromethane	4.66E-22	9.05E-18	1.80E-13	1.32E-16	4.73E-16	5.03E-18	1.84E-22
35822-46-9	1,2,3,4,6,7,8-HpCDD	8.93E-19	1.90E-16	7.13E-20	4.63E-16	1.64E-15	1.22E-17	3.84E-20
3268-87-9	1,2,3,4,6,7,8,9-OCDD	5.47E-18	1.16E-15	2.75E-19	2.21E-15	7.87E-15	5.84E-17	1.84E-19
67562-39-4	1,2,3,4,6,7,8-HpCDF	5.19E-19	1.11E-16	1.64E-19	5.05E-16	1.79E-15	1.33E-17	4.23E-20
39001-02-0	1,2,3,4,6,7,8,9-OCDF	1.77E-18	3.77E-16	1.41E-19	9.18E-16	3.26E-15	2.42E-17	7.63E-20
7664-41-7	ammonia	2.47E-20	6.96E-16	2.24E-11	6.38E-19	2.74E-18	1.28E-19	2.97E-21
7782-50-5	chlorine	3.88E-15	2.53E-11	1.58E-10	1.19E-13	4.81E-13	2.59E-14	5.25E-16
7647-01-0	hydrogen chloride	5.35E-13		2.33E-08	1.19E-14	2.25E-14	4.82E-15	1.36E-16
7487-94-7	mercuric chloride	2.65E-12	5.10E-10	5.93E-12	7.31E-11	5.19E-10	2.73E-14	7.94E-13
7439-97-6	elemental mercury	7.02E-18		4.75E-14				
TOTAL		**N/A**	**N/A**	**N/A**	**N/A**	**N/A**	**N/A**	**N/A**

COPC INTAKE AND CANCER RISK ESTIMATES
TDC TECHNOLOGY
(Farmer)

CAS No.	COPC Name	Ichicken mg/kg/day	I_oral mg/kg/day	I_inh mg/kg/day	Cancer soil	Cancer produce	Cancer drinking water	Cancer beef
123-91-1	1,4-dioxane	8.18E-19	1.79E-09	1.18E-08	3.22E-19	9.34E-12	1.12E-12	6.83E-14
78-93-3	2-butanone	2.75E-18	3.97E-10	2.26E-08				
67-64-1	acetone	3.21E-18	6.46E-09	3.24E-07				
71-43-2	benzene	1.71E-20	5.26E-12	9.62E-09	9.05E-22	1.43E-17	1.58E-13	1.11E-16
117-81-7	bis(2-ethylhexyl)-phthalate	5.35E-15	1.04E-06	4.30E-09	9.84E-17	1.99E-11	4.53E-13	1.72E-09
74-87-3	chloromethane	2.67E-22	8.56E-13	2.46E-09				
75-71-8	dichlorodifluoromethane	2.55E-20	2.38E-13	2.85E-09				
84-74-2	di-n-butyl phthalate	1.18E-15	1.06E-08	3.07E-10				
117-84-0	di-n-octyl phthalate	1.43E-16	3.09E-06	4.32E-09				
74-84-0	ethane	8.19E-20	3.28E-10	3.73E-06				
505-60-2	H	1.41E-19	4.95E-11	2.20E-09	9.82E-19	1.52E-13	2.00E-10	2.01E-12
74-82-8	methane	1.51E-22	1.16E-10	1.57E-06				
91-20-3	naphthalene	5.34E-15	5.66E-11	4.30E-09				
108-88-3	toluene	2.69E-19	2.68E-11	5.41E-08				
75-69-4	trichlorofluoromethane	2.83E-22	1.81E-13	1.28E-09				
35822-46-9	1,2,3,4,6,7,8-HpCDD	5.91E-20	2.31E-15	1.44E-15				
3268-87-9	1,2,3,4,6,7,8,9-OCDD	2.83E-19	1.13E-14	8.81E-15				
67562-39-4	1,2,3,4,6,7,8-HpCDF	6.51E-20	2.42E-15	8.39E-16				
39001-02-0	1,2,3,4,6,7,8,9-OCDF	1.17E-19	4.58E-15	2.86E-15				
7664-41-7	ammonia	4.57E-21	2.24E-11	9.81E-10				
7782-50-5	chlorine	8.09E-16	1.84E-10	1.17E-08				
7647-01-0	hydrogen chloride	2.10E-16	2.33E-08	3.52E-08				
7487-94-7	mercuric chloride	6.99E-13	1.11E-09	1.22E-10				
7439-97-6	elemental mercury		4.75E-14	1.28E-10				
TOTAL		**N/A**	**N/A**	**N/A**	**9.97E-17**	**2.94E-11**	**2.01E-10**	**1.72E-09**

COPC INTAKE AND CANCER RISK ESTIMATES
TDC TECHNOLOGY
(Farmer)

CAS No.	COPC Name	Cancer milk	Cancer pork	Cancer egg	Cancer chicken	Cancer oral	Cancer inhalation
123-91-1	1,4-dioxane	2.43E-13	1.61E-15	3.20E-21	4.93E-21	1.08E-11	3.19E-10
78-93-3	2-butanone						
67-64-1	acetone						
71-43-2	benzene	3.96E-16	4.22E-18	3.35E-22	5.17E-22	1.59E-13	2.61E-10
117-81-7	bis(2-ethylhexyl)-phthalate	6.16E-09	6.49E-11	2.67E-17	4.11E-17	7.97E-09	3.63E-11
74-87-3	chloromethane						
75-71-8	dichlorodifluoromethane						
84-74-2	di-n-butyl phthalate						
117-84-0	di-n-octyl phthalate						
74-84-0	ethane						
505-60-2	H	7.20E-12	7.66E-14	3.84E-19	5.93E-19	2.09E-10	3.10E-08
74-82-8	methane						
91-20-3	naphthalene						5.18E-10
108-88-3	toluene						
75-69-4	trichlorofluoromethane						
35822-46-9	1,2,3,4,6,7,8-HpCDD						
3268-87-9	1,2,3,4,6,7,8,9-OCDD						
67562-39-4	1,2,3,4,6,7,8-HpCDF						
39001-02-0	1,2,3,4,6,7,8,9-OCDF						
7664-41-7	ammonia						
7782-50-5	chlorine						
7647-01-0	hydrogen chloride						
7487-94-7	mercuric chloride						
7439-97-6	elemental mercury						
TOTAL		**6.17E-09**	**6.50E-11**	**2.70E-17**	**4.17E-17**	**8.19E-09**	**3.21E-08**

COPC INTAKE AND CANCER RISK ESTIMATES
TDC TECHNOLOGY
(Farmer Child)

CAS No.	COPC Name	Isoil mg/kg/day	Iproduce mg/kg/day	Idw mg/kg/day	Ibeef mg/kg/day	Imilk mg/kg/day	Ipork mg/kg/day	Iegg mg/kg/day
123-91-1	1,4-dioxane	2.72E-14	4.43E-09	8.25E-10	6.97E-12	6.70E-11	2.05E-13	2.08E-17
78-93-3	2-butanone	2.30E-14	5.04E-11	9.72E-10	1.36E-14	1.49E-13	3.66E-15	6.98E-17
67-64-1	acetone	9.86E-14	3.23E-10	1.52E-08	1.60E-14	1.75E-13	4.29E-15	8.17E-17
71-43-2	benzene	1.53E-17	8.58E-15	1.17E-11	2.34E-15	2.27E-14	1.29E-16	4.36E-19
117-81-7	bis(2-ethylhexyl)-phthalate	5.71E-12	6.29E-09	1.38E-10	1.38E-07	1.33E-06	6.46E-09	1.19E-13
74-87-3	chloromethane	5.76E-19	3.29E-15	1.91E-12	3.69E-18	3.74E-17	4.69E-19	6.80E-21
75-71-8	dichlorodifluoromethane	2.23E-17	9.99E-15	5.48E-13	1.36E-16	1.46E-15	3.42E-17	6.48E-19
84-74-2	di-n-butyl phthalate	1.15E-12	7.58E-11	6.36E-11	1.41E-09	1.36E-08	6.76E-11	2.62E-14
117-84-0	di-n-octyl phthalate	1.05E-12	7.87E-08	3.50E-13	4.07E-07	3.93E-06	1.92E-08	3.10E-15
74-84-0	ethane	7.94E-17	5.82E-14	7.34E-10	3.44E-15	3.37E-14	2.53E-16	2.08E-18
505-60-2	H	1.18E-16	1.24E-13	1.06E-10	2.94E-13	2.84E-12	1.40E-14	3.57E-18
74-82-8	methane	4.53E-18	9.47E-15	2.59E-10	1.62E-17			3.37E-21
91-20-3	naphthalene	3.95E-12	3.84E-10	1.09E-10	2.12E-11	2.22E-10	5.91E-12	1.18E-13
108-88-3	toluene	2.21E-16	7.23E-14	5.83E-11	1.08E-13	1.04E-12	5.39E-15	6.84E-18
75-69-4	trichlorofluoromethane	2.37E-19	9.11E-17	4.03E-13	8.25E-17	7.99E-16	4.21E-18	7.21E-21
35822-46-9	1,2,3,4,6,7,8-HpCDD	7.15E-18	4.56E-16	1.54E-19	2.84E-16	2.73E-15	9.17E-18	2.37E-20
3268-87-9	1,2,3,4,6,7,8,9-OCDD	4.38E-17	2.79E-15	5.95E-19	1.36E-15	1.30E-14	4.39E-17	1.13E-19
67562-39-4	1,2,3,4,6,7,8-HpCDF	4.17E-18	2.67E-16	3.54E-19	3.10E-16	2.97E-15	1.00E-17	2.61E-20
39001-02-0	1,2,3,4,6,7,8,9-OCDF	1.42E-17	9.05E-16	3.05E-19	5.64E-16	5.41E-15	1.82E-17	4.71E-20
7664-41-7	ammonia	1.25E-17	8.58E-14	5.03E-11	2.13E-17	2.47E-16	5.31E-18	1.16E-19
7782-50-5	chlorine	1.95E-12	3.31E-09	8.60E-09	3.92E-12	4.30E-11	1.07E-12	2.04E-14
7647-01-0	hydrogen chloride	2.69E-10		1.29E-06	3.96E-13	2.01E-12	1.98E-13	5.28E-15
7487-94-7	mercuric chloride	1.26E-11	1.17E-09	1.24E-11	4.31E-11	8.41E-10	1.56E-14	2.90E-13
7439-97-6	elemental mercury	2.44E-15		1.07E-13				
TOTAL		**N/A**	**N/A**	**N/A**	**N/A**	**N/A**	**N/A**	**N/A**

COPC INTAKE AND CANCER RISK ESTIMATES
TDC TECHNOLOGY
(Farmer Child)

CAS No.	COPC Name	Ichicken mg/kg/day	I_oral mg/kg/day	I_inh mg/kg/day	Cancer soil	Cancer produce	Cancer drinking water	Cancer beef
123-91-1	1,4-dioxane	3.04E-17	5.33E-09	4.93E-09	2.46E-17	4.01E-12	7.46E-13	6.30E-15
78-93-3	2-butanone	1.02E-16	1.02E-09	9.46E-09				
67-64-1	acetone	1.19E-16	1.55E-08	1.36E-07				
71-43-2	benzene	6.36E-19	1.18E-11	4.03E-09	6.90E-20	3.88E-17	5.31E-14	1.06E-17
117-81-7	bis(2-ethylhexyl)-phthalate	1.74E-13	1.48E-06	1.80E-09	6.58E-15	7.24E-12	1.59E-13	1.59E-10
74-87-3	chloromethane	9.92E-21	1.92E-12	1.03E-09				
75-71-8	dichlorodifluoromethane	9.45E-19	5.59E-13	1.19E-09				
84-74-2	di-n-butyl phthalate	3.82E-14	1.53E-08	1.29E-10				
117-84-0	di-n-octyl phthalate	4.52E-15	4.44E-06	1.81E-09				
74-84-0	ethane	3.04E-18	7.34E-10	1.56E-06				
505-60-2	H	5.22E-18	1.09E-10	9.23E-10	7.48E-17	7.82E-14	6.69E-11	1.86E-13
74-82-8	methane	5.62E-21	2.59E-10	6.59E-07				
91-20-3	naphthalene	1.72E-13	7.46E-10	1.80E-09				
108-88-3	toluene	9.98E-18	5.96E-11	2.27E-08				
75-69-4	trichlorofluoromethane	1.05E-20	4.04E-13	5.35E-10				
35822-46-9	1,2,3,4,6,7,8-HpCDD	3.46E-20	3.48E-15	6.03E-16				
3268-87-9	1,2,3,4,6,7,8,9-OCDD	1.65E-19	1.73E-14	3.69E-15				
67562-39-4	1,2,3,4,6,7,8-HpCDF	3.81E-20	3.57E-15	3.51E-16				
39001-02-0	1,2,3,4,6,7,8,9-OCDF	6.86E-20	6.91E-15	1.20E-15				
7664-41-7	ammonia	1.70E-19	5.04E-11	4.11E-10				
7782-50-5	chlorine	2.97E-14	1.20E-08	4.91E-09				
7647-01-0	hydrogen chloride	7.70E-15	1.29E-06	1.48E-08				
7487-94-7	mercuric chloride	2.42E-13	2.08E-09	5.12E-11				
7439-97-6	elemental mercury		1.10E-13	5.35E-11				
TOTAL		**N/A**	**N/A**	**N/A**	**6.67E-15**	**1.13E-11**	**6.78E-11**	**1.59E-10**

COPC INTAKE AND CANCER RISK ESTIMATES
TDC TECHNOLOGY
(Farmer Child)

CAS No.	COPC Name	Cancer milk	Cancer pork	Cancer egg	Cancer chicken	Cancer oral	Cancer inhalation
123-91-1	1,4-dioxane	6.06E-14	1.86E-16	1.88E-20	2.75E-20	4.82E-12	4.78E-11
78-93-3	2-butanone						
67-64-1	acetone						
71-43-2	benzene	1.02E-16	5.83E-19	1.97E-21	2.88E-21	5.32E-14	3.91E-11
117-81-7	bis(2-ethylhexyl)-phthalate	1.53E-09	7.44E-12	1.37E-16	2.00E-16	1.71E-09	5.44E-12
74-87-3	chloromethane						
75-71-8	dichlorodifluoromethane						
84-74-2	di-n-butyl phthalate						
117-84-0	di-n-octyl phthalate						
74-84-0	ethane						
505-60-2	H	1.80E-12	8.88E-15	2.26E-18	3.30E-18	6.90E-11	4.64E-09
74-82-8	methane						
91-20-3	naphthalene						7.77E-11
108-88-3	toluene						
75-69-4	trichlorofluoromethane						
35822-46-9	1,2,3,4,6,7,8-HpCDD						
3268-87-9	1,2,3,4,6,7,8,9-OCDD						
67562-39-4	1,2,3,4,6,7,8-HpCDF						
39001-02-0	1,2,3,4,6,7,8,9-OCDF						
7664-41-7	ammonia						
7782-50-5	chlorine						
7647-01-0	hydrogen chloride						
7487-94-7	mercuric chloride						
7439-97-6	elemental mercury						
TOTAL		**1.54E-09**	**7.45E-12**	**1.40E-16**	**2.04E-16**	**1.78E-09**	**4.81E-09**

PCBs, PCDDs, and PCDFs INTAKE AND CANCER RISK ESTIMATES AS 2,3,7,8 TCDD TEQ
TDC TECHNOLOGY

CAS No.	COPC Name	Adult Resident				Child Resident			
		I_oral_teq	I_inh_teq	cancer_oral	cancer_inh	I_oral_teq	I_inh_teq	cancer_oral	cancer_inh
35822-46-9	1,2,3,4,6,7,8-HpCDD	1.30E-18	1.08E-17	0.00E+00	0.00E+00	3.18E-18	6.03E-18	0.00E+00	0.00E+00
3268-87-9	1,2,3,4,6,7,8,9-OCDD	2.39E-19	1.98E-18	0.00E+00	0.00E+00	5.84E-19	1.11E-18	0.00E+00	0.00E+00
67562-39-4	1,2,3,4,6,7,8-HpCDF	7.64E-19	6.29E-18	0.00E+00	0.00E+00	1.87E-18	3.51E-18	0.00E+00	0.00E+00
39001-02-0	1,2,3,4,6,7,8,9-OCDF	7.76E-20	6.43E-19	0.00E+00	0.00E+00	1.90E-19	3.59E-19	0.00E+00	0.00E+00
TOTAL		**2.38E-18**	**1.97E-17**	**0.00E+00**	**0.00E+00**	**5.82E-18**	**1.10E-17**	**0.00E+00**	**0.00E+00**

PCBs, PCDDs, and PCDFs INTAKE AND CANCER RISK ESTIMATES AS 2,3,7,8 TCDD TEQ
TDC TECHNOLOGY

CAS No.	COPC Name	Fisher				Fisher Child			
		I_oral_teq	I_inh_teq	cancer_oral	cancer_inh	I_oral_teq	I_inh_teq	cancer_oral	cancer_inh
35822-46-9	1,2,3,4,6,7,8-HpCDD	1.46E-18	1.08E-17	0.00E+00	0.00E+00	3.29E-18	6.03E-18	0.00E+00	0.00E+00
3268-87-9	1,2,3,4,6,7,8,9-OCDD	2.39E-19	1.98E-18	0.00E+00	0.00E+00	5.84E-19	1.11E-18	0.00E+00	0.00E+00
67562-39-4	1,2,3,4,6,7,8-HpCDF	8.48E-19	6.29E-18	0.00E+00	0.00E+00	1.93E-18	3.51E-18	0.00E+00	0.00E+00
39001-02-0	1,2,3,4,6,7,8,9-OCDF	7.78E-20	6.43E-19	0.00E+00	0.00E+00	1.90E-19	3.59E-19	0.00E+00	0.00E+00
TOTAL		**2.62E-18**	**1.97E-17**	**0.00E+00**	**0.00E+00**	**5.99E-18**	**1.10E-17**	**0.00E+00**	**0.00E+00**

PCBs, PCDDs, and PCDFs INTAKE AND CANCER RISK ESTIMATES AS 2,3,7,8 TCDD TEQ
TDC TECHNOLOGY

CAS No.	COPC Name	Farmer				Farmer Child			
		I_oral_teq	I_inh_teq	cancer_oral	cancer_inh	I_oral_teq	I_inh_teq	cancer_oral	cancer_inh
35822-46-9	1,2,3,4,6,7,8-HpCDD	2.31E-17	1.44E-17	0.00E+00	0.00E+00	3.48E-17	6.03E-18	0.00E+00	0.00E+00
3268-87-9	1,2,3,4,6,7,8,9-OCDD	3.39E-18	2.64E-18	0.00E+00	0.00E+00	5.18E-18	1.11E-18	0.00E+00	0.00E+00
67562-39-4	1,2,3,4,6,7,8-HpCDF	2.42E-17	8.39E-18	0.00E+00	0.00E+00	3.57E-17	3.51E-18	0.00E+00	0.00E+00
39001-02-0	1,2,3,4,6,7,8,9-OCDF	1.37E-18	8.57E-19	0.00E+00	0.00E+00	2.07E-18	3.59E-19	0.00E+00	0.00E+00
TOTAL		**5.21E-17**	**2.63E-17**	**0.00E+00**	**0.00E+00**	**7.77E-17**	**1.10E-17**	**0.00E+00**	**0.00E+00**

COPC INTAKE AND NONCANCER HAZARD ESTIMATES
TDC TECHNOLOGY
(Adult Resident)

CAS No.	COPC Name	Isoil mg/kg/day	Iproduce mg/kg/day	Idw mg/kg/day	I_oral mg/kg/day	I_inh mg/kg/day	I_teq mg/kg/day
123-91-1	1,4-dioxane	2.91E-15	1.40E-09	3.69E-10	1.77E-09	2.06E-08	
78-93-3	2-butanone	2.47E-15	1.90E-11	4.35E-10	4.54E-10	3.95E-08	
67-64-1	acetone	1.06E-14	1.35E-10	6.80E-09	6.94E-09	5.67E-07	
71-43-2	benzene	1.63E-18	2.65E-15	5.26E-12	5.26E-12	1.68E-08	
117-81-7	bis(2-ethylhexyl)-phthalate	6.98E-13	3.54E-10	6.21E-11	4.17E-10	7.53E-09	
74-87-3	chloromethane	6.17E-20	1.06E-15	8.56E-13	8.57E-13	4.30E-09	
75-71-8	dichlorodifluoromethane	2.39E-18	3.45E-15	2.45E-13	2.49E-13	4.98E-09	
84-74-2	di-n-butyl phthalate	1.40E-13	6.94E-12	2.86E-11	3.57E-11	5.38E-10	
117-84-0	di-n-octyl phthalate	1.33E-13	5.95E-11	1.57E-13	5.98E-11	7.56E-09	
74-84-0	ethane	8.50E-18	1.94E-14	3.28E-10	3.29E-10	6.53E-06	
505-60-2	H	1.27E-17	1.38E-14	4.73E-11	4.73E-11	3.85E-09	
74-82-8	methane	4.86E-19	3.44E-15	1.16E-10	1.16E-10	2.75E-06	
91-20-3	naphthalene	4.88E-13	1.52E-10	4.96E-11	2.02E-10	7.52E-09	
108-88-3	toluene	2.37E-17	1.83E-14	2.61E-11	2.61E-11	9.47E-08	
75-69-4	trichlorofluoromethane	2.54E-20	2.50E-17	1.80E-13	1.80E-13	2.23E-09	
35822-46-9	1,2,3,4,6,7,8-HpCDD	1.53E-18	1.30E-16	8.32E-20	1.32E-16	2.52E-15	2.65E-17
3268-87-9	1,2,3,4,6,7,8,9-OCDD	9.35E-18	7.95E-16	3.21E-19	8.05E-16	1.54E-14	4.87E-18
67562-39-4	1,2,3,4,6,7,8-HpCDF	8.89E-19	7.67E-17	1.92E-19	7.78E-17	1.47E-15	1.55E-17
39001-02-0	1,2,3,4,6,7,8,9-OCDF	3.03E-18	2.59E-16	1.65E-19	2.62E-16	5.00E-15	1.58E-18
7664-41-7	ammonia	1.34E-18	3.16E-14	2.25E-11	2.25E-11	1.72E-09	
7782-50-5	chlorine	2.12E-13	1.15E-09	3.89E-09	5.04E-09	2.05E-08	
7647-01-0	hydrogen chloride	2.91E-11		5.82E-07	5.82E-07	6.17E-08	
7487-94-7	mercuric chloride	2.69E-12	3.66E-11	5.95E-12	4.52E-11	2.14E-10	
7439-97-6	elemental mercury	3.63E-16		4.81E-14	4.85E-14	2.24E-10	
TOTAL		**N/A**	**N/A**	**N/A**	**N/A**	**N/A**	**N/A**

COPC INTAKE AND NONCANCER HAZARD ESTIMATES
TDC TECHNOLOGY
(Adult Resident)

CAS No.	COPC Name	HQ_soil	HQ_produce	HQ_dw	HQ_oral	HQ_inhalation
123-91-1	1,4-dioxane	2.79E-14	1.35E-08	3.54E-09	1.70E-08	2.40E-08
78-93-3	2-butanone	3.94E-15	3.04E-11	6.96E-10	7.26E-10	2.78E-08
67-64-1	acetone	1.13E-14	1.43E-10	7.25E-09	7.39E-09	6.32E-07
71-43-2	benzene	3.92E-16	6.35E-13	1.26E-09	1.26E-09	1.97E-06
117-81-7	bis(2-ethylhexyl)-phthalate	3.35E-11	1.70E-08	2.98E-09	2.00E-08	
74-87-3	chloromethane	2.28E-18	3.90E-14	3.16E-11	3.16E-11	1.68E-07
75-71-8	dichlorodifluoromethane	1.15E-17	1.66E-14	1.18E-12	1.19E-12	1.75E-07
84-74-2	di-n-butyl phthalate	1.34E-12	6.66E-11	2.75E-10	3.43E-10	
117-84-0	di-n-octyl phthalate					
74-84-0	ethane					
505-60-2	H	1.74E-12	1.89E-09	6.48E-06	6.48E-06	6.45E-04
74-82-8	methane					
91-20-3	naphthalene	2.34E-11	7.30E-09	2.38E-09	9.70E-09	8.78E-06
108-88-3	toluene	2.84E-16	2.19E-13	3.13E-10	3.13E-10	6.66E-08
75-69-4	trichlorofluoromethane	8.11E-20	7.98E-17	5.76E-13	5.76E-13	1.12E-08
35822-46-9	1,2,3,4,6,7,8-HpCDD					
3268-87-9	1,2,3,4,6,7,8,9-OCDD					
67562-39-4	1,2,3,4,6,7,8-HpCDF					
39001-02-0	1,2,3,4,6,7,8,9-OCDF					
7664-41-7	ammonia					6.03E-08
7782-50-5	chlorine	2.03E-12	1.11E-08	3.73E-08	4.84E-08	4.98E-04
7647-01-0	hydrogen chloride					1.08E-05
7487-94-7	mercuric chloride	8.60E-09	1.17E-07	1.90E-08	1.45E-07	2.51E-05
7439-97-6	elemental mercury					2.62E-06
TOTAL		**8.66E-09**	**1.68E-07**	**6.56E-06**	**6.73E-06**	**1.19E-03**

COPC INTAKE AND NONCANCER HAZARD ESTIMATES
TDC TECHNOLOGY
(Child Resident)

CAS No.	COPC Name	Isoil mg/kg/day	Iproduce mg/kg/day	Idw mg/kg/day	I_oral mg/kg/day	I_inh mg/kg/day	I_teq mg/kg/day
123-91-1	1,4-dioxane	2.72E-14	3.12E-09	8.25E-10	3.95E-09	5.75E-08	
78-93-3	2-butanone	2.30E-14	4.20E-11	9.72E-10	1.01E-09	1.10E-07	
67-64-1	acetone	9.87E-14	2.67E-10	1.52E-08	1.55E-08	1.58E-06	
71-43-2	benzene	1.53E-17	6.37E-15	1.17E-11	1.18E-11	4.70E-08	
117-81-7	bis(2-ethylhexyl)-phthalate	6.52E-12	8.53E-10	1.39E-10	9.98E-10	2.10E-08	
74-87-3	chloromethane	5.76E-19	2.01E-15	1.91E-12	1.91E-12	1.20E-08	
75-71-8	dichlorodifluoromethane	2.23E-17	8.39E-15	5.48E-13	5.56E-13	1.39E-08	
84-74-2	di-n-butyl phthalate	1.31E-12	1.69E-11	6.40E-11	8.22E-11	1.50E-09	
117-84-0	di-n-octyl phthalate	1.24E-12	1.43E-10	3.51E-13	1.45E-10	2.11E-08	
74-84-0	ethane	7.94E-17	4.72E-14	7.34E-10	7.34E-10	1.82E-05	
505-60-2	H	1.18E-16	3.36E-14	1.06E-10	1.06E-10	1.08E-08	
74-82-8	methane	4.53E-18	7.94E-15	2.59E-10	2.59E-10	7.69E-06	
91-20-3	naphthalene	4.55E-12	3.72E-10	1.11E-10	4.87E-10	2.10E-08	
108-88-3	toluene	2.21E-16	4.32E-14	5.83E-11	5.84E-11	2.64E-07	
75-69-4	trichlorofluoromethane	2.37E-19	5.93E-17	4.03E-13	4.03E-13	6.24E-09	
35822-46-9	1,2,3,4,6,7,8-HpCDD	1.43E-17	3.13E-16	1.86E-19	3.27E-16	7.04E-15	7.37E-17
3268-87-9	1,2,3,4,6,7,8,9-OCDD	8.72E-17	1.91E-15	7.18E-19	2.00E-15	4.31E-14	1.35E-17
67562-39-4	1,2,3,4,6,7,8-HpCDF	8.30E-18	1.84E-16	4.28E-19	1.93E-16	4.10E-15	4.29E-17
39001-02-0	1,2,3,4,6,7,8,9-OCDF	2.83E-17	6.22E-16	3.69E-19	6.50E-16	1.40E-14	4.38E-18
7664-41-7	ammonia	1.25E-17	7.19E-14	5.03E-11	5.03E-11	4.80E-09	
7782-50-5	chlorine	1.97E-12	2.82E-09	8.69E-09	1.15E-08	5.73E-08	
7647-01-0	hydrogen chloride	2.72E-10		1.30E-06	1.30E-06	1.72E-07	
7487-94-7	mercuric chloride	2.51E-11	8.17E-11	1.33E-11	1.20E-10	5.97E-10	
7439-97-6	elemental mercury	3.39E-15		1.08E-13	1.11E-13	6.24E-10	
TOTAL		**N/A**	**N/A**	**N/A**	**N/A**	**N/A**	**N/A**

COPC INTAKE AND NONCANCER HAZARD ESTIMATES
TDC TECHNOLOGY
(Child Resident)

CAS No.	COPC Name	HQ_soil	HQ_produce	HQ_dw	HQ_oral	HQ_inhalation
123-91-1	1,4-dioxane	2.61E-13	2.99E-08	7.91E-09	3.78E-08	2.40E-08
78-93-3	2-butanone	3.68E-14	6.71E-11	1.55E-09	1.62E-09	2.78E-08
67-64-1	acetone	1.05E-13	2.85E-10	1.62E-08	1.65E-08	6.32E-07
71-43-2	benzene	3.66E-15	1.53E-12	2.82E-09	2.82E-09	1.97E-06
117-81-7	bis(2-ethylhexyl)-phthalate	3.12E-10	4.09E-08	6.65E-09	4.79E-08	
74-87-3	chloromethane	2.13E-17	7.39E-14	7.05E-11	7.06E-11	1.68E-07
75-71-8	dichlorodifluoromethane	1.07E-16	4.02E-14	2.63E-12	2.67E-12	1.75E-07
84-74-2	di-n-butyl phthalate	1.25E-11	1.62E-10	6.14E-10	7.88E-10	
117-84-0	di-n-octyl phthalate					
74-84-0	ethane					
505-60-2	H	1.62E-11	4.61E-09	1.45E-05	1.45E-05	6.45E-04
74-82-8	methane					
91-20-3	naphthalene	2.18E-10	1.78E-08	5.31E-09	2.33E-08	8.78E-06
108-88-3	toluene	2.65E-15	5.18E-13	6.99E-10	7.00E-10	6.66E-08
75-69-4	trichlorofluoromethane	7.57E-19	1.90E-16	1.29E-12	1.29E-12	1.12E-08
35822-46-9	1,2,3,4,6,7,8-HpCDD					
3268-87-9	1,2,3,4,6,7,8,9-OCDD					
67562-39-4	1,2,3,4,6,7,8-HpCDF					
39001-02-0	1,2,3,4,6,7,8,9-OCDF					
7664-41-7	ammonia					6.03E-08
7782-50-5	chlorine	1.89E-11	2.70E-08	8.33E-08	1.10E-07	4.98E-04
7647-01-0	hydrogen chloride					1.08E-05
7487-94-7	mercuric chloride	8.03E-08	2.61E-07	4.24E-08	3.84E-07	2.51E-05
7439-97-6	elemental mercury					2.62E-06
TOTAL		**8.08E-08**	**3.82E-07**	**1.46E-05**	**1.51E-05**	**1.19E-03**

COPC INTAKE AND NONCANCER HAZARD ESTIMATES
TDC TECHNOLOGY
(Fisher)

CAS No.	COPC Name	Isoil mg/kg/day	Iproduce mg/kg/day	Idw mg/kg/day	Ifish mg/kg/day	I_oral mg/kg/day	I_inh mg/kg/day	I_teq mg/kg/day
123-91-1	1,4-dioxane	2.91E-15	1.40E-09	3.69E-10	1.09E-12	1.78E-09	2.06E-08	
78-93-3	2-butanone	2.47E-15	1.90E-11	4.35E-10	5.92E-12	4.60E-10	3.95E-08	
67-64-1	acetone	1.06E-14	1.35E-10	6.80E-09	1.28E-10	7.07E-09	5.67E-07	
71-43-2	benzene	1.63E-18	2.65E-15	5.26E-12	1.04E-13	5.37E-12	1.68E-08	
117-81-7	bis(2-ethylhexyl)-phthalate	6.98E-13	3.54E-10	6.21E-11	4.90E-11	4.66E-10	7.53E-09	
74-87-3	chloromethane	6.17E-20	1.06E-15	8.56E-13	5.36E-15	8.63E-13	4.30E-09	
75-71-8	dichlorodifluoromethane	2.39E-18	3.45E-15	2.45E-13	7.05E-15	2.56E-13	4.98E-09	
84-74-2	di-n-butyl phthalate	1.40E-13	6.94E-12	2.86E-11	2.24E-10	2.59E-10	5.38E-10	
117-84-0	di-n-octyl phthalate	1.33E-13	5.95E-11	1.57E-13	6.43E-13	6.04E-11	7.56E-09	
74-84-0	ethane	8.50E-18	1.94E-14	3.28E-10	6.93E-12	3.35E-10	6.53E-06	
505-60-2	H	1.27E-17	1.38E-14	4.73E-11	3.59E-12	5.09E-11	3.85E-09	
74-82-8	methane	4.86E-19	3.44E-15	1.16E-10	8.05E-13	1.17E-10	2.75E-06	
91-20-3	naphthalene	4.88E-13	1.52E-10	4.96E-11	7.88E-12	2.10E-10	7.52E-09	
108-88-3	toluene	2.37E-17	1.83E-14	2.61E-11	1.41E-12	2.75E-11	9.47E-08	
75-69-4	trichlorofluoromethane	2.54E-20	2.50E-17	1.80E-13	8.98E-15	1.89E-13	2.23E-09	
35822-46-9	1,2,3,4,6,7,8-HpCDD	1.53E-18	1.30E-16	8.32E-20	2.25E-17	1.54E-16	2.52E-15	2.68E-17
3268-87-9	1,2,3,4,6,7,8,9-OCDD	9.35E-18	7.95E-16	3.21E-19	2.78E-18	8.08E-16	1.54E-14	4.87E-18
67562-39-4	1,2,3,4,6,7,8-HpCDF	8.89E-19	7.67E-17	1.92E-19	1.24E-17	9.01E-17	1.47E-15	1.56E-17
39001-02-0	1,2,3,4,6,7,8,9-OCDF	3.03E-18	2.59E-16	1.65E-19	8.95E-19	2.63E-16	5.00E-15	1.58E-18
7664-41-7	ammonia	1.34E-18	3.16E-14	2.25E-11	1.25E-12	2.38E-11	1.72E-09	
7782-50-5	chlorine	2.12E-13	1.15E-09	3.89E-09	4.96E-11	5.09E-09	2.05E-08	
7647-01-0	hydrogen chloride	2.91E-11		5.82E-07	6.83E-09	5.89E-07	6.17E-08	
7487-94-7	mercuric chloride	2.69E-12	3.66E-11	5.95E-12		4.52E-11	2.14E-10	
7439-97-6	elemental mercury	3.63E-16		4.81E-14		4.85E-14	2.24E-10	
TOTAL		**N/A**	**N/A**	**N/A**	**N/A**	**N/A**	**N/A**	**N/A**

COPC INTAKE AND NONCANCER HAZARD ESTIMATES
TDC TECHNOLOGY
(Fisher)

CAS No.	COPC Name	HQ_soil	HQ_produce	HQ_dw	HQ_fish	HQ_oral	HQ_inhalation
123-91-1	1,4-dioxane	2.79E-14	1.35E-08	3.54E-09	1.04E-11	1.70E-08	2.40E-08
78-93-3	2-butanone	3.94E-15	3.04E-11	6.96E-10	9.46E-12	7.36E-10	2.78E-08
67-64-1	acetone	1.13E-14	1.43E-10	7.25E-09	1.37E-10	7.53E-09	6.32E-07
71-43-2	benzene	3.92E-16	6.35E-13	1.26E-09	2.49E-11	1.29E-09	1.97E-06
117-81-7	bis(2-ethylhexyl)-phthalate	3.35E-11	1.70E-08	2.98E-09	2.35E-09	2.23E-08	
74-87-3	chloromethane	2.28E-18	3.90E-14	3.16E-11	1.98E-13	3.18E-11	1.68E-07
75-71-8	dichlorodifluoromethane	1.15E-17	1.66E-14	1.18E-12	3.38E-14	1.23E-12	1.75E-07
84-74-2	di-n-butyl phthalate	1.34E-12	6.66E-11	2.75E-10	2.14E-09	2.49E-09	
117-84-0	di-n-octyl phthalate						
74-84-0	ethane						
505-60-2	H	1.74E-12	1.89E-09	6.48E-06	4.92E-07	6.98E-06	6.45E-04
74-82-8	methane						
91-20-3	naphthalene	2.34E-11	7.30E-09	2.38E-09	3.78E-10	1.01E-08	8.78E-06
108-88-3	toluene	2.84E-16	2.19E-13	3.13E-10	1.69E-11	3.30E-10	6.66E-08
75-69-4	trichlorofluoromethane	8.11E-20	7.98E-17	5.76E-13	2.87E-14	6.05E-13	1.12E-08
35822-46-9	1,2,3,4,6,7,8-HpCDD						
3268-87-9	1,2,3,4,6,7,8,9-OCDD						
67562-39-4	1,2,3,4,6,7,8-HpCDF						
39001-02-0	1,2,3,4,6,7,8,9-OCDF						
7664-41-7	ammonia						6.03E-08
7782-50-5	chlorine	2.03E-12	1.11E-08	3.73E-08	4.75E-10	4.88E-08	4.98E-04
7647-01-0	hydrogen chloride						1.08E-05
7487-94-7	mercuric chloride	8.60E-09	1.17E-07	1.90E-08		1.45E-07	2.51E-05
7439-97-6	elemental mercury						2.62E-06
TOTAL		**8.66E-09**	**1.68E-07**	**6.56E-06**	**4.97E-07**	**7.23E-06**	**1.19E-03**

COPC INTAKE AND NONCANCER HAZARD ESTIMATES
TDC TECHNOLOGY
(Fisher Child)

CAS No.	COPC Name	Isoil mg/kg/day	Iproduce mg/kg/day	Idw mg/kg/day	Ifish mg/kg/day	I_oral mg/kg/day	I_inh mg/kg/day	I_teq mg/kg/day
123-91-1	1,4-dioxane	2.72E-14	3.12E-09	8.25E-10	7.65E-13	3.95E-09	5.75E-08	
78-93-3	2-butanone	2.30E-14	4.20E-11	9.72E-10	4.17E-12	1.02E-09	1.10E-07	
67-64-1	acetone	9.87E-14	2.67E-10	1.52E-08	9.03E-11	1.56E-08	1.58E-06	
71-43-2	benzene	1.53E-17	6.37E-15	1.17E-11	7.33E-14	1.18E-11	4.70E-08	
117-81-7	bis(2-ethylhexyl)-phthalate	6.52E-12	8.53E-10	1.39E-10	3.45E-11	1.03E-09	2.10E-08	
74-87-3	chloromethane	5.76E-19	2.01E-15	1.91E-12	3.77E-15	1.92E-12	1.20E-08	
75-71-8	dichlorodifluoromethane	2.23E-17	8.39E-15	5.48E-13	4.96E-15	5.61E-13	1.39E-08	
84-74-2	di-n-butyl phthalate	1.31E-12	1.69E-11	6.40E-11	1.57E-10	2.40E-10	1.50E-09	
117-84-0	di-n-octyl phthalate	1.24E-12	1.43E-10	3.51E-13	4.53E-13	1.45E-10	2.11E-08	
74-84-0	ethane	7.94E-17	4.72E-14	7.34E-10	4.88E-12	7.39E-10	1.82E-05	
505-60-2	H	1.18E-16	3.36E-14	1.06E-10	2.53E-12	1.08E-10	1.08E-08	
74-82-8	methane	4.53E-18	7.94E-15	2.59E-10	5.66E-13	2.59E-10	7.69E-06	
91-20-3	naphthalene	4.55E-12	3.72E-10	1.11E-10	5.55E-12	4.92E-10	2.10E-08	
108-88-3	toluene	2.21E-16	4.32E-14	5.83E-11	9.90E-13	5.94E-11	2.64E-07	
75-69-4	trichlorofluoromethane	2.37E-19	5.93E-17	4.03E-13	6.32E-15	4.09E-13	6.24E-09	
35822-46-9	1,2,3,4,6,7,8-HpCDD	1.43E-17	3.13E-16	1.86E-19	1.59E-17	3.43E-16	7.04E-15	7.38E-17
3268-87-9	1,2,3,4,6,7,8,9-OCDD	8.72E-17	1.91E-15	7.18E-19	1.96E-18	2.00E-15	4.31E-14	1.35E-17
67562-39-4	1,2,3,4,6,7,8-HpCDF	8.30E-18	1.84E-16	4.28E-19	8.70E-18	2.01E-16	4.10E-15	4.30E-17
39001-02-0	1,2,3,4,6,7,8,9-OCDF	2.83E-17	6.22E-16	3.69E-19	6.30E-19	6.51E-16	1.40E-14	4.38E-18
7664-41-7	ammonia	1.25E-17	7.19E-14	5.03E-11	8.80E-13	5.12E-11	4.80E-09	
7782-50-5	chlorine	1.97E-12	2.82E-09	8.69E-09	3.49E-11	1.15E-08	5.73E-08	
7647-01-0	hydrogen chloride	2.72E-10		1.30E-06	4.81E-09	1.30E-06	1.72E-07	
7487-94-7	mercuric chloride	2.51E-11	8.17E-11	1.33E-11		1.20E-10	5.97E-10	
7439-97-6	elemental mercury	3.39E-15		1.08E-13		1.11E-13	6.24E-10	
TOTAL		**N/A**	**N/A**	**N/A**	**N/A**	**N/A**	**N/A**	**N/A**

COPC INTAKE AND NONCANCER HAZARD ESTIMATES
TDC TECHNOLOGY
(Fisher Child)

CAS No.	COPC Name	HQ_soil	HQ_produce	HQ_dw	HQ_fish	HQ_oral	HQ_inhalation
123-91-1	1,4-dioxane	2.61E-13	2.99E-08	7.91E-09	7.33E-12	3.79E-08	2.40E-08
78-93-3	2-butanone	3.68E-14	6.71E-11	1.55E-09	6.66E-12	1.63E-09	2.78E-08
67-64-1	acetone	1.05E-13	2.85E-10	1.62E-08	9.62E-11	1.66E-08	6.32E-07
71-43-2	benzene	3.66E-15	1.53E-12	2.82E-09	1.76E-11	2.83E-09	1.97E-06
117-81-7	bis(2-ethylhexyl)-phthalate	3.12E-10	4.09E-08	6.65E-09	1.65E-09	4.95E-08	
74-87-3	chloromethane	2.13E-17	7.39E-14	7.05E-11	1.39E-13	7.07E-11	1.68E-07
75-71-8	dichlorodifluoromethane	1.07E-16	4.02E-14	2.63E-12	2.38E-14	2.69E-12	1.75E-07
84-74-2	di-n-butyl phthalate	1.25E-11	1.62E-10	6.14E-10	1.51E-09	2.30E-09	
117-84-0	di-n-octyl phthalate						
74-84-0	ethane						
505-60-2	H	1.62E-11	4.61E-09	1.45E-05	3.46E-07	1.48E-05	6.45E-04
74-82-8	methane						
91-20-3	naphthalene	2.18E-10	1.78E-08	5.31E-09	2.66E-10	2.36E-08	8.78E-06
108-88-3	toluene	2.65E-15	5.18E-13	6.99E-10	1.19E-11	7.12E-10	6.66E-08
75-69-4	trichlorofluoromethane	7.57E-19	1.90E-16	1.29E-12	2.02E-14	1.31E-12	1.12E-08
35822-46-9	1,2,3,4,6,7,8-HpCDD						
3268-87-9	1,2,3,4,6,7,8,9-OCDD						
67562-39-4	1,2,3,4,6,7,8-HpCDF						
39001-02-0	1,2,3,4,6,7,8,9-OCDF						
7664-41-7	ammonia						6.03E-08
7782-50-5	chlorine	1.89E-11	2.70E-08	8.33E-08	3.35E-10	1.11E-07	4.98E-04
7647-01-0	hydrogen chloride						1.08E-05
7487-94-7	mercuric chloride	8.03E-08	2.61E-07	4.24E-08		3.84E-07	2.51E-05
7439-97-6	elemental mercury						2.62E-06
TOTAL		**8.08E-08**	**3.82E-07**	**1.46E-05**	**3.50E-07**	**1.55E-05**	**1.19E-03**

COPC INTAKE AND NONCANCER HAZARD ESTIMATES
TDC TECHNOLOGY
(Farmer)

CAS No.	COPC Name	Isoil mg/kg/day	Iproduce mg/kg/day	Idw mg/kg/day	Ibeef mg/kg/day	Imilk mg/kg/day	Ipork mg/kg/day	Iegg mg/kg/day	Ichicken mg/kg/day
123-91-1	1,4-dioxane	2.91E-15	1.97E-09	3.69E-10	1.13E-11	4.04E-11	2.69E-13	2.89E-17	4.46E-17
78-93-3	2-butanone	2.47E-15	2.30E-11	4.35E-10	2.22E-14	9.00E-14	4.80E-15	9.71E-17	1.50E-16
67-64-1	acetone	1.06E-14	1.63E-10	6.80E-09	2.61E-14	1.06E-13	5.62E-15	1.13E-16	1.75E-16
71-43-2	benzene	1.63E-18	3.58E-15	5.26E-12	3.80E-15	1.37E-14	1.69E-16	6.06E-19	9.33E-19
117-81-7	bis(2-ethylhexyl)-phthalate	6.98E-13	2.62E-09	6.21E-11	2.25E-07	8.04E-07	8.46E-09	1.89E-13	2.91E-13
74-87-3	chloromethane	6.17E-20	1.64E-15	8.56E-13	6.01E-18	2.25E-17	6.14E-19	9.45E-21	1.46E-20
75-71-8	dichlorodifluoromethane	2.39E-18	4.12E-15	2.45E-13	2.21E-16	8.80E-16	4.48E-17	9.00E-19	1.39E-18
84-74-2	di-n-butyl phthalate	1.40E-13	3.25E-11	2.86E-11	2.30E-09	8.22E-09	8.88E-11	4.15E-14	6.40E-14
117-84-0	di-n-octyl phthalate	1.33E-13	3.27E-08	1.57E-13	6.62E-07	2.37E-06	2.52E-08	5.06E-15	7.79E-15
74-84-0	ethane	8.50E-18	2.39E-14	3.28E-10	5.60E-15	2.03E-14	3.31E-16	2.89E-18	4.46E-18
505-60-2	H	1.27E-17	5.12E-14	4.73E-11	4.78E-13	1.71E-12	1.84E-14	4.96E-18	7.65E-18
74-82-8	methane	4.86E-19	4.11E-15	1.16E-10	2.63E-17			4.69E-21	8.25E-21
91-20-3	naphthalene	4.88E-13	1.82E-10	4.96E-11	3.96E-11	1.53E-10	8.91E-12	1.89E-13	2.90E-13
108-88-3	toluene	2.37E-17	3.05E-14	2.61E-11	1.76E-13	6.29E-13	7.05E-15	9.50E-18	1.46E-17
75-69-4	trichlorofluoromethane	2.54E-20	3.83E-17	1.80E-13	1.34E-16	4.82E-16	5.51E-18	1.00E-20	1.54E-20
35822-46-9	1,2,3,4,6,7,8-HpCDD	1.53E-18	1.91E-16	8.32E-20	4.65E-16	1.65E-15	1.32E-17	6.57E-20	1.01E-19
3268-87-9	1,2,3,4,6,7,8,9-OCDD	9.35E-18	1.17E-15	3.21E-19	2.23E-15	7.89E-15	6.30E-17	3.14E-19	4.83E-19
67562-39-4	1,2,3,4,6,7,8-HpCDF	8.89E-19	1.12E-16	1.92E-19	5.08E-16	1.80E-15	1.44E-17	7.24E-20	1.11E-19
39001-02-0	1,2,3,4,6,7,8,9-OCDF	3.03E-18	3.80E-16	1.65E-19	9.23E-16	3.27E-15	2.61E-17	1.30E-19	2.01E-19
7664-41-7	ammonia	1.34E-18	3.79E-14	2.25E-11	3.47E-17	1.49E-16	6.95E-18	1.62E-19	2.49E-19
7782-50-5	chlorine	2.12E-13	1.38E-09	3.89E-09	6.45E-12	2.62E-11	1.41E-12	2.86E-14	4.41E-14
7647-01-0	hydrogen chloride	2.91E-11		5.82E-07	6.50E-13	1.23E-12	2.63E-13	7.41E-15	1.14E-14
7487-94-7	mercuric chloride	2.69E-12	5.11E-10	5.95E-12	7.32E-11	5.19E-10	2.75E-14	8.06E-13	7.10E-13
7439-97-6	elemental mercury	3.63E-16		4.81E-14					
TOTAL		**N/A**	**N/A**	**N/A**	**N/A**	**N/A**	**N/A**	**N/A**	**N/A**

COPC INTAKE AND NONCANCER HAZARD ESTIMATES
TDC TECHNOLOGY
(Farmer)

CAS No.	COPC Name	I_oral mg/kg/day	I_inh mg/kg/day	I_teq mg/kg/day	HQ_soil	HQ_produce	HQ_dw	HQ_beef	HQ_milk
123-91-1	1,4-dioxane	2.39E-09	2.06E-08		2.79E-14	1.89E-08	3.54E-09	1.09E-10	3.87E-10
78-93-3	2-butanone	4.58E-10	3.95E-08		3.94E-15	3.67E-11	6.96E-10	3.55E-14	1.44E-13
67-64-1	acetone	6.97E-09	5.67E-07		1.13E-14	1.74E-10	7.25E-09	2.78E-14	1.12E-13
71-43-2	benzene	5.28E-12	1.68E-08		3.92E-16	8.59E-13	1.26E-09	9.11E-13	3.28E-12
117-81-7	bis(2-ethylhexyl)-phthalate	1.04E-06	7.53E-09		3.35E-11	1.26E-07	2.98E-09	1.08E-05	3.85E-05
74-87-3	chloromethane	8.58E-13	4.30E-09		2.28E-18	6.05E-14	3.16E-11	2.21E-16	8.30E-16
75-71-8	dichlorodifluoromethane	2.50E-13	4.98E-09		1.15E-17	1.98E-14	1.18E-12	1.06E-15	4.22E-15
84-74-2	di-n-butyl phthalate	1.07E-08	5.38E-10		1.34E-12	3.11E-10	2.75E-10	2.20E-08	7.88E-08
117-84-0	di-n-octyl phthalate	3.09E-06	7.56E-09						
74-84-0	ethane	3.29E-10	6.53E-06						
505-60-2	H	4.96E-11	3.85E-09		1.74E-12	7.02E-09	6.48E-06	6.55E-08	2.34E-07
74-82-8	methane	1.16E-10	2.75E-06						
91-20-3	naphthalene	4.34E-10	7.52E-09		2.34E-11	8.72E-09	2.38E-09	1.90E-09	7.36E-09
108-88-3	toluene	2.70E-11	9.47E-08		2.84E-16	3.66E-13	3.13E-10	2.10E-12	7.54E-12
75-69-4	trichlorofluoromethane	1.81E-13	2.23E-09		8.11E-20	1.23E-16	5.76E-13	4.29E-16	1.54E-15
35822-46-9	1,2,3,4,6,7,8-HpCDD	2.32E-15	2.52E-15	4.84E-17					
3268-87-9	1,2,3,4,6,7,8,9-OCDD	1.14E-14	1.54E-14	8.03E-18					
67562-39-4	1,2,3,4,6,7,8-HpCDF	2.43E-15	1.47E-15	3.90E-17					
39001-02-0	1,2,3,4,6,7,8,9-OCDF	4.60E-15	5.00E-15	2.88E-18					
7664-41-7	ammonia	2.25E-11	1.72E-09						
7782-50-5	chlorine	5.30E-09	2.05E-08		2.03E-12	1.32E-08	3.73E-08	6.19E-11	2.51E-10
7647-01-0	hydrogen chloride	5.82E-07	6.17E-08						
7487-94-7	mercuric chloride	1.11E-09	2.14E-10		8.60E-09	1.63E-06	1.90E-08	2.34E-07	1.66E-06
7439-97-6	elemental mercury	4.85E-14	2.24E-10						
TOTAL		**N/A**	**N/A**	**N/A**	**8.66E-09**	**1.81E-06**	**6.56E-06**	**1.11E-05**	**4.05E-05**

COPC INTAKE AND NONCANCER HAZARD ESTIMATES
TDC TECHNOLOGY
(Farmer)

CAS No.	COPC Name	HQ_pork	HQ_egg	HQ_chicken	HQ_oral	HQ_inhalation
123-91-1	1,4-dioxane	2.58E-12	2.77E-16	4.27E-16	2.30E-08	2.40E-08
78-93-3	2-butanone	7.68E-15	1.55E-16	2.39E-16	7.33E-10	2.78E-08
67-64-1	acetone	5.99E-15	1.21E-16	1.86E-16	7.42E-09	6.32E-07
71-43-2	benzene	4.05E-14	1.45E-16	2.24E-16	1.27E-09	1.97E-06
117-81-7	bis(2-ethylhexyl)-phthalate	4.06E-07	9.07E-12	1.40E-11	4.98E-05	
74-87-3	chloromethane	2.26E-17	3.49E-19	5.37E-19	3.16E-11	1.68E-07
75-71-8	dichlorodifluoromethane	2.15E-16	4.32E-18	6.65E-18	1.20E-12	1.75E-07
84-74-2	di-n-butyl phthalate	8.51E-10	3.98E-13	6.14E-13	1.02E-07	
117-84-0	di-n-octyl phthalate					
74-84-0	ethane					
505-60-2	H	2.52E-09	6.80E-13	1.05E-12	6.79E-06	6.45E-04
74-82-8	methane					
91-20-3	naphthalene	4.27E-10	9.04E-12	1.39E-11	2.08E-08	8.78E-06
108-88-3	toluene	8.45E-14	1.14E-16	1.75E-16	3.23E-10	6.66E-08
75-69-4	trichlorofluoromethane	1.76E-17	3.20E-20	4.93E-20	5.78E-13	1.12E-08
35822-46-9	1,2,3,4,6,7,8-HpCDD					
3268-87-9	1,2,3,4,6,7,8,9-OCDD					
67562-39-4	1,2,3,4,6,7,8-HpCDF					
39001-02-0	1,2,3,4,6,7,8,9-OCDF					
7664-41-7	ammonia					6.03E-08
7782-50-5	chlorine	1.35E-11	2.74E-13	4.23E-13	5.08E-08	4.98E-04
7647-01-0	hydrogen chloride					1.08E-05
7487-94-7	mercuric chloride	8.79E-11	2.58E-09	2.27E-09	3.56E-06	2.51E-05
7439-97-6	elemental mercury					2.62E-06
TOTAL		**4.10E-07**	**2.60E-09**	**2.30E-09**	**6.04E-05**	**1.19E-03**

COPC INTAKE AND NONCANCER HAZARD ESTIMATES
TDC TECHNOLOGY
(Farmer Child)

CAS No.	COPC Name	Isoil mg/kg/day	Iproduce mg/kg/day	Idw mg/kg/day	Ibeef mg/kg/day	Imilk mg/kg/day	Ipork mg/kg/day
123-91-1	1,4-dioxane	2.72E-14	4.43E-09	8.25E-10	6.97E-12	6.70E-11	2.05E-13
78-93-3	2-butanone	2.30E-14	5.05E-11	9.72E-10	1.37E-14	1.49E-13	3.67E-15
67-64-1	acetone	9.87E-14	3.23E-10	1.52E-08	1.60E-14	1.75E-13	4.29E-15
71-43-2	benzene	1.53E-17	8.58E-15	1.17E-11	2.34E-15	2.27E-14	1.29E-16
117-81-7	bis(2-ethylhexyl)-phthalate	6.52E-12	6.30E-09	1.39E-10	1.38E-07	1.33E-06	6.46E-09
74-87-3	chloromethane	5.76E-19	3.29E-15	1.91E-12	3.69E-18	3.74E-17	4.69E-19
75-71-8	dichlorodifluoromethane	2.23E-17	9.99E-15	5.48E-13	1.36E-16	1.46E-15	3.42E-17
84-74-2	di-n-butyl phthalate	1.31E-12	7.82E-11	6.40E-11	1.41E-09	1.36E-08	6.78E-11
117-84-0	di-n-octyl phthalate	1.24E-12	7.87E-08	3.51E-13	4.07E-07	3.93E-06	1.92E-08
74-84-0	ethane	7.94E-17	5.82E-14	7.34E-10	3.44E-15	3.37E-14	2.53E-16
505-60-2	H	1.18E-16	1.24E-13	1.06E-10	2.94E-13	2.84E-12	1.40E-14
74-82-8	methane	4.53E-18	9.47E-15	2.59E-10	1.62E-17		
91-20-3	naphthalene	4.55E-12	4.42E-10	1.11E-10	2.43E-11	2.55E-10	6.80E-12
108-88-3	toluene	2.21E-16	7.23E-14	5.83E-11	1.08E-13	1.04E-12	5.39E-15
75-69-4	trichlorofluoromethane	2.37E-19	9.11E-17	4.03E-13	8.25E-17	7.99E-16	4.21E-18
35822-46-9	1,2,3,4,6,7,8-HpCDD	1.43E-17	4.58E-16	1.86E-19	2.86E-16	2.74E-15	1.01E-17
3268-87-9	1,2,3,4,6,7,8,9-OCDD	8.72E-17	2.80E-15	7.18E-19	1.37E-15	1.31E-14	4.81E-17
67562-39-4	1,2,3,4,6,7,8-HpCDF	8.30E-18	2.69E-16	4.28E-19	3.12E-16	2.99E-15	1.10E-17
39001-02-0	1,2,3,4,6,7,8,9-OCDF	2.83E-17	9.10E-16	3.69E-19	5.67E-16	5.43E-15	2.00E-17
7664-41-7	ammonia	1.25E-17	8.58E-14	5.03E-11	2.13E-17	2.47E-16	5.31E-18
7782-50-5	chlorine	1.97E-12	3.35E-09	8.69E-09	3.97E-12	4.34E-11	1.08E-12
7647-01-0	hydrogen chloride	2.72E-10		1.30E-06	4.00E-13	2.04E-12	2.01E-13
7487-94-7	mercuric chloride	2.51E-11	1.22E-09	1.33E-11	4.50E-11	8.62E-10	2.10E-14
7439-97-6	elemental mercury	3.39E-15		1.08E-13			
TOTAL		**N/A**	**N/A**	**N/A**	**N/A**	**N/A**	**N/A**

COPC INTAKE AND NONCANCER HAZARD ESTIMATES
TDC TECHNOLOGY
(Farmer Child)

CAS No.	COPC Name	Iegg mg/kg/day	Ichicken mg/kg/day	I_oral mg/kg/day	I_inh mg/kg/day	I_teq mg/kg/day	HQ_soil
123-91-1	1,4-dioxane	2.08E-17	3.04E-17	5.33E-09	5.75E-08		2.61E-13
78-93-3	2-butanone	6.99E-17	1.02E-16	1.02E-09	1.10E-07		3.68E-14
67-64-1	acetone	8.17E-17	1.19E-16	1.55E-08	1.58E-06		1.05E-13
71-43-2	benzene	4.36E-19	6.36E-19	1.18E-11	4.70E-08		3.66E-15
117-81-7	bis(2-ethylhexyl)-phthalate	1.36E-13	1.99E-13	1.48E-06	2.10E-08		3.12E-10
74-87-3	chloromethane	6.80E-21	9.92E-21	1.92E-12	1.20E-08		2.13E-17
75-71-8	dichlorodifluoromethane	6.48E-19	9.45E-19	5.59E-13	1.39E-08		1.07E-16
84-74-2	di-n-butyl phthalate	2.99E-14	4.36E-14	1.53E-08	1.50E-09		1.25E-11
117-84-0	di-n-octyl phthalate	3.64E-15	5.31E-15	4.44E-06	2.11E-08		
74-84-0	ethane	2.08E-18	3.04E-18	7.34E-10	1.82E-05		
505-60-2	H	3.57E-18	5.22E-18	1.09E-10	1.08E-08		1.62E-11
74-82-8	methane	3.37E-21	5.62E-21	2.59E-10	7.69E-06		
91-20-3	naphthalene	1.36E-13	1.98E-13	8.43E-10	2.10E-08		2.18E-10
108-88-3	toluene	6.84E-18	9.98E-18	5.96E-11	2.64E-07		2.65E-15
75-69-4	trichlorofluoromethane	7.21E-21	1.05E-20	4.04E-13	6.24E-09		7.57E-19
35822-46-9	1,2,3,4,6,7,8-HpCDD	4.73E-20	6.89E-20	3.50E-15	7.04E-15	1.05E-16	
3268-87-9	1,2,3,4,6,7,8,9-OCDD	2.26E-19	3.29E-19	1.74E-14	4.31E-14	1.81E-17	
67562-39-4	1,2,3,4,6,7,8-HpCDF	5.21E-20	7.60E-20	3.59E-15	4.10E-15	7.68E-17	
39001-02-0	1,2,3,4,6,7,8,9-OCDF	9.38E-20	1.37E-19	6.95E-15	1.40E-14	6.28E-18	
7664-41-7	ammonia	1.16E-19	1.70E-19	5.04E-11	4.80E-09		
7782-50-5	chlorine	2.06E-14	3.00E-14	1.21E-08	5.73E-08		1.89E-11
7647-01-0	hydrogen chloride	5.33E-15	7.78E-15	1.30E-06	1.72E-07		
7487-94-7	mercuric chloride	5.81E-13	4.84E-13	2.17E-09	5.97E-10		8.03E-08
7439-97-6	elemental mercury			1.11E-13	6.24E-10		
TOTAL		**N/A**	**N/A**	**N/A**	**N/A**	**N/A**	**8.08E-08**

COPC INTAKE AND NONCANCER HAZARD ESTIMATES
TDC TECHNOLOGY
(Farmer Child)

CAS No.	COPC Name	HQ_produce	HQ_dw	HQ_beef	HQ_milk	HQ_pork
123-91-1	1,4-dioxane	4.25E-08	7.91E-09	6.68E-11	6.43E-10	1.97E-12
78-93-3	2-butanone	8.07E-11	1.55E-09	2.18E-14	2.39E-13	5.86E-15
67-64-1	acetone	3.44E-10	1.62E-08	1.71E-14	1.87E-13	4.57E-15
71-43-2	benzene	2.06E-12	2.82E-09	5.60E-13	5.43E-12	3.09E-14
117-81-7	bis(2-ethylhexyl)-phthalate	3.02E-07	6.65E-09	6.62E-06	6.39E-05	3.10E-07
74-87-3	chloromethane	1.21E-13	7.05E-11	1.36E-16	1.38E-15	1.73E-17
75-71-8	dichlorodifluoromethane	4.79E-14	2.63E-12	6.51E-16	7.00E-15	1.64E-16
84-74-2	di-n-butyl phthalate	7.50E-10	6.14E-10	1.35E-08	1.31E-07	6.50E-10
117-84-0	di-n-octyl phthalate					
74-84-0	ethane					
505-60-2	H	1.69E-08	1.45E-05	4.03E-08	3.89E-07	1.92E-09
74-82-8	methane					
91-20-3	naphthalene	2.12E-08	5.31E-09	1.17E-09	1.22E-08	3.26E-10
108-88-3	toluene	8.66E-13	6.99E-10	1.29E-12	1.25E-11	6.46E-14
75-69-4	trichlorofluoromethane	2.91E-16	1.29E-12	2.64E-16	2.55E-15	1.34E-17
35822-46-9	1,2,3,4,6,7,8-HpCDD					
3268-87-9	1,2,3,4,6,7,8,9-OCDD					
67562-39-4	1,2,3,4,6,7,8-HpCDF					
39001-02-0	1,2,3,4,6,7,8,9-OCDF					
7664-41-7	ammonia					
7782-50-5	chlorine	3.21E-08	8.33E-08	3.80E-11	4.17E-10	1.03E-11
7647-01-0	hydrogen chloride					
7487-94-7	mercuric chloride	3.90E-06	4.24E-08	1.44E-07	2.75E-06	6.71E-11
7439-97-6	elemental mercury					
TOTAL		**4.32E-06**	**1.46E-05**	**6.82E-06**	**6.72E-05**	**3.13E-07**

COPC INTAKE AND NONCANCER HAZARD ESTIMATES
TDC TECHNOLOGY
(Farmer Child)

CAS No.	COPC Name	HQ_egg	HQ_chicken	HQ_oral	HQ_inhalation
123-91-1	1,4-dioxane	2.00E-16	2.91E-16	5.11E-08	2.40E-08
78-93-3	2-butanone	1.12E-16	1.63E-16	1.63E-09	2.78E-08
67-64-1	acetone	8.70E-17	1.27E-16	1.65E-08	6.32E-07
71-43-2	benzene	1.05E-16	1.53E-16	2.82E-09	1.97E-06
117-81-7	bis(2-ethylhexyl)-phthalate	6.53E-12	9.52E-12	7.12E-05	
74-87-3	chloromethane	2.51E-19	3.66E-19	7.07E-11	1.68E-07
75-71-8	dichlorodifluoromethane	3.11E-18	4.53E-18	2.68E-12	1.75E-07
84-74-2	di-n-butyl phthalate	2.87E-13	4.18E-13	1.46E-07	
117-84-0	di-n-octyl phthalate				
74-84-0	ethane				
505-60-2	H	4.89E-13	7.15E-13	1.49E-05	6.45E-04
74-82-8	methane				
91-20-3	naphthalene	6.51E-12	9.50E-12	4.04E-08	8.78E-06
108-88-3	toluene	8.20E-17	1.20E-16	7.14E-10	6.66E-08
75-69-4	trichlorofluoromethane	2.31E-20	3.36E-20	1.29E-12	1.12E-08
35822-46-9	1,2,3,4,6,7,8-HpCDD				
3268-87-9	1,2,3,4,6,7,8,9-OCDD				
67562-39-4	1,2,3,4,6,7,8-HpCDF				
39001-02-0	1,2,3,4,6,7,8,9-OCDF				
7664-41-7	ammonia				6.03E-08
7782-50-5	chlorine	1.98E-13	2.88E-13	1.16E-07	4.98E-04
7647-01-0	hydrogen chloride				1.08E-05
7487-94-7	mercuric chloride	1.86E-09	1.55E-09	6.92E-06	2.51E-05
7439-97-6	elemental mercury				2.62E-06
TOTAL		**1.87E-09**	**1.57E-09**	**9.34E-05**	**1.19E-03**

NONCANCER HAZARD ESTIMATES
FOR ACUTE INHALATION EXPOSURE
TDC TECHNOLOGY

CAS No.	COPC Name	Cacute µg/m^3	AHQ_inh
123-91-1	1,4-dioxane	2.89E-02	9.64E-06
78-93-3	2-butanone	5.54E-02	4.26E-06
67-64-1	acetone	7.94E-01	1.67E-06
71-43-2	benzene	2.36E-02	1.81E-05
117-81-7	bis(2-ethylhexyl)-phthalate	1.06E-02	1.06E-06
74-87-3	chloromethane	6.03E-03	3.01E-08
75-71-8	dichlorodifluoromethane	6.98E-03	4.65E-10
84-74-2	di-n-butyl phthalate	7.69E-04	7.69E-08
117-84-0	di-n-octyl phthalate	1.06E-02	
74-84-0	ethane	9.15E+00	2.61E-06
505-60-2	H	5.40E-03	8.31E-05
74-82-8	methane	3.86E+00	
91-20-3	naphthalene	1.06E-02	
108-88-3	toluene	1.33E-01	3.59E-06
75-69-4	trichlorofluoromethane	3.13E-03	6.26E-10
35822-46-9	1,2,3,4,6,7,8-HpCDD	3.54E-09	7.08E-12
3268-87-9	1,2,3,4,6,7,8,9-OCDD	2.17E-08	2.17E-09
67562-39-4	1,2,3,4,6,7,8-HpCDF	2.06E-09	1.37E-11
39001-02-0	1,2,3,4,6,7,8,9-OCDF	7.02E-09	9.36E-10
7664-41-7	ammonia	2.41E-03	7.52E-07
7782-50-5	chlorine	2.89E-02	1.38E-04
7647-01-0	hydrogen chloride	9.61E-02	4.58E-05
7487-94-7	mercuric chloride	3.12E-04	7.81E-08
7439-97-6	elemental mercury	3.13E-04	5.22E-04
TOTAL		**N/A**	**8.31E-04**

PCBs, PCDDs, and PCDFs EXPOSURE ESTIMATES AS 2,3,7,8 TCDD TEQ
TDC TECHNOLOGY

Exposure Scenario	**Location**	**I_teq** mg TEQ/kg/day	**I_teq** pg TEQ/kg/day	**Cbmilk** pg TEQ/kg	**I_bmilk** pg TEQ/kg/day
Adult Resident	Rmax	4.84E-17	4.84E-08	5.36E-04	1.4114E-06
Child Resident	Rmax	1.34E-16	1.34E-07		
Fisher	Rmax	4.88E-17	4.88E-08	5.40E-04	1.4216E-06
Fisher Child	Rmax	1.35E-16	1.35E-07		
Farmer	Fmax	9.83E-17	9.83E-08	1.09E-03	2.8662E-06
Farmer Child	Fmax	2.07E-16	2.07E-07		

SUMMARY OF ESTIMATED
CANCER RISKS AND NONCANCER HAZARDS
TDC TECHNOLOGY

Exposure Scenario	Scenario Location	Cancer Risk (Benchmark = 1E-05)			Total Hazard Index (Benchmark = 0.25)		
		Oral	Inhalation	Total	Oral	Inhalation	Total
Adult Resident	Rmax	1.60E-10	2.41E-08	2.42E-08	0.000007	0.001194	0.001201
Child Resident	Rmax	7.17E-11	4.81E-09	4.89E-09	0.000015	0.001194	0.001209
Fisher	Rmax	1.72E-10	2.41E-08	2.42E-08	0.000007	0.001194	0.001201
Fisher Child	Rmax	7.33E-11	4.81E-09	4.89E-09	0.000015	0.001194	0.001209
Farmer	Fmax	8.19E-09	3.21E-08	4.03E-08	0.000060	0.001194	0.001254
Farmer Child	Fmax	1.78E-09	4.81E-09	6.60E-09	0.000093	0.001194	0.001287
Acute Exposure	Amax	--	--	--	--	0.000831	--

SUMMARY OF ESTIMATED MAXIMUM
CANCER RISKS AND NONCANCER HAZARDS FOR INDIVIDUAL COPCS AND EXPOSURE PATHWAYS
TDC TECHNOLOGY

Exposure Scenario	Exposure Pathway	Carcinogenic Risk		Non Carcinogenic Hazard	
		Max Cancer Risk	From COPC	Max HQ	From COPC
Adult Resident	inhalation	2.32E-08	H	6.45E-04	H
	oral	1.50E-10	H	6.48E-06	H
	soil	3.52E-15	bis(2-ethylhexyl)-phthalate	8.60E-09	mercuric chloride
	produce	6.35E-12	1,4-dioxane	1.17E-07	mercuric chloride
Child Resident	inhalation	4.64E-09	H	6.45E-04	H
	oral	6.69E-11	H	1.45E-05	H
	soil	6.58E-15	bis(2-ethylhexyl)-phthalate	8.03E-08	mercuric chloride
	produce	2.82E-12	1,4-dioxane	2.61E-07	mercuric chloride
Fisher	inhalation	2.32E-08	H	6.45E-04	H
	oral	1.61E-10	H	6.98E-06	H
	soil	3.52E-15	bis(2-ethylhexyl)-phthalate	8.60E-09	mercuric chloride
	produce	6.35E-12	1,4-dioxane	1.17E-07	mercuric chloride
	fish	1.14E-11	H	4.92E-07	H
Fisher Child	inhalation	4.64E-09	H	6.45E-04	H
	oral	6.85E-11	H	1.48E-05	H
	soil	6.58E-15	bis(2-ethylhexyl)-phthalate	8.03E-08	mercuric chloride
	produce	2.82E-12	1,4-dioxane	2.61E-07	mercuric chloride
	fish	1.60E-12	H	3.46E-07	H

SUMMARY OF ESTIMATED MAXIMUM
CANCER RISKS AND NONCANCER HAZARDS FOR INDIVIDUAL COPCS AND EXPOSURE PATHWAYS
TDC TECHNOLOGY

Exposure Scenario	Exposure Pathway	Carcinogenic Risk		Non Carcinogenic Hazard	
		Max Cancer Risk	From COPC	Max HQ	From COPC
Farmer	inhalation	3.10E-08	H	6.45E-04	H
	oral	7.97E-09	bis(2-ethylhexyl)-phthalate	4.98E-05	bis(2-ethylhexyl)-phthalate
	soil	9.84E-17	bis(2-ethylhexyl)-phthalate	8.60E-09	mercuric chloride
	produce	1.99E-11	bis(2-ethylhexyl)-phthalate	1.63E-06	mercuric chloride
	beef	1.72E-09	bis(2-ethylhexyl)-phthalate	1.08E-05	bis(2-ethylhexyl)-phthalate
	milk	6.16E-09	bis(2-ethylhexyl)-phthalate	3.85E-05	bis(2-ethylhexyl)-phthalate
	pork	6.49E-11	bis(2-ethylhexyl)-phthalate	4.06E-07	bis(2-ethylhexyl)-phthalate
	egg	2.67E-17	bis(2-ethylhexyl)-phthalate	2.58E-09	mercuric chloride
	chicken	4.11E-17	bis(2-ethylhexyl)-phthalate	2.27E-09	mercuric chloride
Farmer Child	inhalation	4.64E-09	H	6.45E-04	H
	oral	1.71E-09	bis(2-ethylhexyl)-phthalate	7.12E-05	bis(2-ethylhexyl)-phthalate
	soil	6.58E-15	bis(2-ethylhexyl)-phthalate	8.03E-08	mercuric chloride
	produce	7.24E-12	bis(2-ethylhexyl)-phthalate	3.90E-06	mercuric chloride
	beef	1.59E-10	bis(2-ethylhexyl)-phthalate	6.62E-06	bis(2-ethylhexyl)-phthalate
	milk	1.53E-09	bis(2-ethylhexyl)-phthalate	6.39E-05	bis(2-ethylhexyl)-phthalate
	pork	7.44E-12	bis(2-ethylhexyl)-phthalate	3.10E-07	bis(2-ethylhexyl)-phthalate
	egg	1.37E-16	bis(2-ethylhexyl)-phthalate	1.86E-09	mercuric chloride
	chicken	2.00E-16	bis(2-ethylhexyl)-phthalate	1.55E-09	mercuric chloride
Acute Exposure	inh	NA	NA	5.22E-04	elemental mercury

"This document has been reviewed by RWR and no OPSEC-sensitive information was found.

APPENDIX 3

DAVINCH TECHNOLOGY

RISK ASSESSMENT CALCULATIONS

This document has been reviewed for ITAR/EAR and no ITAR/EAR sensitive information was found.

TABLE OF CONTENTS

Risk Model Parameters ……..……1
Site-Specific and Default Constants ……...……6
Exposures Scenario Specific Data ……..7
Animal Exposure Data ……8
Waterbody and Watershed Specific Data ……...…9
Air Modeling Results ……....10
Emission Rates and Inputs from Vapor Air Modeling ……11
COPC Toxicity Data ……12
Calculations for Estimating Fish and Sediment Concentrations – Lake Vega ……16
Calculations for Estimating Fish and Sediment Concentrations – Lake Vega (For Non cancer Hazards) ……18
Calculations for Estimating Fish and Sediment Concentrations – Lake Vega (For Cancer Risks) ……19
Calculations for Estimating Drinking Water and Sediment Concentrations – Kentucky River ...20
Calculations for Estimating Drinking Water and Sediment Concentrations – Kentucky River (For Non Cancer Hazards) …….....21
Calculations for Estimating Drinking Water and Sediment Concentrations – Kentucky River (For Cancer Risks) ……...22
Calculations for Estimating Drinking Water and Sediment Concentrations – Kentucky River (For Cancer Risks – Exposure Duration > 30 Years) ……...23
Calculations for Land Based Media Concentrations "RMAX" ……...…24
Calculations for Land Based Media Concentrations "RMAX" ("RMAX" for Non Cancer Hazards) ……....25
Calculations for Land Based Media Concentrations "RMAX" ("RMAX" for Cancer Risks) ….26
Calculations for Land Based Media Concentrations ("FMAX") ……27
Calculations for Land Based Media Concentrations ("FMAX" for Non Cancer Hazards) …….28
Calculations for Land Based Media Concentrations ("FMAX" for Child Cancer Risks) ……...30
Calculations for Land Based Media Concentrations ("FMAX" for Adult Cancer Risks) ……...32
COPC Intake and Cancer Risk Estimates (Adult Resident) ……..…34
COPC Intake and Cancer Risk Estimates (Child Resident) ……....35
COPC Intake and Cancer Risk Estimates (Fisher) ……...…36
COPC Intake and Cancer Risk Estimates (Child Fisher) ……..……38
COPC Intake and Cancer Risk Estimates (Farmer) ……..……40
COPC Intake and Cancer Risk Estimates (Farmer Child) ……..……...43

TABLE OF CONTENTS (continued)

PCBs, PCDDs, AND PCDFs Intake and cancer Risk Estimates As 2, 3, 7, 8 TCDD TEQ ...……46
COPC Intake and Non Cancer Hazards Estimates (Adult Resident) ……....48
COPC Intake and Non Cancer Hazards Estimates (Child Resident) ……50
COPC Intake and Non Cancer Hazards Estimates (Fisher) ……..52
COPC Intake and Non Cancer Hazards Estimates (Fisher Child) ……....54
COPC Intake and Non Cancer Hazards Estimates (Farmer) ……....56
COPC Intake and Non Cancer Hazards Estimates (Farmer Child) ……..…59
Non Cancer Hazard Estimates for Acute Inhalation Exposure …….62
PCBs, PCDDs, AND PCDFs EXPOSURE ESTIMATES As 2, 3, 7, 8 TCDD TEQ ……63
Summary of Estimated Cancer Risks and Non Cancer Hazards ……..…64
Summary of Estimated Maximum Cancer Risks and Non Cancer Hazards for Individuals COPCs and Exposure Pathways ……...65

RISK MODEL PARAMETERS
DAVINCH TECHNOLOGY

Parameter	Units	Description	Category
BD	g soil/cm^3 soil	Soil bulk density	Constants
Bs	--	Soil bioavailability factor	Constants
Cd	--	Drag coefficient	Constants
Ev	cm/yr	Average annual evapotranspiration	Constants
I	cm/yr	Average annual irrigation	Constants
k	--	von Karman's constant	Constants
kp	1/yr	Plant surface loss coefficient	Constants
mu_a	g/cm/s	Viscosity of air	Constants
P	cm/yr	Average annual precipitation	Constants
R	atm-m^3/mol-K	Universal gas constant	Constants
rho_a	g/cm^3	Density of air	Constants
rho_soil	g/cm^3	Density of soil	Constants
rho_w	g/cm^3	Density of water	Constants
RO	cm/yr	Average annual surface runoff from pervious areas	Constants
T1	year	Time period at the beginning of combustion	Constants
Ta	K	Ambient air temperature	Constants
tD	year	Time period over which deposition occurs	Constants
theta_sw	mL/cm^3	Soil volumetric water content	Constants
Zs	cm	Soil mixing zone depth	Constants
Rp_ag	--	Interception fraction of the edible portion of above ground produce	Constants
Tp_ag	yr	Length of plant exposure to deposition per harvest of the edible portion of the ith plant group	Constants
Yp_ag	kg DW/m^2	Yield or standing crop biomass of the edible portion of the plant (productivity)	Constants
h_teq	days	Half-life of dioxin TEQ in adults	Constants
f1	--	Fraction of ingested dioxin that is stored in fat	Constants
f2	--	Fraction of mother's weight that is fat	Constants
f3	--	Fraction of mother's breast milk that is fat	Constants
f4	--	Fraction of ingested COPC that is absorbed	Constants
BW	kg	Body weight	Exposure Basis
BW_infant	kg	Body weight for infant	Exposure Basis
IR	m^3/hr	Inhalation rate	Exposure Basis
Crsoil	kg soil/day	Consumption rate of soil	Exposure Basis
Crag	kg DW plant/kg BW-day	Consumption rate of exposed aboveground produce	Exposure Basis
CRpp	kg DW plant/kg BW-day	Consumption rate of protected aboveground produce	Exposure Basis
CRbg	kg DW plant/kg BW-day	Consumption rate of belowground produce	Exposure Basis
CRdw	L water/day	Consumption rate of drinking water	Exposure Basis
Crfish	kg/kg-day	Consumption rate of fish	Exposure Basis
CRbmilk	kg/day	Ingestion rate of breast milk by the infant	Exposure Basis

RISK MODEL PARAMETERS
DAVINCH TECHNOLOGY

Parameter	Units	Description	Category
Fsoil	--	Fraction of soil that is contaminated	Exposure Basis
Fproduce	--	Fraction of ingested produce that is contaminated (aka Fag)	Exposure Basis
Fdw	--	Fraction of drinking water that is contaminated	Exposure Basis
Ffish	--	Fraction of fish that is contaminated	Exposure Basis
ET	hours/day	Exposure time	Exposure Basis
EF	days/yr	Exposure frequency	Exposure Basis
ED	year	Exposure duration	Exposure Basis
AT_noncancer	year	Averaging time for estimating noncancer hazard	Exposure Basis
AT_cancer	year	Averaging time for estimating cancer risk	Exposure Basis
AT_nursing	year	Averaging time for estimating average daily dose for a nursing infant	Exposure Basis
eff		Exposure frequency factor (EF divided by 365 days/yr)	Exposure Basis
edf_nc	--	Exposure duration factor for noncancer hazard (ED/AT_noncancer)	Exposure Basis
edf_c	--	Exposure duration factor for cancer risk (ED/AT_cancer)	Exposure Basis
edf_nursing	--	Exposure duration factor for nursing infants	Exposure Basis
b	--	Empirical slope coefficient	Waterbody Input
AI	m^2	Impervious watershed area receiving COPC deposition	Waterbody Input
AL	m^2	Total watershed area receiving deposition	Waterbody Input
Aw	m^2	Waterbody Surface Area	Waterbody Input
C_usle	--	USLE cover management factor	Waterbody Input
CBS	g/cm^3	Bed sediment concentration	Waterbody Input
dbs	m	Depth of upper benthic sediment layer	Waterbody Input
dwc	m	Depth of water column	Waterbody Input
dz	m	Total water body depth	Waterbody Input
flipid	--	Fish lipid content	Waterbody Input
kb	1/yr	Benthic burial rate constant	Waterbody Input
K_usle	ton/acre	USLE erodibility factor	Waterbody Input
lambda_z	--	Dimensionless viscous sublayer thickness	Waterbody Input
LS_usle	--	USLE length-slope factor	Waterbody Input
mu_w	g/cm-s	Viscosity of water corresponding to water temperature	Waterbody Input
OCsed	--	Fraction of organic carbon in bottom sediment	Waterbody Input
PF_usle	--	USLE supporting practice factor	Waterbody Input
RF_usle	1/yr	USLE rainfall (or erosivity factor)	Waterbody Input
SD	--	Sediment delivery ratio (watershed)	Waterbody Input
theta	--	Temperature correction factor	Waterbody Input
theta_bs	--	Bed sediment concentration	Waterbody Input
TSS	mg/L	Total suspended solids concentration	Waterbody Input
Twk	K	Water body temperature	Waterbody Input
u	m/s	Current velocity	Waterbody Input
Vfx	m^3/yr	Average volumetric flow rate through water body	Waterbody Input

RISK MODEL PARAMETERS
DAVINCH TECHNOLOGY

Parameter	Units	Description	Category
W	m/s	Average annual wind speed	Waterbody Input
Xe	kg/m^2-yr	Unit Soil loss	Waterbody Input
Cyv	µg-s/g-m^3	Unitized vapor phase air concentration (yearly average)	Air Model
Cyp	µg-s/g-m^3	Unitized particle phase air concentration (yearly average)	Air Model
Cypb	µg-s/g-m^3	Unitized particle-bound phase air concentration (yearly average)	Air Model
Dytv(Vdv)	s/m^2-yr	Unitized vapor phase total deposition (yearly average) as a function of the dry vapor deposition velocity	Air Model
Dytp	s/m^2-yr	Unitized particle phase total deposition (yearly average)	Air Model
Dytpb	s/m^2-yr	Unitized particle-bound phase total deposition (yearly average)	Air Model
Dydp	s/m^2-yr	Unitized particle phase dry deposition (yearly average)	Air Model
Dydpb	s/m^2-yr	Unitized particle-bound phase dry deposition (yearly average)	Air Model
Dywp	s/m^2-yr	Unitized particle phase wet deposition (yearly average)	Air Model
Dywpb	s/m^2-yr	Unitized particle-bound phase wet deposition (yearly average)	Air Model
Chv	µg-s/g-m^3	Unitized vapor phase air concentration (hourly maximum)	Air Model
Chp	µg-s/g-m^3	Unitized particle phase air concentration (hourly maximum)	Air Model
Chpb	µg-s/g-m^3	Unitized particle-bound phase air concentration (hourly maximum)	Air Model
Q	g/s	COPC emission rate impacting risk assessment area (chronic)	COPC Data
Qa	g/s	COPC emission rate impacting risk assessment area (acute)	COPC Data
kse	1/yr	COPC loss constant due to soil erosion	COPC Data
ksr	1/yr	COPC loss constant due to runoff	COPC Data
ksl	1/yr	COPC loss constant due to leaching	COPC Data
ksv	1/yr	COPC loss constant due to volatilization	COPC Data
ks	1/yr	COPC soil loss constant due to all processes	COPC Data
RfDo	mg/kg/day	Oral reference dose	COPC Data
RfC	mg/m^3	Reference concentration	COPC Data
CSFo	1/(mg/kg/day)	Oral cancer slope factor	COPC Data
URFi	1/(µg/m^3)	Inhalation unit risk factor	COPC Data
AIEC	mg/m^3	Acute inhalation exposure criterion	COPC Data
BAF	L/kg FW	Bioaccumulation factor for COPC in fish	COPC Data
BCFfish	L/kg FW	Bioconcentration factor for COPC in fish	COPC Data
BSAFfish	(mg/kg)/(mg/kg)	Biota-sediment accumulation factor	COPC Data
Brag	--	Plant-soil bioconcentration factor for given plant-type	COPC Data
Brroot	--	Plant-soil bioconcentration factor for given plant-type	COPC Data
Bvag	(mg/kg)/(mg/kg)	COPC air-to-plant biotransfer factor for given plant-type	COPC Data
Babeef	day/kg	Biotransfer factor-beef	COPC Data
Baeggs	day/kg	Biotransfer factor-eggs	COPC Data
Bamilk	day/kg	Biotransfer factor-milk	COPC Data
Bapork	day/kg	Biotransfer factor-pork	COPC Data
Bapoult	day/kg	Biotransfer factor-poultry	COPC Data

RISK MODEL PARAMETERS
DAVINCH TECHNOLOGY

Parameter	Units	Description	Category
BCFegg	(mg/kg)/(mg/kg)	Biococentration factor-eggs	COPC Data
BCFpoult	(mg/kg)/(mg/kg)	Biococentration factor-poultry	COPC Data
Brf/s	unitless	Plant-soil bioconcentration factor for forage/silage	COPC Data
Bvforage	(mg/kg)/mg/kg)	COPC air-to-plant biotransfer factor-forage	COPC Data
Brgrain	unitless	Plant-soil biocontration factor for grain	COPC Data
Da	cm^2/s	Diffusivity of COPC in air	COPC Data
Dw	cm^2/s	Diffusivity of COPC in water	COPC Data
Fv	--	Fraction of COPC in vapor phase	COPC Data
H	atm·m^3/mol	Henry's Law constant	COPC Data
Kdbs	cm^3 water/g bed sediment	Bed sediment/sediment pore-water partition coefficient	COPC Data
Kds	cm^3 water/g soil	Soil-water partition coefficient	COPC Data
Kdsw	L water/kg suspended sediment	Suspended sediments/ surface water partition coefficient	COPC Data
Kow	--	Octanol-water partition coefficient	COPC Data
ksg	1/yr	COPC soil loss constant due to biotic and abiotic degradation	COPC Data
TEF	--	Toxicity equivalency factor	COPC Data
Fw	--	Fraction of COPC wet deposition that adheres to plant surfaces	COPC Data
ER	--	Soil enrichment ratio	COPC Data
Vdv	cm/s	Dry deposition velocity	COPC Data
Ds	mg COPC/kg soil/yr	Deposition term	Water Fate & Transport
Cstd	mg COPC/kg soil	Soil concentration at time tD	Water Fate & Transport
LDEP	g/yr	Total (wet and dry) particle phase and wet vapor phase COPC direct deposition load to water body	Water Fate & Transport
KG	m/yr	Gas phase transfer coefficient	Water Fate & Transport
KL	m/yr	Liquid phase transfer coefficient	Water Fate & Transport
Kv_overall	m/yr	Overall COPC transfer rate coefficient	Water Fate & Transport
Ldif	g/yr	Vapor phase COPC diffusion (dry deposition) load to water body	Water Fate & Transport
LRI	g/yr	Runoff load from impervious surfaces	Water Fate & Transport
fwc	--	Fraction of total water body COPC concentration in the water column	Water Fate & Transport
fbs	--	Fraction of total water body COPC concentration in benthic sediment	Water Fate & Transport
kv	1/yr	Water column volatilization rate constant	Water Fate & Transport
kwt	1/yr	Overall total water body COPC dissipation rate constant	Water Fate & Transport
Cs	mg COPC/kg DW soil	For cancer risk Cs is the average soil concentration over the exposure period. For noncancer health hazards Cs is equivalent to CstD.	Water Fate & Transport
LR	g/yr	Runoff load from pervious surfaces	Water Fate & Transport
LE	g/yr	Soil erosion load	Water Fate & Transport
LT	g/yr	Total COPC load to the water body (including deposition, runoff, and erosion)	Water Fate & Transport
Cwtot	g COPC/m^3 water body	Total water body COPC concentration (including water column and bed sediment)	Water Fate & Transport

RISK MODEL PARAMETERS
DAVINCH TECHNOLOGY

Parameter	Units	Description	Category
Cwctot	mg COPC/L water column	Total COPC concentration in water column	Water Fate & Transport
Cdw	mg COPC/L water	Dissolved phase water concentration	Water Fate & Transport
Csb	mg COPC/kg sediment	COPC concentration sorbed to bed sediment	Water Fate & Transport
Cfish	mg COPC/kg FW tissue	Concentration of COPC in fish	Water Fate & Transport
Ca	µg/m^3	Air concentration	Land Fate & Transport
VGag	--	Empirical correction factor for reducing edible plant mater concentration. VG_ag and VG_bg are COPC-specific	Land Fate & Transport
Pd_ag	mg COPC/kg DW	Concentration of COPC in aboveground unprotected plants due to direct deposition	Land Fate & Transport
Pv_ag	mg COPC/kg WW	Concentration of COPC in aboveground produce due to air-to-plant transfer	Land Fate & Transport
Pr_ag	mg COPC/kg DW	Concentration of COPC in aboveground produce due to root uptake	Land Fate & Transport
Pr_bg	mg COPC/kg DW	Concentration of COPC in belowground produce due to root uptake	Land Fate & Transport
Pag	mg COPC/kg DW	Concentration of COPC in consumed potion of aboveground produce	Land Fate & Transport
Isoil	mg COPC/kg Bw-day	Daily intake of COPC from soil	Intake, Risk & Hazard
Iproduce	mg COPC/kg Bw-day	Daily intake of COPC from produce	Intake, Risk & Hazard
Ifish	mg COPC/kg Bw-day	Daily intake of COPC from fish	Intake, Risk & Hazard
Idw	mg COPC/kg Bw-day	Daily intake of COPC from drinking water	Intake, Risk & Hazard
I_oral	mg COPC/kg BW-day	Total intake via oral ingestion of contaminated media	Intake, Risk & Hazard
I_inh	mg COPC/kg BW-day	Intake of COPC intake via inhalation	Intake, Risk & Hazard
I_teq	mg COPC/kg BW-day	Daily intake of PCDDs, PCDFs, and PCBs as 2,3,7,8 TCDD TEQ	Intake, Risk & Hazard
Cbmilk	pg COPC/kg milk fat	COPC Concentration in milk fat of breast milk	Intake, Risk & Hazard
I_bmilk	pg COPC/kg BW infant/day	Intake of 2,3,7,8 TCDD TEQ for nursing infant (based on exposure scenario for the infant's mother)	Intake, Risk & Hazard
HQsoil	--	Hazard quotient	Intake, Risk & Hazard
HQproduce	--	Hazard quotient	Intake, Risk & Hazard
HQdw	--	Hazard quotient	Intake, Risk & Hazard
HQfish	--	Hazard quotient	Intake, Risk & Hazard
HQinh	--	Hazard quotient	Intake, Risk & Hazard
Cancer_oral	--	Individual lifetime cancer risk through oral exposure to COPC	Intake, Risk & Hazard
Cancer_inh	--	Individual lifetime cancer risk through inhalation exposure to COPC	Intake, Risk & Hazard
Cacute	µg/m^3	Acute air concentration	Intake, Risk & Hazard
AHQ_inh	--	Acute hazard quotient for inhalation of COPCs	Intake, Risk & Hazard

SITE-SPECIFIC AND DEFAULT CONSTANTS
DAVINCH TECHNOLOGY

Parameter	Units	Value
BD	g/cm^3	1.5
Cd	--	0.0011
Ev	cm/yr	76.2
I	cm/yr	13.9
k	--	0.4
kp	1/yr	18
mu_a	g/cm/s	1.81E-04
P	cm/yr	113
R	atm-m^3/mol-K	8.205E-05
rho_a	g/cm^3	0.00120
rho_soil	g/cm^3	2.7
rho_w	g/cm^3	1.00
RO	cm/yr	45.72
T1	year	0
Ta	K	298
tD	yr	0.6231
theta_sw	mL/cm^3	0.2
Zs	cm	2
Rp_ag	--	0.39
Tp_ag	yr	0.16
Yp_ag	kg/m^2	2.24
Rp_f	--	0.5
Tp_f	yr	0.12
Yp_f	kg/m^2	0.24
Rp_s	--	0.46
Tp_s	yr	0.16
Yp_s	kg/m^2	0.8
VGf	--	1.0
VGs	--	0.5
MF_behp	--	0.01
h_teq	days	2,555
f1	--	0.90
f2	--	0.30
f3	--	0.04
f4	--	0.90

EXPOSURE SCENARIO SPECIFIC DATA
DAVINCH TECHNOLOGY

Parameter	Units	Adult Resident	Child Resident	Subsistence Fisher	Subsistence Fisher Child	Farmer	Farmer Child
Scenario ID	--	**AR**	**CR**	**SF**	**SFC**	**F**	**FC**
BW	kg	70	15	70	15	70	15
IR	m^3/hr	0.83	0.497	0.83	0.497	0.83	0.497
CRsoil	kg/day	0.0001	0.0002	0.0001	0.0002	0.0001	0.0002
CRag	kg /kg/day	0.00032	0.00077	0.00032	0.00077	0.00047	0.00113
CRpp	kg /kg/day	0.00061	0.00150	0.00061	0.00150	0.00064	0.00157
CRbg	kg /kg/day	0.00014	0.00023	0.00014	0.00023	0.00017	0.00028
CRdw	L/day	1.4	0.67	1.4	0.67	1.4	0.67
CRfish	kg/kg/day			1.25E-03	8.80E-04		
CRbeef						0.00122	0.00075
CRmilk						0.01367	0.02268
CRpork						0.00055	0.00042
CRegg						0.00075	0.00054
CRchicken						0.00066	0.00045
Fsoil	--	1	1	1	1	1	1
Fproduce	--	1	1	1	1	1	1
Fdw	--	1	1	1	1	1	1
Ffish	--	0	0	1	1		
Fbeef						1	1
Fmilk						1	1
Fpork						1	1
Feggs						1	1
Fchicken						1	1
ET	hr/day	24	24	24	24	24	24
EF	day/yr	350	350	350	350	350	350
ED	yr	30	6	30	6	40	6
AT_noncancer	yr	30	6	30	6	40	6
AT_cancer	yr	70	70	70	70	70	70
eff	--	0.959	0.959	0.959	0.959	0.959	0.959
edf_nc	--	1	1	1	1	1	1
edf_c	--	0.4286	0.0857	0.4286	0.0857	0.5714	0.0857
Exposure to Receptor's Nursing Infant							
BW_infant	kg	9.4		9.4		9.4	
CRbmilk	kg/day	0.688		0.688		0.688	
edf_nursing	--	1		1		1	

ANIMAL EXPOSURE DATA
DAVINCH TECHNOLOGY

Parameter	Units	Cow (beef)	Cow (dairy)	Pig (pork)	Chicken (egg)	Chicken
F_f	--	1	1	0	0	0
F_s		1	1	1	0	0
F_g		1	1	1	1	1
Qp_f	kg/day	8.8	13.2	0	0	0
Qp_s	kg/day	2.5	4.1	1.4	0	0
Qp_g	kg/day	0.47	3	3.3	0.2	0.2
Qs	kg/day	0.5	0.4	0.37	0.022	0.022

WATERBODY AND WATERSHED SPECIFIC DATA
DAVINCH TECHNOLOGY

Parameter	Units	Waterbody 1	Source	Waterbody 2	Source
Name	--	Lake Vega		Upper Kentucky River	
Waterbody_type	--	Lake		River	
b	--	0.125		0.125	
AI	m^2	1.00E+06	(1)	1.00E+07	(1)
AL	m^2	1.00E+08	(1)	6.00E+08	(1)
Aw	m^2	5.46E+05	(2)	2.00E+06	(1)
C_usle	--	0.1		0.1	
CBS	g/cm^3	1		1	
dbs	m	0.03		0.03	
dwc	m	4.16	(2)	1.6	(1)
dz	m	4.19		1.63	
flipid	--	0.07		0.07	
kb	1/yr	0		1.00	
K_usle	ton/acre	0.39		0.39	
lambda_z	--	4		4	
LS_usle	--	1.5		1.5	
mu_w	g/cm-s	0.0169		0.0169	
OCsed	--	0.04		0.04	
PF_usle	--	1		1	
RF_usle	1/yr	200	(1)	200	(1)
SD	--	0.120		0.048	
theta	--	1.026		1.026	
theta_bs	--	0.6		0.6	
TSS	mg/L	10		10	
Twk	K	298		298	
u	m/s	0	(1)	0.49	(1)
Vfx	m^3/yr	4.00E+09	(1)	4.00E+08	(1)
W	m/s	3.78	(3)	3.78	(3)
Xe	kg/m^2-yr	2.62		2.62	

Aermod receptor on waterbody closest to stacks:

UTM N	m	745250		754650
UTM E	m	4176200		4184800

(1) OBOD Risk Assessment, Table D-6-3

(2) Howlett, David, *Blue Grass Army Depot to Improve Its Dam* , The Joint Ammunition Community's Bullet'n, Vol. 2, Issue 3, March 2007.

(3) 5-year average from meteorological data files

AIR MODELING RESULTS
DAVINCH TECHNOLOGY

Parameter	Units	Rmax	Fmax	Waterbody1	Watershed	Amax	Waterbody2
Cyp	µg-s/g-m^3	1.24	1.24				
Cypb	µg-s/g-m^3	1.24	1.24				
Dytp	s/m^2-yr	0.00471	0.00471	0.001292	0.00471		0.00035
Dytpb	s/m^2-yr	0.00471	0.00471	0.001292	0.00471		0.00035
Dydp	s/m^2-yr	0.0047	0.0047				
Dydpb	s/m^2-yr	0.0047	0.0047				
Dywp	s/m^2-yr	1.00E-05	1.00E-05				
Dywpb	s/m^2-yr	1.00E-05	1.00E-05				
Chp	µg-s/g-m^3					220.417	
Chpb	µg-s/g-m^3					220.417	

Rmax: Maximum air modeling output data from residential exposure scenario locations
Fmax: Maximum air modeling output data from farmer exposure scenario locations
Waterbody: Maximum air modeling output data from receptor grid node locations over water.
Watershed: Maximum air modeling output data from receptor grid node locations over land.
Amax: Maximum air modeling output data from receptor grid node locations over land.

EMISSION RATES AND INPUTS FROM VAPOR AIR MODELING
DAVINCH TECHNOLOGY

		Davinch	Davinch	Davinch	Davinch	Davinch	Davinch	Davinch
CAS No.	COPC Name	Q	Chv	Chv*Q	Cyv	Dytv	Cyv*Q	Dytv*Q
505-60-2	H	9.63E-06	2.27E+02	2.18E-03	1.26E+00	5.10E-04	1.21E-05	4.91E-09
1330-20-7	xylenes	2.46E-05	2.27E+02	5.58E-03	1.26E+00	1.30E-04	2.98E-05	2.55E-07
32598-13-3	3,3',4,4'-TCB (PCB 77)	1.33E-13	2.16E+02	2.88E-11	1.21E+00	1.04E-02	1.61E-13	1.38E-15
31508-00-6	2,3',4,4',5-PeCB (PCB 118)	3.33E-13	2.19E+02	7.29E-11	1.22E+00	7.65E-03	4.08E-13	2.55E-15
32598-14-4	2,3,3',4,4'-PeCB (PCB 105)	1.33E-13	2.18E+02	2.91E-11	1.22E+00	8.14E-03	1.63E-13	1.09E-15
7647-01-0	hydrogen chloride	2.22E-03	2.01E+02	4.47E-01	1.07E+00	8.76E-02	2.39E-03	1.94E-04
7487-94-7	mercuric chloride	1.66E-09	2.06E+02	3.43E-07	1.14E+00	3.74E-02	1.90E-09	6.23E-11
7439-97-6	elemental mercury	1.66E-09	2.27E+02	3.77E-07	1.26E+00	3.00E-05	2.10E-09	4.99E-14
75-01-4	vinyl chloride	7.00E-06	2.26E+02	1.59E-03	1.26E+00	2.80E-04	8.83E-06	1.96E-09

COPC TOXICITY DATA
DAVINCH TECHNOLOGY

CAS No.	COPC Name	COPC Group	Q'	Q	Qa	kse	ksr	ksl	ksv	ks
			g/s	g/s	g/s	1/yr	1/yr	1/yr	1/yr	1/yr
505-60-2	H	Organic	1.00E+00	9.63E-06	9.63E-06		6.162	0.6775	44	23,400
1330-20-7	xylenes	Organic	1.00E+00	2.46E-05	2.46E-05		3.865	0.4249	7,385	7,399
32598-13-3	3,3',4,4'-TCB (PCB 77)	PCDDs, PCDFs, PCBs	1.00E+00	1.33E-13	1.33E-13		0.001	0.0001	0.0050	0.106
31508-00-6	2,3',4,4',5-PeCB (PCB 118)	PCDDs, PCDFs, PCBs	1.00E+00	3.33E-13	3.33E-13		0.0002	0.00002	0.0066	0.03456
32598-14-4	2,3,3',4,4'-PeCB (PCB 105)	PCDDs, PCDFs, PCBs	1.00E+00	1.33E-13	1.33E-13		0.002	0.0003	0.0748	0.10528
7647-01-0	hydrogen chloride	Inorganic	1.00E+00	2.22E-03	2.22E-03		114.3000	12.56744		127
7487-94-7	mercuric chloride	Inorganic	1.00E+00	1.66E-09	1.66E-09		0.000	0.0000	0.000000029	2.92E-04
7439-97-6	elemental mercury	Inorganic	1.00E+00	1.66E-09	1.66E-09		0.02	0.002	4.07	4.083
75-01-4	vinyl chloride	Organic	1.00E+00	7.00E-06	7.00E-06		89.472	9.8375	4.06E+06	4.06E+06

COPC TOXICITY DATA
DAVINCH TECHNOLOGY

CAS No.	COPC Name	VGag	VGbg	Fw	ER	Vdv	AIEC	TEF	URFi	CSFo	RfC	RfDo	BCFfish
		--	--	--	--	cm/s	mg/m^3	--	1/(µg/m^3)	1/(mg/kg/day)	mg/m^3	mg/kg/day	L/kg
505-60-2	H	0.01	0.01	0.600	3.00	0.50	0.07		0.0040	7.70	0.00002	0.00001	14.3
1330-20-7	xylenes	0.01	0.01	0.600	3.00	0.50	22.00				0.10000	0.20000	54
32598-13-3	3,3',4,4'-TCB (PCB 77)	0.01	0.01	0.600	3.00	0.50	0.13	0.00010			0.00040	0.00001	20,184
31508-00-6	2,3',4,4',5-PeCB (PCB 118)	0.01	0.01	0.600	3.00	0.50	0.13	0.00003			0.00130	0.00003	4.42E+04
32598-14-4	2,3,3',4,4'-PeCB (PCB 105)	0.01	0.01	0.600	3.00	0.50	0.13	0.00003			0.00130	0.00003	8,318
7647-01-0	hydrogen chloride	1.00	1.00	0.600	3.00	0.50	2.10				0.02000		3.16E+00
7487-94-7	mercuric chloride	1.00	1.00	0.600	1.00	0.50	4.00				0.00003	0.00030	
7439-97-6	elemental mercury	1.00	1.00	0.600	1.00	0.50	0.0006				0.00030		
75-01-4	vinyl chloride	1.00	1.00	0.600	3.00	0.50	180.0		0.00	0.72	0.10000	0.00300	2.39E+00

COPC TOXICITY DATA
DAVINCH TECHNOLOGY

CAS No.	COPC Name	BSAFfish	Brag	Brroot	Bvag	Babeef	Bamilk	Bapork	Baeggs	Bapoult	Brf/s	Bvforage
		--	--	--	--	day/kg	day/kg	day/kg	day/kg	day/kg	--	--
505-60-2	H		1.5700	0.9095	1	0.00528	1.11E-03	0.00640	0.00222	0.00389	1.570	1
1330-20-7	xylenes		0.57800	2.30715	0.0195	0.01290	2.72E-03	0.01560	0.00544	0.00952	0.5780	0.0195
32598-13-3	3,3',4,4'-TCB (PCB 77)	0.090	0.0068	0.1567	86,196	3.10E-02	6.52E-03	0.03750	0.01304	0.02282	0.007	86,196
31508-00-6	2,3',4,4',5-PeCB (PCB 118)	0.090	0.00297	0.11282	394,247	0.02082	4.38E-03	0.02520	0.00876	0.01534	0.0030	394,247
32598-14-4	2,3,3',4,4'-PeCB (PCB 105)	0.090	0.013	0.2042	25,294	3.76E-02	7.91E-03	4.55E-02	0.01582	0.028	0.013	25,294
7647-01-0	hydrogen chloride					5.23E-05	1.10E-05	0.000063	0.000022	0.000039		
7487-94-7	mercuric chloride		0.01450	0.03600	1,800	0.00522	0.00226	0.000034	0.023925	0.023925		1,800
7439-97-6	elemental mercury											
75-01-4	vinyl chloride		6.0100	246.00000	0	1.05E-03	2.22E-04	0.001276	0.000444	0.000776	6.0100	0

COPC TOXICITY DATA
DAVINCH TECHNOLOGY

CAS No.	COPC Name	Brgrain	Da	Dw	Fv	H	Kdbs	Kds	Kdsw	Kow	ksg
		--	cm^2/s	cm^2/s	--	atm·m^3/mol	cm^3/g	cm^3/g	L/kg	--	1/yr
505-60-2	H	1.5700	0.0650	7.50E-06		0.00003	9.3	2.3	17.6	2.51E+02	23,349
1330-20-7	xylenes	0.57800	0.0850	9.80E-06	1.00000	0.006	15.2	3.8	28.6	1.58E+03	9
32598-13-3	3,3',4,4'-TCB (PCB 77)	0.0068	0.1092	8.00E-06	0.70678	0.000	77,993.8	19,498.4	146,238.4	3.16E+06	0
31508-00-6	2,3',4,4',5-PeCB (PCB 118)	0.00297	0.1033	8.00E-06	0.48035	0.0001	325,132	81,283	609,623	1.32E+07	0
32598-14-4	2,3,3',4,4'-PeCB (PCB 105)	0.0132	0.1033	8.00E-06	0.64677	0.0001	24,663.8	6,166.0	46,244.6	1.00E+06	0
7647-01-0	hydrogen chloride		0.0010	1.00E-05	1.00000	0.0024				1.00E+00	
7487-94-7	mercuric chloride	0.00930	0.0453	5.25E-06	0.85000	0.0000	50,000.0	58,000.0	100,000.0	6.10E-01	
7439-97-6	elemental mercury		0.0109	3.01E-05	1	0.00710	3.00E+03	1.00E+03	1.00E+03	4.17E+00	
75-01-4	vinyl chloride	6.01000	0.1060	1.23E-05	1.00000	0.0270	0.620	0.03700	1.1500	2.51E+01	1

CALCULATIONS FOR ESTIMATING FISH AND SEDIMENT CONCENTRATIONS - LAKE VEGA
DAVINCH TECHNOLOGY

CAS No.	COPC Name	Ds	CstD	LDEP	KG	KL	Kv_overall
		mg/kg/yr	mg/kg	g/yr	m/yr	m/yr	m/yr
505-60-2	H	1.51E-06	6.46E-11	6.80E-03	415,832	144	127
1330-20-7	xylenes	8.50E-06	1.15E-09	1.39E-01	497,710	172	195
32598-13-3	3,3',4,4'-TCB (PCB 77)	3.87E-14	2.33E-14	5.61E-10	588,711	150	125
31508-00-6	2,3',4,4',5-PeCB (PCB 118)	6.80E-14	4.19E-14	7.91E-10	567,122	150	160
32598-14-4	2,3,3',4,4'-PeCB (PCB 105)	3.08E-14	1.86E-14	4.17E-10	567,128	150	158
7647-01-0	hydrogen chloride	6.48E-03	5.11E-05	1.06E+02	25,367	174	185
7487-94-7	mercuric chloride	1.80E-09	1.12E-09	2.91E-05	326,537	113	0
7439-97-6	elemental mercury	1.66E-12	3.76E-13	2.73E-08	125,702	364	410
75-01-4	vinyl chloride	6.54E-08	1.61E-14	1.07E-03	577,059	200	227

CALCULATIONS FOR ESTIMATING FISH AND SEDIMENT CONCENTRATIONS - LAKE VEGA
DAVINCH TECHNOLOGY

CAS No.	COPC Name	Ldif g/yr	LRI g/yr	fwc	fbs	kv 1/yr	kwt 1/yr
505-60-2	H	0.00E+00	4.54E-02	0.933	0.067	3.04E+01	2.84E+01
1330-20-7	xylenes	1.23E-02	2.55E-01	0.897	0.103	4.66E+01	4.18E+01
32598-13-3	3,3',4,4'-TCB (PCB 77)	1.12E-08	1.16E-09	0.004	0.996	1.21E+01	5.27E-02
31508-00-6	2,3',4,4',5-PeCB (PCB 118)	4.22E-09	2.04E-09	0.003	0.997	5.39E+00	1.62E-02
32598-14-4	2,3,3',4,4'-PeCB (PCB 105)	2.62E-09	9.24E-10	0.008	0.992	2.59E+01	2.11E-01
7647-01-0	hydrogen chloride	2.50E+00	1.94E+02	0.996	0.004	4.41E+01	4.39E+01
7487-94-7	mercuric chloride	3.28E-04	5.41E-05	0.006	0.994	1.29E-03	7.10E-06
7439-97-6	elemental mercury	1.62E-06	4.99E-08	0.045	0.955	9.70E+01	4.32E+00
75-01-4	vinyl chloride	9.93E-04	1.96E-03	0.991	0.009	5.43E+01	5.38E+01

CALCULATIONS FOR ESTIMATING FISH AND SEDIMENT CONCENTRATIONS - LAKE VEGA
DAVINCH TECHNOLOGY
(for Noncancer Hazards)

CAS No.	COPC Name	Cs	LR	LE	LT	Cwtot	Cwctot	Cdw	Csb	Cfish
		mg/kg	g/yr	g/yr	g/yr	g/m^3	mg/L	mg/L	mg/kg	mg/kg
505-60-2	H	6.46E-11	1.18E-03	5.71E-06	5.33E-02	1.40E-11	1.32E-11	1.32E-11	1.23E-10	1.89E-10
1330-20-7	xylenes	1.15E-09	1.32E-02	1.04E-04	4.20E-01	1.14E-10	1.03E-10	1.03E-10	1.57E-09	5.57E-09
32598-13-3	3,3',4,4'-TCB (PCB 77)	2.33E-14	5.41E-11	2.18E-09	1.51E-08	8.63E-16	3.79E-18	1.54E-18	1.20E-13	1.89E-14
31508-00-6	2,3',4,4',5-PeCB (PCB 118)	4.19E-14	2.33E-11	3.92E-09	1.10E-08	9.08E-16	2.76E-18	3.89E-19	1.26E-13	1.99E-14
32598-14-4	2,3,3',4,4'-PeCB (PCB 105)	1.86E-14	1.36E-10	1.74E-09	5.83E-09	1.76E-16	1.45E-18	9.90E-19	2.44E-14	3.84E-15
7647-01-0	hydrogen chloride	5.11E-05	1.73E+04	0.00E+00	1.77E+04	4.32E-06	4.34E-06	4.34E-06	0.00E+00	1.37E-05
7487-94-7	mercuric chloride	1.12E-09	8.77E-07	3.50E-05	4.47E-04	2.03E-11	1.13E-13	5.63E-14	2.81E-09	0.00E+00
7439-97-6	elemental mercury	3.76E-13	1.70E-08	1.17E-08	1.73E-06	9.18E-15	4.12E-16	4.08E-16	1.22E-12	0.00E+00
75-01-4	vinyl chloride	1.61E-14	4.27E-06	3.26E-10	4.03E-03	9.86E-13	9.84E-13	9.84E-13	6.10E-13	2.35E-12

CALCULATIONS FOR ESTIMATING FISH AND SEDIMENT CONCENTRATIONS - LAKE VEGA
DAVINCH TECHNOLOGY
(for Cancer Risks)

CAS No.	COPC Name	Cs	LR	LE	LT	Cwtot	Cwctot	Cdw	Csb	Cfish
		mg/kg	g/yr	g/yr	g/yr	g/m^3	mg/L	mg/L	mg/kg	mg/kg
505-60-2	H	6.46E-11	1.18E-03	5.71E-06	5.33E-02	1.40E-11	1.32E-11	1.32E-11	1.23E-10	1.89E-10
1330-20-7	xylenes	1.15E-09	1.32E-02	1.04E-04	4.20E-01	1.14E-10	1.03E-10	1.03E-10	1.57E-09	5.57E-09
32598-13-3	3,3',4,4'-TCB (PCB 77)	1.18E-14	2.74E-11	1.10E-09	1.40E-08	8.00E-16	3.51E-18	1.43E-18	1.11E-13	1.75E-14
31508-00-6	2,3',4,4',5-PeCB (PCB 118)	2.10E-14	1.17E-11	1.97E-09	9.03E-09	7.46E-16	2.27E-18	3.19E-19	1.04E-13	1.64E-14
32598-14-4	2,3,3',4,4'-PeCB (PCB 105)	9.39E-15	6.89E-11	8.77E-10	4.91E-09	1.48E-16	1.22E-18	8.33E-19	2.05E-14	3.23E-15
7647-01-0	hydrogen chloride	5.05E-05	1.71E+04	0.00E+00	1.74E+04	4.27E-06	4.28E-06	4.28E-06	0.00E+00	1.35E-05
7487-94-7	mercuric chloride	5.62E-10	4.39E-07	1.75E-05	4.29E-04	1.94E-11	1.08E-13	5.40E-14	2.70E-09	0.00E+00
7439-97-6	elemental mercury	2.60E-13	1.18E-08	8.10E-09	1.72E-06	9.13E-15	4.10E-16	4.06E-16	1.22E-12	0.00E+00
75-01-4	vinyl chloride	1.61E-14	4.27E-06	3.26E-10	4.03E-03	9.86E-13	9.84E-13	9.84E-13	6.10E-13	2.35E-12

CALCULATIONS FOR ESTIMATING DRINKING WATER AND SEDIMENT CONCENTRATIONS - KENTUCKY RIVER
DAVINCH TECHNOLOGY

CAS No.	COPC Name	Ds	CstD	LDEP	KG	KL	Kv_overall	Ldif	LRI	fwc	fbs	kv	kwt
		mg/kg/yr	mg/kg	g/yr	m/yr	m/yr	m/yr	g/yr	g/yr			1/yr	1/yr
505-60-2	H	1.51E-06	6.46E-11	6.74E-03	36,500	474	47		4.54E-01	0.843	0.157	28.5	24.2
1330-20-7	xylenes	8.50E-06	1.15E-09	5.10E-01	36,500	541	582	1.35E-01	2.55E+00	0.771	0.229	356.9	275.4
32598-13-3	3,3',4,4'-TCB (PCB 77)	3.87E-14	2.33E-14	1.98E-09	36,500	489	27	9.00E-09	1.16E-08	0.002	0.998	6.8	1.0
31508-00-6	2,3',4,4',5-PeCB (PCB 118)	6.80E-14	4.19E-14	2.57E-09	36,500	489	129	1.25E-08	2.04E-08	0.0012	0.999	11.2	1.0
32598-14-4	2,3,3',4,4'-PeCB (PCB 105)	3.08E-14	1.86E-14	1.44E-09	36,500	489	115	6.94E-09	9.24E-09	0.003	0.997	48.1	1.1
7647-01-0	hydrogen chloride	6.48E-03	5.11E-05	3.89E+02	36,500	547	538	2.66E+01	1.94E+03	0.9889	0.011	330.1	326.5
7487-94-7	mercuric chloride	1.80E-09	1.12E-09	1.06E-04	36,500	396	0	1.34E-04	5.41E-04	0.002	0.998	0.0	1.0
7439-97-6	elemental mercury	1.66E-12	3.76E-13	9.99E-08	36,500	949	990	1.43E-05	4.99E-07	0.018	0.9824	601.3	11.6
75-01-4	vinyl chloride	6.54E-08	1.61E-14	3.92E-03	36,500	606	679	1.09E-02	1.96E-02	0.978	0.022	416.7	407.4

CALCULATIONS FOR ESTIMATING DRINKING WATER AND SEDIMENT CONCENTRATIONS - KENTUCKY RIVER
DAVINCH TECHNOLOGY
(for Noncancer Hazards)

CAS No.	COPC Name	Cs mg/kg	LR g/yr	LE g/yr	LT g/yr	Cwtot g/m^3	Cwctot mg/L	Cdw mg/L	Csb mg/kg
505-60-2	H	6.46E-11	7.05E-03	1.36E-05	4.67E-01	1.12E-09	9.65E-10	9.64E-10	9.01E-09
1330-20-7	xylenes	1.15E-09	7.86E-02	2.47E-04	3.27E+00	2.71E-09	2.13E-09	2.13E-09	3.25E-08
32598-13-3	3,3',4,4'-TCB (PCB 77)	2.33E-14	3.23E-10	5.19E-09	2.81E-08	7.09E-15	1.21E-17	4.93E-18	3.84E-13
31508-00-6	2,3',4,4',5-PeCB (PCB 118)	4.19E-14	1.39E-10	9.34E-09	4.49E-08	1.19E-14	1.41E-17	1.99E-18	6.48E-13
32598-14-4	2,3,3',4,4'-PeCB (PCB 105)	1.86E-14	8.12E-10	4.13E-09	2.26E-08	4.51E-15	1.45E-17	9.90E-18	2.44E-13
7647-01-0	hydrogen chloride	5.11E-05	1.03E+05	0.00E+00	1.06E+05	7.24E-05	7.30E-05	7.30E-05	0.00E+00
7487-94-7	mercuric chloride	1.12E-09	5.23E-06	8.34E-05	8.70E-04	2.12E-10	4.60E-13	2.30E-13	1.15E-08
7439-97-6	elemental mercury	3.76E-13	1.01E-07	2.79E-08	1.51E-05	3.36E-13	6.03E-15	5.98E-15	1.79E-11
75-01-4	vinyl chloride	1.61E-14	2.55E-05	7.78E-10	3.44E-02	2.00E-11	1.99E-11	1.99E-11	1.24E-11

CALCULATIONS FOR ESTIMATING DRINKING WATER AND SEDIMENT CONCENTRATIONS - KENTUCKY RIVER
DAVINCH TECHNOLOGY
(for Cancer Risks)

CAS No.	COPC Name	Cs mg/kg	LR g/yr	LE g/yr	LT g/yr	Cwtot g/m^3	Cwctot mg/L	Cdw mg/L	Csb mg/kg
505-60-2	H	6.46E-11	7.05E-03	1.36E-05	4.67E-01	1.12E-09	9.65E-10	9.64E-10	9.01E-09
1330-20-7	xylenes	1.15E-09	7.86E-02	2.47E-04	3.27E+00	2.71E-09	2.13E-09	2.13E-09	3.25E-08
32598-13-3	3,3',4,4'-TCB (PCB 77)	1.18E-14	1.63E-10	2.62E-09	2.54E-08	6.40E-15	1.10E-17	4.45E-18	3.47E-13
31508-00-6	2,3',4,4',5-PeCB (PCB 118)	2.10E-14	6.98E-11	4.68E-09	4.02E-08	1.07E-14	1.27E-17	1.78E-18	5.80E-13
32598-14-4	2,3,3',4,4'-PeCB (PCB 105)	9.39E-15	4.11E-10	2.09E-09	2.01E-08	4.02E-15	1.29E-17	8.83E-18	2.18E-13
7647-01-0	hydrogen chloride	5.05E-05	1.02E+05	0.00E+00	1.04E+05	7.15E-05	7.21E-05	7.21E-05	0.00E+00
7487-94-7	mercuric chloride	5.62E-10	2.61E-06	4.17E-05	8.26E-04	2.01E-10	4.36E-13	2.18E-13	1.09E-08
7439-97-6	elemental mercury	2.60E-13	7.01E-08	1.93E-08	1.50E-05	3.35E-13	6.02E-15	5.96E-15	1.79E-11
75-01-4	vinyl chloride	1.61E-14	2.55E-05	7.78E-10	3.44E-02	2.00E-11	1.99E-11	1.99E-11	1.24E-11

CALCULATIONS FOR ESTIMATING DRINKING WATER AND SEDIMENT CONCENTRATIONS - KENTUCKY RIVER
DAVINCH TECHNOLOGY
(for Cancer Risks - Exposure Duration > 30 years)

CAS No.	COPC Name	Cs mg/kg	LR g/yr	LE g/yr	LT g/yr	Cwtot g/m^3	Cwctot mg/L	Cdw mg/L	Csb mg/kg
505-60-2	H	1.01E-12	1.10E-04	2.12E-07	4.60E-01	1.11E-09	9.50E-10	9.50E-10	8.87E-09
1330-20-7	xylenes	1.79E-11	1.22E-03	3.85E-06	3.20E+00	2.65E-09	2.08E-09	2.08E-09	3.17E-08
32598-13-3	3,3',4,4'-TCB (PCB 77)	5.61E-15	7.76E-11	1.25E-09	2.39E-08	6.03E-15	1.03E-17	4.19E-18	3.27E-13
31508-00-6	2,3',4,4',5-PeCB (PCB 118)	2.29E-14	7.59E-11	5.09E-09	4.06E-08	1.08E-14	1.28E-17	1.80E-18	5.86E-13
32598-14-4	2,3,3',4,4'-PeCB (PCB 105)	4.49E-15	1.96E-10	9.99E-10	1.88E-08	3.76E-15	1.21E-17	8.25E-18	2.04E-13
7647-01-0	hydrogen chloride	7.96E-07	1.61E+03	0.00E+00	3.97E+03	2.72E-06	2.74E-06	2.74E-06	0.00E+00
7487-94-7	mercuric chloride	1.11E-09	5.16E-06	8.23E-05	8.69E-04	2.12E-10	4.59E-13	2.30E-13	1.15E-08
7439-97-6	elemental mercury	6.35E-15	1.71E-09	4.71E-10	1.49E-05	3.33E-13	5.98E-15	5.92E-15	1.78E-11
75-01-4	vinyl chloride	2.50E-16	3.97E-07	1.21E-11	3.44E-02	2.00E-11	1.99E-11	1.99E-11	1.24E-11

CALCULATIONS FOR LAND BASED MEDIA CONCENTRATIONS
DAVINCH TECHNOLOGY
"Rmax"

CAS No.	COPC Name	Ca µg/m^3	Ds mg/kg/yr	CstD mg/kg	Pd_ag mg/kg	Pv_ag mg/kg
505-60-2	H	1.19E-05	1.51E-06	6.46E-11	4.14E-07	
1330-20-7	xylenes	2.98E-05	8.50E-06	1.15E-09	2.66E-14	1.19E-16
32598-13-3	3,3',4,4'-TCB (PCB 77)	1.63E-13	3.87E-14	2.33E-14	1.68E-15	1.09E-26
31508-00-6	2,3',4,4',5-PeCB (PCB 118)	4.11E-13	6.80E-14	4.19E-14	7.44E-15	2.14E-25
32598-14-4	2,3,3',4,4'-PeCB (PCB 105)	1.64E-13	3.08E-14	1.86E-14	2.02E-15	2.96E-27
7647-01-0	hydrogen chloride	2.39E-03	6.48E-03	5.11E-05		
7487-94-7	mercuric chloride	1.93E-09	1.80E-09	1.12E-09	1.07E-11	4.03E-18
7439-97-6	elemental mercury	2.10E-09	1.66E-12	3.76E-13		
75-01-4	vinyl chloride	8.83E-06	6.54E-08	1.61E-14		3.30E-18

CALCULATIONS FOR LAND BASED MEDIA CONCENTRATIONS
DAVINCH TECHNOLOGY
("Rmax" for Noncancer Hazards)

CAS No.	COPC Name	Cs mg/kg	Pr_ag mg/kg	Pag mg/kg	Pr_bg mg/kg
505-60-2	H	6.46E-11	1.01E-10	4.14E-07	5.88E-13
1330-20-7	xylenes	1.15E-09	6.64E-10	6.64E-10	2.65E-11
32598-13-3	3,3',4,4'-TCB (PCB 77)	2.33E-14	1.58E-16	1.84E-15	3.65E-17
31508-00-6	2,3',4,4',5-PeCB (PCB 118)	4.19E-14	1.25E-16	7.57E-15	4.73E-17
32598-14-4	2,3,3',4,4'-PeCB (PCB 105)	1.86E-14	2.45E-16	2.27E-15	3.79E-17
7647-01-0	hydrogen chloride	5.11E-05	0.00E+00	0.00E+00	0.00E+00
7487-94-7	mercuric chloride	1.12E-09	1.63E-11	2.70E-11	4.05E-11
7439-97-6	elemental mercury	3.76E-13	0.00E+00	0.00E+00	0.00E+00
75-01-4	vinyl chloride	1.61E-14	9.66E-14	9.66E-14	3.96E-12

CALCULATIONS FOR LAND BASED MEDIA CONCENTRATIONS
DAVINCH TECHNOLOGY
("Rmax" for Cancer Risks)

CAS No.	COPC Name	Cs mg/kg	Pr_ag mg/kg	Pag mg/kg	Pr_bg mg/kg
505-60-2	H	6.46E-11	1.01E-10	4.14E-07	5.88E-13
1330-20-7	xylenes	1.15E-09	6.64E-10	6.64E-10	2.65E-11
32598-13-3	3,3',4,4'-TCB (PCB 77)	1.18E-14	7.99E-17	1.76E-15	1.85E-17
31508-00-6	2,3',4,4',5-PeCB (PCB 118)	2.10E-14	6.25E-17	7.50E-15	2.37E-17
32598-14-4	2,3,3',4,4'-PeCB (PCB 105)	9.39E-15	1.24E-16	2.15E-15	1.92E-17
7647-01-0	hydrogen chloride	5.05E-05	0.00E+00	0.00E+00	0.00E+00
7487-94-7	mercuric chloride	5.62E-10	8.15E-12	1.89E-11	2.02E-11
7439-97-6	elemental mercury	2.60E-13	0.00E+00	0.00E+00	0.00E+00
75-01-4	vinyl chloride	1.61E-14	9.66E-14	9.66E-14	3.96E-12

CALCULATIONS FOR LAND BASED MEDIA CONCENTRATIONS
DAVINCH TECHNOLOGY
("Fmax")

CAS No.	COPC Name	Ca	Ds	CstD	Pd_ag	Pd_f	Pd_s	Pv_ag	Pv_f	Pv_s
		µg/m^3	mg/kg/yr	mg/kg	mg/kg	mg/kg	mg/kg	mg/kg	mg/kg	mg/kg
505-60-2	H	1.19E-05	1.51E-06	6.46E-11	4.14E-07	4.64E-06	1.37E-06			
1330-20-7	xylenes	2.98E-05	8.50E-06	1.15E-09	2.66E-14	2.98E-13	8.77E-14	4.84E-12	4.84E-10	2.42E-10
32598-13-3	3,3',4,4'-TCB (PCB 77)	1.63E-13	3.87E-14	2.33E-14	1.68E-15	1.88E-14	5.55E-15	8.19E-14	8.19E-12	4.10E-12
31508-00-6	2,3',4,4',5-PeCB (PCB 118)	4.11E-13	6.80E-14	4.19E-14	7.44E-15	8.35E-14	2.46E-14	6.43E-13	6.43E-11	3.22E-11
32598-14-4	2,3,3',4,4'-PeCB (PCB 105)	1.64E-13	3.08E-14	1.86E-14	2.02E-15	2.27E-14	6.68E-15	2.22E-14	2.22E-12	1.11E-12
7647-01-0	hydrogen chloride	2.39E-03	6.48E-03	5.11E-05						
7487-94-7	mercuric chloride	1.93E-09	1.80E-09	1.12E-09	1.07E-11	1.20E-10	3.54E-11	2.42E-09	2.42E-09	1.21E-09
7439-97-6	elemental mercury	2.10E-09	1.66E-12	3.76E-13						
75-01-4	vinyl chloride	8.83E-06	6.54E-08	1.61E-14				4.72E-13	4.72E-13	2.36E-13

CALCULATIONS FOR LAND BASED MEDIA CONCENTRATIONS
DAVINCH TECHNOLOGY
("Fmax" for Noncancer Hazards)

CAS No.	COPC Name	Cs	Pr_ag	Pr_f	Pr_s	Pag	Pr_bg	Pf
		mg/kg	mg/kg	mg/kg	mg/kg	mg/kg	mg/kg	mg/kg
505-60-2	H	6.46E-11	1.01E-10	1.01E-10	1.01E-10	4.14E-07	5.88E-13	4.64E-06
1330-20-7	xylenes	1.15E-09	6.64E-10	6.64E-10	6.64E-10	6.69E-10	2.65E-11	1.15E-09
32598-13-3	3,3',4,4'-TCB (PCB 77)	2.33E-14	1.58E-16	1.58E-16	1.58E-16	8.38E-14	3.65E-17	8.21E-12
31508-00-6	2,3',4,4',5-PeCB (PCB 118)	4.19E-14	1.25E-16	1.25E-16	1.25E-16	6.51E-13	4.73E-17	6.44E-11
32598-14-4	2,3,3',4,4'-PeCB (PCB 105)	1.86E-14	2.45E-16	2.45E-16	2.45E-16	2.45E-14	3.79E-17	2.24E-12
7647-01-0	hydrogen chloride	5.11E-05						
7487-94-7	mercuric chloride	1.12E-09	1.63E-11			2.45E-09	4.05E-11	2.54E-09
7439-97-6	elemental mercury	3.76E-13						
75-01-4	vinyl chloride	1.61E-14	9.66E-14	9.66E-14	9.66E-14	5.68E-13	3.96E-12	5.68E-13

CALCULATIONS FOR LAND BASED MEDIA CONCENTRATIONS
DAVINCH TECHNOLOGY
("Fmax" for Noncancer Hazards)

CAS No.	COPC Name	Ps	Pr_g	Abeef	Amilk	Apork	Aegg	Achicken
		mg/kg	mg/kg	mg/kg	mg/kg	mg/kg	mg/kg	mg/kg
505-60-2	H	1.37E-06	1.01E-10	2.34E-07	7.42E-08	1.22E-08	4.82E-14	8.45E-14
1330-20-7	xylenes	9.06E-10	6.64E-10	1.71E-10	5.80E-11	6.06E-11	8.60E-13	1.50E-12
32598-13-3	3,3',4,4'-TCB (PCB 77)	4.10E-12	1.58E-16	2.56E-12	8.17E-13	2.16E-13	7.10E-18	1.24E-17
31508-00-6	2,3',4,4',5-PeCB (PCB 118)	3.22E-11	1.25E-16	1.35E-11	4.31E-12	1.14E-12	8.30E-18	1.45E-17
32598-14-4	2,3,3',4,4'-PeCB (PCB 105)	1.12E-12	2.45E-16	8.46E-13	2.70E-13	7.14E-14	7.24E-18	1.27E-17
7647-01-0	hydrogen chloride			1.34E-09	2.25E-10	1.20E-09	2.48E-11	4.34E-11
7487-94-7	mercuric chloride	1.25E-09	1.05E-11	1.36E-10	8.86E-11	7.45E-14	6.42E-13	6.42E-13
7439-97-6	elemental mercury							
75-01-4	vinyl chloride	3.33E-13	9.66E-14	6.20E-15	2.03E-15	1.01E-15	8.73E-18	1.53E-17

CALCULATIONS FOR LAND BASED MEDIA CONCENTRATIONS
DAVINCH TECHNOLOGY
("Fmax" for Child Cancer Risks)

CAS No.	COPC Name	Cs mg/kg	Pr_ag mg/kg	Pr_f mg/kg	Pr_s mg/kg	Pag mg/kg	Pr_bg mg/kg	Pf mg/kg
505-60-2	H	6.46E-11	1.01E-10	1.01E-10	1.01E-10	4.14E-07	5.88E-13	4.64E-06
1330-20-7	xylenes	1.15E-09	6.64E-10	6.64E-10	6.64E-10	6.69E-10	2.65E-11	1.15E-09
32598-13-3	3,3',4,4'-TCB (PCB 77)	1.18E-14	7.99E-17	7.99E-17	7.99E-17	8.37E-14	1.85E-17	8.21E-12
31508-00-6	2,3',4,4',5-PeCB (PCB 118)	2.10E-14	6.25E-17	6.25E-17	6.25E-17	6.51E-13	2.37E-17	6.44E-11
32598-14-4	2,3,3',4,4'-PeCB (PCB 105)	9.39E-15	1.24E-16	1.24E-16	1.24E-16	2.43E-14	1.92E-17	2.24E-12
7647-01-0	hydrogen chloride	5.05E-05						
7487-94-7	mercuric chloride	5.62E-10	8.15E-12			2.44E-09	2.02E-11	2.54E-09
7439-97-6	elemental mercury	2.60E-13						
75-01-4	vinyl chloride	1.61E-14	9.66E-14	9.66E-14	9.66E-14	5.68E-13	3.96E-12	5.68E-13

CALCULATIONS FOR LAND BASED MEDIA CONCENTRATIONS
DAVINCH TECHNOLOGY
("Fmax" for Child Cancer Risks)

CAS No.	COPC Name	Ps mg/kg	Pr_g mg/kg	Abeef mg/kg	Amilk mg/kg	Apork mg/kg	Aegg mg/kg	Achicken mg/kg
505-60-2	H	1.37E-06	1.01E-10	2.34E-07	7.42E-08	1.22E-08	4.82E-14	8.44E-14
1330-20-7	xylenes	9.06E-10	6.64E-10	1.71E-10	5.80E-11	6.06E-11	8.60E-13	1.50E-12
32598-13-3	3,3',4,4'-TCB (PCB 77)	4.10E-12	7.99E-17	2.56E-12	8.17E-13	2.16E-13	3.59E-18	6.28E-18
31508-00-6	2,3',4,4',5-PeCB (PCB 118)	3.22E-11	6.25E-17	1.35E-11	4.31E-12	1.14E-12	4.17E-18	7.29E-18
32598-14-4	2,3,3',4,4'-PeCB (PCB 105)	1.12E-12	1.24E-16	8.46E-13	2.70E-13	7.12E-14	3.66E-18	6.40E-18
7647-01-0	hydrogen chloride			1.32E-09	2.22E-10	1.18E-09	2.45E-11	4.28E-11
7487-94-7	mercuric chloride	1.25E-09	5.23E-12	1.35E-10	8.81E-11	6.69E-14	3.21E-13	3.21E-13
7439-97-6	elemental mercury							
75-01-4	vinyl chloride	3.33E-13	9.66E-14	6.20E-15	2.03E-15	1.01E-15	8.73E-18	1.53E-17

CALCULATIONS FOR LAND BASED MEDIA CONCENTRATIONS
DAVINCH TECHNOLOGY
("Fmax" for Adult Cancer Risks)

CAS No.	COPC Name	Cs	Pr_ag	Pr_f	Pr_s	Pag	Pr_bg	Pf
		mg/kg	mg/kg	mg/kg	mg/kg	mg/kg	mg/kg	mg/kg
505-60-2	H	1.01E-12	1.58E-12	1.58E-12	1.58E-12	4.14E-07	9.15E-15	4.64E-06
1330-20-7	xylenes	1.79E-11	1.03E-11	1.03E-11	1.03E-11	1.52E-11	4.13E-13	4.95E-10
32598-13-3	3,3',4,4'-TCB (PCB 77)	5.61E-15	3.80E-17	3.80E-17	3.80E-17	8.36E-14	8.78E-18	8.21E-12
31508-00-6	2,3',4,4',5-PeCB (PCB 118)	2.29E-14	6.79E-17	6.79E-17	6.79E-17	6.51E-13	2.58E-17	6.44E-11
32598-14-4	2,3,3',4,4'-PeCB (PCB 105)	4.49E-15	5.91E-17	5.91E-17	5.91E-17	2.43E-14	9.16E-18	2.24E-12
7647-01-0	hydrogen chloride	7.96E-07						
7487-94-7	mercuric chloride	1.11E-09	1.61E-11			2.45E-09	3.99E-11	2.54E-09
7439-97-6	elemental mercury	6.35E-15						
75-01-4	vinyl chloride	2.50E-16	1.51E-15	1.51E-15	1.51E-15	4.73E-13	6.16E-14	4.73E-13

CALCULATIONS FOR LAND BASED MEDIA CONCENTRATIONS
DAVINCH TECHNOLOGY
("Fmax" for Adult Cancer Risks)

CAS No.	COPC Name	Ps	Pr_g	Abeef	Amilk	Apork	Aegg	Achicken
		mg/kg	mg/kg	mg/kg	mg/kg	mg/kg	mg/kg	mg/kg
505-60-2	H	1.37E-06	1.58E-12	2.34E-07	7.42E-08	1.22E-08	7.51E-16	1.32E-15
1330-20-7	xylenes	2.52E-10	1.03E-11	6.45E-11	2.07E-11	6.15E-12	1.34E-14	2.34E-14
32598-13-3	3,3',4,4'-TCB (PCB 77)	4.10E-12	3.80E-17	2.56E-12	8.17E-13	2.15E-13	1.71E-18	2.99E-18
31508-00-6	2,3',4,4',5-PeCB (PCB 118)	3.22E-11	6.79E-17	1.35E-11	4.31E-12	1.14E-12	4.53E-18	7.93E-18
32598-14-4	2,3,3',4,4'-PeCB (PCB 105)	1.12E-12	5.91E-17	8.46E-13	2.70E-13	7.11E-14	1.75E-18	3.06E-18
7647-01-0	hydrogen chloride			2.08E-11	3.51E-12	1.87E-11	3.86E-13	6.75E-13
7487-94-7	mercuric chloride	1.25E-09	1.03E-11	1.36E-10	8.86E-11	7.43E-14	6.33E-13	6.33E-13
7439-97-6	elemental mercury							
75-01-4	vinyl chloride	2.37E-13	1.51E-15	5.01E-15	1.60E-15	4.30E-16	1.36E-19	2.38E-19

COPC INTAKE AND CANCER RISK ESTIMATES
DAVINCH TECHNOLOGY
(Adult Resident)

CAS No.	COPC Name	Isoil mg/kg/day	Iproduce mg/kg/day	Idw mg/kg/day	I_oral mg/kg/day	I_inh mg/kg/day	Cancer soil	Cancer produce	Cancer drinking water	Cancer oral	Cancer inhalation
505-60-2	H	9.23E-17	1.32E-10	1.93E-11	1.52E-10	1.40E-09	2.9E-16	4.2E-10	6.1E-11	4.8E-10	2.0E-08
1330-20-7	xylenes	1.64E-15	6.21E-13	4.26E-11	4.32E-11	3.48E-09					
32598-13-3	3,3',4,4'-TCB (PCB 77)	1.68E-20	6.14E-19	8.90E-20	7.20E-19	1.90E-17					
31508-00-6	2,3',4,4',5-PeCB (PCB 118)	3.01E-20	2.44E-18	3.57E-20	2.51E-18	4.80E-17					
32598-14-4	2,3,3',4,4'-PeCB (PCB 105)	1.34E-20	7.65E-19	1.77E-19	9.55E-19	1.91E-17					
7647-01-0	hydrogen chloride	7.21E-11		1.44E-06	1.44E-06	2.79E-07					
7487-94-7	mercuric chloride	8.03E-16	1.38E-14	4.36E-15	1.90E-14	2.25E-13					
7439-97-6	elemental mercury	3.71E-19		1.19E-16	1.20E-16	2.46E-13					
75-01-4	vinyl chloride	2.30E-20	6.44E-16	3.99E-13	3.99E-13	1.03E-09	6.8E-21	1.9E-16	1.2E-13	1.2E-13	1.6E-11
TOTAL		**N/A**	**N/A**	**N/A**	**N/A**	**N/A**	**2.92E-16**	**4.19E-10**	**6.12E-11**	**4.80E-10**	**1.96E-08**

COPC INTAKE AND CANCER RISK ESTIMATES
DAVINCH TECHNOLOGY
(Child Resident)

CAS No.	COPC Name	Isoil mg/kg/day	Iproduce mg/kg/day	Idw mg/kg/day	I_oral mg/kg/day	I_inh mg/kg/day	Cancer soil	Cancer produce	Cancer drinking water	Cancer oral	Cancer inhalation
505-60-2	H	8.61E-16	3.19E-10	4.31E-11	3.62E-10	7.80E-10	5.45E-16	2.02E-10	2.73E-11	2.29E-10	3.93E-09
1330-20-7	xylenes	1.53E-14	1.51E-12	9.52E-11	9.67E-11	1.95E-09					
32598-13-3	3,3',4,4'-TCB (PCB 77)	1.57E-19	1.48E-18	1.99E-19	1.83E-18	1.06E-17					
31508-00-6	2,3',4,4',5-PeCB (PCB 118)	2.81E-19	5.88E-18	7.96E-20	6.24E-18	2.68E-17					
32598-14-4	2,3,3',4,4'-PeCB (PCB 105)	1.25E-19	1.84E-18	3.94E-19	2.36E-18	1.07E-17					
7647-01-0	hydrogen chloride	6.73E-10		3.22E-06	3.22E-06	1.56E-07					
7487-94-7	mercuric chloride	7.49E-15	3.14E-14	9.74E-15	4.87E-14	1.26E-13					
7439-97-6	elemental mercury	3.47E-18		2.66E-16	2.70E-16	1.37E-13					
75-01-4	vinyl chloride	2.14E-19	1.13E-15	8.91E-13	8.92E-13	5.77E-10	1.27E-20	6.68E-17	5.27E-14	5.28E-14	3.11E-12
TOTAL		**N/A**	**N/A**	**N/A**	**N/A**	**N/A**	**5.45E-16**	**2.02E-10**	**2.73E-11**	**2.29E-10**	**3.93E-09**

COPC INTAKE AND CANCER RISK ESTIMATES
DAVINCH TECHNOLOGY
(Fisher)

CAS No.	COPC Name	Isoil mg/kg/day	Iproduce mg/kg/day	Idw mg/kg/day	Ifish mg/kg/day	I_oral mg/kg/day
505-60-2	H	9.23E-17	1.32E-10	1.93E-11	2.36E-13	1.52E-10
1330-20-7	xylenes	1.64E-15	6.21E-13	4.26E-11	6.96E-12	5.02E-11
32598-13-3	3,3',4,4'-TCB (PCB 77)	1.68E-20	6.14E-19	8.90E-20	2.19E-17	2.26E-17
31508-00-6	2,3',4,4',5-PeCB (PCB 118)	3.01E-20	2.44E-18	3.57E-20	2.04E-17	2.29E-17
32598-14-4	2,3,3',4,4'-PeCB (PCB 105)	1.34E-20	7.65E-19	1.77E-19	4.04E-18	5.00E-18
7647-01-0	hydrogen chloride	7.21E-11		1.44E-06	1.69E-08	1.46E-06
7487-94-7	mercuric chloride	8.03E-16	1.38E-14	4.36E-15		1.90E-14
7439-97-6	elemental mercury	3.71E-19		1.19E-16		1.20E-16
75-01-4	vinyl chloride	2.30E-20	6.44E-16	3.99E-13	2.94E-15	4.02E-13
TOTAL		**N/A**	**N/A**	**N/A**	**N/A**	**N/A**

COPC INTAKE AND CANCER RISK ESTIMATES
DAVINCH TECHNOLOGY
(Fisher)

CAS No.	COPC Name	I_inh mg/kg/day	Cancer soil	Cancer produce	Cancer drinking water	Cancer fish	Cancer oral	Cancer inhalation
505-60-2	H	1.40E-09	2.92E-16	4.19E-10	6.10E-11	7.47E-13	4.81E-10	1.96E-08
1330-20-7	xylenes	3.48E-09						
32598-13-3	3,3',4,4'-TCB (PCB 77)	1.90E-17						
31508-00-6	2,3',4,4',5-PeCB (PCB 118)	4.80E-17						
32598-14-4	2,3,3',4,4'-PeCB (PCB 105)	1.91E-17						
7647-01-0	hydrogen chloride	2.79E-07						
7487-94-7	mercuric chloride	2.25E-13						
7439-97-6	elemental mercury	2.46E-13						
75-01-4	vinyl chloride	1.03E-09	6.80E-21	1.90E-16	1.18E-13	8.70E-16	1.19E-13	1.56E-11
TOTAL		**N/A**	**2.92E-16**	**4.19E-10**	**6.12E-11**	**7.48E-13**	**4.81E-10**	**1.96E-08**

COPC INTAKE AND CANCER RISK ESTIMATES
DAVINCH TECHNOLOGY
(Fisher Child)

CAS No.	COPC Name	Isoil mg/kg/day	Iproduce mg/kg/day	Idw mg/kg/day	Ifish mg/kg/day	I_oral mg/kg/day	I_inh mg/kg/day
505-60-2	H	8.61E-16	3.19E-10	4.31E-11	1.66E-13	3.62E-10	7.80E-10
1330-20-7	xylenes	1.53E-14	1.51E-12	9.52E-11	4.90E-12	1.02E-10	1.95E-09
32598-13-3	3,3',4,4'-TCB (PCB 77)	1.57E-19	1.48E-18	1.99E-19	1.54E-17	1.72E-17	1.06E-17
31508-00-6	2,3',4,4',5-PeCB (PCB 118)	2.81E-19	5.88E-18	7.96E-20	1.44E-17	2.06E-17	2.68E-17
32598-14-4	2,3,3',4,4'-PeCB (PCB 105)	1.25E-19	1.84E-18	3.94E-19	2.85E-18	5.21E-18	1.07E-17
7647-01-0	hydrogen chloride	6.73E-10		3.22E-06	1.19E-08	3.23E-06	1.56E-07
7487-94-7	mercuric chloride	7.49E-15	3.14E-14	9.74E-15		4.87E-14	1.26E-13
7439-97-6	elemental mercury	3.47E-18		2.66E-16		2.70E-16	1.37E-13
75-01-4	vinyl chloride	2.14E-19	1.13E-15	8.91E-13	2.07E-15	8.94E-13	5.77E-10
TOTAL		**N/A**	**N/A**	**N/A**	**N/A**	**N/A**	**N/A**

COPC INTAKE AND CANCER RISK ESTIMATES
DAVINCH TECHNOLOGY
(Fisher Child)

CAS No.	COPC Name	Cancer soil	Cancer produce	Cancer drinking water	Cancer fish	Cancer oral	Cancer inhalation
505-60-2	H	5.45E-16	2.02E-10	2.73E-11	1.05E-13	2.29E-10	3.93E-09
1330-20-7	xylenes						
32598-13-3	3,3',4,4'-TCB (PCB 77)						
31508-00-6	2,3',4,4',5-PeCB (PCB 118)						
32598-14-4	2,3,3',4,4'-PeCB (PCB 105)						
7647-01-0	hydrogen chloride						
7487-94-7	mercuric chloride						
7439-97-6	elemental mercury						
75-01-4	vinyl chloride	1.27E-20	6.68E-17	5.27E-14	1.22E-16	5.29E-14	3.11E-12
TOTAL		**5.45E-16**	**2.02E-10**	**2.73E-11**	**1.05E-13**	**2.29E-10**	**3.93E-09**

COPC INTAKE AND CANCER RISK ESTIMATES
DAVINCH TECHNOLOGY
(Farmer)

CAS No.	COPC Name	Isoil mg/kg/day	Iproduce mg/kg/day	Idw mg/kg/day	Ibeef mg/kg/day	Imilk mg/kg/day	Ipork mg/kg/day
505-60-2	H	1.44E-18	1.94E-10	1.90E-11	2.85E-10	1.01E-09	6.73E-12
1330-20-7	xylenes	2.56E-17	1.38E-14	4.16E-11	7.87E-14	2.83E-13	3.38E-15
32598-13-3	3,3',4,4'-TCB (PCB 77)	8.01E-21	3.93E-17	8.39E-20	3.12E-15	1.12E-14	1.18E-16
31508-00-6	2,3',4,4',5-PeCB (PCB 118)	3.27E-20	3.06E-16	3.60E-20	1.64E-14	5.89E-14	6.25E-16
32598-14-4	2,3,3',4,4'-PeCB (PCB 105)	6.41E-21	1.14E-17	1.65E-19	1.03E-15	3.69E-15	3.91E-17
7647-01-0	hydrogen chloride	1.14E-12		5.48E-08	2.54E-14	4.80E-14	1.03E-14
7487-94-7	mercuric chloride	1.58E-15	1.17E-12	4.59E-15	1.66E-13	1.21E-12	4.09E-17
7439-97-6	elemental mercury	9.07E-21		1.18E-16			
75-01-4	vinyl chloride	3.58E-22	2.34E-16	3.99E-13	6.12E-18	2.19E-17	2.37E-19
TOTAL		**N/A**	**N/A**	**N/A**	**N/A**	**N/A**	**N/A**

COPC INTAKE AND CANCER RISK ESTIMATES
DAVINCH TECHNOLOGY
(Farmer)

CAS No.	COPC Name	Iegg mg/kg/day	Ichicken mg/kg/day	I_oral mg/kg/day	I_inh mg/kg/day	Cancer soil	Cancer produce	Cancer drinking water
505-60-2	H	5.63E-19	8.68E-19	1.52E-09	1.86E-09	6.07E-18	8.20E-10	8.02E-11
1330-20-7	xylenes	1.00E-17	1.55E-17	4.20E-11	4.65E-09			
32598-13-3	3,3',4,4'-TCB (PCB 77)	1.28E-21	1.97E-21	1.44E-14	2.53E-17			
31508-00-6	2,3',4,4',5-PeCB (PCB 118)	3.40E-21	5.23E-21	7.62E-14	6.40E-17			
32598-14-4	2,3,3',4,4'-PeCB (PCB 105)	1.31E-21	2.02E-21	4.78E-15	2.55E-17			
7647-01-0	hydrogen chloride	2.89E-16	4.46E-16	5.48E-08	3.72E-07			
7487-94-7	mercuric chloride	4.75E-16	4.18E-16	2.55E-12	3.00E-13			
7439-97-6	elemental mercury			1.19E-16	3.28E-13			
75-01-4	vinyl chloride	1.02E-22	1.57E-22	3.99E-13	1.38E-09	1.41E-22	9.23E-17	1.57E-13
TOTAL		**N/A**	**N/A**	**N/A**	**N/A**	**6.07E-18**	**8.20E-10**	**8.03E-11**

COPC INTAKE AND CANCER RISK ESTIMATES
DAVINCH TECHNOLOGY
(Farmer)

CAS No.	COPC Name	Cancer beef	Cancer milk	Cancer pork	Cancer egg	Cancer chicken	Cancer oral	Cancer inhalation
505-60-2	H	1.20E-09	4.28E-09	2.84E-11	2.38E-18	3.66E-18	6.41E-09	2.62E-08
1330-20-7	xylenes							
32598-13-3	3,3',4,4'-TCB (PCB 77)							
31508-00-6	2,3',4,4',5-PeCB (PCB 118)							
32598-14-4	2,3,3',4,4'-PeCB (PCB 105)							
7647-01-0	hydrogen chloride							
7487-94-7	mercuric chloride							
7439-97-6	elemental mercury							
75-01-4	vinyl chloride	2.41E-18	8.64E-18	9.34E-20	4.02E-23	6.20E-23	1.57E-13	2.07E-11
TOTAL		**1.20E-09**	**4.28E-09**	**2.84E-11**	**2.38E-18**	**3.66E-18**	**6.41E-09**	**2.62E-08**

COPC INTAKE AND CANCER RISK ESTIMATES
DAVINCH TECHNOLOGY
(Farmer Child)

CAS No.	COPC Name	Isoil mg/kg/day	Iproduce mg/kg/day	Idw mg/kg/day	Ibeef mg/kg/day	Imilk mg/kg/day	Ipork mg/kg/day
505-60-2	H	8.61E-16	4.68E-10	4.31E-11	1.75E-10	1.68E-09	5.14E-12
1330-20-7	xylenes	1.53E-14	1.81E-12	9.52E-11	1.28E-13	1.32E-12	2.54E-14
32598-13-3	3,3',4,4'-TCB (PCB 77)	1.57E-19	9.47E-17	1.99E-19	1.92E-15	1.85E-14	9.05E-17
31508-00-6	2,3',4,4',5-PeCB (PCB 118)	2.81E-19	7.36E-16	7.96E-20	1.01E-14	9.76E-14	4.77E-16
32598-14-4	2,3,3',4,4'-PeCB (PCB 105)	1.25E-19	2.77E-17	3.94E-19	6.35E-16	6.13E-15	2.99E-17
7647-01-0	hydrogen chloride	6.73E-10		3.22E-06	9.90E-13	5.04E-12	4.97E-13
7487-94-7	mercuric chloride	7.49E-15	2.78E-12	9.74E-15	1.01E-13	2.00E-12	2.81E-17
7439-97-6	elemental mercury	3.47E-18		2.66E-16			
75-01-4	vinyl chloride	2.14E-19	1.90E-15	8.91E-13	4.65E-18	4.61E-17	4.23E-19
TOTAL		**N/A**	**N/A**	**N/A**	**N/A**	**N/A**	**N/A**

COPC INTAKE AND CANCER RISK ESTIMATES
DAVINCH TECHNOLOGY
(Farmer Child)

CAS No.	COPC Name	Iegg mg/kg/day	Ichicken mg/kg/day	I_oral mg/kg/day	I_inh mg/kg/day	Cancer soil	Cancer produce	Cancer drinking water
505-60-2	H	2.60E-17	3.80E-17	2.37E-09	7.80E-10	5.45E-16	2.96E-10	2.73E-11
1330-20-7	xylenes	4.64E-16	6.77E-16	9.85E-11	1.95E-09			
32598-13-3	3,3',4,4'-TCB (PCB 77)	1.94E-21	2.83E-21	2.06E-14	1.06E-17			
31508-00-6	2,3',4,4',5-PeCB (PCB 118)	2.25E-21	3.28E-21	1.09E-13	2.68E-17			
32598-14-4	2,3,3',4,4'-PeCB (PCB 105)	1.98E-21	2.88E-21	6.82E-15	1.07E-17			
7647-01-0	hydrogen chloride	1.32E-14	1.93E-14	3.22E-06	1.56E-07			
7487-94-7	mercuric chloride	1.73E-16	1.44E-16	4.89E-12	1.26E-13			
7439-97-6	elemental mercury			2.70E-16	1.37E-13			
75-01-4	vinyl chloride	4.72E-21	6.88E-21	8.93E-13	5.77E-10	1.27E-20	1.13E-16	5.27E-14
TOTAL		**N/A**	**N/A**	**N/A**	**N/A**	**5.45E-16**	**2.96E-10**	**2.73E-11**

COPC INTAKE AND CANCER RISK ESTIMATES
DAVINCH TECHNOLOGY
(Farmer Child)

CAS No.	COPC Name	Cancer beef	Cancer milk	Cancer pork	Cancer egg	Cancer chicken	Cancer oral	Cancer inhalation
505-60-2	H	1.11E-10	1.07E-09	3.26E-12	1.65E-17	2.40E-17	1.50E-09	3.93E-09
1330-20-7	xylenes							
32598-13-3	3,3',4,4'-TCB (PCB 77)							
31508-00-6	2,3',4,4',5-PeCB (PCB 118)							
32598-14-4	2,3,3',4,4'-PeCB (PCB 105)							
7647-01-0	hydrogen chloride							
7487-94-7	mercuric chloride							
7439-97-6	elemental mercury							
75-01-4	vinyl chloride	2.75E-19	2.73E-18	2.51E-20	2.79E-22	4.07E-22	5.28E-14	3.11E-12
TOTAL		**1.11E-10**	**1.07E-09**	**3.26E-12**	**1.65E-17**	**2.40E-17**	**1.50E-09**	**3.93E-09**

PCBs, PCDDs, and PCDFs INTAKE AND CANCER RISK ESTIMATES AS 2,3,7,8 TCDD TEQ
DAVINCH TECHNOLOGY

CAS No.	COPC Name	Adult Resident				Child Resident				Fisher			
		I_oral_teq	I_inh_teq	cancer_oral	cancer_inh	I_oral_teq	I_inh_teq	cancer_oral	cancer_inh	I_oral_teq	I_inh_teq	cancer_oral	cancer_inh
32598-13-3	3,3',4,4'-TCB (PCB 77)	7.20E-23	1.90E-21	0.00E+00	0.00E+00	1.83E-22	1.06E-21	0.00E+00	0.00E+00	2.26E-21	1.90E-21	0.00E+00	0.00E+00
31508-00-6	2,3',4,4',5-PeCB (PCB 118)	7.53E-23	1.44E-21	0.00E+00	0.00E+00	1.87E-22	8.05E-22	0.00E+00	0.00E+00	6.88E-22	1.44E-21	0.00E+00	0.00E+00
32598-14-4	2,3,3',4,4'-PeCB (PCB 105)	2.87E-23	5.74E-22	0.00E+00	0.00E+00	7.09E-23	3.21E-22	0.00E+00	0.00E+00	1.50E-22	5.74E-22	0.00E+00	0.00E+00
TOTAL		**3.52E-22**	**7.83E-21**	**0.00E+00**	**0.00E+00**	**8.83E-22**	**4.37E-21**	**0.00E+00**	**0.00E+00**	**6.20E-21**	**7.83E-21**	**0.00E+00**	**0.00E+00**

PCBs, PCDDs, and PCDFs INTAKE AND CANCER RISK ESTIMATES AS 2,3,7,8 TCDD TEQ
DAVINCH TECHNOLOGY

CAS No.	COPC Name	Fisher Child				Farmer				Farmer Child			
		I_oral_teq	I_inh_teq	cancer_oral	cancer_inh	I_oral_teq	I_inh_teq	cancer_oral	cancer_inh	I_oral_teq	I_inh_teq	cancer_oral	cancer_inh
32598-13-3	3,3',4,4'-TCB (PCB 77)	1.72E-21	1.06E-21	0.00E+00	0.00E+00	1.44E-18	2.53E-21	0.00E+00	0.00E+00	2.06E-18	1.06E-21	0.00E+00	0.00E+00
31508-00-6	2,3',4,4',5-PeCB (PCB 118)	6.19E-22	8.05E-22	0.00E+00	0.00E+00	2.29E-18	1.92E-21	0.00E+00	0.00E+00	3.27E-18	8.05E-22	0.00E+00	0.00E+00
32598-14-4	2,3,3',4,4'-PeCB (PCB 105)	1.56E-22	3.21E-22	0.00E+00	0.00E+00	1.43E-19	7.66E-22	0.00E+00	0.00E+00	2.05E-19	3.21E-22	0.00E+00	0.00E+00
TOTAL		**5.00E-21**	**4.37E-21**	**0.00E+00**	**0.00E+00**	**7.75E-18**	**1.04E-20**	**0.00E+00**	**0.00E+00**	**1.11E-17**	**4.37E-21**	**0.00E+00**	**0.00E+00**

COPC INTAKE AND NONCANCER HAZARD ESTIMATES
DAVINCH TECHNOLOGY
(Adult Resident)

CAS No.	COPC Name	Isoil mg/kg/day	Iproduce mg/kg/day	Idw mg/kg/day	I_oral mg/kg/day	I_inh mg/kg/day	I_teq mg/kg/day
505-60-2	H	9.23E-17	1.32E-10	1.93E-11	1.52E-10	3.26E-09	
1330-20-7	xylenes	1.64E-15	6.21E-13	4.26E-11	4.32E-11	8.13E-09	
32598-13-3	3,3',4,4'-TCB (PCB 77)	3.33E-20	6.90E-19	9.86E-20	8.22E-19	4.44E-17	4.52E-21
31508-00-6	2,3',4,4',5-PeCB (PCB 118)	5.99E-20	2.50E-18	3.98E-20	2.60E-18	1.12E-16	3.44E-21
32598-14-4	2,3,3',4,4'-PeCB (PCB 105)	2.65E-20	8.80E-19	1.98E-19	1.11E-18	4.47E-17	1.37E-21
7647-01-0	hydrogen chloride	7.30E-11		1.46E-06	1.46E-06	6.51E-07	
7487-94-7	mercuric chloride	1.61E-15	2.43E-14	4.60E-15	3.05E-14	5.25E-13	
7439-97-6	elemental mercury	5.37E-19		1.20E-16	1.20E-16	5.73E-13	
75-01-4	vinyl chloride	2.30E-20	6.44E-16	3.99E-13	3.99E-13	2.41E-09	
TOTAL		**N/A**	**N/A**	**N/A**	**N/A**	**N/A**	**N/A**

COPC INTAKE AND NONCANCER HAZARD ESTIMATES
DAVINCH TECHNOLOGY
(Adult Resident)

CAS No.	COPC Name	HQ_soil	HQ_produce	HQ_dw	HQ_oral	HQ_inhalation
505-60-2	H	1.26E-11	1.81E-05	2.64E-06	2.08E-05	5.45E-04
1330-20-7	xylenes	7.87E-15	2.98E-12	2.04E-10	2.07E-10	2.86E-07
32598-13-3	3,3',4,4'-TCB (PCB 77)	3.20E-15	6.61E-14	9.45E-15	7.88E-14	3.91E-13
31508-00-6	2,3',4,4',5-PeCB (PCB 118)	1.74E-15	7.28E-14	1.16E-15	7.57E-14	3.03E-13
32598-14-4	2,3,3',4,4'-PeCB (PCB 105)	7.71E-16	2.56E-14	5.75E-15	3.21E-14	1.21E-13
7647-01-0	hydrogen chloride					1.14E-04
7487-94-7	mercuric chloride	5.13E-12	7.75E-11	1.47E-11	9.74E-11	6.15E-08
7439-97-6	elemental mercury					6.72E-09
75-01-4	vinyl chloride	7.34E-18	2.06E-13	1.27E-10	1.28E-10	
TOTAL		**1.78E-11**	**1.81E-05**	**2.64E-06**	**2.08E-05**	**6.60E-04**

COPC INTAKE AND NONCANCER HAZARD ESTIMATES
DAVINCH TECHNOLOGY
(Child Resident)

CAS No.	COPC Name	Isoil mg/kg/day	Iproduce mg/kg/day	Idw mg/kg/day	I_oral mg/kg/day	I_inh mg/kg/day	I_teq mg/kg/day
505-60-2	H	8.62E-16	3.19E-10	4.31E-11	3.62E-10	9.10E-09	
1330-20-7	xylenes	1.53E-14	1.51E-12	9.52E-11	9.67E-11	2.27E-08	
32598-13-3	3,3',4,4'-TCB (PCB 77)	3.11E-19	1.66E-18	2.20E-19	2.19E-18	1.24E-16	1.26E-20
31508-00-6	2,3',4,4',5-PeCB (PCB 118)	5.59E-19	6.02E-18	8.90E-20	6.67E-18	3.13E-16	9.59E-21
32598-14-4	2,3,3',4,4'-PeCB (PCB 105)	2.48E-19	2.12E-18	4.42E-19	2.81E-18	1.25E-16	3.83E-21
7647-01-0	hydrogen chloride	6.81E-10		3.26E-06	3.26E-06	1.82E-06	
7487-94-7	mercuric chloride	1.50E-14	5.46E-14	1.03E-14	7.98E-14	1.47E-12	
7439-97-6	elemental mercury	5.01E-18		2.67E-16	2.72E-16	1.60E-12	
75-01-4	vinyl chloride	2.14E-19	1.13E-15	8.91E-13	8.92E-13	6.73E-09	
TOTAL		**N/A**	**N/A**	**N/A**	**N/A**	**N/A**	**N/A**

COPC INTAKE AND NONCANCER HAZARD ESTIMATES
DAVINCH TECHNOLOGY
(Child Resident)

CAS No.	COPC Name	HQ_soil	HQ_produce	HQ_dw	HQ_oral	HQ_inhalation
505-60-2	H	1.18E-10	4.37E-05	5.90E-06	4.96E-05	5.45E-04
1330-20-7	xylenes	7.34E-14	7.26E-12	4.56E-10	4.64E-10	2.86E-07
32598-13-3	3,3',4,4'-TCB (PCB 77)	2.98E-14	1.59E-13	2.11E-14	2.10E-13	3.91E-13
31508-00-6	2,3',4,4',5-PeCB (PCB 118)	1.62E-14	1.75E-13	2.59E-15	1.94E-13	0.00000
32598-14-4	2,3,3',4,4'-PeCB (PCB 105)	7.19E-15	6.17E-14	1.28E-14	8.17E-14	1.21E-13
7647-01-0	hydrogen chloride					1.14E-04
7487-94-7	mercuric chloride	4.79E-11	1.74E-10	3.28E-11	2.55E-10	6.15E-08
7439-97-6	elemental mercury					6.72E-09
75-01-4	vinyl chloride	6.85E-17	3.61E-13	2.85E-10	2.85E-10	8.47E-08
TOTAL		**1.66E-10**	**4.37E-05**	**5.90E-06**	**4.96E-05**	**6.60E-04**

COPC INTAKE AND NONCANCER HAZARD ESTIMATES
DAVINCH TECHNOLOGY
(Fisher)

CAS No.	COPC Name	Isoil mg/kg/day	Iproduce mg/kg/day	Idw mg/kg/day	Ifish mg/kg/day	I_oral mg/kg/day	I_inh mg/kg/day	I_teq mg/kg/day
505-60-2	H	9.23E-17	1.32E-10	1.93E-11	2.36E-13	1.52E-10	3.26E-09	
1330-20-7	xylenes	1.64E-15	6.21E-13	4.26E-11	6.96E-12	5.02E-11	8.13E-09	
32598-13-3	3,3',4,4'-TCB (PCB 77)	3.33E-20	6.90E-19	9.86E-20	2.36E-17	2.44E-17	4.44E-17	6.88E-21
31508-00-6	2,3',4,4',5-PeCB (PCB 118)	5.99E-20	2.50E-18	3.98E-20	2.49E-17	2.75E-17	1.12E-16	4.19E-21
32598-14-4	2,3,3',4,4'-PeCB (PCB 105)	2.65E-20	8.80E-19	1.98E-19	4.81E-18	5.91E-18	4.47E-17	1.52E-21
7647-01-0	hydrogen chloride	7.30E-11		1.46E-06	1.71E-08	1.48E-06	6.51E-07	
7487-94-7	mercuric chloride	1.61E-15	2.43E-14	4.60E-15		3.05E-14	5.25E-13	
7439-97-6	elemental mercury	5.37E-19		1.20E-16		1.20E-16	5.73E-13	
75-01-4	vinyl chloride	2.30E-20	6.44E-16	3.99E-13	2.94E-15	4.02E-13	2.41E-09	
TOTAL		**N/A**	**N/A**	**N/A**	**N/A**	**N/A**	**N/A**	**N/A**

COPC INTAKE AND NONCANCER HAZARD ESTIMATES
DAVINCH TECHNOLOGY
(Fisher)

CAS No.	COPC Name	HQ_soil	HQ_produce	HQ_dw	HQ_fish	HQ_oral	HQ_inhalation
505-60-2	H	1.26E-11	1.81E-05	2.64E-06	3.23E-08	2.08E-05	5.45E-04
1330-20-7	xylenes	7.87E-15	2.98E-12	2.04E-10	3.34E-11	2.41E-10	2.86E-07
32598-13-3	3,3',4,4'-TCB (PCB 77)	3.20E-15	6.61E-14	9.45E-15	2.26E-12	2.34E-12	3.91E-13
31508-00-6	2,3',4,4',5-PeCB (PCB 118)	1.74E-15	7.28E-14	1.16E-15	7.23E-13	7.99E-13	3.03E-13
32598-14-4	2,3,3',4,4'-PeCB (PCB 105)	7.71E-16	2.56E-14	5.75E-15	1.40E-13	1.72E-13	1.21E-13
7647-01-0	hydrogen chloride						1.14E-04
7487-94-7	mercuric chloride	5.13E-12	7.75E-11	1.47E-11		9.74E-11	6.15E-08
7439-97-6	elemental mercury						6.72E-09
75-01-4	vinyl chloride	7.34E-18	2.06E-13	1.27E-10	9.40E-13	1.29E-10	8.47E-08
TOTAL		**1.78E-11**	**1.81E-05**	**2.64E-06**	**3.24E-08**	**2.08E-05**	**6.60E-04**

COPC INTAKE AND NONCANCER HAZARD ESTIMATES
DAVINCH TECHNOLOGY
(Fisher Child)

CAS No.	COPC Name	Isoil mg/kg/day	Iproduce mg/kg/day	Idw mg/kg/day	Ifish mg/kg/day	I_oral mg/kg/day	I_inh mg/kg/day	I_teq mg/kg/day
505-60-2	H	8.62E-16	3.19E-10	4.31E-11	1.66E-13	3.62E-10	9.10E-09	
1330-20-7	xylenes	1.53E-14	1.51E-12	9.52E-11	4.90E-12	1.02E-10	2.27E-08	
32598-13-3	3,3',4,4'-TCB (PCB 77)	3.11E-19	1.66E-18	2.20E-19	1.66E-17	1.88E-17	1.24E-16	1.43E-20
31508-00-6	2,3',4,4',5-PeCB (PCB 118'	5.59E-19	6.02E-18	8.90E-20	1.75E-17	2.42E-17	3.13E-16	1.01E-20
32598-14-4	2,3,3',4,4'-PeCB (PCB 105	2.48E-19	2.12E-18	4.42E-19	3.38E-18	6.20E-18	1.25E-16	3.93E-21
7647-01-0	hydrogen chloride	6.81E-10		3.26E-06	1.21E-08	3.27E-06	1.82E-06	
7487-94-7	mercuric chloride	1.50E-14	5.46E-14	1.03E-14		7.98E-14	1.47E-12	
7439-97-6	elemental mercury	5.01E-18		2.67E-16		2.72E-16	1.60E-12	
75-01-4	vinyl chloride	2.14E-19	1.13E-15	8.91E-13	2.07E-15	8.94E-13	6.73E-09	
TOTAL		**N/A**	**N/A**	**N/A**	**N/A**	**N/A**	**N/A**	**N/A**

COPC INTAKE AND NONCANCER HAZARD ESTIMATES
DAVINCH TECHNOLOGY
(Fisher Child)

CAS No.	COPC Name	HQ_soil	HQ_produce	HQ_dw	HQ_fish	HQ_oral	HQ_inhalation
505-60-2	H	1.18E-10	4.37E-05	5.90E-06	2.28E-08	4.96E-05	5.45E-04
1330-20-7	xylenes	7.34E-14	7.26E-12	4.56E-10	2.35E-11	4.87E-10	2.86E-07
32598-13-3	3,3',4,4'-TCB (PCB 77)	2.98E-14	1.59E-13	2.11E-14	1.59E-12	1.80E-12	3.91E-13
31508-00-6	2,3',4,4',5-PeCB (PCB 118'	1.62E-14	1.75E-13	2.59E-15	5.09E-13	7.03E-13	3.03E-13
32598-14-4	2,3,3',4,4'-PeCB (PCB 105	7.19E-15	6.17E-14	1.28E-14	9.83E-14	1.80E-13	1.21E-13
7647-01-0	hydrogen chloride						1.14E-04
7487-94-7	mercuric chloride	4.79E-11	1.74E-10	3.28E-11		2.55E-10	6.15E-08
7439-97-6	elemental mercury						6.72E-09
75-01-4	vinyl chloride	6.85E-17	3.61E-13	2.85E-10	6.62E-13	2.86E-10	8.47E-08
TOTAL		**1.66E-10**	**4.37E-05**	**5.90E-06**	**2.28E-08**	**4.96E-05**	**6.60E-04**

COPC INTAKE AND NONCANCER HAZARD ESTIMATES
DAVINCH TECHNOLOGY
(Farmer)

CAS No.	COPC Name	Isoil mg/kg/day	Iproduce mg/kg/day	Idw mg/kg/day	Ibeef mg/kg/day	Imilk mg/kg/day	Ipork mg/kg/day	Iegg mg/kg/day
505-60-2	H	9.23E-17	1.95E-10	1.93E-11	2.85E-10	1.01E-09	6.74E-12	3.61E-17
1330-20-7	xylenes	1.64E-15	7.44E-13	4.26E-11	2.09E-13	7.93E-13	3.33E-14	6.45E-16
32598-13-3	3,3',4,4'-TCB (PCB 77)	3.33E-20	3.95E-17	9.86E-20	3.12E-15	1.12E-14	1.19E-16	5.33E-21
31508-00-6	2,3',4,4',5-PeCB (PCB 118)	5.99E-20	3.06E-16	3.98E-20	1.64E-14	5.89E-14	6.25E-16	6.23E-21
32598-14-4	2,3,3',4,4'-PeCB (PCB 105)	2.65E-20	1.17E-17	1.98E-19	1.03E-15	3.69E-15	3.93E-17	5.43E-21
7647-01-0	hydrogen chloride	7.30E-11		1.46E-06	1.63E-12	3.08E-12	6.59E-13	1.86E-14
7487-94-7	mercuric chloride	1.61E-15	1.17E-12	4.60E-15	1.66E-13	1.21E-12	4.10E-17	4.81E-16
7439-97-6	elemental mercury	5.37E-19		1.20E-16				
75-01-4	vinyl chloride	2.30E-20	1.00E-15	3.99E-13	7.57E-18	2.78E-17	5.54E-19	6.55E-21
TOTAL		**N/A**	**N/A**	**N/A**	**N/A**	**N/A**	**N/A**	**N/A**

COPC INTAKE AND NONCANCER HAZARD ESTIMATES
DAVINCH TECHNOLOGY
(Farmer)

CAS No.	COPC Name	Ichicken mg/kg/day	I_oral mg/kg/day	I_inh mg/kg/day	I_teq mg/kg/day	HQ_soil	HQ_produce	HQ_dw
505-60-2	H	5.57E-17	1.52E-09	3.26E-09		1.26E-11	2.67E-05	2.64E-06
1330-20-7	xylenes	9.93E-16	4.44E-11	8.13E-09		7.87E-15	3.57E-12	2.04E-10
32598-13-3	3,3',4,4'-TCB (PCB 77)	8.21E-21	1.44E-14	4.44E-17	1.45E-18	3.20E-15	3.79E-12	9.45E-15
31508-00-6	2,3',4,4',5-PeCB (PCB 118)	9.59E-21	7.62E-14	1.12E-16	2.29E-18	1.74E-15	8.89E-12	1.16E-15
32598-14-4	2,3,3',4,4'-PeCB (PCB 105)	8.36E-21	4.78E-15	4.47E-17	1.45E-19	7.71E-16	3.39E-13	5.75E-15
7647-01-0	hydrogen chloride	2.86E-14	1.46E-06	6.51E-07				
7487-94-7	mercuric chloride	4.23E-16	2.55E-12	5.25E-13		5.13E-12	3.74E-09	1.47E-11
7439-97-6	elemental mercury		1.20E-16	5.73E-13				
75-01-4	vinyl chloride	1.01E-20	4.00E-13	2.41E-09		7.34E-18	3.20E-13	1.27E-10
TOTAL		**N/A**	**N/A**	**N/A**	**N/A**	**1.78E-11**	**2.67E-05**	**2.64E-06**

COPC INTAKE AND NONCANCER HAZARD ESTIMATES
DAVINCH TECHNOLOGY
(Farmer)

CAS No.	COPC Name	HQ_beef	HQ_milk	HQ_pork	HQ_egg	HQ_chicken	HQ_oral	HQ_inhalation
505-60-2	H	3.90E-05	1.39E-04	9.23E-07	4.95E-12	7.64E-12	2.08E-04	5.45E-04
1330-20-7	xylenes	1.00E-12	3.80E-12	1.60E-13	3.09E-15	4.76E-15	2.13E-10	2.86E-07
32598-13-3	3,3',4,4'-TCB (PCB 77)	2.99E-10	1.07E-09	1.14E-11	5.11E-16	7.87E-16	1.38E-09	3.91E-13
31508-00-6	2,3',4,4',5-PeCB (PCB 118)	4.78E-10	1.71E-09	1.82E-11	1.81E-16	2.79E-16	2.22E-09	3.03E-13
32598-14-4	2,3,3',4,4'-PeCB (PCB 105)	3.00E-11	1.07E-10	1.14E-12	1.58E-16	2.43E-16	1.39E-10	1.21E-13
7647-01-0	hydrogen chloride							1.14E-04
7487-94-7	mercuric chloride	5.31E-10	3.87E-09	1.31E-13	1.54E-12	1.35E-12	8.16E-09	6.15E-08
7439-97-6	elemental mercury							6.72E-09
75-01-4	vinyl chloride	2.42E-15	8.88E-15	1.77E-16	2.09E-18	3.22E-18	1.28E-10	8.47E-08
TOTAL		**3.90E-05**	**1.39E-04**	**9.23E-07**	**6.49E-12**	**8.99E-12**	**2.08E-04**	**6.60E-04**

COPC INTAKE AND NONCANCER HAZARD ESTIMATES
DAVINCH TECHNOLOGY
(Farmer Child)

CAS No.	COPC Name	Isoil mg/kg/day	Iproduce mg/kg/day	Idw mg/kg/day	Ibeef mg/kg/day	Imilk mg/kg/day	Ipork mg/kg/day	Iegg mg/kg/day
505-60-2	H	8.62E-16	4.68E-10	4.31E-11	1.75E-10	1.68E-09	5.14E-12	2.60E-17
1330-20-7	xylenes	1.53E-14	1.81E-12	9.52E-11	1.28E-13	1.32E-12	2.55E-14	4.64E-16
32598-13-3	3,3',4,4'-TCB (PCB 77)	3.11E-19	9.49E-17	2.20E-19	1.92E-15	1.85E-14	9.06E-17	3.84E-21
31508-00-6	2,3',4,4',5-PeCB (PCB 118)	5.59E-19	7.36E-16	8.90E-20	1.01E-14	9.77E-14	4.77E-16	4.48E-21
32598-14-4	2,3,3',4,4'-PeCB (PCB 105)	2.48E-19	2.80E-17	4.42E-19	6.35E-16	6.13E-15	3.00E-17	3.91E-21
7647-01-0	hydrogen chloride	6.81E-10		3.26E-06	1.00E-12	5.11E-12	5.03E-13	1.34E-14
7487-94-7	mercuric chloride	1.50E-14	2.81E-12	1.03E-14	1.02E-13	2.01E-12	3.13E-17	3.46E-16
7439-97-6	elemental mercury	5.01E-18		2.67E-16				
75-01-4	vinyl chloride	2.14E-19	1.90E-15	8.91E-13	4.65E-18	4.61E-17	4.23E-19	4.72E-21
TOTAL		**N/A**	**N/A**	**N/A**	**N/A**	**N/A**	**N/A**	**N/A**

COPC INTAKE AND NONCANCER HAZARD ESTIMATES
DAVINCH TECHNOLOGY
(Farmer Child)

CAS No.	COPC Name	Ichicken mg/kg/day	I_oral mg/kg/day	I_inh mg/kg/day	I_teq mg/kg/day	HQ_soil	HQ_produce	HQ_dw
505-60-2	H	3.80E-17	2.37E-09	9.10E-09		1.18E-10	6.41E-05	5.90E-06
1330-20-7	xylenes	6.77E-16	9.85E-11	2.27E-08		7.34E-14	8.66E-12	4.56E-10
32598-13-3	3,3',4,4'-TCB (PCB 77)	5.59E-21	2.06E-14	1.24E-16	2.07E-18	2.98E-14	9.10E-12	2.11E-14
31508-00-6	2,3',4,4',5-PeCB (PCB 118)	6.54E-21	1.09E-13	3.13E-16	3.28E-18	1.62E-14	2.14E-11	2.59E-15
32598-14-4	2,3,3',4,4'-PeCB (PCB 105)	5.70E-21	6.82E-15	1.25E-16	2.08E-19	7.19E-15	8.15E-13	1.28E-14
7647-01-0	hydrogen chloride	1.95E-14	3.26E-06	1.82E-06				
7487-94-7	mercuric chloride	2.89E-16	4.94E-12	1.47E-12		4.79E-11	8.97E-09	3.28E-11
7439-97-6	elemental mercury		2.72E-16	1.60E-12				
75-01-4	vinyl chloride	6.88E-21	8.93E-13	6.73E-09		6.85E-17	6.08E-13	2.85E-10
TOTAL		**N/A**	**N/A**	**N/A**	**N/A**	**1.66E-10**	**6.41E-05**	**5.90E-06**

COPC INTAKE AND NONCANCER HAZARD ESTIMATES
DAVINCH TECHNOLOGY
(Farmer Child)

CAS No.	COPC Name	HQ_beef	HQ_milk	HQ_pork	HQ_egg	HQ_chicken	HQ_oral	HQ_inhalation
505-60-2	H	2.40E-05	2.31E-04	7.05E-07	3.57E-12	5.21E-12	3.25E-04	5.45E-04
1330-20-7	xylenes	6.15E-13	6.31E-12	1.22E-13	2.23E-15	3.25E-15	4.72E-10	2.86E-07
32598-13-3	3,3',4,4'-TCB (PCB 77)	1.84E-10	1.78E-09	8.69E-12	3.68E-16	5.36E-16	1.98E-09	3.91E-13
31508-00-6	2,3',4,4',5-PeCB (PCB 118)	2.94E-10	2.84E-09	1.39E-11	1.30E-16	1.90E-16	3.17E-09	3.03E-13
32598-14-4	2,3,3',4,4'-PeCB (PCB 105)	1.84E-11	1.78E-10	8.72E-13	1.14E-16	1.66E-16	1.98E-10	1.21E-13
7647-01-0	hydrogen chloride							1.14E-04
7487-94-7	mercuric chloride	3.26E-10	6.42E-09	1.00E-13	1.11E-12	9.23E-13	1.58E-08	6.15E-08
7439-97-6	elemental mercury							6.72E-09
75-01-4	vinyl chloride	1.49E-15	1.47E-14	1.35E-16	1.51E-18	2.20E-18	2.85E-10	8.47E-08
TOTAL		**2.40E-05**	**2.31E-04**	**7.05E-07**	**4.68E-12**	**6.13E-12**	**3.25E-04**	**6.60E-04**

NONCANCER HAZARD ESTIMATES
FOR ACUTE INHALATION EXPOSURE
DAVINCH TECHNOLOGY

CAS No.	COPC Name	Cacute µg/m^3	AHQ_inh
505-60-2	H	2.12E-03	3.27E-05
1330-20-7	xylenes	5.58E-03	2.54E-07
32598-13-3	3,3',4,4'-TCB (PCB 77)	2.89E-11	2.32E-13
31508-00-6	2,3',4,4',5-PeCB (PCB 118)	7.32E-11	5.86E-13
32598-14-4	2,3,3',4,4'-PeCB (PCB 105)	2.92E-11	2.34E-13
7647-01-0	hydrogen chloride	4.47E-01	2.13E-04
7487-94-7	mercuric chloride	3.47E-07	8.67E-11
7439-97-6	elemental mercury	3.77E-07	6.29E-07
75-01-4	vinyl chloride	1.59E-03	8.81E-09
TOTAL		**N/A**	**2.46E-04**

PCBs, PCDDs, and PCDFs EXPOSURE ESTIMATES AS 2,3,7,8 TCDD TEQ
DAVINCH TECHNOLOGY

Exposure Scenario	**Location**	**I_teq** mg TEQ/kg/day	**I_teq** pg TEQ/kg/day	**Cbmilk** pg TEQ/kg	**I_bmilk** pg TEQ/kg/day
Adult Resident	Rmax	9.33E-21	9.33E-12	1.03E-07	2.72E-10
Child Resident	Rmax	2.60E-20	2.60E-11		
Fisher	Rmax	1.26E-20	1.26E-11	1.39E-07	3.67E-10
Fisher Child	Rmax	2.83E-20	2.83E-11		
Farmer	Fmax	3.88E-18	3.88E-09	4.30E-05	1.13E-07
Farmer Child	Fmax	5.56E-18	5.56E-09		

SUMMARY OF ESTIMATED
CANCER RISKS AND NONCANCER HAZARDS
DAVINCH TECHNOLOGY

Exposure Scenario	Scenario Location	Cancer Risk (Benchmark = 1E-05)			Total Hazard Index (Benchmark = 0.25)		
		Oral	Inhalation	Total	Oral	Inhalation	Total
Adult Resident	Rmax	4.80E-10	1.96E-08	2.01E-08	0.000021	0.000660	0.000681
Child Resident	Rmax	2.29E-10	3.93E-09	4.16E-09	0.000050	0.000660	0.000710
Fisher	Rmax	4.81E-10	1.96E-08	2.01E-08	0.000021	0.000660	0.000681
Fisher Child	Rmax	2.29E-10	3.93E-09	4.16E-09	0.000050	0.000660	0.000710
Farmer	Fmax	6.41E-09	2.62E-08	3.26E-08	0.000208	0.000660	0.000868
Farmer Child	Fmax	1.50E-09	3.93E-09	5.43E-09	0.000325	0.000660	0.000985
Acute Exposure	Amax	--	--	--	--	0.000246	--

SUMMARY OF ESTIMATED MAXIMUM
CANCER RISKS AND NONCANCER HAZARDS FOR INDIVIDUAL COPCS AND EXPOSURE PATHWAYS
DAVINCH TECHNOLOGY

Exposure Scenario	Exposure Pathway	Carcinogenic Risk		Non Carcinogenic Hazard	
		Max Cancer Risk	From COPC	Max HQ	From COPC
Adult Resident	inhalation	1.96E-08	H	5.45E-04	H
	oral	4.80E-10	H	2.08E-05	H
	soil	2.92E-16	H	1.26E-11	H
	produce	4.19E-10	H	1.81E-05	H
Child Resident	inhalation	3.93E-09	H	5.45E-04	H
	oral	2.29E-10	H	4.96E-05	H
	soil	5.45E-16	H	1.18E-10	H
	produce	2.02E-10	H	4.37E-05	H
Fisher	inhalation	1.96E-08	H	0.00055	H
	oral	4.81E-10	H	2.08E-05	H
	soil	2.92E-16	H	1.26E-11	H
	produce	4.19E-10	H	1.81E-05	H
	fish	7.47E-13	H	3.23E-08	H
Fisher Child	inhalation	3.93E-09	H	5.45E-04	H
	oral	2.29E-10	H	4.96E-05	H
	soil	5.45E-16	H	1.18E-10	H
	produce	2.02E-10	H	4.37E-05	H
	fish	1.05E-13	H	2.28E-08	H

SUMMARY OF ESTIMATED MAXIMUM
CANCER RISKS AND NONCANCER HAZARDS FOR INDIVIDUAL COPCS AND EXPOSURE PATHWAYS
DAVINCH TECHNOLOGY

Exposure Scenario	Exposure Pathway	Carcinogenic Risk		Non Carcinogenic Hazard	
		Max Cancer Risk	From COPC	Max HQ	From COPC
Farmer	inhalation	2.62E-08	H	5.45E-04	H
	oral	6.41E-09	H	2.08E-04	H
	soil	6.07E-18	H	1.26E-11	H
	produce	8.20E-10	H	2.67E-05	H
	beef	1.20E-09	H	3.90E-05	H
	milk	4.28E-09	H	1.39E-04	H
	pork	2.84E-11	H	9.23E-07	H
	egg	2.38E-18	H	4.95E-12	H
	chicken	3.66E-18	H	7.64E-12	H
Farmer Child	inhalation	3.93E-09	H	5.45E-04	H
	oral	1.50E-09	H	3.25E-04	H
	soil	5.45E-16	H	1.18E-10	H
	produce	2.96E-10	H	6.41E-05	H
	beef	1.11E-10	H	2.40E-05	H
	milk	1.07E-09	H	2.31E-04	H
	pork	3.26E-12	H	7.05E-07	H
	egg	1.65E-17	H	3.57E-12	H
	chicken	2.40E-17	H	5.21E-12	H
Acute Exposure	inh	NA	NA	2.13E-04	hydrogen chloride

"This document has been reviewed by RWR and no OPSEC-sensitive information was found.

APPENDIX 4

SDC TECHNOLOGY

RISK ASSESSMENT CALCULATIONS

This document has been reviewed for ITAR/EAR and no ITAR/EAR sensitive information was found.

TABLE OF CONTENTS

Risk Model Parameters ……..……1
Site-Specific and Default Constants ……...……6
Exposures Scenario Specific Data ……..7
Animal Exposure Data ……8
Waterbody and Watershed Specific Data ……...…9
Air Modeling Results ……....10
Emission Rates and Inputs from Vapor Air Modeling ……11
COPC Toxicity Data ……13
Calculations for Estimating Fish and Sediment Concentrations – Lake Vega ……16
Calculations for Estimating Fish and Sediment Concentrations – Lake Vega (For Non cancer Hazards) ……18
Calculations for Estimating Fish and Sediment Concentrations – Lake Vega (For Cancer Risks) ……19
Calculations for Estimating Drinking Water and Sediment Concentrations – Kentucky River ...20
Calculations for Estimating Drinking Water and Sediment Concentrations – Kentucky River (For Non Cancer Hazards) …….....21
Calculations for Estimating Drinking Water and Sediment Concentrations – Kentucky River (For Cancer Risks) ……...22
Calculations for Estimating Drinking Water and Sediment Concentrations – Kentucky River (For Cancer Risks – Exposure Duration > 30 Years) ……...23
Calculations for Land Based Media Concentrations "RMAX" ……...…24
Calculations for Land Based Media Concentrations "RMAX" ("RMAX" for Non Cancer Hazards) ……....25
Calculations for Land Based Media Concentrations "RMAX" ("RMAX" for Cancer Risks) ….26
Calculations for Land Based Media Concentrations ("FMAX") ……27
Calculations for Land Based Media Concentrations ("FMAX" for Non Cancer Hazards) …….28
Calculations for Land Based Media Concentrations ("FMAX" for Child Cancer Risks) ……...30
Calculations for Land Based Media Concentrations ("FMAX" for Adult Cancer Risks) ……...32
COPC Intake and Cancer Risk Estimates (Adult Resident) ……..…34
COPC Intake and Cancer Risk Estimates (Child Resident) ……....35
COPC Intake and Cancer Risk Estimates (Fisher) ……...…37
COPC Intake and Cancer Risk Estimates (Child Fisher) ……..…….39
COPC Intake and Cancer Risk Estimates (Farmer) ……..…….41
COPC Intake and Cancer Risk Estimates (Farmer Child) ……..……...44

TABLE OF CONTENTS (continued)

PCBs, PCDDs, AND PCDFs Intake and cancer Risk Estimates As 2, 3, 7, 8 TCDD TEQ ...……48
COPC Intake and Non Cancer Hazards Estimates (Adult Resident) ……....51
COPC Intake and Non Cancer Hazards Estimates (Child Resident) ……53
COPC Intake and Non Cancer Hazards Estimates (Fisher) ……..55
COPC Intake and Non Cancer Hazards Estimates (Fisher Child) ……....57
COPC Intake and Non Cancer Hazards Estimates (Farmer) ……....59
COPC Intake and Non Cancer Hazards Estimates (Farmer Child) ……..…62
Non Cancer Hazard Estimates for Acute Inhalation Exposure …….65
PCBs, PCDDs, AND PCDFs EXPOSURE ESTIMATES As 2, 3, 7, 8 TCDD TEQ ……66
Summary of Estimated Cancer Risks and Non Cancer Hazards ……..…67
Summary of Estimated Maximum Cancer Risks and Non Cancer Hazards for Individuals COPCs and Exposure Pathways ……...68

RISK MODEL PARAMETERS
SDC TECHNOLOGY

Parameter	Units	Description	Category
BD	g soil/cm^3 soil	Soil bulk density	Constants
Bs	--	Soil bioavailability factor	Constants
Cd	--	Drag coefficient	Constants
Ev	cm/yr	Average annual evapotranspiration	Constants
I	cm/yr	Average annual irrigation	Constants
k	--	von Karman's constant	Constants
kp	1/yr	Plant surface loss coefficient	Constants
mu_a	g/cm/s	Viscosity of air	Constants
P	cm/yr	Average annual precipitation	Constants
R	atm-m^3/mol-K	Universal gas constant	Constants
rho_a	g/cm^3	Density of air	Constants
rho_soil	g/cm^3	Density of soil	Constants
rho_w	g/cm^3	Density of water	Constants
RO	cm/yr	Average annual surface runoff from pervious areas	Constants
T1	year	Time period at the beginning of combustion	Constants
Ta	K	Ambient air temperature	Constants
tD	year	Time period over which deposition occurs	Constants
theta_sw	mL/cm^3	Soil volumetric water content	Constants
Zs	cm	Soil mixing zone depth	Constants
Rp_ag	--	Interception fraction of the edible portion of above ground produce	Constants
Tp_ag	yr	Length of plant exposure to deposition per harvest of the edible portion of the ith plant group	Constants
Yp_ag	kg DW/m^2	Yield or standing crop biomass of the edible portion of the plant (productivity)	Constants
h_teq	days	Half-life of dioxin TEQ in adults	Constants
f1	--	Fraction of ingested dioxin that is stored in fat	Constants
f2	--	Fraction of mother's weight that is fat	Constants
f3	--	Fraction of mother's breast milk that is fat	Constants
f4	--	Fraction of ingested COPC that is absorbed	Constants
BW	kg	Body weight	Exposure Basis
BW_infant	kg	Body weight for infant	Exposure Basis
IR	m^3/hr	Inhalation rate	Exposure Basis
Crsoil	kg soil/day	Consumption rate of soil	Exposure Basis
Crag	kg DW plant/kg BW-day	Consumption rate of exposed aboveground produce	Exposure Basis
CRpp	kg DW plant/kg BW-day	Consumption rate of protected aboveground produce	Exposure Basis
CRbg	kg DW plant/kg BW-day	Consumption rate of belowground produce	Exposure Basis
CRdw	L water/day	Consumption rate of drinking water	Exposure Basis
Crfish	kg/kg-day	Consumption rate of fish	Exposure Basis
CRbmilk	kg/day	Ingestion rate of breast milk by the infant	Exposure Basis

RISK MODEL PARAMETERS
SDC TECHNOLOGY

Parameter	Units	Description	Category
Fsoil	--	Fraction of soil that is contaminated	Exposure Basis
Fproduce	--	Fraction of ingested produce that is contaminated (aka Fag)	Exposure Basis
Fdw	--	Fraction of drinking water that is contaminated	Exposure Basis
Ffish	--	Fraction of fish that is contaminated	Exposure Basis
ET	hours/day	Exposure time	Exposure Basis
EF	days/yr	Exposure frequency	Exposure Basis
ED	year	Exposure duration	Exposure Basis
AT_noncancer	year	Averaging time for estimating noncancer hazard	Exposure Basis
AT_cancer	year	Averaging time for estimating cancer risk	Exposure Basis
AT_nursing	year	Averaging time for estimating average daily dose for a nursing infant	Exposure Basis
eff		Exposure frequency factor (EF divided by 365 days/yr)	Exposure Basis
edf_nc	--	Exposure duration factor for noncancer hazard (ED/AT_noncancer)	Exposure Basis
edf_c	--	Exposure duration factor for cancer risk (ED/AT_cancer)	Exposure Basis
edf_nursing	--	Exposure duration factor for nursing infants	Exposure Basis
b	--	Empirical slope coefficient	Waterbody Input
AI	m^2	Impervious watershed area receiving COPC deposition	Waterbody Input
AL	m^2	Total watershed area receiving deposition	Waterbody Input
Aw	m^2	Waterbody Surface Area	Waterbody Input
C_usle	--	USLE cover management factor	Waterbody Input
CBS	g/cm^3	Bed sediment concentration	Waterbody Input
dbs	m	Depth of upper benthic sediment layer	Waterbody Input
dwc	m	Depth of water column	Waterbody Input
dz	m	Total water body depth	Waterbody Input
flipid	--	Fish lipid content	Waterbody Input
kb	1/yr	Benthic burial rate constant	Waterbody Input
K_usle	ton/acre	USLE erodibility factor	Waterbody Input
lambda_z	--	Dimensionless viscous sublayer thickness	Waterbody Input
LS_usle	--	USLE length-slope factor	Waterbody Input
mu_w	g/cm-s	Viscosity of water corresponding to water temperature	Waterbody Input
OCsed	--	Fraction of organic carbon in bottom sediment	Waterbody Input
PF_usle	--	USLE supporting practice factor	Waterbody Input
RF_usle	1/yr	USLE rainfall (or erosivity factor)	Waterbody Input
SD	--	Sediment delivery ratio (watershed)	Waterbody Input
theta	--	Temperature correction factor	Waterbody Input
theta_bs	--	Bed sediment concentration	Waterbody Input
TSS	mg/L	Total suspended solids concentration	Waterbody Input
Twk	K	Water body temperature	Waterbody Input
u	m/s	Current velocity	Waterbody Input
Vfx	m^3/yr	Average volumetric flow rate through water body	Waterbody Input

RISK MODEL PARAMETERS
SDC TECHNOLOGY

Parameter	Units	Description	Category
W	m/s	Average annual wind speed	Waterbody Input
Xe	kg/m^2-yr	Unit Soil loss	Waterbody Input
Cyv	µg-s/g-m^3	Unitized vapor phase air concentration (yearly average)	Air Model
Cyp	µg-s/g-m^3	Unitized particle phase air concentration (yearly average)	Air Model
Cypb	µg-s/g-m^3	Unitized particle-bound phase air concentration (yearly average)	Air Model
Dytv(Vdv)	s/m^2-yr	Unitized vapor phase total deposition (yearly average) as a function of the dry vapor deposition velocity	Air Model
Dytp	s/m^2-yr	Unitized particle phase total deposition (yearly average)	Air Model
Dytpb	s/m^2-yr	Unitized particle-bound phase total deposition (yearly average)	Air Model
Dydp	s/m^2-yr	Unitized particle phase dry deposition (yearly average)	Air Model
Dydpb	s/m^2-yr	Unitized particle-bound phase dry deposition (yearly average)	Air Model
Dywp	s/m^2-yr	Unitized particle phase wet deposition (yearly average)	Air Model
Dywpb	s/m^2-yr	Unitized particle-bound phase wet deposition (yearly average)	Air Model
Chv	µg-s/g-m^3	Unitized vapor phase air concentration (hourly maximum)	Air Model
Chp	µg-s/g-m^3	Unitized particle phase air concentration (hourly maximum)	Air Model
Chpb	µg-s/g-m^3	Unitized particle-bound phase air concentration (hourly maximum)	Air Model
Q	g/s	COPC emission rate impacting risk assessment area (chronic)	COPC Data
Qa	g/s	COPC emission rate impacting risk assessment area (acute)	COPC Data
kse	1/yr	COPC loss constant due to soil erosion	COPC Data
ksr	1/yr	COPC loss constant due to runoff	COPC Data
ksl	1/yr	COPC loss constant due to leaching	COPC Data
ksv	1/yr	COPC loss constant due to volatilization	COPC Data
ks	1/yr	COPC soil loss constant due to all processes	COPC Data
RfDo	mg/kg/day	Oral reference dose	COPC Data
RfC	mg/m^3	Reference concentration	COPC Data
CSFo	1/(mg/kg/day)	Oral cancer slope factor	COPC Data
URFi	1/(µg/m^3)	Inhalation unit risk factor	COPC Data
AIEC	mg/m^3	Acute inhalation exposure criterion	COPC Data
BAF	L/kg FW	Bioaccumulation factor for COPC in fish	COPC Data
BCFfish	L/kg FW	Bioconcentration factor for COPC in fish	COPC Data
BSAFfish	(mg/kg)/(mg/kg)	Biota-sediment accumulation factor	COPC Data
Brag	--	Plant-soil bioconcentration factor for given plant-type	COPC Data
Brroot	--	Plant-soil bioconcentration factor for given plant-type	COPC Data
Bvag	(mg/kg)/(mg/kg)	COPC air-to-plant biotransfer factor for given plant-type	COPC Data
Babeef	day/kg	Biotransfer factor-beef	COPC Data
Baeggs	day/kg	Biotransfer factor-eggs	COPC Data
Bamilk	day/kg	Biotransfer factor-milk	COPC Data
Bapork	day/kg	Biotransfer factor-pork	COPC Data
Bapoult	day/kg	Biotransfer factor-poultry	COPC Data

RISK MODEL PARAMETERS
SDC TECHNOLOGY

Parameter	Units	Description	Category
BCFegg	(mg/kg)/(mg/kg)	Biococentration factor-eggs	COPC Data
BCFpoult	(mg/kg)/(mg/kg)	Biococentration factor-poultry	COPC Data
Brf/s	unitless	Plant-soil bioconcentration factor for forage/silage	COPC Data
Bvforage	(mg/kg)/mg/kg)	COPC air-to-plant biotransfer factor-forage	COPC Data
Brgrain	unitless	Plant-soil biocontration factor for grain	COPC Data
Da	cm^2/s	Diffusivity of COPC in air	COPC Data
Dw	cm^2/s	Diffusivity of COPC in water	COPC Data
Fv	--	Fraction of COPC in vapor phase	COPC Data
H	atm·m^3/mol	Henry's Law constant	COPC Data
Kdbs	cm^3 water/g bed sediment	Bed sediment/sediment pore-water partition coefficient	COPC Data
Kds	cm^3 water/g soil	Soil-water partition coefficient	COPC Data
Kdsw	L water/kg suspended sediment	Suspended sediments/ surface water partition coefficient	COPC Data
Kow	--	Octanol-water partition coefficient	COPC Data
ksg	1/yr	COPC soil loss constant due to biotic and abiotic degradation	COPC Data
TEF	--	Toxicity equivalency factor	COPC Data
Fw	--	Fraction of COPC wet deposition that adheres to plant surfaces	COPC Data
ER	--	Soil enrichment ratio	COPC Data
Vdv	cm/s	Dry deposition velocity	COPC Data
Ds	mg COPC/kg soil/yr	Deposition term	Water Fate & Transport
Cstd	mg COPC/kg soil	Soil concentration at time tD	Water Fate & Transport
LDEP	g/yr	Total (wet and dry) particle phase and wet vapor phase COPC direct deposition load to water body	Water Fate & Transport
KG	m/yr	Gas phase transfer coefficient	Water Fate & Transport
KL	m/yr	Liquid phase transfer coefficient	Water Fate & Transport
Kv_overall	m/yr	Overall COPC transfer rate coefficient	Water Fate & Transport
Ldif	g/yr	Vapor phase COPC diffusion (dry deposition) load to water body	Water Fate & Transport
LRI	g/yr	Runoff load from impervious surfaces	Water Fate & Transport
fwc	--	Fraction of total water body COPC concentration in the water column	Water Fate & Transport
fbs	--	Fraction of total water body COPC concentration in benthic sediment	Water Fate & Transport
kv	1/yr	Water column volatilization rate constant	Water Fate & Transport
kwt	1/yr	Overall total water body COPC dissipation rate constant	Water Fate & Transport
Cs	mg COPC/kg DW soil	For cancer risk Cs is the average soil concentration over the exposure period. For noncancer health hazards Cs is equivalent to CstD.	Water Fate & Transport
LR	g/yr	Runoff load from pervious surfaces	Water Fate & Transport
LE	g/yr	Soil erosion load	Water Fate & Transport
LT	g/yr	Total COPC load to the water body (including deposition, runoff, and erosion)	Water Fate & Transport
Cwtot	g COPC/m^3 water body	Total water body COPC concentration (including water column and bed sediment)	Water Fate & Transport

RISK MODEL PARAMETERS
SDC TECHNOLOGY

Parameter	Units	Description	Category
Cwctot	mg COPC/L water column	Total COPC concentration in water column	Water Fate & Transport
Cdw	mg COPC/L water	Dissolved phase water concentration	Water Fate & Transport
Csb	mg COPC/kg sediment	COPC concentration sorbed to bed sediment	Water Fate & Transport
Cfish	mg COPC/kg FW tissue	Concentration of COPC in fish	Water Fate & Transport
Ca	µg/m^3	Air concentration	Land Fate & Transport
VGag	--	Empirical correction factor for reducing edible plant mater concentration. VG_ag and VG_bg are COPC-specific	Land Fate & Transport
Pd_ag	mg COPC/kg DW	Concentration of COPC in aboveground unprotected plants due to direct deposition	Land Fate & Transport
Pv_ag	mg COPC/kg WW	Concentration of COPC in aboveground produce due to air-to-plant transfer	Land Fate & Transport
Pr_ag	mg COPC/kg DW	Concentration of COPC in aboveground produce due to root uptake	Land Fate & Transport
Pr_bg	mg COPC/kg DW	Concentration of COPC in belowground produce due to root uptake	Land Fate & Transport
Pag	mg COPC/kg DW	Concentration of COPC in consumed potion of aboveground produce	Land Fate & Transport
Isoil	mg COPC/kg Bw-day	Daily intake of COPC from soil	Intake, Risk & Hazard
Iproduce	mg COPC/kg Bw-day	Daily intake of COPC from produce	Intake, Risk & Hazard
Ifish	mg COPC/kg Bw-day	Daily intake of COPC from fish	Intake, Risk & Hazard
Idw	mg COPC/kg Bw-day	Daily intake of COPC from drinking water	Intake, Risk & Hazard
I_oral	mg COPC/kg BW-day	Total intake via oral ingestion of contaminated media	Intake, Risk & Hazard
I_inh	mg COPC/kg BW-day	Intake of COPC intake via inhalation	Intake, Risk & Hazard
I_teq	mg COPC/kg BW-day	Daily intake of PCDDs, PCDFs, and PCBs as 2,3,7,8 TCDD TEQ	Intake, Risk & Hazard
Cbmilk	pg COPC/kg milk fat	COPC Concentration in milk fat of breast milk	Intake, Risk & Hazard
I_bmilk	pg COPC/kg BW infant/day	Intake of 2,3,7,8 TCDD TEQ for nursing infant (based on exposure scenario for the infant's mother)	Intake, Risk & Hazard
HQsoil	--	Hazard quotient	Intake, Risk & Hazard
HQproduce	--	Hazard quotient	Intake, Risk & Hazard
HQdw	--	Hazard quotient	Intake, Risk & Hazard
HQfish	--	Hazard quotient	Intake, Risk & Hazard
HQinh	--	Hazard quotient	Intake, Risk & Hazard
Cancer_oral	--	Individual lifetime cancer risk through oral exposure to COPC	Intake, Risk & Hazard
Cancer_inh	--	Individual lifetime cancer risk through inhalation exposure to COPC	Intake, Risk & Hazard
Cacute	µg/m^3	Acute air concentration	Intake, Risk & Hazard
AHQ_inh	--	Acute hazard quotient for inhalation of COPCs	Intake, Risk & Hazard

SITE-SPECIFIC AND DEFAULT CONSTANTS
SDC TECHNOLOGY

Parameter	Units	Value
BD	g/cm^3	1.5
Cd	--	0.0011
Ev	cm/yr	76.2
I	cm/yr	13.9
k	--	0.4
kp	1/yr	18
mu_a	g/cm/s	1.81E-04
P	cm/yr	113
R	atm-m^3/mol-K	8.205E-05
rho_a	g/cm^3	0.00120
rho_soil	g/cm^3	2.7
rho_w	g/cm^3	1.00
RO	cm/yr	45.72
T1	year	0
Ta	K	298
tD	yr	0.5462
theta_sw	mL/cm^3	0.2
Zs	cm	2
Rp_ag	--	0.39
Tp_ag	yr	0.16
Yp_ag	kg/m^2	2.24
Rp_f	--	0.5
Tp_f	yr	0.12
Yp_f	kg/m^2	0.24
Rp_s	--	0.46
Tp_s	yr	0.16
Yp_s	kg/m^2	0.8
VGf	--	1.0
VGs	--	0.5
MF_behp	--	0.01
h_teq	days	2,555
f1	--	0.90
f2	--	0.30
f3	--	0.04
f4	--	0.90

EXPOSURE SCENARIO SPECIFIC DATA
SDC TECHNOLOGY

Parameter	Units	Adult Resident	Child Resident	Subsistence Fisher	Subsistence Fisher Child	Farmer	Farmer Child
Scenario ID	--	**AR**	**CR**	**SF**	**SFC**	**F**	**FC**
BW	kg	70	15	70	15	70	15
IR	m^3/hr	0.83	0.497	0.83	0.497	0.83	0.497
CRsoil	kg/day	0.0001	0.0002	0.0001	0.0002	0.0001	0.0002
CRag	kg /kg/day	0.00032	0.00077	0.00032	0.00077	0.00047	0.00113
CRpp	kg /kg/day	0.00061	0.00150	0.00061	0.00150	0.00064	0.00157
CRbg	kg /kg/day	0.00014	0.00023	0.00014	0.00023	0.00017	0.00028
CRdw	L/day	1.4	0.67	1.4	0.67	1.4	0.67
CRfish	kg/kg/day			1.25E-03	8.80E-04		
CRbeef						0.00122	0.00075
CRmilk						0.01367	0.02268
CRpork						0.00055	0.00042
CRegg						0.00075	0.00054
CRchicken						0.00066	0.00045
Fsoil	--	1	1	1	1	1	1
Fproduce	--	1	1	1	1	1	1
Fdw	--	1	1	1	1	1	1
Ffish	--	0	0	1	1		
Fbeef						1	1
Fmilk						1	1
Fpork						1	1
Feggs						1	1
Fchicken						1	1
ET	hr/day	24	24	24	24	24	24
EF	day/yr	350	350	350	350	350	350
ED	yr	30	6	30	6	40	6
AT_noncancer	yr	30	6	30	6	40	6
AT_cancer	yr	70	70	70	70	70	70
eff	--	0.959	0.959	0.959	0.959	0.959	0.959
edf_nc	--	1	1	1	1	1	1
edf_c	--	0.4286	0.0857	0.4286	0.0857	0.5714	0.0857
Exposure to Receptor's Nursing Infant							
BW_infant	kg	9.4		9.4		9.4	
CRbmilk	kg/day	0.688		0.688		0.688	
edf_nursing	--	1		1		1	

ANIMAL EXPOSURE DATA
SDC TECHNOLOGY

Parameter	Units	Cow (beef)	Cow (dairy)	Pig (pork)	Chicken (egg)	Chicken
F_f	--	1	1	0	0	0
F_s		1	1	1	0	0
F_g		1	1	1	1	1
Qp_f	kg/day	8.8	13.2	0	0	0
Qp_s	kg/day	2.5	4.1	1.4	0	0
Qp_g	kg/day	0.47	3	3.3	0.2	0.2
Qs	kg/day	0.5	0.4	0.37	0.022	0.022

WATERBODY AND WATERSHED SPECIFIC DATA
SDC TECHNOLOGY

Parameter	Units	Waterbody 1	Source	Waterbody 2	Source
Name	--	Lake Vega		Upper Kentucky River	
Waterbody_type	--	Lake		River	
b	--	0.125		0.125	
AI	m^2	1.00E+06	(1)	1.00E+07	(1)
AL	m^2	1.00E+08	(1)	6.00E+08	(1)
Aw	m^2	5.46E+05	(2)	2.00E+06	(1)
C_usle	--	0.1		0.1	
CBS	g/cm^3	1		1	
dbs	m	0.03		0.03	
dwc	m	4.16	(2)	1.6	(1)
dz	m	4.19		1.63	
flipid	--	0.07		0.07	
kb	1/yr	0		1.00	
K_usle	ton/acre	0.39		0.39	
lambda_z	--	4		4	
LS_usle	--	1.5		1.5	
mu_w	g/cm-s	0.0169		0.0169	
OCsed	--	0.04		0.04	
PF_usle	--	1		1	
RF_usle	1/yr	200	(1)	200	(1)
SD	--	0.120		0.048	
theta	--	1.026		1.026	
theta_bs	--	0.6		0.6	
TSS	mg/L	10		10	
Twk	K	298		298	
u	m/s	0	(1)	0.49	(1)
Vfx	m^3/yr	4.00E+09	(1)	4.00E+08	(1)
W	m/s	3.78	(3)	3.78	(3)
Xe	kg/m^2-yr	2.62		2.62	

Aermod receptor on waterbody closest to stacks:

UTM N	m	745250		754650
UTM E	m	4176300		4184800

(1) OBOD Risk Assessment, Table D-6-3

(2) Howlett, David, *Blue Grass Army Depot to Improve Its Dam* , The Joint Ammunition Community's Bullet'n, Vol. 2, Issue 3, March 2007.

(3) 5-year average from meteorological data files

AIR MODELING RESULTS
SDC TECHNOLOGY

Parameter	Units	Rmax	Fmax	Waterbody1	Watershed	Amax	Waterbody2
Cyp	µg-s/g-m^3	0.918	0.918				
Cypb	µg-s/g-m^3	0.918	0.918				
Dytp	s/m^2-yr	0.0038	0.0038	0.001067	0.00380		0.00025
Dytpb	s/m^2-yr	0.0038	0.0038	0.001067	0.00380		0.00025
Dydp	s/m^2-yr	0.0038	0.0038				
Dydpb	s/m^2-yr	0.0038	0.0038				
Dywp	s/m^2-yr	0.00001	0.00001				
Dywpb	s/m^2-yr	0.00001	0.00001				
Chp	µg-s/g-m^3					975.000	
Chpb	µg-s/g-m^3					975.000	

Rmax: Maximum air modeling output data from residential exposure scenario locations
Fmax: Maximum air modeling output data from farmer exposure scenario locations
Waterbody: Maximum air modeling output data from receptor grid node locations over water.
Watershed: Maximum air modeling output data from receptor grid node locations over land.
Amax: Maximum air modeling output data from receptor grid node locations over land.

EMISSION RATES AND INPUTS FROM VAPOR AIR MODELING
SDC TECHNOLOGY

		SDC1	SDC2	SDC1	SDC2
CAS No.	**COPC Name**	**Q, Qa**	**Qa**	**Chv**	**Chv**
71-55-6	1,1,1-trichloroethane	7.93E-07		2.28E+02	
75-34-3	1,1-dichloroethane	3.76E-07		2.28E+02	
75-35-4	1,1-dichloroethene	3.45E-07		2.28E+02	
107-06-2	1,2-dichloroethane	3.81E-07		2.28E+02	
78-87-5	1,2-dichloropropane	4.59E-07		2.28E+02	
106-99-0	1,3-butadiene	3.30E-07		2.28E+02	
78-93-3	2-butanone	3.93E-06		2.28E+02	
67-64-1	acetone	5.85E-06		2.28E+02	
71-43-2	benzene	5.52E-07		2.28E+02	
65-85-0	benzoic acid	1.94E-05		2.28E+02	
100-51-6	benzyl alcohol	1.82E-06		2.28E+02	
117-81-7	bis(2-ethylhexyl)-phthalate	2.94E-06		2.27E+02	
75-27-4	bromodichloromethane	1.03E-06		2.28E+02	
74-83-9	bromomethane	1.92E-06		2.28E+02	
75-15-0	carbon disulfide	7.44E-07		2.28E+02	
56-23-5	carbon tetrachloride	2.06E-06		2.28E+02	
108-90-7	chlorobenzene	3.82E-07		2.28E+02	
67-66-3	chloroform	6.00E-06		2.28E+02	
74-87-3	chloromethane	2.05E-06		2.28E+02	
542-75-6	cis-1,3-dichloropropene	4.61E-07		2.28E+02	
124-48-1	dibromochloromethane	7.53E-07		2.28E+02	
75-71-8	dichlorodifluoromethane	9.76E-07		2.28E+02	
84-74-2	di-n-butyl phthalate	2.05E-06		2.27E+02	
100-41-4	ethylbenzene	4.87E-07		2.28E+02	
76-13-1	Freon 113	1.01E-06		2.28E+02	
505-60-2	H	2.23E-07	2.54E-05	2.28E+02	7.66E+02
110-54-3	hexane	8.53E-07		2.28E+02	
75-09-2	methylene chloride	4.84E-06		2.28E+02	
100-42-5	styrene	3.47E-07		2.28E+02	
127-18-4	tetrachloroethene	4.44E-07		2.28E+02	
108-88-3	toluene	2.90E-07		2.28E+02	
10061-02-6	trans-1,3-dichloropropene	4.89E-07		2.28E+02	
79-01-6	trichloroethene	4.41E-07		2.28E+02	
75-69-4	trichlorofluoromethane	5.09E-07		2.28E+02	
75-01-4	vinyl chloride	5.69E-07		2.28E+02	
1330-20-7	xylenes	1.17E-06		2.28E+02	
51207-31-9	2,3,7,8-TCDF	1.26E-12		2.27E+02	
7487-94-7	mercuric chloride	0.00E+00		2.27E+02	
7439-97-6	elemental mercury	2.22E-07		2.28E+02	

EMISSION RATES AND INPUTS FROM VAPOR AIR MODELING
SDC TECHNOLOGY

		SDC1, SDC2	SDC1	SDC1	SDC1	SDC1
CAS No.	**COPC Name**	**∑ (Chv*Q)**	**Cyv**	**Dytv**	**Cyv*Q**	**Dytv*Q**
71-55-6	1,1,1-trichloroethane	1.81E-04	9.31E-01	4.00E-05	7.39E-07	3.17E-11
75-34-3	1,1-dichloroethane	8.59E-05	9.31E-01	3.00E-05	3.50E-07	1.13E-11
75-35-4	1,1-dichloroethene	7.88E-05	9.31E-01	5.00E-05	3.21E-07	1.73E-11
107-06-2	1,2-dichloroethane	8.70E-05	9.31E-01	5.00E-05	3.55E-07	1.91E-11
78-87-5	1,2-dichloropropane	1.05E-04	9.31E-01	1.10E-04	4.27E-07	5.05E-11
106-99-0	1,3-butadiene	7.53E-05	9.31E-01	1.50E-04	3.07E-07	4.95E-11
78-93-3	2-butanone	8.97E-04	9.30E-01	3.00E-04	3.66E-06	1.18E-09
67-64-1	acetone	1.34E-03	9.30E-01	2.90E-04	5.44E-06	1.70E-09
71-43-2	benzene	1.26E-04	9.31E-01	9.00E-05	5.14E-07	4.97E-11
65-85-0	benzoic acid	4.43E-03	9.25E-01	1.61E-03	1.79E-05	3.12E-08
100-51-6	benzyl alcohol	4.15E-04	9.19E-01	3.37E-03	1.67E-06	6.13E-09
117-81-7	bis(2-ethylhexyl)-phthalate	6.67E-04	8.86E-01	1.06E-02	2.61E-06	3.11E-08
75-27-4	bromodichloromethane	2.35E-04	9.31E-01	9.00E-05	9.59E-07	9.27E-11
74-83-9	bromomethane	4.38E-04	9.31E-01	4.00E-05	1.79E-06	7.68E-11
75-15-0	carbon disulfide	1.70E-04	9.23E-01	1.85E-03	6.87E-07	1.38E-09
56-23-5	carbon tetrachloride	4.70E-04	9.31E-01	7.00E-05	1.92E-06	1.44E-10
108-90-7	chlorobenzene	8.72E-05	9.30E-01	2.80E-04	3.55E-07	1.07E-10
67-66-3	chloroform	1.37E-03	9.31E-01	4.00E-05	5.59E-06	2.40E-10
74-87-3	chloromethane	4.68E-04	9.32E-01	3.00E-05	1.91E-06	6.15E-11
542-75-6	cis-1,3-dichloropropene	1.05E-04	9.31E-01	1.00E-04	4.29E-07	4.61E-11
124-48-1	dibromochloromethane	1.72E-04	9.31E-01	1.00E-04	7.01E-07	7.53E-11
75-71-8	dichlorodifluoromethane	2.23E-04	9.31E-01	9.00E-05	9.09E-07	8.78E-11
84-74-2	di-n-butyl phthalate	4.65E-04	8.80E-01	1.23E-02	1.80E-06	2.53E-08
100-41-4	ethylbenzene	1.11E-04	9.31E-01	1.10E-04	4.53E-07	5.36E-11
76-13-1	Freon 113	2.31E-04	9.31E-01	1.00E-04	9.40E-07	1.01E-10
505-60-2	H	1.95E-02	9.30E-01	4.20E-04	2.07E-07	9.35E-11
110-54-3	hexane	1.95E-04	9.31E-01	6.00E-05	7.94E-07	5.12E-11
75-09-2	methylene chloride	1.11E-03	9.31E-01	5.00E-05	4.51E-06	2.42E-10
100-42-5	styrene	7.92E-05	9.31E-01	1.60E-04	3.23E-07	5.55E-11
127-18-4	tetrachloroethene	1.01E-04	9.30E-01	2.70E-04	4.13E-07	1.20E-10
108-88-3	toluene	6.62E-05	9.31E-01	1.10E-04	2.70E-07	3.19E-11
10061-02-6	trans-1,3-dichloropropene	1.12E-04	9.31E-01	1.20E-04	4.55E-07	5.87E-11
79-01-6	trichloroethene	1.01E-04	9.31E-01	1.00E-04	4.11E-07	4.41E-11
75-69-4	trichlorofluoromethane	1.16E-04	9.31E-01	1.00E-04	4.74E-07	5.09E-11
75-01-4	vinyl chloride	1.30E-04	9.31E-01	2.30E-04	5.30E-07	1.31E-10
1330-20-7	xylenes	2.67E-04	9.31E-01	1.10E-04	1.09E-06	1.29E-10
51207-31-9	2,3,7,8-TCDF	2.84E-10	8.60E-01	2.05E-02	1.08E-12	2.57E-14
7487-94-7	mercuric chloride	0.00E+00	8.49E-01	3.34E-02	0.00E+00	0.00E+00
7439-97-6	elemental mercury	5.07E-05	9.31E-01	3.00E-05	2.07E-07	6.66E-12

COPC TOXICITY DATA
SDC TECHNOLOGY

CAS No.	COPC Name	COPC Group	Q'	Q	Qa	kse	ksr	ksl	ksv	ks	VGag	VGbg
			g/s	g/s	g/s	1/yr	1/yr	1/yr	1/yr	1/yr	--	--
71-55-6	1,1,1-trichloroethane	Organic	1.00E+00	7.93E-07	7.93E-07		43.132	4.7424	316,710	316,759	0.01	0.01
75-34-3	1,1-dichloroethane	Organic	1.00E+00	3.76E-07	3.76E-07		78.828	8.6672	363,899	363,989	0.01	0.01
75-35-4	1,1-dichloroethene	Organic	1.00E+00	3.45E-07	3.45E-07		60.158	6.6144	1,024,649	1,024,716.272	0.01	0.01
107-06-2	1,2-dichloroethane	Organic	1.00E+00	3.81E-07	3.81E-07		90.5347	9.95441	153,014.3	153,116.2	1.00	1.00
78-87-5	1,2-dichloropropane	Organic	1.00E+00	4.59E-07	4.59E-07		68.239	7.5029	127,839	127,915	0.01	0.01
106-99-0	1,3-butadiene	Organic	1.00E+00	3.30E-07	3.30E-07		26.1257	2.87256	1,141,311	1,141,349	0.01	0.01
78-93-3	2-butanone	Organic	1.00E+00	3.93E-06	3.93E-06		36.000	3.9582	820	8.96E+02	1.00	1.00
67-64-1	acetone	Organic	1.00E+00	5.85E-06	5.85E-06		69.17	7.605	2,921	3,034	1.00	1.00
71-43-2	benzene	Organic	1.00E+00	5.52E-07	5.52E-07		60.158	6.6144	215,789	2.16E+05	0.01	0.01
65-85-0	benzoic acid	Organic	1.00E+00	1.94E-05	1.94E-05		109.38	12.026	25	147	0.01	0.01
100-51-6	benzyl alcohol	Organic	1.00E+00	1.82E-06	1.82E-06		60.158	6.6144	0	6.69E+01	1.00	1.00
117-81-7	bis(2-ethylhexyl)-phthalate	Organic	1.00E+00	2.94E-06	2.94E-06		0.00	0.000	0	11	0.01	0.01
75-27-4	bromodichloromethane	Organic	1.00E+00	1.03E-06	1.03E-06		62.630	6.8863	764	8.34E+02	0.01	0.01
74-83-9	bromomethane	Organic	1.00E+00	1.92E-06	1.92E-06		68.24	7.503	265,225	265,310	1.00	1.00
75-15-0	carbon disulfide	Organic	1.00E+00	7.44E-07	7.44E-07		67.935	7.4695	1,801,581	1.80E+06	0.01	0.01
56-23-5	carbon tetrachloride	Organic	1.00E+00	2.06E-06	2.06E-06		31.53	3.467	351,308	351,344	0.01	0.01
108-90-7	chlorobenzene	Organic	1.00E+00	3.82E-07	3.82E-07		26.581	2.9227	32,256	3.23E+04	0.01	0.01
67-66-3	chloroform	Organic	1.00E+00	6.00E-06	6.00E-06		71.44	7.855	252,747	252,828	0.01	0.01
74-87-3	chloromethane	Organic	1.00E+00	2.05E-06	2.05E-06		78.828	8.6672	973,259	9.73E+05	1.00	1.00
542-75-6	cis-1,3-dichloropropene	Organic	1.00E+00	4.61E-07	4.61E-07		67.93	7.470	650,648	650,746	1.00	1.00
124-48-1	dibromochloromethane	Organic	1.00E+00	7.53E-07	7.53E-07		18.288	2.0108	59	8.05E+01	0.01	0.01
75-71-8	dichlorodifluoromethane	Organic	1.00E+00	9.76E-07	9.76E-07		20.23	2.224	29,070	29,094	0.01	0.01
84-74-2	di-n-butyl phthalate	Organic	1.00E+00	2.05E-06	2.05E-06		0.003	0.0003	0	1.10E+01	0.01	0.01
100-41-4	ethylbenzene	Organic	1.00E+00	4.87E-07	4.87E-07		17.653	1.9409	42,649	4.27E+04	0.01	0.01
76-13-1	Freon 113	Organic	1.00E+00	1.01E-06	1.01E-06		3.865	0.4249	4,207,552	4.21E+06	0.01	0.01
505-60-2	H	Organic	1.00E+00	2.23E-07	2.56E-05		6.16	0.677	44	23,400	0.01	0.01
110-54-3	hexane	Organic	1.00E+00	8.53E-07	8.53E-07		1.029	0.1131	624,970	6.25E+05	0.01	0.01
75-09-2	methylene chloride	Organic	1.00E+00	4.84E-06	4.84E-06		96.864	10.6504	486,490	4.87E+05	1.00	1.00
100-42-5	styrene	Organic	1.00E+00	3.47E-07	3.47E-07		0.127	0.0139	84	9.31E+01	0.01	0.01
127-18-4	tetrachloroethene	Organic	1.00E+00	4.44E-07	4.44E-07		34.38	3.780	219,677	219,716	0.01	0.01
108-88-3	toluene	Organic	1.00E+00	2.90E-07	2.90E-07		30.892	3.3966	83,811	8.39E+04	0.01	0.01
10061-02-6	trans-1,3-dichloropropene	Organic	1.00E+00	4.89E-07	4.89E-07		16.686	1.8347	19,677	1.97E+04	0.01	0.01
79-01-6	trichloroethene	Organic	1.00E+00	4.41E-07	4.41E-07		32.892	3.6165	125,792	1.26E+05	0.01	0.01
75-69-4	trichlorofluoromethane	Organic	1.00E+00	5.09E-07	5.09E-07		40.82	4.488	1,847,653	1,847,699	0.01	0.01
75-01-4	vinyl chloride	Organic	1.00E+00	5.69E-07	5.69E-07		89.472	9.8375	4,064,514	4.06E+06	1.00	1.00
1330-20-7	xylenes	Organic	1.00E+00	1.17E-06	1.17E-06		3.865	0.4249	7,385	7.40E+03	0.01	0.01
51207-31-9	2,3,7,8-TCDF	PCDDs, PCDFs, PCBs	1.00E+00	1.26E-12	1.26E-12		0.002	0.0002	0	3.45E-02	0.01	0.01
7487-94-7	mercuric chloride	Inorganic	1.00E+00				0.00	0.000	0	0	1.00	1.00
7439-97-6	elemental mercury	Inorganic	1.00E+00	2.22E-07	2.22E-07		0.015	0.0017	4	4.08E+00	1.00	1.00

COPC TOXICITY DATA
SDC TECHNOLOGY

CAS No.	COPC Name	Fw	ER	Vdv	AIEC	TEF	URFi	CSFo	RfC	RfDo	BAF	BCFfish	BSAFfish	Brag	Brroot
		--	--	cm/s	mg/m^3	--	1/(µg/m^3)	1/(mg/kg/day)	mg/m^3	mg/kg/day	L/kg	L/kg	--	--	--
71-55-6	1,1,1-trichloroethane	0.600	3.00	0.50	6.80E+01				5.00E+00	2.00E+00		16.8		1.3900	88.8000
75-34-3	1,1-dichloroethane	0.600	3.00	0.50	3.00E+03		1.63E-06	5.70E-03	4.90E-01	1.00E-01		5		3.53000	189.00000
75-35-4	1,1-dichloroethene	0.600	3.00	0.50	2.50E+02				2.00E-01	5.00E-02		8		2.3700	80.1000
107-06-2	1,2-dichloroethane	0.600	3.00	0.50	2.02E+02		2.60E-05	9.10E-02	4.90E-03	2.00E-02		2.85E+00		5.26000	275.00000
78-87-5	1,2-dichloropropane	0.600	3.00	0.50	1.00E+03		1.94E-05	6.80E-02	4.00E-03	9.00E-02		7		2.700	92.6000
106-99-0	1,3-butadiene	0.600	3.00	0.50	1.48E+03		3.00E-05	3.40E+00	2.00E-03			6.80E+00		2.7400	4.14917
78-93-3	2-butanone	0.600	3.00	0.50	1.30E+01				5.00E+00	6.00E-01		3.2		8.38000	23.10000
67-64-1	acetone	0.600	3.00	0.50	4.75E+02				3.15E+00	9.00E-01		3.16E+00		8.3800	74.2000
71-43-2	benzene	0.600	3.00	0.50	1.30E+00		7.71E-06	5.50E-02	3.00E-02	4.00E-03		8.3		2.37000	80.10000
65-85-0	benzoic acid	0.600	3.00	0.50	1.25E+01					4.00E+00		3.16E+00		3.2100	2,117.0000
100-51-6	benzyl alcohol	0.600	3.00	0.50	6.00E+02					1.00E-01		0.3		8.38000	65.80000
117-81-7	bis(2-ethylhexyl)-phthalate	0.600	3.00	0.50	1.00E+01		2.40E-06	1.40E-02		2.00E-02	194	5.33E+01		0.0437	0.0009
75-27-4	bromodichloromethane	0.600	3.00	0.50	4.00E+00		3.71E-05	6.20E-02		2.00E-02		8.3		2.37000	87.40000
74-83-9	bromomethane	0.600	3.00	0.50	1.00E+02				5.00E-03	1.40E-03		1.65E+00		7.9500	91.4000
75-15-0	carbon disulfide	0.600	3.00	0.50	6.20E+00				7.00E-01	1.00E-01		9.9		2.07000	126.00000
56-23-5	carbon tetrachloride	0.600	3.00	0.50	1.90E+00		6.00E-06	7.00E-02	1.00E-01	4.00E-03		2.86E+01		0.9320	95.1000
108-90-7	chlorobenzene	0.600	3.00	0.50	4.60E+01				5.01E-02	2.00E-02		28.6		0.93200	75.60000
67-66-3	chloroform	0.600	3.00	0.50	1.50E-01		2.30E-05	3.10E-02	4.90E-02	1.00E-02		6.92E+00		2.7000	101.0000
74-87-3	chloromethane	0.600	3.00	0.50	2.00E+02				9.00E-02	2.60E-02		3.2		8.38000	119.00000
542-75-6	cis-1,3-dichloropropene	0.600	3.00	0.50	6.00E-01		4.00E-06	1.00E-01	2.00E-02	3.00E-02		3.40E+00		4.6000	113.0000
124-48-1	dibromochloromethane	0.600	3.00	0.50	1.25E+02		2.69E-05	8.40E-02		2.00E-02		10.4		1.99000	17.30000
75-71-8	dichlorodifluoromethane	0.600	3.00	0.50	1.50E+04				1.00E-01	2.00E-01		9.19E+00		2.1900	17.4000
84-74-2	di-n-butyl phthalate	0.600	3.00	0.50	1.00E+01					1.00E-01	1,805	830.0		0.07400	0.18600
100-41-4	ethylbenzene	0.600	3.00	0.50	1.43E+02		2.53E-05	1.10E-02	1.00E+00	1.00E-01		48.6		0.62500	77.60000
76-13-1	Freon 113	0.600	3.00	0.50	1.00E+04				3.00E+01	3.00E+01		54.1		0.58000	2.30715
505-60-2	H	0.600	3.00	0.50	6.50E-02		4.00E-03	7.70E+00	2.10E-05	7.00E-06		1.43E+01		1.5700	0.9095
110-54-3	hexane	0.600	3.00	0.50	1.50E+03				7.00E-01	1.10E+01		200.9		0.22000	2.07145
75-09-2	methylene chloride	0.600	3.00	0.50	1.40E+01		1.00E-08	7.50E-03	6.00E-01	6.00E-02		2.0		6.86000	359.00000
100-42-5	styrene	0.600	3.00	0.50	2.10E+01				1.00E+00	2.00E-01		40.7		0.71400	0.39500
127-18-4	tetrachloroethene	0.600	3.00	0.50	2.00E+01		2.60E-07	5.40E-01	4.00E-02	1.00E-02		8.28E+01		0.4200	311.0000
108-88-3	toluene	0.600	3.00	0.50	3.70E+01				5.00E+00	8.00E-02		23.9		1.07000	77.40000
10061-02-6	trans-1,3-dichloropropene	0.600	3.00	0.50	7.50E+01		4.00E-06	1.00E-01	1.07E-01	3.00E-02		11.6		1.84000	2.28510
79-01-6	trichloroethene	0.600	3.00	0.50	6.98E+02		1.14E-04	4.00E-01	2.00E-03	3.00E-04		14.1		1.59000	49.60000
75-69-4	trichlorofluoromethane	0.600	3.00	0.50	5.00E+03				7.00E-01	3.00E-01		1.68E+01		1.3900	81.4000
75-01-4	vinyl chloride	0.600	3.00	0.50	1.80E+02		4.29E-06	7.20E-01	1.00E-01	3.00E-03		2.4		6.01000	246.00000
1330-20-7	xylenes	0.600	3.00	0.50	2.20E+01				1.00E-01	2.00E-01		54.1		0.57800	2.30715
51207-31-9	2,3,7,8-TCDF	0.600	3.00	0.50	6.00E-04	1.00E-01						9,931.0	0	0.01150	1.49000
7487-94-7	mercuric chloride	0.600	1.00	0.50	4.00E+00				3.00E-05	3.00E-04				0.0145	0.0360
7439-97-6	elemental mercury	0.600	1.00	0.50	6.00E-04				3.00E-04						

COPC TOXICITY DATA
SDC TECHNOLOGY

CAS No.	COPC Name	Bvag	Babeef	Bamilk	Bapork	Baeggs	Bapoult	Brf/s	Bvforage	Brgrain	Da	Dw	Fv	H	Kdbs
		--	day/kg	day/kg	day/kg	day/kg	day/kg	--	--	--	cm^2/s	cm^2/s	--	atm·m^3/mol	cm^3/g
71-55-6	1,1,1-trichloroethane	0	0.00596	1.25E-03	0	0	0	1.390	0	1.3900	0.0780	8.80E-06		0.01700	5.4
75-34-3	1,1-dichloroethane	0	0.00211	4.44E-04	0	0	0	3.5300	0	3.53000	0.0742	1.05E-05	1.00000	0.006	2.1
75-35-4	1,1-dichloroethene	0	3.38E-03	7.12E-04	0	0	0	2.370	0	2.3700	0.0900	1.04E-05	1.00000	0.026	2.6
107-06-2	1,2-dichloroethane	0	0.00126	2.66E-04	0	0	0	5.2600	0	5.26000	0.1040	9.90E-06	1.00000	0.0010	2
78-87-5	1,2-dichloropropane	0	2.90E-03	6.11E-04	3.51E-03	0.00122	0.002	2.700	0	2.7000	0.0782	8.73E-06	1.00000	0.0028	1.9
106-99-0	1,3-butadiene	0	2.86E-03	6.00E-04	0	0	0	2.7400	0	2.74000	0.1328	1.54E-05	1.00000	0.0736	2
78-93-3	2-butanone	0	0.00010	0.00002	0	0	0	8.3800	0	8.38000	0.0808	9.80E-06	1.00000	0.0001	0.1
67-64-1	acetone	0	0.00003	0.00001	0.000	0.00	0.00	8.3800	0	8.38000	0.1240	1.14E-05	1	0.00004	2.00E-02
71-43-2	benzene	0	0.00338	0.00071	0	0	0	2.3700	0	2.37000	0.0880	1.02E-05	1.00000	0.0056	2.5
65-85-0	benzoic acid	2	0.00006	0.00001	0.000	0.00	0.00	3.2100	2	3.21000	0.0010	7.97E-06	1	0.00000	2.40E-02
100-51-6	benzyl alcohol	2	0.00060	0.00013	0	0	0	8.3800	2	8.38000	0.0010	1.00E-05	1.00000	0.0000	0.5
117-81-7	bis(2-ethylhexyl)-phthalate	150,975	0.03988	0.00840	0.048	0.02	0.03	0.0437	150,975	0.04370	0.0351	3.66E-06	0	0.00000	4.44E+03
75-27-4	bromodichloromethane	0	0.00338	0.00071	0	0	0	2.3700	0	2.37000	0.0010	1.00E-05	1.00000	0.0016	2.2
74-83-9	bromomethane	0	0.00071	0.00015	0.001	0.00	0.00	7.9500	0	7.95000	0.0728	1.21E-05	1	0.00624	3.60E-01
75-15-0	carbon disulfide	0	0.00392	0.00083	0	0	0	2.0700	0	2.07000	0.1040	1.00E-05	1.00000	0.0300	2.7
56-23-5	carbon tetrachloride	0	0.00868	0.00183	0.011	0.00	0.01	0.9320	0	0.93200	0.0780	8.80E-06	1	0.03000	6.08E+00
108-90-7	chlorobenzene	0	0.00868	0.00183	0	0	0	0.9320	0	0.93200	0.0730	8.70E-06	1.00000	0.0037	9.0
67-66-3	chloroform	0	0.00290	0.00061	0.004	0.00	0.00	2.7000	0	2.70000	0.1040	1.00E-05	1	0.00370	2.10E+00
74-87-3	chloromethane	0	0.00041	0.00009	0	0	0	8.3800	0	8.38000	0.1260	6.50E-06	1.00000	0.0088	0.3
542-75-6	cis-1,3-dichloropropene	0	0.00150	0.00032	0.002	0.00	0.00	4.6000	0	4.60000	0.0626	1.00E-05	1	0.01800	1.08E+00
124-48-1	dibromochloromethane	0	0.00410	0.00086	0	0	0	1.9900	0	1.99000	0.0010	1.00E-05	1.00000	0.0008	2.8
75-71-8	dichlorodifluoromethane	0	0.00370	0.00078	0.004	0.00	0.00	2.1900	0	2.19000	0.0010	1.00E-05	1	0.34300	2.46E+00
84-74-2	di-n-butyl phthalate	3,145	0.03638	0.00766	0	0	0	0.0744	3,145	0.07440	0.0438	7.86E-06	0.99400	0.0000	62.8
100-41-4	ethylbenzene	0	0.01214	0.00256	0	0	0	0.6250	0	0.62500	0.0750	7.80E-06	1.00000	0.0079	8.2
76-13-1	Freon 113	2	0.01292	0.00272	0	0	0	0.5800	2	0.58000	0.5800	6.70E-06	1.00000	0.5260	15.2
505-60-2	H	1	0.00528	0.00111	0.006	0.00	0.00	1.5700	1	1.57000	0.0650	7.50E-06	1	0.00003	9.34E+00
110-54-3	hexane		0.02430	0.00512	0	0	0	0.2200		0.22000	0.0970	1.13E-05	1.00000	1.8000	58.7
75-09-2	methylene chloride	0	0.00088	0.00018	0	0	0	6.8600	0	6.86000	0.1010	1.17E-05	1.00000	0.0022	0.4
100-42-5	styrene	0	0.01091	0.00230	0	0	0	0.7140	0	0.71400	0.0710	8.00E-06	1.00000	0.0027	36.5
127-18-4	tetrachloroethene	0	0.01630	0.00343	0.020	0.01	0.01	0.4200	0	0.42000	0.0720	8.20E-06	1	0.01800	1.06E+01
108-88-3	toluene	0	0.00769	0.00162	0	0	0	1.0700	0	1.07000	0.0870	8.60E-06	1.00000	0.0066	5.6
10061-02-6	trans-1,3-dichloropropene	0	0.00470	0.00094	0	0	0	1.8400	0	1.84000	0.0823	9.50E-06	1.00000	0.0036	3.1
79-01-6	trichloroethene	0	0.00521	0.00110	0	0	0	1.5900	0	1.59000	0.0790	9.10E-06	1.00000	0.0100	3.8
75-69-4	trichlorofluoromethane	0	0.00596	0.00125	0.007	0.00	0.00	1.3900	0	1.39000	0.0870	9.70E-06	1	0.09700	4.57E+00
75-01-4	vinyl chloride	0	0.00105	0.00022	0	0	0	6.0100	0	6.01000	0.1060	1.23E-05	1.00000	0.0270	0.6
1330-20-7	xylenes	0	0.01290	0.00272	0	0	0	0.5780	0	0.57800	0.0850	9.80E-06	1.00000	0.0063	15.2
51207-31-9	2,3,7,8-TCDF	45,700	0.03647	0.00768	0	0	0	0.0115	45,700	0.01150	0.0235	6.01E-06	0.77000	0.0000	31,049.9
7487-94-7	mercuric chloride	1,800	0.00522	0.00226	0.000	0.02	0.02		1,800	0.00930	0.0453	5.25E-06	1	0.00000	5.00E+04
7439-97-6	elemental mercury										0.0109	3.01E-05	1.00000	0.0071	3,000.0

CALCULATIONS FOR ESTIMATING FISH AND SEDIMENT CONCENTRATIONS - LAKE VEGA
SDC TECHNOLOGY

CAS No.	COPC Name	Ds	CstD	LDEP	KG	KL	Kv_overall
		mg/kg/yr	mg/kg	g/yr	m/yr	m/yr	m/yr
71-55-6	1,1,1-trichloroethane	1.00E-07	3.17E-13	4.62E-04	469,860	160	182
75-34-3	1,1-dichloroethane	3.76E-10	1.03E-15	6.16E-06	454,398	180	204
75-35-4	1,1-dichloroethene	5.75E-10	5.61E-16	9.42E-06	517,140	179	203
107-06-2	1,2-dichloroethane	6.35E-10	4.15E-15	1.04E-05	569,742	173	195
78-87-5	1,2-dichloropropane	1.68E-09	1.32E-14	2.76E-05	470,667	159	180
106-99-0	1,3-butadiene	1.65E-09	1.45E-15	2.70E-05	671,132	232	264
78-93-3	2-butanone	3.93E-08	4.39E-11	6.44E-04	481,095	172	169
67-64-1	acetone	5.66E-08	1.86E-11	9.27E-04	641,000	190	182
71-43-2	benzene	1.66E-09	7.67E-15	2.71E-05	509,412	176	200
65-85-0	benzoic acid	1.04E-06	7.10E-09	1.71E-02	25,367	150	3
100-51-6	benzyl alcohol	2.04E-07	3.06E-09	3.35E-03	25,367	174	0
117-81-7	bis(2-ethylhexyl)-phthalate	4.59E-07	4.15E-08	3.71E-03	275,183	89	1
75-27-4	bromodichloromethane	3.09E-09	3.71E-12	5.06E-05	25,367	174	179
74-83-9	bromomethane	2.56E-09	9.65E-15	4.20E-05	448,635	198	225
75-15-0	carbon disulfide	4.59E-08	2.55E-14	7.52E-04	569,742	174	198
56-23-5	carbon tetrachloride	4.81E-09	1.37E-14	7.88E-05	469,860	160	182
108-90-7	chlorobenzene	3.57E-09	1.10E-13	5.84E-05	449,461	159	180
67-66-3	chloroform	8.00E-09	3.16E-14	1.31E-04	569,742	174	198
74-87-3	chloromethane	2.05E-09	2.11E-15	3.36E-05	647,909	130	148
542-75-6	cis-1,3-dichloropropene	1.54E-09	2.36E-15	2.52E-05	405,481	174	198
124-48-1	dibromochloromethane	2.51E-09	3.12E-11	4.11E-05	25,367	174	163
75-71-8	dichlorodifluoromethane	2.93E-09	1.01E-13	4.80E-05	25,367	174	198
84-74-2	di-n-butyl phthalate	8.40E-07	7.61E-08	1.37E-02	319,193	148	23
100-41-4	ethylbenzene	1.79E-09	4.18E-14	2.93E-05	457,674	147	167
76-13-1	Freon 113	3.37E-09	8.00E-16	5.52E-05	1,802,031	133	151
505-60-2	H	3.12E-09	1.33E-13	5.11E-05	415,832	144	127
110-54-3	hexane	1.71E-09	2.73E-15	2.80E-05	543,754	189	215
75-09-2	methylene chloride	8.07E-09	1.66E-14	1.32E-04	558,677	193	219
100-42-5	styrene	1.85E-09	1.99E-11	3.03E-05	441,173	150	170
127-18-4	tetrachloroethene	4.00E-09	1.82E-14	6.55E-05	445,326	152	173
108-88-3	toluene	1.06E-09	1.27E-14	1.74E-05	505,526	157	179
10061-02-6	trans-1,3-dichloropropene	1.96E-09	9.93E-14	3.21E-05	486,974	168	191
79-01-6	trichloroethene	1.47E-09	1.17E-14	2.41E-05	473,888	163	186
75-69-4	trichlorofluoromethane	1.70E-09	9.18E-16	2.78E-05	505,526	171	194
75-01-4	vinyl chloride	4.36E-09	1.07E-15	7.15E-05	577,059	200	227
1330-20-7	xylenes	4.29E-09	5.80E-13	7.03E-05	497,710	172	195
51207-31-9	2,3,7,8-TCDF	6.97E-13	3.77E-13	1.10E-08	210,320	124	70
7487-94-7	mercuric chloride	0.00E+00	0.00E+00	0.00E+00	326,537	113	0
7439-97-6	elemental mercury	2.22E-10	4.85E-11	3.64E-06	125,702	364	410

CALCULATIONS FOR ESTIMATING FISH AND SEDIMENT CONCENTRATIONS - LAKE VEGA
SDC TECHNOLOGY

CAS No.	COPC Name	Ldif g/yr	LRI g/yr	fwc	fbs	kv 1/yr	kwt 1/yr
71-55-6	1,1,1-trichloroethane	0.00E+00	3.01E-03	0.959	0.041	4.34E+01	4.16E+01
75-34-3	1,1-dichloroethane	1.71E-04	1.13E-05	0.981	0.019	4.88E+01	4.78E+01
75-35-4	1,1-dichloroethene	3.35E-05	1.73E-05	0.977	0.023	4.85E+01	4.74E+01
107-06-2	1,2-dichloroethane	9.44E-04	1.91E-05	0.985	0.015	4.66E+01	4.59E+01
78-87-5	1,2-dichloropropane	3.67E-04	5.05E-05	0.982	0.018	4.30E+01	4.23E+01
106-99-0	1,3-butadiene	1.47E-05	4.95E-05	0.983	0.017	6.31E+01	6.20E+01
78-93-3	2-butanone	1.47E-01	1.18E-03	0.995	0.005	4.03E+01	4.01E+01
67-64-1	acetone	3.40E-01	1.70E-03	0.996	0.004	4.35E+01	4.33E+01
71-43-2	benzene	2.46E-04	4.97E-05	0.978	0.022	4.78E+01	4.68E+01
65-85-0	benzoic acid	2.77E-01	3.12E-02	0.996	0.004	7.93E-01	7.89E-01
100-51-6	benzyl alcohol	2.63E-02	6.13E-03	0.992	0.008	9.47E-02	9.40E-02
117-81-7	bis(2-ethylhexyl)-phthalate	5.76E-02	1.38E-02	0.033	0.967	2.79E-01	9.11E-03
75-27-4	bromodichloromethane	1.43E-03	9.27E-05	0.980	0.020	4.28E+01	4.19E+01
74-83-9	bromomethane	8.60E-04	7.68E-05	0.993	0.007	5.36E+01	5.32E+01
75-15-0	carbon disulfide	6.05E-05	1.38E-03	0.977	0.023	4.73E+01	4.62E+01
56-23-5	carbon tetrachloride	1.55E-04	1.44E-04	0.954	0.046	4.34E+01	4.14E+01
108-90-7	chlorobenzene	2.31E-04	1.07E-04	0.935	0.065	4.29E+01	4.02E+01
67-66-3	chloroform	3.99E-03	2.40E-04	0.981	0.019	4.72E+01	4.63E+01
74-87-3	chloromethane	4.29E-04	6.15E-05	0.994	0.006	3.54E+01	3.52E+01
542-75-6	cis-1,3-dichloropropene	6.30E-05	4.61E-05	0.988	0.012	4.72E+01	4.67E+01
124-48-1	dibromochloromethane	1.95E-03	7.53E-05	0.976	0.024	3.89E+01	3.80E+01
75-71-8	dichlorodifluoromethane	7.00E-06	8.78E-05	0.978	0.022	4.72E+01	4.62E+01
84-74-2	di-n-butyl phthalate	3.07E-01	2.52E-02	0.686	0.314	5.50E+00	3.78E+00
100-41-4	ethylbenzene	1.28E-04	5.36E-05	0.941	0.059	4.00E+01	3.76E+01
76-13-1	Freon 113	3.61E-06	1.01E-04	0.897	0.103	3.61E+01	3.24E+01
505-60-2	H	1.17E-02	9.35E-05	0.933	0.067	3.04E+01	2.84E+01
110-54-3	hexane	1.27E-06	5.12E-05	0.700	0.300	5.12E+01	3.59E+01
75-09-2	methylene chloride	6.00E-03	2.42E-04	0.993	0.007	5.23E+01	5.19E+01
100-42-5	styrene	2.72E-04	5.55E-05	0.789	0.211	4.06E+01	3.20E+01
127-18-4	tetrachloroethene	5.31E-05	1.20E-04	0.925	0.075	4.14E+01	3.83E+01
108-88-3	toluene	9.77E-05	3.19E-05	0.957	0.043	4.27E+01	4.08E+01
10061-02-6	trans-1,3-dichloropropene	3.27E-04	5.87E-05	0.974	0.026	4.56E+01	4.44E+01
79-01-6	trichloroethene	1.02E-04	4.41E-05	0.969	0.031	4.43E+01	4.30E+01
75-69-4	trichlorofluoromethane	1.27E-05	5.09E-05	0.964	0.036	4.63E+01	4.46E+01
75-01-4	vinyl chloride	5.95E-05	1.31E-04	0.991	0.009	5.43E+01	5.38E+01
1330-20-7	xylenes	4.50E-04	1.29E-04	0.897	0.103	4.66E+01	4.18E+01
51207-31-9	2,3,7,8-TCDF	5.43E-08	2.09E-08	0.007	0.993	1.06E+01	7.45E-02
7487-94-7	mercuric chloride	0.00E+00	0.00E+00	0.006	0.994	1.29E-03	7.10E-06
7439-97-6	elemental mercury	1.60E-04	6.66E-06	0.045	0.955	9.70E+01	4.32E+00

CALCULATIONS FOR ESTIMATING FISH AND SEDIMENT CONCENTRATIONS - LAKE VEGA
SDC TECHNOLOGY
(for Noncancer Hazards)

CAS No.	COPC Name	Cs	LR	LE	LT	Cwtot	Cwctot	Cdw	Csb	Cfish
		mg/kg	g/yr	g/yr	g/yr	g/m^3	mg/L	mg/L	mg/kg	mg/kg
71-55-6	1,1,1-trichloroethane	3.17E-13	4.06E-05	1.85E-08	3.52E-03	8.95E-13	8.64E-13	8.64E-13	4.67E-12	1.45E-11
75-34-3	1,1-dichloroethane	1.03E-15	2.42E-07	3.00E-11	1.88E-04	4.67E-14	4.61E-14	4.61E-14	9.87E-14	2.24E-13
75-35-4	1,1-dichloroethene	5.61E-16	1.00E-07	2.48E-11	6.03E-05	1.50E-14	1.48E-14	1.48E-14	3.84E-14	1.22E-13
107-06-2	1,2-dichloroethane	4.15E-15	1.12E-06	8.06E-11	9.74E-04	2.41E-13	2.39E-13	2.39E-13	3.63E-13	6.81E-13
78-87-5	1,2-dichloropropane	1.32E-14	2.67E-06	4.96E-10	4.48E-04	1.11E-13	1.10E-13	1.10E-13	2.07E-13	7.62E-13
106-99-0	1,3-butadiene	1.45E-15	1.12E-07	1.04E-10	9.14E-05	2.24E-14	2.22E-14	2.22E-14	4.00E-14	1.51E-13
78-93-3	2-butanone	4.39E-11	4.69E-03	2.81E-06	1.54E-01	3.78E-11	3.79E-11	3.79E-11	3.03E-12	1.20E-10
67-64-1	acetone	1.86E-11	3.83E-03	6.88E-07	3.46E-01	8.48E-11	8.50E-11	8.50E-11	1.70E-12	2.69E-10
71-43-2	benzene	7.67E-15	1.37E-06	3.40E-10	3.24E-04	8.05E-14	7.94E-14	7.94E-14	1.96E-13	6.55E-13
65-85-0	benzoic acid	7.10E-09	2.31E+00	2.86E-05	2.63E+00	6.61E-10	6.63E-10	6.63E-10	1.59E-11	2.09E-09
100-51-6	benzyl alcohol	3.06E-09	5.46E-01	1.35E-04	5.82E-01	1.47E-10	1.46E-10	1.46E-10	7.03E-11	4.60E-11
117-81-7	bis(2-ethylhexyl)-phthalate	4.15E-08	8.17E-07	3.88E-03	7.90E-02	6.04E-10	1.99E-11	1.84E-11	8.15E-08	3.57E-09
75-27-4	bromodichloromethane	3.71E-12	6.89E-04	1.57E-07	2.27E-03	5.65E-13	5.57E-13	5.57E-13	1.23E-12	4.60E-12
74-83-9	bromomethane	9.65E-15	1.96E-06	3.63E-10	9.80E-04	2.39E-13	2.39E-13	2.39E-13	8.62E-14	3.95E-13
75-15-0	carbon disulfide	2.55E-14	5.14E-06	9.66E-10	2.19E-03	5.47E-13	5.38E-13	5.38E-13	1.43E-12	5.30E-12
56-23-5	carbon tetrachloride	1.37E-14	1.28E-06	9.26E-10	3.79E-04	9.70E-14	9.32E-14	9.32E-14	5.67E-13	2.67E-12
108-90-7	chlorobenzene	1.10E-13	8.72E-06	7.92E-09	4.05E-04	1.06E-13	9.95E-14	9.95E-14	8.92E-13	2.85E-12
67-66-3	chloroform	3.16E-14	6.71E-06	1.11E-09	4.36E-03	1.08E-12	1.07E-12	1.07E-12	2.25E-12	7.40E-12
74-87-3	chloromethane	2.11E-15	4.93E-07	6.11E-11	5.24E-04	1.29E-13	1.29E-13	1.29E-13	3.23E-14	4.09E-13
542-75-6	cis-1,3-dichloropropene	2.36E-15	4.76E-07	8.95E-11	1.35E-04	3.32E-14	3.30E-14	3.30E-14	3.57E-14	1.12E-13
124-48-1	dibromochloromethane	3.12E-11	1.69E-03	2.45E-06	3.76E-03	9.43E-13	9.27E-13	9.27E-13	2.59E-12	9.64E-12
75-71-8	dichlorodifluoromethane	1.01E-13	6.05E-06	7.74E-09	1.49E-04	3.70E-14	3.65E-14	3.65E-14	8.98E-14	3.35E-13
84-74-2	di-n-butyl phthalate	7.61E-08	6.63E-04	7.12E-03	3.54E-01	1.28E-10	8.88E-11	8.87E-11	5.57E-09	1.60E-07
100-41-4	ethylbenzene	4.18E-14	2.19E-06	3.31E-09	2.13E-04	5.55E-14	5.25E-14	5.25E-14	4.29E-13	2.55E-12
76-13-1	Freon 113	8.00E-16	9.18E-09	7.23E-11	1.60E-04	4.36E-14	3.94E-14	3.94E-14	6.01E-13	2.13E-12
505-60-2	H	1.33E-13	2.44E-06	1.18E-08	1.19E-02	3.13E-12	2.94E-12	2.94E-12	2.75E-11	4.21E-11
110-54-3	hexane	2.73E-15	8.34E-09	2.53E-10	8.04E-05	2.79E-14	1.97E-14	1.97E-14	1.15E-12	3.95E-12
75-09-2	methylene chloride	1.66E-14	4.77E-06	2.36E-10	6.37E-03	1.56E-12	1.56E-12	1.56E-12	6.23E-13	3.12E-12
100-42-5	styrene	1.99E-11	7.49E-06	1.86E-06	3.67E-04	1.14E-13	9.03E-14	9.02E-14	3.29E-12	3.67E-12
127-18-4	tetrachloroethene	1.82E-14	1.86E-06	1.19E-09	2.40E-04	6.34E-14	5.91E-14	5.91E-14	6.27E-13	4.89E-12
108-88-3	toluene	1.27E-14	1.16E-06	8.65E-10	1.48E-04	3.78E-14	3.64E-14	3.64E-14	2.04E-13	8.70E-13
10061-02-6	trans-1,3-dichloropropene	9.93E-14	4.92E-06	7.93E-09	4.23E-04	1.06E-13	1.04E-13	1.04E-13	3.24E-13	1.20E-12
79-01-6	trichloroethene	1.17E-14	1.14E-06	7.78E-10	1.71E-04	4.31E-14	4.20E-14	4.20E-14	1.58E-13	5.93E-13
75-69-4	trichlorofluoromethane	9.18E-16	1.11E-07	5.52E-11	9.15E-05	2.31E-14	2.24E-14	2.24E-14	1.03E-13	3.77E-13
75-01-4	vinyl chloride	1.07E-15	2.85E-07	2.18E-11	2.62E-04	6.41E-14	6.40E-14	6.40E-14	3.97E-14	1.53E-13
1330-20-7	xylenes	5.80E-13	6.66E-06	5.24E-08	6.56E-04	1.78E-13	1.61E-13	1.61E-13	2.45E-12	8.70E-12
51207-31-9	2,3,7,8-TCDF	3.77E-13	2.20E-09	3.53E-08	1.24E-07	4.38E-15	3.09E-17	1.96E-17	6.07E-13	9.57E-14
7487-94-7	mercuric chloride	0.00E+00	0.00E+00	0.00E+00	0.00E+00	0.00E+00	0.00E+00	0.00E+00	0.00E+00	0.00E+00
7439-97-6	elemental mercury	4.85E-11	2.20E-06	1.51E-06	1.74E-04	9.22E-13	4.14E-14	4.10E-14	1.23E-10	0.00E+00

CALCULATIONS FOR ESTIMATING FISH AND SEDIMENT CONCENTRATIONS - LAKE VEGA
SDC TECHNOLOGY
(for Cancer Risks)

CAS No.	COPC Name	Cs mg/kg	LR g/yr	LE g/yr	LT g/yr	Cwtot g/m^3	Cwctot mg/L	Cdw mg/L	Csb mg/kg	Cfish mg/kg
71-55-6	1,1,1-trichloroethane	3.17E-13	4.06E-05	1.85E-08	3.52E-03	8.95E-13	8.64E-13	8.64E-13	4.67E-12	1.45E-11
75-34-3	1,1-dichloroethane	1.03E-15	2.42E-07	3.00E-11	1.88E-04	4.67E-14	4.61E-14	4.61E-14	9.87E-14	2.24E-13
75-35-4	1,1-dichloroethene	5.61E-16	1.00E-07	2.48E-11	6.03E-05	1.50E-14	1.48E-14	1.48E-14	3.84E-14	1.22E-13
107-06-2	1,2-dichloroethane	4.15E-15	1.12E-06	8.06E-11	9.74E-04	2.41E-13	2.39E-13	2.39E-13	3.63E-13	6.81E-13
78-87-5	1,2-dichloropropane	1.32E-14	2.67E-06	4.96E-10	4.48E-04	1.11E-13	1.10E-13	1.10E-13	2.07E-13	7.62E-13
106-99-0	1,3-butadiene	1.45E-15	1.12E-07	1.04E-10	9.14E-05	2.24E-14	2.22E-14	2.22E-14	4.00E-14	1.51E-13
78-93-3	2-butanone	4.38E-11	4.68E-03	2.80E-06	1.54E-01	3.78E-11	3.79E-11	3.79E-11	3.03E-12	1.20E-10
67-64-1	acetone	1.86E-11	3.83E-03	6.88E-07	3.46E-01	8.48E-11	8.50E-11	8.50E-11	1.70E-12	2.69E-10
71-43-2	benzene	7.67E-15	1.37E-06	3.40E-10	3.24E-04	8.05E-14	7.94E-14	7.94E-14	1.96E-13	6.55E-13
65-85-0	benzoic acid	7.02E-09	2.28E+00	2.82E-05	2.60E+00	6.54E-10	6.56E-10	6.56E-10	1.57E-11	2.07E-09
100-51-6	benzyl alcohol	2.97E-09	5.31E-01	1.32E-04	5.67E-01	1.43E-10	1.43E-10	1.43E-10	6.85E-11	4.48E-11
117-81-7	bis(2-ethylhexyl)-phthalate	3.47E-08	6.83E-07	3.25E-03	7.83E-02	5.99E-10	1.97E-11	1.82E-11	8.08E-08	3.54E-09
75-27-4	bromodichloromethane	3.70E-12	6.88E-04	1.56E-07	2.27E-03	5.64E-13	5.57E-13	5.57E-13	1.23E-12	4.60E-12
74-83-9	bromomethane	9.65E-15	1.96E-06	3.63E-10	9.80E-04	2.39E-13	2.39E-13	2.39E-13	8.62E-14	3.95E-13
75-15-0	carbon disulfide	2.55E-14	5.14E-06	9.66E-10	2.19E-03	5.47E-13	5.38E-13	5.38E-13	1.43E-12	5.30E-12
56-23-5	carbon tetrachloride	1.37E-14	1.28E-06	9.26E-10	3.79E-04	9.70E-14	9.32E-14	9.32E-14	5.67E-13	2.67E-12
108-90-7	chlorobenzene	1.10E-13	8.72E-06	7.92E-09	4.05E-04	1.06E-13	9.95E-14	9.95E-14	8.92E-13	2.85E-12
67-66-3	chloroform	3.16E-14	6.71E-06	1.11E-09	4.36E-03	1.08E-12	1.07E-12	1.07E-12	2.25E-12	7.40E-12
74-87-3	chloromethane	2.11E-15	4.93E-07	6.11E-11	5.24E-04	1.29E-13	1.29E-13	1.29E-13	3.23E-14	4.09E-13
542-75-6	cis-1,3-dichloropropene	2.36E-15	4.76E-07	8.95E-11	1.35E-04	3.32E-14	3.30E-14	3.30E-14	3.57E-14	1.12E-13
124-48-1	dibromochloromethane	3.05E-11	1.66E-03	2.39E-06	3.72E-03	9.33E-13	9.17E-13	9.17E-13	2.57E-12	9.54E-12
75-71-8	dichlorodifluoromethane	1.01E-13	6.05E-06	7.74E-09	1.49E-04	3.70E-14	3.65E-14	3.65E-14	8.98E-14	3.35E-13
84-74-2	di-n-butyl phthalate	6.36E-08	5.54E-04	5.95E-03	3.52E-01	1.28E-10	8.85E-11	8.84E-11	5.55E-09	1.59E-07
100-41-4	ethylbenzene	4.18E-14	2.19E-06	3.31E-09	2.13E-04	5.55E-14	5.25E-14	5.25E-14	4.29E-13	2.55E-12
76-13-1	Freon 113	8.00E-16	9.18E-09	7.23E-11	1.60E-04	4.36E-14	3.94E-14	3.94E-14	6.01E-13	2.13E-12
505-60-2	H	1.33E-13	2.44E-06	1.18E-08	1.19E-02	3.13E-12	2.94E-12	2.94E-12	2.75E-11	4.21E-11
110-54-3	hexane	2.73E-15	8.34E-09	2.53E-10	8.04E-05	2.79E-14	1.97E-14	1.97E-14	1.15E-12	3.95E-12
75-09-2	methylene chloride	1.66E-14	4.77E-06	2.36E-10	6.37E-03	1.56E-12	1.56E-12	1.56E-12	6.23E-13	3.12E-12
100-42-5	styrene	1.95E-11	7.34E-06	1.82E-06	3.67E-04	1.14E-13	9.02E-14	9.02E-14	3.29E-12	3.67E-12
127-18-4	tetrachloroethene	1.82E-14	1.86E-06	1.19E-09	2.40E-04	6.34E-14	5.91E-14	5.91E-14	6.27E-13	4.89E-12
108-88-3	toluene	1.27E-14	1.16E-06	8.65E-10	1.48E-04	3.78E-14	3.64E-14	3.64E-14	2.04E-13	8.70E-13
10061-02-6	trans-1,3-dichloropropene	9.93E-14	4.92E-06	7.93E-09	4.23E-04	1.06E-13	1.04E-13	1.04E-13	3.24E-13	1.20E-12
79-01-6	trichloroethene	1.17E-14	1.14E-06	7.78E-10	1.71E-04	4.31E-14	4.20E-14	4.20E-14	1.58E-13	5.93E-13
75-69-4	trichlorofluoromethane	9.18E-16	1.11E-07	5.52E-11	9.15E-05	2.31E-14	2.24E-14	2.24E-14	1.03E-13	3.77E-13
75-01-4	vinyl chloride	1.07E-15	2.85E-07	2.18E-11	2.62E-04	6.41E-14	6.40E-14	6.40E-14	3.97E-14	1.53E-13
1330-20-7	xylenes	5.80E-13	6.65E-06	5.24E-08	6.56E-04	1.78E-13	1.61E-13	1.61E-13	2.45E-12	8.70E-12
51207-31-9	2,3,7,8-TCDF	1.89E-13	1.10E-09	1.77E-08	1.05E-07	3.72E-15	2.63E-17	1.66E-17	5.16E-13	8.12E-14
7487-94-7	mercuric chloride	0.00E+00	0.00E+00	0.00E+00	0.00E+00	0.00E+00	0.00E+00	0.00E+00	0.00E+00	0.00E+00
7439-97-6	elemental mercury	3.26E-11	1.48E-06	1.02E-06	1.72E-04	9.16E-13	4.11E-14	4.07E-14	1.22E-10	0.00E+00

CALCULATIONS FOR ESTIMATING DRINKING WATER AND SEDIMENT CONCENTRATIONS - KENTUCKY RIVER
SDC TECHNOLOGY

CAS No.	COPC Name	Ds	CstD	LDEP	KG	KL	Kv_overall	Ldif	LRI	fwc	fbs	kv	kwt
		mg/kg/yr	mg/kg	g/yr	m/yr	m/yr	m/yr	g/yr	g/yr			1/yr	1/yr
71-55-6	1,1,1-trichloroethane	1.00E-07	3.17E-13	3.97E-04	36,500	513	572		3.01E-02	0.899	0.101	350.6	315.3
75-34-3	1,1-dichloroethane	3.76E-10	1.03E-15	2.26E-05	36,500	560	597	1.83E-03	1.13E-04	0.951	0.049	366.2	348.4
75-35-4	1,1-dichloroethene	5.75E-10	5.61E-16	3.45E-05	36,500	558	625	3.78E-04	1.73E-04	0.943	0.057	383.4	361.8
107-06-2	1,2-dichloroethane	6.35E-10	4.15E-15	3.81E-05	36,500	544	451	7.98E-03	1.91E-04	0.9618	0.038	276.6	266.1
78-87-5	1,2-dichloropropane	1.68E-09	1.32E-14	1.01E-04	36,500	511	518	3.86E-03	5.05E-04	0.956	0.044	317.5	303.5
106-99-0	1,3-butadiene	1.65E-09	1.45E-15	9.90E-05	36,500	679	767	1.57E-04	4.95E-04	0.9569	0.043	470.4	450.2
78-93-3	2-butanone	3.93E-08	4.39E-11	2.36E-03	36,500	541	82	2.63E-01	1.18E-02	0.987	0.013	50.5	49.9
67-64-1	acetone	5.66E-08	1.86E-11	3.39E-03	36,500	584	60	4.11E-01	1.70E-02	0.989	0.0115	36.9	36.5
71-43-2	benzene	1.66E-09	7.67E-15	9.94E-05	36,500	552	589	2.64E-03	4.97E-04	0.946	0.054	361.3	341.7
65-85-0	benzoic acid	1.04E-06	7.10E-09	6.25E-02	36,500	488	5	1.48E+00	3.12E-01	0.988	0.0116	3.0	2.9
100-51-6	benzyl alcohol	2.04E-07	3.06E-09	1.23E-02	36,500	547	1	1.39E-01	6.13E-02	0.980	0.020	0.4	0.4
117-81-7	bis(2-ethylhexyl)-phthalate	4.59E-07	4.15E-08	9.42E-03	36,500	331	0	2.83E-02	1.38E-01	0.013	0.9872	0.1	1.0
75-27-4	bromodichloromethane	3.09E-09	3.71E-12	1.85E-04	36,500	547	506	1.48E-02	9.27E-04	0.950	0.050	310.3	294.8
74-83-9	bromomethane	2.56E-09	9.65E-15	1.54E-04	36,500	601	642	9.00E-03	7.68E-04	0.982	0.0177	394.1	387.1
75-15-0	carbon disulfide	4.59E-08	2.55E-14	2.75E-03	36,500	547	614	6.88E-04	1.38E-02	0.943	0.057	376.8	355.2
56-23-5	carbon tetrachloride	4.81E-09	1.37E-14	2.88E-04	36,500	513	577	1.80E-03	1.44E-03	0.889	0.1113	353.7	314.4
108-90-7	chlorobenzene	3.57E-09	1.10E-13	2.14E-04	36,500	510	531	2.49E-03	1.07E-03	0.848	0.152	325.6	276.3
67-66-3	chloroform	8.00E-09	3.16E-14	4.80E-04	36,500	547	566	4.18E-02	2.40E-03	0.952	0.0482	347.0	330.3
74-87-3	chloromethane	2.05E-09	2.11E-15	1.23E-04	36,500	441	485	5.13E-03	6.15E-04	0.984	0.016	297.5	292.9
542-75-6	cis-1,3-dichloropropene	1.54E-09	2.36E-15	9.22E-05	36,500	547	609	7.11E-04	4.61E-04	0.969	0.0305	373.8	362.4
124-48-1	dibromochloromethane	2.51E-09	3.12E-11	1.51E-04	36,500	547	424	1.85E-02	7.53E-04	0.940	0.060	259.8	244.3
75-71-8	dichlorodifluoromethane	2.93E-09	1.01E-13	1.76E-04	36,500	547	621	8.05E-05	8.78E-04	0.946	0.0543	381.0	360.3
84-74-2	di-n-butyl phthalate	8.40E-07	7.61E-08	5.03E-02	36,500	485	3	1.48E-01	2.52E-01	0.457	0.543	1.9	1.4
100-41-4	ethylbenzene	1.79E-09	4.18E-14	1.07E-04	36,500	483	527	1.48E-03	5.36E-04	0.859	0.1411	323.5	278.0
76-13-1	Freon 113	3.37E-09	8.00E-16	2.02E-04	36,500	448	509	4.45E-05	1.01E-03	0.771	0.229	311.9	240.7
505-60-2	H	3.12E-09	1.33E-13	1.87E-04	36,500	474	47	1.57E-02	9.35E-04	0.843	0.1571	28.5	24.2
110-54-3	hexane	1.71E-09	2.73E-15	1.02E-04	36,500	581	661	1.43E-05	5.12E-04	0.474	0.526	404.9	192.3
75-09-2	methylene chloride	8.07E-09	1.66E-14	4.84E-04	36,500	591	570	5.71E-02	2.42E-03	0.982	0.0184	349.6	343.2
100-42-5	styrene	1.85E-09	1.99E-11	1.11E-04	36,500	489	496	2.90E-03	5.55E-04	0.590	0.410	304.0	179.8
127-18-4	tetrachloroethene	4.00E-09	1.82E-14	2.40E-04	36,500	495	553	6.20E-04	1.20E-03	0.826	0.1735	339.0	280.4
108-88-3	toluene	1.06E-09	1.27E-14	6.38E-05	36,500	507	548	1.10E-03	3.19E-04	0.896	0.104	336.3	301.4
10061-02-6	trans-1,3-dichloropropene	1.96E-09	9.93E-14	1.17E-04	36,500	533	551	3.45E-03	5.87E-04	0.935	0.0652	337.7	315.8
79-01-6	trichloroethene	1.47E-09	1.17E-14	8.82E-05	36,500	522	573	1.15E-03	4.41E-04	0.924	0.076	351.5	325.0
75-69-4	trichlorofluoromethane	1.70E-09	9.18E-16	1.02E-04	36,500	539	610	1.46E-04	5.09E-04	0.912	0.0884	374.2	341.2
75-01-4	vinyl chloride	4.36E-09	1.07E-15	2.62E-04	36,500	606	679	6.51E-04	1.31E-03	0.978	0.022	416.7	407.4
1330-20-7	xylenes	4.29E-09	5.80E-13	2.57E-04	36,500	541	582	4.92E-03	1.29E-03	0.771	0.2289	356.9	275.4
51207-31-9	2,3,7,8-TCDF	6.97E-13	3.77E-13	3.98E-08	36,500	424	23	6.57E-08	2.09E-07	0.003	0.997	9.0	1.0
7487-94-7	mercuric chloride				36,500	396	0			0.002	0.9979	0.0	1.0
7439-97-6	elemental mercury	2.22E-10	4.85E-11	1.33E-05	36,500	949	990	1.41E-03	6.66E-05	0.018	0.982	601.3	11.6

CALCULATIONS FOR ESTIMATING DRINKING WATER AND SEDIMENT CONCENTRATIONS - KENTUCKY RIVER
SDC TECHNOLOGY
(for Noncancer Hazards)

CAS No.	COPC Name	Cs	LR	LE	LT	Cwtot	Cwctot	Cdw	Csb
		mg/kg	g/yr	g/yr	g/yr	g/m^3	mg/L	mg/L	mg/kg
71-55-6	1,1,1-trichloroethane	3.17E-13	2.42E-04	4.40E-08	3.08E-02	2.22E-11	2.03E-11	2.03E-11	1.10E-10
75-34-3	1,1-dichloroethane	1.03E-15	1.44E-06	7.14E-11	1.96E-03	1.29E-12	1.25E-12	1.25E-12	2.68E-12
75-35-4	1,1-dichloroethene	5.61E-16	5.97E-07	5.92E-11	5.85E-04	3.76E-13	3.61E-13	3.61E-13	9.40E-13
107-06-2	1,2-dichloroethane	4.15E-15	6.65E-06	1.92E-10	8.22E-03	6.56E-12	6.43E-12	6.43E-12	9.78E-12
78-87-5	1,2-dichloropropane	1.32E-14	1.59E-05	1.18E-09	4.49E-03	3.27E-12	3.18E-12	3.18E-12	5.98E-12
106-99-0	1,3-butadiene	1.45E-15	6.69E-07	2.48E-10	7.51E-04	4.06E-13	3.96E-13	3.96E-13	7.12E-13
78-93-3	2-butanone	4.39E-11	2.79E-02	6.69E-06	3.05E-01	5.47E-10	5.50E-10	5.50E-10	4.40E-11
67-64-1	acetone	1.86E-11	2.28E-02	1.64E-06	4.54E-01	8.82E-10	8.89E-10	8.89E-10	1.78E-11
71-43-2	benzene	7.67E-15	8.17E-06	8.09E-10	3.25E-03	2.18E-12	2.10E-12	2.10E-12	5.18E-12
65-85-0	benzoic acid	7.10E-09	1.38E+01	6.81E-05	1.56E+01	3.85E-08	3.88E-08	3.88E-08	9.31E-10
100-51-6	benzyl alcohol	3.06E-09	3.25E+00	3.22E-04	3.47E+00	8.81E-09	8.80E-09	8.80E-09	4.22E-09
117-81-7	bis(2-ethylhexyl)-phthalate	4.15E-08	4.87E-06	9.24E-03	1.85E-01	2.21E-08	2.89E-10	2.67E-10	1.19E-06
75-27-4	bromodichloromethane	3.71E-12	4.11E-03	3.73E-07	2.00E-02	1.49E-11	1.45E-11	1.45E-11	3.20E-11
74-83-9	bromomethane	9.65E-15	1.17E-05	8.66E-10	9.94E-03	6.00E-12	6.01E-12	6.01E-12	2.16E-12
75-15-0	carbon disulfide	2.55E-14	3.06E-05	2.30E-09	1.72E-02	1.12E-11	1.08E-11	1.08E-11	2.86E-11
56-23-5	carbon tetrachloride	1.37E-14	7.64E-06	2.21E-09	3.54E-03	2.57E-12	2.32E-12	2.32E-12	1.41E-11
108-90-7	chlorobenzene	1.10E-13	5.20E-05	1.89E-08	3.83E-03	3.09E-12	2.67E-12	2.67E-12	2.39E-11
67-66-3	chloroform	3.16E-14	4.00E-05	2.64E-09	4.47E-02	3.07E-11	2.97E-11	2.97E-11	6.24E-11
74-87-3	chloromethane	2.11E-15	2.94E-06	1.46E-10	5.88E-03	4.36E-12	4.37E-12	4.37E-12	1.09E-12
542-75-6	cis-1,3-dichloropropene	2.36E-15	2.84E-06	2.13E-10	1.27E-03	8.07E-13	7.97E-13	7.97E-13	8.61E-13
124-48-1	dibromochloromethane	3.12E-11	1.01E-02	5.83E-06	2.96E-02	2.52E-11	2.41E-11	2.41E-11	6.76E-11
75-71-8	dichlorodifluoromethane	1.01E-13	3.60E-05	1.84E-08	1.17E-03	7.54E-13	7.26E-13	7.26E-13	1.79E-12
84-74-2	di-n-butyl phthalate	7.61E-08	3.95E-03	1.69E-02	4.71E-01	2.51E-09	1.17E-09	1.17E-09	7.34E-08
100-41-4	ethylbenzene	4.18E-14	1.31E-05	7.87E-09	2.14E-03	1.71E-12	1.50E-12	1.50E-12	1.22E-11
76-13-1	Freon 113	8.00E-16	5.47E-08	1.72E-10	1.26E-03	1.15E-12	9.03E-13	9.03E-13	1.38E-11
505-60-2	H	1.33E-13	1.45E-05	2.81E-08	1.68E-02	4.04E-11	3.47E-11	3.47E-11	3.24E-10
110-54-3	hexane	2.73E-15	4.97E-08	6.02E-10	6.28E-04	7.70E-13	3.71E-13	3.71E-13	2.18E-11
75-09-2	methylene chloride	1.66E-14	2.84E-05	5.63E-10	6.00E-02	3.97E-11	3.97E-11	3.97E-11	1.59E-11
100-42-5	styrene	1.99E-11	4.46E-05	4.42E-06	3.62E-03	4.40E-12	2.64E-12	2.64E-12	9.64E-11
127-18-4	tetrachloroethene	1.82E-14	1.11E-05	2.83E-09	2.07E-03	1.66E-12	1.40E-12	1.40E-12	1.48E-11
108-88-3	toluene	1.27E-14	6.93E-06	2.06E-09	1.49E-03	1.11E-12	1.01E-12	1.01E-12	5.67E-12
10061-02-6	trans-1,3-dichloropropene	9.93E-14	2.93E-05	1.89E-08	4.19E-03	2.98E-12	2.84E-12	2.84E-12	8.86E-12
79-01-6	trichloroethene	1.17E-14	6.80E-06	1.85E-09	1.69E-03	1.18E-12	1.11E-12	1.11E-12	4.19E-12
75-69-4	trichlorofluoromethane	9.18E-16	6.63E-07	1.31E-10	7.57E-04	5.13E-13	4.76E-13	4.76E-13	2.18E-12
75-01-4	vinyl chloride	1.07E-15	1.70E-06	5.19E-11	2.22E-03	1.29E-12	1.29E-12	1.29E-12	7.99E-13
1330-20-7	xylenes	5.80E-13	3.97E-05	1.25E-07	6.51E-03	5.39E-12	4.24E-12	4.23E-12	6.45E-11
51207-31-9	2,3,7,8-TCDF	3.77E-13	1.31E-08	8.40E-08	4.12E-07	9.32E-14	2.57E-16	1.63E-16	5.05E-12
7487-94-7	mercuric chloride	0.00E+00	0.00E+00	0.00E+00	0.00E+00	0.00E+00	0.00E+00	0.00E+00	0.00E+00
7439-97-6	elemental mercury	4.85E-11	1.31E-05	3.60E-06	1.51E-03	3.36E-11	6.04E-13	5.98E-13	1.79E-09

CALCULATIONS FOR ESTIMATING DRINKING WATER AND SEDIMENT CONCENTRATIONS - KENTUCKY RIVER
SDC TECHNOLOGY
(for Cancer Risks)

CAS No.	COPC Name	Cs mg/kg	LR g/yr	LE g/yr	LT g/yr	Cwtot g/m^3	Cwctot mg/L	Cdw mg/L	Csb mg/kg
71-55-6	1,1,1-trichloroethane	3.17E-13	2.42E-04	4.40E-08	3.08E-02	2.22E-11	2.03E-11	2.03E-11	1.10E-10
75-34-3	1,1-dichloroethane	1.03E-15	1.44E-06	7.14E-11	1.96E-03	1.29E-12	1.25E-12	1.25E-12	2.68E-12
75-35-4	1,1-dichloroethene	5.61E-16	5.97E-07	5.92E-11	5.85E-04	3.76E-13	3.61E-13	3.61E-13	9.40E-13
107-06-2	1,2-dichloroethane	4.15E-15	6.65E-06	1.92E-10	8.22E-03	6.56E-12	6.43E-12	6.43E-12	9.78E-12
78-87-5	1,2-dichloropropane	1.32E-14	1.59E-05	1.18E-09	4.49E-03	3.27E-12	3.18E-12	3.18E-12	5.98E-12
106-99-0	1,3-butadiene	1.45E-15	6.69E-07	2.48E-10	7.51E-04	4.06E-13	3.96E-13	3.96E-13	7.12E-13
78-93-3	2-butanone	4.38E-11	2.79E-02	6.68E-06	3.05E-01	5.47E-10	5.50E-10	5.50E-10	4.40E-11
67-64-1	acetone	1.86E-11	2.28E-02	1.64E-06	4.54E-01	8.82E-10	8.89E-10	8.89E-10	1.78E-11
71-43-2	benzene	7.67E-15	8.17E-06	8.09E-10	3.25E-03	2.18E-12	2.10E-12	2.10E-12	5.18E-12
65-85-0	benzoic acid	7.02E-09	1.36E+01	6.73E-05	1.54E+01	3.81E-08	3.84E-08	3.84E-08	9.21E-10
100-51-6	benzyl alcohol	2.97E-09	3.16E+00	3.13E-04	3.38E+00	8.59E-09	8.57E-09	8.57E-09	4.12E-09
117-81-7	bis(2-ethylhexyl)-phthalate	3.47E-08	4.07E-06	7.73E-03	1.83E-01	2.19E-08	2.87E-10	2.65E-10	1.18E-06
75-27-4	bromodichloromethane	3.70E-12	4.10E-03	3.72E-07	2.00E-02	1.49E-11	1.45E-11	1.45E-11	3.20E-11
74-83-9	bromomethane	9.65E-15	1.17E-05	8.66E-10	9.94E-03	6.00E-12	6.01E-12	6.01E-12	2.16E-12
75-15-0	carbon disulfide	2.55E-14	3.06E-05	2.30E-09	1.72E-02	1.12E-11	1.08E-11	1.08E-11	2.86E-11
56-23-5	carbon tetrachloride	1.37E-14	7.64E-06	2.21E-09	3.54E-03	2.57E-12	2.32E-12	2.32E-12	1.41E-11
108-90-7	chlorobenzene	1.10E-13	5.20E-05	1.89E-08	3.83E-03	3.09E-12	2.67E-12	2.67E-12	2.39E-11
67-66-3	chloroform	3.16E-14	4.00E-05	2.64E-09	4.47E-02	3.07E-11	2.97E-11	2.97E-11	6.24E-11
74-87-3	chloromethane	2.11E-15	2.94E-06	1.46E-10	5.88E-03	4.36E-12	4.37E-12	4.37E-12	1.09E-12
542-75-6	cis-1,3-dichloropropene	2.36E-15	2.84E-06	2.13E-10	1.27E-03	8.07E-13	7.97E-13	7.97E-13	8.61E-13
124-48-1	dibromochloromethane	3.05E-11	9.87E-03	5.70E-06	2.93E-02	2.50E-11	2.40E-11	2.39E-11	6.71E-11
75-71-8	dichlorodifluoromethane	1.01E-13	3.60E-05	1.84E-08	1.17E-03	7.54E-13	7.26E-13	7.26E-13	1.79E-12
84-74-2	di-n-butyl phthalate	6.36E-08	3.30E-03	1.42E-02	4.68E-01	2.50E-09	1.16E-09	1.16E-09	7.29E-08
100-41-4	ethylbenzene	4.18E-14	1.31E-05	7.87E-09	2.14E-03	1.71E-12	1.50E-12	1.50E-12	1.22E-11
76-13-1	Freon 113	8.00E-16	5.47E-08	1.72E-10	1.26E-03	1.15E-12	9.03E-13	9.03E-13	1.38E-11
505-60-2	H	1.33E-13	1.45E-05	2.80E-08	1.68E-02	4.04E-11	3.47E-11	3.47E-11	3.24E-10
110-54-3	hexane	2.73E-15	4.97E-08	6.02E-10	6.28E-04	7.70E-13	3.71E-13	3.71E-13	2.18E-11
75-09-2	methylene chloride	1.66E-14	2.84E-05	5.63E-10	6.00E-02	3.97E-11	3.97E-11	3.97E-11	1.59E-11
100-42-5	styrene	1.95E-11	4.38E-05	4.33E-06	3.62E-03	4.40E-12	2.64E-12	2.64E-12	9.64E-11
127-18-4	tetrachloroethene	1.82E-14	1.11E-05	2.83E-09	2.07E-03	1.66E-12	1.40E-12	1.40E-12	1.48E-11
108-88-3	toluene	1.27E-14	6.93E-06	2.06E-09	1.49E-03	1.11E-12	1.01E-12	1.01E-12	5.67E-12
10061-02-6	trans-1,3-dichloropropene	9.93E-14	2.93E-05	1.89E-08	4.19E-03	2.98E-12	2.84E-12	2.84E-12	8.86E-12
79-01-6	trichloroethene	1.17E-14	6.80E-06	1.85E-09	1.69E-03	1.18E-12	1.11E-12	1.11E-12	4.19E-12
75-69-4	trichlorofluoromethane	9.18E-16	6.63E-07	1.31E-10	7.57E-04	5.13E-13	4.76E-13	4.76E-13	2.18E-12
75-01-4	vinyl chloride	1.07E-15	1.70E-06	5.19E-11	2.22E-03	1.29E-12	1.29E-12	1.29E-12	7.99E-13
1330-20-7	xylenes	5.80E-13	3.97E-05	1.25E-07	6.51E-03	5.39E-12	4.24E-12	4.23E-12	6.45E-11
51207-31-9	2,3,7,8-TCDF	1.89E-13	6.57E-09	4.21E-08	3.63E-07	8.23E-14	2.27E-16	1.44E-16	4.46E-12
7487-94-7	mercuric chloride	0.00E+00	0.00E+00	0.00E+00	0.00E+00	0.00E+00	0.00E+00	0.00E+00	0.00E+00
7439-97-6	elemental mercury	3.26E-11	8.80E-06	2.42E-06	1.50E-03	3.35E-11	6.02E-13	5.96E-13	1.79E-09

CALCULATIONS FOR ESTIMATING DRINKING WATER AND SEDIMENT CONCENTRATIONS - KENTUCKY RIVER
SDC TECHNOLOGY
(for Cancer Risks - Exposure Duration > 30 years)

CAS No.	COPC Name	Cs	LR	LE	LT	Cwtot	Cwctot	Cdw	Csb
		mg/kg	g/yr	g/yr	g/yr	g/m^3	mg/L	mg/L	mg/kg
71-55-6	1,1,1-trichloroethane	4.33E-15	3.31E-06	6.00E-10	3.05E-02	2.20E-11	2.02E-11	2.02E-11	1.09E-10
75-34-3	1,1-dichloroethane	1.41E-17	1.97E-08	9.75E-13	1.96E-03	1.29E-12	1.25E-12	1.25E-12	2.68E-12
75-35-4	1,1-dichloroethene	7.66E-18	8.16E-09	8.08E-13	5.85E-04	3.76E-13	3.61E-13	3.61E-13	9.39E-13
107-06-2	1,2-dichloroethane	5.66E-17	9.07E-08	2.62E-12	8.21E-03	6.56E-12	6.43E-12	6.43E-12	9.77E-12
78-87-5	1,2-dichloropropane	1.80E-16	2.17E-07	1.61E-11	4.47E-03	3.26E-12	3.17E-12	3.17E-12	5.96E-12
106-99-0	1,3-butadiene	1.97E-17	9.13E-09	3.39E-12	7.51E-04	4.06E-13	3.95E-13	3.95E-13	7.12E-13
78-93-3	2-butanone	5.99E-13	3.82E-04	9.13E-08	2.77E-01	4.97E-10	5.00E-10	5.00E-10	4.00E-11
67-64-1	acetone	2.55E-13	3.12E-04	2.24E-08	4.31E-01	8.39E-10	8.45E-10	8.45E-10	1.69E-11
71-43-2	benzene	1.05E-16	1.12E-07	1.10E-11	3.24E-03	2.17E-12	2.09E-12	2.09E-12	5.17E-12
65-85-0	benzoic acid	9.70E-11	1.88E-01	9.30E-07	2.04E+00	5.03E-09	5.07E-09	5.07E-09	1.22E-10
100-51-6	benzyl alcohol	4.17E-11	4.44E-02	4.40E-06	2.57E-01	6.53E-10	6.52E-10	6.52E-10	3.13E-10
117-81-7	bis(2-ethylhexyl)-phthalate	5.68E-10	6.66E-08	1.26E-04	1.76E-01	2.10E-08	2.75E-10	2.54E-10	1.13E-06
75-27-4	bromodichloromethane	5.06E-14	5.61E-05	5.09E-09	1.60E-02	1.19E-11	1.15E-11	1.15E-11	2.55E-11
74-83-9	bromomethane	1.32E-16	1.59E-07	1.18E-11	9.92E-03	6.00E-12	6.00E-12	6.00E-12	2.16E-12
75-15-0	carbon disulfide	3.48E-16	4.18E-07	3.14E-11	1.72E-02	1.12E-11	1.08E-11	1.08E-11	2.85E-11
56-23-5	carbon tetrachloride	1.87E-16	1.04E-07	3.01E-11	3.53E-03	2.56E-12	2.32E-12	2.32E-12	1.41E-11
108-90-7	chlorobenzene	1.51E-15	7.09E-07	2.58E-10	3.78E-03	3.05E-12	2.63E-12	2.63E-12	2.36E-11
67-66-3	chloroform	4.32E-16	5.46E-07	3.61E-11	4.47E-02	3.06E-11	2.97E-11	2.97E-11	6.24E-11
74-87-3	chloromethane	2.88E-17	4.01E-08	1.99E-12	5.87E-03	4.35E-12	4.37E-12	4.37E-12	1.09E-12
542-75-6	cis-1,3-dichloropropene	3.22E-17	3.88E-08	2.91E-12	1.26E-03	8.05E-13	7.95E-13	7.95E-13	8.59E-13
124-48-1	dibromochloromethane	4.26E-13	1.38E-04	7.96E-08	1.96E-02	1.67E-11	1.60E-11	1.60E-11	4.48E-11
75-71-8	dichlorodifluoromethane	1.37E-15	4.92E-07	2.52E-10	1.14E-03	7.31E-13	7.04E-13	7.04E-13	1.73E-12
84-74-2	di-n-butyl phthalate	1.04E-09	5.40E-05	2.32E-04	4.51E-01	2.40E-09	1.12E-09	1.12E-09	7.02E-08
100-41-4	ethylbenzene	5.71E-16	1.78E-07	1.08E-10	2.12E-03	1.70E-12	1.49E-12	1.49E-12	1.21E-11
76-13-1	Freon 113	1.09E-17	7.47E-10	2.35E-12	1.26E-03	1.15E-12	9.03E-13	9.03E-13	1.38E-11
505-60-2	H	1.82E-15	1.98E-07	3.83E-10	1.68E-02	4.04E-11	3.47E-11	3.47E-11	3.24E-10
110-54-3	hexane	3.73E-17	6.79E-10	8.22E-12	6.28E-04	7.70E-13	3.71E-13	3.71E-13	2.18E-11
75-09-2	methylene chloride	2.26E-16	3.88E-07	7.69E-12	6.00E-02	3.97E-11	3.97E-11	3.97E-11	1.59E-11
100-42-5	styrene	2.71E-13	6.09E-07	6.04E-08	3.57E-03	4.34E-12	2.61E-12	2.61E-12	9.51E-11
127-18-4	tetrachloroethene	2.48E-16	1.51E-07	3.87E-11	2.06E-03	1.65E-12	1.39E-12	1.39E-12	1.48E-11
108-88-3	toluene	1.73E-16	9.47E-08	2.81E-11	1.48E-03	1.10E-12	1.01E-12	1.01E-12	5.64E-12
10061-02-6	trans-1,3-dichloropropene	1.36E-15	4.00E-07	2.58E-10	4.16E-03	2.96E-12	2.82E-12	2.82E-12	8.80E-12
79-01-6	trichloroethene	1.60E-16	9.29E-08	2.53E-11	1.68E-03	1.18E-12	1.11E-12	1.11E-12	4.17E-12
75-69-4	trichlorofluoromethane	1.25E-17	9.06E-09	1.79E-12	7.57E-04	5.12E-13	4.76E-13	4.76E-13	2.17E-12
75-01-4	vinyl chloride	1.47E-17	2.32E-08	7.09E-13	2.22E-03	1.29E-12	1.29E-12	1.29E-12	7.98E-13
1330-20-7	xylenes	7.92E-15	5.42E-07	1.70E-09	6.47E-03	5.36E-12	4.21E-12	4.21E-12	6.42E-11
51207-31-9	2,3,7,8-TCDF	2.06E-13	7.15E-09	4.58E-08	3.68E-07	8.33E-14	2.30E-16	1.45E-16	4.51E-12
7487-94-7	mercuric chloride	0.00E+00	0.00E+00	0.00E+00	0.00E+00	0.00E+00	0.00E+00	0.00E+00	0.00E+00
7439-97-6	elemental mercury	7.42E-13	2.00E-07	5.51E-08	1.49E-03	3.32E-11	5.97E-13	5.91E-13	1.77E-09

CALCULATIONS FOR LAND BASED MEDIA CONCENTRATIONS
SDC TECHNOLOGY
"Rmax"

CAS No.	COPC Name	Ca µg/m^3	Ds mg/kg/yr	CstD mg/kg	Pd_ag mg/kg	Pv_ag mg/kg
71-55-6	1,1,1-trichloroethane	7.28E-07	1.00E-07	3.17E-13	2.76E-08	
75-34-3	1,1-dichloroethane	3.50E-07	3.76E-10	1.03E-15		9.05E-22
75-35-4	1,1-dichloroethene	3.21E-07	5.75E-10	5.61E-16		3.43E-22
107-06-2	1,2-dichloroethane	3.55E-07	6.35E-10	4.15E-15		2.55E-19
78-87-5	1,2-dichloropropane	4.27E-07	1.68E-09	1.32E-14		4.40E-21
106-99-0	1,3-butadiene	3.07E-07	1.65E-09	1.45E-15	2.46E-18	1.23E-19
78-93-3	2-butanone	3.66E-06	3.93E-08	4.39E-11		2.43E-17
67-64-1	acetone	5.44E-06	5.66E-08	1.86E-11		2.11E-17
71-43-2	benzene	5.14E-07	1.66E-09	7.67E-15		4.07E-21
65-85-0	benzoic acid	1.79E-05	1.04E-06	7.10E-09		5.54E-15
100-51-6	benzyl alcohol	1.67E-06	2.04E-07	3.06E-09		6.24E-15
117-81-7	bis(2-ethylhexyl)-phthalate	2.69E-06	4.59E-07	4.15E-08	8.88E-08	1.26E-12
75-27-4	bromodichloromethane	9.59E-07	3.09E-09	3.71E-12		4.96E-20
74-83-9	bromomethane	1.79E-06	2.56E-09	9.65E-15		4.75E-19
75-15-0	carbon disulfide	6.87E-07	4.59E-08	2.55E-14		1.75E-21
56-23-5	carbon tetrachloride	1.92E-06	4.81E-09	1.37E-14		5.90E-20
108-90-7	chlorobenzene	3.55E-07	3.57E-09	1.10E-13		1.64E-20
67-66-3	chloroform	5.59E-06	8.00E-09	3.16E-14		5.70E-19
74-87-3	chloromethane	1.91E-06	2.05E-09	2.11E-15		1.92E-19
542-75-6	cis-1,3-dichloropropene	4.29E-07	1.54E-09	2.36E-15		2.59E-20
124-48-1	dibromochloromethane	7.01E-07	2.51E-09	3.12E-11		7.44E-20
75-71-8	dichlorodifluoromethane	9.09E-07	2.93E-09	1.01E-13		2.40E-22
84-74-2	di-n-butyl phthalate	1.81E-06	8.40E-07	7.61E-08	4.27E-10	9.64E-14
100-41-4	ethylbenzene	4.53E-07	1.79E-09	4.18E-14		2.61E-20
76-13-1	Freon 113	9.40E-07	3.37E-09	8.00E-16	4.75E-17	1.38E-17
505-60-2	H	2.07E-07	3.12E-09	1.33E-13	3.30E-14	2.40E-19
110-54-3	hexane	7.94E-07	1.71E-09	2.73E-15	8.82E-17	
75-09-2	methylene chloride	4.51E-06	8.07E-09	1.66E-14		1.12E-17
100-42-5	styrene	3.23E-07	1.85E-09	1.99E-11		3.03E-20
127-18-4	tetrachloroethene	4.13E-07	4.00E-09	1.82E-14		1.99E-20
108-88-3	toluene	2.70E-07	1.06E-09	1.27E-14		4.15E-21
10061-02-6	trans-1,3-dichloropropene	4.55E-07	1.96E-09	9.93E-14	2.33E-16	7.98E-21
79-01-6	trichloroethene	4.11E-07	1.47E-09	1.17E-14		3.03E-21
75-69-4	trichlorofluoromethane	4.74E-07	1.70E-09	9.18E-16		5.33E-22
75-01-4	vinyl chloride	5.30E-07	4.36E-09	1.07E-15		1.61E-20
1330-20-7	xylenes	1.09E-06	4.29E-09	5.80E-13	1.02E-15	2.07E-19
51207-31-9	2,3,7,8-TCDF	1.10E-12	6.97E-13	3.77E-13	1.00E-14	3.98E-25
7487-94-7	mercuric chloride					
7439-97-6	elemental mercury	2.07E-07	2.22E-10	4.85E-11		

CALCULATIONS FOR LAND BASED MEDIA CONCENTRATIONS
SDC TECHNOLOGY
("Rmax" for Noncancer Hazards)

CAS No.	COPC Name	Cs mg/kg	Pr_ag mg/kg	Pag mg/kg	Pr_bg mg/kg
71-55-6	1,1,1-trichloroethane	3.17E-13	4.41E-13	2.76E-08	2.82E-13
75-34-3	1,1-dichloroethane	1.03E-15	3.65E-15	3.65E-15	1.95E-15
75-35-4	1,1-dichloroethene	5.61E-16	1.33E-15	1.33E-15	4.49E-16
107-06-2	1,2-dichloroethane	4.15E-15	2.18E-14	2.18E-14	1.14E-12
78-87-5	1,2-dichloropropane	1.32E-14	3.55E-14	3.55E-14	1.22E-14
106-99-0	1,3-butadiene	1.45E-15	3.96E-15	3.96E-15	6.00E-17
78-93-3	2-butanone	4.39E-11	3.68E-10	3.68E-10	1.01E-09
67-64-1	acetone	1.86E-11	1.56E-10	1.56E-10	1.38E-09
71-43-2	benzene	7.67E-15	1.82E-14	1.82E-14	6.14E-15
65-85-0	benzoic acid	7.10E-09	2.28E-08	2.28E-08	1.50E-07
100-51-6	benzyl alcohol	3.06E-09	2.56E-08	2.56E-08	2.01E-07
117-81-7	bis(2-ethylhexyl)-phthalate	4.15E-08	1.81E-09	9.06E-08	3.54E-13
75-27-4	bromodichloromethane	3.71E-12	8.78E-12	8.78E-12	3.24E-12
74-83-9	bromomethane	9.65E-15	7.67E-14	7.67E-14	8.82E-13
75-15-0	carbon disulfide	2.55E-14	5.27E-14	5.27E-14	3.21E-14
56-23-5	carbon tetrachloride	1.37E-14	1.28E-14	1.28E-14	1.30E-14
108-90-7	chlorobenzene	1.10E-13	1.03E-13	1.03E-13	8.35E-14
67-66-3	chloroform	3.16E-14	8.54E-14	8.54E-14	3.20E-14
74-87-3	chloromethane	2.11E-15	1.76E-14	1.76E-14	2.51E-13
542-75-6	cis-1,3-dichloropropene	2.36E-15	1.09E-14	1.09E-14	2.67E-13
124-48-1	dibromochloromethane	3.12E-11	6.21E-11	6.21E-11	5.40E-12
75-71-8	dichlorodifluoromethane	1.01E-13	2.20E-13	2.20E-13	1.75E-14
84-74-2	di-n-butyl phthalate	7.61E-08	5.63E-09	6.06E-09	1.42E-10
100-41-4	ethylbenzene	4.18E-14	2.61E-14	2.61E-14	3.25E-14
76-13-1	Freon 113	8.00E-16	4.64E-16	5.25E-16	1.85E-17
505-60-2	H	1.33E-13	2.09E-13	2.42E-13	1.21E-15
110-54-3	hexane	2.73E-15	6.01E-16	6.89E-16	5.65E-17
75-09-2	methylene chloride	1.66E-14	1.14E-13	1.14E-13	5.95E-12
100-42-5	styrene	1.99E-11	1.42E-11	1.42E-11	7.85E-14
127-18-4	tetrachloroethene	1.82E-14	7.64E-15	7.64E-15	5.66E-14
108-88-3	toluene	1.27E-14	1.36E-14	1.36E-14	9.81E-15
10061-02-6	trans-1,3-dichloropropene	9.93E-14	1.83E-13	1.83E-13	2.27E-15
79-01-6	trichloroethene	1.17E-14	1.86E-14	1.86E-14	5.79E-15
75-69-4	trichlorofluoromethane	9.18E-16	1.28E-15	1.28E-15	7.47E-16
75-01-4	vinyl chloride	1.07E-15	6.45E-15	6.45E-15	2.64E-13
1330-20-7	xylenes	5.80E-13	3.35E-13	3.36E-13	1.34E-14
51207-31-9	2,3,7,8-TCDF	3.77E-13	4.34E-15	1.44E-14	5.62E-15
7487-94-7	mercuric chloride	0.00E+00	0.00E+00	0.00E+00	0.00E+00
7439-97-6	elemental mercury	4.85E-11	0.00E+00	0.00E+00	0.00E+00

CALCULATIONS FOR LAND BASED MEDIA CONCENTRATIONS
SDC TECHNOLOGY
("Rmax" for Cancer Risks)

CAS No.	COPC Name	Cs	Pr_ag	Pag	Pr_bg
		mg/kg	mg/kg	mg/kg	mg/kg
71-55-6	1,1,1-trichloroethane	3.17E-13	4.41E-13	2.76E-08	2.82E-13
75-34-3	1,1-dichloroethane	1.03E-15	3.65E-15	3.65E-15	1.95E-15
75-35-4	1,1-dichloroethene	5.61E-16	1.33E-15	1.33E-15	4.49E-16
107-06-2	1,2-dichloroethane	4.15E-15	2.18E-14	2.18E-14	1.14E-12
78-87-5	1,2-dichloropropane	1.32E-14	3.55E-14	3.55E-14	1.22E-14
106-99-0	1,3-butadiene	1.45E-15	3.96E-15	3.96E-15	6.00E-17
78-93-3	2-butanone	4.38E-11	3.67E-10	3.67E-10	1.01E-09
67-64-1	acetone	1.86E-11	1.56E-10	1.56E-10	1.38E-09
71-43-2	benzene	7.67E-15	1.82E-14	1.82E-14	6.14E-15
65-85-0	benzoic acid	7.02E-09	2.25E-08	2.25E-08	1.49E-07
100-51-6	benzyl alcohol	2.97E-09	2.49E-08	2.49E-08	1.96E-07
117-81-7	bis(2-ethylhexyl)-phthalate	3.47E-08	1.52E-09	9.03E-08	2.97E-13
75-27-4	bromodichloromethane	3.70E-12	8.76E-12	8.76E-12	3.23E-12
74-83-9	bromomethane	9.65E-15	7.67E-14	7.67E-14	8.82E-13
75-15-0	carbon disulfide	2.55E-14	5.27E-14	5.27E-14	3.21E-14
56-23-5	carbon tetrachloride	1.37E-14	1.28E-14	1.28E-14	1.30E-14
108-90-7	chlorobenzene	1.10E-13	1.03E-13	1.03E-13	8.35E-14
67-66-3	chloroform	3.16E-14	8.54E-14	8.54E-14	3.20E-14
74-87-3	chloromethane	2.11E-15	1.76E-14	1.76E-14	2.51E-13
542-75-6	cis-1,3-dichloropropene	2.36E-15	1.09E-14	1.09E-14	2.67E-13
124-48-1	dibromochloromethane	3.05E-11	6.06E-11	6.06E-11	5.27E-12
75-71-8	dichlorodifluoromethane	1.01E-13	2.20E-13	2.20E-13	1.75E-14
84-74-2	di-n-butyl phthalate	6.36E-08	4.71E-09	5.14E-09	1.18E-10
100-41-4	ethylbenzene	4.18E-14	2.61E-14	2.61E-14	3.25E-14
76-13-1	Freon 113	8.00E-16	4.64E-16	5.25E-16	1.85E-17
505-60-2	H	1.33E-13	2.09E-13	2.42E-13	1.21E-15
110-54-3	hexane	2.73E-15	6.01E-16	6.89E-16	5.65E-17
75-09-2	methylene chloride	1.66E-14	1.14E-13	1.14E-13	5.95E-12
100-42-5	styrene	1.95E-11	1.39E-11	1.39E-11	7.70E-14
127-18-4	tetrachloroethene	1.82E-14	7.64E-15	7.64E-15	5.66E-14
108-88-3	toluene	1.27E-14	1.36E-14	1.36E-14	9.81E-15
10061-02-6	trans-1,3-dichloropropene	9.93E-14	1.83E-13	1.83E-13	2.27E-15
79-01-6	trichloroethene	1.17E-14	1.86E-14	1.86E-14	5.79E-15
75-69-4	trichlorofluoromethane	9.18E-16	1.28E-15	1.28E-15	7.47E-16
75-01-4	vinyl chloride	1.07E-15	6.45E-15	6.45E-15	2.64E-13
1330-20-7	xylenes	5.80E-13	3.35E-13	3.36E-13	1.34E-14
51207-31-9	2,3,7,8-TCDF	1.89E-13	2.18E-15	1.22E-14	2.82E-15
7487-94-7	mercuric chloride	0.00E+00	0.00E+00	0.00E+00	0.00E+00
7439-97-6	elemental mercury	3.26E-11	0.00E+00	0.00E+00	0.00E+00

CALCULATIONS FOR LAND BASED MEDIA CONCENTRATIONS
SDC TECHNOLOGY
("Fmax")

CAS No.	COPC Name	Ca	Ds	CstD	Pd_ag	Pd_f	Pd_s	Pv_ag	Pv_f	Pv_s
		µg/m^3	mg/kg/yr	mg/kg	mg/kg	mg/kg	mg/kg	mg/kg	mg/kg	mg/kg
71-55-6	1,1,1-trichloroethane	7.28E-07	1.00E-07	3.17E-13	2.76E-08	3.09E-07	9.10E-08			
75-34-3	1,1-dichloroethane	3.50E-07	3.76E-10	1.03E-15				2.41E-15	2.41E-13	1.20E-13
75-35-4	1,1-dichloroethene	3.21E-07	5.75E-10	5.61E-16				9.93E-16	9.93E-14	4.97E-14
107-06-2	1,2-dichloroethane	3.55E-07	6.35E-10	4.15E-15				6.68E-13	6.68E-13	3.34E-13
78-87-5	1,2-dichloropropane	4.27E-07	1.68E-09	1.32E-14				9.58E-15	9.58E-13	4.79E-13
106-99-0	1,3-butadiene	3.07E-07	1.65E-09	1.45E-15	2.46E-18	2.76E-17	8.12E-18	3.74E-13	3.74E-11	1.87E-11
78-93-3	2-butanone	3.66E-06	3.93E-08	4.39E-11				6.18E-12	6.18E-12	3.09E-12
67-64-1	acetone	5.44E-06	5.66E-08	1.86E-11				3.61E-12	3.61E-12	1.81E-12
71-43-2	benzene	5.14E-07	1.66E-09	7.67E-15				7.37E-15	7.37E-13	3.68E-13
65-85-0	benzoic acid	1.79E-05	1.04E-06	7.10E-09				2.86E-10	2.86E-08	1.43E-08
100-51-6	benzyl alcohol	1.67E-06	2.04E-07	3.06E-09				3.43E-09	3.43E-09	1.71E-09
117-81-7	bis(2-ethylhexyl)-phthalate	2.69E-06	4.59E-07	4.15E-08	8.88E-08	9.96E-07	2.93E-07	4.29E-07	4.29E-05	2.15E-05
75-27-4	bromodichloromethane	9.59E-07	3.09E-09	3.71E-12				4.81E-14	4.81E-12	2.41E-12
74-83-9	bromomethane	1.79E-06	2.56E-09	9.65E-15				2.47E-13	2.47E-13	1.24E-13
75-15-0	carbon disulfide	6.87E-07	4.59E-08	2.55E-14				2.35E-15	2.35E-13	1.17E-13
56-23-5	carbon tetrachloride	1.92E-06	4.81E-09	1.37E-14				2.86E-14	2.86E-12	1.43E-12
108-90-7	chlorobenzene	3.55E-07	3.57E-09	1.10E-13				4.29E-14	4.29E-12	2.15E-12
67-66-3	chloroform	5.59E-06	8.00E-09	3.16E-14				9.50E-14	9.50E-12	4.75E-12
74-87-3	chloromethane	1.91E-06	2.05E-09	2.11E-15				9.39E-14	9.39E-14	4.69E-14
542-75-6	cis-1,3-dichloropropene	4.29E-07	1.54E-09	2.36E-15				5.62E-14	5.62E-14	2.81E-14
124-48-1	dibromochloromethane	7.01E-07	2.51E-09	3.12E-11				9.87E-14	9.87E-12	4.94E-12
75-71-8	dichlorodifluoromethane	9.09E-07	2.93E-09	1.01E-13				2.46E-16	2.46E-14	1.23E-14
84-74-2	di-n-butyl phthalate	1.81E-06	8.40E-07	7.61E-08	4.27E-10	4.79E-09	1.41E-09	4.70E-08	4.70E-06	2.35E-06
100-41-4	ethylbenzene	4.53E-07	1.79E-09	4.18E-14				5.37E-14	5.37E-12	2.68E-12
76-13-1	Freon 113	9.40E-07	3.37E-09	8.00E-16	4.75E-17	5.33E-16	1.57E-16	1.36E-11	1.36E-09	6.81E-10
505-60-2	H	2.07E-07	3.12E-09	1.33E-13	3.30E-14	3.70E-13	1.09E-13	1.08E-12	1.08E-10	5.38E-11
110-54-3	hexane	7.94E-07	1.71E-09	2.73E-15	8.82E-17	9.89E-16	2.91E-16			
75-09-2	methylene chloride	4.51E-06	8.07E-09	1.66E-14				2.31E-12	2.31E-12	1.16E-12
100-42-5	styrene	3.23E-07	1.85E-09	1.99E-11				8.72E-14	8.72E-12	4.36E-12
127-18-4	tetrachloroethene	4.13E-07	4.00E-09	1.82E-14				4.48E-14	4.48E-12	2.24E-12
108-88-3	toluene	2.70E-07	1.06E-09	1.27E-14				1.43E-14	1.43E-12	7.16E-13
10061-02-6	trans-1,3-dichloropropene	4.55E-07	1.96E-09	9.93E-14	2.33E-16	2.61E-15	7.69E-16	1.63E-14	1.63E-12	8.16E-13
79-01-6	trichloroethene	4.11E-07	1.47E-09	1.17E-14				6.88E-15	6.88E-13	3.44E-13
75-69-4	trichlorofluoromethane	4.74E-07	1.70E-09	9.18E-16				1.05E-15	1.05E-13	5.23E-14
75-01-4	vinyl chloride	5.30E-07	4.36E-09	1.07E-15				2.83E-14	2.83E-14	1.41E-14
1330-20-7	xylenes	1.09E-06	4.29E-09	5.80E-13	1.02E-15	1.15E-14	3.37E-15	1.77E-13	1.77E-11	8.85E-12
51207-31-9	2,3,7,8-TCDF	1.10E-12	6.97E-13	3.77E-13	1.00E-14	1.13E-13	3.31E-14	3.17E-13	3.17E-11	1.58E-11
7487-94-7	mercuric chloride									
7439-97-6	elemental mercury	2.07E-07	2.22E-10	4.85E-11						

CALCULATIONS FOR LAND BASED MEDIA CONCENTRATIONS
SDC TECHNOLOGY
("Fmax" for Noncancer Hazards)

CAS No.	COPC Name	Cs	Pr_ag	Pr_f	Pr_s	Pag	Pr_bg	Pf
		mg/kg	mg/kg	mg/kg	mg/kg	mg/kg	mg/kg	mg/kg
71-55-6	1,1,1-trichloroethane	3.17E-13	4.41E-13	4.41E-13	4.41E-13	2.76E-08	2.82E-13	3.09E-07
75-34-3	1,1-dichloroethane	1.03E-15	3.65E-15	3.65E-15	3.65E-15	6.05E-15	1.95E-15	2.44E-13
75-35-4	1,1-dichloroethene	5.61E-16	1.33E-15	1.33E-15	1.33E-15	2.32E-15	4.49E-16	1.01E-13
107-06-2	1,2-dichloroethane	4.15E-15	2.18E-14	2.18E-14	2.18E-14	6.90E-13	1.14E-12	6.90E-13
78-87-5	1,2-dichloropropane	1.32E-14	3.55E-14	3.55E-14	3.55E-14	4.51E-14	1.22E-14	9.94E-13
106-99-0	1,3-butadiene	1.45E-15	3.96E-15	3.96E-15	3.96E-15	3.78E-13	6.00E-17	3.74E-11
78-93-3	2-butanone	4.39E-11	3.68E-10	3.68E-10	3.68E-10	3.74E-10	1.01E-09	3.74E-10
67-64-1	acetone	1.86E-11	1.56E-10	1.56E-10	1.56E-10	1.60E-10	1.38E-09	1.60E-10
71-43-2	benzene	7.67E-15	1.82E-14	1.82E-14	1.82E-14	2.55E-14	6.14E-15	7.55E-13
65-85-0	benzoic acid	7.10E-09	2.28E-08	2.28E-08	2.28E-08	2.31E-08	1.50E-07	5.14E-08
100-51-6	benzyl alcohol	3.06E-09	2.56E-08	2.56E-08	2.56E-08	2.90E-08	2.01E-07	2.90E-08
117-81-7	bis(2-ethylhexyl)-phthalate	4.15E-08	1.81E-09	1.81E-09	1.81E-09	5.20E-07	3.54E-13	4.39E-05
75-27-4	bromodichloromethane	3.71E-12	8.78E-12	8.78E-12	8.78E-12	8.83E-12	3.24E-12	1.36E-11
74-83-9	bromomethane	9.65E-15	7.67E-14	7.67E-14	7.67E-14	3.24E-13	8.82E-13	3.24E-13
75-15-0	carbon disulfide	2.55E-14	5.27E-14	5.27E-14	5.27E-14	5.51E-14	3.21E-14	2.87E-13
56-23-5	carbon tetrachloride	1.37E-14	1.28E-14	1.28E-14	1.28E-14	4.14E-14	1.30E-14	2.87E-12
108-90-7	chlorobenzene	1.10E-13	1.03E-13	1.03E-13	1.03E-13	1.46E-13	8.35E-14	4.40E-12
67-66-3	chloroform	3.16E-14	8.54E-14	8.54E-14	8.54E-14	1.80E-13	3.20E-14	9.59E-12
74-87-3	chloromethane	2.11E-15	1.76E-14	1.76E-14	1.76E-14	1.12E-13	2.51E-13	1.12E-13
542-75-6	cis-1,3-dichloropropene	2.36E-15	1.09E-14	1.09E-14	1.09E-14	6.70E-14	2.67E-13	6.70E-14
124-48-1	dibromochloromethane	3.12E-11	6.21E-11	6.21E-11	6.21E-11	6.22E-11	5.40E-12	7.19E-11
75-71-8	dichlorodifluoromethane	1.01E-13	2.20E-13	2.20E-13	2.20E-13	2.21E-13	1.75E-14	2.45E-13
84-74-2	di-n-butyl phthalate	7.61E-08	5.63E-09	5.66E-09	5.66E-09	5.31E-08	1.42E-10	4.71E-06
100-41-4	ethylbenzene	4.18E-14	2.61E-14	2.61E-14	2.61E-14	7.98E-14	3.25E-14	5.39E-12
76-13-1	Freon 113	8.00E-16	4.64E-16	4.64E-16	4.64E-16	1.36E-11	1.85E-17	1.36E-09
505-60-2	H	1.33E-13	2.09E-13	2.09E-13	2.09E-13	1.32E-12	1.21E-15	1.08E-10
110-54-3	hexane	2.73E-15	6.01E-16	6.01E-16	6.01E-16	6.89E-16	5.65E-17	1.59E-15
75-09-2	methylene chloride	1.66E-14	1.14E-13	1.14E-13	1.14E-13	2.43E-12	5.95E-12	2.43E-12
100-42-5	styrene	1.99E-11	1.42E-11	1.42E-11	1.42E-11	1.43E-11	7.85E-14	2.29E-11
127-18-4	tetrachloroethene	1.82E-14	7.64E-15	7.64E-15	7.64E-15	5.24E-14	5.66E-14	4.48E-12
108-88-3	toluene	1.27E-14	1.36E-14	1.36E-14	1.36E-14	2.79E-14	9.81E-15	1.44E-12
10061-02-6	trans-1,3-dichloropropene	9.93E-14	1.83E-13	1.83E-13	1.83E-13	1.99E-13	2.27E-15	1.82E-12
79-01-6	trichloroethene	1.17E-14	1.86E-14	1.86E-14	1.86E-14	2.55E-14	5.79E-15	7.06E-13
75-69-4	trichlorofluoromethane	9.18E-16	1.28E-15	1.28E-15	1.28E-15	2.32E-15	7.47E-16	1.06E-13
75-01-4	vinyl chloride	1.07E-15	6.45E-15	6.45E-15	6.45E-15	3.47E-14	2.64E-13	3.47E-14
1330-20-7	xylenes	5.80E-13	3.35E-13	3.35E-13	3.35E-13	5.13E-13	1.34E-14	1.81E-11
51207-31-9	2,3,7,8-TCDF	3.77E-13	4.34E-15	4.34E-15	4.34E-15	3.31E-13	5.62E-15	3.18E-11
7487-94-7	mercuric chloride							
7439-97-6	elemental mercury	4.85E-11						

CALCULATIONS FOR LAND BASED MEDIA CONCENTRATIONS
SDC TECHNOLOGY
("Fmax" for Noncancer Hazards)

CAS No.	COPC Name	Ps mg/kg	Pr_g mg/kg	Abeef mg/kg	Amilk mg/kg	Apork mg/kg	Aegg mg/kg	Achicken mg/kg
71-55-6	1,1,1-trichloroethane	9.10E-08	4.41E-13	1.76E-08	5.58E-09	9.19E-10	2.39E-16	4.18E-16
75-34-3	1,1-dichloroethane	1.24E-13	3.65E-15	5.19E-15	1.66E-15	4.75E-16	6.68E-19	1.17E-18
75-35-4	1,1-dichloroethene	5.10E-14	1.33E-15	3.43E-15	1.10E-15	3.11E-16	3.96E-19	6.94E-19
107-06-2	1,2-dichloroethane	3.56E-13	2.18E-14	8.80E-15	2.83E-15	8.74E-16	2.37E-18	4.14E-18
78-87-5	1,2-dichloropropane	5.15E-13	3.55E-14	2.92E-14	9.37E-15	2.96E-15	9.04E-18	1.58E-17
106-99-0	1,3-butadiene	1.87E-11	3.96E-15	1.07E-12	3.42E-13	9.06E-14	9.89E-19	1.74E-18
78-93-3	2-butanone	3.71E-10	3.68E-10	4.63E-13	1.67E-13	2.22E-13	3.29E-15	5.76E-15
67-64-1	acetone	1.58E-10	1.56E-10	5.39E-14	1.95E-14	2.57E-14	3.81E-16	6.67E-16
71-43-2	benzene	3.87E-13	1.82E-14	2.58E-14	8.27E-15	2.47E-15	5.42E-18	9.48E-18
65-85-0	benzoic acid	3.71E-08	2.28E-08	3.16E-11	1.07E-11	8.87E-12	1.12E-13	1.96E-13
100-51-6	benzyl alcohol	2.73E-08	2.56E-08	2.01E-10	7.20E-11	8.95E-11	1.30E-12	2.28E-12
117-81-7	bis(2-ethylhexyl)-phthalate	2.18E-05	1.81E-09	1.76E-05	5.62E-06	1.47E-06	2.14E-11	3.75E-11
75-27-4	bromodichloromethane	1.12E-11	8.78E-12	5.19E-13	1.80E-13	1.88E-13	2.62E-15	4.58E-15
74-83-9	bromomethane	2.00E-13	7.67E-14	2.41E-15	7.98E-16	4.62E-16	4.66E-18	8.15E-18
75-15-0	carbon disulfide	1.70E-13	5.27E-14	1.17E-14	3.85E-15	2.00E-15	1.83E-17	3.21E-17
56-23-5	carbon tetrachloride	1.44E-12	1.28E-14	2.51E-13	8.02E-14	2.17E-14	1.04E-17	1.82E-17
108-90-7	chlorobenzene	2.25E-12	1.03E-13	3.86E-13	1.24E-13	3.71E-14	8.41E-17	1.47E-16
67-66-3	chloroform	4.84E-12	8.54E-14	2.80E-13	8.96E-14	2.48E-14	2.17E-17	3.80E-17
74-87-3	chloromethane	6.46E-14	1.76E-14	4.70E-16	1.54E-16	7.38E-17	6.14E-19	1.07E-18
542-75-6	cis-1,3-dichloropropene	3.89E-14	1.09E-14	1.04E-15	3.41E-16	1.66E-16	1.41E-18	2.47E-18
124-48-1	dibromochloromethane	6.70E-11	6.21E-11	3.46E-12	1.23E-12	1.54E-12	2.26E-14	3.95E-14
75-71-8	dichlorodifluoromethane	2.33E-13	2.20E-13	1.07E-14	3.81E-15	4.88E-15	7.21E-17	1.26E-16
84-74-2	di-n-butyl phthalate	2.36E-06	5.66E-09	1.72E-06	5.51E-07	1.47E-07	4.30E-11	7.53E-11
100-41-4	ethylbenzene	2.71E-12	2.61E-14	6.59E-13	2.11E-13	5.73E-14	3.14E-17	5.50E-17
76-13-1	Freon 113	6.81E-10	4.64E-16	1.77E-10	5.65E-11	1.49E-11	6.01E-19	1.05E-18
505-60-2	H	5.41E-11	2.09E-13	5.74E-12	1.83E-12	4.90E-13	9.93E-17	1.74E-16
110-54-3	hexane	8.92E-16	6.01E-16	4.34E-16	1.41E-16	1.25E-16	1.84E-17	3.22E-18
75-09-2	methylene chloride	1.27E-12	1.14E-13	2.16E-14	6.93E-15	2.29E-15	8.52E-18	1.49E-17
100-42-5	styrene	1.86E-11	1.42E-11	2.89E-12	9.85E-13	1.06E-12	1.50E-14	2.63E-14
127-18-4	tetrachloroethene	2.25E-12	7.64E-15	7.35E-13	2.35E-13	6.27E-14	1.32E-17	2.32E-17
108-88-3	toluene	7.29E-13	1.36E-14	1.12E-13	3.58E-14	9.97E-15	9.69E-18	1.70E-17
10061-02-6	trans-1,3-dichloropropene	9.99E-13	1.83E-13	8.75E-14	2.69E-14	1.10E-14	7.28E-17	1.27E-16
79-01-6	trichloroethene	3.62E-13	1.86E-14	3.72E-14	1.19E-14	3.61E-15	8.71E-18	1.52E-17
75-69-4	trichlorofluoromethane	5.36E-14	1.28E-15	6.36E-15	2.03E-15	5.74E-16	6.91E-19	1.21E-18
75-01-4	vinyl chloride	2.06E-14	6.45E-15	3.80E-16	1.25E-16	6.44E-17	5.83E-19	1.02E-18
1330-20-7	xylenes	9.19E-12	3.35E-13	2.35E-12	7.54E-13	2.21E-13	4.34E-16	7.60E-16
51207-31-9	2,3,7,8-TCDF	1.59E-11	4.34E-15	1.17E-11	3.72E-12	9.88E-13	1.41E-16	2.46E-16
7487-94-7	mercuric chloride							
7439-97-6	elemental mercury							

CALCULATIONS FOR LAND BASED MEDIA CONCENTRATIONS
SDC TECHNOLOGY
("Fmax" for Child Cancer Risks)

CAS No.	COPC Name	Cs	Pr_ag	Pr_f	Pr_s	Pag	Pr_bg	Pf
		mg/kg	mg/kg	mg/kg	mg/kg	mg/kg	mg/kg	mg/kg
71-55-6	1,1,1-trichloroethane	3.17E-13	4.41E-13	4.41E-13	4.41E-13	2.76E-08	2.82E-13	3.09E-07
75-34-3	1,1-dichloroethane	1.03E-15	3.65E-15	3.65E-15	3.65E-15	6.05E-15	1.95E-15	2.44E-13
75-35-4	1,1-dichloroethene	5.61E-16	1.33E-15	1.33E-15	1.33E-15	2.32E-15	4.49E-16	1.01E-13
107-06-2	1,2-dichloroethane	4.15E-15	2.18E-14	2.18E-14	2.18E-14	6.90E-13	1.14E-12	6.90E-13
78-87-5	1,2-dichloropropane	1.32E-14	3.55E-14	3.55E-14	3.55E-14	4.51E-14	1.22E-14	9.94E-13
106-99-0	1,3-butadiene	1.45E-15	3.96E-15	3.96E-15	3.96E-15	3.78E-13	6.00E-17	3.74E-11
78-93-3	2-butanone	4.38E-11	3.67E-10	3.67E-10	3.67E-10	3.73E-10	1.01E-09	3.73E-10
67-64-1	acetone	1.86E-11	1.56E-10	1.56E-10	1.56E-10	1.60E-10	1.38E-09	1.60E-10
71-43-2	benzene	7.67E-15	1.82E-14	1.82E-14	1.82E-14	2.55E-14	6.14E-15	7.55E-13
65-85-0	benzoic acid	7.02E-09	2.25E-08	2.25E-08	2.25E-08	2.28E-08	1.49E-07	5.11E-08
100-51-6	benzyl alcohol	2.97E-09	2.49E-08	2.49E-08	2.49E-08	2.83E-08	1.96E-07	2.83E-08
117-81-7	bis(2-ethylhexyl)-phthalate	3.47E-08	1.52E-09	1.52E-09	1.52E-09	5.20E-07	2.97E-13	4.39E-05
75-27-4	bromodichloromethane	3.70E-12	8.76E-12	8.76E-12	8.76E-12	8.81E-12	3.23E-12	1.36E-11
74-83-9	bromomethane	9.65E-15	7.67E-14	7.67E-14	7.67E-14	3.24E-13	8.82E-13	3.24E-13
75-15-0	carbon disulfide	2.55E-14	5.27E-14	5.27E-14	5.27E-14	5.51E-14	3.21E-14	2.87E-13
56-23-5	carbon tetrachloride	1.37E-14	1.28E-14	1.28E-14	1.28E-14	4.14E-14	1.30E-14	2.87E-12
108-90-7	chlorobenzene	1.10E-13	1.03E-13	1.03E-13	1.03E-13	1.46E-13	8.35E-14	4.40E-12
67-66-3	chloroform	3.16E-14	8.54E-14	8.54E-14	8.54E-14	1.80E-13	3.20E-14	9.59E-12
74-87-3	chloromethane	2.11E-15	1.76E-14	1.76E-14	1.76E-14	1.12E-13	2.51E-13	1.12E-13
542-75-6	cis-1,3-dichloropropene	2.36E-15	1.09E-14	1.09E-14	1.09E-14	6.70E-14	2.67E-13	6.70E-14
124-48-1	dibromochloromethane	3.05E-11	6.06E-11	6.06E-11	6.06E-11	6.07E-11	5.27E-12	7.05E-11
75-71-8	dichlorodifluoromethane	1.01E-13	2.20E-13	2.20E-13	2.20E-13	2.21E-13	1.75E-14	2.45E-13
84-74-2	di-n-butyl phthalate	6.36E-08	4.71E-09	4.74E-09	4.74E-09	5.22E-08	1.18E-10	4.71E-06
100-41-4	ethylbenzene	4.18E-14	2.61E-14	2.61E-14	2.61E-14	7.98E-14	3.25E-14	5.39E-12
76-13-1	Freon 113	8.00E-16	4.64E-16	4.64E-16	4.64E-16	1.36E-11	1.85E-17	1.36E-09
505-60-2	H	1.33E-13	2.09E-13	2.09E-13	2.09E-13	1.32E-12	1.21E-15	1.08E-10
110-54-3	hexane	2.73E-15	6.01E-16	6.01E-16	6.01E-16	6.89E-16	5.65E-17	1.59E-15
75-09-2	methylene chloride	1.66E-14	1.14E-13	1.14E-13	1.14E-13	2.43E-12	5.95E-12	2.43E-12
100-42-5	styrene	1.95E-11	1.39E-11	1.39E-11	1.39E-11	1.40E-11	7.70E-14	2.26E-11
127-18-4	tetrachloroethene	1.82E-14	7.64E-15	7.64E-15	7.64E-15	5.24E-14	5.66E-14	4.48E-12
108-88-3	toluene	1.27E-14	1.36E-14	1.36E-14	1.36E-14	2.79E-14	9.81E-15	1.44E-12
10061-02-6	trans-1,3-dichloropropene	9.93E-14	1.83E-13	1.83E-13	1.83E-13	1.99E-13	2.27E-15	1.82E-12
79-01-6	trichloroethene	1.17E-14	1.86E-14	1.86E-14	1.86E-14	2.55E-14	5.79E-15	7.06E-13
75-69-4	trichlorofluoromethane	9.18E-16	1.28E-15	1.28E-15	1.28E-15	2.32E-15	7.47E-16	1.06E-13
75-01-4	vinyl chloride	1.07E-15	6.45E-15	6.45E-15	6.45E-15	3.47E-14	2.64E-13	3.47E-14
1330-20-7	xylenes	5.80E-13	3.35E-13	3.35E-13	3.35E-13	5.13E-13	1.34E-14	1.81E-11
51207-31-9	2,3,7,8-TCDF	1.89E-13	2.18E-15	2.18E-15	2.18E-15	3.29E-13	2.82E-15	3.18E-11
7487-94-7	mercuric chloride							
7439-97-6	elemental mercury	3.26E-11						

CALCULATIONS FOR LAND BASED MEDIA CONCENTRATIONS
SDC TECHNOLOGY
("Fmax" for Child Cancer Risks)

CAS No.	COPC Name	Ps	Pr_g	Abeef	Amilk	Apork	Aegg	Achicken
		mg/kg	mg/kg	mg/kg	mg/kg	mg/kg	mg/kg	mg/kg
71-55-6	1,1,1-trichloroethane	9.10E-08	4.41E-13	1.76E-08	5.58E-09	9.19E-10	2.39E-16	4.18E-16
75-34-3	1,1-dichloroethane	1.24E-13	3.65E-15	5.19E-15	1.66E-15	4.75E-16	6.68E-19	1.17E-18
75-35-4	1,1-dichloroethene	5.10E-14	1.33E-15	3.43E-15	1.10E-15	3.11E-16	3.96E-19	6.94E-19
107-06-2	1,2-dichloroethane	3.56E-13	2.18E-14	8.80E-15	2.83E-15	8.74E-16	2.37E-18	4.14E-18
78-87-5	1,2-dichloropropane	5.15E-13	3.55E-14	2.92E-14	9.37E-15	2.96E-15	9.04E-18	1.58E-17
106-99-0	1,3-butadiene	1.87E-11	3.96E-15	1.07E-12	3.42E-13	9.06E-14	9.89E-19	1.74E-18
78-93-3	2-butanone	3.70E-10	3.67E-10	4.62E-13	1.67E-13	2.22E-13	3.28E-15	5.74E-15
67-64-1	acetone	1.58E-10	1.56E-10	5.38E-14	1.95E-14	2.57E-14	3.81E-16	6.66E-16
71-43-2	benzene	3.87E-13	1.82E-14	2.58E-14	8.26E-15	2.47E-15	5.42E-18	9.48E-18
65-85-0	benzoic acid	3.68E-08	2.25E-08	3.14E-11	1.06E-11	8.78E-12	1.11E-13	1.94E-13
100-51-6	benzyl alcohol	2.66E-08	2.49E-08	1.96E-10	7.03E-11	8.71E-11	1.27E-12	2.22E-12
117-81-7	bis(2-ethylhexyl)-phthalate	2.18E-05	1.52E-09	1.76E-05	5.62E-06	1.47E-06	1.79E-11	3.14E-11
75-27-4	bromodichloromethane	1.12E-11	8.76E-12	5.19E-13	1.80E-13	1.88E-13	2.61E-15	4.57E-15
74-83-9	bromomethane	2.00E-13	7.67E-14	2.41E-15	7.98E-16	4.62E-16	4.66E-18	8.15E-18
75-15-0	carbon disulfide	1.70E-13	5.27E-14	1.17E-14	3.85E-15	2.00E-15	1.83E-17	3.21E-17
56-23-5	carbon tetrachloride	1.44E-12	1.28E-14	2.51E-13	8.02E-14	2.17E-14	1.04E-17	1.82E-17
108-90-7	chlorobenzene	2.25E-12	1.03E-13	3.86E-13	1.24E-13	3.71E-14	8.41E-17	1.47E-16
67-66-3	chloroform	4.84E-12	8.54E-14	2.80E-13	8.96E-14	2.48E-14	2.17E-17	3.80E-17
74-87-3	chloromethane	6.46E-14	1.76E-14	4.70E-16	1.54E-16	7.38E-17	6.14E-19	1.07E-18
542-75-6	cis-1,3-dichloropropene	3.89E-14	1.09E-14	1.04E-15	3.41E-16	1.66E-16	1.41E-18	2.47E-18
124-48-1	dibromochloromethane	6.56E-11	6.06E-11	3.39E-12	1.20E-12	1.50E-12	2.21E-14	3.86E-14
75-71-8	dichlorodifluoromethane	2.33E-13	2.20E-13	1.07E-14	3.81E-15	4.88E-15	7.21E-17	1.26E-16
84-74-2	di-n-butyl phthalate	2.36E-06	4.74E-09	1.72E-06	5.51E-07	1.47E-07	3.60E-11	6.29E-11
100-41-4	ethylbenzene	2.71E-12	2.61E-14	6.59E-13	2.11E-13	5.73E-14	3.14E-17	5.50E-17
76-13-1	Freon 113	6.81E-10	4.64E-16	1.77E-10	5.65E-11	1.49E-11	6.01E-19	1.05E-18
505-60-2	H	5.41E-11	2.09E-13	5.74E-12	1.83E-12	4.90E-13	9.93E-17	1.74E-16
110-54-3	hexane	8.92E-16	6.01E-16	4.34E-16	1.41E-16	1.25E-16	1.84E-17	3.22E-18
75-09-2	methylene chloride	1.27E-12	1.14E-13	2.16E-14	6.93E-15	2.29E-15	8.52E-18	1.49E-17
100-42-5	styrene	1.83E-11	1.39E-11	2.85E-12	9.72E-13	1.04E-12	1.47E-14	2.58E-14
127-18-4	tetrachloroethene	2.25E-12	7.64E-15	7.35E-13	2.35E-13	6.27E-14	1.32E-17	2.32E-17
108-88-3	toluene	7.29E-13	1.36E-14	1.12E-13	3.58E-14	9.97E-15	9.69E-18	1.70E-17
10061-02-6	trans-1,3-dichloropropene	9.99E-13	1.83E-13	8.75E-14	2.69E-14	1.10E-14	7.28E-17	1.27E-16
79-01-6	trichloroethene	3.62E-13	1.86E-14	3.72E-14	1.19E-14	3.61E-15	8.71E-18	1.52E-17
75-69-4	trichlorofluoromethane	5.36E-14	1.28E-15	6.36E-15	2.03E-15	5.74E-16	6.91E-19	1.21E-18
75-01-4	vinyl chloride	2.06E-14	6.45E-15	3.80E-16	1.25E-16	6.44E-17	5.83E-19	1.02E-18
1330-20-7	xylenes	9.19E-12	3.35E-13	2.35E-12	7.54E-13	2.21E-13	4.34E-16	7.59E-16
51207-31-9	2,3,7,8-TCDF	1.59E-11	2.18E-15	1.17E-11	3.72E-12	9.84E-13	7.06E-17	1.24E-16
7487-94-7	mercuric chloride							
7439-97-6	elemental mercury							

CALCULATIONS FOR LAND BASED MEDIA CONCENTRATIONS
SDC TECHNOLOGY
("Fmax" for Adult Cancer Risks)

CAS No.	COPC Name	Cs	Pr_ag	Pr_f	Pr_s	Pag	Pr_bg	Pf
		mg/kg	mg/kg	mg/kg	mg/kg	mg/kg	mg/kg	mg/kg
71-55-6	1,1,1-trichloroethane	4.33E-15	6.02E-15	6.02E-15	6.02E-15	2.76E-08	3.84E-15	3.09E-07
75-34-3	1,1-dichloroethane	1.41E-17	4.98E-17	4.98E-17	4.98E-17	2.46E-15	2.67E-17	2.41E-13
75-35-4	1,1-dichloroethene	7.66E-18	1.82E-17	1.82E-17	1.82E-17	1.01E-15	6.14E-18	9.94E-14
107-06-2	1,2-dichloroethane	5.66E-17	2.98E-16	2.98E-16	2.98E-16	6.69E-13	1.56E-14	6.69E-13
78-87-5	1,2-dichloropropane	1.80E-16	4.85E-16	4.85E-16	4.85E-16	1.01E-14	1.66E-16	9.59E-13
106-99-0	1,3-butadiene	1.97E-17	5.41E-17	5.41E-17	5.41E-17	3.74E-13	8.19E-19	3.74E-11
78-93-3	2-butanone	5.99E-13	5.02E-12	5.02E-12	5.02E-12	1.12E-11	1.38E-11	1.12E-11
67-64-1	acetone	2.55E-13	2.13E-12	2.13E-12	2.13E-12	5.74E-12	1.89E-11	5.74E-12
71-43-2	benzene	1.05E-16	2.48E-16	2.48E-16	2.48E-16	7.62E-15	8.39E-17	7.37E-13
65-85-0	benzoic acid	9.70E-11	3.11E-10	3.11E-10	3.11E-10	5.97E-10	2.05E-09	2.89E-08
100-51-6	benzyl alcohol	4.17E-11	3.50E-10	3.50E-10	3.50E-10	3.78E-09	2.74E-09	3.78E-09
117-81-7	bis(2-ethylhexyl)-phthalate	5.68E-10	2.48E-11	2.48E-11	2.48E-11	5.18E-07	4.85E-15	4.39E-05
75-27-4	bromodichloromethane	5.06E-14	1.20E-13	1.20E-13	1.20E-13	1.68E-13	4.42E-14	4.93E-12
74-83-9	bromomethane	1.32E-16	1.05E-15	1.05E-15	1.05E-15	2.48E-13	1.20E-14	2.48E-13
75-15-0	carbon disulfide	3.48E-16	7.20E-16	7.20E-16	7.20E-16	3.07E-15	4.38E-16	2.35E-13
56-23-5	carbon tetrachloride	1.87E-16	1.74E-16	1.74E-16	1.74E-16	2.88E-14	1.78E-16	2.86E-12
108-90-7	chlorobenzene	1.51E-15	1.41E-15	1.41E-15	1.41E-15	4.44E-14	1.14E-15	4.30E-12
67-66-3	chloroform	4.32E-16	1.17E-15	1.17E-15	1.17E-15	9.62E-14	4.36E-16	9.50E-12
74-87-3	chloromethane	2.88E-17	2.41E-16	2.41E-16	2.41E-16	9.41E-14	3.42E-15	9.41E-14
542-75-6	cis-1,3-dichloropropene	3.22E-17	1.48E-16	1.48E-16	1.48E-16	5.63E-14	3.64E-15	5.63E-14
124-48-1	dibromochloromethane	4.26E-13	8.47E-13	8.47E-13	8.47E-13	9.46E-13	7.37E-14	1.07E-11
75-71-8	dichlorodifluoromethane	1.37E-15	3.01E-15	3.01E-15	3.01E-15	3.26E-15	2.39E-16	2.76E-14
84-74-2	di-n-butyl phthalate	1.04E-09	7.71E-11	7.75E-11	7.75E-11	4.75E-08	1.94E-12	4.71E-06
100-41-4	ethylbenzene	5.71E-16	3.57E-16	3.57E-16	3.57E-16	5.40E-14	4.43E-16	5.37E-12
76-13-1	Freon 113	1.09E-17	6.34E-18	6.34E-18	6.34E-18	1.36E-11	2.52E-19	1.36E-09
505-60-2	H	1.82E-15	2.85E-15	2.85E-15	2.85E-15	1.11E-12	1.65E-17	1.08E-10
110-54-3	hexane	3.73E-17	8.20E-18	8.20E-18	8.20E-18	9.64E-17	7.72E-19	9.97E-16
75-09-2	methylene chloride	2.26E-16	1.55E-15	1.55E-15	1.55E-15	2.32E-12	8.13E-14	2.32E-12
100-42-5	styrene	2.71E-13	1.94E-13	1.94E-13	1.94E-13	2.81E-13	1.07E-15	8.92E-12
127-18-4	tetrachloroethene	2.48E-16	1.04E-16	1.04E-16	1.04E-16	4.49E-14	7.72E-16	4.48E-12
108-88-3	toluene	1.73E-16	1.85E-16	1.85E-16	1.85E-16	1.45E-14	1.34E-16	1.43E-12
10061-02-6	trans-1,3-dichloropropene	1.36E-15	2.50E-15	2.50E-15	2.50E-15	1.90E-14	3.10E-17	1.64E-12
79-01-6	trichloroethene	1.60E-16	2.54E-16	2.54E-16	2.54E-16	7.13E-15	7.91E-17	6.88E-13
75-69-4	trichlorofluoromethane	1.25E-17	1.74E-17	1.74E-17	1.74E-17	1.06E-15	1.02E-17	1.05E-13
75-01-4	vinyl chloride	1.47E-17	8.81E-17	8.81E-17	8.81E-17	2.84E-14	3.60E-15	2.84E-14
1330-20-7	xylenes	7.92E-15	4.58E-15	4.58E-15	4.58E-15	1.83E-13	1.83E-16	1.77E-11
51207-31-9	2,3,7,8-TCDF	2.06E-13	2.37E-15	2.37E-15	2.37E-15	3.29E-13	3.07E-15	3.18E-11
7487-94-7	mercuric chloride							
7439-97-6	elemental mercury	7.42E-13						

CALCULATIONS FOR LAND BASED MEDIA CONCENTRATIONS
SDC TECHNOLOGY
("Fmax" for Adult Cancer Risks)

CAS No.	COPC Name	Ps	Pr_g	Abeef	Amilk	Apork	Aegg	Achicken
		mg/kg	mg/kg	mg/kg	mg/kg	mg/kg	mg/kg	mg/kg
71-55-6	1,1,1-trichloroethane	9.10E-08	6.02E-15	1.76E-08	5.58E-09	9.19E-10	3.26E-18	5.70E-18
75-34-3	1,1-dichloroethane	1.20E-13	4.98E-17	5.10E-15	1.63E-15	4.31E-16	9.12E-21	1.60E-20
75-35-4	1,1-dichloroethene	4.97E-14	1.82E-17	3.38E-15	1.08E-15	2.85E-16	5.41E-21	9.47E-21
107-06-2	1,2-dichloroethane	3.34E-13	2.98E-16	8.48E-15	2.71E-15	7.17E-16	3.23E-20	5.65E-20
78-87-5	1,2-dichloropropane	4.80E-13	4.85E-16	2.80E-14	8.93E-15	2.36E-15	1.23E-19	2.16E-19
106-99-0	1,3-butadiene	1.87E-11	5.41E-17	1.07E-12	3.42E-13	9.05E-14	1.35E-20	2.37E-20
78-93-3	2-butanone	8.11E-12	5.02E-12	1.27E-14	4.34E-15	3.57E-15	4.49E-17	7.86E-17
67-64-1	acetone	3.94E-12	2.13E-12	1.76E-15	5.93E-16	4.38E-16	5.20E-18	9.10E-18
71-43-2	benzene	3.69E-13	2.48E-16	2.51E-14	8.00E-15	2.12E-15	7.40E-20	1.29E-19
65-85-0	benzoic acid	1.46E-08	3.11E-10	1.64E-11	5.25E-12	1.47E-12	1.53E-15	2.68E-15
100-51-6	benzyl alcohol	2.06E-09	3.50E-10	2.30E-11	7.47E-12	2.93E-12	1.78E-14	3.12E-14
117-81-7	bis(2-ethylhexyl)-phthalate	2.18E-05	2.48E-11	1.76E-05	5.62E-06	1.47E-06	2.93E-13	5.13E-13
75-27-4	bromodichloromethane	2.53E-12	1.20E-13	1.68E-13	5.40E-14	1.62E-14	3.57E-17	6.25E-17
74-83-9	bromomethane	1.25E-13	1.05E-15	1.78E-15	5.68E-16	1.53E-16	6.36E-20	1.11E-19
75-15-0	carbon disulfide	1.18E-13	7.20E-16	9.29E-15	2.97E-15	7.97E-16	2.50E-19	4.38E-19
56-23-5	carbon tetrachloride	1.43E-12	1.74E-16	2.50E-13	7.98E-14	2.11E-14	1.42E-19	2.49E-19
108-90-7	chlorobenzene	2.15E-12	1.41E-15	3.75E-13	1.20E-13	3.17E-14	1.15E-18	2.01E-18
67-66-3	chloroform	4.75E-12	1.17E-15	2.77E-13	8.85E-14	2.34E-14	2.97E-19	5.19E-19
74-87-3	chloromethane	4.72E-14	2.41E-16	3.86E-16	1.23E-16	3.30E-17	8.38E-21	1.47E-20
542-75-6	cis-1,3-dichloropropene	2.82E-14	1.48E-16	8.52E-16	2.72E-16	7.29E-17	1.92E-20	3.37E-20
124-48-1	dibromochloromethane	5.78E-12	8.47E-13	4.48E-13	1.45E-13	5.48E-14	3.09E-16	5.40E-16
75-71-8	dichlorodifluoromethane	1.53E-14	3.01E-15	1.05E-15	3.40E-16	1.43E-16	9.84E-19	1.72E-18
84-74-2	di-n-butyl phthalate	2.35E-06	7.75E-11	1.72E-06	5.50E-07	1.45E-07	5.89E-13	1.03E-12
100-41-4	ethylbenzene	2.68E-12	3.57E-16	6.55E-13	2.09E-13	5.52E-14	4.29E-19	7.51E-19
76-13-1	Freon 113	6.81E-10	6.34E-18	1.77E-10	5.65E-11	1.49E-11	8.20E-21	1.44E-20
505-60-2	H	5.39E-11	2.85E-15	5.73E-12	1.83E-12	4.83E-13	1.36E-18	2.38E-18
110-54-3	hexane	2.99E-16	8.20E-18	2.32E-16	7.39E-17	1.35E-17	2.51E-19	4.40E-20
75-09-2	methylene chloride	1.16E-12	1.55E-15	2.04E-14	6.51E-15	1.73E-15	1.16E-19	2.04E-19
100-42-5	styrene	4.55E-12	1.94E-13	9.83E-13	3.15E-13	9.40E-14	2.05E-16	3.59E-16
127-18-4	tetrachloroethene	2.24E-12	1.04E-16	7.33E-13	2.34E-13	6.18E-14	1.81E-19	3.16E-19
108-88-3	toluene	7.16E-13	1.85E-16	1.11E-13	3.53E-14	9.34E-15	1.32E-19	2.32E-19
10061-02-6	trans-1,3-dichloropropene	8.19E-13	2.50E-15	7.73E-14	2.35E-14	6.24E-15	9.94E-19	1.74E-18
79-01-6	trichloroethene	3.44E-13	2.54E-16	3.60E-14	1.15E-14	3.04E-15	1.19E-19	2.08E-19
75-69-4	trichlorofluoromethane	5.24E-14	1.74E-17	6.27E-15	2.00E-15	5.29E-16	9.43E-21	1.65E-20
75-01-4	vinyl chloride	1.42E-14	8.81E-17	3.01E-16	9.61E-17	2.58E-17	7.96E-21	1.39E-20
1330-20-7	xylenes	8.86E-12	4.58E-15	2.30E-12	7.35E-13	1.94E-13	5.93E-18	1.04E-17
51207-31-9	2,3,7,8-TCDF	1.59E-11	2.37E-15	1.17E-11	3.72E-12	9.85E-13	7.68E-17	1.34E-16
7487-94-7	mercuric chloride							
7439-97-6	elemental mercury							

COPC INTAKE AND CANCER RISK ESTIMATES
SDC TECHNOLOGY
(Adult Resident)

CAS No.	COPC Name	Isoil mg/kg/day	Iproduce mg/kg/day	Idw mg/kg/day	I_oral mg/kg/day	I_inh mg/kg/day	Cancer soil	Cancer produce	Cancer drinking water	Cancer oral	Cancer inhalation
71-55-6	1,1,1-trichloroethane	4.53E-19	8.82E-12	4.06E-13	9.22E-12	8.51E-11					
75-34-3	1,1-dichloroethane	1.48E-21	3.66E-18	2.51E-14	2.51E-14	4.10E-11	3.5E-24	8.6E-21	5.9E-17	5.9E-17	2.3E-13
75-35-4	1,1-dichloroethene	8.02E-22	1.30E-18	7.23E-15	7.23E-15	3.76E-11					
107-06-2	1,2-dichloroethane	5.92E-21	1.80E-16	1.29E-13	1.29E-13	4.15E-11	2.2E-22	6.7E-18	4.8E-15	4.8E-15	3.8E-12
78-87-5	1,2-dichloropropane	1.88E-20	3.47E-17	6.37E-14	6.37E-14	5.00E-11	5.3E-22	9.7E-19	1.8E-15	1.8E-15	3.4E-12
106-99-0	1,3-butadiene	2.07E-21	3.69E-18	7.92E-15	7.92E-15	3.59E-11	2.9E-21	5.2E-18	1.1E-14	1.1E-14	3.8E-12
78-93-3	2-butanone	6.25E-17	4.83E-13	1.10E-11	1.15E-11	4.28E-10					
67-64-1	acetone	2.66E-17	3.39E-13	1.78E-11	1.81E-11	6.36E-10					
71-43-2	benzene	1.10E-20	1.78E-17	4.19E-14	4.20E-14	6.01E-11	2.5E-22	4.0E-19	9.5E-16	9.5E-16	1.6E-12
65-85-0	benzoic acid	1.00E-14	4.17E-11	7.68E-10	8.09E-10	2.10E-09					
100-51-6	benzyl alcohol	4.25E-15	5.05E-11	1.71E-10	2.22E-10	1.96E-10					
117-81-7	bis(2-ethylhexyl)-phthalate	4.96E-14	2.98E-11	5.30E-12	3.52E-11	3.14E-10	2.9E-16	1.7E-13	3.0E-14	2.0E-13	2.6E-12
75-27-4	bromodichloromethane	5.28E-18	8.60E-15	2.89E-13	2.98E-13	1.12E-10	1.3E-19	2.2E-16	7.4E-15	7.6E-15	1.5E-11
74-83-9	bromomethane	1.38E-20	1.95E-16	1.20E-13	1.20E-13	2.09E-10					
75-15-0	carbon disulfide	3.64E-20	5.35E-17	2.16E-13	2.16E-13	8.03E-11					
56-23-5	carbon tetrachloride	1.95E-20	1.37E-17	4.64E-14	4.65E-14	2.24E-10	5.6E-22	3.9E-19	1.3E-15	1.3E-15	4.7E-12
108-90-7	chlorobenzene	1.58E-19	1.07E-16	5.34E-14	5.35E-14	4.16E-11					
67-66-3	chloroform	4.52E-20	8.39E-17	5.95E-13	5.95E-13	6.54E-10	5.8E-22	1.1E-18	7.6E-15	7.6E-15	5.3E-11
74-87-3	chloromethane	3.01E-21	5.15E-17	8.74E-14	8.74E-14	2.23E-10					
542-75-6	cis-1,3-dichloropropene	3.37E-21	4.75E-17	1.59E-14	1.60E-14	5.02E-11	1.4E-22	2.0E-18	6.6E-16	6.6E-16	7.1E-13
124-48-1	dibromochloromethane	4.35E-17	5.71E-14	4.79E-13	5.36E-13	8.20E-11	1.5E-18	2.0E-15	1.7E-14	1.9E-14	7.7E-12
75-71-8	dichlorodifluoromethane	1.44E-19	2.07E-16	1.45E-14	1.47E-14	1.06E-10					
84-74-2	di-n-butyl phthalate	9.09E-14	4.53E-12	2.32E-11	2.78E-11	2.11E-10					
100-41-4	ethylbenzene	5.97E-20	2.89E-17	2.99E-14	2.99E-14	5.30E-11	2.7E-22	1.3E-19	1.4E-16	1.4E-16	4.7E-12
76-13-1	Freon 113	1.14E-21	4.54E-19	1.81E-14	1.81E-14	1.10E-10					
505-60-2	H	1.90E-19	2.05E-16	6.94E-13	6.95E-13	2.42E-11	6.0E-19	6.5E-16	2.2E-12	2.2E-12	3.4E-10
110-54-3	hexane	3.90E-21	5.95E-19	7.42E-15	7.42E-15	9.29E-11					
75-09-2	methylene chloride	2.37E-20	9.39E-16	7.94E-13	7.95E-13	5.27E-10	7.3E-23	2.9E-18	2.4E-15	2.5E-15	1.9E-14
100-42-5	styrene	2.78E-17	1.29E-14	5.28E-14	6.58E-14	3.78E-11					
127-18-4	tetrachloroethene	2.60E-20	1.50E-17	2.80E-14	2.80E-14	4.83E-11	5.8E-21	3.3E-18	6.2E-15	6.2E-15	4.4E-14
108-88-3	toluene	1.81E-20	1.40E-17	2.02E-14	2.02E-14	3.16E-11					
10061-02-6	trans-1,3-dichloropropene	1.42E-19	1.70E-16	5.68E-14	5.70E-14	5.32E-11	5.8E-21	7.0E-18	2.3E-15	2.3E-15	7.5E-13
79-01-6	trichloroethene	1.67E-20	1.81E-17	2.22E-14	2.22E-14	4.80E-11	2.7E-21	3.0E-18	3.7E-15	3.7E-15	1.9E-11
75-69-4	trichlorofluoromethane	1.31E-21	1.29E-18	9.52E-15	9.52E-15	5.54E-11					
75-01-4	vinyl chloride	1.53E-21	4.30E-17	2.58E-14	2.58E-14	6.19E-11	4.5E-22	1.3E-17	7.6E-15	7.6E-15	9.3E-13
1330-20-7	xylenes	8.28E-19	3.14E-16	8.47E-14	8.50E-14	1.27E-10					
51207-31-9	2,3,7,8-TCDF	2.70E-19	5.63E-18	2.87E-18	8.77E-18	1.28E-16					
7487-94-7	mercuric chloride										
7439-97-6	elemental mercury	4.66E-17		1.19E-14	1.20E-14	2.42E-11					
TOTAL		**N/A**	**N/A**	**N/A**	**N/A**	**N/A**	**2.88E-16**	**1.74E-13**	**2.30E-12**	**2.48E-12**	**4.62E-10**

COPC INTAKE AND CANCER RISK ESTIMATES
SDC TECHNOLOGY
(Child Resident)

CAS No.	COPC Name	Isoil mg/kg/day	Iproduce mg/kg/day	Idw mg/kg/day	I_oral mg/kg/day	I_inh mg/kg/day	Cancer soil
71-55-6	1,1,1-trichloroethane	4.23E-18	2.12E-11	9.07E-13	2.21E-11	4.75E-11	
75-34-3	1,1-dichloroethane	1.38E-20	8.73E-18	5.60E-14	5.60E-14	2.29E-11	6.45E-24
75-35-4	1,1-dichloroethene	7.48E-21	3.12E-18	1.61E-14	1.61E-14	2.10E-11	
107-06-2	1,2-dichloroethane	5.53E-20	3.12E-16	2.87E-13	2.88E-13	2.32E-11	4.14E-22
78-87-5	1,2-dichloropropane	1.75E-19	8.34E-17	1.42E-13	1.42E-13	2.79E-11	9.80E-22
106-99-0	1,3-butadiene	1.93E-20	9.01E-18	1.77E-14	1.77E-14	2.01E-11	5.39E-21
78-93-3	2-butanone	5.84E-16	1.07E-12	2.46E-11	2.56E-11	2.39E-10	
67-64-1	acetone	2.48E-16	6.72E-13	3.97E-11	4.04E-11	3.55E-10	
71-43-2	benzene	1.02E-19	4.27E-17	9.37E-14	9.37E-14	3.36E-11	4.62E-22
65-85-0	benzoic acid	9.35E-14	8.53E-11	1.71E-09	1.80E-09	1.17E-09	
100-51-6	benzyl alcohol	3.96E-14	1.01E-10	3.83E-10	4.85E-10	1.09E-10	
117-81-7	bis(2-ethylhexyl)-phthalate	4.63E-13	7.18E-11	1.18E-11	8.41E-11	1.75E-10	5.33E-16
75-27-4	bromodichloromethane	4.93E-17	2.06E-14	6.46E-13	6.67E-13	6.26E-11	2.51E-19
74-83-9	bromomethane	1.29E-19	3.77E-16	2.68E-13	2.69E-13	1.17E-10	
75-15-0	carbon disulfide	3.40E-19	1.27E-16	4.82E-13	4.82E-13	4.49E-11	
56-23-5	carbon tetrachloride	1.82E-19	3.19E-17	1.04E-13	1.04E-13	1.25E-10	1.05E-21
108-90-7	chlorobenzene	1.47E-18	2.53E-16	1.19E-13	1.19E-13	2.32E-11	
67-66-3	chloroform	4.22E-19	2.01E-16	1.33E-12	1.33E-12	3.65E-10	1.07E-21
74-87-3	chloromethane	2.81E-20	9.77E-17	1.95E-13	1.95E-13	1.25E-10	
542-75-6	cis-1,3-dichloropropene	3.15E-20	8.60E-17	3.56E-14	3.57E-14	2.80E-11	2.59E-22
124-48-1	dibromochloromethane	4.06E-16	1.39E-13	1.07E-12	1.21E-12	4.58E-11	2.81E-18
75-71-8	dichlorodifluoromethane	1.34E-18	5.04E-16	3.24E-14	3.29E-14	5.94E-11	
84-74-2	di-n-butyl phthalate	8.49E-13	1.10E-11	5.19E-11	6.38E-11	1.18E-10	
100-41-4	ethylbenzene	5.58E-19	6.68E-17	6.68E-14	6.69E-14	2.96E-11	5.04E-22
76-13-1	Freon 113	1.07E-20	1.10E-18	4.03E-14	4.03E-14	6.14E-11	
505-60-2	H	1.78E-18	5.00E-16	1.55E-12	1.55E-12	1.35E-11	1.12E-18
110-54-3	hexane	3.64E-20	1.44E-18	1.66E-14	1.66E-14	5.19E-11	
75-09-2	methylene chloride	2.21E-19	1.63E-15	1.77E-12	1.78E-12	2.94E-10	1.36E-22
100-42-5	styrene	2.60E-16	3.16E-14	1.18E-13	1.50E-13	2.11E-11	
127-18-4	tetrachloroethene	2.42E-19	3.03E-17	6.25E-14	6.26E-14	2.70E-11	1.08E-20
108-88-3	toluene	1.69E-19	3.31E-17	4.52E-14	4.52E-14	1.76E-11	
10061-02-6	trans-1,3-dichloropropene	1.32E-18	4.15E-16	1.27E-13	1.27E-13	2.97E-11	1.09E-20
79-01-6	trichloroethene	1.56E-19	4.35E-17	4.96E-14	4.97E-14	2.68E-11	5.12E-21
75-69-4	trichlorofluoromethane	1.22E-20	3.07E-18	2.13E-14	2.13E-14	3.10E-11	
75-01-4	vinyl chloride	1.43E-20	7.54E-17	5.75E-14	5.76E-14	3.46E-11	8.47E-22
1330-20-7	xylenes	7.73E-18	7.64E-16	1.89E-13	1.90E-13	7.12E-11	
51207-31-9	2,3,7,8-TCDF	2.52E-18	1.33E-17	6.41E-18	2.22E-17	7.16E-17	
7487-94-7	mercuric chloride						
7439-97-6	elemental mercury	4.35E-16		2.66E-14	2.70E-14	1.35E-11	
TOTAL		**N/A**	**N/A**	**N/A**	**N/A**	**N/A**	**5.37E-16**

COPC INTAKE AND CANCER RISK ESTIMATES
SDC TECHNOLOGY
(Child Resident)

CAS No.	COPC Name	Cancer produce	Cancer drinking water	Cancer oral	Cancer inhalation
71-55-6	1,1,1-trichloroethane				
75-34-3	1,1-dichloroethane	4.09E-21	2.62E-17	2.63E-17	4.69E-14
75-35-4	1,1-dichloroethene				
107-06-2	1,2-dichloroethane	2.33E-18	2.15E-15	2.15E-15	7.58E-13
78-87-5	1,2-dichloropropane	4.66E-19	7.95E-16	7.95E-16	6.82E-13
106-99-0	1,3-butadiene	2.52E-18	4.94E-15	4.94E-15	7.58E-13
78-93-3	2-butanone				
67-64-1	acetone				
71-43-2	benzene	1.93E-19	4.23E-16	4.24E-16	3.26E-13
65-85-0	benzoic acid				
100-51-6	benzyl alcohol				
117-81-7	bis(2-ethylhexyl)-phthalate	8.26E-14	1.36E-14	9.68E-14	5.30E-13
75-27-4	bromodichloromethane	1.05E-16	3.29E-15	3.40E-15	2.93E-12
74-83-9	bromomethane				
75-15-0	carbon disulfide				
56-23-5	carbon tetrachloride	1.84E-19	5.97E-16	5.97E-16	9.46E-13
108-90-7	chlorobenzene				
67-66-3	chloroform	5.13E-19	3.38E-15	3.38E-15	1.06E-11
74-87-3	chloromethane				
542-75-6	cis-1,3-dichloropropene	7.07E-19	2.93E-16	2.93E-16	1.41E-13
124-48-1	dibromochloromethane	9.59E-16	7.39E-15	8.35E-15	1.55E-12
75-71-8	dichlorodifluoromethane				
84-74-2	di-n-butyl phthalate				
100-41-4	ethylbenzene	6.04E-20	6.04E-17	6.04E-17	9.45E-13
76-13-1	Freon 113				
505-60-2	H	3.17E-16	9.82E-13	9.82E-13	6.80E-11
110-54-3	hexane				
75-09-2	methylene chloride	1.00E-18	1.09E-15	1.09E-15	3.71E-15
100-42-5	styrene				
127-18-4	tetrachloroethene	1.35E-18	2.78E-15	2.78E-15	8.83E-15
108-88-3	toluene				
10061-02-6	trans-1,3-dichloropropene	3.41E-18	1.04E-15	1.05E-15	1.50E-13
79-01-6	trichloroethene	1.43E-18	1.63E-15	1.63E-15	3.86E-12
75-69-4	trichlorofluoromethane				
75-01-4	vinyl chloride	4.46E-18	3.40E-15	3.41E-15	1.87E-13
1330-20-7	xylenes				
51207-31-9	2,3,7,8-TCDF				
7487-94-7	mercuric chloride				
7439-97-6	elemental mercury				
TOTAL		**8.40E-14**	**1.03E-12**	**1.11E-12**	**9.24E-11**

COPC INTAKE AND CANCER RISK ESTIMATES
SDC TECHNOLOGY
(Fisher)

CAS No.	COPC Name	Isoil mg/kg/day	Iproduce mg/kg/day	Idw mg/kg/day	Ifish mg/kg/day	I_oral mg/kg/day	I_inh mg/kg/day
71-55-6	1,1,1-trichloroethane	4.53E-19	8.82E-12	4.06E-13	1.81E-14	9.24E-12	8.51E-11
75-34-3	1,1-dichloroethane	1.48E-21	3.66E-18	2.51E-14	2.80E-16	2.54E-14	4.10E-11
75-35-4	1,1-dichloroethene	8.02E-22	1.30E-18	7.23E-15	1.53E-16	7.38E-15	3.76E-11
107-06-2	1,2-dichloroethane	5.92E-21	1.80E-16	1.29E-13	8.51E-16	1.30E-13	4.15E-11
78-87-5	1,2-dichloropropane	1.88E-20	3.47E-17	6.37E-14	9.53E-16	6.47E-14	5.00E-11
106-99-0	1,3-butadiene	2.07E-21	3.69E-18	7.92E-15	1.89E-16	8.11E-15	3.59E-11
78-93-3	2-butanone	6.25E-17	4.83E-13	1.10E-11	1.50E-13	1.16E-11	4.28E-10
67-64-1	acetone	2.66E-17	3.39E-13	1.78E-11	3.36E-13	1.84E-11	6.36E-10
71-43-2	benzene	1.10E-20	1.78E-17	4.19E-14	8.19E-16	4.28E-14	6.01E-11
65-85-0	benzoic acid	1.00E-14	4.17E-11	7.68E-10	2.59E-12	8.12E-10	2.10E-09
100-51-6	benzyl alcohol	4.25E-15	5.05E-11	1.71E-10	5.60E-14	2.22E-10	1.96E-10
117-81-7	bis(2-ethylhexyl)-phthalate	4.96E-14	2.98E-11	5.30E-12	4.42E-12	3.96E-11	3.14E-10
75-27-4	bromodichloromethane	5.28E-18	8.60E-15	2.89E-13	5.75E-15	3.04E-13	1.12E-10
74-83-9	bromomethane	1.38E-20	1.95E-16	1.20E-13	4.94E-16	1.21E-13	2.09E-10
75-15-0	carbon disulfide	3.64E-20	5.35E-17	2.16E-13	6.63E-15	2.22E-13	8.03E-11
56-23-5	carbon tetrachloride	1.95E-20	1.37E-17	4.64E-14	3.33E-15	4.98E-14	2.24E-10
108-90-7	chlorobenzene	1.58E-19	1.07E-16	5.34E-14	3.56E-15	5.70E-14	4.16E-11
67-66-3	chloroform	4.52E-20	8.39E-17	5.95E-13	9.25E-15	6.04E-13	6.54E-10
74-87-3	chloromethane	3.01E-21	5.15E-17	8.74E-14	5.11E-16	8.79E-14	2.23E-10
542-75-6	cis-1,3-dichloropropene	3.37E-21	4.75E-17	1.59E-14	1.40E-16	1.61E-14	5.02E-11
124-48-1	dibromochloromethane	4.35E-17	5.71E-14	4.79E-13	1.19E-14	5.48E-13	8.20E-11
75-71-8	dichlorodifluoromethane	1.44E-19	2.07E-16	1.45E-14	4.19E-16	1.52E-14	1.06E-10
84-74-2	di-n-butyl phthalate	9.09E-14	4.53E-12	2.32E-11	1.99E-10	2.27E-10	2.11E-10
100-41-4	ethylbenzene	5.97E-20	2.89E-17	2.99E-14	3.19E-15	3.31E-14	5.30E-11
76-13-1	Freon 113	1.14E-21	4.54E-19	1.81E-14	2.67E-15	2.07E-14	1.10E-10
505-60-2	H	1.90E-19	2.05E-16	6.94E-13	5.26E-14	7.47E-13	2.42E-11
110-54-3	hexane	3.90E-21	5.95E-19	7.42E-15	4.94E-15	1.24E-14	9.29E-11
75-09-2	methylene chloride	2.37E-20	9.39E-16	7.94E-13	3.90E-15	7.99E-13	5.27E-10
100-42-5	styrene	2.78E-17	1.29E-14	5.28E-14	4.59E-15	7.04E-14	3.78E-11
127-18-4	tetrachloroethene	2.60E-20	1.50E-17	2.80E-14	6.12E-15	3.41E-14	4.83E-11
108-88-3	toluene	1.81E-20	1.40E-17	2.02E-14	1.09E-15	2.13E-14	3.16E-11
10061-02-6	trans-1,3-dichloropropene	1.42E-19	1.70E-16	5.68E-14	1.50E-15	5.85E-14	5.32E-11
79-01-6	trichloroethene	1.67E-20	1.81E-17	2.22E-14	7.41E-16	2.30E-14	4.80E-11
75-69-4	trichlorofluoromethane	1.31E-21	1.29E-18	9.52E-15	4.71E-16	9.99E-15	5.54E-11
75-01-4	vinyl chloride	1.53E-21	4.30E-17	2.58E-14	1.91E-16	2.60E-14	6.19E-11
1330-20-7	xylenes	8.28E-19	3.14E-16	8.47E-14	1.09E-14	9.59E-14	1.27E-10
51207-31-9	2,3,7,8-TCDF	2.70E-19	5.63E-18	2.87E-18	1.02E-16	1.10E-16	1.28E-16
7487-94-7	mercuric chloride						
7439-97-6	elemental mercury	4.66E-17		1.19E-14		1.20E-14	2.42E-11
TOTAL		**N/A**	**N/A**	**N/A**	**N/A**	**N/A**	**N/A**

COPC INTAKE AND CANCER RISK ESTIMATES
SDC TECHNOLOGY
(Fisher)

CAS No.	COPC Name	Cancer soil	Cancer produce	Cancer drinking water	Cancer fish	Cancer oral	Cancer inhalation
71-55-6	1,1,1-trichloroethane						
75-34-3	1,1-dichloroethane	3.46E-24	8.58E-21	5.88E-17	6.55E-19	5.94E-17	2.34E-13
75-35-4	1,1-dichloroethene						
107-06-2	1,2-dichloroethane	2.22E-22	6.73E-18	4.81E-15	3.18E-17	4.85E-15	3.79E-12
78-87-5	1,2-dichloropropane	5.25E-22	9.71E-19	1.78E-15	2.66E-17	1.81E-15	3.41E-12
106-99-0	1,3-butadiene	2.89E-21	5.16E-18	1.11E-14	2.64E-16	1.13E-14	3.79E-12
78-93-3	2-butanone						
67-64-1	acetone						
71-43-2	benzene	2.48E-22	4.02E-19	9.48E-16	1.85E-17	9.67E-16	1.63E-12
65-85-0	benzoic acid						
100-51-6	benzyl alcohol						
117-81-7	bis(2-ethylhexyl)-phthalate	2.85E-16	1.72E-13	3.05E-14	2.54E-14	2.28E-13	2.65E-12
75-27-4	bromodichloromethane	1.35E-19	2.19E-16	7.37E-15	1.47E-16	7.73E-15	1.46E-11
74-83-9	bromomethane						
75-15-0	carbon disulfide						
56-23-5	carbon tetrachloride	5.62E-22	3.94E-19	1.34E-15	9.59E-17	1.43E-15	4.73E-12
108-90-7	chlorobenzene						
67-66-3	chloroform	5.76E-22	1.07E-18	7.58E-15	1.18E-16	7.70E-15	5.28E-11
74-87-3	chloromethane						
542-75-6	cis-1,3-dichloropropene	1.39E-22	1.95E-18	6.55E-16	5.77E-18	6.63E-16	7.06E-13
124-48-1	dibromochloromethane	1.50E-18	1.97E-15	1.65E-14	4.12E-16	1.89E-14	7.74E-12
75-71-8	dichlorodifluoromethane						
84-74-2	di-n-butyl phthalate						
100-41-4	ethylbenzene	2.70E-22	1.30E-19	1.35E-16	1.44E-17	1.50E-16	4.72E-12
76-13-1	Freon 113						
505-60-2	H	6.02E-19	6.49E-16	2.20E-12	1.66E-13	2.36E-12	3.40E-10
110-54-3	hexane						
75-09-2	methylene chloride	7.30E-23	2.89E-18	2.45E-15	1.20E-17	2.46E-15	1.85E-14
100-42-5	styrene						
127-18-4	tetrachloroethene	5.77E-21	3.33E-18	6.21E-15	1.36E-15	7.57E-15	4.41E-14
108-88-3	toluene						
10061-02-6	trans-1,3-dichloropropene	5.83E-21	7.00E-18	2.33E-15	6.16E-17	2.40E-15	7.48E-13
79-01-6	trichloroethene	2.74E-21	2.97E-18	3.65E-15	1.22E-16	3.78E-15	1.93E-11
75-69-4	trichlorofluoromethane						
75-01-4	vinyl chloride	4.54E-22	1.27E-17	7.62E-15	5.66E-17	7.69E-15	9.33E-13
1330-20-7	xylenes						
51207-31-9	2,3,7,8-TCDF						
7487-94-7	mercuric chloride						
7439-97-6	elemental mercury						
TOTAL		**2.88E-16**	**1.74E-13**	**2.30E-12**	**1.95E-13**	**2.67E-12**	**4.62E-10**

COPC INTAKE AND CANCER RISK ESTIMATES
SDC TECHNOLOGY
(Fisher Child)

CAS No.	COPC Name	Isoil mg/kg/day	Iproduce mg/kg/day	Idw mg/kg/day	Ifish mg/kg/day	I_oral mg/kg/day	I_inh mg/kg/day
71-55-6	1,1,1-trichloroethane	4.23E-18	2.12E-11	9.07E-13	1.28E-14	2.21E-11	4.75E-11
75-34-3	1,1-dichloroethane	1.38E-20	8.73E-18	5.60E-14	1.97E-16	5.62E-14	2.29E-11
75-35-4	1,1-dichloroethene	7.48E-21	3.12E-18	1.61E-14	1.07E-16	1.63E-14	2.10E-11
107-06-2	1,2-dichloroethane	5.53E-20	3.12E-16	2.87E-13	5.99E-16	2.88E-13	2.32E-11
78-87-5	1,2-dichloropropane	1.75E-19	8.34E-17	1.42E-13	6.71E-16	1.43E-13	2.79E-11
106-99-0	1,3-butadiene	1.93E-20	9.01E-18	1.77E-14	1.33E-16	1.78E-14	2.01E-11
78-93-3	2-butanone	5.84E-16	1.07E-12	2.46E-11	1.05E-13	2.57E-11	2.39E-10
67-64-1	acetone	2.48E-16	6.72E-13	3.97E-11	2.36E-13	4.06E-11	3.55E-10
71-43-2	benzene	1.02E-19	4.27E-17	9.37E-14	5.77E-16	9.43E-14	3.36E-11
65-85-0	benzoic acid	9.35E-14	8.53E-11	1.71E-09	1.82E-12	1.80E-09	1.17E-09
100-51-6	benzyl alcohol	3.96E-14	1.01E-10	3.83E-10	3.94E-14	4.85E-10	1.09E-10
117-81-7	bis(2-ethylhexyl)-phthalate	4.63E-13	7.18E-11	1.18E-11	3.11E-12	8.72E-11	1.75E-10
75-27-4	bromodichloromethane	4.93E-17	2.06E-14	6.46E-13	4.05E-15	6.71E-13	6.26E-11
74-83-9	bromomethane	1.29E-19	3.77E-16	2.68E-13	3.48E-16	2.69E-13	1.17E-10
75-15-0	carbon disulfide	3.40E-19	1.27E-16	4.82E-13	4.67E-15	4.86E-13	4.49E-11
56-23-5	carbon tetrachloride	1.82E-19	3.19E-17	1.04E-13	2.35E-15	1.06E-13	1.25E-10
108-90-7	chlorobenzene	1.47E-18	2.53E-16	1.19E-13	2.50E-15	1.22E-13	2.32E-11
67-66-3	chloroform	4.22E-19	2.01E-16	1.33E-12	6.51E-15	1.33E-12	3.65E-10
74-87-3	chloromethane	2.81E-20	9.77E-17	1.95E-13	3.60E-16	1.96E-13	1.25E-10
542-75-6	cis-1,3-dichloropropene	3.15E-20	8.60E-17	3.56E-14	9.89E-17	3.58E-14	2.80E-11
124-48-1	dibromochloromethane	4.06E-16	1.39E-13	1.07E-12	8.39E-15	1.22E-12	4.58E-11
75-71-8	dichlorodifluoromethane	1.34E-18	5.04E-16	3.24E-14	2.95E-16	3.32E-14	5.94E-11
84-74-2	di-n-butyl phthalate	8.49E-13	1.10E-11	5.19E-11	1.40E-10	2.04E-10	1.18E-10
100-41-4	ethylbenzene	5.58E-19	6.68E-17	6.68E-14	2.25E-15	6.91E-14	2.96E-11
76-13-1	Freon 113	1.07E-20	1.10E-18	4.03E-14	1.88E-15	4.22E-14	6.14E-11
505-60-2	H	1.78E-18	5.00E-16	1.55E-12	3.70E-14	1.59E-12	1.35E-11
110-54-3	hexane	3.64E-20	1.44E-18	1.66E-14	3.47E-15	2.01E-14	5.19E-11
75-09-2	methylene chloride	2.21E-19	1.63E-15	1.77E-12	2.74E-15	1.78E-12	2.94E-10
100-42-5	styrene	2.60E-16	3.16E-14	1.18E-13	3.23E-15	1.53E-13	2.11E-11
127-18-4	tetrachloroethene	2.42E-19	3.03E-17	6.25E-14	4.31E-15	6.69E-14	2.70E-11
108-88-3	toluene	1.69E-19	3.31E-17	4.52E-14	7.66E-16	4.60E-14	1.76E-11
10061-02-6	trans-1,3-dichloropropene	1.32E-18	4.15E-16	1.27E-13	1.06E-15	1.28E-13	2.97E-11
79-01-6	trichloroethene	1.56E-19	4.35E-17	4.96E-14	5.22E-16	5.02E-14	2.68E-11
75-69-4	trichlorofluoromethane	1.22E-20	3.07E-18	2.13E-14	3.32E-16	2.16E-14	3.10E-11
75-01-4	vinyl chloride	1.43E-20	7.54E-17	5.75E-14	1.35E-16	5.77E-14	3.46E-11
1330-20-7	xylenes	7.73E-18	7.64E-16	1.89E-13	7.66E-15	1.98E-13	7.12E-11
51207-31-9	2,3,7,8-TCDF	2.52E-18	1.33E-17	6.41E-18	7.15E-17	9.37E-17	7.16E-17
7487-94-7	mercuric chloride						
7439-97-6	elemental mercury	4.35E-16		2.66E-14		2.70E-14	1.35E-11
TOTAL		**N/A**	**N/A**	**N/A**	**N/A**	**N/A**	**N/A**

COPC INTAKE AND CANCER RISK ESTIMATES
SDC TECHNOLOGY
(Fisher Child)

CAS No.	COPC Name	Cancer soil	Cancer produce	Cancer drinking water	Cancer fish	Cancer oral	Cancer inhalation
71-55-6	1,1,1-trichloroethane						
75-34-3	1,1-dichloroethane	6.45E-24	4.09E-21	2.62E-17	9.22E-20	2.63E-17	4.69E-14
75-35-4	1,1-dichloroethene						
107-06-2	1,2-dichloroethane	4.14E-22	2.33E-18	2.15E-15	4.48E-18	2.16E-15	7.58E-13
78-87-5	1,2-dichloropropane	9.80E-22	4.66E-19	7.95E-16	3.75E-18	7.99E-16	6.82E-13
106-99-0	1,3-butadiene	5.39E-21	2.52E-18	4.94E-15	3.71E-17	4.98E-15	7.58E-13
78-93-3	2-butanone						
67-64-1	acetone						
71-43-2	benzene	4.62E-22	1.93E-19	4.23E-16	2.61E-18	4.26E-16	3.26E-13
65-85-0	benzoic acid						
100-51-6	benzyl alcohol						
117-81-7	bis(2-ethylhexyl)-phthalate	5.33E-16	8.26E-14	1.36E-14	3.58E-15	1.00E-13	5.30E-13
75-27-4	bromodichloromethane	2.51E-19	1.05E-16	3.29E-15	2.06E-17	3.42E-15	2.93E-12
74-83-9	bromomethane						
75-15-0	carbon disulfide						
56-23-5	carbon tetrachloride	1.05E-21	1.84E-19	5.97E-16	1.35E-17	6.10E-16	9.46E-13
108-90-7	chlorobenzene						
67-66-3	chloroform	1.07E-21	5.13E-19	3.38E-15	1.66E-17	3.40E-15	1.06E-11
74-87-3	chloromethane						
542-75-6	cis-1,3-dichloropropene	2.59E-22	7.07E-19	2.93E-16	8.13E-19	2.94E-16	1.41E-13
124-48-1	dibromochloromethane	2.81E-18	9.59E-16	7.39E-15	5.80E-17	8.41E-15	1.55E-12
75-71-8	dichlorodifluoromethane						
84-74-2	di-n-butyl phthalate						
100-41-4	ethylbenzene	5.04E-22	6.04E-20	6.04E-17	2.03E-18	6.25E-17	9.45E-13
76-13-1	Freon 113						
505-60-2	H	1.12E-18	3.17E-16	9.82E-13	2.34E-14	1.01E-12	6.80E-11
110-54-3	hexane						
75-09-2	methylene chloride	1.36E-22	1.00E-18	1.09E-15	1.69E-18	1.10E-15	3.71E-15
100-42-5	styrene						
127-18-4	tetrachloroethene	1.08E-20	1.35E-18	2.78E-15	1.91E-16	2.97E-15	8.83E-15
108-88-3	toluene						
10061-02-6	trans-1,3-dichloropropene	1.09E-20	3.41E-18	1.04E-15	8.68E-18	1.06E-15	1.50E-13
79-01-6	trichloroethene	5.12E-21	1.43E-18	1.63E-15	1.71E-17	1.65E-15	3.86E-12
75-69-4	trichlorofluoromethane						
75-01-4	vinyl chloride	8.47E-22	4.46E-18	3.40E-15	7.97E-18	3.42E-15	1.87E-13
1330-20-7	xylenes						
51207-31-9	2,3,7,8-TCDF						
7487-94-7	mercuric chloride						
7439-97-6	elemental mercury						
TOTAL		**5.37E-16**	**8.40E-14**	**1.03E-12**	**2.74E-14**	**1.14E-12**	**9.24E-11**

COPC INTAKE AND CANCER RISK ESTIMATES
SDC TECHNOLOGY
(Farmer)

CAS No.	COPC Name	Isoil mg/kg/day	Iproduce mg/kg/day	Idw mg/kg/day	Ibeef mg/kg/day	Imilk mg/kg/day	Ipork mg/kg/day	Iegg mg/kg/day
71-55-6	1,1,1-trichloroethane	6.19E-21	1.30E-11	4.03E-13	2.14E-11	7.63E-11	5.05E-13	2.44E-21
75-34-3	1,1-dichloroethane	2.01E-23	1.19E-18	2.51E-14	6.23E-18	2.23E-17	2.37E-19	6.84E-24
75-35-4	1,1-dichloroethene	1.09E-23	4.88E-19	7.22E-15	4.12E-18	1.47E-17	1.57E-19	4.06E-24
107-06-2	1,2-dichloroethane	8.09E-23	3.17E-16	1.29E-13	1.03E-17	3.70E-17	3.94E-19	2.42E-23
78-87-5	1,2-dichloropropane	2.57E-22	5.07E-18	6.34E-14	3.41E-17	1.22E-16	1.30E-18	9.25E-23
106-99-0	1,3-butadiene	2.82E-23	1.76E-16	7.91E-15	1.31E-15	4.68E-15	4.98E-17	1.01E-23
78-93-3	2-butanone	8.56E-19	1.08E-14	1.00E-11	1.56E-17	5.93E-17	1.97E-18	3.37E-20
67-64-1	acetone	3.64E-19	7.27E-15	1.69E-11	2.15E-18	8.10E-18	2.41E-19	3.90E-21
71-43-2	benzene	1.50E-22	3.75E-18	4.18E-14	3.06E-17	1.09E-16	1.16E-18	5.55E-23
65-85-0	benzoic acid	1.39E-16	8.29E-13	1.01E-10	2.00E-14	7.18E-14	8.08E-16	1.15E-18
100-51-6	benzyl alcohol	5.96E-17	2.47E-12	1.30E-11	2.81E-14	1.02E-13	1.61E-15	1.34E-17
117-81-7	bis(2-ethylhexyl)-phthalate	8.12E-16	2.44E-10	5.08E-12	2.15E-08	7.68E-08	8.09E-10	2.20E-16
75-27-4	bromodichloromethane	7.23E-20	1.63E-16	2.31E-13	2.05E-16	7.38E-16	8.90E-18	2.68E-20
74-83-9	bromomethane	1.88E-22	1.19E-16	1.20E-13	2.17E-18	7.76E-18	8.43E-20	4.77E-23
75-15-0	carbon disulfide	4.97E-22	1.98E-18	2.15E-13	1.13E-17	4.06E-17	4.38E-19	1.88E-22
56-23-5	carbon tetrachloride	2.67E-22	1.37E-17	4.63E-14	3.05E-16	1.09E-15	1.16E-17	1.07E-22
108-90-7	chlorobenzene	2.15E-21	2.19E-17	5.26E-14	4.57E-16	1.64E-15	1.74E-17	8.61E-22
67-66-3	chloroform	6.17E-22	4.60E-17	5.94E-13	3.38E-16	1.21E-15	1.29E-17	2.23E-22
74-87-3	chloromethane	4.11E-23	4.50E-17	8.73E-14	4.71E-19	1.69E-18	1.82E-20	6.29E-24
542-75-6	cis-1,3-dichloropropene	4.61E-23	2.72E-17	1.59E-14	1.04E-18	3.72E-18	4.01E-20	1.44E-23
124-48-1	dibromochloromethane	6.08E-19	9.99E-16	3.20E-13	5.47E-16	1.98E-15	3.02E-17	2.31E-19
75-71-8	dichlorodifluoromethane	1.96E-21	3.50E-18	1.41E-14	1.28E-18	4.65E-18	7.85E-20	7.38E-22
84-74-2	di-n-butyl phthalate	1.49E-15	2.24E-11	2.24E-11	2.10E-09	7.51E-09	7.98E-11	4.41E-16
100-41-4	ethylbenzene	8.16E-22	2.57E-17	2.97E-14	7.99E-16	2.86E-15	3.04E-17	3.22E-22
76-13-1	Freon 113	1.56E-23	6.41E-15	1.81E-14	2.16E-13	7.73E-13	8.21E-15	6.15E-24
505-60-2	H	2.60E-21	5.24E-16	6.94E-13	6.99E-15	2.50E-14	2.66E-16	1.02E-21
110-54-3	hexane	5.32E-23	5.07E-20	7.42E-15	2.83E-19	1.01E-18	7.44E-21	1.88E-22
75-09-2	methylene chloride	3.23E-22	1.10E-15	7.94E-13	2.49E-17	8.90E-17	9.49E-19	8.73E-23
100-42-5	styrene	3.88E-19	2.56E-16	5.21E-14	1.20E-15	4.30E-15	5.17E-17	1.54E-19
127-18-4	tetrachloroethene	3.55E-22	2.13E-17	2.79E-14	8.95E-16	3.20E-15	3.40E-17	1.36E-22
108-88-3	toluene	2.47E-22	6.95E-18	2.01E-14	1.35E-16	4.83E-16	5.14E-18	9.93E-23
10061-02-6	trans-1,3-dichloropropene	1.94E-21	1.06E-17	5.64E-14	9.43E-17	3.21E-16	3.43E-18	7.46E-22
79-01-6	trichloroethene	2.28E-22	3.53E-18	2.21E-14	4.39E-17	1.57E-16	1.67E-18	8.92E-23
75-69-4	trichlorofluoromethane	1.79E-23	5.13E-19	9.51E-15	7.65E-18	2.74E-17	2.91E-19	7.08E-24
75-01-4	vinyl chloride	2.09E-23	1.40E-17	2.57E-14	3.67E-19	1.31E-18	1.42E-20	5.97E-24
1330-20-7	xylenes	1.13E-20	8.88E-17	8.42E-14	2.80E-15	1.00E-14	1.07E-16	4.44E-21
51207-31-9	2,3,7,8-TCDF	2.94E-19	1.57E-16	2.91E-18	1.42E-14	5.09E-14	5.42E-16	5.76E-20
7487-94-7	mercuric chloride							
7439-97-6	elemental mercury	1.06E-18		1.18E-14				
TOTAL		**N/A**	**N/A**	**N/A**	**N/A**	**N/A**	**N/A**	**N/A**

COPC INTAKE AND CANCER RISK ESTIMATES
SDC TECHNOLOGY
(Farmer)

CAS No.	COPC Name	Ichicken mg/kg/day	I_oral mg/kg/day	I_inh mg/kg/day	Cancer soil	Cancer produce	Cancer drinking water	Cancer beef
71-55-6	1,1,1-trichloroethane	3.76E-21	1.12E-10	1.14E-10				
75-34-3	1,1-dichloroethane	1.05E-23	2.51E-14	5.46E-11	6.29E-26	3.72E-21	7.83E-17	1.94E-20
75-35-4	1,1-dichloroethene	6.25E-24	7.24E-15	5.01E-11				
107-06-2	1,2-dichloroethane	3.73E-23	1.29E-13	5.53E-11	4.03E-24	1.58E-17	6.41E-15	5.16E-19
78-87-5	1,2-dichloropropane	1.43E-22	6.36E-14	6.66E-11	9.56E-24	1.89E-19	2.36E-15	1.27E-18
106-99-0	1,3-butadiene	1.57E-23	1.41E-14	4.79E-11	5.25E-23	3.27E-16	1.47E-14	2.44E-15
78-93-3	2-butanone	5.19E-20	1.00E-11	5.70E-10				
67-64-1	acetone	6.01E-21	1.69E-11	8.49E-10				
71-43-2	benzene	8.54E-23	4.20E-14	8.02E-11	4.51E-24	1.13E-19	1.26E-15	9.21E-19
65-85-0	benzoic acid	1.77E-18	1.02E-10	2.80E-09				
100-51-6	benzyl alcohol	2.06E-17	1.56E-11	2.61E-10				
117-81-7	bis(2-ethylhexyl)-phthalate	3.39E-16	9.93E-08	4.19E-10	6.23E-18	1.87E-12	3.89E-14	1.65E-10
75-27-4	bromodichloromethane	4.13E-20	2.32E-13	1.50E-10	2.46E-21	5.55E-18	7.84E-15	6.98E-18
74-83-9	bromomethane	7.34E-23	1.20E-13	2.79E-10				
75-15-0	carbon disulfide	2.89E-22	2.15E-13	1.07E-10				
56-23-5	carbon tetrachloride	1.64E-22	4.78E-14	2.99E-10	1.02E-23	5.24E-19	1.78E-15	1.17E-17
108-90-7	chlorobenzene	1.33E-21	5.48E-14	5.54E-11				
67-66-3	chloroform	3.43E-22	5.96E-13	8.71E-10	1.05E-23	7.82E-19	1.01E-14	5.74E-18
74-87-3	chloromethane	9.68E-24	8.74E-14	2.98E-10				
542-75-6	cis-1,3-dichloropropene	2.22E-23	1.59E-14	6.69E-11	2.52E-24	1.49E-18	8.72E-16	5.69E-20
124-48-1	dibromochloromethane	3.56E-19	3.24E-13	1.09E-10	2.80E-20	4.60E-17	1.47E-14	2.52E-17
75-71-8	dichlorodifluoromethane	1.14E-21	1.41E-14	1.42E-10				
84-74-2	di-n-butyl phthalate	6.80E-16	9.74E-09	2.81E-10				
100-41-4	ethylbenzene	4.96E-22	3.34E-14	7.07E-11	4.92E-24	1.55E-19	1.79E-16	4.82E-18
76-13-1	Freon 113	9.47E-24	1.02E-12	1.47E-10				
505-60-2	H	1.57E-21	7.27E-13	3.23E-11	1.10E-20	2.21E-15	2.93E-12	2.95E-14
110-54-3	hexane	2.91E-23	7.42E-15	1.24E-10				
75-09-2	methylene chloride	1.34E-22	7.95E-13	7.03E-10	1.33E-24	4.53E-18	3.26E-15	1.02E-19
100-42-5	styrene	2.37E-19	5.80E-14	5.04E-11				
127-18-4	tetrachloroethene	2.09E-22	3.20E-14	6.44E-11	1.05E-22	6.30E-18	8.24E-15	2.65E-16
108-88-3	toluene	1.53E-22	2.08E-14	4.21E-11				
10061-02-6	trans-1,3-dichloropropene	1.15E-21	5.69E-14	7.10E-11	1.06E-22	5.78E-19	3.09E-15	5.17E-18
79-01-6	trichloroethene	1.37E-22	2.23E-14	6.40E-11	4.99E-23	7.73E-19	4.85E-15	9.63E-18
75-69-4	trichlorofluoromethane	1.09E-23	9.55E-15	7.39E-11				
75-01-4	vinyl chloride	9.19E-24	2.58E-14	8.26E-11	8.26E-24	5.53E-18	1.02E-14	1.45E-19
1330-20-7	xylenes	6.84E-21	9.72E-14	1.70E-10				
51207-31-9	2,3,7,8-TCDF	8.87E-20	6.58E-14	1.71E-16				
7487-94-7	mercuric chloride							
7439-97-6	elemental mercury		1.18E-14	3.22E-11				
TOTAL		**N/A**	**N/A**	**N/A**	**6.27E-18**	**1.87E-12**	**3.06E-12**	**1.65E-10**

COPC INTAKE AND CANCER RISK ESTIMATES
SDC TECHNOLOGY
(Farmer)

CAS No.	COPC Name	Cancer milk	Cancer pork	Cancer egg	Cancer chicken	Cancer oral	Cancer inhalation
71-55-6	1,1,1-trichloroethane						
75-34-3	1,1-dichloroethane	6.96E-20	7.40E-22	2.14E-26	3.29E-26	7.84E-17	3.13E-13
75-35-4	1,1-dichloroethene						
107-06-2	1,2-dichloroethane	1.85E-18	1.97E-20	1.21E-24	1.86E-24	6.43E-15	5.06E-12
78-87-5	1,2-dichloropropane	4.55E-18	4.85E-20	3.45E-24	5.31E-24	2.37E-15	4.55E-12
106-99-0	1,3-butadiene	8.71E-15	9.28E-17	1.89E-23	2.92E-23	2.63E-14	5.05E-12
78-93-3	2-butanone						
67-64-1	acetone						
71-43-2	benzene	3.30E-18	3.51E-20	1.67E-24	2.58E-24	1.27E-15	2.17E-12
65-85-0	benzoic acid						
100-51-6	benzyl alcohol						
117-81-7	bis(2-ethylhexyl)-phthalate	5.89E-10	6.21E-12	1.69E-18	2.60E-18	7.62E-10	3.53E-12
75-27-4	bromodichloromethane	2.51E-17	3.02E-19	9.11E-22	1.40E-21	7.88E-15	1.95E-11
74-83-9	bromomethane						
75-15-0	carbon disulfide						
56-23-5	carbon tetrachloride	4.18E-17	4.44E-19	4.09E-24	6.30E-24	1.83E-15	6.31E-12
108-90-7	chlorobenzene						
67-66-3	chloroform	2.06E-17	2.18E-19	3.78E-24	5.82E-24	1.01E-14	7.04E-11
74-87-3	chloromethane						
542-75-6	cis-1,3-dichloropropene	2.04E-19	2.20E-21	7.91E-25	1.22E-24	8.73E-16	9.41E-13
124-48-1	dibromochloromethane	9.12E-17	1.39E-18	1.07E-20	1.64E-20	1.49E-14	1.03E-11
75-71-8	dichlorodifluoromethane						
84-74-2	di-n-butyl phthalate						
100-41-4	ethylbenzene	1.72E-17	1.83E-19	1.94E-24	2.99E-24	2.02E-16	6.30E-12
76-13-1	Freon 113						
505-60-2	H	1.05E-13	1.12E-15	4.29E-21	6.62E-21	3.07E-12	4.54E-10
110-54-3	hexane						
75-09-2	methylene chloride	3.66E-19	3.90E-21	3.59E-25	5.52E-25	3.27E-15	2.47E-14
100-42-5	styrene						
127-18-4	tetrachloroethene	9.48E-16	1.01E-17	4.01E-23	6.18E-23	9.47E-15	5.89E-14
108-88-3	toluene						
10061-02-6	trans-1,3-dichloropropene	1.76E-17	1.88E-19	4.09E-23	6.29E-23	3.12E-15	9.98E-13
79-01-6	trichloroethene	3.45E-17	3.67E-19	1.95E-23	3.01E-23	4.90E-15	2.57E-11
75-69-4	trichlorofluoromethane						
75-01-4	vinyl chloride	5.18E-19	5.60E-21	2.35E-24	3.63E-24	1.02E-14	1.24E-12
1330-20-7	xylenes						
51207-31-9	2,3,7,8-TCDF						
7487-94-7	mercuric chloride						
7439-97-6	elemental mercury						
TOTAL		**5.89E-10**	**6.21E-12**	**1.70E-18**	**2.62E-18**	**7.65E-10**	**6.16E-10**

COPC INTAKE AND CANCER RISK ESTIMATES
SDC TECHNOLOGY
(Farmer Child)

CAS No.	COPC Name	Isoil mg/kg/day	Iproduce mg/kg/day	Idw mg/kg/day	Ibeef mg/kg/day	Imilk mg/kg/day	Ipork mg/kg/day
71-55-6	1,1,1-trichloroethane	4.23E-18	3.11E-11	9.07E-13	1.32E-11	1.27E-10	3.86E-13
75-34-3	1,1-dichloroethane	1.38E-20	1.31E-17	5.60E-14	3.90E-18	3.77E-17	1.99E-19
75-35-4	1,1-dichloroethene	7.48E-21	4.84E-18	1.61E-14	2.57E-18	2.49E-17	1.31E-19
107-06-2	1,2-dichloroethane	5.53E-20	1.13E-15	2.87E-13	6.60E-18	6.41E-17	3.67E-19
78-87-5	1,2-dichloropropane	1.75E-19	1.10E-16	1.42E-13	2.19E-17	2.13E-16	1.24E-18
106-99-0	1,3-butadiene	1.93E-20	4.33E-16	1.77E-14	8.06E-16	7.76E-15	3.80E-17
78-93-3	2-butanone	5.84E-16	1.28E-12	2.46E-11	3.46E-16	3.79E-15	9.30E-17
67-64-1	acetone	2.48E-16	8.13E-13	3.97E-11	4.04E-17	4.41E-16	1.08E-17
71-43-2	benzene	1.02E-19	5.91E-17	9.37E-14	1.93E-17	1.87E-16	1.04E-18
65-85-0	benzoic acid	9.35E-14	1.03E-10	1.71E-09	2.35E-14	2.41E-13	3.69E-15
100-51-6	benzyl alcohol	3.96E-14	1.26E-10	3.83E-10	1.47E-13	1.59E-12	3.66E-14
117-81-7	bis(2-ethylhexyl)-phthalate	4.63E-13	5.90E-10	1.18E-11	1.32E-08	1.27E-07	6.18E-10
75-27-4	bromodichloromethane	4.93E-17	2.46E-14	6.46E-13	3.89E-16	4.08E-15	7.90E-17
74-83-9	bromomethane	1.29E-19	7.34E-16	2.68E-13	1.81E-18	1.81E-17	1.94E-19
75-15-0	carbon disulfide	3.40E-19	1.54E-16	4.82E-13	8.80E-18	8.73E-17	8.41E-19
56-23-5	carbon tetrachloride	1.82E-19	7.04E-17	1.04E-13	1.88E-16	1.82E-15	9.13E-18
108-90-7	chlorobenzene	1.47E-18	3.50E-16	1.19E-13	2.89E-16	2.80E-15	1.56E-17
67-66-3	chloroform	4.22E-19	3.47E-16	1.33E-12	2.10E-16	2.03E-15	1.04E-17
74-87-3	chloromethane	2.81E-20	2.24E-16	1.95E-13	3.52E-19	3.49E-18	3.10E-20
542-75-6	cis-1,3-dichloropropene	3.15E-20	1.68E-16	3.56E-14	7.82E-19	7.74E-18	6.98E-20
124-48-1	dibromochloromethane	4.06E-16	1.65E-13	1.07E-12	2.55E-15	2.73E-14	6.32E-16
75-71-8	dichlorodifluoromethane	1.34E-18	6.00E-16	3.24E-14	8.02E-18	8.64E-17	2.05E-18
84-74-2	di-n-butyl phthalate	8.49E-13	6.64E-11	5.19E-11	1.29E-09	1.25E-08	6.18E-11
100-41-4	ethylbenzene	5.58E-19	1.40E-16	6.68E-14	4.94E-16	4.78E-15	2.40E-17
76-13-1	Freon 113	1.07E-20	1.54E-14	4.03E-14	1.33E-13	1.28E-12	6.27E-15
505-60-2	H	1.78E-18	1.82E-15	1.55E-12	4.31E-15	4.16E-14	2.06E-16
110-54-3	hexane	3.64E-20	1.74E-18	1.66E-14	3.26E-19	3.20E-18	5.24E-20
75-09-2	methylene chloride	2.21E-19	4.59E-15	1.77E-12	1.62E-17	1.57E-16	9.62E-19
100-42-5	styrene	2.60E-16	3.77E-14	1.18E-13	2.14E-15	2.20E-14	4.36E-16
127-18-4	tetrachloroethene	2.42E-19	8.70E-17	6.25E-14	5.51E-16	5.33E-15	2.63E-17
108-88-3	toluene	1.69E-19	5.56E-17	4.52E-14	8.39E-17	8.12E-16	4.19E-18
10061-02-6	trans-1,3-dichloropropene	1.32E-18	5.13E-16	1.27E-13	6.56E-17	6.11E-16	4.62E-18
79-01-6	trichloroethene	1.56E-19	5.95E-17	4.96E-14	2.79E-17	2.70E-16	1.52E-18
75-69-4	trichlorofluoromethane	1.22E-20	4.84E-18	2.13E-14	4.77E-18	4.61E-17	2.41E-19
75-01-4	vinyl chloride	1.43E-20	1.23E-16	5.75E-14	2.85E-19	2.83E-18	2.71E-20
1330-20-7	xylenes	7.73E-18	1.11E-15	1.89E-13	1.76E-15	1.71E-14	9.30E-17
51207-31-9	2,3,7,8-TCDF	2.52E-18	3.76E-16	6.41E-18	8.74E-15	8.44E-14	4.13E-16
7487-94-7	mercuric chloride						
7439-97-6	elemental mercury	4.35E-16		2.66E-14			
TOTAL		**N/A**	**N/A**	**N/A**	**N/A**	**N/A**	**N/A**

COPC INTAKE AND CANCER RISK ESTIMATES
SDC TECHNOLOGY
(Farmer Child)

CAS No.	COPC Name	Iegg mg/kg/day	Ichicken mg/kg/day	I_oral mg/kg/day	I_inh mg/kg/day	Cancer soil
71-55-6	1,1,1-trichloroethane	1.29E-19	1.88E-19	1.72E-10	4.75E-11	
75-34-3	1,1-dichloroethane	3.61E-22	5.26E-22	5.61E-14	2.29E-11	6.45E-24
75-35-4	1,1-dichloroethene	2.14E-22	3.12E-22	1.62E-14	2.10E-11	
107-06-2	1,2-dichloroethane	1.28E-21	1.86E-21	2.88E-13	2.32E-11	4.14E-22
78-87-5	1,2-dichloropropane	4.88E-21	7.12E-21	1.43E-13	2.79E-11	9.80E-22
106-99-0	1,3-butadiene	5.34E-22	7.82E-22	2.67E-14	2.01E-11	5.39E-21
78-93-3	2-butanone	1.77E-18	2.59E-18	2.59E-11	2.39E-10	
67-64-1	acetone	2.06E-19	3.00E-19	4.05E-11	3.55E-10	
71-43-2	benzene	2.93E-21	4.27E-21	9.39E-14	3.36E-11	4.62E-22
65-85-0	benzoic acid	5.98E-17	8.72E-17	1.82E-09	1.17E-09	
100-51-6	benzyl alcohol	6.85E-16	9.99E-16	5.11E-10	1.09E-10	
117-81-7	bis(2-ethylhexyl)-phthalate	9.68E-15	1.41E-14	1.42E-07	1.75E-10	5.33E-16
75-27-4	bromodichloromethane	1.41E-18	2.06E-18	6.75E-13	6.26E-11	2.51E-19
74-83-9	bromomethane	2.51E-21	3.67E-21	2.69E-13	1.17E-10	
75-15-0	carbon disulfide	9.90E-21	1.44E-20	4.82E-13	4.49E-11	
56-23-5	carbon tetrachloride	5.63E-21	8.21E-21	1.06E-13	1.25E-10	1.05E-21
108-90-7	chlorobenzene	4.54E-20	6.62E-20	1.23E-13	2.32E-11	
67-66-3	chloroform	1.17E-20	1.71E-20	1.33E-12	3.65E-10	1.07E-21
74-87-3	chloromethane	3.32E-22	4.84E-22	1.95E-13	1.25E-10	
542-75-6	cis-1,3-dichloropropene	7.61E-22	1.11E-21	3.58E-14	2.80E-11	2.59E-22
124-48-1	dibromochloromethane	1.19E-17	1.74E-17	1.27E-12	4.58E-11	2.81E-18
75-71-8	dichlorodifluoromethane	3.89E-20	5.68E-20	3.31E-14	5.94E-11	
84-74-2	di-n-butyl phthalate	1.94E-14	2.83E-14	1.40E-08	1.18E-10	
100-41-4	ethylbenzene	1.70E-20	2.48E-20	7.22E-14	2.96E-11	5.04E-22
76-13-1	Freon 113	3.24E-22	4.73E-22	1.48E-12	6.14E-11	
505-60-2	H	5.36E-20	7.83E-20	1.60E-12	1.35E-11	1.12E-18
110-54-3	hexane	9.92E-21	1.45E-21	1.66E-14	5.19E-11	
75-09-2	methylene chloride	4.60E-21	6.71E-21	1.78E-12	2.94E-10	1.36E-22
100-42-5	styrene	7.96E-18	1.16E-17	1.81E-13	2.11E-11	
127-18-4	tetrachloroethene	7.15E-21	1.04E-20	6.85E-14	2.70E-11	1.08E-20
108-88-3	toluene	5.23E-21	7.63E-21	4.61E-14	1.76E-11	
10061-02-6	trans-1,3-dichloropropene	3.93E-20	5.73E-20	1.28E-13	2.97E-11	1.09E-20
79-01-6	trichloroethene	4.70E-21	6.86E-21	5.00E-14	2.68E-11	5.12E-21
75-69-4	trichlorofluoromethane	3.73E-22	5.44E-22	2.13E-14	3.10E-11	
75-01-4	vinyl chloride	3.15E-22	4.59E-22	5.77E-14	3.46E-11	8.47E-22
1330-20-7	xylenes	2.34E-19	3.42E-19	2.09E-13	7.12E-11	
51207-31-9	2,3,7,8-TCDF	3.81E-20	5.56E-20	9.39E-14	7.16E-17	
7487-94-7	mercuric chloride					
7439-97-6	elemental mercury			2.70E-14	1.35E-11	
TOTAL		**N/A**	**N/A**	**N/A**	**N/A**	**5.37E-16**

COPC INTAKE AND CANCER RISK ESTIMATES
SDC TECHNOLOGY
(Farmer Child)

CAS No.	COPC Name	Cancer produce	Cancer drinking water	Cancer beef	Cancer milk	Cancer pork
71-55-6	1,1,1-trichloroethane					
75-34-3	1,1-dichloroethane	6.14E-21	2.62E-17	1.83E-21	1.77E-20	9.35E-23
75-35-4	1,1-dichloroethene					
107-06-2	1,2-dichloroethane	8.48E-18	2.15E-15	4.94E-20	4.79E-19	2.74E-21
78-87-5	1,2-dichloropropane	6.16E-19	7.95E-16	1.22E-19	1.19E-18	6.95E-21
106-99-0	1,3-butadiene	1.21E-16	4.94E-15	2.25E-16	2.17E-15	1.06E-17
78-93-3	2-butanone					
67-64-1	acetone					
71-43-2	benzene	2.67E-19	4.23E-16	8.74E-20	8.47E-19	4.70E-21
65-85-0	benzoic acid					
100-51-6	benzyl alcohol					
117-81-7	bis(2-ethylhexyl)-phthalate	6.78E-13	1.36E-14	1.52E-11	1.47E-10	7.11E-13
75-27-4	bromodichloromethane	1.25E-16	3.29E-15	1.98E-18	2.08E-17	4.02E-19
74-83-9	bromomethane					
75-15-0	carbon disulfide					
56-23-5	carbon tetrachloride	4.05E-19	5.97E-16	1.08E-18	1.05E-17	5.25E-20
108-90-7	chlorobenzene					
67-66-3	chloroform	8.84E-19	3.38E-15	5.35E-19	5.18E-18	2.66E-20
74-87-3	chloromethane					
542-75-6	cis-1,3-dichloropropene	1.38E-18	2.93E-16	6.43E-21	6.36E-20	5.74E-22
124-48-1	dibromochloromethane	1.14E-15	7.39E-15	1.76E-17	1.88E-16	4.36E-18
75-71-8	dichlorodifluoromethane					
84-74-2	di-n-butyl phthalate					
100-41-4	ethylbenzene	1.27E-19	6.04E-17	4.47E-19	4.32E-18	2.17E-20
76-13-1	Freon 113					
505-60-2	H	1.15E-15	9.82E-13	2.73E-15	2.63E-14	1.30E-16
110-54-3	hexane					
75-09-2	methylene chloride	2.83E-18	1.09E-15	9.96E-21	9.69E-20	5.93E-22
100-42-5	styrene					
127-18-4	tetrachloroethene	3.86E-18	2.78E-15	2.45E-17	2.36E-16	1.17E-18
108-88-3	toluene					
10061-02-6	trans-1,3-dichloropropene	4.21E-18	1.04E-15	5.40E-19	5.02E-18	3.80E-20
79-01-6	trichloroethene	1.96E-18	1.63E-15	9.16E-19	8.88E-18	4.99E-20
75-69-4	trichlorofluoromethane					
75-01-4	vinyl chloride	7.30E-18	3.40E-15	1.69E-20	1.68E-19	1.60E-21
1330-20-7	xylenes					
51207-31-9	2,3,7,8-TCDF					
7487-94-7	mercuric chloride					
7439-97-6	elemental mercury					
TOTAL		**6.81E-13**	**1.03E-12**	**1.52E-11**	**1.47E-10**	**7.12E-13**

COPC INTAKE AND CANCER RISK ESTIMATES
SDC TECHNOLOGY
(Farmer Child)

CAS No.	COPC Name	Cancer egg	Cancer chicken	Cancer oral	Cancer inhalation
71-55-6	1,1,1-trichloroethane				
75-34-3	1,1-dichloroethane	1.69E-25	2.46E-25	2.63E-17	4.69E-14
75-35-4	1,1-dichloroethene				
107-06-2	1,2-dichloroethane	9.56E-24	1.39E-23	2.16E-15	7.58E-13
78-87-5	1,2-dichloropropane	2.73E-23	3.98E-23	7.97E-16	6.82E-13
106-99-0	1,3-butadiene	1.49E-22	2.19E-22	7.46E-15	7.58E-13
78-93-3	2-butanone				
67-64-1	acetone				
71-43-2	benzene	1.32E-23	1.93E-23	4.25E-16	3.26E-13
65-85-0	benzoic acid				
100-51-6	benzyl alcohol				
117-81-7	bis(2-ethylhexyl)-phthalate	1.11E-17	1.62E-17	1.63E-10	5.30E-13
75-27-4	bromodichloromethane	7.19E-21	1.05E-20	3.44E-15	2.93E-12
74-83-9	bromomethane				
75-15-0	carbon disulfide				
56-23-5	carbon tetrachloride	3.24E-23	4.72E-23	6.09E-16	9.46E-13
108-90-7	chlorobenzene				
67-66-3	chloroform	2.99E-23	4.36E-23	3.39E-15	1.06E-11
74-87-3	chloromethane				
542-75-6	cis-1,3-dichloropropene	6.25E-24	9.12E-24	2.94E-16	1.41E-13
124-48-1	dibromochloromethane	8.23E-20	1.20E-19	8.74E-15	1.55E-12
75-71-8	dichlorodifluoromethane				
84-74-2	di-n-butyl phthalate				
100-41-4	ethylbenzene	1.53E-23	2.24E-23	6.53E-17	9.45E-13
76-13-1	Freon 113				
505-60-2	H	3.39E-20	4.96E-20	1.01E-12	6.80E-11
110-54-3	hexane				
75-09-2	methylene chloride	2.84E-24	4.14E-24	1.10E-15	3.71E-15
100-42-5	styrene				
127-18-4	tetrachloroethene	3.17E-22	4.63E-22	3.04E-15	8.83E-15
108-88-3	toluene				
10061-02-6	trans-1,3-dichloropropene	3.23E-22	4.71E-22	1.05E-15	1.50E-13
79-01-6	trichloroethene	1.55E-22	2.25E-22	1.64E-15	3.86E-12
75-69-4	trichlorofluoromethane				
75-01-4	vinyl chloride	1.86E-23	2.72E-23	3.41E-15	1.87E-13
1330-20-7	xylenes				
51207-31-9	2,3,7,8-TCDF				
7487-94-7	mercuric chloride				
7439-97-6	elemental mercury				
TOTAL		**1.13E-17**	**1.64E-17**	**1.64E-10**	**9.24E-11**

PCBs, PCDDs, and PCDFs INTAKE AND CANCER RISK ESTIMATES AS 2,3,7,8 TCDD TEQ
SDC TECHNOLOGY

CAS No.	COPC Name	Adult Resident				Child Resident			
		I_oral_teq	I_inh_teq	cancer_oral	cancer_inh	I_oral_teq	I_inh_teq	cancer_oral	cancer_inh
51207-31-9	2,3,7,8-TCDF	8.77E-19	1.28E-17	0.00E+00	0.00E+00	2.22E-18	7.16E-18	0.00E+00	0.00E+00
TOTAL		**1.75E-18**	**2.56E-17**	**0.00E+00**	**0.00E+00**	**4.45E-18**	**1.43E-17**	**0.00E+00**	**0.00E+00**

PCBs, PCDDs, and PCDFs INTAKE AND CANCER RISK ESTIMATES AS 2,3,7,8 TCDD TEQ
SDC TECHNOLOGY

CAS No.	COPC Name	Fisher				Fisher Child			
		I_oral_teq	I_inh_teq	cancer_oral	cancer_inh	I_oral_teq	I_inh_teq	cancer_oral	cancer_inh
51207-31-9	2,3,7,8-TCDF	1.10E-17	1.28E-17	0.00E+00	0.00E+00	9.37E-18	7.16E-18	0.00E+00	0.00E+00
TOTAL		**2.21E-17**	**2.56E-17**	**0.00E+00**	**0.00E+00**	**1.87E-17**	**1.43E-17**	**0.00E+00**	**0.00E+00**

PCBs, PCDDs, and PCDFs INTAKE AND CANCER RISK ESTIMATES AS 2,3,7,8 TCDD TEQ
SDC TECHNOLOGY

CAS No.	COPC Name	Farmer				Farmer Child			
		I_oral_teq	I_inh_teq	cancer_oral	cancer_inh	I_oral_teq	I_inh_teq	cancer_oral	cancer_inh
51207-31-9	2,3,7,8-TCDF	6.58E-15	1.71E-17	0.00E+00	0.00E+00	9.39E-15	7.16E-18	0.00E+00	0.00E+00
TOTAL		**1.32E-14**	**3.42E-17**	**0.00E+00**	**0.00E+00**	**1.88E-14**	**1.43E-17**	**0.00E+00**	**0.00E+00**

COPC INTAKE AND NONCANCER HAZARD ESTIMATES
SDC TECHNOLOGY
(Adult Resident)

CAS No.	COPC Name	Isoil mg/kg/day	Iproduce mg/kg/day	Idw mg/kg/day	I_oral mg/kg/day	I_inh mg/kg/day	I_teq mg/kg/day
71-55-6	1,1,1-trichloroethane	4.53E-19	8.82E-12	4.06E-13	9.22E-12	1.99E-10	
75-34-3	1,1-dichloroethane	1.48E-21	3.66E-18	2.51E-14	2.51E-14	9.56E-11	
75-35-4	1,1-dichloroethene	8.02E-22	1.30E-18	7.23E-15	7.23E-15	8.77E-11	
107-06-2	1,2-dichloroethane	5.92E-21	1.80E-16	1.29E-13	1.29E-13	9.68E-11	
78-87-5	1,2-dichloropropane	1.88E-20	3.47E-17	6.37E-14	6.37E-14	1.17E-10	
106-99-0	1,3-butadiene	2.07E-21	3.69E-18	7.92E-15	7.92E-15	8.38E-11	
78-93-3	2-butanone	6.27E-17	4.84E-13	1.10E-11	1.15E-11	9.98E-10	
67-64-1	acetone	2.66E-17	3.39E-13	1.78E-11	1.81E-11	1.49E-09	
71-43-2	benzene	1.10E-20	1.78E-17	4.19E-14	4.20E-14	1.40E-10	
65-85-0	benzoic acid	1.01E-14	4.23E-11	7.76E-10	8.18E-10	4.89E-09	
100-51-6	benzyl alcohol	4.36E-15	5.20E-11	1.76E-10	2.28E-10	4.56E-10	
117-81-7	bis(2-ethylhexyl)-phthalate	5.93E-14	3.01E-11	5.34E-12	3.55E-11	7.33E-10	
75-27-4	bromodichloromethane	5.29E-18	8.62E-15	2.89E-13	2.98E-13	2.62E-10	
74-83-9	bromomethane	1.38E-20	1.95E-16	1.20E-13	1.20E-13	4.88E-10	
75-15-0	carbon disulfide	3.64E-20	5.35E-17	2.16E-13	2.16E-13	1.87E-10	
56-23-5	carbon tetrachloride	1.95E-20	1.37E-17	4.64E-14	4.65E-14	5.24E-10	
108-90-7	chlorobenzene	1.58E-19	1.07E-16	5.34E-14	5.35E-14	9.70E-11	
67-66-3	chloroform	4.52E-20	8.39E-17	5.95E-13	5.95E-13	1.53E-09	
74-87-3	chloromethane	3.01E-21	5.15E-17	8.74E-14	8.74E-14	5.21E-10	
542-75-6	cis-1,3-dichloropropene	3.37E-21	4.75E-17	1.59E-14	1.60E-14	1.17E-10	
124-48-1	dibromochloromethane	4.46E-17	5.85E-14	4.83E-13	5.41E-13	1.91E-10	
75-71-8	dichlorodifluoromethane	1.44E-19	2.07E-16	1.45E-14	1.47E-14	2.48E-10	
84-74-2	di-n-butyl phthalate	1.09E-13	5.40E-12	2.34E-11	2.89E-11	4.93E-10	
100-41-4	ethylbenzene	5.98E-20	2.89E-17	2.99E-14	2.99E-14	1.24E-10	
76-13-1	Freon 113	1.14E-21	4.54E-19	1.81E-14	1.81E-14	2.57E-10	
505-60-2	H	1.90E-19	2.05E-16	6.94E-13	6.95E-13	5.65E-11	
110-54-3	hexane	3.90E-21	5.95E-19	7.42E-15	7.42E-15	2.17E-10	
75-09-2	methylene chloride	2.37E-20	9.39E-16	7.94E-13	7.95E-13	1.23E-09	
100-42-5	styrene	2.84E-17	1.32E-14	5.28E-14	6.61E-14	8.81E-11	
127-18-4	tetrachloroethene	2.60E-20	1.50E-17	2.80E-14	2.80E-14	1.13E-10	
108-88-3	toluene	1.81E-20	1.40E-17	2.02E-14	2.02E-14	7.37E-11	
10061-02-6	trans-1,3-dichloropropene	1.42E-19	1.70E-16	5.68E-14	5.70E-14	1.24E-10	
79-01-6	trichloroethene	1.67E-20	1.81E-17	2.22E-14	2.22E-14	1.12E-10	
75-69-4	trichlorofluoromethane	1.31E-21	1.29E-18	9.52E-15	9.52E-15	1.29E-10	
75-01-4	vinyl chloride	1.53E-21	4.30E-17	2.58E-14	2.58E-14	1.44E-10	
1330-20-7	xylenes	8.28E-19	3.14E-16	8.47E-14	8.50E-14	2.97E-10	
51207-31-9	2,3,7,8-TCDF	5.39E-19	8.03E-18	3.25E-18	1.18E-17	2.99E-16	3.11E-17
7487-94-7	mercuric chloride						
7439-97-6	elemental mercury	6.93E-17		1.20E-14	1.20E-14	5.64E-11	
TOTAL		**N/A**	**N/A**	**N/A**	**N/A**	**N/A**	**N/A**

COPC INTAKE AND NONCANCER HAZARD ESTIMATES
SDC TECHNOLOGY
(Adult Resident)

CAS No.	COPC Name	HQ_soil	HQ_produce	HQ_dw	HQ_oral	HQ_inhalation
71-55-6	1,1,1-trichloroethane	2.17E-19	4.23E-12	1.95E-13	4.42E-12	1.40E-10
75-34-3	1,1-dichloroethane	1.42E-20	3.51E-17	2.41E-13	2.41E-13	6.85E-10
75-35-4	1,1-dichloroethene	1.54E-20	2.49E-17	1.39E-13	1.39E-13	1.54E-09
107-06-2	1,2-dichloroethane	2.84E-19	8.63E-15	6.17E-12	6.18E-12	6.94E-08
78-87-5	1,2-dichloropropane	2.00E-19	3.70E-16	6.78E-13	6.79E-13	1.02E-07
106-99-0	1,3-butadiene					1.47E-07
78-93-3	2-butanone	1.00E-16	7.73E-13	1.76E-11	1.84E-11	7.01E-10
67-64-1	acetone	2.84E-17	3.61E-13	1.89E-11	1.93E-11	1.66E-09
71-43-2	benzene	2.63E-18	4.26E-15	1.01E-11	1.01E-11	1.64E-08
65-85-0	benzoic acid	2.43E-15	1.01E-11	1.86E-10	1.96E-10	
100-51-6	benzyl alcohol	4.19E-14	4.98E-10	1.69E-09	2.19E-09	
117-81-7	bis(2-ethylhexyl)-phthalate	2.84E-12	1.44E-09	2.56E-10	1.70E-09	
75-27-4	bromodichloromethane	2.54E-16	4.13E-13	1.39E-11	1.43E-11	
74-83-9	bromomethane	9.44E-18	1.33E-13	8.23E-11	8.24E-11	3.43E-07
75-15-0	carbon disulfide	3.49E-19	5.13E-16	2.07E-12	2.07E-12	9.41E-10
56-23-5	carbon tetrachloride	4.69E-18	3.28E-15	1.11E-11	1.11E-11	1.84E-08
108-90-7	chlorobenzene	7.56E-18	5.15E-15	2.56E-12	2.56E-12	6.81E-09
67-66-3	chloroform	4.33E-18	8.05E-15	5.70E-11	5.70E-11	1.09E-07
74-87-3	chloromethane	1.11E-19	1.90E-15	3.22E-12	3.22E-12	2.03E-08
542-75-6	cis-1,3-dichloropropene	1.08E-19	1.52E-15	5.10E-13	5.11E-13	2.06E-08
124-48-1	dibromochloromethane	2.14E-15	2.80E-12	2.31E-11	2.60E-11	
75-71-8	dichlorodifluoromethane	6.89E-19	9.95E-16	6.96E-14	7.06E-14	8.71E-09
84-74-2	di-n-butyl phthalate	1.04E-12	5.17E-11	2.24E-10	2.77E-10	
100-41-4	ethylbenzene	5.73E-19	2.77E-16	2.87E-13	2.87E-13	4.35E-10
76-13-1	Freon 113	3.65E-23	1.45E-20	5.77E-16	5.77E-16	3.01E-11
505-60-2	H	2.61E-14	2.81E-11	9.51E-08	9.52E-08	9.45E-06
110-54-3	hexane	3.40E-22	5.18E-20	6.47E-16	6.47E-16	1.09E-09
75-09-2	methylene chloride	3.78E-19	1.50E-14	1.27E-11	1.27E-11	7.20E-09
100-42-5	styrene	1.36E-16	6.33E-14	2.53E-13	3.17E-13	3.10E-10
127-18-4	tetrachloroethene	2.49E-18	1.44E-15	2.68E-12	2.69E-12	9.90E-09
108-88-3	toluene	2.17E-19	1.68E-16	2.43E-13	2.43E-13	5.18E-11
10061-02-6	trans-1,3-dichloropropene	4.53E-18	5.44E-15	1.82E-12	1.82E-12	4.08E-09
79-01-6	trichloroethene	5.33E-17	5.78E-14	7.10E-11	7.11E-11	1.97E-07
75-69-4	trichlorofluoromethane	4.19E-21	4.13E-18	3.04E-14	3.04E-14	6.49E-10
75-01-4	vinyl chloride	4.90E-19	1.37E-14	8.23E-12	8.25E-12	5.08E-09
1330-20-7	xylenes	3.97E-18	1.50E-15	4.06E-13	4.08E-13	1.04E-08
51207-31-9	2,3,7,8-TCDF					
7487-94-7	mercuric chloride					
7439-97-6	elemental mercury					6.61E-07
TOTAL		**3.96E-12**	**2.04E-09**	**9.78E-08**	**9.99E-08**	**1.12E-05**

COPC INTAKE AND NONCANCER HAZARD ESTIMATES
SDC TECHNOLOGY
(Child Resident)

CAS No.	COPC Name	Isoil mg/kg/day	Iproduce mg/kg/day	Idw mg/kg/day	I_oral mg/kg/day	I_inh mg/kg/day	I_teq mg/kg/day
71-55-6	1,1,1-trichloroethane	4.23E-18	2.12E-11	9.07E-13	2.21E-11	5.55E-10	
75-34-3	1,1-dichloroethane	1.38E-20	8.73E-18	5.60E-14	5.60E-14	2.67E-10	
75-35-4	1,1-dichloroethene	7.48E-21	3.12E-18	1.61E-14	1.61E-14	2.45E-10	
107-06-2	1,2-dichloroethane	5.53E-20	3.12E-16	2.87E-13	2.88E-13	2.70E-10	
78-87-5	1,2-dichloropropane	1.75E-19	8.34E-17	1.42E-13	1.42E-13	3.26E-10	
106-99-0	1,3-butadiene	1.93E-20	9.01E-18	1.77E-14	1.77E-14	2.34E-10	
78-93-3	2-butanone	5.85E-16	1.07E-12	2.46E-11	2.56E-11	2.79E-09	
67-64-1	acetone	2.49E-16	6.73E-13	3.97E-11	4.04E-11	4.15E-09	
71-43-2	benzene	1.02E-19	4.27E-17	9.37E-14	9.37E-14	3.92E-10	
65-85-0	benzoic acid	9.47E-14	8.64E-11	1.73E-09	1.82E-09	1.37E-08	
100-51-6	benzyl alcohol	4.07E-14	1.04E-10	3.93E-10	4.97E-10	1.27E-09	
117-81-7	bis(2-ethylhexyl)-phthalate	5.53E-13	7.25E-11	1.19E-11	8.50E-11	2.05E-09	
75-27-4	bromodichloromethane	4.94E-17	2.07E-14	6.46E-13	6.67E-13	7.31E-10	
74-83-9	bromomethane	1.29E-19	3.77E-16	2.68E-13	2.69E-13	1.36E-09	
75-15-0	carbon disulfide	3.40E-19	1.27E-16	4.82E-13	4.82E-13	5.24E-10	
56-23-5	carbon tetrachloride	1.82E-19	3.19E-17	1.04E-13	1.04E-13	1.46E-09	
108-90-7	chlorobenzene	1.47E-18	2.53E-16	1.19E-13	1.19E-13	2.71E-10	
67-66-3	chloroform	4.22E-19	2.01E-16	1.33E-12	1.33E-12	4.26E-09	
74-87-3	chloromethane	2.81E-20	9.77E-17	1.95E-13	1.95E-13	1.46E-09	
542-75-6	cis-1,3-dichloropropene	3.15E-20	8.60E-17	3.56E-14	3.57E-14	3.27E-10	
124-48-1	dibromochloromethane	4.16E-16	1.42E-13	1.08E-12	1.22E-12	5.34E-10	
75-71-8	dichlorodifluoromethane	1.34E-18	5.04E-16	3.24E-14	3.29E-14	6.93E-10	
84-74-2	di-n-butyl phthalate	1.01E-12	1.31E-11	5.22E-11	6.64E-11	1.38E-09	
100-41-4	ethylbenzene	5.58E-19	6.68E-17	6.68E-14	6.69E-14	3.46E-10	
76-13-1	Freon 113	1.07E-20	1.10E-18	4.03E-14	4.03E-14	7.17E-10	
505-60-2	H	1.78E-18	5.00E-16	1.55E-12	1.55E-12	1.58E-10	
110-54-3	hexane	3.64E-20	1.44E-18	1.66E-14	1.66E-14	6.05E-10	
75-09-2	methylene chloride	2.21E-19	1.63E-15	1.77E-12	1.78E-12	3.44E-09	
100-42-5	styrene	2.65E-16	3.22E-14	1.18E-13	1.51E-13	2.46E-10	
127-18-4	tetrachloroethene	2.42E-19	3.03E-17	6.25E-14	6.26E-14	3.15E-10	
108-88-3	toluene	1.69E-19	3.31E-17	4.52E-14	4.52E-14	2.06E-10	
10061-02-6	trans-1,3-dichloropropene	1.32E-18	4.16E-16	1.27E-13	1.27E-13	3.47E-10	
79-01-6	trichloroethene	1.56E-19	4.35E-17	4.96E-14	4.97E-14	3.13E-10	
75-69-4	trichlorofluoromethane	1.22E-20	3.07E-18	2.13E-14	2.13E-14	3.61E-10	
75-01-4	vinyl chloride	1.43E-20	7.54E-17	5.75E-14	5.76E-14	4.04E-10	
1330-20-7	xylenes	7.73E-18	7.65E-16	1.89E-13	1.90E-13	8.30E-10	
51207-31-9	2,3,7,8-TCDF	5.03E-18	1.89E-17	7.27E-18	3.12E-17	8.36E-16	8.67E-17
7487-94-7	mercuric chloride						
7439-97-6	elemental mercury	6.47E-16		2.67E-14	2.74E-14	1.58E-10	
TOTAL		**N/A**	**N/A**	**N/A**	**N/A**	**N/A**	**N/A**

COPC INTAKE AND NONCANCER HAZARD ESTIMATES
SDC TECHNOLOGY
(Child Resident)

CAS No.	COPC Name	HQ_soil	HQ_produce	HQ_dw	HQ_oral	HQ_inhalation
71-55-6	1,1,1-trichloroethane	2.03E-18	1.02E-11	4.35E-13	1.06E-11	1.40E-10
75-34-3	1,1-dichloroethane	1.32E-19	8.37E-17	5.37E-13	5.37E-13	6.85E-10
75-35-4	1,1-dichloroethene	1.43E-19	5.99E-17	3.10E-13	3.10E-13	1.54E-09
107-06-2	1,2-dichloroethane	2.65E-18	1.50E-14	1.38E-11	1.38E-11	6.94E-08
78-87-5	1,2-dichloropropane	1.87E-18	8.89E-16	1.52E-12	1.52E-12	1.02E-07
106-99-0	1,3-butadiene					1.47E-07
78-93-3	2-butanone	9.35E-16	1.71E-12	3.93E-11	4.10E-11	7.01E-10
67-64-1	acetone	2.65E-16	7.17E-13	4.23E-11	4.30E-11	1.66E-09
71-43-2	benzene	2.45E-17	1.02E-14	2.25E-11	2.25E-11	1.64E-08
65-85-0	benzoic acid	2.27E-14	2.07E-11	4.16E-10	4.36E-10	
100-51-6	benzyl alcohol	3.91E-13	1.00E-09	3.77E-09	4.77E-09	
117-81-7	bis(2-ethylhexyl)-phthalate	2.65E-11	3.47E-09	5.72E-10	4.07E-09	
75-27-4	bromodichloromethane	2.37E-15	9.92E-13	3.10E-11	3.20E-11	
74-83-9	bromomethane	8.81E-17	2.58E-13	1.84E-10	1.84E-10	3.43E-07
75-15-0	carbon disulfide	3.26E-18	1.22E-15	4.62E-12	4.62E-12	9.41E-10
56-23-5	carbon tetrachloride	4.37E-17	7.66E-15	2.49E-11	2.49E-11	1.84E-08
108-90-7	chlorobenzene	7.06E-17	1.21E-14	5.71E-12	5.72E-12	6.81E-09
67-66-3	chloroform	4.05E-17	1.93E-14	1.27E-10	1.27E-10	1.09E-07
74-87-3	chloromethane	1.04E-18	3.60E-15	7.20E-12	7.20E-12	2.03E-08
542-75-6	cis-1,3-dichloropropene	1.01E-18	2.75E-15	1.14E-12	1.14E-12	2.06E-08
124-48-1	dibromochloromethane	1.99E-14	6.81E-12	5.17E-11	5.85E-11	
75-71-8	dichlorodifluoromethane	6.43E-18	2.42E-15	1.56E-13	1.58E-13	8.71E-09
84-74-2	di-n-butyl phthalate	9.73E-12	1.26E-10	5.01E-10	6.37E-10	
100-41-4	ethylbenzene	5.35E-18	6.41E-16	6.40E-13	6.41E-13	4.35E-10
76-13-1	Freon 113	3.41E-22	3.53E-20	1.29E-15	1.29E-15	3.01E-11
505-60-2	H	2.43E-13	6.85E-11	2.12E-07	2.13E-07	9.45E-06
110-54-3	hexane	3.17E-21	1.26E-19	1.44E-15	1.44E-15	1.09E-09
75-09-2	methylene chloride	3.53E-18	2.60E-14	2.84E-11	2.84E-11	7.20E-09
100-42-5	styrene	1.27E-15	1.55E-13	5.66E-13	7.22E-13	3.10E-10
127-18-4	tetrachloroethene	2.33E-17	2.91E-15	6.00E-12	6.00E-12	9.90E-09
108-88-3	toluene	2.03E-18	3.96E-16	5.42E-13	5.42E-13	5.18E-11
10061-02-6	trans-1,3-dichloropropene	4.23E-17	1.33E-14	4.06E-12	4.07E-12	4.08E-09
79-01-6	trichloroethene	4.98E-16	1.39E-13	1.59E-10	1.59E-10	1.97E-07
75-69-4	trichlorofluoromethane	3.91E-20	9.81E-18	6.80E-14	6.80E-14	6.49E-10
75-01-4	vinyl chloride	4.57E-18	2.41E-14	1.84E-11	1.84E-11	5.08E-09
1330-20-7	xylenes	3.71E-17	3.67E-15	9.07E-13	9.11E-13	1.04E-08
51207-31-9	2,3,7,8-TCDF					
7487-94-7	mercuric chloride					
7439-97-6	elemental mercury					6.61E-07
TOTAL		**3.69E-11**	**4.71E-09**	**2.18E-07**	**2.23E-07**	**1.12E-05**

COPC INTAKE AND NONCANCER HAZARD ESTIMATES
SDC TECHNOLOGY
(Fisher)

CAS No.	COPC Name	Isoil mg/kg/day	Iproduce mg/kg/day	Idw mg/kg/day	Ifish mg/kg/day	I_oral mg/kg/day	I_inh mg/kg/day	I_teq mg/kg/day
71-55-6	1,1,1-trichloroethane	4.53E-19	8.82E-12	4.06E-13	1.81E-14	9.24E-12	1.99E-10	
75-34-3	1,1-dichloroethane	1.48E-21	3.66E-18	2.51E-14	2.80E-16	2.54E-14	9.56E-11	
75-35-4	1,1-dichloroethene	8.02E-22	1.30E-18	7.23E-15	1.53E-16	7.38E-15	8.77E-11	
107-06-2	1,2-dichloroethane	5.92E-21	1.80E-16	1.29E-13	8.51E-16	1.30E-13	9.68E-11	
78-87-5	1,2-dichloropropane	1.88E-20	3.47E-17	6.37E-14	9.53E-16	6.47E-14	1.17E-10	
106-99-0	1,3-butadiene	2.07E-21	3.69E-18	7.92E-15	1.89E-16	8.11E-15	8.38E-11	
78-93-3	2-butanone	6.27E-17	4.84E-13	1.10E-11	1.50E-13	1.16E-11	9.98E-10	
67-64-1	acetone	2.66E-17	3.39E-13	1.78E-11	3.36E-13	1.84E-11	1.49E-09	
71-43-2	benzene	1.10E-20	1.78E-17	4.19E-14	8.19E-16	4.28E-14	1.40E-10	
65-85-0	benzoic acid	1.01E-14	4.23E-11	7.76E-10	2.62E-12	8.21E-10	4.89E-09	
100-51-6	benzyl alcohol	4.36E-15	5.20E-11	1.76E-10	5.75E-14	2.28E-10	4.56E-10	
117-81-7	bis(2-ethylhexyl)-phthalate	5.93E-14	3.01E-11	5.34E-12	4.46E-12	4.00E-11	7.33E-10	
75-27-4	bromodichloromethane	5.29E-18	8.62E-15	2.89E-13	5.75E-15	3.04E-13	2.62E-10	
74-83-9	bromomethane	1.38E-20	1.95E-16	1.20E-13	4.94E-16	1.21E-13	4.88E-10	
75-15-0	carbon disulfide	3.64E-20	5.35E-17	2.16E-13	6.63E-15	2.22E-13	1.87E-10	
56-23-5	carbon tetrachloride	1.95E-20	1.37E-17	4.64E-14	3.33E-15	4.98E-14	5.24E-10	
108-90-7	chlorobenzene	1.58E-19	1.07E-16	5.34E-14	3.56E-15	5.70E-14	9.70E-11	
67-66-3	chloroform	4.52E-20	8.39E-17	5.95E-13	9.25E-15	6.04E-13	1.53E-09	
74-87-3	chloromethane	3.01E-21	5.15E-17	8.74E-14	5.11E-16	8.79E-14	5.21E-10	
542-75-6	cis-1,3-dichloropropene	3.37E-21	4.75E-17	1.59E-14	1.40E-16	1.61E-14	1.17E-10	
124-48-1	dibromochloromethane	4.46E-17	5.85E-14	4.83E-13	1.20E-14	5.53E-13	1.91E-10	
75-71-8	dichlorodifluoromethane	1.44E-19	2.07E-16	1.45E-14	4.19E-16	1.52E-14	2.48E-10	
84-74-2	di-n-butyl phthalate	1.09E-13	5.40E-12	2.34E-11	2.00E-10	2.29E-10	4.93E-10	
100-41-4	ethylbenzene	5.98E-20	2.89E-17	2.99E-14	3.19E-15	3.31E-14	1.24E-10	
76-13-1	Freon 113	1.14E-21	4.54E-19	1.81E-14	2.67E-15	2.07E-14	2.57E-10	
505-60-2	H	1.90E-19	2.05E-16	6.94E-13	5.26E-14	7.47E-13	5.65E-11	
110-54-3	hexane	3.90E-21	5.95E-19	7.42E-15	4.94E-15	1.24E-14	2.17E-10	
75-09-2	methylene chloride	2.37E-20	9.39E-16	7.94E-13	3.90E-15	7.99E-13	1.23E-09	
100-42-5	styrene	2.84E-17	1.32E-14	5.28E-14	4.59E-15	7.07E-14	8.81E-11	
127-18-4	tetrachloroethene	2.60E-20	1.50E-17	2.80E-14	6.12E-15	3.41E-14	1.13E-10	
108-88-3	toluene	1.81E-20	1.40E-17	2.02E-14	1.09E-15	2.13E-14	7.37E-11	
10061-02-6	trans-1,3-dichloropropene	1.42E-19	1.70E-16	5.68E-14	1.50E-15	5.85E-14	1.24E-10	
79-01-6	trichloroethene	1.67E-20	1.81E-17	2.22E-14	7.41E-16	2.30E-14	1.12E-10	
75-69-4	trichlorofluoromethane	1.31E-21	1.29E-18	9.52E-15	4.71E-16	9.99E-15	1.29E-10	
75-01-4	vinyl chloride	1.53E-21	4.30E-17	2.58E-14	1.91E-16	2.60E-14	1.44E-10	
1330-20-7	xylenes	8.28E-19	3.14E-16	8.47E-14	1.09E-14	9.59E-14	2.97E-10	
51207-31-9	2,3,7,8-TCDF	5.39E-19	8.03E-18	3.25E-18	1.20E-16	1.31E-16	2.99E-16	4.31E-17
7487-94-7	mercuric chloride							
7439-97-6	elemental mercury	6.93E-17		1.20E-14		1.20E-14	5.64E-11	
TOTAL		**N/A**	**N/A**	**N/A**	**N/A**	**N/A**	**N/A**	**N/A**

COPC INTAKE AND NONCANCER HAZARD ESTIMATES
SDC TECHNOLOGY
(Fisher)

CAS No.	COPC Name	HQ_soil	HQ_produce	HQ_dw	HQ_fish	HQ_oral	HQ_inhalation
71-55-6	1,1,1-trichloroethane	2.17E-19	4.23E-12	1.95E-13	8.70E-15	4.43E-12	1.40E-10
75-34-3	1,1-dichloroethane	1.42E-20	3.51E-17	2.41E-13	2.68E-15	2.43E-13	6.85E-10
75-35-4	1,1-dichloroethene	1.54E-20	2.49E-17	1.39E-13	2.93E-15	1.42E-13	1.54E-09
107-06-2	1,2-dichloroethane	2.84E-19	8.63E-15	6.17E-12	4.08E-14	6.22E-12	6.94E-08
78-87-5	1,2-dichloropropane	2.00E-19	3.70E-16	6.78E-13	1.01E-14	6.89E-13	1.02E-07
106-99-0	1,3-butadiene						1.47E-07
78-93-3	2-butanone	1.00E-16	7.73E-13	1.76E-11	2.39E-13	1.86E-11	7.01E-10
67-64-1	acetone	2.84E-17	3.61E-13	1.89E-11	3.58E-13	1.97E-11	1.66E-09
71-43-2	benzene	2.63E-18	4.26E-15	1.01E-11	1.96E-13	1.03E-11	1.64E-08
65-85-0	benzoic acid	2.43E-15	1.01E-11	1.86E-10	6.28E-13	1.97E-10	
100-51-6	benzyl alcohol	4.19E-14	4.98E-10	1.69E-09	5.51E-13	2.19E-09	
117-81-7	bis(2-ethylhexyl)-phthalate	2.84E-12	1.44E-09	2.56E-10	2.14E-10	1.92E-09	
75-27-4	bromodichloromethane	2.54E-16	4.13E-13	1.39E-11	2.76E-13	1.46E-11	
74-83-9	bromomethane	9.44E-18	1.33E-13	8.23E-11	3.38E-13	8.28E-11	3.43E-07
75-15-0	carbon disulfide	3.49E-19	5.13E-16	2.07E-12	6.36E-14	2.13E-12	9.41E-10
56-23-5	carbon tetrachloride	4.69E-18	3.28E-15	1.11E-11	7.99E-13	1.19E-11	1.84E-08
108-90-7	chlorobenzene	7.56E-18	5.15E-15	2.56E-12	1.71E-13	2.73E-12	6.81E-09
67-66-3	chloroform	4.33E-18	8.05E-15	5.70E-11	8.87E-13	5.79E-11	1.09E-07
74-87-3	chloromethane	1.11E-19	1.90E-15	3.22E-12	1.88E-14	3.24E-12	2.03E-08
542-75-6	cis-1,3-dichloropropene	1.08E-19	1.52E-15	5.10E-13	4.49E-15	5.16E-13	2.06E-08
124-48-1	dibromochloromethane	2.14E-15	2.80E-12	2.31E-11	5.78E-13	2.65E-11	
75-71-8	dichlorodifluoromethane	6.89E-19	9.95E-16	6.96E-14	2.01E-15	7.26E-14	8.71E-09
84-74-2	di-n-butyl phthalate	1.04E-12	5.17E-11	2.24E-10	1.92E-09	2.20E-09	
100-41-4	ethylbenzene	5.73E-19	2.77E-16	2.87E-13	3.06E-14	3.18E-13	4.35E-10
76-13-1	Freon 113	3.65E-23	1.45E-20	5.77E-16	8.52E-17	6.62E-16	3.01E-11
505-60-2	H	2.61E-14	2.81E-11	9.51E-08	7.21E-09	1.02E-07	9.45E-06
110-54-3	hexane	3.40E-22	5.18E-20	6.47E-16	4.30E-16	1.08E-15	1.09E-09
75-09-2	methylene chloride	3.78E-19	1.50E-14	1.27E-11	6.23E-14	1.28E-11	7.20E-09
100-42-5	styrene	1.36E-16	6.33E-14	2.53E-13	2.20E-14	3.39E-13	3.10E-10
127-18-4	tetrachloroethene	2.49E-18	1.44E-15	2.68E-12	5.87E-13	3.27E-12	9.90E-09
108-88-3	toluene	2.17E-19	1.68E-16	2.43E-13	1.30E-14	2.56E-13	5.18E-11
10061-02-6	trans-1,3-dichloropropene	4.53E-18	5.44E-15	1.82E-12	4.79E-14	1.87E-12	4.08E-09
79-01-6	trichloroethene	5.33E-17	5.78E-14	7.10E-11	2.37E-12	7.35E-11	1.97E-07
75-69-4	trichlorofluoromethane	4.19E-21	4.13E-18	3.04E-14	1.51E-15	3.19E-14	6.49E-10
75-01-4	vinyl chloride	4.90E-19	1.37E-14	8.23E-12	6.11E-14	8.31E-12	5.08E-09
1330-20-7	xylenes	3.97E-18	1.50E-15	4.06E-13	5.22E-14	4.60E-13	1.04E-08
51207-31-9	2,3,7,8-TCDF						
7487-94-7	mercuric chloride						
7439-97-6	elemental mercury						6.61E-07
TOTAL		**3.96E-12**	**2.04E-09**	**9.78E-08**	**9.35E-09**	**1.09E-07**	**1.12E-05**

COPC INTAKE AND NONCANCER HAZARD ESTIMATES
SDC TECHNOLOGY
(Fisher Child)

CAS No.	COPC Name	Isoil mg/kg/day	Iproduce mg/kg/day	Idw mg/kg/day	Ifish mg/kg/day	I_oral mg/kg/day	I_inh mg/kg/day	I_teq mg/kg/day
71-55-6	1,1,1-trichloroethane	4.23E-18	2.12E-11	9.07E-13	1.28E-14	2.21E-11	5.55E-10	
75-34-3	1,1-dichloroethane	1.38E-20	8.73E-18	5.60E-14	1.97E-16	5.62E-14	2.67E-10	
75-35-4	1,1-dichloroethene	7.48E-21	3.12E-18	1.61E-14	1.07E-16	1.63E-14	2.45E-10	
107-06-2	1,2-dichloroethane	5.53E-20	3.12E-16	2.87E-13	5.99E-16	2.88E-13	2.70E-10	
78-87-5	1,2-dichloropropane	1.75E-19	8.34E-17	1.42E-13	6.71E-16	1.43E-13	3.26E-10	
106-99-0	1,3-butadiene	1.93E-20	9.01E-18	1.77E-14	1.33E-16	1.78E-14	2.34E-10	
78-93-3	2-butanone	5.85E-16	1.07E-12	2.46E-11	1.05E-13	2.57E-11	2.79E-09	
67-64-1	acetone	2.49E-16	6.73E-13	3.97E-11	2.36E-13	4.06E-11	4.15E-09	
71-43-2	benzene	1.02E-19	4.27E-17	9.37E-14	5.77E-16	9.43E-14	3.92E-10	
65-85-0	benzoic acid	9.47E-14	8.64E-11	1.73E-09	1.84E-12	1.82E-09	1.37E-08	
100-51-6	benzyl alcohol	4.07E-14	1.04E-10	3.93E-10	4.05E-14	4.97E-10	1.27E-09	
117-81-7	bis(2-ethylhexyl)-phthalate	5.53E-13	7.25E-11	1.19E-11	3.14E-12	8.81E-11	2.05E-09	
75-27-4	bromodichloromethane	4.94E-17	2.07E-14	6.46E-13	4.05E-15	6.71E-13	7.31E-10	
74-83-9	bromomethane	1.29E-19	3.77E-16	2.68E-13	3.48E-16	2.69E-13	1.36E-09	
75-15-0	carbon disulfide	3.40E-19	1.27E-16	4.82E-13	4.67E-15	4.86E-13	5.24E-10	
56-23-5	carbon tetrachloride	1.82E-19	3.19E-17	1.04E-13	2.35E-15	1.06E-13	1.46E-09	
108-90-7	chlorobenzene	1.47E-18	2.53E-16	1.19E-13	2.50E-15	1.22E-13	2.71E-10	
67-66-3	chloroform	4.22E-19	2.01E-16	1.33E-12	6.51E-15	1.33E-12	4.26E-09	
74-87-3	chloromethane	2.81E-20	9.77E-17	1.95E-13	3.60E-16	1.96E-13	1.46E-09	
542-75-6	cis-1,3-dichloropropene	3.15E-20	8.60E-17	3.56E-14	9.89E-17	3.58E-14	3.27E-10	
124-48-1	dibromochloromethane	4.16E-16	1.42E-13	1.08E-12	8.48E-15	1.23E-12	5.34E-10	
75-71-8	dichlorodifluoromethane	1.34E-18	5.04E-16	3.24E-14	2.95E-16	3.32E-14	6.93E-10	
84-74-2	di-n-butyl phthalate	1.01E-12	1.31E-11	5.22E-11	1.41E-10	2.07E-10	1.38E-09	
100-41-4	ethylbenzene	5.58E-19	6.68E-17	6.68E-14	2.25E-15	6.91E-14	3.46E-10	
76-13-1	Freon 113	1.07E-20	1.10E-18	4.03E-14	1.88E-15	4.22E-14	7.17E-10	
505-60-2	H	1.78E-18	5.00E-16	1.55E-12	3.70E-14	1.59E-12	1.58E-10	
110-54-3	hexane	3.64E-20	1.44E-18	1.66E-14	3.47E-15	2.01E-14	6.05E-10	
75-09-2	methylene chloride	2.21E-19	1.63E-15	1.77E-12	2.74E-15	1.78E-12	3.44E-09	
100-42-5	styrene	2.65E-16	3.22E-14	1.18E-13	3.23E-15	1.54E-13	2.46E-10	
127-18-4	tetrachloroethene	2.42E-19	3.03E-17	6.25E-14	4.31E-15	6.69E-14	3.15E-10	
108-88-3	toluene	1.69E-19	3.31E-17	4.52E-14	7.66E-16	4.60E-14	2.06E-10	
10061-02-6	trans-1,3-dichloropropene	1.32E-18	4.16E-16	1.27E-13	1.06E-15	1.28E-13	3.47E-10	
79-01-6	trichloroethene	1.56E-19	4.35E-17	4.96E-14	5.22E-16	5.02E-14	3.13E-10	
75-69-4	trichlorofluoromethane	1.22E-20	3.07E-18	2.13E-14	3.32E-16	2.16E-14	3.61E-10	
75-01-4	vinyl chloride	1.43E-20	7.54E-17	5.75E-14	1.35E-16	5.77E-14	4.04E-10	
1330-20-7	xylenes	7.73E-18	7.65E-16	1.89E-13	7.66E-15	1.98E-13	8.30E-10	
51207-31-9	2,3,7,8-TCDF	5.03E-18	1.89E-17	7.27E-18	8.42E-17	1.15E-16	8.36E-16	9.51E-17
7487-94-7	mercuric chloride							
7439-97-6	elemental mercury	6.47E-16		2.67E-14		2.74E-14	1.58E-10	
TOTAL		**N/A**	**N/A**	**N/A**	**N/A**	**N/A**	**N/A**	**N/A**

COPC INTAKE AND NONCANCER HAZARD ESTIMATES
SDC TECHNOLOGY
(Fisher Child)

CAS No.	COPC Name	HQ_soil	HQ_produce	HQ_dw	HQ_fish	HQ_oral	HQ_inhalation
71-55-6	1,1,1-trichloroethane	2.03E-18	1.02E-11	4.35E-13	6.12E-15	1.06E-11	1.40E-10
75-34-3	1,1-dichloroethane	1.32E-19	8.37E-17	5.37E-13	1.89E-15	5.39E-13	6.85E-10
75-35-4	1,1-dichloroethene	1.43E-19	5.99E-17	3.10E-13	2.06E-15	3.12E-13	1.54E-09
107-06-2	1,2-dichloroethane	2.65E-18	1.50E-14	1.38E-11	2.87E-14	1.38E-11	6.94E-08
78-87-5	1,2-dichloropropane	1.87E-18	8.89E-16	1.52E-12	7.15E-15	1.52E-12	1.02E-07
106-99-0	1,3-butadiene						1.47E-07
78-93-3	2-butanone	9.35E-16	1.71E-12	3.93E-11	1.68E-13	4.11E-11	7.01E-10
67-64-1	acetone	2.65E-16	7.17E-13	4.23E-11	2.52E-13	4.33E-11	1.66E-09
71-43-2	benzene	2.45E-17	1.02E-14	2.25E-11	1.38E-13	2.26E-11	1.64E-08
65-85-0	benzoic acid	2.27E-14	2.07E-11	4.16E-10	4.42E-13	4.37E-10	
100-51-6	benzyl alcohol	3.91E-13	1.00E-09	3.77E-09	3.88E-13	4.77E-09	
117-81-7	bis(2-ethylhexyl)-phthalate	2.65E-11	3.47E-09	5.72E-10	1.50E-10	4.22E-09	
75-27-4	bromodichloromethane	2.37E-15	9.92E-13	3.10E-11	1.94E-13	3.22E-11	
74-83-9	bromomethane	8.81E-17	2.58E-13	1.84E-10	2.38E-13	1.84E-10	3.43E-07
75-15-0	carbon disulfide	3.26E-18	1.22E-15	4.62E-12	4.48E-14	4.66E-12	9.41E-10
56-23-5	carbon tetrachloride	4.37E-17	7.66E-15	2.49E-11	5.62E-13	2.54E-11	1.84E-08
108-90-7	chlorobenzene	7.06E-17	1.21E-14	5.71E-12	1.20E-13	5.85E-12	6.81E-09
67-66-3	chloroform	4.05E-17	1.93E-14	1.27E-10	6.25E-13	1.28E-10	1.09E-07
74-87-3	chloromethane	1.04E-18	3.60E-15	7.20E-12	1.33E-14	7.21E-12	2.03E-08
542-75-6	cis-1,3-dichloropropene	1.01E-18	2.75E-15	1.14E-12	3.16E-15	1.14E-12	2.06E-08
124-48-1	dibromochloromethane	1.99E-14	6.81E-12	5.17E-11	4.07E-13	5.89E-11	
75-71-8	dichlorodifluoromethane	6.43E-18	2.42E-15	1.56E-13	1.42E-15	1.59E-13	8.71E-09
84-74-2	di-n-butyl phthalate	9.73E-12	1.26E-10	5.01E-10	1.35E-09	1.99E-09	
100-41-4	ethylbenzene	5.35E-18	6.41E-16	6.40E-13	2.15E-14	6.63E-13	4.35E-10
76-13-1	Freon 113	3.41E-22	3.53E-20	1.29E-15	6.00E-17	1.35E-15	3.01E-11
505-60-2	H	2.43E-13	6.85E-11	2.12E-07	5.07E-09	2.18E-07	9.45E-06
110-54-3	hexane	3.17E-21	1.26E-19	1.44E-15	3.03E-16	1.75E-15	1.09E-09
75-09-2	methylene chloride	3.53E-18	2.60E-14	2.84E-11	4.38E-14	2.84E-11	7.20E-09
100-42-5	styrene	1.27E-15	1.55E-13	5.66E-13	1.55E-14	7.37E-13	3.10E-10
127-18-4	tetrachloroethene	2.33E-17	2.91E-15	6.00E-12	4.13E-13	6.41E-12	9.90E-09
108-88-3	toluene	2.03E-18	3.96E-16	5.42E-13	9.18E-15	5.51E-13	5.18E-11
10061-02-6	trans-1,3-dichloropropene	4.23E-17	1.33E-14	4.06E-12	3.37E-14	4.10E-12	4.08E-09
79-01-6	trichloroethene	4.98E-16	1.39E-13	1.59E-10	1.67E-12	1.60E-10	1.97E-07
75-69-4	trichlorofluoromethane	3.91E-20	9.81E-18	6.80E-14	1.06E-15	6.90E-14	6.49E-10
75-01-4	vinyl chloride	4.57E-18	2.41E-14	1.84E-11	4.30E-14	1.85E-11	5.08E-09
1330-20-7	xylenes	3.71E-17	3.67E-15	9.07E-13	3.67E-14	9.47E-13	1.04E-08
51207-31-9	2,3,7,8-TCDF						
7487-94-7	mercuric chloride						
7439-97-6	elemental mercury						6.61E-07
TOTAL		**3.69E-11**	**4.71E-09**	**2.18E-07**	**6.58E-09**	**2.30E-07**	**1.12E-05**

COPC INTAKE AND NONCANCER HAZARD ESTIMATES
SDC TECHNOLOGY
(Farmer)

CAS No.	COPC Name	Isoil	Iproduce	Idw	Ibeef	Imilk	Ipork	Iegg
		mg/kg/day	mg/kg/day	mg/kg/day	mg/kg/day	mg/kg/day	mg/kg/day	mg/kg/day
71-55-6	1,1,1-trichloroethane	4.53E-19	1.30E-11	4.06E-13	2.14E-11	7.63E-11	5.05E-13	1.79E-19
75-34-3	1,1-dichloroethane	1.48E-21	5.51E-18	2.51E-14	6.34E-18	2.27E-17	2.61E-19	5.01E-22
75-35-4	1,1-dichloroethene	8.02E-22	2.02E-18	7.23E-15	4.19E-18	1.50E-17	1.71E-19	2.97E-22
107-06-2	1,2-dichloroethane	5.92E-21	5.32E-16	1.29E-13	1.07E-17	3.86E-17	4.80E-19	1.77E-21
78-87-5	1,2-dichloropropane	1.88E-20	4.60E-17	6.37E-14	3.56E-17	1.28E-16	1.63E-18	6.78E-21
106-99-0	1,3-butadiene	2.07E-21	1.80E-16	7.92E-15	1.31E-15	4.68E-15	4.98E-17	7.42E-22
78-93-3	2-butanone	6.27E-17	5.83E-13	1.10E-11	5.64E-16	2.29E-15	1.22E-16	2.47E-18
67-64-1	acetone	2.66E-17	4.10E-13	1.78E-11	6.57E-17	2.66E-16	1.42E-17	2.86E-19
71-43-2	benzene	1.10E-20	2.47E-17	4.19E-14	3.15E-17	1.13E-16	1.36E-18	4.06E-21
65-85-0	benzoic acid	1.01E-14	5.10E-11	7.76E-10	3.85E-14	1.46E-13	4.88E-15	8.41E-17
100-51-6	benzyl alcohol	4.36E-15	6.42E-11	1.76E-10	2.46E-13	9.85E-13	4.92E-14	9.78E-16
117-81-7	bis(2-ethylhexyl)-phthalate	5.93E-14	2.46E-10	5.34E-12	2.15E-08	7.68E-08	8.10E-10	1.61E-14
75-27-4	bromodichloromethane	5.29E-18	1.03E-14	2.89E-13	6.34E-16	2.46E-15	1.04E-16	1.96E-18
74-83-9	bromomethane	1.38E-20	3.51E-16	1.20E-13	2.94E-18	1.09E-17	2.54E-19	3.49E-21
75-15-0	carbon disulfide	3.64E-20	6.51E-17	2.16E-13	1.43E-17	5.26E-17	1.10E-18	1.38E-20
56-23-5	carbon tetrachloride	1.95E-20	2.98E-17	4.64E-14	3.06E-16	1.10E-15	1.20E-17	7.82E-21
108-90-7	chlorobenzene	1.58E-19	1.49E-16	5.34E-14	4.71E-16	1.69E-15	2.04E-17	6.31E-20
67-66-3	chloroform	4.52E-20	1.45E-16	5.95E-13	3.42E-16	1.22E-15	1.37E-17	1.63E-20
74-87-3	chloromethane	3.01E-21	1.06E-16	8.74E-14	5.73E-19	2.10E-18	4.06E-20	4.61E-22
542-75-6	cis-1,3-dichloropropene	3.37E-21	8.38E-17	1.59E-14	1.27E-18	4.67E-18	9.14E-20	1.06E-21
124-48-1	dibromochloromethane	4.46E-17	6.98E-14	4.83E-13	4.23E-15	1.68E-14	8.46E-16	1.69E-17
75-71-8	dichlorodifluoromethane	1.44E-19	2.48E-16	1.45E-14	1.30E-17	5.21E-17	2.69E-18	5.41E-20
84-74-2	di-n-butyl phthalate	1.09E-13	2.86E-11	2.34E-11	2.10E-09	7.53E-09	8.11E-11	3.23E-14
100-41-4	ethylbenzene	5.98E-20	5.98E-17	2.99E-14	8.04E-16	2.88E-15	3.15E-17	2.36E-20
76-13-1	Freon 113	1.14E-21	6.41E-15	1.81E-14	2.16E-13	7.73E-13	8.21E-15	4.51E-22
505-60-2	H	1.90E-19	7.54E-16	6.94E-13	7.01E-15	2.50E-14	2.69E-16	7.45E-20
110-54-3	hexane	3.90E-21	7.18E-19	7.42E-15	5.30E-19	1.93E-18	6.86E-20	1.38E-20
75-09-2	methylene chloride	2.37E-20	2.23E-15	7.94E-13	2.63E-17	9.48E-17	1.26E-18	6.39E-21
100-42-5	styrene	2.84E-17	1.58E-14	5.28E-14	3.52E-15	1.35E-14	5.82E-16	1.13E-17
127-18-4	tetrachloroethene	2.60E-20	3.91E-17	2.80E-14	8.97E-16	3.21E-15	3.45E-17	9.93E-21
108-88-3	toluene	1.81E-20	2.35E-17	2.02E-14	1.37E-16	4.89E-16	5.48E-18	7.27E-21
10061-02-6	trans-1,3-dichloropropene	1.42E-19	2.11E-16	5.68E-14	1.07E-16	3.68E-16	6.06E-18	5.46E-20
79-01-6	trichloroethene	1.67E-20	2.48E-17	2.22E-14	4.53E-17	1.63E-16	1.99E-18	6.53E-21
75-69-4	trichlorofluoromethane	1.31E-21	2.04E-18	9.52E-15	7.76E-18	2.78E-17	3.16E-19	5.18E-22
75-01-4	vinyl chloride	1.53E-21	6.53E-17	2.58E-14	4.64E-19	1.71E-18	3.54E-20	4.37E-22
1330-20-7	xylenes	8.28E-19	4.58E-16	8.47E-14	2.87E-15	1.03E-14	1.22E-16	3.26E-19
51207-31-9	2,3,7,8-TCDF	5.39E-19	1.59E-16	3.25E-18	1.42E-14	5.09E-14	5.43E-16	1.06E-19
7487-94-7	mercuric chloride							
7439-97-6	elemental mercury	6.93E-17		1.20E-14				
TOTAL		**N/A**	**N/A**	**N/A**	**N/A**	**N/A**	**N/A**	**N/A**

COPC INTAKE AND NONCANCER HAZARD ESTIMATES
SDC TECHNOLOGY
(Farmer)

CAS No.	COPC Name	Ichicken mg/kg/day	I_oral mg/kg/day	I_inh mg/kg/day	I_teq mg/kg/day	HQ_soil	HQ_produce	HQ_dw
71-55-6	1,1,1-trichloroethane	2.76E-19	1.12E-10	1.99E-10		2.17E-19	6.21E-12	1.95E-13
75-34-3	1,1-dichloroethane	7.71E-22	2.51E-14	9.56E-11		1.42E-20	5.28E-17	2.41E-13
75-35-4	1,1-dichloroethene	4.58E-22	7.25E-15	8.77E-11		1.54E-20	3.87E-17	1.39E-13
107-06-2	1,2-dichloroethane	2.73E-21	1.29E-13	9.68E-11		2.84E-19	2.55E-14	6.17E-12
78-87-5	1,2-dichloropropane	1.04E-20	6.39E-14	1.17E-10		2.00E-19	4.90E-16	6.78E-13
106-99-0	1,3-butadiene	1.15E-21	1.41E-14	8.38E-11				
78-93-3	2-butanone	3.80E-18	1.16E-11	9.98E-10		1.00E-16	9.32E-13	1.76E-11
67-64-1	acetone	4.40E-19	1.82E-11	1.49E-09		2.84E-17	4.37E-13	1.89E-11
71-43-2	benzene	6.26E-21	4.21E-14	1.40E-10		2.63E-18	5.92E-15	1.01E-11
65-85-0	benzoic acid	1.30E-16	8.27E-10	4.89E-09		2.43E-15	1.22E-11	1.86E-10
100-51-6	benzyl alcohol	1.51E-15	2.41E-10	4.56E-10		4.19E-14	6.16E-10	1.69E-09
117-81-7	bis(2-ethylhexyl)-phthalate	2.47E-14	9.93E-08	7.33E-10		2.84E-12	1.18E-08	2.56E-10
75-27-4	bromodichloromethane	3.02E-18	3.03E-13	2.62E-10		2.54E-16	4.95E-13	1.39E-11
74-83-9	bromomethane	5.38E-21	1.21E-13	4.88E-10		9.44E-18	2.41E-13	8.23E-11
75-15-0	carbon disulfide	2.12E-20	2.16E-13	1.87E-10		3.49E-19	6.24E-16	2.07E-12
56-23-5	carbon tetrachloride	1.20E-20	4.79E-14	5.24E-10		4.69E-18	7.15E-15	1.11E-11
108-90-7	chlorobenzene	9.72E-20	5.57E-14	9.70E-11		7.56E-18	7.13E-15	2.56E-12
67-66-3	chloroform	2.51E-20	5.96E-13	1.53E-09		4.33E-18	1.39E-14	5.70E-11
74-87-3	chloromethane	7.09E-22	8.75E-14	5.21E-10		1.11E-19	3.92E-15	3.22E-12
542-75-6	cis-1,3-dichloropropene	1.63E-21	1.60E-14	1.17E-10		1.08E-19	2.68E-15	5.10E-13
124-48-1	dibromochloromethane	2.61E-17	5.75E-13	1.91E-10		2.14E-15	3.35E-12	2.31E-11
75-71-8	dichlorodifluoromethane	8.33E-20	1.48E-14	2.48E-10		6.89E-19	1.19E-15	6.96E-14
84-74-2	di-n-butyl phthalate	4.97E-14	9.77E-09	4.93E-10		1.04E-12	2.74E-10	2.24E-10
100-41-4	ethylbenzene	3.63E-20	3.37E-14	1.24E-10		5.73E-19	5.73E-16	2.87E-13
76-13-1	Freon 113	6.94E-22	1.02E-12	2.57E-10		3.65E-23	2.05E-16	5.77E-16
505-60-2	H	1.15E-19	7.28E-13	5.65E-11		2.61E-14	1.03E-10	9.51E-08
110-54-3	hexane	2.13E-21	7.42E-15	2.17E-10		3.40E-22	6.26E-20	6.47E-16
75-09-2	methylene chloride	9.84E-21	7.97E-13	1.23E-09		3.78E-19	3.56E-14	1.27E-11
100-42-5	styrene	1.74E-17	8.63E-14	8.81E-11		1.36E-16	7.58E-14	2.53E-13
127-18-4	tetrachloroethene	1.53E-20	3.22E-14	1.13E-10		2.49E-18	3.75E-15	2.68E-12
108-88-3	toluene	1.12E-20	2.09E-14	7.37E-11		2.17E-19	2.81E-16	2.43E-13
10061-02-6	trans-1,3-dichloropropene	8.41E-20	5.75E-14	1.24E-10		4.53E-18	6.74E-15	1.82E-12
79-01-6	trichloroethene	1.01E-20	2.25E-14	1.12E-10		5.33E-17	7.94E-14	7.10E-11
75-69-4	trichlorofluoromethane	7.98E-22	9.56E-15	1.29E-10		4.19E-21	6.51E-18	3.04E-14
75-01-4	vinyl chloride	6.73E-22	2.58E-14	1.44E-10		4.90E-19	2.09E-14	8.23E-12
1330-20-7	xylenes	5.01E-19	9.85E-14	2.97E-10		3.97E-18	2.20E-15	4.06E-13
51207-31-9	2,3,7,8-TCDF	1.63E-19	6.58E-14	2.99E-16	6.61E-15			
7487-94-7	mercuric chloride							
7439-97-6	elemental mercury		1.20E-14	5.64E-11				
TOTAL		**N/A**	**N/A**	**N/A**	**N/A**	**3.96E-12**	**1.28E-08**	**9.78E-08**

COPC INTAKE AND NONCANCER HAZARD ESTIMATES
SDC TECHNOLOGY
(Farmer)

CAS No.	COPC Name	HQ_beef	HQ_milk	HQ_pork	HQ_egg	HQ_chicken	HQ_oral	HQ_inhalation
71-55-6	1,1,1-trichloroethane	1.03E-11	3.66E-11	2.42E-13	8.58E-20	1.32E-19	5.35E-11	1.40E-10
75-34-3	1,1-dichloroethane	6.08E-17	2.18E-16	2.50E-18	4.80E-21	7.39E-21	2.41E-13	6.85E-10
75-35-4	1,1-dichloroethene	8.03E-17	2.88E-16	3.28E-18	5.70E-21	8.78E-21	1.39E-13	1.54E-09
107-06-2	1,2-dichloroethane	5.15E-16	1.85E-15	2.30E-17	8.51E-20	1.31E-19	6.20E-12	6.94E-08
78-87-5	1,2-dichloropropane	3.79E-16	1.36E-15	1.73E-17	7.22E-20	1.11E-19	6.81E-13	1.02E-07
106-99-0	1,3-butadiene							1.47E-07
78-93-3	2-butanone	9.02E-16	3.65E-15	1.95E-16	3.94E-18	6.07E-18	1.85E-11	7.01E-10
67-64-1	acetone	7.00E-17	2.83E-16	1.51E-17	3.04E-19	4.69E-19	1.94E-11	1.66E-09
71-43-2	benzene	7.54E-15	2.71E-14	3.26E-16	9.74E-19	1.50E-18	1.01E-11	1.64E-08
65-85-0	benzoic acid	9.23E-15	3.51E-14	1.17E-15	2.02E-17	3.11E-17	1.98E-10	
100-51-6	benzyl alcohol	2.36E-12	9.44E-12	4.72E-13	9.38E-15	1.44E-14	2.32E-09	
117-81-7	bis(2-ethylhexyl)-phthalate	1.03E-06	3.68E-06	3.88E-08	7.70E-13	1.19E-12	4.76E-06	
75-27-4	bromodichloromethane	3.04E-14	1.18E-13	4.97E-15	9.41E-17	1.45E-16	1.45E-11	
74-83-9	bromomethane	2.02E-15	7.48E-15	1.74E-16	2.39E-18	3.68E-18	8.26E-11	3.43E-07
75-15-0	carbon disulfide	1.37E-16	5.04E-16	1.06E-17	1.32E-19	2.03E-19	2.07E-12	9.41E-10
56-23-5	carbon tetrachloride	7.34E-14	2.63E-13	2.87E-15	1.87E-18	2.89E-18	1.15E-11	1.84E-08
108-90-7	chlorobenzene	2.26E-14	8.10E-14	9.78E-16	3.02E-18	4.66E-18	2.67E-12	6.81E-09
67-66-3	chloroform	3.28E-14	1.17E-13	1.31E-15	1.56E-18	2.41E-18	5.72E-11	1.09E-07
74-87-3	chloromethane	2.11E-17	7.75E-17	1.50E-18	1.70E-20	2.62E-20	3.23E-12	2.03E-08
542-75-6	cis-1,3-dichloropropene	4.07E-17	1.49E-16	2.92E-18	3.38E-20	5.20E-20	5.12E-13	2.06E-08
124-48-1	dibromochloromethane	2.03E-13	8.04E-13	4.06E-14	8.13E-16	1.25E-15	2.75E-11	
75-71-8	dichlorodifluoromethane	6.26E-17	2.50E-16	1.29E-17	2.59E-19	3.99E-19	7.11E-14	8.71E-09
84-74-2	di-n-butyl phthalate	2.02E-08	7.22E-08	7.78E-10	3.09E-13	4.76E-13	9.36E-08	
100-41-4	ethylbenzene	7.71E-15	2.76E-14	3.02E-16	2.26E-19	3.48E-19	3.23E-13	4.35E-10
76-13-1	Freon 113	6.90E-15	2.47E-14	2.62E-16	1.44E-23	2.22E-23	3.26E-14	3.01E-11
505-60-2	H	9.60E-10	3.43E-09	3.69E-11	1.02E-14	1.57E-14	9.97E-08	9.45E-06
110-54-3	hexane	4.62E-20	1.68E-19	5.98E-21	1.20E-21	1.86E-22	6.47E-16	1.09E-09
75-09-2	methylene chloride	4.20E-16	1.51E-15	2.01E-17	1.02E-19	1.57E-19	1.27E-11	7.20E-09
100-42-5	styrene	1.69E-14	6.46E-14	2.79E-15	5.41E-17	8.33E-17	4.14E-13	3.10E-10
127-18-4	tetrachloroethene	8.60E-14	3.08E-13	3.31E-15	9.52E-19	1.47E-18	3.09E-12	9.90E-09
108-88-3	toluene	1.64E-15	5.87E-15	6.57E-17	8.71E-20	1.34E-19	2.50E-13	5.18E-11
10061-02-6	trans-1,3-dichloropropene	3.41E-15	1.18E-14	1.94E-16	1.75E-18	2.69E-18	1.84E-12	4.08E-09
79-01-6	trichloroethene	1.45E-13	5.21E-13	6.35E-15	2.09E-17	3.21E-17	7.18E-11	1.97E-07
75-69-4	trichlorofluoromethane	2.48E-17	8.89E-17	1.01E-18	1.66E-21	2.55E-21	3.06E-14	6.49E-10
75-01-4	vinyl chloride	1.48E-16	5.45E-16	1.13E-17	1.40E-19	2.15E-19	8.26E-12	5.08E-09
1330-20-7	xylenes	1.38E-14	4.94E-14	5.84E-16	1.56E-18	2.40E-18	4.72E-13	1.04E-08
51207-31-9	2,3,7,8-TCDF							
7487-94-7	mercuric chloride							
7439-97-6	elemental mercury							6.61E-07
TOTAL		**1.05E-06**	**3.76E-06**	**3.96E-08**	**1.10E-12**	**1.69E-12**	**4.96E-06**	**1.12E-05**

COPC INTAKE AND NONCANCER HAZARD ESTIMATES
SDC TECHNOLOGY
(Farmer Child)

CAS No.	COPC Name	Isoil mg/kg/day	Iproduce mg/kg/day	Idw mg/kg/day	Ibeef mg/kg/day	Imilk mg/kg/day	Ipork mg/kg/day	Iegg mg/kg/day
71-55-6	1,1,1-trichloroethane	4.23E-18	3.11E-11	9.07E-13	1.32E-11	1.27E-10	3.86E-13	1.29E-19
75-34-3	1,1-dichloroethane	1.38E-20	1.31E-17	5.60E-14	3.90E-18	3.77E-17	1.99E-19	3.61E-22
75-35-4	1,1-dichloroethene	7.48E-21	4.84E-18	1.61E-14	2.57E-18	2.49E-17	1.31E-19	2.14E-22
107-06-2	1,2-dichloroethane	5.53E-20	1.13E-15	2.87E-13	6.60E-18	6.41E-17	3.67E-19	1.28E-21
78-87-5	1,2-dichloropropane	1.75E-19	1.10E-16	1.42E-13	2.19E-17	2.13E-16	1.24E-18	4.88E-21
106-99-0	1,3-butadiene	1.93E-20	4.33E-16	1.77E-14	8.06E-16	7.76E-15	3.80E-17	5.34E-22
78-93-3	2-butanone	5.85E-16	1.28E-12	2.46E-11	3.47E-16	3.79E-15	9.32E-17	1.78E-18
67-64-1	acetone	2.49E-16	8.13E-13	3.97E-11	4.04E-17	4.41E-16	1.08E-17	2.06E-19
71-43-2	benzene	1.02E-19	5.91E-17	9.37E-14	1.93E-17	1.87E-16	1.04E-18	2.93E-21
65-85-0	benzoic acid	9.47E-14	1.04E-10	1.73E-09	2.37E-14	2.43E-13	3.73E-15	6.06E-17
100-51-6	benzyl alcohol	4.07E-14	1.29E-10	3.93E-10	1.51E-13	1.63E-12	3.76E-14	7.04E-16
117-81-7	bis(2-ethylhexyl)-phthalate	5.53E-13	5.90E-10	1.19E-11	1.32E-08	1.27E-07	6.18E-10	1.16E-14
75-27-4	bromodichloromethane	4.94E-17	2.47E-14	6.46E-13	3.90E-16	4.09E-15	7.91E-17	1.41E-18
74-83-9	bromomethane	1.29E-19	7.34E-16	2.68E-13	1.81E-18	1.81E-17	1.94E-19	2.51E-21
75-15-0	carbon disulfide	3.40E-19	1.54E-16	4.82E-13	8.80E-18	8.73E-17	8.41E-19	9.90E-21
56-23-5	carbon tetrachloride	1.82E-19	7.04E-17	1.04E-13	1.88E-16	1.82E-15	9.13E-18	5.63E-21
108-90-7	chlorobenzene	1.47E-18	3.50E-16	1.19E-13	2.89E-16	2.80E-15	1.56E-17	4.54E-20
67-66-3	chloroform	4.22E-19	3.47E-16	1.33E-12	2.10E-16	2.03E-15	1.04E-17	1.17E-20
74-87-3	chloromethane	2.81E-20	2.24E-16	1.95E-13	3.52E-19	3.49E-18	3.10E-20	3.32E-22
542-75-6	cis-1,3-dichloropropene	3.15E-20	1.68E-16	3.56E-14	7.82E-19	7.74E-18	6.98E-20	7.61E-22
124-48-1	dibromochloromethane	4.16E-16	1.69E-13	1.08E-12	2.60E-15	2.78E-14	6.46E-16	1.22E-17
75-71-8	dichlorodifluoromethane	1.34E-18	6.00E-16	3.24E-14	8.02E-18	8.64E-17	2.05E-18	3.89E-20
84-74-2	di-n-butyl phthalate	1.01E-12	6.89E-11	5.22E-11	1.29E-09	1.25E-08	6.19E-11	2.32E-14
100-41-4	ethylbenzene	5.58E-19	1.40E-16	6.68E-14	4.94E-16	4.78E-15	2.40E-17	1.70E-20
76-13-1	Freon 113	1.07E-20	1.54E-14	4.03E-14	1.33E-13	1.28E-12	6.27E-15	3.24E-22
505-60-2	H	1.78E-18	1.82E-15	1.55E-12	4.31E-15	4.16E-14	2.06E-16	5.36E-20
110-54-3	hexane	3.64E-20	1.74E-18	1.66E-14	3.26E-19	3.20E-18	5.24E-20	9.92E-21
75-09-2	methylene chloride	2.21E-19	4.59E-15	1.77E-12	1.62E-17	1.57E-16	9.62E-19	4.60E-21
100-42-5	styrene	2.65E-16	3.84E-14	1.18E-13	2.16E-15	2.23E-14	4.45E-16	8.12E-18
127-18-4	tetrachloroethene	2.42E-19	8.70E-17	6.25E-14	5.51E-16	5.33E-15	2.63E-17	7.15E-21
108-88-3	toluene	1.69E-19	5.56E-17	4.52E-14	8.39E-17	8.12E-16	4.19E-18	5.23E-21
10061-02-6	trans-1,3-dichloropropene	1.32E-18	5.13E-16	1.27E-13	6.56E-17	6.11E-16	4.62E-18	3.93E-20
79-01-6	trichloroethene	1.56E-19	5.95E-17	4.96E-14	2.79E-17	2.70E-16	1.52E-18	4.70E-21
75-69-4	trichlorofluoromethane	1.22E-20	4.84E-18	2.13E-14	4.77E-18	4.61E-17	2.41E-19	3.73E-22
75-01-4	vinyl chloride	1.43E-20	1.23E-16	5.75E-14	2.85E-19	2.83E-18	2.71E-20	3.15E-22
1330-20-7	xylenes	7.73E-18	1.11E-15	1.89E-13	1.76E-15	1.71E-14	9.30E-17	2.34E-19
51207-31-9	2,3,7,8-TCDF	5.03E-18	3.82E-16	7.27E-18	8.74E-15	8.44E-14	4.15E-16	7.60E-20
7487-94-7	mercuric chloride							
7439-97-6	elemental mercury	6.47E-16		2.67E-14				
TOTAL		**N/A**	**N/A**	**N/A**	**N/A**	**N/A**	**N/A**	**N/A**

COPC INTAKE AND NONCANCER HAZARD ESTIMATES
SDC TECHNOLOGY
(Farmer Child)

CAS No.	COPC Name	Ichicken mg/kg/day	I_oral mg/kg/day	I_inh mg/kg/day	I_teq mg/kg/day	HQ_soil	HQ_produce	HQ_dw
71-55-6	1,1,1-trichloroethane	1.88E-19	1.72E-10	5.55E-10		2.03E-18	1.49E-11	4.35E-13
75-34-3	1,1-dichloroethane	5.26E-22	5.61E-14	2.67E-10		1.32E-19	1.26E-16	5.37E-13
75-35-4	1,1-dichloroethene	3.12E-22	1.62E-14	2.45E-10		1.43E-19	9.28E-17	3.10E-13
107-06-2	1,2-dichloroethane	1.86E-21	2.88E-13	2.70E-10		2.65E-18	5.43E-14	1.38E-11
78-87-5	1,2-dichloropropane	7.12E-21	1.43E-13	3.26E-10		1.87E-18	1.17E-15	1.52E-12
106-99-0	1,3-butadiene	7.82E-22	2.67E-14	2.34E-10				
78-93-3	2-butanone	2.59E-18	2.59E-11	2.79E-09		9.35E-16	2.05E-12	3.93E-11
67-64-1	acetone	3.00E-19	4.05E-11	4.15E-09		2.65E-16	8.66E-13	4.23E-11
71-43-2	benzene	4.27E-21	9.39E-14	3.92E-10		2.45E-17	1.42E-14	2.25E-11
65-85-0	benzoic acid	8.83E-17	1.84E-09	1.37E-08		2.27E-14	2.49E-11	4.16E-10
100-51-6	benzyl alcohol	1.03E-15	5.24E-10	1.27E-09		3.91E-13	1.24E-09	3.77E-09
117-81-7	bis(2-ethylhexyl)-phthalate	1.69E-14	1.42E-07	2.05E-09		2.65E-11	2.83E-08	5.72E-10
75-27-4	bromodichloromethane	2.06E-18	6.75E-13	7.31E-10		2.37E-15	1.18E-12	3.10E-11
74-83-9	bromomethane	3.67E-21	2.69E-13	1.36E-09		8.81E-17	5.02E-13	1.84E-10
75-15-0	carbon disulfide	1.44E-20	4.82E-13	5.24E-10		3.26E-18	1.48E-15	4.62E-12
56-23-5	carbon tetrachloride	8.21E-21	1.06E-13	1.46E-09		4.37E-17	1.69E-14	2.49E-11
108-90-7	chlorobenzene	6.62E-20	1.23E-13	2.71E-10		7.06E-17	1.68E-14	5.71E-12
67-66-3	chloroform	1.71E-20	1.33E-12	4.26E-09		4.05E-17	3.33E-14	1.27E-10
74-87-3	chloromethane	4.84E-22	1.95E-13	1.46E-09		1.04E-18	8.26E-15	7.20E-12
542-75-6	cis-1,3-dichloropropene	1.11E-21	3.58E-14	3.27E-10		1.01E-18	5.35E-15	1.14E-12
124-48-1	dibromochloromethane	1.78E-17	1.28E-12	5.34E-10		1.99E-14	8.11E-12	5.17E-11
75-71-8	dichlorodifluoromethane	5.68E-20	3.31E-14	6.93E-10		6.43E-18	2.88E-15	1.56E-13
84-74-2	di-n-butyl phthalate	3.39E-14	1.40E-08	1.38E-09		9.73E-12	6.60E-10	5.01E-10
100-41-4	ethylbenzene	2.48E-20	7.22E-14	3.46E-10		5.35E-18	1.35E-15	6.40E-13
76-13-1	Freon 113	4.73E-22	1.48E-12	7.17E-10		3.41E-22	4.92E-16	1.29E-15
505-60-2	H	7.83E-20	1.60E-12	1.58E-10		2.43E-13	2.49E-10	2.12E-07
110-54-3	hexane	1.45E-21	1.66E-14	6.05E-10		3.17E-21	1.51E-19	1.44E-15
75-09-2	methylene chloride	6.71E-21	1.78E-12	3.44E-09		3.53E-18	7.33E-14	2.84E-11
100-42-5	styrene	1.18E-17	1.82E-13	2.46E-10		1.27E-15	1.84E-13	5.66E-13
127-18-4	tetrachloroethene	1.04E-20	6.85E-14	3.15E-10		2.33E-17	8.35E-15	6.00E-12
108-88-3	toluene	7.63E-21	4.61E-14	2.06E-10		2.03E-18	6.66E-16	5.42E-13
10061-02-6	trans-1,3-dichloropropene	5.73E-20	1.28E-13	3.47E-10		4.23E-17	1.64E-14	4.06E-12
79-01-6	trichloroethene	6.86E-21	5.00E-14	3.13E-10		4.98E-16	1.90E-13	1.59E-10
75-69-4	trichlorofluoromethane	5.44E-22	2.13E-14	3.61E-10		3.91E-20	1.55E-17	6.80E-14
75-01-4	vinyl chloride	4.59E-22	5.77E-14	4.04E-10		4.57E-18	3.94E-14	1.84E-11
1330-20-7	xylenes	3.42E-19	2.09E-13	8.30E-10		3.71E-17	5.32E-15	9.07E-13
51207-31-9	2,3,7,8-TCDF	1.11E-19	9.40E-14	8.36E-16	9.48E-15			
7487-94-7	mercuric chloride							
7439-97-6	elemental mercury		2.74E-14	1.58E-10				
TOTAL		**N/A**	**N/A**	**N/A**	**N/A**	**3.69E-11**	**3.05E-08**	**2.18E-07**

COPC INTAKE AND NONCANCER HAZARD ESTIMATES
SDC TECHNOLOGY
(Farmer Child)

CAS No.	COPC Name	HQ_beef	HQ_milk	HQ_pork	HQ_egg	HQ_chicken	HQ_oral	HQ_inhalation
71-55-6	1,1,1-trichloroethane	6.31E-12	6.07E-11	1.85E-13	6.18E-20	9.01E-20	8.26E-11	1.40E-10
75-34-3	1,1-dichloroethane	3.74E-17	3.62E-16	1.91E-18	3.46E-21	5.04E-21	5.38E-13	6.85E-10
75-35-4	1,1-dichloroethene	4.93E-17	4.78E-16	2.51E-18	4.10E-21	5.99E-21	3.10E-13	1.54E-09
107-06-2	1,2-dichloroethane	3.17E-16	3.07E-15	1.76E-17	6.13E-20	8.93E-20	1.38E-11	6.94E-08
78-87-5	1,2-dichloropropane	2.33E-16	2.26E-15	1.32E-17	5.20E-20	7.58E-20	1.52E-12	1.02E-07
106-99-0	1,3-butadiene							1.47E-07
78-93-3	2-butanone	5.54E-16	6.06E-15	1.49E-16	2.84E-18	4.14E-18	4.13E-11	7.01E-10
67-64-1	acetone	4.30E-17	4.70E-16	1.15E-17	2.19E-19	3.20E-19	4.32E-11	1.66E-09
71-43-2	benzene	4.63E-15	4.49E-14	2.49E-16	7.01E-19	1.02E-18	2.25E-11	1.64E-08
65-85-0	benzoic acid	5.68E-15	5.83E-14	8.94E-16	1.45E-17	2.12E-17	4.41E-10	
100-51-6	benzyl alcohol	1.45E-12	1.57E-11	3.60E-13	6.75E-15	9.85E-15	5.03E-09	
117-81-7	bis(2-ethylhexyl)-phthalate	6.33E-07	6.11E-06	2.96E-08	5.55E-13	8.09E-13	6.80E-06	
75-27-4	bromodichloromethane	1.87E-14	1.96E-13	3.79E-15	6.78E-17	9.88E-17	3.24E-11	
74-83-9	bromomethane	1.24E-15	1.24E-14	1.33E-16	1.72E-18	2.51E-18	1.84E-10	3.43E-07
75-15-0	carbon disulfide	8.44E-17	8.37E-16	8.06E-18	9.50E-20	1.38E-19	4.62E-12	9.41E-10
56-23-5	carbon tetrachloride	4.51E-14	4.36E-13	2.19E-15	1.35E-18	1.97E-18	2.54E-11	1.84E-08
108-90-7	chlorobenzene	1.39E-14	1.34E-13	7.47E-16	2.18E-18	3.18E-18	5.88E-12	6.81E-09
67-66-3	chloroform	2.01E-14	1.95E-13	1.00E-15	1.13E-18	1.64E-18	1.28E-10	1.09E-07
74-87-3	chloromethane	1.30E-17	1.29E-16	1.14E-18	1.22E-20	1.78E-20	7.21E-12	2.03E-08
542-75-6	cis-1,3-dichloropropene	2.50E-17	2.47E-16	2.23E-18	2.43E-20	3.55E-20	1.14E-12	2.06E-08
124-48-1	dibromochloromethane	1.25E-13	1.33E-12	3.10E-14	5.85E-16	8.53E-16	6.13E-11	
75-71-8	dichlorodifluoromethane	3.85E-17	4.14E-16	9.83E-18	1.87E-19	2.72E-19	1.59E-13	8.71E-09
84-74-2	di-n-butyl phthalate	1.24E-08	1.20E-07	5.94E-10	2.23E-13	3.25E-13	1.34E-07	
100-41-4	ethylbenzene	4.74E-15	4.58E-14	2.31E-16	1.63E-19	2.37E-19	6.93E-13	4.35E-10
76-13-1	Freon 113	4.24E-15	4.10E-14	2.00E-16	1.04E-23	1.51E-23	4.72E-14	3.01E-11
505-60-2	H	5.90E-10	5.69E-09	2.82E-11	7.35E-15	1.07E-14	2.19E-07	9.45E-06
110-54-3	hexane	2.84E-20	2.79E-19	4.56E-21	8.65E-22	1.27E-22	1.45E-15	1.09E-09
75-09-2	methylene chloride	2.58E-16	2.51E-15	1.54E-17	7.35E-20	1.07E-19	2.84E-11	7.20E-09
100-42-5	styrene	1.04E-14	1.07E-13	2.13E-15	3.89E-17	5.68E-17	8.71E-13	3.10E-10
127-18-4	tetrachloroethene	5.29E-14	5.11E-13	2.52E-15	6.85E-19	9.99E-19	6.57E-12	9.90E-09
108-88-3	toluene	1.01E-15	9.73E-15	5.02E-17	6.27E-20	9.15E-20	5.53E-13	5.18E-11
10061-02-6	trans-1,3-dichloropropene	2.10E-15	1.95E-14	1.48E-16	1.26E-18	1.83E-18	4.09E-12	4.08E-09
79-01-6	trichloroethene	8.91E-14	8.64E-13	4.85E-15	1.50E-17	2.19E-17	1.60E-10	1.97E-07
75-69-4	trichlorofluoromethane	1.52E-17	1.47E-16	7.71E-19	1.19E-21	1.74E-21	6.81E-14	6.49E-10
75-01-4	vinyl chloride	9.11E-17	9.05E-16	8.65E-18	1.01E-19	1.47E-19	1.84E-11	5.08E-09
1330-20-7	xylenes	8.45E-15	8.20E-14	4.46E-16	1.12E-18	1.64E-18	1.00E-12	1.04E-08
51207-31-9	2,3,7,8-TCDF							
7487-94-7	mercuric chloride							
7439-97-6	elemental mercury							6.61E-07
TOTAL		**6.46E-07**	**6.24E-06**	**3.03E-08**	**7.92E-13**	**1.16E-12**	**7.16E-06**	**1.12E-05**

NONCANCER HAZARD ESTIMATES
FOR ACUTE INHALATION EXPOSURE
SDC TECHNOLOGY

CAS No.	COPC Name	Cacute µg/m^3	AHQ_inh
71-55-6	1,1,1-trichloroethane	7.73E-04	1.14E-08
75-34-3	1,1-dichloroethane	8.59E-05	2.86E-11
75-35-4	1,1-dichloroethene	7.88E-05	3.15E-10
107-06-2	1,2-dichloroethane	8.70E-05	4.31E-10
78-87-5	1,2-dichloropropane	1.05E-04	1.05E-10
106-99-0	1,3-butadiene	7.53E-05	5.08E-11
78-93-3	2-butanone	8.97E-04	6.90E-08
67-64-1	acetone	1.34E-03	2.81E-09
71-43-2	benzene	1.26E-04	9.70E-08
65-85-0	benzoic acid	4.43E-03	3.54E-07
100-51-6	benzyl alcohol	4.15E-04	6.92E-10
117-81-7	bis(2-ethylhexyl)-phthalate	2.58E-03	2.58E-07
75-27-4	bromodichloromethane	2.35E-04	5.88E-08
74-83-9	bromomethane	4.38E-04	4.38E-09
75-15-0	carbon disulfide	1.70E-04	2.73E-08
56-23-5	carbon tetrachloride	4.70E-04	2.48E-07
108-90-7	chlorobenzene	8.72E-05	1.90E-09
67-66-3	chloroform	1.37E-03	9.13E-06
74-87-3	chloromethane	4.68E-04	2.34E-09
542-75-6	cis-1,3-dichloropropene	1.05E-04	1.75E-07
124-48-1	dibromochloromethane	1.72E-04	1.38E-09
75-71-8	dichlorodifluoromethane	2.23E-04	1.49E-11
84-74-2	di-n-butyl phthalate	4.74E-04	4.74E-08
100-41-4	ethylbenzene	1.11E-04	7.78E-10
76-13-1	Freon 113	2.31E-04	2.31E-11
505-60-2	H	1.95E-02	3.00E-04
110-54-3	hexane	1.95E-04	1.30E-10
75-09-2	methylene chloride	1.11E-03	7.89E-08
100-42-5	styrene	7.92E-05	3.77E-09
127-18-4	tetrachloroethene	1.01E-04	5.07E-09
108-88-3	toluene	6.62E-05	1.79E-09
10061-02-6	trans-1,3-dichloropropene	1.12E-04	1.49E-09
79-01-6	trichloroethene	1.01E-04	1.44E-10
75-69-4	trichlorofluoromethane	1.16E-04	2.32E-11
75-01-4	vinyl chloride	1.30E-04	7.22E-10
1330-20-7	xylenes	2.67E-04	1.21E-08
51207-31-9	2,3,7,8-TCDF	5.00E-10	8.34E-10
7487-94-7	mercuric chloride		
7439-97-6	elemental mercury	5.07E-05	8.45E-05
TOTAL		**N/A**	**3.95E-04**

PCBs, PCDDs, and PCDFs EXPOSURE ESTIMATES AS 2,3,7,8 TCDD TEQ
SDC TECHNOLOGY

Exposure Scenario	**Location**	**I_teq** mg TEQ/kg/day	**I_teq** pg TEQ/kg/day	**Cbmilk** pg TEQ/kg	**I_bmilk** pg TEQ/kg/day
Adult Resident	Rmax	3.11E-17	3.11E-08	3.44E-04	9.07E-07
Child Resident	Rmax	8.67E-17	8.67E-08		
Fisher	Rmax	4.31E-17	4.31E-08	4.76E-04	1.25E-06
Fisher Child	Rmax	9.51E-17	9.51E-08		
Farmer	Fmax	6.61E-15	6.61E-06	7.31E-02	1.93E-04
Farmer Child	Fmax	9.48E-15	9.48E-06		

SUMMARY OF ESTIMATED
CANCER RISKS AND NONCANCER HAZARDS
SDC TECHNOLOGY

Exposure Scenario	Scenario Location	Cancer Risk (Benchmark = 1E-05)			Total Hazard Index (Benchmark = 0.25)		
		Oral	Inhalation	Total	Oral	Inhalation	Total
Adult Resident	Rmax	2.48E-12	4.62E-10	4.65E-10	0.00000010	0.00001121	0.00001131
Child Resident	Rmax	1.11E-12	9.24E-11	9.35E-11	0.00000022	0.00001121	0.00001144
Fisher	Rmax	2.67E-12	4.62E-10	4.65E-10	0.00000011	0.00001121	0.00001132
Fisher Child	Rmax	1.14E-12	9.24E-11	9.36E-11	0.00000023	0.00001121	0.00001144
Farmer	Fmax	7.65E-10	6.16E-10	1.38E-09	0.00000496	0.00001121	0.00001617
Farmer Child	Fmax	1.64E-10	9.24E-11	2.57E-10	0.00000716	0.00001121	0.00001838
Acute Exposure	Amax	--	--	--	--	0.00039477	--

SUMMARY OF ESTIMATED MAXIMUM
CANCER RISKS AND NONCANCER HAZARDS FOR INDIVIDUAL COPCS AND EXPOSURE PATHWAYS
SDC TECHNOLOGY

Exposure Scenario	Exposure Pathway	Carcinogenic Risk		Non Carcinogenic Hazard	
		Max Cancer Risk	From COPC	Max HQ	From COPC
Adult Resident	inhalation	3.40E-10	H	9.45E-06	H
	oral	2.20E-12	H	9.52E-08	H
	soil	2.85E-16	bis(2-ethylhexyl)-phthalate	2.84E-12	bis(2-ethylhexyl)-phthalate
	produce	1.72E-13	bis(2-ethylhexyl)-phthalate	1.44E-09	bis(2-ethylhexyl)-phthalate
Child Resident	inhalation	6.80E-11	H	9.45E-06	H
	oral	9.82E-13	H	2.13E-07	H
	soil	5.33E-16	bis(2-ethylhexyl)-phthalate	2.65E-11	bis(2-ethylhexyl)-phthalate
	produce	8.26E-14	bis(2-ethylhexyl)-phthalate	3.47E-09	bis(2-ethylhexyl)-phthalate
Fisher	inhalation	3.40E-10	H	9.45E-06	H
	oral	2.36E-12	H	1.02E-07	H
	soil	2.85E-16	bis(2-ethylhexyl)-phthalate	2.84E-12	bis(2-ethylhexyl)-phthalate
	produce	1.72E-13	bis(2-ethylhexyl)-phthalate	1.44E-09	bis(2-ethylhexyl)-phthalate
	fish	1.66E-13	H	7.21E-09	H
Fisher Child	inhalation	6.80E-11	H	9.45E-06	H
	oral	1.01E-12	H	2.18E-07	H
	soil	5.33E-16	bis(2-ethylhexyl)-phthalate	2.65E-11	bis(2-ethylhexyl)-phthalate
	produce	8.26E-14	bis(2-ethylhexyl)-phthalate	3.47E-09	bis(2-ethylhexyl)-phthalate
	fish	2.34E-14	H	5.07E-09	H

SUMMARY OF ESTIMATED MAXIMUM
CANCER RISKS AND NONCANCER HAZARDS FOR INDIVIDUAL COPCS AND EXPOSURE PATHWAYS
SDC TECHNOLOGY

Exposure Scenario	Exposure Pathway	Carcinogenic Risk		Non Carcinogenic Hazard	
		Max Cancer Risk	From COPC	Max HQ	From COPC
Farmer	inhalation	4.54E-10	H	9.45E-06	H
	oral	7.62E-10	bis(2-ethylhexyl)-phthalate	4.76E-06	bis(2-ethylhexyl)-phthalate
	soil	6.23E-18	bis(2-ethylhexyl)-phthalate	2.84E-12	bis(2-ethylhexyl)-phthalate
	produce	1.87E-12	bis(2-ethylhexyl)-phthalate	1.18E-08	bis(2-ethylhexyl)-phthalate
	beef	1.65E-10	bis(2-ethylhexyl)-phthalate	1.03E-06	bis(2-ethylhexyl)-phthalate
	milk	5.89E-10	bis(2-ethylhexyl)-phthalate	3.68E-06	bis(2-ethylhexyl)-phthalate
	pork	6.21E-12	bis(2-ethylhexyl)-phthalate	3.88E-08	bis(2-ethylhexyl)-phthalate
	egg	1.69E-18	bis(2-ethylhexyl)-phthalate	7.70E-13	bis(2-ethylhexyl)-phthalate
	chicken	2.60E-18	bis(2-ethylhexyl)-phthalate	1.19E-12	bis(2-ethylhexyl)-phthalate
Farmer Child	inhalation	6.80E-11	H	9.45E-06	H
	oral	1.63E-10	bis(2-ethylhexyl)-phthalate	6.80E-06	bis(2-ethylhexyl)-phthalate
	soil	5.33E-16	bis(2-ethylhexyl)-phthalate	2.65E-11	bis(2-ethylhexyl)-phthalate
	produce	6.78E-13	bis(2-ethylhexyl)-phthalate	2.83E-08	bis(2-ethylhexyl)-phthalate
	beef	1.52E-11	bis(2-ethylhexyl)-phthalate	6.33E-07	bis(2-ethylhexyl)-phthalate
	milk	1.47E-10	bis(2-ethylhexyl)-phthalate	6.11E-06	bis(2-ethylhexyl)-phthalate
	pork	7.11E-13	bis(2-ethylhexyl)-phthalate	2.96E-08	bis(2-ethylhexyl)-phthalate
	egg	1.11E-17	bis(2-ethylhexyl)-phthalate	5.55E-13	bis(2-ethylhexyl)-phthalate
	chicken	1.62E-17	bis(2-ethylhexyl)-phthalate	8.09E-13	bis(2-ethylhexyl)-phthalate
Acute Exposure	inh	NA	NA	3.00E-04	H

FRANKLIN
engineering group, inc.

381 Riverside Drive, Suite 200
Franklin, TN 37064
615/591-0058 voice
615/591-8979 fax

"This document has been reviewed by RWR and no OPSEC-sensitive information was found.

ADDENDUM
TO
MULTIPATHWAY HUMAN HEALTH
RISK ASSESSMENT REPORT
FOR
EXPLOSIVE DESTRUCTION TECHNOLOGY (EDT) ALTERNATIVES
AT
BLUE GRASS CHEMICAL AGENT-DESTRUCTION PILOT PLANT

[REVISED EDS MODELING]

Prepared for:
Bechtel Parsons Blue Grass
830 Eastern Bypass
Suite 106
Richmond, Kentucky

Prepared by:
Franklin Engineering Group, Inc.
Franklin, Tennessee

This document has been reviewed for ITAR/EAR and no ITAR/EAR sensitive information was found.

March 2013

TABLE OF CONTENTS

1.0 INTRODUCTION AND EXECUTIVE SUMMARY 1
2.0 REVISED FACILITY DESCRIPTION 4
2.1 EDT Alternatives 4
2.2 EDT OPERATIONS 4
2.2.1 Feed Material Assumptions 4
2.2.2 Duration of EDS Operations 4
2.3 EDS Location 4
2.4 EDT Emission Sources 6
2.5 Estimated Emission Rates 6
3.0 AIR DISPERSION AND DEPOSITION MODELING 8
3.1 Model Description 8
3.2 Emission Source Characterization 8
3.2.1 Stack Coordinates and Base Elevation 8
3.2.2 Stack Height and Building Wake Effects 8
3.2.3 Stack Gas Temperature, Flowrate and Velocity 11
3.2.4 Modeled Emission Rate and Particle-Size Distribution 11
3.3 Urban/Rural 11
3.4 Deposition Parameters 11
3.5 Meteorological Data 11
3.6 Receptor Grid and Terrain 11
3.7 Chemical-Specific Parameters 11
3.8 Modeling Results 13
4.0 EXPOSURE SCENARIO IDENTIFICATION 20
4.1 Use of HHRAP Recommended Default Model Parameters 20
4.2 Special On-site and Off-site Water Body Considerations 20
4.3 Exposure Period Considerations 20
5.0 TOXICITY DATA 21
6.0 RISK RESULTS 22
6.1 Characterization of Carcinogenic Health Effects 22
6.2 Characterization of Non-Carcinogenic Health Effects 23
6.3 Characterization of Acute Health Effects 23
6.4 Results for EDS Technology 23
6.5 Summary and Cumulative EDS and BGCAPP Risk and Hazard Results 24
7.0 UNCERTAINTY IN HUMAN HEALTH RISK ASSESSMENT 30
8.0 CONCLUSION/RECOMMENDATION 31

LIST OF TABLES

Table 1-1 Summary Results of Multi-Pathway Human Health Risk Assessment 3
Table 2-1 BGCAPP EDT Processing Rates 5
Table 2-2 Source Characteristics Required for Air Modeling 7
Table 3-1 Modeling Run Types and Counts 14
Table 3-2 Particle/Particle-Bound Phase Modeling Maxima Summary 15
Table 3-3 Vapor Phase Modeling Maxima Summary – Concentration 16
Table 3-4 Vapor Phase Modeling Maxima Summary - Total Deposition 17
Table 3-5 Vapor Phase Modeling Maxima Summary - Dry Deposition 18
Table 3-6 Vapor Phase Modeling Maxima Summary - Wet Deposition 19
Table 6-1 Total Carcinogenic Risk and Non-carcinogenic Hazard – EDS Technology 25
Table 6-2 Maximum Impact COPC Carcinogenic Risk and Non-carcinogenic Hazard – EDS Technology 26
Table 6-3 Summary of Incremental EDT Impacts and Cumulative BGCAPP Impacts 29

LIST OF FIGURES

Figure 3-1 BGAD Property Location 9
Figure 3-2 BGAD Source and Building Locations 10
Figure 3-3 BGAD Receptor Grid, Revised for Modified EDS Location 12

APPENDICES

Appendix 1 Risk Assessment Calculations – EDS Technology

DEFINITIONS

AERMAP – AERMOD's terrain preprocessor
AERMOD – American Meteorological Society/Environmental Protection Agency Regulatory Model
AMS – American Meteorological Society
BGAD – Blue Grass Army Depot
BGCAPP – Blue Grass Chemical Agent Destruction Pilot Plant
COPC – Constituent of Potential Concern
CSF – Cancer Slope Factor
DAVINCH – Detonation of Ammunition in a Vacuum Integrated Chamber
EA – Environmental Assessment
EDS – Explosive Destruction System
EDT – Explosive Destruction Technology
EPA – Environmental Protection Agency
Final HHRAP – 2005 Human Health Risk Assessment Protocol Guidance for Hazardous Waste Combustion Facilities
HI – Hazard Index
HIA – Acute Hazard Index
HQ – Hazard Quotient
HQA – Acute Hazard Quotient
IRIS – Integrated Risk Information System
ISCST3 – Industrial Source Complex Short Term, Ver. 3 Air Model
MPHHRA – Multi-Pathway Human Health Risk Assessment
NAD27 – North American Datum 1927
OEHHA – California EPA - Office of Environmental Health Hazard Assessment
OSWER – Office of Solid Waste and Emergency Response
RfC – Reference Concentration
RfD – Reference Dose toxicity value
RSL – USEPA Risk Screening Level
SDC – Static Detonation Chamber
SDC1 – SDC process stack source
SDC2 – SDC building vent source
SPB – Supercritical Water Oxidation Processing Building
TDC – Transportable Detonation Chamber
TEEL-1 – United States Department of Energy Temporary Emergency Exposure Limits.
UTM – Universal Transverse Mercator

1.0 INTRODUCTION AND EXECUTIVE SUMMARY

In January 2013, a screening-level Multi-Pathway Human Health Risk Assessment (MPHHRA) was performed to estimate the potential impacts of the limited duration operation of an Explosive Destruction Technology (EDT) facility designed to destroy chemical munitions stored at Blue Grass Army Depot (BGAD) Kentucky to human health. The MPHHRA generally followed the U.S. EPA guidance document, Human Health Risk Assessment Protocol for Hazardous Waste Combustion Facilities, Final (September 2005) and EPA's Guideline on Air Quality Models (40 CFR, Part 51, Appendix W). Four alternatives were evaluated for destruction of a portion of the stockpile at the Blue Grass Chemical Agent Destruction Pilot Plant (BGCAPP). Each of the four different EDT options was considered independently in the MPHHRA.

The MPHHRA results were previously provided to document the comparison of threshold toxicological factors to estimated emissions for the four treatment technologies being evaluated. The results were included in an Environmental Assessment being developed by Oak Ridge National Laboratory (ORNL). This Addendum addresses one of the technologies, the Explosive Destruction System (EDS). Changes were made to the operating schedule, location, and number of units for this technology after the MPHHRA was published. This Addendum documents the nature of those changes and the overall impact of the changes on the risk assessment results. The results of the procedures and calculations presented in this Addendum will also become part of the EA.

No changes were made in this Addendum to any assumptions, calculations, or conclusions related to the other three EDT Technologies. The methodologies employed to perform risk and hazard calculations were identical to those discussed in the MPHHRA unless specifically called out in this Addendum.

- Emission rates of all compounds estimated to be emitted by the EDS were identical to those used in the MPHHRA,
- All compounds specified as potential emissions from the EDS in the MPHHRA were identical to those specified in this Addendum,
- Receptors placed on nearby water bodies were unchanged in this Addendum,

Changes made to the protocol for assessment of risk for the EDS technology include:

- The site evaluated for construction of the EDS facility is of the site specified by the other three technologies.

- Seven EDS units were utilized for the evaluation in this Addendum, rather than fourteen, as specified by the MPHHRA. However, the total hours of operation for the EDS facility as a whole are unchanged. The seven units are designated for 24 hours/7 day per week operation, as opposed to fourteen units operated at 12 hours/7 days per week.

The results of the evaluation performed as part of this Addendum are summarized in Table 1-1 and demonstrate that emissions from the EDS alternative meet acceptable risk and hazard thresholds. A summary of the EDS results, compared to the other technology alternatives in the MPHHRA as follows:

- A total of 77 COPCs (Constituents of Potential Concern) were identified by the four EDT vendors, published literature, or engineering calculations. Of the 77 COPCs, 26 have carcinogenic toxicity factors, 66 have chronic non-carcinogenic toxicity factors, and 71 have acute toxicity factors.
- The maximum lifetime cancer risk to any human receptor presented by the worst-case EDT option is 4.0 E-08, which is less than 1 % of the acceptable risk level of 1 in 100,000 (i.e., 1.0 E-05). When added to the risk calculated in 2010 for BGCAPP operations, the maximum lifetime cancer risk is only 2 % of the acceptable risk level. Emissions from the TDC alternative result in this lifetime cancer risk for the adult farmer.
- For non-carcinogenic effects, the maximum combined Hazard Index (HI) to any human receptor presented by the worst-case EDT option is 0.00l3, which is less than 1 % of the acceptable level of 0.25. When added to the HI calculated in 2010 for BGCAPP operations, the maximum lifetime HI is 0.0137, only 5 % of the acceptable risk level. This worst-case HI is based on the TDC alternative result for the farmer child exposure scenario.
- The total acute HI (i.e., the hazards associated with short-term emission release events for each COPC that has both a quantified short-term emission rate and an available acute toxicity value) presented by the worst-case EDT option is the TDC alternative, which is less than 1 % of the acceptable level of 0.25. When combined with the BGCAPP acute HI, the worst-case option is about 10 % of the acceptable level.

In summary, the revisions to the EDS alternative have not resulted in risk or hazard greater than acceptable limits. Additionally, the results presented in this addendum related to revised modeling for the EDS alternative do not represent the worst-case EDT option when compared to the previous results from the other three technology options.

Table 1-1
Summary Results of Multi-Pathway Human Health Risk Assessment Including Revised EDS Modeling

Hazard and Risk Characterization from EDT Facility Only									
Exposure Scenario	**Scenario Location**	**Total Cancer Risk (Benchmark = 1E-05)**				**Total Hazard Index (Benchmark = 0.25)**			
		Davinch	EDS	TDC	SDC	Davinch	EDS	TDC	SDC
Adult Resident	Rmax	2.01E-08	5.00E-10	2.42E-08	4.65E-10	0.000681	0.0000139	0.00120	0.000011
Child Resident	Rmax	4.16E-09	1.01E-10	4.89E-09	9.35E-11	0.000710	0.0000141	0.00121	0.000011
Fisher	Rmax	2.01E-08	5.01E-10	2.42E-08	4.65E-10	0.000681	0.0000139	0.00120	0.000011
Fisher Child	Rmax	4.16E-09	1.01E-10	4.89E-09	9.36E-11	0.000710	0.0000141	0.00121	0.000011
Farmer	Fmax	**3.26E-08**	**6.67E-10**	**4.03E-08**	**1.38E-09**	0.000868	0.0000139	0.00125	0.000016
Farmer Child	Fmax	5.43E-09	1.01E-10	6.60E-09	2.57E-10	**0.000985**	**0.0000141**	**0.00129**	**0.000018**
Acute Exposure	Amax	--	--	--	--	0.000246	0.0000124	**0.00083**	0.000395
Worst-Case Hazard and Risk Characterization from EDT Facility and BGCAPP Facility									
Farmer	Fmax	2.13E-07	1.80E-07	**2.20E-07**	1.81E-07				
Farmer Child	Fmax					0.013385	0.0124141	**0.01369**	0.012418
Acute Exposure	Amax	--	--	--	--	0.025846	0.0256124	**0.02643**	0.025995

Notes:

[a] US EPA Region 6 recommends that a hazard index benchmark of 0.25 be utilized to account for COPCs in areas with industrial activity. Although significant industrial activities do not exist near BGCAPP, this very conservative benchmark was used for comparison to emissions to ensure risks were not underestimated.

[b] The acute risk assessment scenario evaluates short-term 1-hour maximum air concentrations based on hourly emission rates. Inhalation is the route of exposure.

2.0 REVISED FACILITY DESCRIPTION

The Blue Grass Army Depot (BGAD) is described in the MPHHRA and that information is unchanged. No changes related to the overall site are presented in this addendum.

2.1 EDT Alternatives

Four EDTs are considered for this MPHHRA:

1. Dynasafe's Static Detonation Chamber (SDC),
2. CH2M Hill's Transportable Detonation Chamber (TDC),
3. Kobe Steel's Detonation of Ammunition in a Vacuum Integrated Chamber (DAVINCH), and
4. US Army's Explosive Destruction System (EDS).

Only changes to the location and configuration of the EDS alternative are described in this addendum. The EDS uses explosive charges to access chemical munitions, eliminating their explosive capacity before the chemical agent is neutralized. The system's main component, a sealed, stainless steel vessel, contains all the blast, vapor, and fragments from the process. Agent treatment is confirmed by sampling residual liquid and air from the vessel prior to reopening the EDS.

2.2 EDT OPERATIONS

2.2.1 Feed Material Assumptions

Table 2-1 presents the quantity of feed materials and anticipated processing schedule by the EDT alternatives.

2.2.2 Duration of EDS Operations

The EDS specification provides for operation 24 hours per day, 7 days per week during a period of operation. Based on this schedule, seven EDS units are required.

2.3 EDS Location

The revised EDS location is north of the SPB Tank Farm at the BGCAPP facility. The EDS site location within the BGAD facility is described more fully in Section 3.2 of this report.

Table 2-1
BGCAPP EDT Processing Rates

EDT Technology	Leakers				
	Demand Rate (munitions/hr)	Availability Factor	Effective Processing Rate		
			munitions/hr	munitions/day	munitions/week
SDC2000	[redacted]	[redacted]	0.29	7.0	49.1
TDC60	[redacted]	[redacted]	0.55	13.1	92.0
DV60	[redacted]	[redacted]	0.73	17.5	122.6
EDS	[redacted]	[redacted]	0.085	1.70	10.2

EDT Technology	Rejects				
	Demand Rate (munitions/hr)	Availability Factor	Effective Processing Rate		
			munitions/hr	munitions/day	munitions/week
SDC2000	[redacted]	[redacted]	3.80	91.1	637.7
TDC60	[redacted]	[redacted]	1.24	29.8	208.5
DV60	[redacted]	[redacted]	1.46	35.0	245.3
EDS	[redacted]	[redacted]	0.51	10.2	61.2

EDT Technology	Quantity of Leakers in the campaign	Quantity of Rejects in the campaign	Effective Weekly Processing Rate Per Unit		Weeks Required to Process with One Unit	Weeks Available	Number of Units Required	Weeks Required to Process with Multiple Units	Uncommitted Machine Weeks Available
			Leakers	Rejects					
SDC2000	[redacted]	[redacted]	[redacted]	[redacted]	[redacted]	[redacted]	[redacted]	[redacted]	[redacted]
TDC60	[redacted]	[redacted]	[redacted]	[redacted]	[redacted]	[redacted]	[redacted]	[redacted]	[redacted]
DV60	[redacted]	[redacted]	[redacted]	[redacted]	[redacted]	[redacted]	[redacted]	[redacted]	[redacted]
EDS	[redacted]	[redacted]	[redacted]	[redacted]	[redacted]	[redacted]	[redacted]	[redacted]	[redacted]

2.4 EDT Emission Sources

The four EDT Alternatives each result in emissions of different COPCs with different emission rates, which were identified and discussed in the MPHHRA. The characteristics of the emissions sources, including the revised values for the EDS alternative are summarized in Table 2-2.

A list of possible COPCs was developed by ERM Consulting & Engineering based on vendor information regarding potential EDT emissions and evaluation of munitions intended for destruction.

The COPCs were evaluated separately for each technology and are shown by technology in the MPHHRA. No changes to the values presented in the MPHHRA are needed based on the revisions to the plan for the EDS alternative.

2.5 Estimated Emission Rates

Estimated emission rates were also developed by ERM Consulting & Engineering based on vendor information regarding potential EDT emissions and evaluation of munitions intended for destruction of HAPs. No changes to the emission rates have been made related to the revised plan for the EDS alternative.

Table 2-2
Source Characteristics Required for Air Modeling

Source Characteristics		SDC 1 Process Stack	SDC 2 Enclosure Stack	TDC Stack 2 Units	DAVINCH Stack 2 Units	EDS Stack 7 Units
[redacted]	[redacted]	[redacted]	[redacted]	[redacted]	[redacted]	[redacted]
Base Elevation	[redacted]	[redacted]	[redacted]	[redacted]	[redacted]	[redacted]
Height	m	15.24	4.9	15.24	15.24	15.24
	ft	50	16	50	50	50
Diameter	m	0.3	0.91	0.85	0.76	1.62
	ft	1.0	3.0	2.8	2.5	5.30
Temperature+	K	324	amb*	amb.+5.5*	amb*	300
	°F	124	amb*	amb.+10*	amb*	81
Velocity+	m/s	5.08	11.5	18.2	32.8	9.7
	ft/s	16.7	37.7	59.7	108	31.7
Emission Rate	g/s	1	1	1	1	1
	lb/hr	7.92	7.92	7.92	7.92	7.92
Mean Particle Size+	Microns	0.3	0.3	0.3	0.3	0.3
Mass Fraction#	(dimensionless)	1	1	1	1	1
Particle Density	g/cm^3	1	1	1	1	1

+ Source characteristics provided by MPHRA Report from Pueblo Army Depot.
** AERMOD feature that allows seasonal variation in temperature utilized for modeling.*
 # Mass Fraction of particles in the fine mode = 100%.

3.0 AIR DISPERSION AND DEPOSITION MODELING

Methodologies and models utilized for this project are as described in detail in the MPHHRA and are in accordance with common practice and regulatory guidance. Although air dispersion modeling was performed to recharacterize risk and hazard estimates for the revised EDS, no changes were made to the methodologies used.

3.1 Model Description

The AMS/EPA Regulatory Model, AERMOD (version 12060), is used for this analysis since it is the preferred model listed in EPA's "Guideline on Air Quality Models". This air model replaced the previous US EPA preferred model, ISCST3.

3.2 Emission Source Characterization

The construction site for the proposed Blue Grass Chemical Agent-Destruction Pilot Plant (BGCAPP) is located within the Blue Grass Army Depot in Richmond, Kentucky and is shown on Figure 3-1. Figure 3-2 presents the general arrangement of the BGCAPP building and equipment in the vicinity of the proposed EDT site. Since the location of the EDS facility was revised, no buildings are located at a distance that impacts downwash from the stack.

3.2.1 Stack Coordinates and Base Elevation

Reference points for emission sources from the facility plot plan were determined using USGS 7.5 minute quadrant maps. The Kentucky State Plane – South Zone grid utilized for facility mapping was converted to Universal Transverse Mercator (UTM), North American Datum 1927 (NAD27) using the program Google Earth – Earth Point Program. Table 2-2 in the previous section presents the coordinates for all evaluated emission sources and other emissions source characteristics used as inputs to AERMOD.

3.2.2 Stack Height and Building Wake Effects

The EDS alternative technology emissions are modeled as if all flow is emitted from a single source.

The EDS stack has an assumed stack height of 50 ft, per Bechtel Parsons specifications and is unchanged from previous MPHHRA modeling. Since no buildings are located in the vicinity of the EDS stack, building wake effects are not anticipated to influence the dispersion of stack gas.

3.2.3 Stack Gas Temperature, Flowrate and Velocity

The stack gas temperature and velocities are design parameters obtained from the 2012 PCAPP MPHRA Report. Stack diameter for the EDS unit was calculated using the assumed stack height and vendor supplied stack velocity. Since the number of stacks was modified from 14 to 7, some stack characteristics for the single EDS stack changed accordingly and are shown in Table 2-2.

3.2.4 Modeled Emission Rate and Particle-Size Distribution

AERMOD air modeling was performed based on a unit emission rate of 1.0 g/s, instead of compound-specific emission rates in an identical manner to that which was reported for the MPHHRA. The particle density of 1 g/cm^3 that was assumed for the sources and recommended in HHRAP was also used in this addendum.

3.3 Urban/Rural

As in the MPHHRA report, dispersion coefficients are set to rural.

3.4 Deposition Parameters

Deposition parameters for this addendum are unchanged from the MPHHRA.

3.5 Meteorological Data

No changes related to meteorological data were made from the MPHHRA for this addendum.

3.6 Receptor Grid and Terrain

The receptor grid for this project was designed according to HHRAP guidance. The grid includes 100-meter spacing out to three kilometers from the facility centroid and 500-meter spacing out to 10 kilometers. Figure 3-4 indicates the entire grid developed, including the 100-meter dense receptor spacing and the 500-meter receptor spacing that extends to 10 kilometers from the centroid of the designated sources, excluding most on-site receptors. On-site receptors are shown at 100-meter spaces over the surface of Lake Vega, which was modeled for water-based exposure scenarios.

Terrain elevations were included in the modeling analysis for completeness. AERMAP (version 11103) is used to calculate the receptor elevations from 7.5-minute DEM data files. AERMAP also calculates the critical hill height for each receptor location.

3.7 Chemical-Specific Parameters

No changes related to chemical-specific parameters were made from the MPHHRA for this addendum.

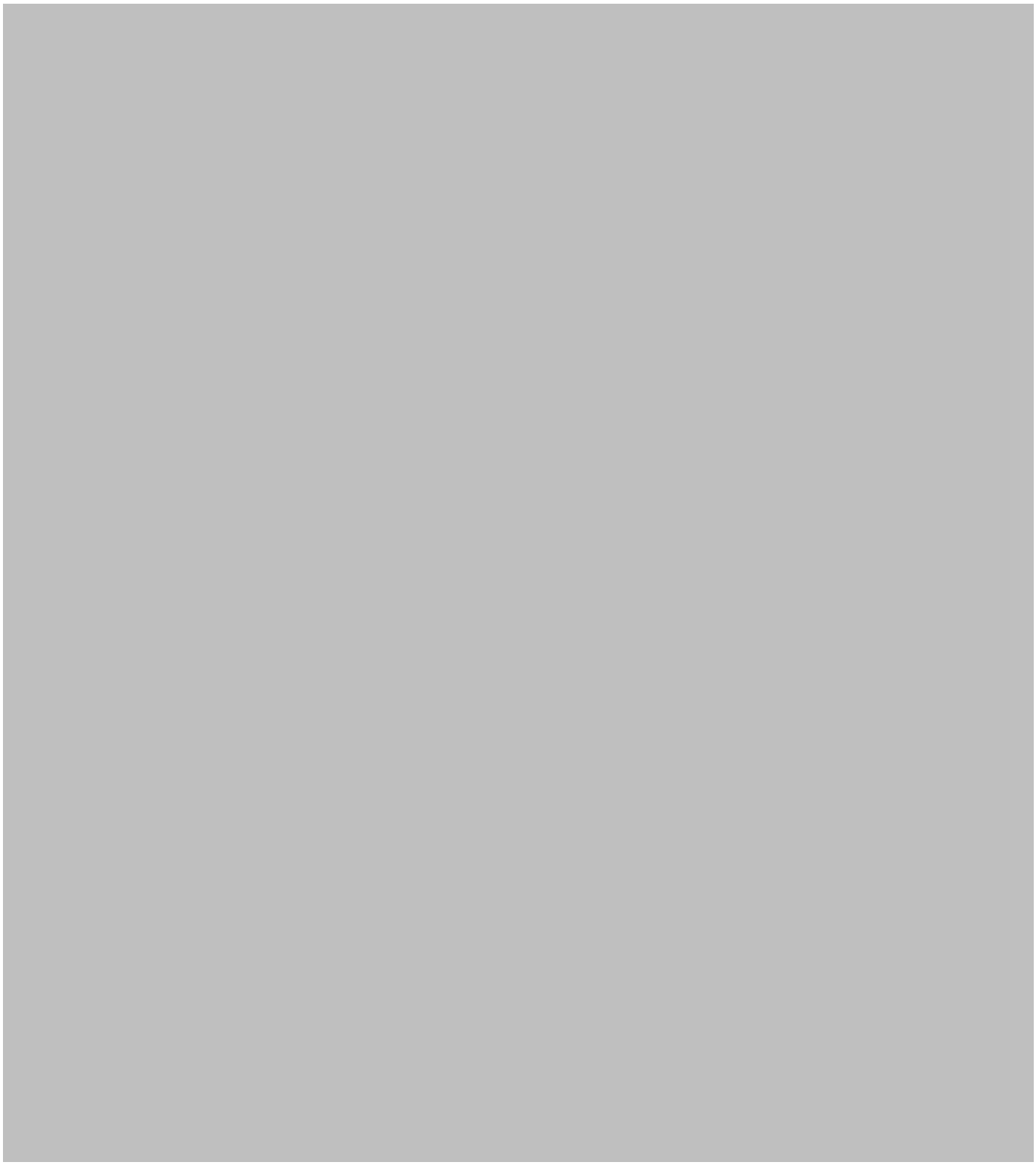

3.8 Modeling Results

The unitized modeling results presented in this section include concentration, dry deposition, wet deposition and total deposition for short-term (1-hour) and long-term (annual) exposures. There are a total of 87 model runs. Most modeled maximums occurred north of the facility, except for the SDC2 stack, which had most modeled maximums occurring at the Lake Vega water receptors on-site. The modeling run types and counts are summarized in Table 3-1.

Results of dispersion modeling runs for particle and particle bound phase modeling are summarized in Table 3-2. Tables 3-6 through 3-9 provide summary results for modeling runs for vapor phase modeling. Results provided include concentration maxima, as well as total, dry and wet deposition maxima.

Table 3-1
Modeling Run Types and Counts

Source	Phase Type	Model Run Count
EDS	Vapor	10
	Particle/Particle-Bound	1

Table 3-2
Particle/Particle-Bound Phase Modeling Maxima Summary

	Units	EDS
Particle Phase Annual Concentration (Cyp)	μg-s/g-m^3	1.78E-01
Particle Phase Annual Total Deposition (Dytp)	s/m^2-yr	1.35E-03
Particle Phase Annual Dry Deposition (Dydp)	s/m^2-yr	1.34E-03
Particle Phase Annual Wet Deposition (Dywp)	s/m^2-yr	1.00E-05
Particle Phase Hourly Concentration (Chp)	μg-s/g-m^3	1.56E+02

Table 3-3
Vapor Phase Modeling Maxima Summary – Concentration

COPC	CAS	Chemical Grouping	AERMOD	Unitized Modeled Maximum Concentration ($\mu g/m^3/g/s$)	
			MODEL ID	EDS	
				1-hour	Annual
acetone	67-64-1	Organic	ACETONE	158.76	0.18
bis(2-ethylhexyl)-phthalate	117-81-7	Organic	BIS2EPTH	153.84	0.18
carbon disulfide	75-15-0	Organic	CRBDSULF	157.24	0.18
ethanol	64-17-5	Organic	ETHANOL	157.35	0.18
H	505-60-2	Organic	H	158.61	0.18
methane	74-82-8	Organic	METHANE	158.95	0.18
methylene chloride	75-09-2	Organic	METHCHLO	159.02	0.18
toluene	108-88-3	Organic	TOLUENE	158.94	0.18
vinyl chloride	75-01-4	Organic	VINLCHLR	158.81	0.18
mercuric chloride	7487-94-7	Inorganic	MERCCHLR	153.28	0.17
elemental mercury	7439-97-6	Inorganic	MERCURY	159.04	0.18

Table 3-4
Vapor Phase Modeling Maxima Summary - Total Deposition

COPC	CAS	Chemical Grouping	AERMOD MODEL ID	Unitized Modeled Maximum Total Deposition (s/m^2-yr)	
				EDS	
				1-hour	Annual
acetone	67-64-1	Organic	ACETONE	1.00E-05	1.00E-04
bis(2-ethylhexyl)-phthalate	117-81-7	Organic	BIS2EPTH	2.00E-04	3.89E-03
carbon disulfide	75-15-0	Organic	CRBDSULF	4.00E-05	3.70E-04
ethanol	64-17-5	Organic	ETHANOL	4.00E-05	4.20E-04
H	505-60-2	Organic	H	1.00E-05	1.00E-04
methane	74-82-8	Organic	METHANE	0	2.00E-05
methylene chloride	75-09-2	Organic	METHCHLO	0	4.00E-05
toluene	108-88-3	Organic	TOLUENE	0	3.00E-05
vinyl chloride	75-01-4	Organic	VINLCHLR	0	5.00E-05
mercuric chloride	7487-94-7	Inorganic	MERCCHLR	5.00E-04	3.88E-02
elemental mercury	7439-97-6	Inorganic	MERCURY	0	1.00E-05

Table 3-5
Vapor Phase Modeling Maxima Summary - Dry Deposition

COPC	CAS	Chemical Grouping	AERMOD MODEL ID	Unitized Modeled Maximum Dry Deposition (s/m^2-yr) EDS	
				1-hour	Annual
acetone	67-64-1	Organic	ACETONE	1.00E-05	7.00E-05
bis(2-ethylhexyl)-phthalate	117-81-7	Organic	BIS2EPTH	2.00E-04	2.69E-03
carbon disulfide	75-15-0	Organic	CRBDSULF	4.00E-05	3.70E-04
ethanol	64-17-5	Organic	ETHANOL	4.00E-05	3.00E-04
H	505-60-2	Organic	H	1.00E-05	7.00E-05
methane	74-82-8	Organic	METHANE	0	2.00E-05
methylene chloride	75-09-2	Organic	METHCHLO	0	4.00E-05
toluene	108-88-3	Organic	TOLUENE	0	3.00E-05
vinyl chloride	75-01-4	Organic	VINLCHLR	0	5.00E-05
mercuric chloride	7487-94-7	Inorganic	MERCCHLR	5.00E-04	3.71E-02
elemental mercury	7439-97-6	Inorganic	MERCURY	0	1.00E-05

Table 3-6
Vapor Phase Modeling Maxima Summary - Wet Deposition

COPC	CAS	Chemical Grouping	AERMOD	Unitized Modeled Maximum Wet Deposition (s/m^2-yr)	
			MODEL ID	EDS	
				1-hour	Annual
acetone	67-64-1	Organic	ACETONE	1.00E-05	3.00E-05
bis(2-ethylhexyl)-phthalate	117-81-7	Organic	BIS2EPTH	1.40E-04	1.22E-03
carbon disulfide	75-15-0	Organic	CRBDSULF	0	0
ethanol	64-17-5	Organic	ETHANOL	4.00E-05	2.20E-04
H	505-60-2	Organic	H	1.00E-05	4.00E-05
methane	74-82-8	Organic	METHANE	0	0
methylene chloride	75-09-2	Organic	METHCHLO	0	0
toluene	108-88-3	Organic	TOLUENE	0	0
vinyl chloride	75-01-4	Organic	VINLCHLR	0	0
mercuric chloride	7487-94-7	Inorganic	MERCCHLR	1.70E-04	1.71E-03
elemental mercury	7439-97-6	Inorganic	MERCURY	0	0

4.0 EXPOSURE SCENARIO IDENTIFICATION

Individual human receptors evaluated in the risk assessment have different potential direct and indirect exposure to COPCs emitted from the EDT facility, depending on age, activities, and location. This section identifies these receptors and defines the pathways by which the receptors are exposed to the COPCs. The selected pathways and exposure scenarios described are the same as previously used for the MPHHRA.

4.1 Use of HHRAP Recommended Default Model Parameters

The risk modeling used for this addendum is identical to that used in the MPHHRA in the application of site specific data and HHRAP defaults. These parameters are not discussed in this addendum since they are characterized in the MPHHRA.

4.2 Special On-site and Off-site Water Body Considerations

Water bodies identified as relevant are identical that that used in the MPHHRA and include Lake Vega Reservoir and the . The modeled pollutant concentration at the receptor grid point on the lower Kentucky River that was nearest to the source was utilized as the concentration for the entire water body. The location of this receptor grid point is slightly different in this addendum due to the changes to the receptor map used. Receptors were placed at 100 meter increments on the surface of Lake Vega and the results from air dispersion modeling for all receptors were averaged to yield the concentration utilized in the risk model for Lake Vega impacts. Although the locations of these receptor grid points were slightly changed due to the shift of the receptor map, the methodology is unchanged.

4.3 Exposure Period Considerations

Based on guidance recommendations, the assumed duration of exposure to the modeled concentrations of COPCs vary based on age and the exposure pathway. No changes were made in the addendum to exposure periods.

5.0 TOXICITY DATA

Chemical toxicity data utilized for this MPHHRA was largely based on information in the Battelle Memorial Institute's March 2012 MPHRA Report for Explosive Destruction Technology Alternatives at the Pueblo Chemical Depot. Additional toxicity data not included in the PCAPP MPHRA database were compiled based on EPA's preferred hierarchy for these types of applications. No changes were made to the toxicity data from that presented in the MPHHRA.

6.0 RISK RESULTS

The risk characterization for the EDS alternative was performed in accordance with USEPA risk assessment guidelines and in a manner identical to the MPHHRA. This section presents the results of the EDS alternative, based on the changes described in Section 1.0 of this addendum. Summary results of the EDT MPHHRA are presented in Section 6.4 below. Detailed EDS alternative model output also is provided in Appendix 1 – Addendum. Health effects results are presented in the following order: carcinogenic risk, non-carcinogenic hazard, and acute hazard. A summary of the top five COPCs contributing the majority of the risk and hazard follows these health effects results.

Quantitative estimates of carcinogenic risks and non-carcinogenic hazards were calculated for direct inhalation exposures and indirect exposures to EDS emissions. Estimated total carcinogenic risk was compared to an acceptable level of 1 case in one hundred thousand (1×10^{-5}).

The typical benchmark for evaluation of the estimated long-term, non-carcinogenic hazard from airborne unit emissions is 1.0. US EPA Region 6 recommended that a hazard index benchmark of 0.25 be utilized to take background concentrations of COPCs into consideration in areas where significant industrial activity takes place. Although the BGAD location does not represent an area of significant industrial activity, hazard indices based on emissions from the EDS facility were compared against this very conservative benchmark [i.e., total non-carcinogenic hazard was compared to an acceptable hazard index (HI) of 0.25 (or total cumulative dose is less than 25 percent of the RfD)]. In addition, an acute hazard analysis was performed and the results were compared to an acceptable HI of 1.0.

Cumulative BGCAPP impacts (i.e., risks of EDS and BGCAPP main plant operating simultaneously) were also addressed by adding the results of the EDS MPHHRA to the results of the previous SLHHRA results and compared to the stated acceptable levels. These cumulative results are tabulated and presented below in Section 6.6.

6.1 Characterization of Carcinogenic Health Effects

Carcinogenic risk is estimated as the probability of an individual developing cancer over a lifetime as a result of exposure to specified emissions. For this risk assessment, carcinogenic risk is estimated as an incremental probability of fatal cancer from exposure to emissions from the EDS alternative for specific potential carcinogens (i.e., excess individual lifetime cancer risk). Carcinogenic risk is estimated from both direct and indirect exposures as described in

Section 4.0 of this report. The toxicity factors used to develop the risk estimate and presented in Table 5-1 are identical to those used in the MPHHRA.

6.2 Characterization of Non-Carcinogenic Health Effects

For COPCs with non-carcinogenic effects, the potential for non-carcinogenic toxic effects in an individual is evaluated by comparing the estimated exposure level over a specified time period with the appropriate non-cancer reference dose, also presented in Table 5-1 as RfD and identical to those factors used in the MPHHRA. The non-carcinogenic hazard quotient (HQ) is a unitless value that considers a threshold exposure limit that below which health effects are not expected to occur. Sensitive populations are considered in this benchmark. HQs represent a non-carcinogenic hazard associated with an individual COPC and a specific exposure pathway.

Both direct and indirect exposures are considered in the estimation of non-cancer health effects. HQs for direct exposures to COPCs are calculated by dividing the inhalation intake of a COPC by the inhalation reference dose (RfD) for that COPC. HQs for indirect exposures to COPCs are calculated similarly, and incorporate the averaging time for non-carcinogenic health effects.

A Hazard Index (HI) is generated by summing HQ's for all selected COPCs for a given receptor.

6.3 Characterization of Acute Health Effects

Potential acute hazards associated with short-term emission release events were evaluated for each COPC in a manner identical to the MPHHRA. The acute HQ (HQA) represents the hazard associated with short-term direct exposure to each COPC in air during a short-term emission release event. HQAs for each COPC were summed to calculate the overall acute HI (HIA).

6.4 Results for EDS Technology

Overall risk and hazard results are provided with all pertinent assumptions, input constants, and conditions in Appendix 1 - Addendum. The tables included in the following sections provide summary information and clarification of results.

Table 6-1 presents the total carcinogenic and non-carcinogenic risks estimated for each human receptor by pathway, including acute exposure. Table 6-2 identifies the COPC responsible for the maximum impact for each pathway for each exposure scenario.

6.5 Summary and Cumulative EDS and BGCAPP Risk and Hazard Results

Table 6-3 provides a summary of the carcinogenic risks, non-carcinogenic hazards, and acute hazards, for all of the EDTs. This table includes the results of three rounds of risk and hazard modeling:

1. Baseline results previously obtained when conducting the BGCAPP SLHHRA
2. Results previously obtained when conducting the MPHHRA for the entire EDT facility, which included results from the SDC alternative, TDC alternative and DAVINCH alternative; and
3. Results derived during the development of this addendum that focuses on the EDS technology.

Table 6-3 compares the total impacts from all three phases of modeling to acceptable levels. None of the EDT technologies is expected to result in impacts, individually or in addition to 2010 estimated BGCAPP impacts that exceed acceptable limits. In fact, the results of cumulative risk from both sources are well below threshold values.

The results for both cumulative non-carcinogenic and cumulative carcinogenic risk calculations are approximately one-tenth or less of the established, generally accepted and recommended (i.e., for areas of industrial activity) bench marks. The air modeling and risk calculations clearly indicate that unacceptable non-carcinogenic or carcinogenic health effects are not expected. This conclusion (i.e., adverse health effects are not expected due to BGCAPP and EDT emissions) is further strengthened by the use of very conservative assumptions which over-estimated the chronic and acute health hazards while also overestimating the cancer risks posed by BGCAPP and EDT air emissions.

Table 6-1
Total Carcinogenic Risk and Non-carcinogenic Hazard – EDS Technology

Exposure Scenario	**Scenario Location**	**Cancer Risk (Benchmark = 1E-05)**			**Total Hazard Index (Benchmark = 0.25)**		
		Oral	Inhalation	Total	Oral	Inhalation	Total
Adult Resident	Rmax	3.19E-12	4.97E-10	5.00E-10	1.37E-07	1.38E-05	1.39E-05
Child Resident	Rmax	1.43E-12	9.95E-11	1.01E-10	3.07E-07	1.38E-05	1.41E-05
Fisher	Rmax	3.43E-12	4.97E-10	5.01E-10	1.48E-07	1.38E-05	1.39E-05
Fisher Child	Rmax	1.46E-12	9.95E-11	1.01E-10	3.14E-07	1.38E-05	1.41E-05
Farmer	Fmax	4.45E-12	6.63E-10	6.67E-10	1.44E-07	1.38E-05	1.39E-05
Farmer Child	Fmax	1.47E-12	9.95E-11	1.01E-10	3.16E-07	1.38E-05	1.41E-05
Acute Exposure	Amax	--	--	--	--	1.24E-05	--

Table 6-2
Maximum Impact COPC Carcinogenic Risk and Non-carcinogenic Hazard – EDS Technology

Exposure Scenario	Exposure Pathway	Carcinogenic Risk		Non Carcinogenic Hazard	
		Max Cancer Risk	COPC	Max HQ	COPC
Adult Resident	inhalation	4.95E-10	H	1.38E-05	H
	oral	3.17E-12	H	1.37E-07	H
	soil	7.70E-19	H	3.33E-14	H
	produce	8.78E-16	H	3.80E-11	H
Child Resident	inhalation	9.90E-11	H	1.38E-05	H
	oral	1.42E-12	H	3.07E-07	H
	soil	1.44E-18	H	3.11E-13	H
	produce	4.28E-16	H	9.26E-11	H
Fisher	inhalation	4.95E-10	H	1.38E-05	H
	oral	3.41E-12	H	1.48E-07	H
	soil	7.70E-19	H	3.33E-14	H
	produce	8.78E-16	H	3.80E-11	H
	fish	2.42E-13	H	1.05E-08	H

Table 6-2
Maximum Impact COPC Carcinogenic Risk and Non-carcinogenic Hazard – EDS Technology (Continued)

Exposure Scenario	Exposure Pathway	Carcinogenic Risk		Non Carcinogenic Hazard	
		Max Cancer Risk	COPC	Max HQ	COPC
Fisher Child	inhalation	9.90E-11	H	1.38E-05	H
	oral	1.45E-12	H	3.14E-07	H
	soil	1.44E-18	H	3.11E-13	H
	produce	4.28E-16	H	9.26E-11	H
	fish	3.41E-14	H	7.37E-09	H
Farmer	inhalation	6.60E-10	H	1.38E-05	H
	oral	4.43E-12	H	1.44E-07	H
	soil	1.93E-20	H	3.33E-14	H
	produce	3.30E-15	H	1.47E-10	H
	beef	4.30E-14	H	1.40E-09	H
	milk	1.54E-13	H	5.01E-09	H
	pork	1.63E-15	H	5.37E-11	H
	egg	7.54E-21	H	1.31E-14	H
	chicken	1.16E-20	H	2.01E-14	H

Table 6-2
Maximum Impact COPC Carcinogenic Risk and Non-carcinogenic Hazard – EDS Technology (Continued)

Exposure Scenario	Exposure Pathway	Carcinogenic Risk		Non Carcinogenic Hazard	
		Max Cancer Risk	COPC	Max HQ	COPC
Farmer Child	inhalation	9.90E-11	H	1.38E-05	H
	oral	1.46E-12	H	3.16E-07	H
	soil	1.44E-18	H	3.11E-13	H
	produce	1.64E-15	H	3.55E-10	H
	beef	3.98E-15	H	8.61E-10	H
	milk	3.84E-14	H	8.30E-09	H
	pork	1.89E-16	H	4.10E-11	H
	egg	4.34E-20	H	9.40E-15	H
	chicken	6.34E-20	H	1.37E-14	H
Acute Exposure	inh	NA	NA	7.22E-06	Methane

Table 6-3
Summary of Incremental EDT Impacts and Cumulative BGCAPP Impacts

Hazard and Risk Characterization from EDT Facility Only									
Exposure Scenario	**Scenario Location**	**Total Cancer Risk (Benchmark = 1E-05)**				**Total Hazard Index (Benchmark = 0.25)**			
		Davinch	EDS	TDC	SDC	Davinch	EDS	TDC	SDC
Adult Resident	Rmax	2.01E-08	5.00E-10	2.42E-08	4.65E-10	0.000681	0.0000139	0.00120	0.000011
Child Resident	Rmax	4.16E-09	1.01E-10	4.89E-09	9.35E-11	0.000710	0.0000141	0.00121	0.000011
Fisher	Rmax	2.01E-08	5.01E-10	2.42E-08	4.65E-10	0.000681	0.0000139	0.00120	0.000011
Fisher Child	Rmax	4.16E-09	1.01E-10	4.89E-09	9.36E-11	0.000710	0.0000141	0.00121	0.000011
Farmer	Fmax	**3.26E-08**	**6.67E-10**	**4.03E-08**	**1.38E-09**	0.000868	0.0000139	0.00125	0.000016
Farmer Child	Fmax	5.43E-09	1.01E-10	6.60E-09	2.57E-10	**0.000985**	**0.0000141**	**0.00129**	**0.000018**
Acute Exposure	Amax	--	--	--	--	0.000246	0.0000124	**0.00083**	0.000395
Worst-Case Hazard and Risk Characterization from EDT Facility and BGCAPP Facility									
Farmer	Fmax	2.13E-07	1.80E-07	**2.20E-07**	1.81E-07				
Farmer Child	Fmax					0.013385	0.0124141	**0.01369**	0.012418
Acute Exposure	Amax	--	--	--	--	0.025846	0.0256124	**0.02643**	0.025995

Notes:

[a] US EPA Region 6 recommends that a hazard index benchmark of 0.25 be utilized to account for COPCs (compounds of potential concern) in areas with industrial activity. Although significant industrial activities do not exist near BGCAPP, this very conservative benchmark was used for comparison to emissions to ensure risks were not underestimated.

[b] The acute risk assessment scenario evaluates short-term 1-hour maximum air concentrations based on hourly emission rates. Inhalation is the route of exposure.

7.0 UNCERTAINTY IN HUMAN HEALTH RISK ASSESSMENT

When evaluating the results of a risk assessment, it is necessary to discuss the inherent uncertainty associated with risk assessment activities. Since the potential for the introduction of uncertainty is evident at every step of the risk assessment process, conservatism is utilized for many point values and assumptions, to ensure that the overall risk and hazard estimation overestimates the potential for health effects. Uncertainty with respect to this facility was discussed in detail in the MPHHRA and is unchanged with respect to the performance of activities associated with risk/hazard characterization for the EDS. Therefore, no further discussion of uncertainty is provided in this addendum.

8.0 CONCLUSION/RECOMMENDATION

No further refinement of the risks/hazards of the proposed EDS facility (e.g., refinement of the air dispersion modeling parameters, nor additional risk evaluation) is needed due to the overall favorable results of this risk assessment. Calculations of risk/hazard developed using estimated facility emissions and the conservative assumptions made in this risk assessment also do not indicate that additional sampling to refine the concentration of pollutants in air emissions is necessary.

This document contained Export Control/International Traffic in Arms Regulations Information.

Part E: Groundwater Monitoring [401 KAR 34:060 Section 1 & 40 CFR 264.90(b)(2)]

Groundwater monitoring requirements are not applicable. The EDT Facility is not a land-based disposal unit. The EDT Facility was designed to contain and control all releases, thereby preventing impacts to the groundwater. Although the EDT Facility does receive wastes that contain free liquids (i.e., projectiles containing chemical agent), the design and hazard prevention procedures of the facility provide protection for the environment and general public, eliminating the requirement for groundwater monitoring in the vicinity of the facility.

In addition, the EDT Facility does not contain any identified solid waste management units (SWMUs) that require groundwater monitoring.

This document contained Export Control/International Traffic in Arms Regulations Information.
(SENSITIVE INFORMATION REMOVED)

Part F: Procedures to Prevent Hazards

This Part contains information concerning procedures to prevent hazards in accordance with Federal and Commonwealth of Kentucky RCRA regulations These regulations require a description of the security procedures and equipment, inspection schedules, justification for a waiver of preparedness and prevention requirements, spill prevention containment and countermeasures plan, and prevention of accidental ignition or reaction of ignitable, reactive, or incompatible wastes. A request to waive security procedures and equipment requirements is not being made.

F-1: Security [401 KAR 34:020 Section 5 & 40 CFR 264.14]

F-1a: Waiver [401 KAR 34.020 Section 5 & 40 CFR 264.14(a)(1) & (2)]

Not applicable. Waiver not requested or sought. Paragraph F-1b describes the security measures to be used at the EDT Facility site to prevent hazards to intruders, livestock, workers, or the public. These security provisions prevent physical contact with waste, structures, or equipment within the active portion of the facility.

F-1a(1): Injury to Intruder

Due to the nature of the materials being stored and treated in the EDT Facility, the security measures (e.g., (SIR) authorization to use any necessary force) at the EDT Facility significantly exceed those found at other RCRA permitted treatment, storage and disposal facilities (TSDFs). As described in the following paragraphs, the fencing and barriers and other security measures control and prevent access of intruders and/or livestock to the EDT Facility and surrounding areas. These measures are more than adequate to prevent injury to unknowing or unauthorized persons or livestock.

F-1a(2): Violation of Chapter 34 Requirements Caused by Intruder

The same security measures to prevent access by unknowing or unauthorized personnel and livestock (i.e., mentioned in F-1a(1) and described in greater detail below) also serve to prevent disturbance of waste or equipment at the EDT Facility by an intruder.

F-1b: Security Procedures and Equipment [401 KAR 34:020 Section 5(2) & 40 CFR 264.14 (b)]

The EDT Facility has (SIR) security personnel and barriers/means to control entry to the facility. The RCRA regulations require these measures to prevent unauthorized entry of personnel and livestock. The paragraphs in this Part describe how the EDT Facility meets this requirement.

(SENSITIVE INFORMATION REMOVED)

This document contained Export Control/International Traffic in Arms Regulations Information.
(SENSITIVE INFORMATION REMOVED)

F-1b(1): 24-Hour Surveillance System [401 KAR 34:020 Section 5 & 40 CFR 264.14(b)(1)]

The general security and surveillance measures at the EDT Facility are more restrictive than those found at other hazardous waste treatment, storage, and disposal facilities (TSDFs).

(SIR)

The EDT Facility security and surveillance measures prevent entry of unknowing persons, intruders, and livestock onto the EDT Facility grounds, and buildings.

F-1b(2): Barrier and Means to Control Entry [401 KAR 34:020, Section 5 & 40 CFR 264.14(b)(2)]

The EDT Facility has both barriers and other means to control entry as part of its security and these are in addition to the 24-hour surveillance system as described above.

F-1b(2)(a): Barrier [401 KAR 34:020 Section 5 & 40 CFR 264.14(b)(2)(i)]

Barriers prevent entry of unauthorized personnel and livestock into the EDT Facility.

(SIR)

F-1b(2)(b): Means to Control Entry [401 KAR 34:020 Section 5 & 40 CFR 264.14(b)(2)(ii)]

and barriers control access to the site from outside of the BGAD.

(SENSITIVE INFORMATION REMOVED)

(SIR)

F-1c: Access Limited to Persons and Vehicles Displaying Appropriate IdentificaStion: Warning Signs [401 KAR 34:020 Section 5 & 40 CFR 264.14(c)]

Signs warning, in English, ~~D~~anger – Unauthorized Personnel Keep Out" are posted to identify the area as restricted and dangerous and that unauthorized entry is illegal, are posted along the outer perimeter fence surrounding the BGAD at intervals of 500 feet or less and near all access gates. These signs are easily visible at a distance of 25 feet. Large signs (i.e., approximately 4 feet by 6 feet in size) describing the ~~C~~onditions of Entry" are posted at each gate and warn of the possible consequences of unauthorized entry.

Warning signs at the EDT Facility chemical agent handling area are approximately 5 feet by 4 feet in size and posted at 50-foot intervals around the EDT Facility perimeter. The legends ~~W~~arning," ~~D~~anger," ~~R~~estricted Area," and ~~U~~se of Deadly Force Authorized to Prevent Unauthorized Entry" are clearly legible at distances of 25 feet or more.

Warning signs identifying the Fire Division, the Chemical Hazard, and the Explosive Hazard Class are at the EDT Facility entrance, on the Service Magazine, and on the EEB.

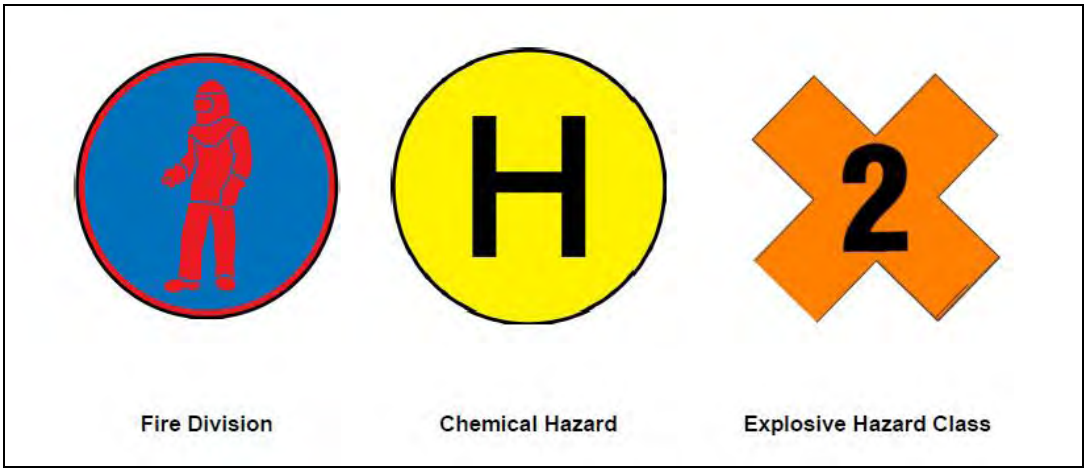

This document contained Export Control/International Traffic in Arms Regulations Information.

F-2: Inspection Schedule [401 KAR 34:020 Section 6 & 40 CFR 264.15]

F-2a: General Inspection Requirements [401 KAR 34:020 Section 6, and 38:090 Section 2 & 40 CFR 264.15(a)-(b), and 270.14(b)(5)]

The scheduled inspections of the EDT Facility and the container storage area (Service Magazine) include, but are not limited to, containers, Subpart X system, containment, safety, maintenance, emergency, and operating equipment needed to prevent, detect, or respond to environmental or human health hazards. The BGCAPP Main Plant Project Document Control Center (PDCC) maintains the completed inspections and other related documents such as the inspection log. Each inspection record includes:

(1) Date and time of inspection

(2) Name and signature of inspector

(3) Notation of any observations made

(4) Repairs made or remedial actions taken at the time of the inspection will be recorded with the observation

If repair or remedial action was to take place following the inspection, it will be tracked using the inspection log

F-2a(1): Types of Problems [401 KAR 34:020 Section 6 & 40 CFR 264.15(b)(3)]

Figure F-1 identifies the typical criteria and schedule used for Service Magazine (container storage) and Subpart X Unit (SDC) inspections.

F-2a(2): Frequency of Inspection [401 KAR 34:020 Section 6 & 40 CFR 264.15(b)(4)]

Figure F-1 summarizes the scheduled frequency of inspection for features, subsystems, and systems in the Service Magazine and the SDC (the Miscellaneous (Subpart X) Unit). Basis for selection of these frequencies was the rate of possible deterioration of equipment and the probability of an environmental or human health incident if the deterioration, malfunction, or operator error goes undetected between inspections.

F-2b: Specific Process Inspection Requirements [401 KAR 34:020, Section 6 & 40 CFR 264.15(b)(4)]

F-2b(1): Container Inspections [401 KAR 34:180 Section 5 & 40 CFR 264.174]

Figure F-1 shows an inspection criteria schedule for the inspections of the permitted areas within the EDT Facility. EDT Facility personnel conduct weekly inspections of munitions in the Service Magazine for deterioration, corrosion, spills, and evidence of leakage. These weekly inspections include a visual inspection for obstructions, inspection of the secondary containment for damage to coating, damage to concrete supporting the coating, and proper maintenance of aisle space between the rows of munitions in pallets/skids within the Service Magazine.

This document contained Export Control/International Traffic in Arms Regulations Information.

Figure F-2 shows an example inspection checklist for the weekly inspection activities for the Service Magazine.

F-2b(2): Tank System Inspection [401 KAR 34:190 Section 6 & 40 CFR 164.195]

Not applicable. The EDT Facility does not have tank systems for storage or treatment of hazardous waste.

F-2b(3): Waste Pile Inspections [401 KAR 34:210 Section 5 & 40 CFR 264.254]

Not applicable. The EDT Facility does not have any waste piles.

F-2b(4): Surface Impoundment Inspections [401 KAR 34:200 Section 5 & 40 CFR 264.226]

Not applicable. The EDT Facility does not have any surface impoundments.

F-2b(5): Incinerator Inspections [401 KAR 34:240 Section 7 & 40 CFR 264.347]

Not applicable. The EDT Facility does not include an incinerator.

F-2b(6): Landfill Inspections [401 KAR 34:230 Section 4 & 40 CFR 264.303]

Not applicable. The EDT Facility does not have any landfills.

F-2b(7): Land Treatment Inspections [401 KAR 34:220 Section 6 & 40 CFR 264.278]

Not applicable. The EDT Facility does not have any land treatment units.

F-2b(8): SDC (Subpart X) Inspections [401 KAR 34:190, Section 6 & 40 CFR 264.195]

The EDT Facility personnel conduct daily, weekly, monthly, quarterly and semi-annual inspections of the Subpart X system. Figure F-1 shows the typical inspection criteria and schedule for each of these inspections.

The example daily or weekly checklists used for the EDT Facility inspections (for the Service Magazine and SDC) are attached as Figure F-2 and Figure F-3. These inspection checklists include:

(a) Date and times of inspections

(b) Names and signatures of inspectors

(c) Observations made during inspection

F-2c: Remedial Action [401 KAR 34:020 Section 6 & 40 CFR 264.15(b)(5)(c)]

The operations personnel conducting the inspections of the specific areas or equipment inspect based on criteria identified on Figure F-3, Figure F-4, and Figure F-5 and record problems found on the inspection checklist. The problems found are then transferred to Figure F-6, which is a log that the EDT Facility personnel maintain, showing the remedial actions required for problems/issues identified during routine inspections.

F-2d: Inspection Log [401 KAR 34:020 Section 6(4) & 40 CFR 264.15(b)(5)(d)]

The inspection summary log tracks observations made during inspections and the remedial actions taken. This form includes the following:

(1) Dates and times of inspections
(2) Name(s) of inspector(s)
(3) Observations made
(4) Date and nature of repairs or remedial actions taken

Figure F-6 contains an example log.

F-3: Waiver of Preparedness & Prevention Requirements [401 KAR 38:090, Section 2(6) & 40 CFR 270.14 (b)(6)]

Not applicable. A waiver of preparedness and prevention requirements is not requested or sought.

F-3a: Equipment Requirements [401 KAR 34:030 Section 3 & 40 CFR 264.32]

EDT Facility will have the following equipment as required by 40 CFR 264.32.

F-3a(1): Internal Communications [401 KAR 34:030 Section 3 & 40 CFR 264.32(a)]

The EDT Facility maintains an internal communications system

(SIR)

F-3a(2): External Communications [401 KAR 34:030 Section 3 & 40 CFR 264.32(b)]

The EDT Facility maintains an external communications system consisting of hard-wired telephones, two-way hand-held radios, and cellular phones. This system provides redundant communication channels to the Operations Center (OC). Emergency response resources are coordinated through the OC as needed.

This document contained Export Control/International Traffic in Arms Regulations Information.

F-3a(3): Emergency Equipment [401 KAR 34:030 Section 3 & 40 CFR 264.32(c)]

The EDT Facility has portable fire extinguishers in all buildings [as required by the National Fire Protection Association (NFPA)], access control points, motorized MHE, Government vehicles, and the various storage areas. In or near chemical agent and chemical handling areas (i.e., EEB and Service Magazine), pre-positioned spill control and decontamination equipment for emergencies are provided and maintained. Showers units and eyewash stations are positioned to support decontamination in these areas.

A dedicated vehicle, equipped with emergency response equipment and supplies also is maintained within the EDT Facility.

F-3a(4): Water for Fire Control [401 KAR 34:030 Section 3 & 40 CFR 264.32(d)]

An aqueous sprinkler system for fire protection is provided in the EEB, and hydrants to provide water for fire control are located on the north and west sides of the building. The BGCAPP Main Plant also has a fire hydrant system with water supplied by the BGAD throughout the Main Plant. These hydrants are outside the EDT Facility but are accessible by responding BGAD Fire Department personnel if necessary.

F-3b: Aisle Space Requirements [401 KAR 34:030 Section 6 & 40 CFR 264.35]

Not applicable. No waiver of the adequate aisle space requirement is required or being requested.

F-4: Preventive Procedures, Structures, and Equipment [401 KAR 38:090 Section 2(8) & 40 CFR 270.14(b)(8)]

The following paragraphs provide information on the procedures, structures, and equipment used to prevent hazards in the EDT Facility.

F-4a: Loading and Unloading Operations [401 KAR 38:090 Section 2(8) & 40 CFR 270.14(b)(8)(i)]

Loading and unloading of munitions is discussed in Paragraph 2. Overview of Waste Transport, Waste Storage; Facility Design; and Destruction Process in Part D. The loading and unloading of other materials and wastes will take place in this same area using material handling equipment.

F-4b: Runoff Prevention [401 KAR 38:090 Section 2 & 40 CFR 270.14(b)(8)(ii)]

The following features and measures are used to control runoff from this facility:

The SDC and the EEB provide vapor containment during the treatment process.

The roof of the EEB diverts storm water away from the treatment unit and the hazardous wastes it treats.

This document contained Export Control/International Traffic in Arms Regulations Information.

Storage of the munitions is within a structure (Service Magazine) that complies with RCRA requirements, and is inspected at least weekly.

The Service Magazine incorporates a coating (i.e., tested and impermeable to mustard agent) that is supported by concrete. The liner/secondary containment provides sufficient volume to contain the spill of either the largest container or 10 percent of all the containers/munitions stored within the Service Magazine.

Storm water is prevented from flowing into the Service Magazine by the magazine roof, and by the design of the secondary containment and entry into the magazine (e.g., surrounding areas slope away from the magazine and the entry to the magazine is also raised to prevent the entry of storm water)

Runoff prevention utilized at the EDT Facility also includes a storm-water collection system that drains to the nearby BGCAPP Main Plant storm-water detention basin.

F-4c: Water Supplies [401 KAR 38:090 Section 2 & 40 CFR 270.14(b)(8)(iii)]

Public drinking water wells or reservoirs are not located within one mile of the EDT Facility boundary and the design features of the facility will prevent runoff from reaching surface water or drinking water supplies. The EDT Facility also has an emergency generator to provide power and allow safe shutdown of the treatment process should interruption of utility provided power occur. This power is also used to power the cascade ventilation system and prevent unplanned releases to the atmosphere that could contaminate any water supplies.

F-4d: Equipment and Power Failures [401 KAR 38:090 Section 2(8)(d) & 40 CFR 270.14(b)(8)(iv)]

Critical equipment within the EDT Facility is provided emergency power via emergency generator and battery backup if a power failure occurs during SDC operations. In addition, the SDC control system is designed to allow a safe and rapid transition of the SDC equipment to a standby mode and eventually a shutdown mode should the power interruption continue.

F-4e: Personnel Protection Equipment [401 KAR 38:090 Section 2(8)(e) & 40 CFR 270.14(b)(8)(v)]

The protection of EDT Facility personnel involves engineering controls through design of the SDC, administrative procedures, and personal protective equipment (PPE).

(1) Facility Design

The first level of protection includes the design of the EDT Facility to eliminate or reduce the hazard to the maximum extent possible. The combination of cascade ventilation, continuous air monitoring, and control room observation of processing and personnel provides a design with extensive built-in personnel protection features.

This document contained Export Control/International Traffic in Arms Regulations Information.

(2) Administrative Controls

EDT Facility personnel perform processing, maintenance, and other work activities in accordance with procedures. These procedures provide requirements that control how personnel perform specific work activities. For example, the BPBG Team provides personnel protection procedures for lockout/tag out, monitoring of chemical agent work areas, and emergency response to chemical spills.

(3) Use and Selection of PPE

Hazard identification; routes of exposure (inhalation, skin absorption, ingestion, or injection); and performance of the PPE material as a barrier to potential hazards determines the selection of PPE to be worn during agent and non-agent related activities. Other factors in the selection process include matching the PPE to work requirements and task-specific conditions, task duration, and potential for heat stress. Selecting the appropriate level of dress also includes the requirements provided in DA PAM 385-61 and those required for handling explosive munitions or components.

When responding to a chemical agent or industrial chemical release, the On Scene Commander (OSC), with assistance/approval of the Safety representative, selects the correct level of PPE for each emergency response activity and situation (Refer to Part G for additional information on the EDT Facility emergency response activities). The material safety data sheets (MSDSs) for the chemical involved, National Institute for Occupational Safety and Health (or ~~"N~~IOSH") guidance, the DOT Emergency Response Guidebook, and EDT Facility emergency response procedures are references used in making this selection. The PPE selection made by the OSC also considers the work requirements of the response action, to ensure the durability of the PPE is appropriate for that work.

(4) General Safety Criteria for Bulk Hazardous Chemicals

Emergency eyewash stations and showers are located near hazardous-liquid handling areas (e.g., near the OTS scrubbers) except for work areas in which only PPE are used.

F-4f: Atmosphere [401 KAR 38:090, Section 2(8)(f) & 40 CFR 270.14(b)(8)(vi)]

The atmospheric considerations in and around the facility begin with the air inside the EONCs and storage magazines, continue with the air inside the EDT facility building and conclude through the exhausts from both the off-gas treatment system and the HVAC system. Air monitoring for the EDT facility will be conducted to provide a safe environment for the workforce, indicate operating conditions of the facility, and ensure environmental compliance. Monitoring systems methodology, equipment and locations have been carefully chosen to effectively satisfy these requirements. These systems are designed to monitor for the chemical warfare agent "H" (Mustard) and will be operational and online at all times while storing, transporting and/or processing munitions at the facility. Airborne and related exposure limits have been established by the Department of the Army (DA) in conjunction with guidelines from the Centers for Disease Control and Prevention (CDC) and published in DA 385-61, as well as the Federal Register (Volume 69, No.85, May 3, 2004, page 24164) for implementation and use in agent monitoring. Table F-1 provides more details on these levels and concentrations.

This document contained Export Control/International Traffic in Arms Regulations Information.

Table F-1 – Airborne and Related Exposure Limits for Sulfur Mustard Agent (H/HD/HT)

Level	GPL	WPL	WPL	WPL	STEL[a]	VSL[b]	SEL[c]	IDLH[d]
Averaging Time	12 hrs.	12 hrs.	8 hrs.	4 hrs.	15 min	Variable	Variable	30 min
Limit (mg/m^3)	0.00002	0.00027	0.0004	0.0008	0.003	0.003	0.03	0.7
Monitoring Method[e][f]	Historic	Historic	Historic	Historic	Near real-time (NRT)	NRT	NRT	NRT

Notes:

(a) The STEL concentration is based on a 15-minute exposure for an unprotected worker, but is evaluated with an instrument using the shortest analytic cycle time practical to obtain accurate results. Since most NRT cycle times are less than 15min (typically 5-6min), confirmed readings, and durations are used to calculate whether the STEL has been reached or exceeded.

(b) The VSL is an agent vapor concentration-only value independent of time. As such, it may be used to define a level of cleanliness for items, wastes, engineering controls systems (e.g., filter beds and airlocks) and facilities under specific environmental conditions. VSL is the readout level of certain NRT monitors and the value is applied to process or operational monitoring as opposed to worker exposure.

(c) The source emission level (SEL) is also a vapor agent concentration only value that is independent of time. It is measured with NRT instruments. The measured value is used for modeling and to ensure the GPL is not exceeded at the installation boundary.

(d) Immediately dangerous to life or health (IDLH) monitoring with an NRT typically requires additional sample conditioning equipment to keep high levels of agent from saturating the detector.

(e) Historic monitoring is typically used where the sample analyzed represents an extended period of time and the results are not known until laboratory analysis is completed after the sampling event has been completed. As a result, AELs using historic monitoring are set at levels at which health effects are not expected to occur.

(f) Near real-time monitoring is conducted with instruments that have the capability to collect, analyze, and report or display results within 15 minutes. They also provide audible and remote alarms when levels are detected at, or above, a specific alarm set point.

All chemical agent air monitoring is accomplished using two types of systems – MINICAMS® and DAAMS. The MINICAMS® is an automated, NRT air monitoring system with local and remote audible and visible alarm capabilities. DAAMS collect samples via an adsorbent tube over a period of time and are brought back to the Laboratory. The DAAMS tubes are subsequently analyzed either for historical documentation or as a confirmation of a MINICAMS® reading. The MINCAMS® and DAAMS instruments are calibrated by injecting a known amount of chemical agent (liquid injection) into the sample inlet for each of the systems. The result is recorded as a calibration point that serves as a reference for all subsequent readings. DAAMS calibrations generally cover an analytical detection range, while MINICAMS® focus their calibration specifically at the monitoring level selected. MINCAMS® configurations are available to detect and quantify acceptable stack concentration (ASC), IDLH and VSL agent concentrations, while the DAAMS are used to collect samples for confirmation of MINICAMS® alarms and serve as primary monitoring in areas not monitored by MINICAMS®.

This document contained Export Control/International Traffic in Arms Regulations Information.

Chemical munitions will be transported to the EDT facility using EONCs. Prior to opening at the facility, the atmosphere inside each loaded EONC is monitored for the presence of agent vapors. This is done to ensure no leaking munitions are present inside the EONC. If agent is detected inside the EONC above permissible levels, it will be brought inside the facility for processing under engineering controls. Once under engineering controls, the EONC is opened and the leaking munition(s) can then be identified using a MINICAMS®, where it will be overpacked and safely processed. For routine EONCs that monitor below permissible levels, the munition(s) may be placed into the storage magazine or brought into the facility and placed in the loading area. The Service Magazine atmosphere will be monitored 24hrs/day, 7 days/week any time workers and/or chemical munitions are present inside the Service Magazine. This includes periods of time where munitions are being loaded into or removed from the Service Magazine. This monitoring will be conducted using MINICAMS® with co-located DAAMS for confirmation of alarms. Monitoring is not required if workers and/or chemical munitions are not present in the Service Magazine. However, under these circumstances, monitoring must be re-established prior to opening the Service Magazine and/or workers entering the Service Magazine.

The service magazine is configured to support portable powered filter systems. In the event of a confirmed NRT alarm, the filter system will be connected to the Service Magazine vent and monitoring will commence at the filter midbed for a minimum of two complete NRT cycles. If the measured agent level is below the VSL, monitoring shall be conducted at least daily, with a minimum of two complete NRT cycles for each monitoring event. If the measured agent level is equal to or greater than the VSL, filter exhaust monitoring at the VSL will be performed continuously until appropriate corrective actions have been performed to eliminate the agent source. When the agent source is contained or mitigated as documented by agent monitoring levels below the VSL, additional monitoring will be conducted to determine there is no agent present above the WPL. When this determination has been made, normal operations may continue.

The atmosphere within the EEB is vented through a closed HVAC system to a filter train before exiting to the environment through an exhaust fan and HVAC stack. This filter train consists of a pre-filter, a HEPA filter, a charcoal filter and a test section (referred to as the ‗midbed'). From this point, the filter train continues with a second charcoal filter followed by another HEPA filter. The exhaust filtration unit is connected to the EEB in such a fashion as to provide negative pressure within the facility with respect to the air outside the facility. Whenever the doors are closed and operations are being conducted, the atmosphere within the facility will be maintained under negative pressure to ensure any potential agent vapors present are captured by the carbon filtration system and not released to the environment. The filter midbeds will be continuously monitored for the presence of agent vapors using DAAMS and the filter stack will be monitored at the VSL using MINICAMS® with co-located DAAMS. DAAMS tubes will be analyzed only in the event of an alarm at the stack.

Another potential air source from within the EDT Facility to the atmosphere is the exhaust from the SDC. The SDC exhaust flows through an OTS described in section D-8a(1) (e) of this permit application. The off gas is released to a downstream carbon filter unit similar to the HVAC filter train described above before exiting to the environment through an exhaust fan and stack. The exhaust fans and stacks for the HVAC filter and OTS filter are completely separate. Additionally, the OTS exhaust stack will be monitored continuously during operations at the SEL using NRT monitors with co-located DAAMS tubes for confirmation. DAAMS tubes will be analyzed only in the event of an alarm at the stack.

This document contained Export Control/International Traffic in Arms Regulations Information.

Atmospheric NRT monitoring, along with confirmation and historical monitoring, also will occur at various other locations within the EEB. This monitoring will be done to ensure adequate worker protection and process controls are in place. The monitoring configurations within the EDT Facility will vary depending on the hazard category and monitoring level required. The number of monitoring stations, exact sample locations, and monitoring levels will be determined by the Safety and Health (S&H) Department in compliance with programmatic guidance.

The EEB also is equipped with an airlock to allow for processing of munitions, equipment, and personnel into the building and allow for controlled processing of scrap, waste, and personnel out of the building under engineering controls. The airlock is designed with adequate air exchanges so the air can be monitored for the presence of agent before allowing items to be released from inside the EEB. In the event any of the monitored locations within the EDT Facility exceed the alarm set points, this airlock room will be monitored with MINICAMS® for a minimum of two cycles before personnel or items that have been in the facility under contaminated conditions may exit. In the event agent readings are above the VSL, the items will remain under engineering controls. The items will be placed back into the EEB for further decontamination and then will be re-processed and monitored through the airlock.

Finally, the atmosphere for both the general public and environment surrounding the installation boundary must be protected at or below the GPL level. Mathematical modeling (e.g., risk assessment) will be used to establish whether there is reasonable potential to reach or exceed the GPL at the boundary. If there is no reasonable potential to exceed the GPL, then air monitoring at the facility perimeter will not be required. In the event this modeling cannot be performed, or the results of the modeling show that it would be possible to exceed the GPL at the boundary, then air monitoring at the facility perimeter will be performed. This monitoring, if required, will be historical monitoring using DAAMS tubes. In the highly unlikely event a chemical agent release of greater than 1STEL occurs outside engineering controls, this monitoring strategy will be used to determine if the GPL has been exceeded at the boundary.

This document contained Export Control/International Traffic in Arms Regulations Information.

F-5: Prevention of Reaction of Ignitable, Reactive, or Incompatible Wastes [401 KAR 38:090 Section 2(9) & 40 CFR 270.14(b)(9)]

F-5a: Precautions to Prevent Ignition or Reaction of Ignitable or Reactive Wastes [401 KAR 34:020 Section 8 & 40 CFR 264.17 and 264.17(c)]

(1) Open Flames, Smoking, Welding or Cutting, Heat/Hot Surfaces and Sparks

Because the EDT Facility manages the chemical agent Mustard and the reactive tetryl (explosive) in the projectile bursters, the BPBG Team prohibits smoking and open flames without a permit. A smoking area will exist at a specific location within the EDT Facility. Signs will be posted indicating smoking is authorized only in this designated area. No smoking, cutting, welding, or any other spark-producing operations occur without a permit in any hazardous waste storage area with the waste present. Any cutting or welding operations require a ~~"~~Hot Work Permit." Signs are posted to prohibit any hot work without a permit. Design of the SDC equipment prevents accidental ignition or reaction of chemical agent and explosives. The BPBG Team prohibits ~~"~~hot" cutting (e.g., with oxyacetylene torch) and welding within the process areas of the EDT Facility while wastes are present in those areas, unless alternative mitigation measures are applied (e.g., use of fire blankets or other barriers). EDT Facility equipment grounding prevents the transfer of electrostatic charges to the munitions.

(2) Response to Fires

The BPBG Team considers a fire in any part of the EDT Facility as a serious event requiring immediate attention and corrective action. Because any fire may expose energetics in the munitions to an ignition source and may result in rapid spreading of the fire, EDT Facility personnel do not make any distinction between size and type of fires. EDT Facility personnel immediately report all fires inside the facility, and initiate appropriate response.

F-5b: General Precautions for Handling Ignitable or Reactive Waste and Mixing of Incompatible Waste [40 CFR 264.17(a) and (b)]

General precautions for handling the ignitable wastes (small amount of explosive in the M110 155mm projectiles) include the following:

(1) The design and construction of the EDT Facility (i.e., DC and Service Magazine) include precautions for chemical agent-filled munitions storage, handling and processing areas (e.g., lightning protection, engineering controls) to meet U.S. Army safety standards.

(2) Dusts and vapors released from treatment in the SDC are controlled by the OTS. The DC provides containment for ignition during deflagration and detonation events.

(3) Within the scrap handling conveyor system, equipment also collects and removes dust.

This document contained Export Control/International Traffic in Arms Regulations Information.

(4)Structural integrity of the SDC chamber controls the blast impacts associated with the deflagration or detonation of these munitions. The design of this chamber has been tested and proven in Germany and Anniston, AL. The inner and outer chambers are also inspected as part of the inspection plan to ensure the DC continues to control the effects of munitions treatment.

These general precautions, design of the SDC, and procedures mitigate potential hazards. The emergency power supplies for the safe shutdown of the SDC provide additional protection of human health and the environment.

F-5c: Management of Ignitable or Reactive Wastes in Containers [401 KAR 34:180 Section 7 & 40 CFR 264.177]

Containers holding ignitable wastes are located more than 15 meters (50 feet) from the BGAD facility property line due to the distance of the EDT Facility from the BGAD boundaries. Storage of containers (i.e., projectiles, over-packed projectiles, and DOT bottles) prior to processing occurs in the Service Magazine. This magazine has design features for safe storage of these items (e.g., lightning protection and monitoring for potential agent vapor emissions).

The BPBG Team does not expect to generate reactive wastes for storage in containers (i.e., in <90-day storage). However, should this occur, the containers of reactive waste would be placed on a containment pallet separated from other wastes by a distance of at least 4 feet, and located more than 50 feet from the EDT Facility property line. Storage is within the boundaries set forth in 40 CFR 270.15(c) and 264.176 and details of the management of these wastes are provided in D-1 Containers. The containment pallets have a secondary containment capacity of at least 55 gallons. That is more than 10 percent of the maximum storage capacity of the containers on the containment pallet and equal to or greater than a single 55-gallon drum.

F-5d: Management of Incompatible Wastes in Containers [40 CFR 264.177(a) and (b), 264.17(b) and (c)]

The BPBG Team does not expect incompatible hazardous waste generation in facility processes. Incompatible wastes, if generated, are not stored together in the same container. Knowledgeable EDT Facility personnel wash empty containers before re-using for wastes. If questions arise about whether wastes are compatible, laboratory personnel conduct incompatibility determinations prior to storing containers near each other. Only the same waste stream is stored in a container. Incompatible wastes in separate containers are either stored in separate containments or stored (if liquid) on separate containment pallets.

F-5e: Management of Ignitable or Reactive Wastes in Tanks [401 KAR 34:190 Section 9 & 40 CFR 264.198]

Not applicable. Ignitable or reactive wastes will not be managed in EDT Facility tanks. The EDT Facility does not use tanks for management of wastes.

F-5f: Incompatible Wastes in Tanks [401 KAR 34:190, Section 10 & 40 CFR 264.199]

Not applicable. Incompatible wastes will not be managed in EDT Facility tanks. The EDT Facility does not use tanks for management of wastes.

This document contained Export Control/International Traffic in Arms Regulations Information.

F-5g: Ignitable/Reactive Wastes for Waste Piles [401 KAR 34:210 Section 6 & 40 CFR 264.256 and 264.17(b)]

Not applicable. The EDT Facility does not use waste piles.

F-5h: Incompatible Wastes in Waste Piles [401 KAR 34:210 Section 7 & 40 CFR 264.257 and 264.17(b)]

Not applicable. The EDT Facility does not use waste piles.

F-5i: Ignitable/Reactive Wastes in Surface Impoundments [401 KAR 34:200 Section 8 & 40 CFR 264.229 and 264.17(b)]

Not applicable. The EDT Facility does not use surface impoundments.

F-5j: Incompatible Wastes in Surface Impoundments [401 KAR 34:200 Section 9 & 40 CFR 264.230 and 264.17(b)]

Not applicable. The EDT Facility does not use surface impoundments.

F-5k: Ignitable/Reactive Wastes in Landfills [401 KAR 34:230 Section 7 & 40 CFR 264.304 and 264.17]

Not applicable. The EDT Facility does not use landfills.

F-5l: Incompatible Wastes in Landfills [401 KAR 34:230 Section 8 & 40 CFR 264.312]

Not applicable. The EDT Facility does not use landfills.

F-5m: Liquid Wastes in Landfills [401 KAR 34:230 Section 9 & 40 CFR 264.313(a-e)]

Not applicable. The EDT Facility does not use landfills.

F-5n: Special Requirements for Containers Disposed in Landfills [401 KAR 34:230 Sections 10 and 11 & 40 CFR 264.314 and 264.315]

The EDT Facility does not operate a landfill but, as a generator, plans to use approved commercial landfills for disposal, to include disposal of:

(1)Empty containers (i.e., crushed or volume reduced)

(2)A limited number of agent-derived wastes composed of solid wastes and having a headspace reading of <1 VSL

This document contained Export Control/International Traffic in Arms Regulations Information.

NOTE: Agent-derived wastes are screened using headspace monitoring prior to shipment offsite for disposal. Results of this monitoring must be <1 VSL before the waste can be sent to a landfill for disposal. Part C includes a description of the monitoring methods used.

(3)Wastes sent to a landfill for disposal possibly containing ~~f~~free liquids" must be packed with sorbents to eliminate the possibility of free liquids

(4)Closure debris and wastes

(5)The EDT Facility does not dispose of lab packs in landfills and uses alternative forms of treatment/disposal (e.g., incineration).

F-5o: Ignitable or Reactive Wastes in Land Treatment Units [401 KAR 34:220 Section 9 & 40 CFR 264.281 and 264.17(b)]

Not applicable. The EDT Facility does not operate land treatment units. All hazardous waste is shipped to an appropriately permitted, commercial TSDF for final disposal.

F-5p: Incompatible Wastes in Land Treatment Units [401 KAR 34:220 Section 10 & 40 CFR 264.282]

Not applicable. The EDT Facility does not operate land treatment units. All hazardous waste disposed offsite is shipped to an appropriately permitted, commercial TSDF for final disposal.

This document contained Export Control/International Traffic in Arms Regulations Information.

Figure F-1: Inspection Schedule for EDT Facility

ITEM	FREQUENCY[a]	CRITERIA
Service Magazine	D	Monitor For Apparent Leakage From The Munitions.
Service Magazine	W	Inspect The Floor For Areas That Indicate Excessive Wear Or Deterioration Of Protective Coating (Where Applicable).
EEB	M	Exits Are Clearly Identified And Marked.
SDC Equipment		
Munitions Lift	W	Observe Equipment In Operation To Determine Any Loss Of Performance. Inspect Lift Area For Apparent Leaks From Equipment.
Pushers	W	Observe Equipment In Operation To Determine Any Loss Of Performance. Inspect Area For Apparent Leaks From Equipment.
Loading Gates	W	Observe Equipment In Operation To Determine Any Loss Of Performance. Inspect Area For Apparent Leaks From Equipment.
Loading Chambers	W	Observe Equipment In Operation To Determine Any Loss Of Performance. Inspect Area For Apparent Leaks From Equipment.
Tilting Unit	W	Observe Equipment In Operation To Determine Any Loss Of Performance. Inspect Area For Apparent Leaks From Equipment.
Upper Chamber	W	Observe Equipment In Operation To Determine Any Loss Of Performance. Inspect Area For Apparent Leaks From Equipment.
Lower Chamber	W	Observe Equipment In Operation To Determine Any Loss Of Performance. Inspect Area For Apparent Leaks From Equipment.

This document contained Export Control/International Traffic in Arms Regulations Information.

ITEM	FREQUENCY[a]	CRITERIA
Elevating System	W	Observe Equipment In Operation To Determine Any Loss Of Performance. Inspect Area For Apparent Leaks From Equipment.
Turning System	W	Observe Equipment In Operation To Determine Any Loss Of Performance. Inspect Area For Apparent Leaks From Equipment.
Locking Ring	W	Observe Equipment In Operation To Determine Any Loss Of Performance. Inspect Area For Apparent Leaks From Equipment.
Conveyors	W	Observe Equipment In Operation To Determine Any Loss Of Performance. Inspect Areas For Apparent Drips, Spills, Or Leaks.
Feed Prohibited Interlocks (FPIs)	W	Test Control Circuits And Document FPIs.
SDC	A	Take Unit Offline. Perform A Detailed Inspection/Maintenance Operation.
Pollution Control Equipment		
Stack Monitors	D	Check Calibration.
Induced Draft (ID) Fans	D	Visually Inspect For Loss Of Lubrication, Check For Excessive Vibration, And Loss Of Performance By Use Of Operator Console Data For Operating Parameters
Bag House	W	Visually Inspect For Evidence Of Corrosion, Malfunctions, Leaks, Or Excessive Wear.
Buffer Tank	W	Visually Inspect For Evidence Of Corrosion, Malfunctions, Leaks, Or Excessive Wear.
Exhaust Filter	W	Visually Inspect For Evidence Of Corrosion, Malfunctions, Leaks, Or Excessive Wear.
Quench Unit	M	Visually Inspect Shell For Corrosion.
Scrubbers	M	Visually Inspect Shell For Corrosion.

This document contained Export Control/International Traffic in Arms Regulations Information.

ITEM	FREQUENCY[a]	CRITERIA
Spray Dryer	M	Visually Inspect Shell For Corrosion.
Scrap Handling System		
Dust Collection and Container	D	Visually Inspect For Leakage And Container Out Of Place
Scrap Funnel	W	Observe Equipment In Operation To Determine Any Loss Of Performance. Inspect Areas For Apparent Leakage.
Scrap Conveyors	W	Observe Equipment In Operation To Determine Any Loss Of Performance. Inspect Areas For Apparent Leakage.
Turning Devices	W	Observe Equipment In Operation To Determine Any Loss Of Performance. Inspect Areas For Apparent Leakage.
Fire Protection System		
Extinguishers (Manual)	M	Check For Condition And Gauge Pressure. Check Expiration Dates.
Communication with BGAD Fire Department	Q	Assure The System Functions And A Signal Is Received By BGAD Fire Department.
Sprinkler System	S	Inspect In Accordance With Fire Codes And Regulations.
Building Ventilation		
Pressure Gauges	D	Check That Gauge Is Reading In Appropriate Range.
General Ventilation System	M	Visually Inspect For Evidence Of Corrosion, Malfunctions, Leaks, Or Excessive Wear.
Internal Mechanical	When filters are changed	Visually Inspect For Evidence Of Corrosion, And Excessive Wear.
EEB		
General Housekeeping	M	Inspect For Proper Storage Of Materials, Good Housekeeping, And Condition Of Doors, Vents, And General Maintenance.
Lightning Protection	S	Visual Inspect The Condition Of Lightning Protection System

This document contained Export Control/International Traffic in Arms Regulations Information.

ITEM	FREQUENCY[a]	CRITERIA
Lightning Protection	S	Check Components Of The Lightning Protection System For Electrical Continuity.
Air Monitoring Instruments		
MINICAMS®	D	Visually Inspect Monitors For Physical Integrity
MINICAMS®	D	Check Diagnostic Indicators
MINICAMS®	D	Perform Agent Challenge Test And Calibration
Sample Line	D	Visually Inspect If Connected To Sample Port; Inspect If Heat Trace Is Functional.
Unused Sample Lines	D	Visually Inspect If Capped.
Sampling Pump Exhaust	D	Inspect For Proper Ventilation.
Chart Recorder	D	Inspect For Range Set At 10 Volts And In Record Mode.
Monitor Status	D	Verify MINICAMS® Not In Malfunction
Continuous Emission Monitoring (CEMS)	D	Verify Calibration
DAAMS (Perimeter Monitoring/Stack Monitoring):		
DAAMS Monitoring Station	D	Positioned Based On Laboratory Meteorological Data.
Tubes	D	Visually Inspect If Present.
Sample Line	D	Visually Check If Connected To Sampling Port; Inspect If Heat Trace Is Functional.
Unused Sample Lines	D	Visually Check If Lines Are Capped.
Sampling Pump Exhaust	D	Inspect For Proper Ventilation.
Power Supply	D	Inspect To Ensure Supply Meets Or Exceeds Monitoring Plan.
Laboratory Meteorological Station	D	Verify Proper Operation.
Uninterruptible Power Supply		
Invertor Input Voltage	M	Check Meter For Proper Voltage.

This document contained Export Control/International Traffic in Arms Regulations Information.

ITEM	FREQUENCY[a]	CRITERIA
Invertor Input Current	M	Check Meter For Proper Current.
Battery Current	M	Check Meter For Proper Reading.
Alternating Current Voltage	M	Check Meter For Proper Voltage.
Frequency	M	Check Meter For Proper Frequency.
Uninterruptable Power Supply Output Current	M	Check Meter For Proper Current.
Primary Input Voltage	M	Check Meter For Proper Voltage.
Emergency Generator		
Engine / Generator	S	Visually Inspect For Loose Drive Belts, Oil Leaks, Coolant Leaks, Lube Oil Level, and Mechanical Condition.
Permitted Storage Area		
Service Magazine	W	Visually Inspect For Proper Storage Of Materials, Proper Labeling, And Aisle Space. Visually Inspect Secondary Containment For Leaks And Deterioration Caused By Corrosion Or Other Factors.
Service Magazine	M	Inspect For Good Housekeeping, Condition Of Magazine Doors, Vents, And General Maintenance.
Service Magazine	Q	Function Testing Of The Intrusion Detection System (Ids) Sensors And Door Lighting.
Service Magazine	S	Visual Inspect The Condition Of Lightning Protection System.
Service Magazine	S	Check Components Of The Lightning Protection System For Electrical Continuity.

NOTES:

[a] D-Daily (once every calendar day)
W-Weekly (once every calendar week)
M-Monthly (once every calendar month)
Q-Quarterly (once every three (3) calendar months)
S-Semiannually (once every six (6) calendar months)
A-Annually (once every 12 months)

This document contained Export Control/International Traffic in Arms Regulations Information.

Figure F-2: EDT Facility – Permitted Storage Area Service Magazine

TYPICAL WEEKLY INSPECTION

This document is a RCRA document upon completion

Inspector(s) Name(s)_____ Date of Completion:_____

Inspector(s) Signature(s)_____ Time: From_____ to _____

WEEKLY INSPECTION- (EDT Facility Personnel)			Date and Nature of Repairs and/or Inspection			
Item No.	Inspection Item	Procedures	Status[a]		Observations	Remedial Action
Service Magazine			Place a √ in the appropriate box			
			A	U		
1	Permitted Storage Area					
	a - Spill Containment					
	b - Spill Control Material					
	c - Area Postings					
	d - Storage Area					
	e – Aisles					
	f – Containers					

EXAMPLE

WEEKLY INSPECTION- (EDT Facility Personnel)			Date and Nature of Repairs and/or Inspection			
Item No.	**Inspection Item**	**Procedures**	**Status[a]**		**Observations**	**Remedial Action**
	g - Storage Area: Spills or Leaks					
	h - Container: Lids					
	i - Container: Condition					
	j - Container: Labels – Application					
	k - Container: Labels – visibility					
	l - Container: Accumulation Date					
	m - Container: Capacity & Storage					
	n – Secondary Containment					
	o - Storage Area: Storm Water Run-on					
	p - Fire Extinguisher					
Comments:						

EXAMPLE

(a) A-acceptable; U-unacceptable; NA- Not Applicable; NIS-Not in service during inspection

NOTE: Contact Environmental Shift Representative **PRIOR TO** entering NIS for an inspection

This document contained Export Control/International Traffic in Arms Regulations Information.

Figure F-3: Typical Daily Inspection of SDC – Subpart X (Miscellaneous) System
EDT Facility – General Facility Inspection

TYPICAL DAILY INSPECTION

This document is a RCRA document upon completion

Inspector(s) Name(s) _____
Inspector(s) Signature(s) _____

DAILY OPERATIONS INSPECTION (EDT Facility Personnel)			Date and Nature of Repairs and/or Inspection			
Item No.	**Inspection Item**	**Procedures**	**Status[a]**	**Date/Time**	**Observations**	**Remedial Action**
1	General Area – EEB	Examine the floor for apparent leakage from the munitions in the loading area.				
2	Fences, Gates, and Locks	Evidence of gaps, holes, or damage to fence. Downed or damaged fence or gate posts. Erosion gaps and/or holes under the fence/gate. Vandalism, open or missing locks.				
3	Perimeter Warning Signs	Presence of warning signs on fences and gates. Visible and legible.				
4	Security of Process Areas	Doors locked to prevent unauthorized entry when buildings or processes are not in use.				

EXAMPLE

Comments:

A-acceptable; U-unacceptable; NA- Not Applicable; NIS-Not in service during inspection
NOTE: Contact Environmental Shift Representative **PRIOR TO** entering NIS for an inspection

This document contained Export Control/International Traffic in Arms Regulations Information.

Figure F-4: EDT Facility
Chemical Agent Monitors – MINICAMS®

TYPICAL DAILY INSPECTION

This document is a RCRA document upon completion

Inspector(s) Name(s) _____

Inspector(s) Signature(s) _____

RCRA Inspection Acceptable: _____ RCRA Inspection Unacceptable: _____

The following MINICAMS® inspection matrix can have a checkmark and comments at the end of this form; however, those comments do not necessarily make this inspection ~~U~~". Please state in the comments section of this form which MINICAMS® item(s) does not meet **RCRA Inspection criteria and is evaluated as "U".**

Item 1: Visually Inspect Monitors for Physical Integrity.

Item 2: Check Diagnostic Indicators on Monitor Housing for Proper Operation.

Item 3: Verify Agent Challenge Test and Calibration Have Been Performed.

Item 4: Sample Line: Visually Inspect if Connected to Sample Port; Inspect if Heat Trace is Functional.

Item 5: Unused Sample Lines: Visually Inspect if Capped.

Item 6: Sampling Pump Exhaust: Inspect for Proper Ventilation.

Item 7: Monitor Status: Verify MINICAMS® not in malfunction.

EXAMPLE

This document contained Export Control/International Traffic in Arms Regulations Information.

***No entry is required if there are no discrepancies identified during inspection**

MINICAMS® ID NUMBER	1	2	3	4	5	6	7	8	9
SDC No.									
SDC No.									
SDC No.									

COMMENTS/DISCREPANCIES

EXAMPLE

Verified By: _____ **Date:** _____

Discrepancies Noted: (Circle One) **YES** **NO**

This document contained Export Control/International Traffic in Arms Regulations Information.

Figure F-5: EDT Facility
Chemical Agent Monitors – DAAMS

TYPICAL DAILY INSPECTION

Inspector(s) Name(s) _____

This document is a RCRA document upon completion

Inspector(s) Signature(s) _____

RCRA Inspection Acceptable: _____ RCRA Inspection Unacceptable: _____

The following DAAMS inspection matrix can have a checkmark and comments at the end of this form; however, those comments do not necessarily make this inspection ~~U~~". Please state in the comments section if this form which DAAMS item(s) does not meet **RCRA Inspection criteria and is evaluated as "U'.**

EXAMPLE

Item 1: Visually Inspect Monitors for Physical Integrity.

Item 2: Tubes: Visually Inspect if Present.

Item 3: Sample Line: Visually Check if Connected to Sampling Port; Inspect if Heat Trace is Functional.

Item 4: Unused Sample Lines: Visually check if Lines are capped.

Item 5: Sampling Pump Exhaust: Inspect for Proper Ventilation.

Item 6: Power Supply: Inspect to Ensure Supply Meets or Exceeds Monitoring Plan.

***No entry is required if there are no discrepancies identified during inspection or the station is designated**

This document contained Export Control/International Traffic in Arms Regulations Information.

On Request and has not been requested on this day

DAAMS ID NUMBER	1	2	3	4	5	6
SDC No.						
SDC No.						
SDC No.						

EXAMPLE

COMMENTS/DISCREPANCIES

_____
_____
_____
_____
___

Verified By: _____ **Date:**_____

Discrepancies Noted: (Circle One) **YES** **NO**

Figure F-6: Inspection Log

Time/Date	Inspector(s)	EDT Facility Area(s) Inspected	Observation Made	Date/Nature of Repair(s) or Remedial Action(s)

EXAMPLE

This document contained Export Control/International Traffic in Arms Regulations Information.

Part G: Contingency Plan and Emergency Procedures [401 KAR 38:090, Section 2(7), 34:040, Sections 1-7, and 34:190 Section 7 & 40 CFR 264.50-264.56 and 264.196]

The EDT control room, in accordance with 401 KAR 34:040 and 40 CFR 264.53(a), maintains a copy of this EDT Facility Contingency Plan. This plan minimizes hazards to human health and the environment due to fires, explosions, and unplanned sudden or non-sudden releases of hazardous wastes or hazardous waste constituents to air, soil, surface water, or groundwater. The EDT Facility Contingency Plan (hereafter referred to as "Contingency Plan") serves as a stand-alone document, but the EDT Facility may rely on other resources and personnel from BGAD, BGCA, and/or BGCAPP Main Plant based on the nature of the emergency or contingency.

This Contingency Plan describes the response by EDT Facility personnel to fires, explosions, or any unplanned sudden or non-sudden release of hazardous waste or hazardous waste constituents to air, soil, surface water, or groundwater at the facility. This plan contains information in accordance with the requirements for a contingency plan and emergency procedures (i.e., 401 KAR 34:040, 401 KAR 38:090, Section 2, (7); and 40 CFR 264 Subpart D). Since the EDT Facility is located on a U.S. Army installation, Army environmental regulations apply, and this document complies with these requirements as well.

The wastes and hazardous materials managed and treated by the EDT Facility include mustard agent, explosives, acids/caustic materials, solids containing metals generated in the OTS, and materials containing organic compounds (e.g., solvents).

G-1: General Information [401 KAR 34:040, Section 3 and Section 7 & 40 CFR 264.52 and 264.56]

The BGAD is located in the Blue Grass region of east central Kentucky in the approximate center of Madison County. The BGAD encompasses 14,596 acres and is approximately 30 miles southeast of Lexington, 85 miles southeast of Louisville, and 90 miles south of Cincinnati, Ohio. It is adjacent to the southeastern portion of Richmond, Kentucky, and approximately 5 miles southeast of the center of Richmond and 10 miles northeast of Berea, Kentucky. Agricultural land, industrial land uses, low-density residential areas, some commercial activities, and public areas surround the BGAD and include some recreational activities and areas.

The BGAD, a U.S. Army installation, is a Tier 1 Joint Munitions and Lethality Life Cycle Management Command (JM&LLCMC) depot with a primary function of providing munitions, chemical defense equipment, and special operations support to the DOD. The BGAD mission includes storage of conventional munitions for training and major force deployment and serving as the Army's major storage site for chemical defense equipment. The conventional munitions operations at the BGAD include shipping and receiving, storage, maintenance, inspection, and demilitarization. The JM&LLCMC is a U.S. Army organization that is subordinate to the Army Materiel Command (AMC). The Program Executive Office, Assembled Chemical Weapons Alternatives (PEO ACWA) is administratively assigned to the U.S. Army Acquisition Support Center but reports directly to Department of Defense (DOD). The PEO ACWA has responsibility for destruction of the chemical stockpile remaining at the BGAD.

This document contained Export Control/International Traffic in Arms Regulations Information.

The Blue Grass Chemical Activity (BGCA) is a tenant organization of the BGAD, reporting to the U.S. Chemical Materials Activity (CMA). The primary mission of the BGCA is the safe storage and monitoring of the chemical weapons stockpile located within a secured site in the northern part of the BGAD.

This Contingency Plan and the associated emergency procedures are applicable to the EDT Facility. BPBG Team is responsible for designing, constructing, systemizing, operating, and closing the EDT Facility under contract with the PEO ACWA. The EDT Facility is a tenant of the BGAD and is located adjacent to the BGCA storage area and wholly within the BGAD's boundary. Figure G-1 is a map of the BGAD that shows the location of the EDT Facility, BGCAPP Main Plant and the surrounding area. The BPBG Team contracted to design, construct, systemize, operate, and close the EDT Facility. The purpose of the EDT Facility is to destroy the M110 155mm H-filled projectiles, over-packs, and DOT bottles.

The destruction process results in the generation of secondary wastes during treatment. The EDT Facility treats mustard-filled projectiles, over-packs, and DOT bottles. The BGAD and BPBG Team are proposing that construction and operation of the EDT Facility occur under the authority of a RCRA Hazardous Waste Management (Part B) Modification to the existing BGAD RCRA Permit No. KY8-213-820-105.

The Commonwealth of Kentucky lists the chemical agent mustard as a hazardous waste [401 KAR 31:040, Lists of hazardous waste, Section 7 – Waste Number N003]. In addition to the listed waste and the associated derived wastes, treatment of the chemical agent – H munitions may produce other non-agent hazardous wastes (e.g., Waste Numbers D001, D003, D004, D005, D006, D007, D008, D009, D010, D011, D026, and/or D037) while laboratory and maintenance and miscellaneous activities are expected to add other waste numbers (e.g., D001, D002, D003, D004, D005, D006, D007, D008, D009, D010, D011, D022, D026, D027, D028, D029, D030, D037, D039, D040, and/or F001–F005).

The mustard-filled items are transported in EONCs by EDT Facility personnel over a restricted access road to the EDT Facility. This movement will occur only during daylight hours. The items then are transported by EDT Facility personnel in EONCs from the BGCA storage igloo apron to the EDT Service Magazine, removed from the EONCs and placed into the RCRA permitted Service Magazine to await movement to the EEB for final treatment. This movement to the EEB for treatment will occur routinely and is considered part of the continuous treatment process.

This Permit Modification to the existing BGAD RCRA Hazardous Waste Management Permit requests movement of these chemical items be conducted without a work plan or notification of movement as currently used for chemical munitions movements. This change is authorized under existing environmental regulations and statutes for a permitted facility treating chemical munitions (i.e., demilitarization facility) and eliminates potential security concerns associated with announcements of routine chemical munitions movements which include date and/or time [KRS 224.50-130(5)].

The facility for which this Permit Modification is requested includes transportation from the chemical storage igloos to hazardous waste storage on the EDT Facility, hazardous waste storage (Service Magazine) and destruction/treatment in the SDC [a Miscellaneous (Subpart X) Treatment Unit] located in the EDT Facility. Munitions are loaded from storage into enhanced on-site containers (EONCs) and moved over a restricted access road to the Service Magazine.

The hazardous waste treatment and storage areas and the transportation routes for incoming chemical agent munitions, incoming hazardous materials, and outgoing hazardous wastes are shown on Figure G-2.

This document contained Export Control/International Traffic in Arms Regulations Information.

G-2: Emergency Coordinators (ECs) [401 KAR 34:040 Section 6 & 40 CFR 264.52(d) and 264.55]

The Emergency Coordinator (EC) for the BGAD and the organizations on the installation are the responsibility of the BGAD Commander. Trained ECs perform the EC duties under the command and control of the BGAD Commander who is the overall Scene Coordinator (SC) for incidents and responses on the installation to include those involving the tenant organizations operating on the BGAD. The authority and responsibilities of the EC include:

a. Coordinating overall incident responses
b. Assessing the immediate threat to human health or the environment within and beyond the boundaries of the installation
c. Determining whether the emergency involves a spill of a reportable quantity (RQ) of waste
d. Determining when to notify offsite agencies
e. Ensuring proper cleanup equipment and procedures are available
f. Providing assistance, personnel, and equipment for response to emergency situations and commits resources as needed based upon the situation

The EDT Facility has trained and equipped facility personnel on the hazardous material (HAZMAT) response team (HMRT) assigned to each of the operating shifts. If a fire, explosion, spill, or release occurs at the EDT Facility, the EDT HMRT provides the initial response. The Shift Plant Manager (SPM), or alternate, on duty at the time of the emergency becomes the EDT Facility Incident Commander, notifies the OC and the emergency coordinator (EC), or alternate, and begins providing information related to the EDT Facility incident. The EDT Facility Incident Commander also notifies the Deputy Plant Manager for the EDT Facility who serves as an EC for BGCAPP. In this role, the Deputy Plant Manager provides advice, informs and coordinates with BGCAPP management, and obtains resources from within BGCAPP that are not organic to the EDT Facility as necessary.

The EDT Facility Incident Commander obtains additional resources or capabilities (if needed) from the BGAD (e.g., BGAD fire department support, security, BGCA team for response to leaking chemical munitions, and medical treatment or patient transport). BGCAPP Main Plant equipment and resources also may be used to support the EDT Facility.

If the primary EDT Facility Incident Commander (i.e., SPM) is not available or is injured, the alternate is the Area Supervisor (AS). Like the SPM, an AS is always on duty. The emergency response organization for the EDT Facility is depicted in Figure G-3.

The EDT Facility Incident Commander has the authority to commit the necessary EDT Facility resources to implement this contingency plan.

G-3: Implementation [401 KAR 34:040 Section 2 & 40 CFR 264.51(b)]

The EDT Facility Incident Commander implements the Contingency Plan when a fire, explosion, or release of hazardous waste or hazardous material could threaten human health or the environment.

The implementation of the Contingency Plan occurs in the following specific situations at the discretion of the EDT Facility Incident Commander:

This document contained Export Control/International Traffic in Arms Regulations Information.

a. An unplanned explosion occurs at or near the EDT Facility
b. A fire threatens the EDT Facility or the route to the facility
c. Use of water or chemical fire suppressant on a fire could result in contaminated runoff
d. An imminent danger exists that an explosion could result in a release of hazardous constituents
e. A spill of hazardous material or wastes results in a fire, explosion, or potential fire or explosion
f. A spill of hazardous material or wastes is contained onsite, but may potentially contaminate soils, groundwater, or surface water resources

The BPBG Team provides copies and revisions of the Contingency Plan to the BGAD for use and/or distribution to organizations that may support or be involved in an emergency response at the EDT Facility. The BPBG Team ensures distribution of the Contingency Plan copies to the following areas (as a minimum):

a. BGCA, Commander, Directors, Chiefs
b. BGAD, Commander, Fire Department, Environmental Office, Directors, Chiefs, and Tenant Organizations
c. Local Emergency Planning Committee (LEPC) of Madison County, to include local authorities and hospitals
d. Kentucky Emergency Response Commission
e. Kentucky Department of Environmental Protection, Division of Waste Management
f. EPA Region IV (as needed)

G-4: Emergency Response Procedures [401 KAR 34:040 Section 7 & 40 CFR 264.56]

The EDT Facility personnel monitor and provide for spill prevention, countermeasures, and response for fuel/oil stored onsite; refueling operations; management of hazardous wastes; and unplanned discharges. The Spill Prevention Control and Countermeasures (SPCC) Plan (24915-00-G01-GGEN-00012) provides the primary guidance for avoiding a spill or unplanned release of hazardous materials (e.g., from secondary containment, during re-fueling) and provides environmental procedures and requirements for inspections and specific procedures for activities with the potential for an unplanned release.

This Contingency Plan provides for those incidents not prevented by the SPCC Plan and includes emergency notification requirements, organization, supporting activities, and response procedures. The EDT Facility personnel will provide emergency response for hazardous materials releases at the EDT Facility.

This document contained Export Control/International Traffic in Arms Regulations Information.

G-4a: Notification [401 KAR 34:040 Section 7 & 40 CFR 264.56(a)(1)-(2)]

The EDT Deputy Plant Manager or alternate receives a report from the first observer or supervisor when a fire, explosion, or release of hazardous material/hazardous material constituent occurs at or near the EDT Facility. The EDT SPM or alternate assumes the responsibilities of the EDT Facility Incident Commander and assesses the situation, determines the appropriate response, and notifies the OC of the incident. The EDT Facility Incident Commander coordinates and requests support from the OC for emergencies governed by the Contingency Plan, and for response to releases/spills beyond the EDT Facility responders' capability. The OC oversees EDT emergency response activities, makes notifications to state and local agencies, and determines whether to request support from organizations outside the BGAD. Notification will be performed in accordance with the notification call-down instructions within the EDT operational procedure.

Public address announcement, two-way radio, cellular phone, and/or audible alarm notify EDT Facility personnel throughout the facility of the emergency. The announcement or signal contains information for plant employees regarding response, evacuation, or additional instructions.

G-4b: Identification of Hazardous Materials [401 KAR 34:040 Section 7 & 40 CFR 264.56(b)]

The EDT Facility Incident Commander notifies the OC and provides information gathered from initial reports of observers and personnel. Following initial notification, the Incident Commander activates the EDT HMRT and gathers additional information to identify and characterize the nature and extent of the hazardous materials involved in the emergency. The EDT Facility Incident Commander can identify and quantify the hazardous waste released by any of the following methods, as appropriate:

(1)Consulting shift personnel in the vicinity of the emergency situation

(2)Personal visual observations

(3)Reviewing operating records (for hazardous materials or wastes in storage)

The Incident Commander relies on the initial reports of personnel observing the emergency to provide information about the extent of the release. The Incident Commander briefs the EDT HMRT Leader and the OC using the initial information. The EDT HMRT gathers and reports additional information after activating and arriving at the scene of the emergency. The Incident Commander uses this new information to further characterize the material(s) released, the source, and to quantify the amount and areal extent of any environmental release.

G-4c: Hazard Assessment [401 KAR 34:040 Sections 7 & 40 CFR 264.56(c)]

The EDT Facility Incident Commander assesses possible hazards, direct and indirect, to human health and the environment. This assessment should consider the following:

(1)The potential for an unplanned explosion in the EDT Facility is remote. However, this hazard is considered a possible contingency due to the presence of explosives. The presence of explosives and mustard can increase the intensity and potential damage from a fire.

This document contained Export Control/International Traffic in Arms Regulations Information.

(2)The possible hazards associated with fires (i.e., unless chemical agents are involved) include the initiation of explosions, burns, smoke inhalation, and ignition of adjacent buildings.

(3)Spills of hazardous materials introduce the possibility of impacts to human health and the environment as releases may flow into nearby waterways (e.g., the unnamed tributary of Muddy Creek or the BGCAPP Main Plant storm water detention basin) and subsequently affect the environment and human health. The likelihood of these impacts is very low due to EDT Facility design features. Examples of these design features may include lined (i.e., with agent-resistant coating), concrete secondary containments; and automatic and manual shut-offs (in the waste processing area). In addition, spills can provide fuel for subsequent fires if the introduction of an ignition source occurs near a spilled flammable material.

If the release is airborne or may become airborne, the OC can model the release and determine whether there is any potential impact to areas surrounding the BGAD. The BGAD, BGCA, and the BPBG Team also use modeling results to make evacuation decisions concerning the EDT Facility personnel, BGCAPP Main Plant personnel, BGAD and BGCA personnel, and areas outside the BGAD boundaries. This modeling information also serves as a basis for decisions concerning notifications to local, state, and/or federal agencies.

G-4d: Control Procedures [401 KAR 34:040 Section 7 & 40 CFR 264.56]

(1) EDT Facility Incident Commander

The general duties of the EDT Facility Incident Commander, or alternate, during an emergency at the EDT Facility are:

(a) Use EDT Facility alarms and communication systems to notify and safely direct remaining EDT Facility personnel.

(b) Notify the OC and the Deputy Plant Manager for the EDT Facility for events covered by this Contingency Plan that could threaten human health or the environment beyond the EDT Facility.

(c) Identify the character, exact source, amount, and extent of materials released from the stack, spills, fires, or explosion.

(d) Assess possible hazards, both direct and indirect, to human health or the environment.

(e) Take all reasonable measures necessary to ensure fires and releases do not occur, recur, or spread to other areas of the EDT Facility.

(f) Monitor equipment for leaks, pressure buildup, ruptures, etc.

(g) Instructs control personnel to stop EDT Facility operations in response to an emergency.

(h) Provide for treating, storing, or disposing of recovered waste and contaminated material after an emergency.

(i) Ensure wastes potentially incompatible with the released material are not treated, stored, or disposed until cleanup procedures are complete within the area(s) affected by the release.

This document contained Export Control/International Traffic in Arms Regulations Information.

(j) Ensure emergency equipment used during the emergency is replaced or cleaned and ready for use before operations resume in the area(s) of the EDT Facility affected by a release.

(k) Ensure the notifications in the EDT Call-Down Roster are initiated beginning with EDT Deputy Plant Manager.

(2) EDT Shift Personnel Supporting the Incident Commander

EDT Facility shift personnel with the additional duty of supporting the EDT Facility Incident Commander during emergencies include the following:

(a) EDT On Scene Commander (OSC): The OSC receives direction from, and reports to, the EDT Facility Incident Commander. Immediately upon initiation of the Contingency Plan, the Incident Commander designates an Area Supervisor to be the OSC. The OSC then reports to the scene of the fire, explosion, or release and establishes an on-scene command post, assumes control of the activities of the first responders, and coordinates the actions of the EDT HMRT.

(b) EDT Control Room Operator: The SPM designates a control room operator to assume responsibility for operation of the control room as the SPM assumes the responsibilities of EDT Facility Incident Commander. The control room operator shuts down SDC operations and takes other actions as directed by the EDT Facility Incident Commander.

(c) EDT HAZMAT Response Team (HMRT) Leader: The EDT HMRT Leader receives direction from, and reports to, the OSC. Each shift has an individual assigned as an EDT HMRT Leader. The EDT HMRT Leader directs the activities of the HMRT. The EDT HMRT Leader and the OSC may be the same person.

(d) EDT HMRT: Each shift has EDT Facility personnel assigned as EDT HMRT members. The EDT HMRT is comprised of EDT Facility personnel specifically trained and equipped to respond to emergency incidents involving hazardous material or hazardous material constituents at the EDT Facility. The EDT HMRT is organized to allow the appropriate level of response to a contingency. EDT HMRT members receive direction from the EDT HMRT Leader.

(e) The EDT HMRT mitigates uncontrolled chemical agent and hazardous material releases by assisting with the identification of the agent(s)/material(s), stopping the release of non-agent hazardous materials and chemical agent, assessing the contamination, and performing the cleanup/treatment/containerization of cleanup materials for disposal. It is the responsibility of the HMRT to contain releases, cleanup and decontaminate the area of the release, package cleanup and decontamination residuals, decontaminate equipment used for the response, and inform the EDT HMRT Leader about the type, quantity, source, and behavior of the released agent(s)/material(s).

(f) EDT Safety Officer: The EDT shift safety representative becomes the Safety Officer after implementation of the Contingency Plan. The Safety Officer reports to the on-scene command post to provide safety assessments and advice (e.g., required PPE and response equipment). The Safety Officer has the authority to alter, suspend, or terminate any activities immediately dangerous to life and health and/or that involve an immediate danger to personnel.

This document contained Export Control/International Traffic in Arms Regulations Information.

(g) EDT Environmental Compliance Specialist: The EDT Environmental Compliance Specialist reports to the on-scene command post to assess environmental impacts and provide advice. The EDT Environmental Compliance Specialist provides technical advice in the areas of spill cleanup, property decontamination, packaging waste materials, and waste disposal.

(3) Emergency Situations

The following paragraphs describe the emergencies that may affect the EDT Facility and provide general response information for each.

(a) **Explosion:** The handling areas for agent-filled items in the EEB have fire suppression sprinkler systems installed to suppress fires associated with these operations and decrease the risk of unplanned explosions. If an unplanned explosion occurs at the EDT Facility or on BGAD, the EDT Facility Incident Commander decides, in coordination with the OC, whether the nature, location, and size of the explosion warrant an evacuation or shelter-in-place. If the Contingency Plan is activated, then EDT Facility and treatment systems are brought to a ~~s~~afe" mode as quickly as possible and work ceases to await instructions for evacuation or shelter in-place. Chemical Surety Material will be secured to the maximum extent possible.

If the explosive hazard exists inside the facility, or nearby, all EDT Facility personnel immediately evacuate or shelter-in-place and all efforts focus on injured personnel and the prevention of further damage or possible injury to EDT Facility personnel.

(b) **Fire:** The design of the EDT Facility provides fire protection through automatic sprinklers, hydrants and a fire alarm notification system. EDT Facility has fire hydrants located on two sides of the building containing the SDC and nearby in the BGCAPP Main Plant area to support firefighting. Trained EDT Facility personnel can use fire extinguishers to put out smaller fires that hand-held fire extinguishers can extinguish. The EDT Facility Incident Commander reports any fire on the EDT Facility to the OC. If a fire (other than a small fire easily controlled by hand-held fire extinguishers) occurs within the SDC processing areas, the EDT Facility Incident Commander orders the treatment systems to be shut down and placed into a ~~s~~afe" mode, and the evacuation or the shelter in-place of personnel in accordance with the daily plan. If the fire is small and easily extinguished or occurs elsewhere (e.g., on the BGCAPP Main Plant or the BGAD), the Incident Commander makes the decision whether the nature, location, and size of the fire warrants the evacuation and/or shut down of SDC waste processing systems.

Additional fire response capabilities are available from the BGAD Fire Department. The BGAD Installation Spill Contingency Plan (ISCP) outlines the installation firefighting response capabilities.

(c) **Spills and Releases:** The EDT Facility Incident Commander directs that routine work in the spill or release area ceases and evacuation and treatment of injured personnel begins; then the EDT Facility Incident Commander reports any hazardous material spills/releases to the OC.

The EDT Facility Incident Commander may direct the EDT HMRT to respond to spill or release of hazardous materials. If a chemical agent release occurs outside of engineering controls or a chemical agent injury occurs anywhere at the EDT Facility, the BGAD Chemical Accident or Incident Response and Assistance (CAIRA) Plan activates in accordance with this Contingency Plan.

This document contained Export Control/International Traffic in Arms Regulations Information.

The BPBG Team continues to advocate using a definition for a ~~r~~release," which is revised from that currently used by KDEP. The current KDEP definition of release applied to chemical storage activities includes ~~a~~ny" measureable agent which has been interpreted to mean any chemical agent measured in air above 0.25 STEL (i.e., a reliable detection level for the MINICAMS®) regardless of location. For the EDT Facility it is proposed that the same definition of release used for Swift Solution apply (i.e., 0.25 STEL measured outside of the glove box or the engineering control used for this project). Application of this same definition of release would result in measureable agent outside of engineering controls (i.e., 0.25 STEL measured outside of the engineering control provided by the cascade ventilation system). Following the completion of the emergency response activities, the EDT HMRT ensures spill and cleanup residue is collected and containerized for treatment and/or disposal through a appropriately permitted, commercial TSDF. Larger spills of industrial chemicals may require assistance from the BGAD to mitigate and control the release prior to cleanup by the EDT Facility HMRT. If this situation occurs, BGAD assistance will be requested from the OC. Releases or spills of hazardous material (including hazardous wastes) do not activate the BGAD/BGCA CAIRA Plan unless the release or spill involves chemical agent.

The control room places the system in standby mode or shutdown as directed by the EDT Facility Incident Commander. If a spill, leak, or release could threaten human health or the environment, the EDT Facility Incident Commander notifies the OC. The BGAD Emergency Coordinator (EC) makes the decisions concerning notifications of organizations outside of the BGAD, and makes the required notifications.

If the environmental release involves a chemical agent, the BGAD EC may direct implementation of the BGAD/BGCA CAIRA Plan. The BGAD/BGCA CAIRA Plan provides detailed procedures that encompass the various aspects of emergency response, including notification, mobilization, PPE requirements, hazard assessment, emergency response, and recovery. The BGAD has emergency support agreements with Madison County and City of Richmond Fire Departments for additional support if the OC decides it is required. Appendix G-1 outlines the EDT Facility general emergency response actions.

G-4e: Prevention of Recurrence or Spread of Fires, Explosions or Releases [401 KAR Section 7 & 40 CFR 264.56(e)]

The EDT Facility Incident Commander ensures any wastes released from waste processing systems or stored containers are collected and placed into containers or portable tanks. The Incident Commander directs that these contained wastes are properly stored and that other containers damaged or subject to damage during the emergency are removed and isolated to prevent additional releases or damage. The EDT HMRT, under supervision of the HMRT Leader, performs this work and, if beyond the capabilities of the EDT HMRT, with support personnel and equipment provided by the BGAD. The EDT Incident Commander requests this additional support from the OC. Typical emergency response tasks performed by the EDT HMRT and control room include the following actions:

(1)Removing and isolating leaking containers

(2)Transferring waste from leaking containers to new containers

(3)Constructing temporary dikes to control leaks or spills and preventing the flow of hazardous waste or materials from reaching waterways

(4)Using absorbents or booms to control flow of wastes or other hazardous materials

This document contained Export Control/International Traffic in Arms Regulations Information.

(5)Removing and placing into containers/portable tanks the wastes leaked from process equipment or storage areas

(6)Performing visual observations and monitoring of process and fire control equipment to ensure processes and equipment are functioning properly and to ensure the need for further response actions is minimized

These control room and HMRT activities ensure additional fires, explosions, or releases do not occur, reoccur, or spread from other areas into waste storage or processing areas.

The EDT Facility, as a tenant organization on the BGAD, receives fire/emergency medical service, HAZMAT response, security/law enforcement, CAIRA, and incident cleanup support from the OC, if requested by the EDT Facility Incident Commander. The EDT Facility Incident Commander also coordinates hospital and additional medical/ambulance services through the OC to align and comply with BGAD's emergency support agreements.

Procedures for any operations involved in the emergency response will be re-evaluated (e.g., container management and transport, fuel tank filling, and emergency response) and revised if appropriate prior to resuming operations. Prior to placing the affected area back into service, an incident investigation and after-action assessment report with findings and recommendations (i.e., to reduce or mitigate a recurrence) is prepared by the EDT Incident Commander. The Project Manager for the BPBG Team and the BGAD Commander or EC review and approve the after-action assessment report and ensure, prior to resuming waste operations, all damaged equipment is repaired or replaced and a safe environment is provided for EDT Facility personnel.

G-4f: Storage and Treatment of Released Material [401 KAR 34:040 Section 7 & 40 CFR 264.56(g)]

Immediately following the incident, the Waste Manager arranges for treatment, storage, or disposal of recovered waste, contaminated soil, surface water, and any other contaminated material. The EDT Environmental Compliance Specialist(s) conducts minor incident cleanups with trained project personnel and equipment and, for larger incidents, uses support or contracts available through the OC and/or approved/qualified contractors possessing applicable specialty skills. The Waste Manager or designee uses the available <90-day storage areas to store contaminated wastes from emergency response activities prior to offsite shipment and disposal. The BPBG Team uses appropriately permitted, commercial TSDFs for waste disposal.

G-4g: Incompatible Waste [401 KAR 34:040 Section 7(6) & 40 CFR 264.56(h)(1)]

If the incident-affected area contains wastes stored prior to the event, EDT Facility personnel ensure the stored wastes are compatible with the wastes from the emergency or remove the previously stored wastes. The EDT Facility uses only new or thoroughly cleaned, ~~u~~sed" portable tanks/containers to contain hazardous materials/waste recovered during the emergency response. EDT Environmental Department personnel ensure:

(1)Adequate characterization of wastes from the cleanup prior to storing with other wastes

(2)Wastes are not co-mingled with other EDT wastes

(3)Wastes are compatible with waste containers or tanks used for storage

(4)If the wastes from the cleanup must be stored near or in the same general area as other EDT wastes, the following precautions apply:

This document contained Export Control/International Traffic in Arms Regulations Information.

(a) Store liquids in either drums, tanks, or other containers in portable containments or on containment pallets

(b) Do not store acidic wastes in unlined metal containers or tanks

(c) Separate cleanup wastes from other stored wastes by a berm, dike, wall, containment pallet or other physical barrier so that leaking wastes cannot co-mingle

G-4h: Post-Emergency Equipment Maintenance [401 KAR 34:040 Section 7 & 40 CFR 264.56(h)(2)]

During the decontamination process, personnel remove PPE used in the emergency response and place the used PPE into plastic bags. The EDT Facility personnel use information concerning the nature of the emergency response and the involved hazardous materials/waste to characterize the disposable PPE and other items/equipment for the appropriate treatment/disposal method(s). The environmental personnel assigned to the EDT Facility provide waste characterization assistance.

EDT Facility personnel and other responders decontaminate non-disposable equipment, such as spark-proof shovels, and vehicles, at a site on the EDT Facility established by the OC and SDC Incident Commander. The selected decontamination site must minimize the exposure of uncontaminated employees, equipment, and the environment. The decontamination process consists of at least one wash and rinse and considers the extent of contamination and the type of equipment requiring decontamination. The wash/rinse waters are contained within a temporary/portable or permanent wash basin(s) of appropriate materials of construction and containment volume to prevent runoff or infiltration into soils and surface water. EDT personnel sample wash and rinse water and decontamination materials from the decontamination process for appropriate characterization and selected disposal method(s).

Prior to resuming operations, the EDT Deputy Plant Manager, with the assistance of BPBG Team‘s Safety, Environmental, emergency response, and QA personnel (and parallel BGAD organizations) conduct an inspection of all safety and emergency response equipment. The EDT Deputy Plant Manager ensures EDT Facility personnel restock, clean, inspect, and prepare for subsequent use, all safety equipment and PPE used in the emergency prior to restarting operations, if operations were stopped due to the emergency.

G-4i: Container Spills and Leakage [401 KAR 34:180 Section 2 & 40 CFR 264.171]

If a release of hazardous waste or hazardous waste constituents results from a leaking container, the remaining contents of the container are either transferred to a new container that is in good condition, or the leaking container is placed into another over-sized container (i.e., over-packed). The trained EDT responder cleans up the leaked waste or waste constituents after establishing control of the container leak. Cleaning and decontamination of the spill or leak area follows the placement of the waste or waste constituents into new or cleaned, previously used container(s)/tank(s).

G-4j: Tank Spills and Leakage [401 KAR 34:190 Section 7 & 40 CFR 264.196]

Not Applicable. The EDT Facility is not permitting tanks or tank systems to store or treat hazardous wastes.

This document contained Export Control/International Traffic in Arms Regulations Information.

G-4k: Provisions for Waste Pile Soils and Leakage [401 KAR 34:210 Sections 2 and 4 & 40 CFR Subpart J]

Not applicable. This provision does not apply to the EDT Facility; waste piles are not used at this facility.

G-4l: Provisions for Surface Impoundments, Spills, Leakage and Sudden Fluid Level Drops [401 KAR 34:200 Sections 2 and 5 & 40 CFR Subpart K]

Not applicable. This provision does not apply to the EDT Facility; surface impoundments are not used at this facility.

G-4m: Provisions for Landfill Leakage [401 KAR 34:230 Section 13 & 40 CFR Subpart L]

Not applicable. This provision does not apply to the EDT Facility; landfills are not used at this facility.

G-4n: Requirements for Hazardous Wastes F020, F021, F022, F023, F026, and F027 [401 KAR 34:190, 34:200, 34:210, and 34:230 & 40 CFR Subpart N]

Not applicable. This provision does not apply to the EDT Facility, as it does not place, treat, or generate these cited F wastes in onsite tank systems.

G-5: Emergency Equipment [401 KAR 34:040 Section 3(5) & 40 CFR 264.52e]

The EDT Facility personnel establish procedures for hazardous waste management areas (e.g., permitted container storage in the Service Magazine, <90 Day Container Storage Areas and Satellite Accumulation Areas) and spill response kits for project equipment and hazardous material storage areas. Spill response kits contain appropriate materials to respond to the nature of the spill for the area in which the kit is located.

Fire extinguishers are located throughout the site and inside the SDC buildings and vehicles.

The EDT Facility employs radio, telephone, and verbal/public address signals to advise employees outside buildings of an incident or potential fire, explosion, or release. Alarm systems for fire or unintended release of a hazardous material/waste/substance augment these communication means. The BGAD operates a siren warning system to notify the installation and surrounding area [coordinated with the Chemical Stockpile Emergency Preparedness Program (CSEPP) and Madison County Emergency Management Agency] of a chemical agent related incident.

This document contained Export Control/International Traffic in Arms Regulations Information.

At the EDT Facility, decontamination equipment is pre-staged for rapid response to areas where explosions, fires, or releases may occur. The EDT Facility personnel select emergency response equipment and decontamination materials based on the type and quantity of the hazardous waste or material involved in the emergency response. Additional emergency response equipment, decontamination equipment/materials, and showers are available through the OC if required. See Table G-1 for a listing of emergency response equipment and materials for the EDT Facility.

G-6: Coordination Agreements [401 KAR 34:040 Section 3 & 40 CFR 264.52(c)]

The EDT Facility, as a tenant activity of the BGAD, does not enter into coordination agreements with organizations outside of the BGAD. The EDT Facility receives additional emergency support from the BGAD, a fixed military installation with onsite capabilities for any potential emergency. These capabilities include the BGAD Provost Marshal and security force, the BGAD Fire Department (which also conducts emergency spill response), and the BGAD Health Clinic. Ambulance service is available for personnel transport to local hospitals. The Contingency Plan has been coordinated with each onsite agency with emergency response duties.

The BGAD maintains agreements with the following offsite emergency support activities.

a. Baptist Health Hospital, Richmond, Kentucky
b. Berea City, Kentucky, Police Department
c. Berea Hospital, Berea, Kentucky
d. Clark County Medical Center, Winchester, Kentucky
e. Kentucky State Police Post 7
f. Madison County Emergency Medical Services
g. Madison County, Kentucky Fire Department
h. Madison County, Kentucky Sheriff's Department
i. Meteorological Data and Meteorological Services
j. Mutual Support Agreement, Madison County, Kentucky
k. Richmond, Kentucky Fire Department
l. Richmond, Kentucky Police Department

The BGAD maintains current copies of the emergency support agreements.

G-7: Evacuation Plan [401 KAR 34:040 Section 3 & 40 CFR 264.52f]

The EDT Facility, in conjunction with the OC, identifies primary and alternate evacuation routes from the EDT site to pre-selected assembly (rally) points. The BGAD identifies the specific routes and assembly (rally) points at the beginning of the workday. The evacuation route may be changed during the workday based on activities and weather conditions. The evacuation routes for the EDT Facility are shown on Figure G-4.

Evacuation routes and assembly points will be posted in the EDT Facility. Signs are posted along the evacuation routes indicating the route and assembly point for that route. The need to evacuate, the selected evacuation route, and the designated assembly point will be communicated by siren/warning system, radio, voice, and/or public address.

This document contained Export Control/International Traffic in Arms Regulations Information.

The Shift Plant Manager, as the Incident Commander, or designee, directs evacuation from the EDT site based on information obtained from reports of a fire, explosion, or unplanned release of a hazardous material or hazardous material constituent. The EDT Facility Incident Commander may order a partial or full evacuation of the EDT Facility to the designated assembly point.

The BGAD EC directs evacuation from the BGAD based on information provided by the OC. BGAD Regulation 385-4, Evacuation and Accountability, describes the notification and process for accomplishing a partial or total evacuation of the BGAD. The BGAD CAIRA Plan describes ~~-s~~heltering in-place" as an alternative to evacuation.

If a fire, unplanned explosion, or release requires the evacuation of an area or the entire site, the EDT Shift Plant Manager, as Incident Commander, or alternate immediately notifies facility personnel, visitors to the plant, and the OC. The OC notifies the appropriate local authorities, in accordance with existing guidance. The OC also is responsible for notifying the appropriate agencies (see Emergency Response Agency Notification List) in Table G-2. The EDT Facility Incident Commander may assist in making these notifications (but only if BGAD EC requests assistance).

G-8: Required Reports [401 KAR 34:040 Section 7 & 40 CFR 264.56(i)]

EDT Facility personnel prepare a written follow-up report in addition to the verbal notifications initiated by the OC. All emergencies that require the implementation of the Contingency Plan or that involve the release of a hazardous waste equal to or exceeding an RQ require a written report within 15 days to KDEP, Division of Waste Management. The content of this Incident Report generally follows the format shown in Figure G-5 and is sent to:

Energy and Environment Cabinet
Director, Division of Waste Management
Department for Environmental Protection
200 Fair Oaks Lane, 2nd Floor
Frankfort, KY 40601

The EDT Facility personnel place a record of all emergencies requiring implementation of the Contingency Plan in the Facility Operating Record.

Figure G-1: EDT Facility BGAD Location

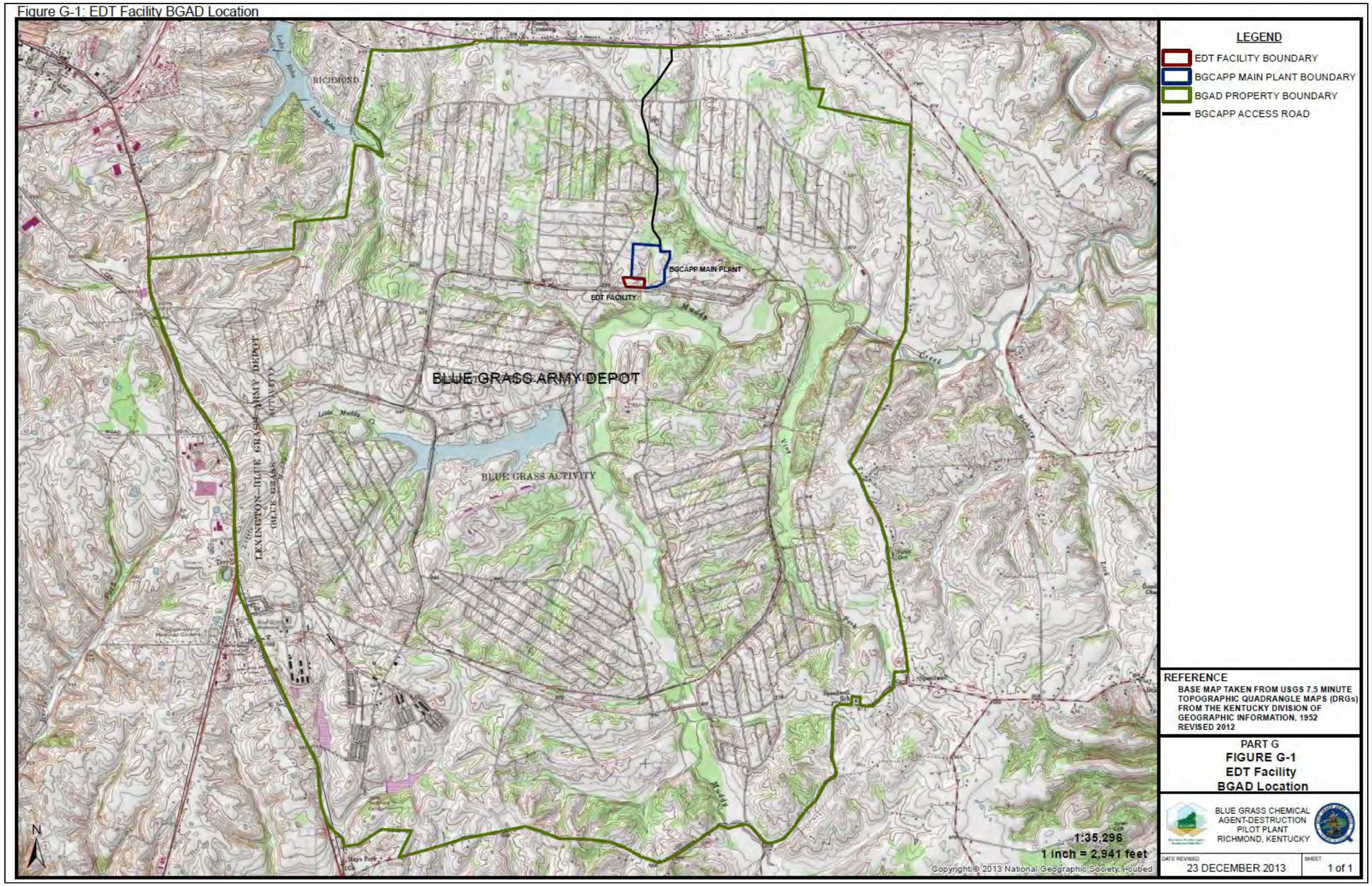

Figure G-2: Hazardous Materials/Waste Routes

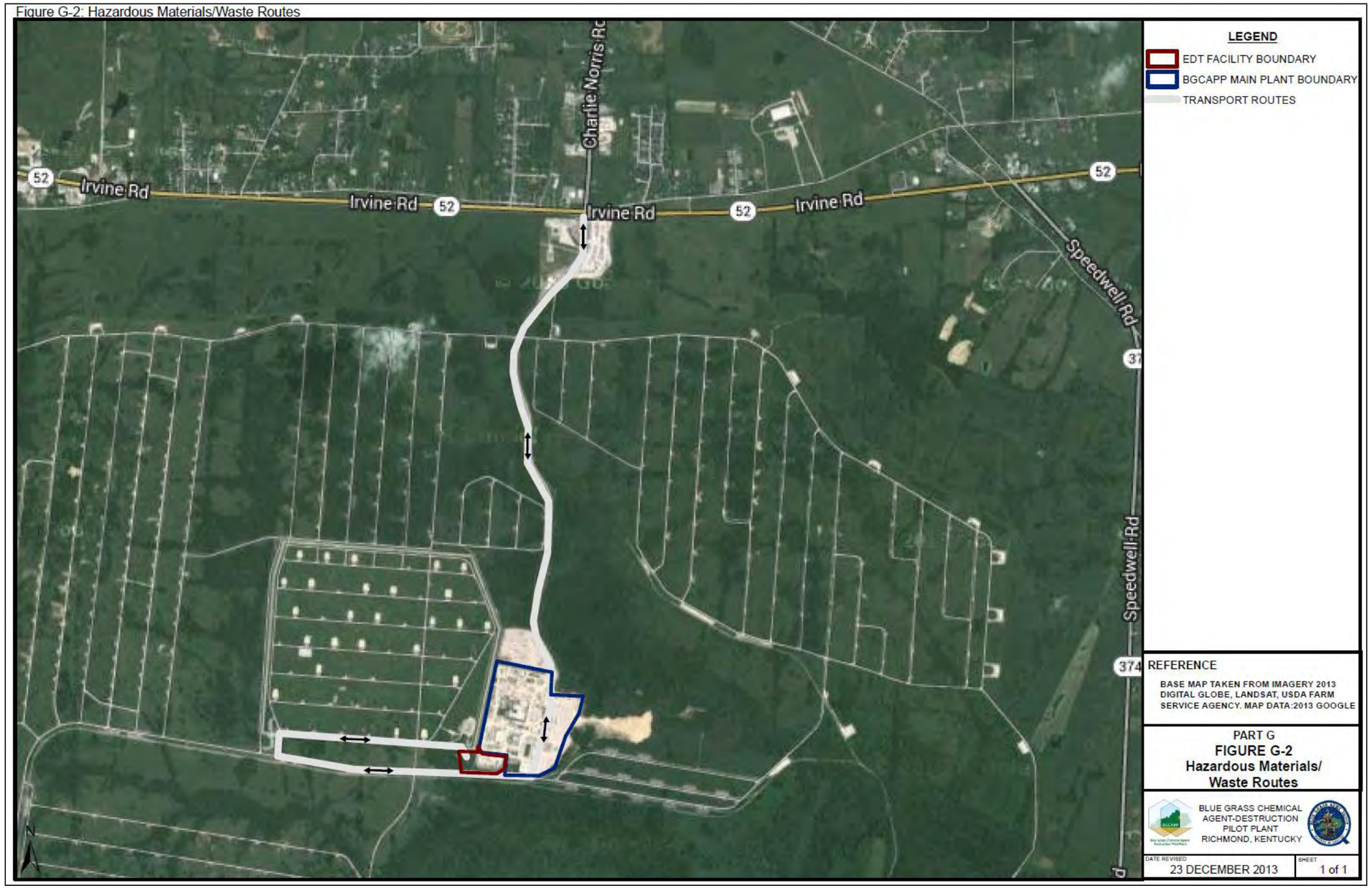

Figure G-3: EDT Facility Integrated Response Organization

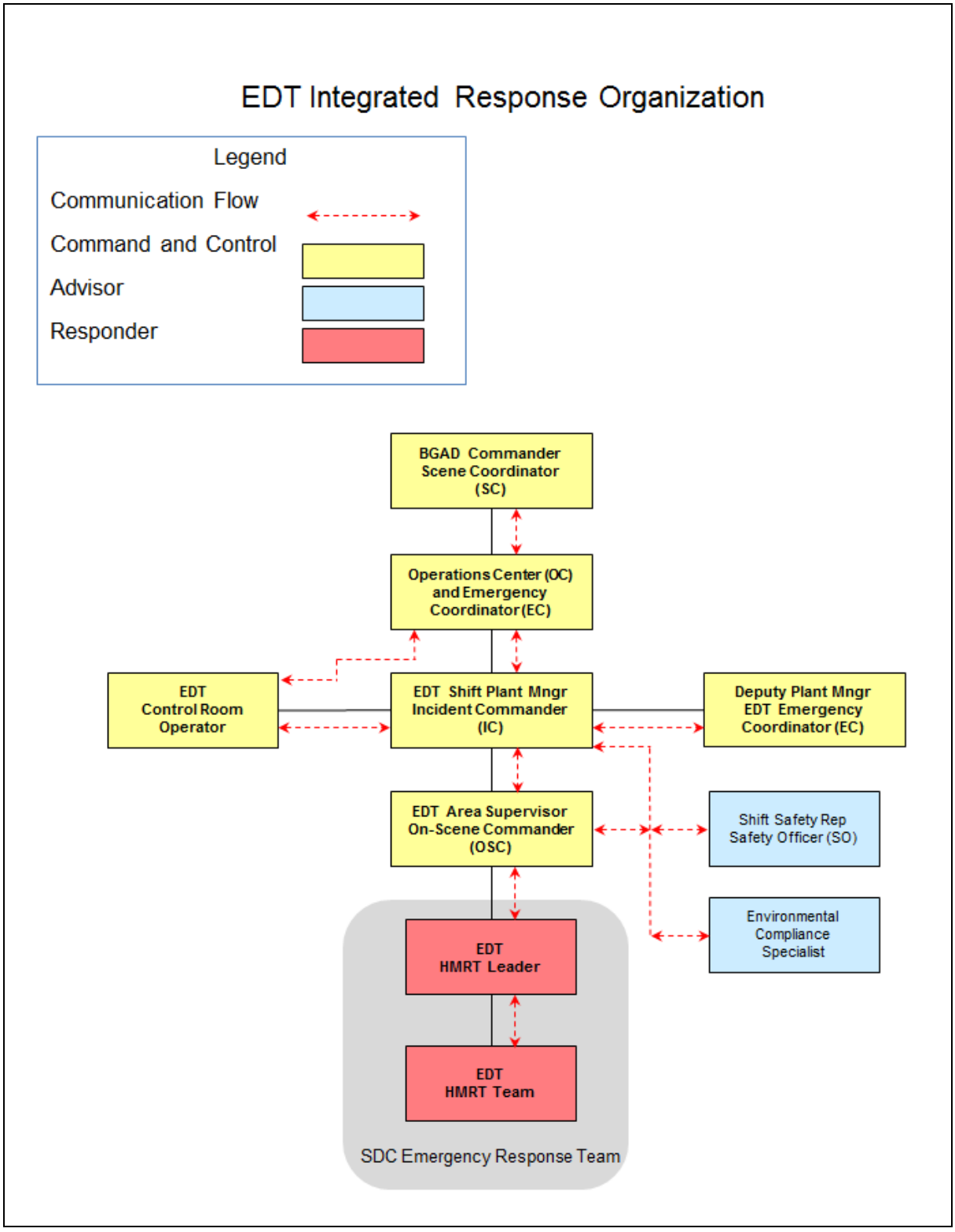

Figure G-4: Evacuation Routes Map

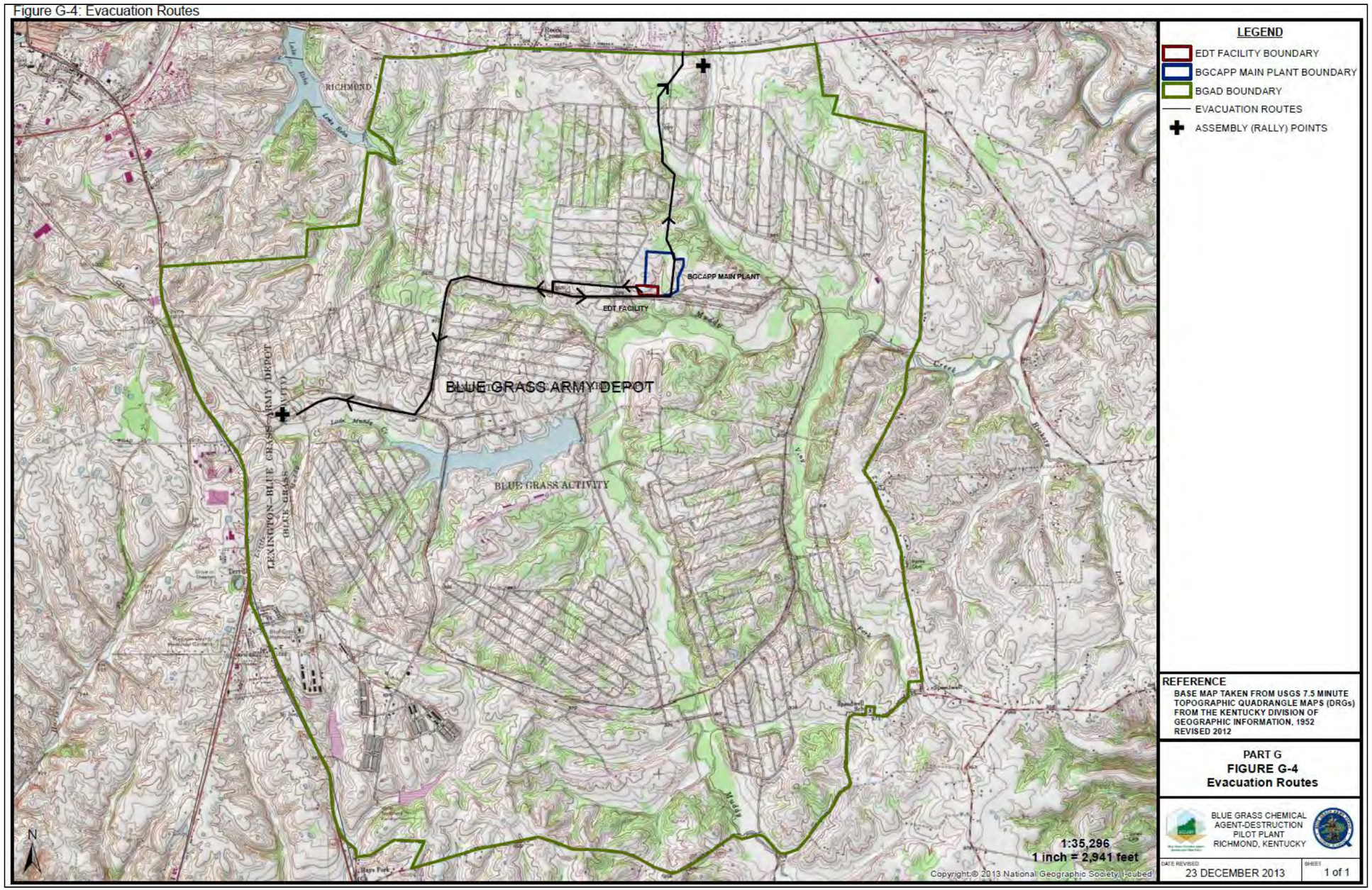

This document contained Export Control/International Traffic in Arms Regulations Information.

Figure G-5: Typical Incident Report

Name, address, and phone number of owner or operator

_____

_____

Name, address, and phone number of facility

_____

_____

Date, time, and type of incident (e.g., fire, explosion)

_____

_____

Name and quantity of material(s) involved

_____

_____

Extent of injuries (if any)

_____

_____

Assessment of actual or potential hazards to human health or the environment (if applicable)

_____

_____

_____

_____

Estimated quantity and disposition of material recovered from the incident

_____

This document contained Export Control/International Traffic in Arms Regulations Information.

Table G-1: EDT Facility, Non-Chemical Agent Response Emergency Equipment

Emergency Equipment	
Description	**Location**
Fire Engine/HAZMAT Response[1]	BGAD Fire Department
Drum Plug Kit	Near Container Storage Areas
Fire Extinguishers	Throughout EDT Facility and Within Vehicles
Fire Hydrants	Within EDT Facility and Nearby in BGCAPP Main Plant Area
Absorbent Sheets/Bags/Pads	Pre-staged at Designated Locations
Containment Booms	Pre-staged at Designated Locations
Granular Absorbent	Pre-staged at Designated Locations
Ambulance	BGCAPP Main Plant Medical Clinic or BGAD Health Clinic
PPE	Personnel Support Building (PSB), 02SF, EDT Support Building, EEB, and the Monitoring House
Containment Berms	Pre-staged at Designated Locations
Spill Kits	Pre-staged at Designated Locations
Emergency Medical Equipment	BGCAPP Main Plant Medical Clinic
EDT HMRT Pick-up Truck[2]	Within the EDT Facility
Emergency Response Vehicle(s) and Trailer[3]	BGAD and BGCA CAIRA Emergency Response Teams

NOTES:

[1] BGAD Fire Department equipment shown in the BGAD SPCC/ISCP.

[2] The EDT HMRT vehicle contains spill response materials for industrial spills and some emergency/rescue equipment.

[3] Emergency response vehicle(s) and trailer contain spill response materials for industrial and chemical agent spills/releases and emergency/rescue equipment including entry suits and self-contained breathing apparatus (SCBA).

This document contained Export Control/International Traffic in Arms Regulations Information.

Table G-2: Emergency Response Agency Notification List

Agency[a]	Phone Number
BGAD Fire Department[b]	911 (from facility phone) (859) 779-6911 (from off-post or cell phone)
Kentucky Department of Environmental Protection (KDEP), Environmental Response Team	(502) 564-2380 (Monday-Friday, 0730-1530)[c] (800) 928-2380 (24 hr.)
Kentucky Emergency Response Commission (ERC)[c]	(800) 255-2587
National Response Center (NRC)[d]	(800) 424-8802
Madison County 911 Center and Central Dispatch	(859) 624-4776
Local Emergency Planning Committee[e]	(859) 624-4787
State Fire Marshall[f]	(502) 564-3626
Motor Vehicle Enforcement[g]	(502) 564-3276
U.S. EPA, Region 4, 24-hr Spill Reporting[h]	(404) 562-8700
U.S. Coast Guard, 8th District, Marine Safety	(504) 589-6261
U.S. Army Environmental Center (optional)	(410) 436-4714
HQDA (DAEN-2CE)-AOC [i]	(703) 697-0218
CHEMTREC (Information Only)	(800) 424-9300

NOTES:

[a] Agency notifications are only made by the BGAD Environmental Office.

[b] The fire department having jurisdiction must be notified. The BGAD (onsite) fire department is designated as the fire department with jurisdiction for the EDT Facility.

[c] Notify both the KDEP and Kentucky ERC of a release at or above the reportable quantity (RQ).

[d] The NRC notifies the U.S. Coast Guard and U.S. EPA (includes chemical surety and toxic gases).

[e] 911 should notify adjoining jurisdictions if they are at risk. Notify the following jurisdictions, if required:

- Clark County (859) 744-2111
- Estill County (606) 723-2201
- Fayette County (859) 258-3600
- Garrard County (859) 792-3023
- Jackson County (606) 287-8305
- Jessamine County (859) 887-5447
- Rockcastle County (606) 256-2195

[f] If a fire hazard exists, the State Fire Marshall must also be notified; therefore, when reporting to KDEP and Kentucky ERC, request the State Fire Marshall be notified of the fire hazard.

[g] Notify Motor Vehicle Enforcement if hazardous material was released on public roadway, or if motor vehicle enforcement assistance is needed.

[h] The NRC notifies U.S. EPA Region 4. The BGAD may also notify Region 4.

[i] Notify the U.S. Army Operations Center (AOC) in a crisis only.

NOTE: In Kentucky, the following specific RQs apply to petroleum products. Notify state and local agencies of a release at or above following RQs:

Diesel:	Federal	=	Any quantity that poses any threat to water
	KY RQ	=	75 gallons on land or water
All other petroleum products:	Federal	=	Any quantity that poses any threat to water
	KY RQ	=	25 gallons on land or water

This document contained Export Control/International Traffic in Arms Regulations Information.

Appendix G-1: General Emergency Response Procedural Guide

a. Procedures for Initially Controlling a Release of Hazardous Waste or Hazardous Waste Constituents – Not Involving Mustard

Emergency response begins with the notification of control room personnel of an emergency condition involving a release of hazardous waste or hazardous waste constituents into a secondary containment, the environment, or outside of engineering controls. The notification initiates the following emergency response activities:

(1) The EDT Facility Shift Plant Manager notifies the OC that an emergency exists, provides available information on the situation, and assumes responsibilities as the SDC Incident Commander.

(2) After making this notification, the EDT Facility Incident Commander directs the EDT Facility OSC and the EDT Facility HMRT Leader to gather information, and plan the emergency response to mitigate the source, and contain, cleanup, store, and dispose of released material and cleanup/decontamination residues.

(3) EDT Facility HMRT personnel, wearing appropriate PPE (the Safety Officer provides assistance in PPE selection) for the waste or waste constituents released, mobilize to the emergency response location and respond to the release of hazardous waste or hazardous waste constituents.

The first priority in the emergency response (i.e., assuming that no injured personnel or personnel otherwise unable to clear the area remain behind) is to stop the release.

If the emergency involves a leaking container, the leak will be stopped by transferring the waste into a new container that is in good condition and compatible with the material being transferred. If transfer is not immediately possible, the leak or spill is to be contained until waste can be placed into the appropriate container(s)/tank(s). Containment in the Service Magazine is adequate to ensure agent/hazardous waste does not reach the environment; however, vapor containment is needed and an emergency blower and filter unit are attached to the roof vent of the magazine. The use of this blower and filter will ensure the magazine is maintained at a negative pressure relative to the outside, which will prevent vapor migration outside of the magazine.

If a release from a container occurs outside of secondary containment, unprotected personnel are to be evacuated to an upwind location. Personnel wearing the appropriate PPE contain the spill and prevent further leakage at the source of the spill. Spilled process waste solutions are to be transferred to another tank, a portable tank, or into containers. Other liquid wastes, solid wastes, or contaminated media are to be transferred into containers or portable tanks. The containerized waste materials are stored temporarily prior to disposal.

If the emergency involves a fire or unplanned explosion, the initial response consists of removing any injured personnel. For significant fires or unplanned explosions, the EDT Facility HMRT Leader establishes a safe ~~-s~~tand-off" distance and monitors the situation while awaiting additional support from the BGAD Fire Department. No HMRT personnel are placed at risk.

If the emergency involves an air release of contaminants, the SDC OTS HVAC system mitigates the release and the EDT Facility personnel providing monitoring support perform monitoring of the release using in-place air monitoring systems (i.e., MINICAMS® and the Depot Area Air Monitoring System – DAAMS). If there is a confirmed environmental release of chemical agent into the atmosphere, then activation of the BGAD CAIRA Plan will be required.

This document contained Export Control/International Traffic in Arms Regulations Information.

In the event that wastes mix with water (e.g., firefighting water), the EDT Facility responders use sorbent materials and/or containment equipment and devices to control the contamination. EDT HMRT personnel place sorbent materials directly on the waste to prevent further spread and to aid in recovery and/or construct berms of earthen or sorbent materials downstream of the spill or release to contain larger waterborne spills.

b. Follow-on Actions for a Liquid Release:

After initial emergency response, follow-on actions include, but are not limited to:

(1) Use a portable pump or the installed sump pump to remove as much of the spilled/leaked waste as possible. Use squeegees, absorbents, and/or a wet-dry vacuum (with HEPA filter) to remove the remaining spilled/leaked waste, and any wastes in secondary containments, within 24 hours of detecting the leak.

(2) Collect the released chemical, spent decontamination solution, and any contaminated water for temporary storage prior to disposal. Place any contaminated sorbents, earthen materials, or other containment devices in DOT-approved containers, and store prior to characterization and disposal. Do not leave potentially contaminated materials at the spill site.

(3) Observe and/or monitor the emergency response area for the presence of contaminants.

(4) Decontaminate the release area (with appropriate decontamination solutions and/or water) until the level of remaining contamination is determined to be acceptable based on criteria established in conjunction with KDEP.

(5) If contamination remains, repeat the decontamination procedure until cleanup is satisfactory.

The Incident Commander notifies the EDT environmental compliance personnel if hazardous waste removal within 24 hours of detection is not possible for paragraph (1) above. If the EDT Facility Incident Commander determines the release affects or may affect the environment beyond the EDT Facility boundary, he/she notifies the OC.

c. Procedures for Control of Incidental Releases

An incidental release is a release of hazardous materials, hazardous waste or hazardous waste constituents, where the substance can be absorbed, can be neutralized, or can otherwise be controlled by EDT Facility personnel in the immediate release area, at the time of the release.

In the event of an incidental release of hazardous waste or hazardous constituents at the EDT Facility:

(1) The Incident Commander directs the EDT HMRT to mitigate the source, and to contain, cleanup, and temporarily store the wastes.

(2) As soon as practicable, the EDT Facility Incident Commander notifies the EDT Facility Deputy Plant Manager of the incidental release and the actions taken to mitigate the release.

(3) EDT HMRT personnel place spilled liquid, solid waste, and contaminated residuals into containers and temporarily store the wastes prior to disposal.

(4) EDT HMRT personnel place contaminated sorbents, earthen materials, or other containment devices in DOT-approved containers, and store the wastes prior to disposal or treatment. EDT Facility personnel remove other contaminated materials from the spill site and decontaminate the materials for reuse or dispose as wastes.

This document contained Export Control/International Traffic in Arms Regulations Information.

Part H: Personnel Training [401 KAR 34:020 Section 7 and 40 CFR 264.16]

The BPBG Team's Training Program provides EDT Facility personnel with the necessary knowledge and skills to perform hazardous waste duties safely, efficiently, and in an environmentally sound manner. The purpose of this training program is to prepare EDT Facility personnel for treatment operations, with emphasis on reducing potential risks that may threaten human health or the environment. This is accomplished by ensuring EDT Facility personnel handling hazardous waste can properly perform their assigned duties and responsibilities. In addition to providing training in the mechanics of the job functions, this training program provides EDT Facility personnel with a thorough understanding of the treatment operations, including the safety and emergency response operations. Refresher training will be conducted as required by environmental regulations or to update workers on new methods or equipment.

This training program meets the RCRA regulatory requirements by:

1. Providing specific training for various hazardous waste management positions
2. Ensuring all personnel involved in ammunition operations and planning complete the training program prior to being assigned to duties involving ammunitions or explosives
3. Providing training that ensures EDT Facility personnel are able to respond effectively to emergencies
4. Ensuring the BPBG Team's Training Program is directed by qualified persons trained in hazardous waste management practices
5. Maintaining required documentation for the EDT Facility
6. Maintaining training records for EDT Facility personnel for at least three years from the date last worked

H-1: Outline of Training Program [401 KAR 34:020 Section 7 and 40 CFR 264.16]

The BPBG Team‘s Training Program for the EDT Facility has been designed to ensure EDT Facility personnel will be able to perform their specific job assignments. The training program consists of both onsite training and additional courses that apply to specific job functions. This Training Plan is organized as follows:

a. Section H-1b provides information on the job titles and job descriptions for EDT Facility personnel involved in hazardous waste operations and the maintenance of these documents by the EDT Facility and BPBG Training Department
b. Section H-1c describes the training content, frequency, and techniques
c. Section H-1d describes the responsibilities of the appropriate manager, who coordinates and manages the training of the EDT Facility personnel
d. Section H-1e describes the relevance of the training to the job positions
e. Section H-1f describes training for emergency response
f. Section H-2 describes the implementation of the training program
g. Appendix H-1 lists the curriculum associated with the BPBG Team‘s Training Program

This document contained Export Control/International Traffic in Arms Regulations Information.

H-1b: Job Titles and Duties [401 KAR 34:020 Section 7 and 40 CFR 264.16(d)(1)-(2)]

Complete job descriptions, including title, office, person reporting to, duties, and minimum qualifications/training for each EDT Facility position related to hazardous waste management shall be maintained at the EDT Facility. Job titles and duties will be consistent with the current duties and responsibilities for safely treating explosive components in accordance with applicable OSHA, RCRA and military requirements. In general, all personnel working at the EDT Facility will be required to:

(1) Demonstrate the ability to understand and apply both oral and written instructions at a level appropriate to the assigned job.

(2) Possess the aptitude and attitude necessary to ensure compliance with environmental, safety, and job requirements.

(3) Be physically capable of doing the work.

H-1c: Training Content, Frequency and Techniques [401 KAR 34:020 Section 7 and 40 CFR 264.16(d)(3)-(4)]

The BPBG Team's Training Program provides both initial and continuing training of all supervisors, operators, and personnel involved in the waste management unit operations. The principal objectives of the training program are to train personnel to safely operate, maintain, and monitor EDT Facility operation without adversely impacting the environment. The training program includes job orientation, safety procedures, and basic work principles.

(1) Training Content: Plant-Specific Training

EDT Facility personnel training requirements vary from position to position, with each position requiring a unique training path. To facilitate the development and scheduling of these training paths, the training program, in general, is divided into four basic steps and refresher training.

Step 1: Initial Training

The Initial Training Program includes indoctrination and familiarization training designed to ensure EDT Facility personnel fulfill their basic training requirements; it is conducted at the BPBG Training Facility. Introductory safety training topics, and other training required by the individuals' assigned positions and the needs of the EDT Facility also may be provided.

Step 2: System Training

System training is conducted at the BPBG Training Facility. This training will include the EDT Plant Systems Description (EDT-PSD) course and specific EDT Facility systems courses and seminars.

Step 3: Advanced Training

The focus of this step is to provide job/task/equipment specific EDT Facility training.

This document contained Export Control/International Traffic in Arms Regulations Information.

Step 4: Emergency Response Training

The curriculum for Emergency Response Training has been designed to ensure EDT Facility personnel receive the appropriate level of response training based on job and regulatory requirements. The Training Department, in conjunction with EDT Facility Emergency Response personnel, will ensure the training program meets the requirements of BPBG Team and the regulatory requirements set forth by the Occupational Safety and Health Administration (OSHA).

(2) Refresher Training

Some refresher training is driven by regulatory requirements. For other refresher training, engineering change proposals, permit modifications, revisions to technical documentation, facility baseline changes, regulatory changes, and Student/Instructor Course Evaluations will be reviewed to determine the necessity for changes to training materials. If there is a significant training impact associated with the reviews/changes and technical information such as operating parameters or the sequence of operations is affected, training materials will be revised as quickly as possible to reflect the latest information.

In some cases, information related to EDT Facility personnel safety, equipment safety, a threat to the environment, or conduct of facility operations may require a more immediate resolution. In these cases, the response must be immediate and may require either written or verbal communications to invoke an immediate change, followed by a formal revision to training materials. In these cases, a "pen and ink" correction of materials is acceptable until formal approval is granted through the normal review process.

In some cases, the information received will not require a change to a Training Program, but will require the information to be disseminated to EDT Facility personnel to reinforce certain aspects of their job responsibilities.

(a) Immediate Communication of Information – Information related to safety of the public or EDT Facility personnel, the environment, or conduct of EDT Facility operations. This type of change/information must be disseminated to EDT Facility personnel prior to the next assumption of job responsibilities. Changes requiring immediate training can be presented to the workforce during pre-shift briefs, supervisors meetings, and safety/tailgate meetings.

(b) Routine – Information that is editorial in nature, emphasizes an aspect of operations previously presented in the Training Program, or is administrative in nature. This training can be accomplished through the required reading program, during refresher training or through administrative notifications as appropriate for the specific situation.

(3) Training Content: Regulatory Training

(a) OSHA and HAZWOPER

At a minimum, all EDT Facility personnel involved in hazardous waste management operations have or will have received training in the following areas:

(i) Hazard Communications (HAZCOM)

(ii) Hazardous Waste Operations and Emergency Response (HAZWOPER)/Occupational Safety and Health Administration (OSHA) 1910.120

This document contained Export Control/International Traffic in Arms Regulations Information.

(iii) Training for EDT Facility personnel includes 40 hours, consisting of classroom and hands-on experience, in the use of PPE, implementation of the emergency response plan, safe operating practices, identification of potential hazards or hazardous situations, etc., in accordance with the OSHA standards.

(iv) Annual refresher training of eight (8) hours, in addition to the 40-hour HAZWOPER training

(b) RCRA Compliance

EDT Facility personnel are qualified to meet the minimum requirements outlined in OSHA standard 29 CFR 1910.120 covering HAZWOPER training for operations conducted under RCRA. Qualification records for EDT Facility personnel are maintained by the BPBG Team.

(c) HAZMAT

DOT training is required for any employee involved in the receiving, shipping, storing, or managing hazardous materials (HAZMAT, which by DOT definition also includes hazardous waste).

(4) Training Content: EDT Facility Unique and Specific Hazards

Any new personnel that will be involved with the handling of chemical ammunition are required to meet certain training requirements prior to their being assigned duties associated with the EDT Facility. The performance-based training program used by the BPBG Team consists of two major phases: classroom training and on-the-job training (OJT). EDT Facility personnel must receive a grade of at least 80 percent on all classroom phase written examination prior to starting OJT. The content of the classroom curriculum is based on sound instruction practices using the instructional systems design (ISD) process. All courseware is approved by subject matter experts (SMEs) and department managers.

The OJT Phase consists of hands-on training using approved procedures, while under the direct supervision and control of an incumbent operator. Approved procedures are based on equipment configuration, sound operating practices, and a task-specific job hazard analysis.

EDT Facility personnel operating and/or maintaining monitoring equipment are required as a laboratory employee to complete the certification training required by the Laboratory Director, but if working inside the EDT Facility or working with RCRA waste, will also be required to complete the RCRA compliance training.

EDT Facility personnel involved in hazardous waste management activities must successfully complete an annual review of their initial hazardous waste management training.

Training may include classroom instruction, OJT, hands on/practical exercises (e.g., donning/doffing PPE), or a combination of these delivery methods.

H-1d: Training Manager [401 KAR 34:020 Section 7 and 40 CFR 264.16(a)(2)]

The BPBG Training Manager is responsible for the training of the EDT Facility personnel. The responsibilities of the Training Manager are to:

(1) Coordinate training of the EDT Facility personnel in the proper operation of the facility in accordance with Federal, state, Army, and installation regulations.

(2) Coordinate continuing training, as necessary, to inform personnel of new procedures, provide refresher training, and provide training for new personnel.

This document contained Export Control/International Traffic in Arms Regulations Information.

(3)Ensure training records are maintained in accordance with 40 CFR 264.16(d) and 40 CFR 264.16(e).

(4)Ensure the EDT Facility personnel are trained in hazardous waste management and Contingency Plan implementation, including emergency procedures, and ensure personnel receive training appropriate to their positions.

H-1e: Relevance of Training to Job Position [401 KAR 34:020, Section 7 and 40 CFR 264.16(a)(2)]

EDT Facility personnel performing tasks involving hazardous waste management receive training based on an analysis of their job tasks. The Training Department establishes learning objectives for these tasks. This training also will be based on the hazardous waste management procedures relevant to the tasks and the position in which they are employed.

H-1f: Training for Emergency Response [401 KAR 34:020 Section 7 and 40 CFR 264.16(a)(3)-(4)& 40 CFR 264.16(c)]

Emergency response training is designed and structured to ensure all EDT Facility personnel are trained to respond properly to emergency situations, as outlined in Part G of this Permit Modification, which is based on the BGAD Integrated Contingency Plan, and to maintain compliance, during emergencies, with applicable permit requirements and environmental regulations.

This training addresses non-routine situations that could lead to an emergency involving hazardous wastes, if proper responses are not implemented, such as:

(1)Procedures for using, inspecting, repairing, and replacing the EDT Facility emergency and monitoring equipment

(2)Communication and alarm systems

(3)Implementation of the Contingency Plan and appropriate emergency notifications

(4)Shutdown of operations and evacuation

(5)Response to fires, unplanned explosions, or environmental releases

(6)Additional topics covered during emergency response training include:

(a) The chemical characteristics of the wastes personnel will be assigned to manage, that is, reactivity, toxicity characteristics, and presence of chemical agent

(b) Knowledge of what to do in the event of a spill or leak

(c) The types of protective equipment, including encapsulating suits, respirators, and other protective clothing to be worn

Introductory training and annual refresher sessions will be provided to BGCAPP personnel receiving emergency response training. Appendix H-1: Curriculum contains additional details concerning emergency response training.

This document contained Export Control/International Traffic in Arms Regulations Information.

H-2: Implementation of Training Program [401 KAR 34:020 Section 7 and 40 CFR 264.16(b)&(e)]

All personnel are trained prior to beginning work at the EDT Facility. All the EDT Facility personnel are required to complete the training program specific to his/her job assignment and will not work unsupervised until training has been successfully completed. Training records for the EDT Facility personnel (to include records for trainers) are maintained onsite, and will include, at a minimum:

a. Job title for each position related to hazardous waste management operation and activities, and the name of each employee filling the position
b. Job descriptions specifying duties for each position, minimum qualifications required to fill the position, and required training for the position
c. Description of the type and amount of introductory and continuing training that will be given to each employee
d. Date each employee started working at the EDT Facility
e. Course enrollment, attendance, and successful completion information recorded for each course attended

All training records and documentation on current EDT Facility personnel are kept until closure of the building. Training records on former EDT Facility personnel will be kept for at least three years from the date last worked.

This document contained Export Control/International Traffic in Arms Regulations Information.

Appendix H-1: **Curriculum**

The topics covered in each Training step are listed in this appendix. Additional details for the following topics are provided near the end of the appendix:

a. HAZWOPER Initial Training 29 CFR 1910.120 (40 Hours)
b. HAZWOPER Refresher 29 CFR 1910.120 (8 Hours)
c. HAZWOPER Supervisor/Management 29 CFR 1910.120 (8 hours)
d. First Responder Awareness Level 29 CFR 1910.120(q)(6)(i) (required hours for initial or refresher training not specified)
e. First Responder Operations Level 29 CFR 1910.120(q)(6)(ii) (8 hours)
f. Technician Level 29 CFR 1910.120(q)(6)(iii) (24 hours)
g. Department of Transportation (DOT) Requirements - Hazardous Material Employee 49 CFR 172.704
h. Resource Conservation and Recovery Act (RCRA) 40 CFR 264.16

a. Facility-Specific Training

Step 1: Initial Training

Depending on the EDT Facility employee‘s specific duties, he/she will be required to attend training that addresses the following topics:

(1) Management commitment
(2) Incident investigation
(3) Safe behavior overview
(4) Injury/illness reporting
(5) General project/facility rules
(6) Safety task analysis risk reduction talk (or "STARRT")/activity hazards analysis (or "AHA")
(7) Emergency procedures (including spill response)
(8) Lock-out and tag-out
(9) PPE
(10) Confined spaces
(11) Safe access to elevated work areas
(12) Hazard communication
(13) Quality & environmental awareness
(14) Compressed gas cylinders
(15) Housekeeping
(16) Back injury prevention
(17) Fire prevention and protection
(18) Workers' compensation
(19) Safety, toolbox meetings
(20) Excavations and trenching
(21) Fall protection/prevention

This document contained Export Control/International Traffic in Arms Regulations Information.

(22) Industrial relations
(23) Barricades
(24) Hand power tool safety

Step 2: Systems Training

Depending on the EDT Facility employee's specific duties, he/she will be required to attend training that addresses the design, construction, operation, safety, and limitations of the technology.

Step 3: Advanced Training

Depending on the EDT Facility employee's specific duties, he/she will be required to attend training that addresses the maintenance of the technology. Advanced training also addresses topics such as:

(1) Toxic Area Training – No demilitarization protective ensemble (DPE)
(2) Toxic Area Training – All
(3) Toxic Area Entry
(4) DPE Support Area

Step 4: Emergency Response Training

Depending on the EDT Facility employee's specific duties, he/she will be required to attend training that addresses the following topics:

(1) Advanced Emergency Response (ERP)
(2) Decontamination Team Training
(3) HAZMAT Team Training (HAZWOPER)
(4) Incident Commander
(5) Control Room Support Emergency Response
(6) High Angle Rescue
(7) RCRA
(8) DOT

Step 5: Refresher Training

Depending on an employee's specific duties, he/she will be required to attend training (i.e., required by environmental regulations) that addresses the following topics:

(1) Annual HAZWOPER TSDF Workers and Supervisors (8 hour)
(2) Annual RCRA Refresher
(3) Annual Emergency Response (provided throughout the year to ensure competency is maintained)
(4) Recurrent DOT HAZMAT Transport Training (every three years – 49 CFR Part 172, Subpart H)
(5) Emergency Responders to include all emergency response levels: Awareness, Operations, Technician, Specialist and Incident Commander (training sufficient to demonstrate and maintain competency)

This document contained Export Control/International Traffic in Arms Regulations Information.

b. Hazardous Waste Operations and Emergency Response (HAZWOPER)

(1) HAZWOPER Initial Training 29 CFR 1910.120 (40 Hours)

The purpose of this course is to ensure awareness and promote safety among EDT Facility employees potentially exposed to chemical hazards in the work-site. The objective is to ensure employees operate in the safest possible manner in situations where contact with potentially hazardous materials is likely. The training objectives include: control or eliminate the potential hazards and/or losses and protect the health and safety of workers, the public, and the environment. This course provides employees:

(a) An understanding of hazardous materials/wastes handling, identification, and human responses to exposure to include first aid for common industrial chemical exposures and toxic aid for exposures to mustard agent
(b) The importance of the Health and Safety Plan (or "HSP")
(c) Knowledge of what to do in case of site emergencies (i.e., Site Emergency Response or Contingency Plan)
(d) Appropriate safety methods and work practice controls
(e) Ability to recognize signs and labels that are used to alert personnel to danger involving hazardous material/waste
(f) Methods for preventing releases to the environment
(g) A description of site/stack air monitoring
(h) An understanding of site control methods for confinement, management, and cleanup to protect the public and the environment

(2) HAZWOPER Refresher 29 CFR 1910.120 (8 Hours) –

This course is designed for general site personnel who remove hazardous waste or who are exposed/potentially exposed to hazardous substances or health hazards. Employees must have completed the 40-hour training course prior to taking the refresher course. Topics covered include:

(a) HAZWOPER regulations
(b) Safety and health plans
(c) Hazardous chemicals
(d) Safety hazards
(e) Air monitoring
(f) Medical surveillance
(g) Site control
(h) Decontamination
(i) PPE including respiratory equipment

(3) HAZWOPER Supervisor/Management 29 CFR 1910.120 (8 hours) –

The supervisor and management training requirement applies to all onsite managers and supervisors directly responsible for, or who supervise, employees performing hazardous waste operations at the EDT Facility. Supervisor/management personnel must have completed at least 40 hours of hazardous waste training prior to receiving the supervisor/management training.

This document contained Export Control/International Traffic in Arms Regulations Information.

(4) Emergency Response Training

(a) First Responder Awareness Level 29 CFR 1910.120(q)(6)(i) – (Training Requirement Not Specified in Hours)

The First Responder Awareness Level training applies to all BPBG employees and EDT Facility personnel and is required for access to the site and the EDT Facility. This training provides employees with the knowledge and information needed if they observe or discover spilled/released hazardous substance (i.e., evacuate the area and notify appropriate personnel). First responders at the Awareness Level shall receive annual refresher training of sufficient content and duration to maintain their competencies, or shall demonstrate competency in those areas at least annually.

(b) First Responder Operations Level 29 CFR 1910.120(q)(6)(ii) (8 hours) –

The First Responder Operations Level training applies to EDT Facility personnel designated to provide the initial response to spilled/released hazardous substance in the protection of near-by persons, property, or the environment. First responders at the operations level shall receive annual refresher training of sufficient content and duration to maintain their competencies, or shall demonstrate competency in those areas at least annually.

(c) Technician Level 29 CFR 1910.120(q)(6)(iii) (24 hours) –

The Technician Level training applies to those individuals designated to respond to spilled/released hazardous substances to stop the spill/release. These employees are trained in accordance with paragraph (q)(6) of 29 CFR 1910.120 and receive annual refresher training of sufficient content and duration to maintain their competencies, or shall demonstrate competency in those areas at least annually.

NOTE: Emergency Response Training requirements for these three levels (i.e., first responder awareness, first responder operations, and technician levels) include annual refresher training. Much of emergency response training involves hands-on exercises, which are training events that are used to demonstrate competency of the BGCAPP emergency responders. This training will be organized, conducted, critiqued, and documented by personnel from the BGCAPP Training Department. Exercises not completed satisfactorily as determined by the Training Department will be repeated.

c. Department of Transportation (DOT) Requirements - Hazardous Material Employee 49 CFR 172.704

DOT training is required for any employee involved in the receiving, shipping, storing, or managing of hazardous materials (HAZMAT, which by DOT definition also includes hazardous waste). Employees involved in these HAZMAT activities include any person who directly affects HAZMAT transportation safety, including a person who:

(1) Loads, unloads, or handles HAZMAT
(2) Prepares HAZMAT for transportation
(3) Is responsible for safely transporting HAZMAT
(4) Operates a vehicle used to transport HAZMAT

d. Resource Conservation and Recovery Act (RCRA) 40 CFR 264.16

Any personnel involved in managing hazardous wastes or assigned to the Environmental Department receive training addressing:

(1) Job duties
(2) Hazardous waste management procedures

This document contained Export Control/International Traffic in Arms Regulations Information.

(3) Contingency Plan implementation

(4) Effective response to emergencies

(5) Emergency procedures, equipment, and systems

EDT Facility employees cannot work unsupervised until they have successfully completed this RCRA training course. These employees are also required to take part in an annual RCRA training refresher.

This document contained Export Control/International Traffic in Arms Regulations Information.

Part I: Closure Plan, Post Closure Plans and Financial Requirements [401 KAR 34:070 Sections 2–6; 34:080 Section 2(3); 34:180 Section 9; 34:190 Section 8; 34:250 Section 2; & 40 CFR 264.111–115, 264.178, and 264.601]

I-1: Closure Plan

The EDT Facility includes permitted hazardous waste management units (HWMUs) providing container storage and miscellaneous (Subpart X) unit treatment. Following elimination of the mustard (H) chemical weapons stockpile by treatment of the H-filled projectiles, over-packs, and DOT bottles in the Subpart X EDT Facility, all remaining wastes will be shipped offsite. The EDT Facility personnel cannot formally identify the EDT Facility end state until nearer the end of agent destruction operations. Therefore, the plan for closure and turn-over of the EDT Facility is preliminary and cannot be finalized until later (i.e., after the Army and the Commonwealth of Kentucky agree on the final end state for the EDT Facility).

Currently, the preliminary EDT Facility closure includes decontamination of the equipment in the EDT Facility. The SDC and OTS equipment will be left in standby or turned-over to BGAD. The remaining facility will undergo decontamination as a means of closure under the provisions of this written plan and allow the equipment and facility to be placed into standby or transferred to another operator under the BGAD Hazardous Waste Management Permit. The objective of this type of closure is to remove RCRA hazardous wastes and constituents from a HWMU to eliminate the possibility of future releases in a manner protective of human health and the environment. The EDT Facility will achieve closure after all wastes have been shipped offsite for disposal and the facility has undergone a thorough decontamination confirmed by monitoring, sampling, and analysis activities. This preliminary closure approach does not include any disposal or demolition of EDT equipment or structures. However, some portions of the equipment (e.g., pre-filters, HEPA filters, and carbon) will be removed, disposed, and replaced.

I-1a: Closure Performance Standards [401 KAR 34:070, Section 2 and 34:250 Section 2, & 40 CFR 264.178, 264.111 and 264.601]

The performance standards (40 CFR 264.111, Closure performance standard and 40 CFR 264.601) for closure of the EDT Facility require the following:

(1) Minimize need for further maintenance or post-closure care.

(2) Control, minimize, or eliminate escape of hazardous waste or its constituents from the closed facility to the extent necessary to protect human health and the environment.

(3) Comply with the closure provisions of Commonwealth of Kentucky environmental regulations (which incorporate by reference Federal requirements). Specifics for EDT Facility compliance with the performance standard for HWMUs are as follows:

This document contained Export Control/International Traffic in Arms Regulations Information.

(a) The basis for ~~c~~lean closure" of HWMUs that have not stored or treated ~~li~~quid" agent is meeting the KDEP agreed upon risk screening levels or the cleanup levels for the waste constituent(s) of concern. The final rinse or wipe samples of surfaces within the Subpart X/SDC unit must be less than agreed upon levels for waste constituents of concern in final rinse samples or wipe samples.

(b) The term ~~li~~quid" chemical agent is used in this section to indicate the storage, treatment, or other management of chemical agent and is used to differentiate from other wastes that may be agent-derived but which contain agent concentrations after treatment or decontamination.

The basis for ~~c~~lean closure" of HWMUs that have stored or treated ~~li~~quid" chemical agent is decontamination. The three HWMUs of concern in the EDT Facility would include the Service Magazine and secondary containment, and the SDC chamber, plenum and ductwork prior to the thermal oxidizer. Wastes (from these areas) will be characterized as ~~h~~azardous" or ~~n~~ot hazardous" for offsite shipment and shipped in accordance with the respective regulations to appropriately permitted facilities including commercial TSDFs if treatment or disposal as a hazardous waste is necessary.

The EDT Facility will authorize treatment and/or disposal of closure wastes from waste storage areas and the treatment unit only in a facility approved to accept these wastes.

I-1b: Closure Activities [401 KAR 34:070 Sections 2 and 4–6; 34:180 Section 9; 34:190, Section 8; 34:250, Section 2; & 40 CFR 264.111 and 264.113–264.115; 264.178; and 264.601]

The Army adopted the risk-based worker and community AELs and Acute Exposure Guideline Levels (AEGLs) for agents (Department of Army Pamphlet 385-61, *Toxic Chemical Agent Safety Standards*). AELs are concentrations for specific exposure durations that reflect health-based risks for chemical agent exposures to humans via inhalation. AEGLs are concentrations used to assess the health-based risks associated with acute exposures during emergencies.

The EDT Facility will use monitoring of airborne concentrations of chemical agents to determine the appropriate level of PPE for personnel conducting EDT Facility closure and to ensure the general population is not at risk due to airborne agent concentrations. A comparison of the expected agent concentrations to the STEL and WPL will be used in making these determinations.

(1) **Closure of EDT Facility Permitted HWMUs with History of Possible "Liquid" Agent Contamination** – The closure objective for the EDT Facility is the decontamination of areas potentially exposed to agent contamination (e.g., Service Magazine/secondary containment; and ductwork, plenums, and SDC chamber) and other non-agent waste constituents.

(a) For the Service Magazine, achieving ~~c~~lean closure" will be demonstrated when containment rinse samples are analyzed and do not contain waste constituents above the agreed upon risk or cleanup levels; and when wipe samples for the SDC chamber are non-detect for mustard agent and below risk levels for other waste constituents of concern (e.g., metals).

This document contained Export Control/International Traffic in Arms Regulations Information.

(b) The SDC process provides destructive treatment, but BPBG Team will collect wipe samples from inside the chamber and analyze the samples for the presence of organic hazardous wastes to include mustard agent. In addition, the chamber will be decontaminated and wipe sampling/analysis for inorganic hazardous wastes (e.g., metals) will be performed.

Following achievement of this objective, this preliminary closure approach assumes the EDT Facility will be placed into standby or turned-over to the permit owner (i.e., BGAD). To achieve this objective, the EDT Facility will be decontaminated using appropriate and effective decontamination solutions and subsequently monitored using MINICAMS® and DAAMS monitoring and/or wipe and rinse sample analyses, as appropriate. The EDT Facility operations and lab personnel will characterize the waste materials resulting from the decontamination and ship any wastes, determined to be hazardous, offsite for treatment and/or disposal in an appropriately permitted, commercial TSDF.

(2) **Closure of EDT Facility Permitted HWMUs with Potential for Non-Agent Contamination** – In these HWMUs, the SDC will decontaminate and/or clean the surfaces/equipment, monitor and close in-place. EDT Facility personnel will use pressure washing with containment of wash and rinse liquids as the decontamination method. The EDT Facility will demonstrate clean closure of HWMUs by collecting final rinse samples (i.e., for surfaces) and wipe samples (i.e., from equipment). Basis for analyses performed are the inventories of wastes stored or wastes processed in a given area, and the analyses will take into account the nature of the treatment and spill or release history. The waste storage and treatment areas that BPBG Team will sample and analyze for waste constituent contamination include:

(a) General areas within the EEB

(b) Other areas of possible contamination identified as a result of environmental releases during EDT Facility operations; and

(c) Equipment in the OTS from the thermal oxidizer to the stack

I-1b(1): Partial Closure Activities [401 KAR 34:070 Section 3, & 40 CFR 264.112]

The EDT Facility personnel will conduct closure activities for the purpose of placing into standby or turning-over the EDT Facility. If partial closures are needed, the BPBG Team will revise the Hazardous Waste Management Permit and this closure plan in accordance with 401 KAR 34:070, Section 3 and 40 CFR 264.112.

I-1b(2): Final Closure Activities [401 KAR 34:040 Section 7, & 40 CFR 264.112(b)(4)]

As described above, the BPBG Team will base the clean closure of permitted units on decontamination, disassembly, and removal. The RCRA closure includes decontamination of the Service Magazine and the SDC and associated equipment; and the closure of these permitted systems using decontamination, wipe and rinse samples, and closure in-place if monitoring and sampling confirms areas/systems can be ~~c~~lean closed." The SDC HVAC and the EEB HVAC carbon banks and filters will be removed and the filter housing and associated ductwork will be decontaminated as a last step in the closure of the EDT Facility.

This document contained Export Control/International Traffic in Arms Regulations Information.

Sequence of Closure Activities for Permitted HWMUs with a History of Possible "Liquid" Agent Contamination (i.e., Service Magazine, and DC)

RCRA decontamination of the Service Magazine including the secondary containment and trenches, will include the following activities:

(a) Waste removal from the containment area, and disposal of waste at an approved TSDF
(b) Visual inspection of containment systems
(c) Dry mechanical cleaning of floors and walls (by scraping, vacuuming, and/or sweeping)
(d) Repair of cracks, gaps, or damage to containment, of unsealed areas, and of damage to the liner prior to beginning use of liquids for cleaning
(e) Low-volume pressure washing/rinsing (with possible use of non-ionic surfactant detergent, if required)
    (1) Two subsequent low-pressure ambient-temperature water rinses
    (2) Sampling and analysis of final rinse to confirm effectiveness of decontamination
    (3) If decontamination is not effective, perform low-volume pressure washing again and repeat wash/rinse cycle
    (4) Repeat sampling and analysis of final rinse to determine whether decontamination was effective
    (5) If decontamination is still not effective after the second wash/rinse cycle, EDT Facility personnel will develop alternate decontamination methods and inform KDEP of the revised approach.

The EDT Facility will detonate or deflagrate munitions and treat the chemical fill and the SDC equipment may, therefore, be exposed to liquid agent - H. Closure activities for the SDC equipment (e.g., DC, loading chambers, conveyor system, OTS, ductwork, plenum, and filters) will include:

(a) Areas/equipment will be cleaned using dry vacuum or other means of removing debris/dust
(b) The DC will be decontaminated by heating and some equipment (e.g., ductwork, filter elements, and carbon) will be disposed and replaced
(c) Decontamination will be repeated until wipe sample analyses indicate agent concentrations are below closure criteria

Sequence of Closure Activities for Areas without a History of Potential "Liquid" Agent Contamination

Other areas within the EDT Facility will undergo cleaning and decontamination consistent with the history of the area. For example, both the Support Building and Control Room are expected to be free of contamination and will be simply cleaned as part of EDT Facility closure. Areas that have no history of agent contamination but may have been used as a <90-day storage area (e.g., inside the EEB) would be cleaned as follows:

(a) Waste removal from the containment area, and disposal of waste at an approved TSDF
(b) Visual inspection of area

This document contained Export Control/International Traffic in Arms Regulations Information.

(c) Dry mechanical cleaning of floors and walls (by scraping, vacuuming, and/or sweeping)

(d) Repair of cracks, gaps, or damage prior to beginning use of liquids for cleaning (Note: If containment pallets have been used for storage of liquid-filled containers, the containment pallets may be disposed in lieu of triple rinsing.)

(e) Low-volume pressure washing/rinsing (with possible use of non-ionic surfactant detergent, if required)

(f) Two subsequent low-pressure ambient-temperature water rinses

(g) Sampling and analysis of final rinse (based upon waste constituents of wastes stored in the area) to confirm effectiveness of decontamination

(h) If decontamination is not effective, return to low-volume pressure washing step above and repeat wash/rinse cycle

(i) Repeat sampling and analysis of final rinse to determine whether decontamination was effective

(j) If decontamination is still not effective after the second waste/rinse cycle, EDT Facility personnel will develop alternate decontamination methods and inform KDEP of the revised approach.

I-1c: Maximum Waste Inventory [401 KAR 34:070 Section 3, and 40 CFR 264.112(b)(3)]

Long-term waste storage at the EDT Facility is not planned nor permitted for any wastes except for munitions brought to the facility for treatment. The maximum amount of mustard agent stored in the EDT Service Magazine at closure should be zero with destruction of the mustard stockpile completed prior to closure. In terms of other wastes remaining at closure, wastes generated during treatment will be removed and disposed within 90-days of generation because long-term storage of these wastes is not being permitted for the EDT Facility. Thus, it is conservatively estimated that the maximum waste inventory that could be generated and stored at the EDT Facility would be limited to no more than one-half of the wastes generated at the facility within the planned nine months of SDC operation. Table I-1 reflects this maximum waste inventory. If the Hazardous Waste Management Permit for the EDT Facility is modified in the future to allow longer-term storage of hazardous wastes (i.e., other than chemical-filled munitions currently being requested for permitted storage), this table will also be changed to reflect a larger maximum waste inventory.

I-1d: Schedule for Closure [401 KAR 34:040 Section 3, & 40 CFR 264.112(b)(5)]

Figure I-1 contains information about the preliminary schedule for the EDT Facility closure. The closure of the EDT Facility is expected to tentatively begin late in calendar year 2017 or in the first quarter of calendar year 2018. EDT Facility personnel will update this preliminary closure schedule information and will notify KDEP of the initiation of closure (at least 45 days prior to initiating closure activities).

This document contained Export Control/International Traffic in Arms Regulations Information.

I-1d(1): Time Allowed for Closure [401 KAR 34:070 Section 4, & 40 CFR 264.113 except for 264.113(e)(7)(v)]

The preliminary schedule includes transport of all EDT Facility wastes offsite for treatment and/or disposal within 90 days following receipt of the last chemical-filled projectile for treatment; and completion of closure activities within 180 days following receipt of the last chemical-filled projectile.

I-1d(1)(a): Extensions for Closure Time [401 KAR 34:070 Section 4(2), & 40 CFR 264.113]

If required, any request for an extension to the closure period beyond the 180 days allowed by 40 CFR 264.113 will be made in accordance with the requirements of 401 KAR 34:070, Section 4(2) and 40 CFR 264.113.

I-1e: Inventory Disposal, Removal or Decontamination of Equipment [401 KAR 34:070 Section 4(2), & 40 CFR 264.113]

(1) **List of Equipment and Structures:** The EDT Facility personnel will not have a final EDT Facility end state until nearer the end of agent destruction operations. Therefore, the plan for closure of the EDT Facility is preliminary. Currently, the preliminary approach assumed for EDT Facility closure includes decontamination of the equipment from the EDT Facility and leaving the SDC process equipment in standby or turn-over to BGAD. This approach includes limited disposal of SDC equipment or structures (e.g., ductwork, filters, and carbon).

(2) **Criteria for Determining Contamination:** The current preliminary approach assumed for closure of SDC hazardous waste management systems and areas includes wipe and rinse sampling for facilities and structures with a history of ~~li~~quid" agent contamination. Decontamination continues until cleanup criteria are met and confirmed via closure sampling and analysis. Table I-2 contains the criteria and methods for confirming whether contamination remains in the Service Magazine and SDC/Subpart X unit.

(3) **Description of Decontamination Procedures Including Cleanup Materials, Equipment, and Residues:** The procedures used to decontaminate the areas and equipment with or without a history of ~~li~~quid" agent contamination will be similar. Following waste removal, decontamination methods include washing (i.e., low- and high-pressure washing) and/or steam treatment. Other decontamination methods (e.g., heated air wash, bleach, hydrogen peroxide, surfactants) may be used. However, it is anticipated that most of the decontamination will involve water, and decontamination equipment includes steam generators and pressure cleaners that will produce potentially contaminated water. Liquid cleaning and decontamination waste will use, therefore, predominately water that will require offsite treatment and/or disposal. These activities also generate secondary wastes (e.g., used PPE, wipes, and other trash/waste), and these wastes may be contaminated with waste constituents and/or be agent-derived.

(4) **Disposal Procedures for Soil, Rinse Water, etc.:** Any agent contaminated secondary closure wastes will be sampled, characterized, and shipped to an appropriately permitted, commercial TSDF. Both hazardous wastes that are agent-derived and other wastes characterized as hazardous wastes due to the presence of other constituents will be shipped offsite for final treatment/disposal.

(5) **Proposed Procedures/Means to Demonstrate Effectiveness of Decontamination:** The BPBG Team will use analytical results from rinse and wipe sampling of surfaces exposed to contamination to confirm the completion of decontamination for HWMUs.

This document contained Export Control/International Traffic in Arms Regulations Information.

I-1e(1): Closure of Containers [401 KAR 34:180 Section 9, & 40 CFR 264.178]

The BPBG Team will perform the closure of the permitted container storage area (i.e., Service Magazine) in accordance with 40 CFR 264.178, to include:

a. Removing wastes and containers from the permitted storage area
b. Dry vacuuming (i.e., using a vacuum with a HEPA filter) to remove the debris and dust from the secondary containment
c. Cleaning and/or decontamination of the secondary containment using cleaning and decontamination aids as appropriate
d. Triple rinsing of the secondary containment
e. Analysis of final rinse samples from other areas within the secondary containment of the permitted Service Magazine
f. Continuing cleaning, decontaminating and monitoring/sample analysis until closure criteria are achieved

I-1e(2): Closure of Tanks [401 KAR 34:190 Section 8, & 40 CFR 264.197]

Not applicable. The EDT Facility does not have any of these HWMUs and, therefore, these provisions do not apply to the EDT Facility.

I-1e(3): Closure of Waste Piles [401 KAR 34:210 Section 8]

Not applicable. The EDT Facility does not have any of these HWMUs and, therefore, these provisions do not apply to the EDT Facility.

I-1e(4): Closure of Surface Impoundments [401 KAR 34:200 Section 6]

Not applicable. The EDT Facility does not have any of these HWMUs and, therefore, these provisions do not apply to the EDT Facility.

I-1e(5): Closure of Incinerators [401 KAR 34:240]

Not applicable. The EDT Facility does not have any of these HWMUs and, therefore, these provisions do not apply to the EDT Facility.

I-1e(6): Closure of Landfills, and Land Treatment [401 KAR 34: 230 Section 6]

Not applicable. The EDT Facility does not have any of these HWMUs and, therefore, these provisions do not apply to the EDT Facility.

I-1e(7): Closure of Land Treatment [401 KAR 34:220 Section 6]

Not applicable. The EDT Facility does not have any of these HWMUs and, therefore, these provisions do not apply to the EDT Facility.

This document contained Export Control/International Traffic in Arms Regulations Information.

I-1e(8): Closure of Subpart X Units [401 KAR 34:250 Section 2, & 40 CFR 264.601]

EDT Facility includes both a Subpart X unit with a history of treating ~~li~~quid" agent and areas within the EEB without a history of ~~li~~quid" agent or other contamination. This approach includes:

(a) Wastes and waste constituents will be removed from the SDC/Subpart X unit

(b) Wastes and waste residues will be characterized and shipped offsite for appropriate final treatment and/or disposal

(c) Containments will be cleaned, sampled, and analyzed to determine whether cleaning and decontamination was effective.

(d) The BPBG Team will use rinse and wipe sampling for cleaning and decontamination of units in areas without a history of ~~li~~quid" agent contamination

(e) The SDC/Subpart X unit will be cleaned of debris/dusts, decontaminated, decontamination will be confirmed with wipe sampling, and the unit will be closed in-place. All wastes will be removed and shipped offsite to an appropriate, permitted RCRA facility.

I-1f: Closure Certification [401 KAR 35:070 Section 6; & 40 CFR 264.115]

Closure of each of the HWMUs will be included in a single closure report certified by the operator and an independent registered PE in accordance with 40 CFR 264.115. Certification is due within 60 days following completion of closure activities. The PE, or a representative, will be present during all critical, major closure activities. The PE or the facility owner or operator will orally notify KDEP in advance of any critical closure activity. These activities may include containment inspection, cleaning and decontaminating, wipe sampling, or sampling of final rinse. The frequency of inspections by the PE, or a representative, will be sufficient to determine the adequacy of each critical activity. The responsibilities of the certifying PE during closure are discussed in the preamble of the May 2, 1986, *Federal Register* amending the closure and post-closure requirements of 40 CFR Parts 264 and 265.

Within 60 days of completing closure activities, the BPBG Team will submit the closure report to KDEP with a Closure Certification Statement.

A closure certification statement (Figure I-2) will be included at the beginning of the certification report.

I-2: Post-Closure Plan [401 KAR 34:070 Section 2 and 34:250 & 40 CFR 264.118 and 264.601]

I-2a: Post-Closure Plan [401 KAR 34:070 Section 2 and 34:250 & 40 CFR 264.118 and 264.601]

These regulatory requirements are not applicable to the EDT Facility. Design of the facility does not include any waste disposal units, nor land treatment or storage units. If operations result in creation of SWMUs, a post-closure plan may become necessary but, unless this occurs, the BPBG Team will not perform post-closure care.

This document contained Export Control/International Traffic in Arms Regulations Information.

I-2b: Inspection Plan [401 KAR 34:070 Section 2 and 34:250 & 40 CFR 264.118 and 264.601]

Until closure of the EDT Facility is approved or turnover to BGAD has been accomplished, inspections of critical systems will continue and serve to ensure environmental releases do not occur. In addition, the routine SDC/Subpart X unit and Service Magazine inspections (i.e., those required by the RCRA permit or regulations) will continue until each HWMU is removed or approved for closure.

I-2c: Monitoring Plan [401 KAR 34:070 Section 2 and 34:250 & 40 CFR 264.118 and 264.601]

As long as agent-derived wastes remain at the EDT Facility, physical facility security will remain in place and air monitoring for mustard will continue.

I-3: Notices Required for Disposal Facilities

Not applicable. The EDT Facility does not include any disposal facilities; therefore, these regulatory requirements do not apply.

I-4: Closure Cost Estimate [401 KAR 34:090 Section 1 & 40 CFR 264.142]

Not applicable. The owner of the EDT Facility is the Federal government, which is not required to provide financial assurances or a closure cost estimate.

I-5: Financial Assurance Mechanism for Closure [401 KAR 34:090 Section 2 & 40 CFR 264.143]

Not applicable. The owner of the EDT Facility is the Federal government, which is not required to provide financial assurances or a closure cost estimate.

Figure I-1: EDT Preliminary Closure Schedule

The information on the EDT Facility Preliminary Closure Schedule provided in this section is based upon available information and the current understanding of the *EDT Facility End State,* and includes the following:

(a) The EDT closure will begin following the end of Agent Operations milestone tentatively scheduled in late 2017 or early 2018.

(b) The initial EDT closure activities (equipment decontamination) will be performed by workers on shifts operating 7 days per week and 24 hours per day.

(c) During the administrative portions of closure (e.g., validations of laboratory results, certification of monitoring results, follow-on turnover activities, preparation of closure report), the work will likely occur on a 5 day per week and 40 hour work week basis.

The duration, in weeks, for significant closure activities are indicated below:

EDT Closure Activities	Duration in Weeks
Initial Closure/Decontamination Activities	
OTS Decontamination	3[1]
DC Decontamination	6[1]
Process Ventilation Decontamination	9[1]
Decontamination for Balance of EDT Facility	2[1]
Laboratory Decontamination	3[2]
IONEX Filter Removal	1[3]
Restoration of EDT Equipment to Serviceable Condition	6
Administrative Closeout Activities	
Valid Analytical Data and Certify Monitoring Results	1
Preparation, Certification, and Submittal of RCRA Closure Report to KDEP	4[4]
Perform Building Maintenance	2
Perform all Preventive Maintenance (PM) on the EDT Equipment	1
Inventory EDT and Spare Parts	3
Issue the Campaign / EDT Decon / Turnover Report	1[5]
Turnover EDT Documents to U.S. Government	1
KDEP Review of EDT Facility RCRA Closure Report	6
Turnover EDT to U.S. Government	1[6]

[1] Decontamination activities expected to be ongoing simultaneously.

[2] Decontamination of Laboratory not performed until analytical samples for EDT Facility Closure are validated.

[3] Filters not removed until U.S. Army accepts closure based upon DOD standards/criteria.

[4] RCRA Closure Report will be under preparation throughout the duration of the Administrative Closeout Activities.

[5] Campaign / Decon / Closure Report will be under preparation throughout the duration of the chemical weapons operations period and during the Administrative Closeout Activities

[6] Actual turnover of accountability from contractor to U.S. Army expected to occur after KDEP accepts the RCRA closure report for the EDT Facility.

This document contained Export Control/International Traffic in Arms Regulations Information.

Figure I-2: Closure Certification Statement

SAMPLE

CLOSURE CERTIFICATION STATEMENT

UNIT(S) BEING CLOSED

"The hazardous waste management unit(s) at the facility described in the Closure Plan has been closed in accordance with the requirements in the approved Closure Plan. I certify under penalty of law that this document and all appendixes and attachments as applicable were prepared under my direction or supervision in accordance with a system designed to ensure that qualified personnel properly gathered and evaluated the information submitted. Based on my inquiry of the person or persons that manage the system or of persons directly responsible for gathering the information, the information submitted is, to the best of my knowledge and belief, true, accurate, and complete. I am aware that there are significant penalties for submitting false information, including the possibility of fine and imprisonment for knowing violations."

U. S. EPA Identification No.	Facility Name
Signature of Operator	Name and Title
Signature of Registered P.E.	Name and Registration No. of P.E.
Date	

This document contained Export Control/International Traffic in Arms Regulations Information.

Table I-1: Maximum Inventory of Wastes at Beginning of Closure

Hazardous Waste Management Unit	Location	Tons	Waste Name	Waste Number(s)
SDC – Subpart X Unit and <90-day Storage	EDT Facility	338	X99, S01; SDC Chamber Residue – *Scrap metal to be recycled and therefore, excluded from regulation as hazardous waste [40 CFR 261.2(e) and 261.6(a)(3)].	D004, D005, D006, D007, D008, D009, D010, D011, and/or N003
SDC – Subpart X Unit and <90-day Storage	EDT Facility	<1	S01; Agent-contaminated Derived-From KY Wastes – PPE, trash, rags, munitions dunnage, operations & maintenance wastes	D001, D002, D004, D005, D006, D007, D008, D009, D010, D011, D022, D026, D027, D028, D029, D030, D037, D039, D040, F001-F005, and/or N003
Laboratory – <90-day Storage	Laboratory	<1	S01; Laboratory Wastes & Solvents	D001, D002, D003, D004, D005, D006, D007, D008, D009, D010, D011, D022, D026, D027, D028, D029, D030, D037, D039, D040, F001-F005, and/or N003
<90-day Storage	EDT Facility	1.5	S01; Miscellaneous Wastes	D001, D002, D003, D004, D005, D006, D007, D008, D009, D010, D011, D022, D028, D030, D039, D040, F001-F005, and/or N003
<90-day Storage	SDC OTS	<1	S01; Liquid from OTS Scrubbers	D002, D004, D005, D006, D007, D008, D009, D010, D011, and/or N003
<90-day Storage	SDC OTS	1.5	S01; Solids from the Buffer Tank	D004, D005, D006, D007, D008, D009, D010, D011, and/or N003
<90-day Storage	SDC OTS	2	S01; Dry Salts and Particulates from the Spray Dryer	D004, D005, D006, D007, D008, D009, D010, D011, and/or N003
<90-day Storage	SDC OTS	3.5	S01; Particulates and Adsorbed Vapors from the Carbon Filters, HEPAs, and Prefilters from the Ionex Filter Bank	D001, D004, D005, D006, D007, D008, D009, D010, D011, and/or N003
<90-day Storage	SDC OTS	6	S01; Dust and Metal Oxides from the Bag House Filters	D004, D005, D006, D007, D008, D009, D010, D011, and/or N003

This document contained Export Control/International Traffic in Arms Regulations Information.

Table I-2: Clean Closure Criteria for Final Rinse and Soil Samples

					Clean Closure Criteria	
Constituent of Concern	**Sample Container[1]**	**Preservation**	**Hold Time[2]**	**SW-846 Test Method[3] (Preparation & Analysis)**	**Soil [4] RSL (mg/kg)**	**Tapwater [4] RSL (µg/L)**
Mustard (in solids)	P (Sealed Drums or Bags)	>68°F (with Temperature Recorded)	≥4 hours	MINICAMS®/DAAMS – Headspace Monitoring	<1VSL[5]	NA
Mustard (in liquids)	P	Cool to 4 deg. C	48 hours	Analytical Method Under Development	NA	TBD
Arsenic	P	HNO_3 to pH<2	6 months	3015/6020	2.4	0.045
Barium	P	HNO_3 to pH<2	6 months	3015/6020	19,000	290
Cadmium	P	HNO_3 to pH<2	6 months	3015/6020	80	0.69
Chromium	P	HNO_3 to pH<2	6 months	3015/6020	Note [6]	Note [6]
Lead	P	HNO_3 to pH<2	6 months	3015/6020	800.0	Note [7]
Mercury	P, G	HNO_3 to pH<2	28 days	3015/7470	4.3	0.063
Selenium	P	HNO_3 to pH<2	6 months	3015/6020	510	7.8
Silver	P	HNO_3 to pH<2	6 months	3015/6020	510	7.1
Benzene[8]	G	Cool to 4 deg. C	14 days	5031/8260	5.4	0.39
2-Butanone (MEK)	G	Cool to 4 deg. C	7 days	5031/8260	20,000	490
Carbon disulfide	G	Cool to 4 deg. C	14 days	5031/8260	370	72
Chloroform	G	Cool to 4 deg. C	14 days	5031/8260	1.5	0.19
1,4-Dichlorobenzene	G	Cool to 4 deg. C	14 days	5031/8260	12	0.42
1,1-Dichloroethylene	G	Cool to 4 deg. C	14 days	5031/8260	110	26

This document contained Export Control/International Traffic in Arms Regulations Information.

					Clean Closure Criteria	
Constituent of Concern	**Sample Container[1]**	**Preservation**	**Hold Time[2]**	**SW-846 Test Method[3] (Preparation & Analysis)**	**Soil [4] RSL (mg/kg)**	**Tapwater [4] RSL (µg/L)**
1,2-Dichloroethylene[9]	G	Cool to 4 deg. C	14 days	5031/8260	200	2.8
Ethylbenzene[8]	G	Cool to 4 deg. C	14 days	5031/8260	27.0	1.3
Methylene Chloride (Dichloromethane)	G	Cool to 4 deg. C	14 days	5031/8260	310	84
Methyl Isobutyl Ketone (MIBK)	G	Cool to 4 deg. C	14 days	5031/8260	5,300	100
Nitrobenzene	G	Cool to 4 deg. C	14 days	5031/8260	24.0	0.12
Tetrachloroethylene	G	Cool to 4 deg. C	14 days	5031/8260	41	3.5
Toluene[8]	G	Cool to 4 deg. C	14 days	5031/8260	4,500	86
Trichloroethylene	G	Cool to 4 deg. C	14 days	5031/8260	2	0.26
Xylenes[8]	G	Cool to 4 deg. C	14 days	5031/8260	270	19
Cresols[10]	G	Cool to <6 deg. C and adjust pH to <2 with H_2SO_4, HCL or $NAHSO_4$	14 days	3510/8041	6,200	140
Pentachlorophenol	G	Cool to <6 deg. C and adjust pH to <2 with H_2SO_4, HCL or $NAHSO_4$	14 days	3510/8041	2.7	0.035
TNT (2,4,6-Trinitrotoluene)	G	Cool to <6 deg. C	40 days	3535/8095	42	0.76
2,4,6-Trinitrophenyl Methylnitramine (Tetryl)	G	Cool to <6 deg. C	40 days	3535/8095	250	6.1

1

FOOTNOTES:
[1] P = Polyethylene, G = Amber Glass.
[2] Toxicity Characteristic Leaching Procedure (TCLP) extractions holding times are seven days for aqueous samples and 14 days for solid/soil samples. Specific analyses must occur within 40 days from the TCLP extraction completion. Method-specific holding times shown on the table are applicable to non-waste closure samples collected from site soils and water.
[3] USEPA, SW-846 Test Methods. The table contains suggested USEPA methods. Based upon generator knowledge and/or laboratory recommendation, other USEPA-approved preparation and analytical methods may be used depending upon the specific sample/waste matrix and/or quantitation limit capabilities. Samples collected for waste characterization will be extracted using USEPA Method 1311, TCLP, followed by method-specific preparation(s) and selected analysis (es).
[4] Regional Screening Levels, USEPA May 2013 version and/or background soil levels determined for BGAD will be used as background levels for the EDT Facility.
[5] Headspace air monitoring of wastes to evaluate risks to human health is described in Part C, monitoring equipment used is either near real-time (MINICAMS®) or laboratory analysis of agent collected on absorbent tube (DAAMS) usually within a few hours of collection. Thus sample container, preservation, or hold time are not at issue. Laboratory procedures developed prior to initial agent operations will provide details of this monitoring.
[6] No USEPA RSLs set for total chromium, the maximum contaminant level (MCL) for water is 100 µg/L and the MCL (Protective of Groundwater) for soil is 180,000 mg/kg.
[7] No USEPA Tapwater RSL for lead (Pb). However, the MCL in water for Pb is 15 µg/L.
[8] Included for cleanup in areas with potential fuel/petroleum impact to soil or water.
[9] RSLs for *cis*-1,2-dichloroethylene used as more conservative risk screen, not necessarily representative of actual constituent in the non-waste closure sample(s).
[10] Cresol analyses will be for total (all isomers) of Cresol. No attempt to delineate the isomer(s) will be undertaken and waste will be disposed based upon results for total Cresol.

mg/kg = milligrams per kilogram
µg/L = micrograms per liter

1
2

This document contained Export Control/International Traffic in Arms Regulations Information.

Part J: Other Federal Laws

The EDT Facility, located on the BGCAPP Main Plant, adheres to the existing permits of BGAD. The BGAD Chemical Storage Permit previously addressed other federal laws pertinent to the EDT Facility.

As stated in the BGAD Chemical Storage Permit, there are wetlands located at the BGAD. However, the EDT facilities will not affect these wetlands.

J-1: Wild and Scenic River Act

EDT Facility operations will not affect wild or scenic rivers.

J-2: National Historic Preservation Act

Operations of the EDT Facility will not affect cultural resources on the BGAD. No additional facilities will be constructed in support of EDT Facility operations. During EDT Facility construction, discovery of a cultural resource will require halting of construction activities and notification of appropriate personnel to identify and remove the item.

J-3: Endangered Species Act

There are two rare plant species, with one species of concern, located on the BGAD. The Kentucky State Nature Preserves Commission survey performed from 1992–1994 identified the Running Buffalo Clover and the Spinulose Wood Fern as rare plant species found on the BGAD. During this survey, a map of the areas in which these species were growing was prepared. The EDT Facility is not located in these areas.

BGAD has not identified endangered animal species on the BGAD or the area around the EDT Facility.

J-4: Coastal Zone Management Act

The operation of the EDT Facility will not affect any coastal zone areas.

J-5: Fish and Wildlife Coordination Act

The operation of the EDT Facility does not result in the impoundment, diversion, control, or modification of any surface water bodies; therefore, this act is not applicable.

This document contained Export Control/International Traffic in Arms Regulations Information.

Part K: Waste Minimization [401 KAR 38:090 Section 2(23) and 38:030 Section 1(12)(h)(4) & 40 CFR 270.30]

The operations of the EDT Facility will be conducted with waste minimization goals in mind. The BPBG Team is committed to excellence in environmental protection. All employees are stewards of the environment and responsible for the elimination, reduction, recycling, and proper disposal of waste. Source reduction and waste minimization are prime considerations in all phases of the SDC project: Design, Construction, Systemization, Operations, and Closure. Simply stated, the SDC environmental policy is:

> *"We will eliminate waste generation at the source wherever feasible without compromising quality. When waste generation occurs, we will employ practical measures to reduce its volume and toxicity."*

The BPBG Team's commitment to this policy will reduce overall risk exposure and allow achievement of these pollution prevention goals, resulting in an expected lifecycle cost savings for operation of the EDT Facility. The Facility Waste Minimization Plan is document 24915-00-G01-GGEN-00028.

Part L: Signatures [401 KAR 38:070 Section 7 & 40 CFR 270.11]

> *"I certify under penalty of law that this document and all attachments were prepared under my direction or supervision according to a system designed to assure that qualified personnel properly gather and evaluate the information submitted. Based on my inquiry of the person or persons who manage the system, or those persons directly responsible for gathering the information, the information submitted is, to the best of my knowledge and belief, true, accurate, and complete. I am aware that there are significant penalties for submitting false information, including the possibility of fine and imprisonment for knowing violations."*

Doug Omichinski
Project Manager
Bechtel Parsons Blue Grass
EDT Facility Operator

Lee G. Hudson
Colonel, U.S. Army
Commanding
EDT Facility Owner