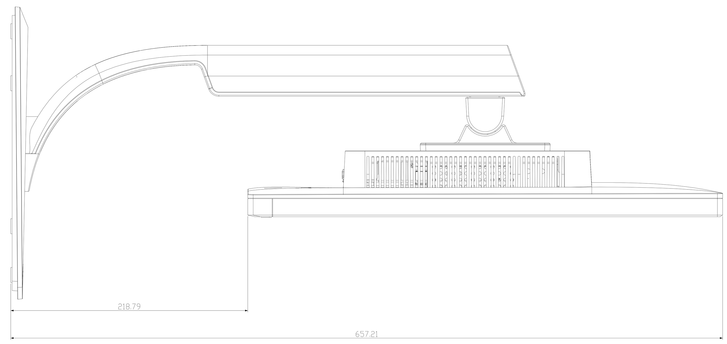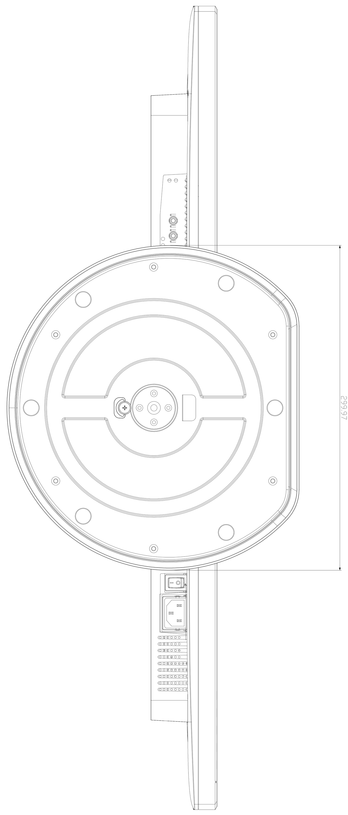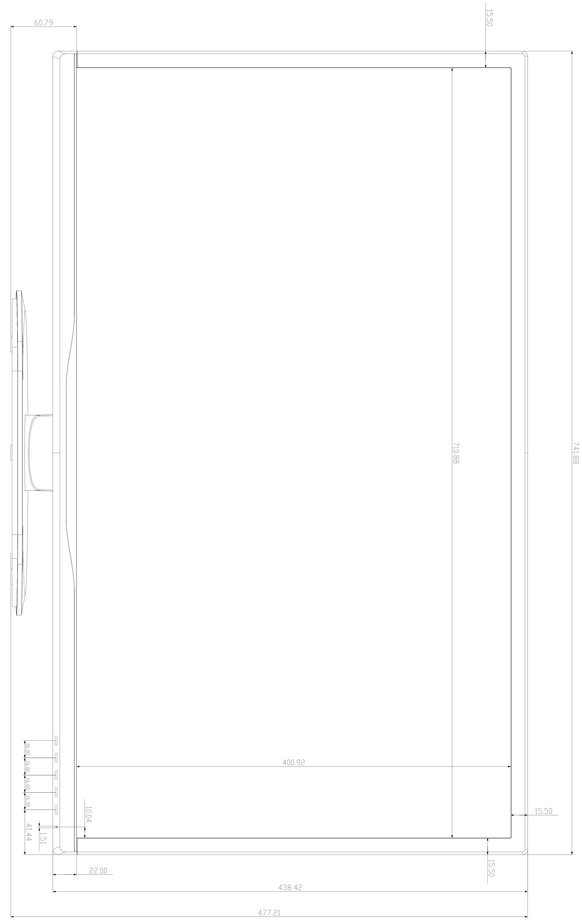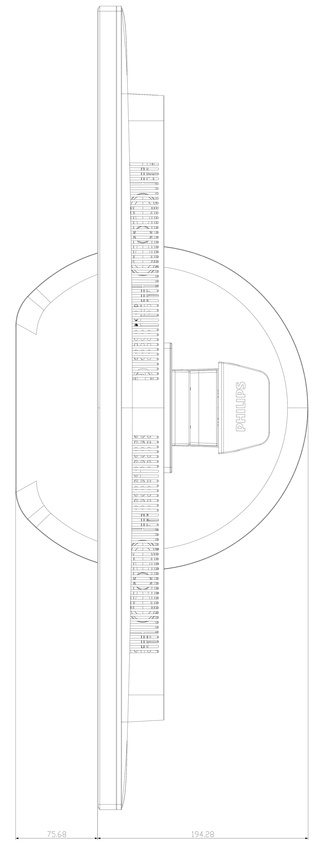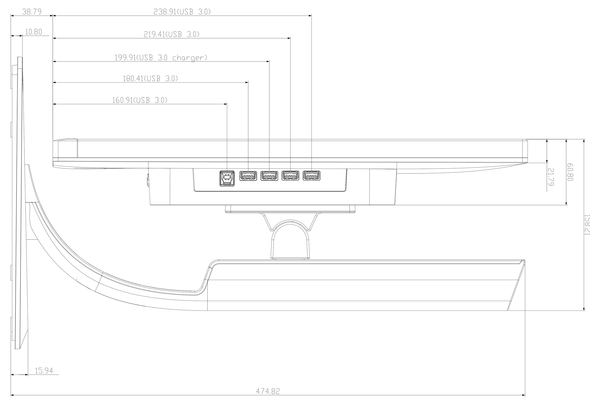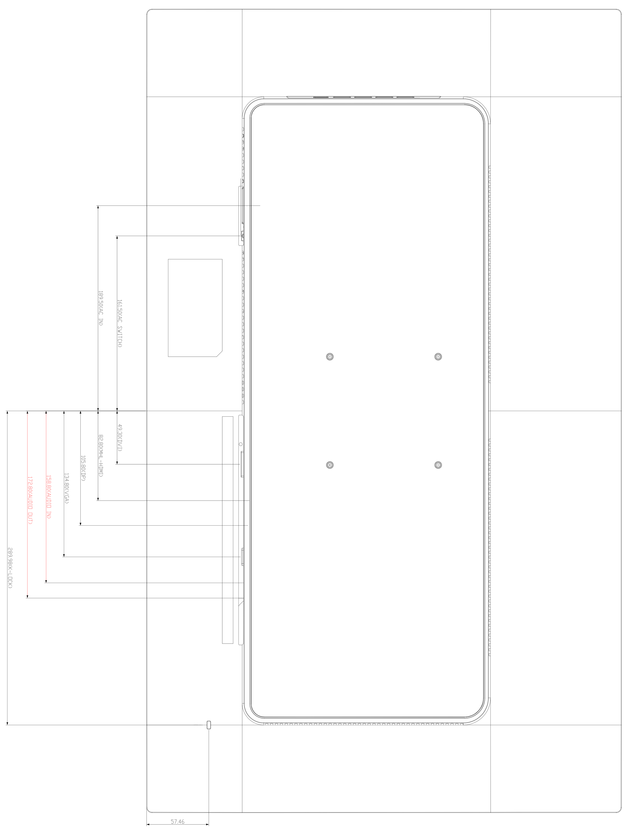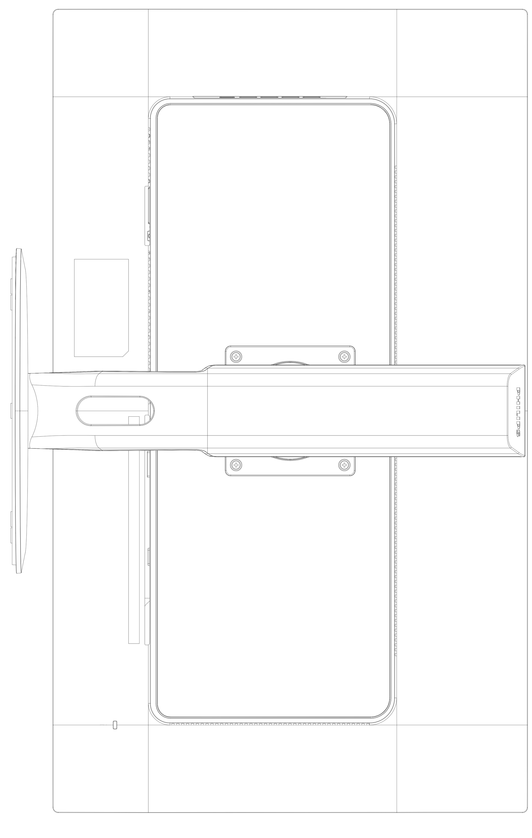PDF Complete
Your complimentary use period has ended. Thank you for using PDF Complete.
Click here to upgrade to Unlimited Pages and Printing.