EUROPEAN ORGANIZATION FOR NUCLEAR RESEARCH

CERN 72-18
NP Internal Report
19 September 1972

A NEW MAGNETOSTRICTIVE DELAY LINE

A. Vascotto

ABSTRACT

A sonic delay line is described, which is mainly intended for use in a wire spark chamber read-out system.

A careful design of the pulsing circuit has allowed the reaching of delays as long as 1 msec, while keeping the power injected in the writing coil reasonably small.

G E N E V A
1972

1. INTRODUCTION

One of the problems, arising when one wants to have sonic longitudinal delay lines long enough to be used in a read-out system for the large spark chambers now available, is that of reaching a good compromise between the size of the writing coil and the power dissipated in it. The former must be kept quite small in order to have a good time definition of the magnetostrictive signal, the latter can rise to dangerous values as one tries to compensate the attenuation along the line.

In the most common pulsing systems a squared voltage pulse is applied to the coil, producing in it a saw-tooth current which can reach values as high as 1.5 A. Under particular conditions the average current can damage the coil, whose wire is usually $\sim$ 0.05 mm in diameter.

Instead of going into special techniques, suitable only for industrial production (torsional delay lines, metallurgic processes), we tried to improve the existing delay lines[1].

2. THE PULSING CIRCUIT

The circuit (Fig. 1) has two inputs which accept TTL pulses. The incoming pulses are inverted and OR-ed before going to trigger an integrated monostable multivibrator, which provides a rectangular pulse of 400 nsec length (Fig. 2a).

This pulse turns on a transistor switch (see Fig. 2b), which makes the 4.7 nF condenser discharge into the writing coil (L_w) (see Fig. 2c). These two elements constitute an oscillating circuit tuned at 1.25 MHz. After a quarter of a period the diode D_2 starts conducting, keeping an almost constant current in L_w until the transistor switch is turned off again. At that moment the power stored in the coil is dissipated in the 220 Ω resistor, via the D_1 diode, while the 4.7 nF condenser starts charging itself again through the 82 Ω resistor. On the whole, the current in L_w has a trapezoidal shape, with a rise-time of 200 nsec, a flat top of 200 nsec (at $\sim$ 800 mA) and a fall-time of 100 nsec. The writing coil has 60 turns of 0.08 mm enamelled copper wire, wound on a plexiglas support whose dimensions are seen in Fig. 3. It is important to remark that this coil is able to stand without damage the maximum current (300 mA) supplied by the 82 Ω resistor, and even more so the average current of a

high pulse rate. The charging time of the 4.7 nF condenser is about 1 μsec (see Fig. 2c), which allows a minimum separation time of 1,5 μsec (i.e. 8 mm) between pulses, quite sufficient for wire spark chambers. For special needs, another pulsing circuit has been designed (Fig. 4), which allows a maximum pulse rate of 1.5 MHz.

3. DELAYING ELEMENT AND AMPLIFIER

The sonic pulse is generated by the writing coil L_w on an Fe-Co ribbon (Vacoflux) of 0.5 mm × 0.05 mm, supported by a Teflon tube of 1 mm inner diameter. The attenuation of the ribbon itself is smaller than that of a cylindrical wire; as regards the supporting tube, it contributes little to the attenuation as it is only in contact with the ribbon edges. Furthermore the line is wound in coils as large as 16 cm. Therefore one can still have in the reading coil pulses of 20 mV with ribbons of up to 3 m (∿ 600 μsec). Only for longer lines is the annealing process of the ends of the ribbon used[2)], allowing one to reach lengths of 5 m (∿ 1 msec) with a reasonable pulse height (Fig. 5a).

The reading coil has 120 turns of 0.03 mm enamelled copper wire, wound on the same kind of support as that for the writing coil; it is polarized by a small permanent magnet. Rubber dumping pads are provided, in order to cut down the reflections at the ribbon ends.

The amplifier is a well-known integrated differential comparator; one of its inputs is kept at such a voltage (adjusted once and for all) that it works on the lower knee of its characteristic. The output of the comparator (TTL) is sent to the two outputs of the module, connected together. The comparator is able to drive 10 inputs in parallel. The output pulses are seen in Fig. 5b.

4. CHARACTERISTICS

i) Two independent units are contained in a single width NIM module (Fig. 6).

ii) Each unit has two independent inputs: either of them can send pulses to the line, which is triggered on the positive-going edge of the pulse. As long as a high level is present at one input, the other one is gated off. Moreover, when not in use, an input puts itself at a high level; it therefore has to be grounded (a 50 Ω termination can be used).

For the input pulse specifications one can refer to those for TTL integrated circuits. There are no requirements concerning width and rise-time.

iii) A ground level at the gate input disables the input circuits. The gate is common to the two units in a module.

iv) The delay t depends on the length ℓ of the magnetostrictive ribbon according to the formula $t = 1.88 \times \ell$, where ℓ is in cm and t in μsec. Lengths of up to 5 m are allowed.

v) The two outputs (internally connected) are able to drive up to 10 TTL gates; the leading edge of the positive pulses is responsible for the time correlation. The pulse width depends on the comparator adjustment (200 to 500 nsec).

vi) The jitter is less than 5 nsec.

vii) Power supply per module : +24 V (6 mA average for 10 kHz pulse repetition rate in both lines);
+12 V (13 mA)
+6 V (40 mA)
-6 V (9 mA).

The construction of the mechanical parts for the sonic transducers has been carefully carried out by Mr. P. Dechelette.

REFERENCES

1) F. Bradamante and F. Sauli, CERN NP Internal Report 67-9 (1967).

2) V. Böhmer, S. Galster and H. Schopper, Nuclear Instrum. Methods 96, 601 (1971).

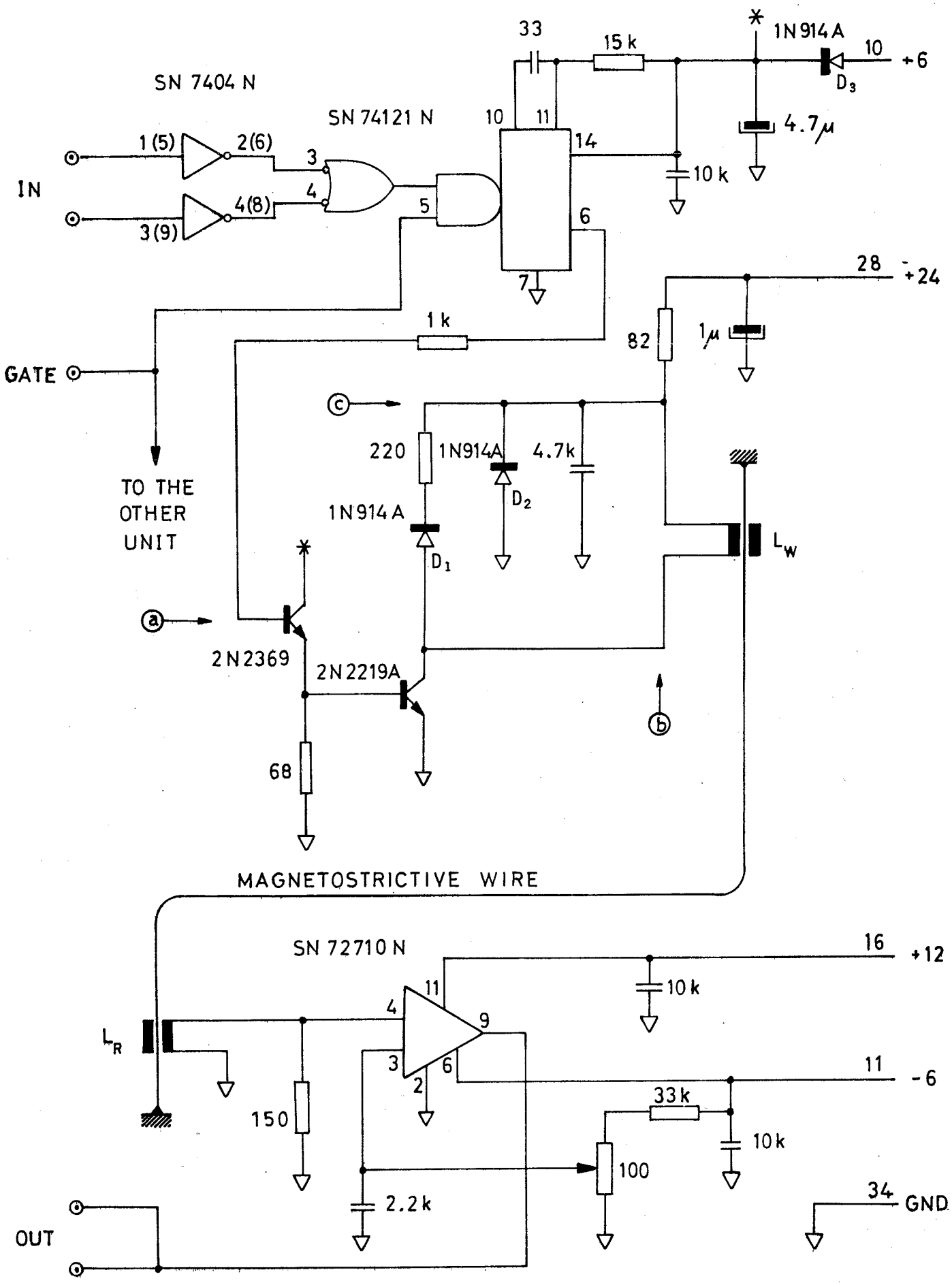

Fig. 1 Circuit diagram of the delay line

2 V/div

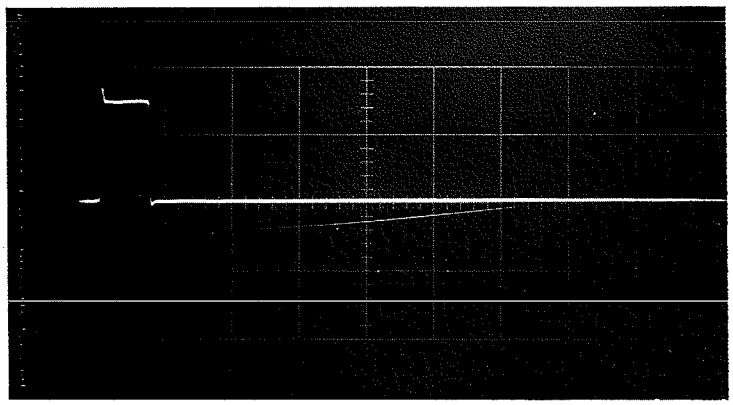

0 V

a)

500 nsec/div

20 V/div

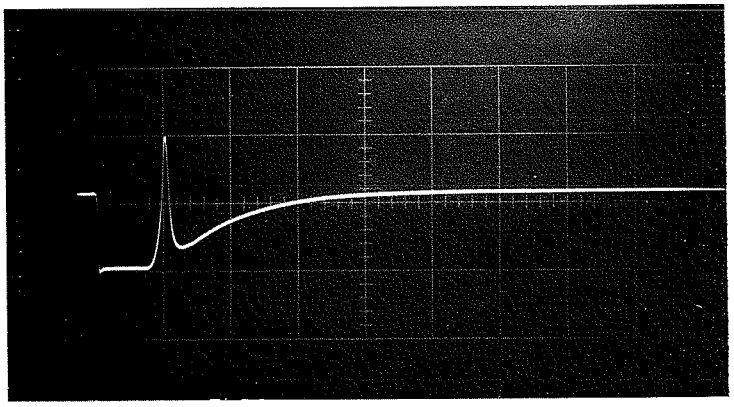

0 V

b)

500 nsec/div

20 V/div

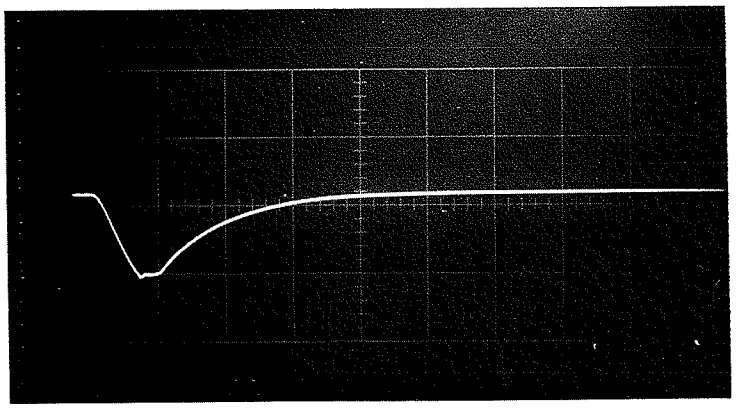

0 V

c)

500 nsec/div

Fig. 2 a), b), c) are the pulses seen at the corresponding points a, b, c in Fig. 1

SIS/R/17047

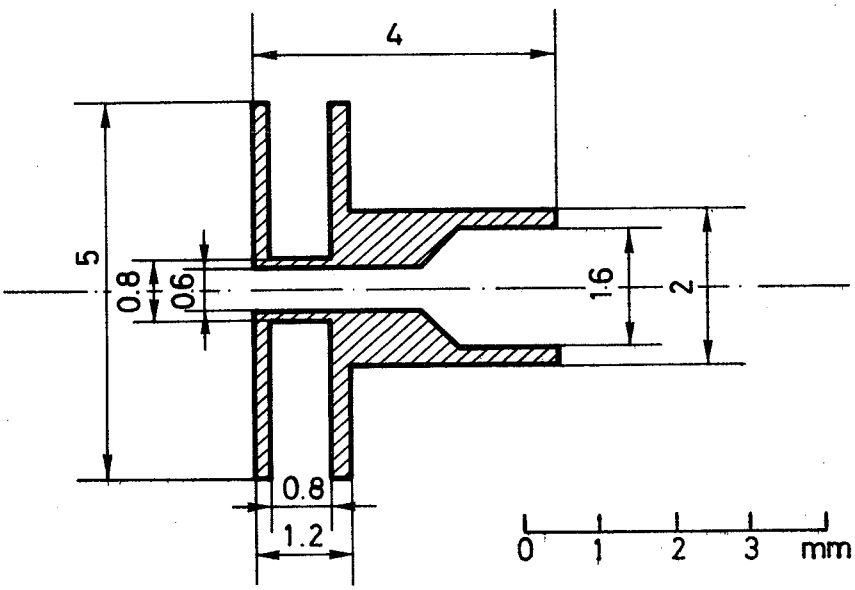

Fig. 3 Cross-section of the coil support

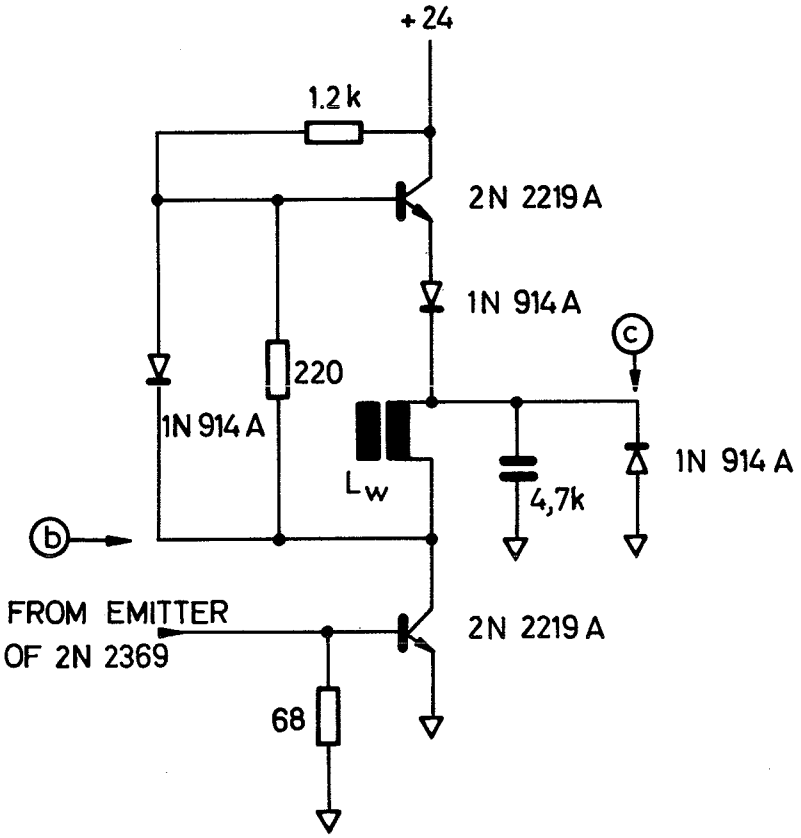

a)

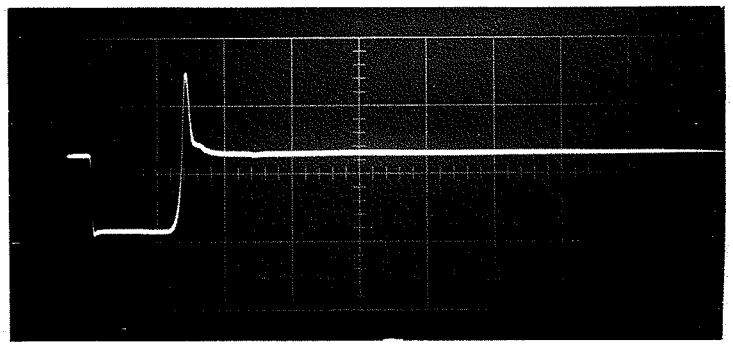

20 V/div

0 V

b)

500 nsec/div

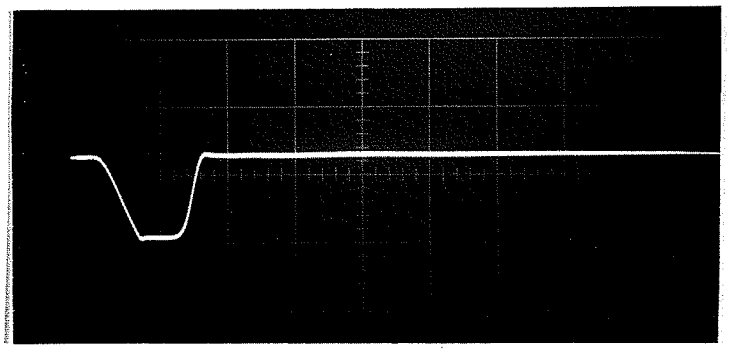

20 V/div

0 V

c)

500 nsec/div

Fig. 4 a) Diagram of the pulsing circuit with no dead-time

b), c) are the pulses seen at the corresponding points b and c in Fig. 4a

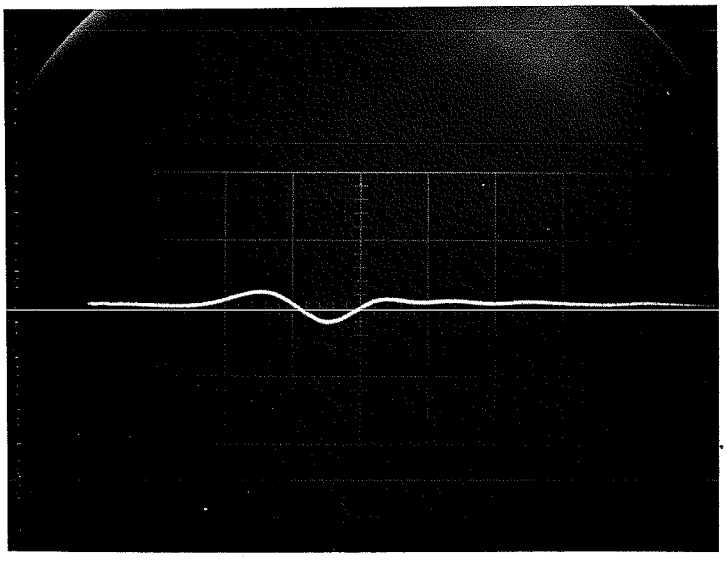

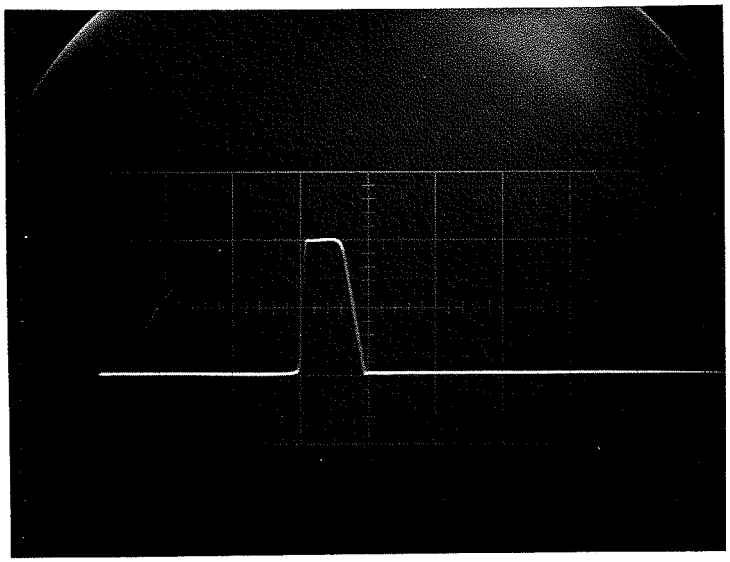

Fig. 5 a) Delayed pulse seen at the reading coil
b) Output pulse

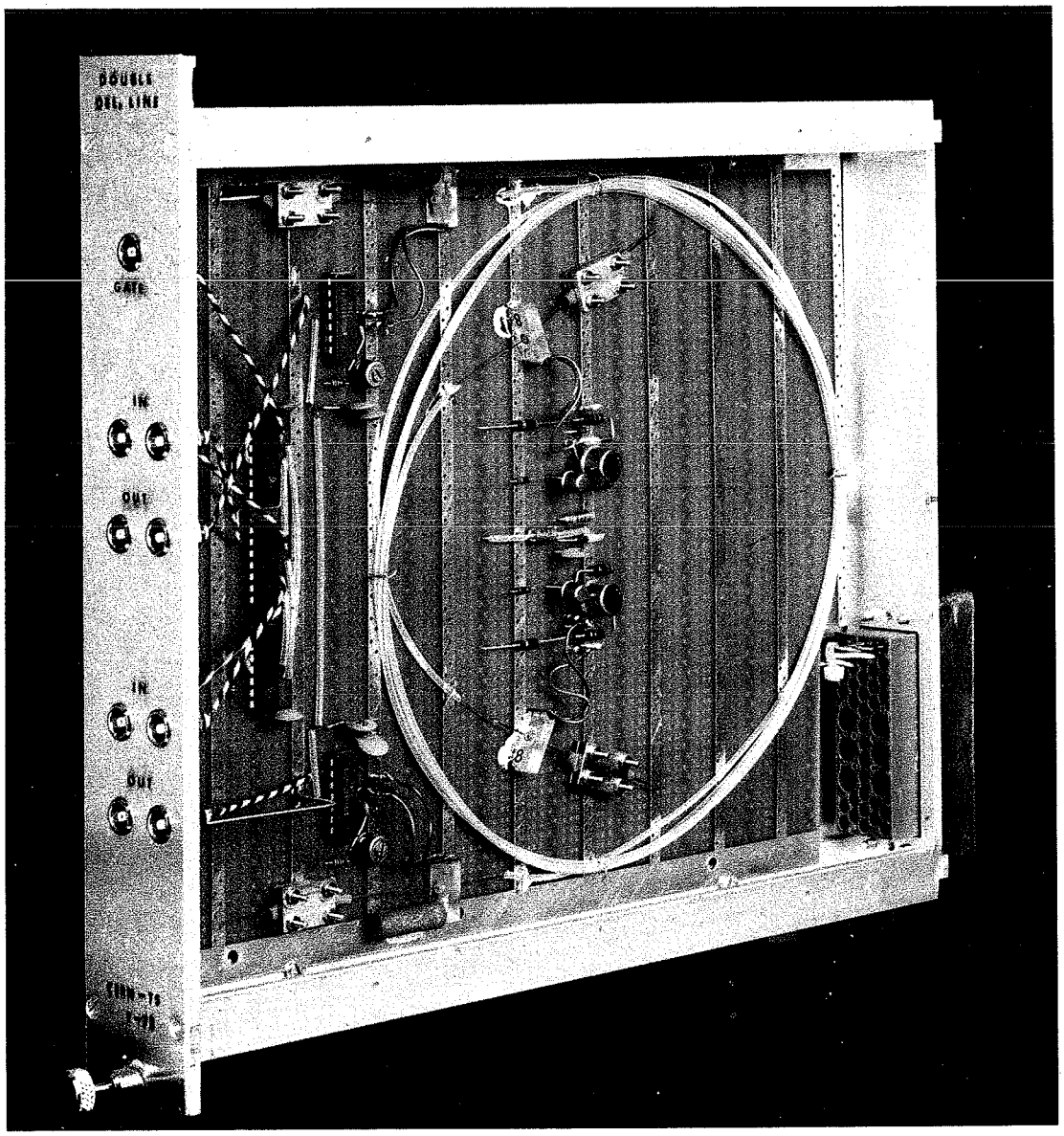

Fig. 6 View of the module