ULTRASONIC DELAY LINES AND THEIR APPLICATIONS TO TELEVISION

by C. F. BROCKELSBY *) and J. S. PALFREEMAN *).

534.321.9-14/-16

Ultrasonic delay lines and their applications have been studied at the Mullard Research Laboratories for the past 15 years. The subject has long outgrown the space that can normally be allowed in a journal and in fact its theory and practice, together with many design details of delay lines, have recently been dealt with in a book [2]) *published by the above authors in conjunction with R. W. Gibson. In the present article the limitation to one special though noteworthy field of application has offered the opportunity to consider the main problems of ultrasonic delay lines and to discuss some of the developments by M.R.L., while at the same time an idea is given of the variety of types of delay lines that exist and of the characteristics that can be achieved.*

In many applications it is necessary to delay an electrical signal for a given period and to recover the signal after this time without appreciable distortion. The need for such a delay arose in the early days of telephony, and electrical delay circuits were developed to provide the comparatively short delays needed.

The delay systems used consisted of electrical transmission lines using lumped or distributed components, e.g. a coaxial cable; the required delay was achieved at the expense of attenuation and often some distortion of the signal. Such systems are practicable for obtaining delays up to a few microseconds in length, and where the bandwidth of the signal is not large. In modern electronics, however, applications occur for delay systems having delays of a few milliseconds with bandwidths of several Mc/s. It is to satisfy these requirements that ultrasonic delay lines have been developed.

In an ultrasonic delay system the electrical signal (oscillation of electric potential) to be delayed is converted into a corresponding mechanical vibration (i.e. described by the same function of time) and launched into a suitable solid or liquid delay medium. The designation "ultrasonic" simply stems from the fact that the electrical signals will usually have frequencies higher than 20 kc/s, putting the corresponding mechanical vibrations into the ultrasonic range. The velocity of mechanical waves in liquids and solids lies in the range 1-6 km/s, a factor approximately 10^5 lower than the velocity of an electrical signal along a coaxial cable. Thus a long delay can be obtained using a comparatively short path length in the medium, for example if fused quartz is used as the delay medium; a delay of approx. 2.5 ms can be obtained in a path length of 10 metres. After the mechanical wave has travelled a distance such that the vibration has undergone the required delay, it is converted back into an electrical signal.

The first application of ultrasonic delay line techniques was in the pre-war "Scophony" television receiver where use was made of the variations in density of the water in a system resembling a delay line to provide optical readout of the video signal (see page 243). Ultrasonic delay line systems first came into prominence, however, during the Second World War, and pioneer work at the British Telecommunications Research Establishment (now known as the Royal Radar Establishment) later resulted in the development of a water delay line for use as an information storage device in Doppler radar. Meanwhile, in 1942, the first ultrasonic delay line to be used for a wartime application was produced at the Bell Telephone Laboratories, a mixture of water and ethylene glycol being used as the delay medium. It was soon discovered that mercury was a more suitable delay medium and many radar systems were developed using mercury delay lines.

Early work at the Telecommunications Research Establishment (1943) showed that vitreous fused quartz was likely to prove a valuable solid delay medium at frequencies at least up to 10 Mc/s. Much basic work on the properties of solid delay media was carried out at the Massachusetts Institute of Technology and the Bell Telephone Laboratories. Solid delay lines are extensively used nowadays and suitable designs enable long delays to be obtained in a compact space (see page 242). In 1949 Bradburd showed that magnetostrictive wire could also be conveniently used as an ultrasonic delay medium.

Although ultrasonic lines were originally developed as information storage devices in the radar field, their field of application has widened considerably in the last few years. They are now used extensively in digital and analogue computers, in communications networks, and in instrumentation based on pulse

---

*) Mullard Research Laboratories, Salfords (Surrey), England.

timing [1]). Several applications of ultrasonic delay techniques occur in the field of television and the discussion of ultrasonic delay lines in this article, after a general introduction to such lines, will concentrate on this group of applications (page 243 ff.). They are found to occur in the television studio, in the research laboratory, and in some possible kinds of domestic receiver.

I. THE DIFFERENT TYPES OF DELAY LINES, AND GENERAL CONSIDERATIONS [2])

From the above it follows that an ultrasonic delay line consists basically of three components. First there is a device known as a transducer which converts the electrical signal into a mechanical vibration. Second there is the delay medium through which the mechanical signal travels and undergoes the required delay. Finally there is a second transducer which converts the mechanical vibration into the required electrical signal.

Ultrasonic delay lines may be divided into three main categories, using *wires*, *liquids*, and extended *solids* respectively as the delay media. These three types of line differ markedly in the mode of vibration employed for transmission and hence in the form of transducer required. Some principles of delay lines will now be explained using the comparatively simple wire line as an example. General considerations applying to liquid and solid lines will be given afterwards, followed by some details of these lines.

Wire delay lines

In a wire delay line the electrical signal is converted into a mechanical oscillation of a magnetostrictive wire or tube. A magnetostrictive material will undergo reversible expansion or contraction in the direction of an applied magnetic field, owing to internal stresses arising as the magnetic dipoles are diverted from their preferred orientations. Conversely a mechanical deformation of such a material will give rise to a magnetic flux. Thus by passing a fluctuating current through a coil surrounding the wire a longitudinal mechanical wave can be launched down the wire, and this wave can be detected at the output end of the line by another coil surrounding the wire, the change of magnetic flux through this coil giving rise to the desired electrical signal.

Magnetostriction is a square law effect, i.e. both positive and negative currents through the input coil will cause deformation of the wire in one sense only. In order to obtain a more linear characteristic, bias must be provided by means of a current or by a magnet as shown in *fig. 1*.

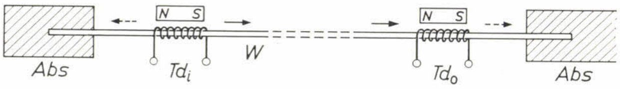

Fig. 1. Wire delay line. The electrical input signal fed to the input transducer $Td_{\rm i}$ launches an acoustic wave down the wire *W*; this wave induces a voltage in the coil of the output transducer $Td_{\rm o}$. Reflections from the ends of the wire are prevented by the use of absorbent terminations *Abs*.

The delay obtained may be adjusted if necessary by sliding the coil along the wire, and this is a useful facility. Since signals may travel in either direction along the wire, absorbent terminations must be placed at each end of the wire to prevent reflections.

If a direct current is passed down the wire in addition to the alternating signal current in the coil, a helical magnetic field with alternating pitch results. Under these circumstances the signal is propagated as a *torsional* vibration. This has the advantage that a greater delay is obtained using the same length of wire. Another advantage is that the line may be coiled into a spiral for compactness of layout, as shown in *fig. 2*. This is not possible with a

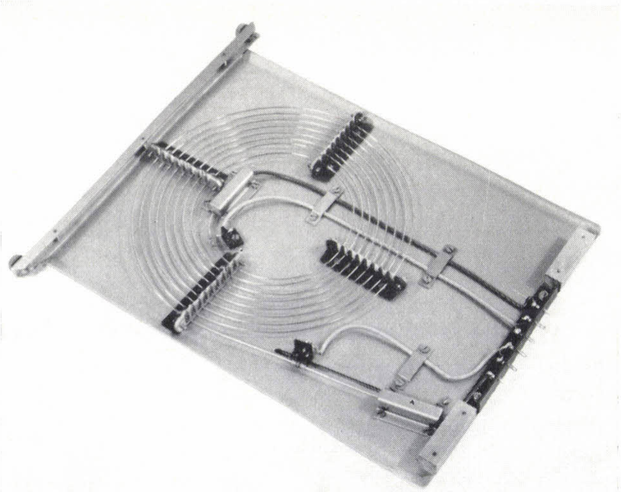

Fig. 2. Practical wire delay line (Mullard). A torsional wave is propagated down the line by passing a direct current along the wire itself in addition to the signal current in the coil. The wire itself is coiled into a spiral for convenience of layout.

---

[1]) See for example H. A. Dell, D. S. Hobbs and M. S. Richards, An automatic particle counter and sizer, Philips tech. Rev. **21**, 253-267, 1959/60.

[2]) A detailed account of most of the information contained in the first part of this article is given in the book: Ultrasonic delay lines, by C. F. Brockelsby, J. S. Palfreeman and R. W. Gibson, published by Iliffe, London 1963. A list of references to the literature on the history of delay lines and on many developments mentioned in this article is also given in this book.

compressional vibration since bending of the wire would cause excessive frequency dispersion (differences in velocity of travel along the wire for different frequency components of the signal) resulting in excessive distortion. This effect never becomes serious for a torsional vibration even if the wire is bent.

Efficient conversion of electrical to mechanical energy is achieved only at frequencies near the mechanical resonance of the transducer: the resonance frequency is the centre frequency of the frequency band transmitted by the delay line. In the conventional designs of figs.1 and 2 the transducer consists of the coil together with that portion of the wire in which it produces an appreciable magnetic field. This means that for high frequency applications the excited length of the wire, enclosed by the coil, must be extremely short, and the difficulty of making very short coils thus imposes a practical limit of about 1Mc/s on the centre frequency. Because of this limitation wire delay lines are little used in television applications. In addition wire lines always degrade the signal owing to the existence within the material of inhomogeneities and grain boundaries at which reflection and refraction occur, thus limiting the usable bandwidth; the degradation is enhanced if the wire is coiled. Despite these limitations, however, wire delay lines are used in the field of digital computing where frequencies are lower and a lower bandwidth is acceptable.

The output signal of a wire delay line (and for that matter, of other delay lines too) is basically the second differential of the input, since the input and output transducers respond to changes in flux only. For sinusoidal operation this is of little consequence, since the shape of a sine wave is unchanged by differentiation. For arbitrary signals the differentiation will result in a linear distortion, and a compensation (de-emphasis of higher frequencies) may be necessary in the output. In digital computing, however, linearity is not important.

The choice of the delay line material depends chiefly on the intensity of the magnetostrictive effect. The velocity of propagation and the damping per unit length (or rather per unit delay time) should also be taken into account, but the first requirement does not leave much choice: nickel, nickel alloys or a special iron-cobalt alloy ("Permendur") are used for most applications of wire delay lines.

Liquid and solid delay lines: propagation patterns, transducer behaviour

Liquid and solid delay lines have a number of important problems in common, especially those relating to the patterns of wave propagation and to the energy flow between external circuit, transducer and delay medium and vice versa. These problems will be considered first and separate sections will be devoted to the design of transducer and choice of delay medium for a) liquid and b) solid delay lines.

Both for liquid and solid lines the transducers are based on the piezoelectric effect. A piezoelectric material is one which undergoes reversible deformation on application of an electric field and which gives rise to a field when it is strained. Crystalline quartz exhibits this phenomenon, and some polarised ferroelectric ceramic materials behave in a very similar manner. A thin circular slice of crystalline quartz cut in a suitable orientation from a monocrystal is often used as transducer. The electrical input signal is applied to thin metal film electrodes coated on each face of the crystal wafer. The field produced causes a varying deformation of the crystal, thus launching a mechanical wave in the delay line medium which is in contact with one of the faces. The resultant wave travels through the delay medium along a path that will be discussed presently, ultimately arriving at the output end of the line where it produces a mechanical deformation of an identical crystal which forms the output transducer. This gives rise to an electric field in the crystal, and the signal is detected as a voltage signal on the electrodes.

Closer consideration of the process reveals that the size and orientation of the transducer used are of considerable importance in determining the properties of the line. Consider a circular disc transducer of diameter d radiating ultrasound of wavelength λ into an unbounded medium. If the transducer were a point source it would radiate spherical waves and the fraction of energy received by a receiver would depend only on the solid angle which it subtended at the source. The transducer not being a point source, it may be shown that the energy is emitted as a beam parallel to the transducer axis up to a distance approximately d^2/λ from the source. The region where the wave is defined by this beam is known as the "near field" (or Fresnel zone), and if the output transducer, also of diameter d, is placed within this region it will receive substantially all the energy radiated. Ideally, the transducers should always be chosen of such a size that the path traversed by the wave in the medium lies within the near field. Since the size of the transducers is limited, however, this is not practicable if the delay required is long.

At distances greater than d^2/λ from the source the energy is distributed in a diffraction pattern, constituting a number of lobes when plotted in a polar diagram. This region is known as the "far field" (or Fraunhofer zone). Most of the vibration energy is contained in the principal lobe of this pattern, and the output transducer must be positioned to receive this lobe. It will then receive a fraction of the transmitted energy which is directly proportional to the area of the transducer and inversely proportional to the square of its distance from the source; the fraction of energy received is thus proportional to the solid angle which the receiver subtends at the source, but it is still much larger than that which it would receive from a point source.

In order for the incident signal to produce a disturbance which is in phase at all points across the face of the output transducer, this device must be aligned approximately normal to the incident beam. This situation, however, is not strictly necessary. More generally, a polar diagram can also be drawn for the response of the output transducer, making the situation entirely symmetrical: in fact it may be demonstrated that the energy transfer through a delay system is independent of which transducer is the input and which is the output.

In order to obtain the required delay, the path traversed by the wave in the medium may need to be several metres long; to obtain a straight path of this length is often difficult and sometimes impossible. For this reason a "folded" path must be used, in which the signal is deliberately made to undergo reflections from the boundaries of the medium during its passage from input to output. At each reflection the shape of the diffraction pattern is slightly altered but in practice such changes may usually be neglected. Each reflection may be regarded as specular, and the delay system may be approximated by a model in which the two transducers are separated by a distance equal to the total path traversed by the wave in the medium.

Since d^2/λ is the governing parameter, the transition from near field to far field will be seen to occur at larger distances the higher the frequency. In other words the principal lobe of the propagation pattern will be narrowest for the highest frequencies contained in a signal and this will cause a relative loss of *low frequency* intensity received at the output when the wave has travelled a long distance in the delay medium. On the other hand a certain amount of the wave energy is dissipated in the medium owing to viscous damping and thermal effects, and in solids losses also occur due to scattering of the signal by inhomogeneities in the medium. These losses in all cases increase with frequency, in some cases even according to a square law (see page 240), entailing a relative loss of *high frequencies* at long delays. Both effects combined are responsible for a fundamental limitation of delay lines: long delays can only be achieved at the expense of useful bandwidth. However, the bandwidth is also limited by several other factors, which will be discussed below.

Since in the far field some of the energy transmitted is contained in the minor lobes of a diffraction pattern, it is possible for signals to arrive at the output having traversed paths different from that defined for the main signal. If these "secondary" signals happen to be incident at an angle corresponding to one of the minor lobes of the output transducer polar diagram they will be detected; these signals have in general undergone delays different from that experienced by the main signal and thus constitute a source of interference which may be particularly noticeable in lines where many reflecting surfaces are present, and in lines where the attenuation is appreciable: secondary signals which have travelled on a much shorter path than the main signal will then have a relative advantage. One task of the delay line designer is to minimise these spurious signals: they should be at least 50 dB weaker than the wanted signal. This may be achieved by using transducers of the largest lateral dimensions conveniently practicable, in order to confine most of the energy transmitted and received to the principal lobe of the polar diagram of each transducer; some improvement may also be obtained by putting absorbent material on walls of the delay line which cause particularly troublesome reflections, or by grinding these faces away to alter the direction of the reflection wave.

One commonly encountered unwanted signal is the "third-time-round" signal which is reflected by the output transducer, returns by the same path to the input, and is reflected back to the receiver again. This signal can be reduced to negligible amplitude at any particular frequency by tilting the output transducer through a small angle Θ. This angle is chosen so that, while the main signal still falls within the principal lobe of the output transducer polar diagram, the angle of incidence of the third-time-round signal ($3\,\Theta$) corresponds to the first minimum of this polar diagram. This will only be effective for a narrow frequency band since the angular spacing of the lobes of the diffraction pattern depends on the frequency.

Other important considerations common to both liquid and solid delay lines, as stated above, refer to the behaviour of the transducers and their coupling to the delay medium. This will be very roughly described in the following paragraphs. The subject is rather complex and a full treatment would require much more space than can be allowed here.

In the static or quasistatic case (i.e. at low frequencies) a constant fraction k^2 of the electrical energy supplied to a piezo-electric crystal is stored as elastic energy in the deformed crystal; k is called the electromechanical coupling coefficient of the transducer material. On first sight it would seem that for efficient energy conversion at any frequency, k should be as large as possible. This condition, however, is neither sufficient nor necessary. That it is not sufficient is seen by considering the mechanical response of the crystal wafer to a given electrical input. The response will be greatest (i.e. resonance will occur) when the wafer thickness, measured in the direction of propagation, is equal to half the wavelength (or an odd multiple of it) of the ultrasound in the transducer material. If the thickness is an even multiple of it, the response is zero and thus a transducer chosen to give maximum response at e.g. 10 Mc/s will give zero response (and zero energy conversion) at 20 Mc/s — whatever its value of k. On the other hand it can be seen that a high k is not strictly necessary. A transducer crystal may be represented very approximately by a capacitance in parallel with a resistance representing the mechanical strain energy flowing out from the crystal (radiation resistance). No energy is *dissipated* in the system even when k is low, since the portion of the electrical energy which is *not* converted into mechanical strain energy is stored in the transducer capacitance and released when this capacitance is discharged.

Thus, k is not a direct measure of the efficiency of a transducer, this depending in addition on the internal losses and external loading of the transducer crystal, and should be discussed in terms of *energy flow*. Nevertheless, the coupling coefficient k is of fundamental importance and controls some aspects of transducer performance.

In the first place, if k is low (i.e. $k^2 \ll 1$) then the effect of the electrical terminations on the behaviour of the transducer may be neglected. If the voltage drive is constant then the mechanical response of the transducer at the resonant frequency is determined by the ratio of the "acoustic impedance" of the medium to that of the transducer. For a progressive wave the acoustic impedance of a material is defined as the complex ratio of the stress in the medium at any point to the "particle" velocity, and is directly analogous to impedance in electrical systems. The specific acoustic impedance may be shown to be equal to the product of the density of the medium and the velocity of the acoustic wave [3]). Thus, if the coupling coefficient k is low, the acoustic response at the resonant frequency is determined by the relative densities of the transducer and delay medium and the relative velocities of the acoustic wave in the two materials.

For a low-k transducer, loaded on one face only, it may be shown that the *fractional bandwidth* $\Delta f/f$, where $\frac{1}{2}\Delta f$ is defined by a decrease in response of 3 dB, is very approximately equal to $2/\pi$ times the ratio of the specific acoustic impedance of the medium (Z_1) to that of the transducer (Z_0) [2]). Thus, if the medium has a much lower accoustic impedance than the transducer, the fractional bandwidth is small, and it will be higher the more the impedance of the medium approaches or surpasses that of the transducer; see *fig. 3*. The most suitable condition, however, is obtained if these impedances are equal ($Z_1/Z_0 = 1$). The transducer and delay medium are then said to be matched acoustically and in that case the amount of energy reflected from the boundary

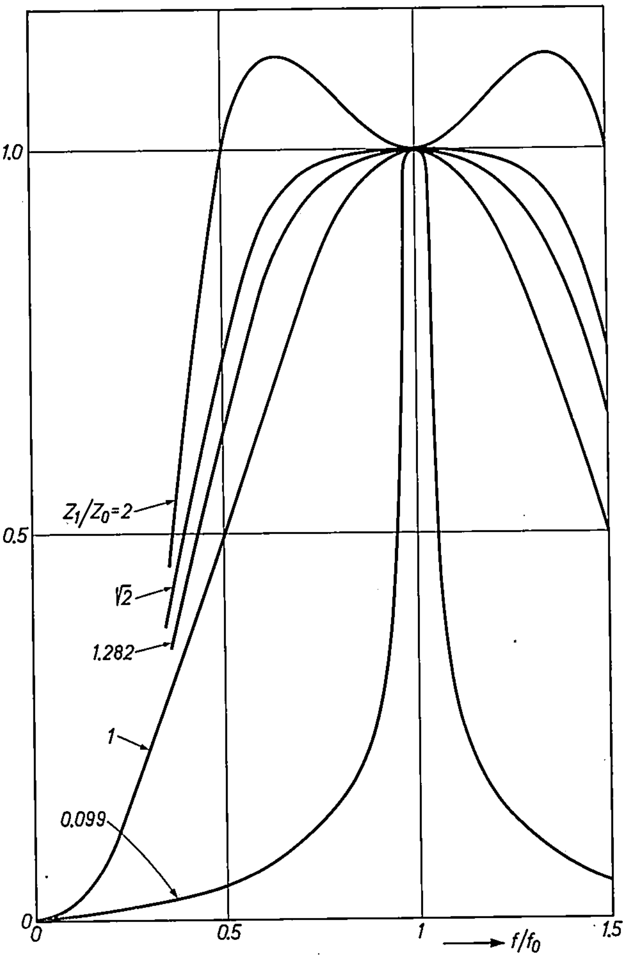

Fig. 3. Response of an X-cut quartz crystal transducer, unbacked, in a liquid medium, with various ratios Z_1/Z_0 of the specific acoustic impedance of the medium to that of the transducer. For water $Z_1/Z_0 = 0.099$; for mercury $Z_1/Z_0 = 1.282$.

---

[3]) T. F. Hueter and R. H. Bolt, Sonics, Wiley, New York 1955.

between them is zero. Any energy which is reflected from the face of the output transducer produces no output and is not detected at the output except as an unwanted signal (the "third-time-round" signal mentioned above). This troublesome effect, therefore, is minimised by the acoustical matching. The fractional bandwidth in this case evidently is given by $2/\pi$, which is a sizeable portion of the ideal value 2 that would be permitted by the resonance behaviour of the vibrating wafer considered above (cf. the example of maximum response at 10 Mc/s, when the response can differ from zero in the band between 0 and 20 Mc/s).

When using the concept of energy flow the mechanical wave entering the output transducer should also be considered. Part of its energy will be used for producing the output signal, but in a low-k material a relatively large part of the wave energy will not be made use of in this way and will proceed to the back of the transducer. If this face is loaded with a material of negligible acoustic impedance, such as air, then energy which is incident on this face is almost totally reflected and may again give rise to a third-time-round signal. In a practical delay line it is therefore often desirable to "back" the transducer with an absorbent medium of acoustic impedance similar to that of the transducer.

When the coupling coefficient k is high, the electromechanical response of the transducer depends not only on the ratio of the acoustic impedances but also on the electrical terminations of the system. In this case acoustical matching is not so important since an appreciable part of the mechanical power is usually converted into electrical output power and for this reason is not liable to reflection.

To conclude these general considerations the importance of a low attenuation of the signal in the medium should be stressed. As will be shown later, the electrical terminations which must be used to obtain an electrical bandwidth comparable to the acoustic bandwidth result in a voltage loss of perhaps 40 or 50 dB, if low-k transducers are used. The total voltage transfer ratio $V_{\text{in}}/V_{\text{out}}$ should not exceed 60 or 70 dB, since a convenient level for the input signal is of the order of one volt and the output signal should not be reduced to much less than 1 mV, lest the effect of electrical noise in the output circuit should become appreciable. Thus, the loss in the medium should not amount to more than 20 dB. When long wide-bandwidth delays are required, this low loss value is only possible if the attenuation per unit delay is very small indeed. This will normally confine the choice of media to an extremely limited number of materials.

Liquid delay lines: delay medium and design

Mechanical vibrations in liquids can only be supported in a compressional mode, torsional or shear oscillations being impossible. An X-cut crystalline quartz wafer undergoes a compressional change under the influence of an electrical field and may therefore be used as a transducer in a delay line employing a liquid delay medium.

The choice of the liquid delay medium is determined by its acoustical properties and by those of the transducer. The attenuation of most liquids is too high; apart from the liquefied monatomic gases, only mercury, water, and the lower alcohols have a low enough attenuation. In addition, since the value of k, the electromechanical coupling coefficient, is only 0.1 for crystalline quartz, a large fractional bandwidth can only be obtained if the specific acoustic impedance of the transducer is similar to that of the delay medium. In this case this requirement means that the transducer must be loaded with a medium of high density. It is found that mercury and crystalline quartz are approximately matched acoustically.

Since mercury is a conductor, it is only necessary for the back of the transducer to be coated with a gold film electrode. The other electrode of the transducer consists of the mercury in contact with the front face.

Ferroelectric ceramic transducers have higher ~~values of the~~ electromechanical coupling coefficient, typical values being 0.45 for compressional waves and 0.65 for shear waves. However, these materials have the disadvantage that it is very difficult to obtain the extremely thin samples necessary for use at very high frequencies. For this reason the practical limit on the use of ceramic transducers is about 20 Mc/s.

If the mercury delay medium is in contact with a steel surface, then a wave striking the liquid/solid interface at an angle of more than 10° to the normal will undergo total reflection. This property is employed in the variable mercury delay line illustrated in *fig. 4*. The signal from the input transducer travels through the mercury and falls on the steel "corner reflector" as shown. Here the signal suffers two reflections at approximately 45° and is thus reflected back to the output transducer which is mounted beside the input. The reflector is mounted on a piston, so that the path-length in the medium can be changed. Thus a liquid delay line can be made continuously variable in length, and this is of considerable importance in some television applications.

This property of total internal reflection is also employed in the fixed path length delay line shown

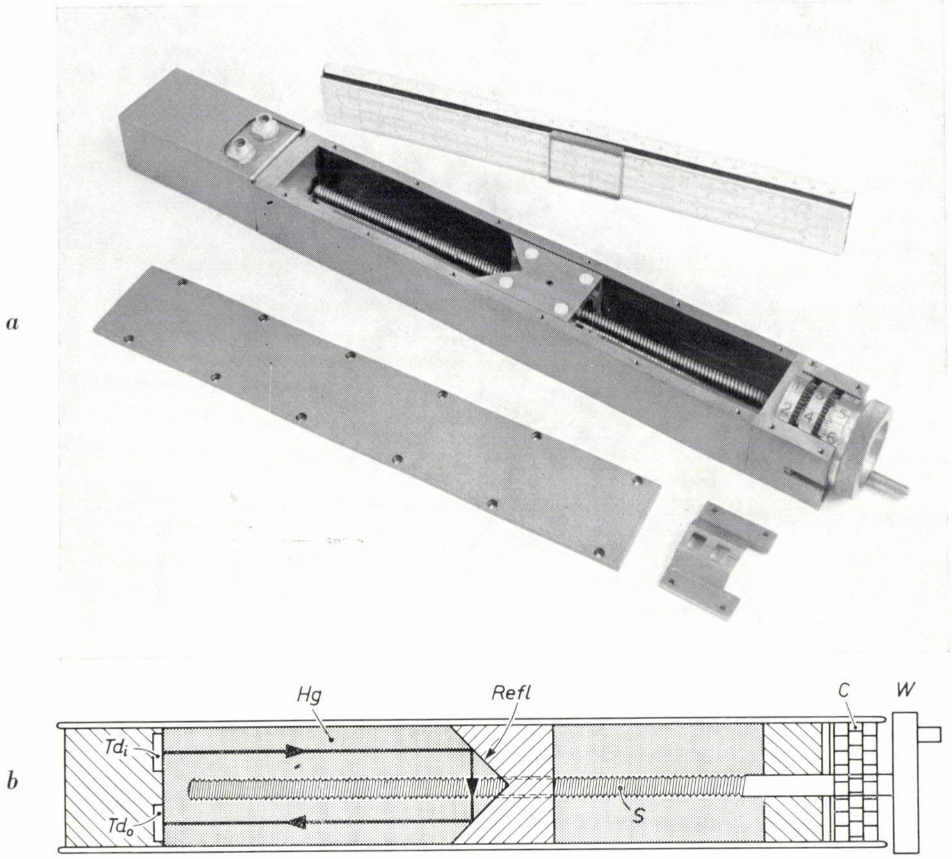

Fig. 4. *a*) Variable mercury delay line, with lid removed. *b*) Path of waves in the line. Td_i input transducer, Td_o output transducer. The delay is varied by changing the position of the corner reflector *Refl*, mounted on a sliding piston driven by a precision lead screw *S*. This screw is cut with the exact pitch to make 1 revolution correspond to 10 µs change of delay. *W* driving wheel. *C* revolution counter. (Photograph from: C. F. Brockelsby, Ultrasonic mercury delay lines, Electronic and Radio Engr. **35**, 446-452, 1958.)

in *fig.* 5. In this system many reflections occur as the signal traverses its "billiard table" path from input to output and a comparatively long path can be obtained in a reasonably small space.

The classical theory of absorption of sound in liquids predicts an attenuation constant which is proportional to the square of the frequency. The molecules of most liquids have rotational and vibrational degrees of freedom which are neglected by classical theory, and which result in attenuation constants higher than those predicted. Mercury however is monatomic and agrees well with the theoretical predictions at frequencies below 50 Mc/s.

It is the quadratic variation of the attenuation constant which limits the frequency at which a given delay can be obtained in a practical system using mercury as the delay medium. As the transducer resonant frequency is raised, the fractional bandwidth of the line at first remains constant. As the frequency is raised further, however, the mercury attenuation at the high frequency extremity of the passband becomes increasingly significant; this both limits the bandwidth and depresses the frequency of maximum response to a value below the crystal frequency. Thus at television frequencies long delays are difficult to obtain if the required bandwidth is to be preserved. The characteristics of some typical mercury delay lines, including those illustrated in figures 4 and 5, are given in *Table I* on page 241.

Solid delay lines: delay medium and design

Solid materials are, in general, capable of supporting two types of vibration, namely compressional waves and shear waves. In a solid ultrasonic delay line shear waves are chosen for two reasons. First, shear waves travel more slowly through a solid medium than compressional waves, and thus a longer delay may be obtained in a given path length. Second, and more important, when a dilatational wave is reflected from the boundary of the delay medium then in general shear waves are also generated. These waves are propagated in a direction different from that taken by the reflected compressional wave, and travel through the medium with a different velocity; they may thus give rise to spurious signals at the output transducer. If shear

Table I. Physical and electrical characteristics of some typical liquid and solid delay lines suitable for use in television applications.

Delay medium	Transducers	Delay µs	Band-centre Mc/s	Bandwidth Mc/s	Insertion loss $V_{\text{in}}/V_{\text{out}}$ dB	Input and output capacitance pF	Largest spurious signal, dB below wanted signal
Mercury	X-cut quartz crystal	25	15	6	65	31	46
,,	,,	30-330 *)	14.3-15.5	6.8-7.6	61-65	31	35
,,	,,	1000 **)	7.5	3	69	44	33
Fused quartz	Y-cut quartz crystal	33.3	59	28	48	80	50
,,	,,	2500	29	7	38	180	40
Lime soda glass	Lead zirconate-titanate type Piezoxide 3	64	4.4	2.5	10-20 ***)	1000-2000 ***)	40

*) Illustrated in fig. 3.
**) Illustrated in fig. 4.
***) The insertion loss of this line depends on source and termination impedances; the capacitances vary widely over the passband.

waves are used initially, however, and are polarised parallel to the reflecting surface (i.e. normal to the plane of incidence of the wave on the reflecting surface), then they are simply reflected at each impact with no such "mode conversion". The geometrical design of the delay line configuration is thereby greatly simplified.

The piezoelectric transducer used to generate the shear vibration normally consists of a Y-cut crystalline quartz wafer; alternatively a polarised ferroelectric material can be used. The transducer is coated on both faces with metal film electrodes as before and bonded on one face to the delay medium by means of a material which should be acoustically matched to both the transducer material and the delay medium. Indium is often used to make the bond because it has good adhesive properties and its acoustic impedance has a suitable value.

Consider now the choice of the medium. Single crystals are difficult to use since their elastic constants are not normally the same in all directions. Polycrystalline materials are unsuitable for wide-passband delay lines since the ultrasonic waves interact with the grain structure of the medium at high frequencies causing scattering. The material currently considered most suitable as a delay medium is vitreous silica (fused quartz), which has an extremely low attenuation. For short delays mixed oxide glass may be used, although the attenuation in this medium is much greater and it cannot be made as homogeneous as fused quartz.

If large pieces are called for, even fused quartz is difficult to make with the required homogeneity, and the cost will be very high. For producing a long delay in a single piece of quartz, the path traversed by the beam is therefore folded, as in the case of the

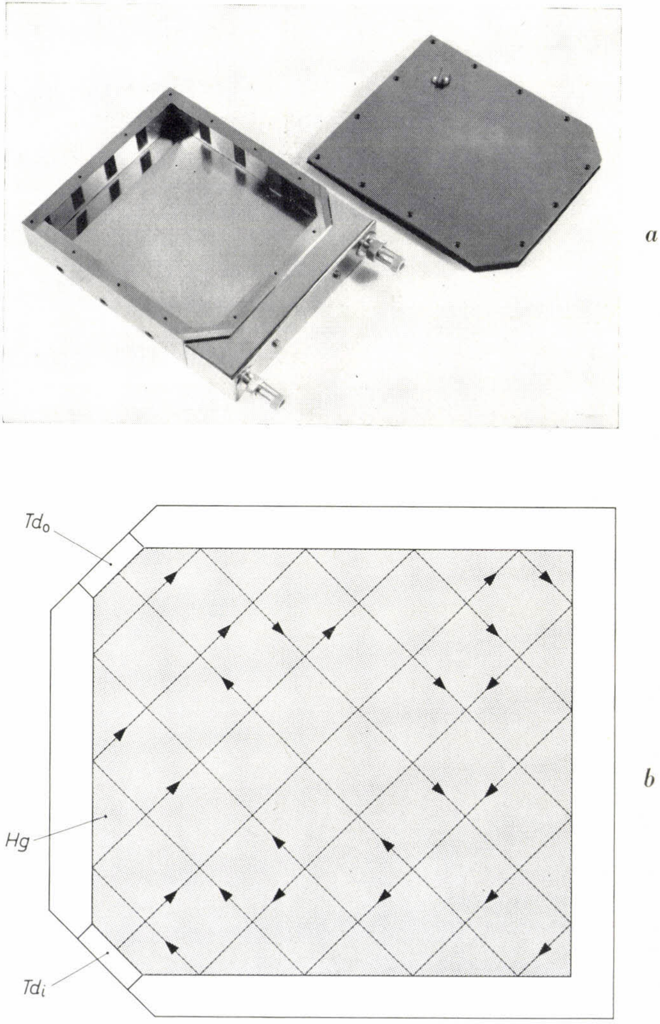

Fig. 5. *a*) "Billiard table" type of mercury delay line, with lid removed. *b*) Path of waves in the line. The signal propagated by the input transducer travels through the mercury by the billiard table path shown, and thus undergoes a long delay in a comparatively small volume of mercury. (Photograph from: C. F. Brockelsby, Ultrasonic mercury delay lines, Electronic and Radio Engr. **35**, 446-452, 1958.)

mercury delay line shown in fig. 5. In *fig. 6* some practical delay line geometries of varying complexity are illustrated. The longest delays are obtained by using the complex fifteen-side line shown in fig. 6*d*. The delay may then be doubled by using the double-decker configuration shown in the photograph of *fig. 7*. In this system the input transducer launches a signal into the lower half of the line; after traversing the path shown in fig. 6 the signal strikes a corner reflector which transfers it to the upper half of the line. The signal then follows an identical path (in reverse) in this portion of the line, and finally arrives at the output transducer where it is reconverted into an electrical signal. This system has the additional advantage that the probability of secondary signals travelling on different paths from the input to the output transducer is reduced to practically zero.

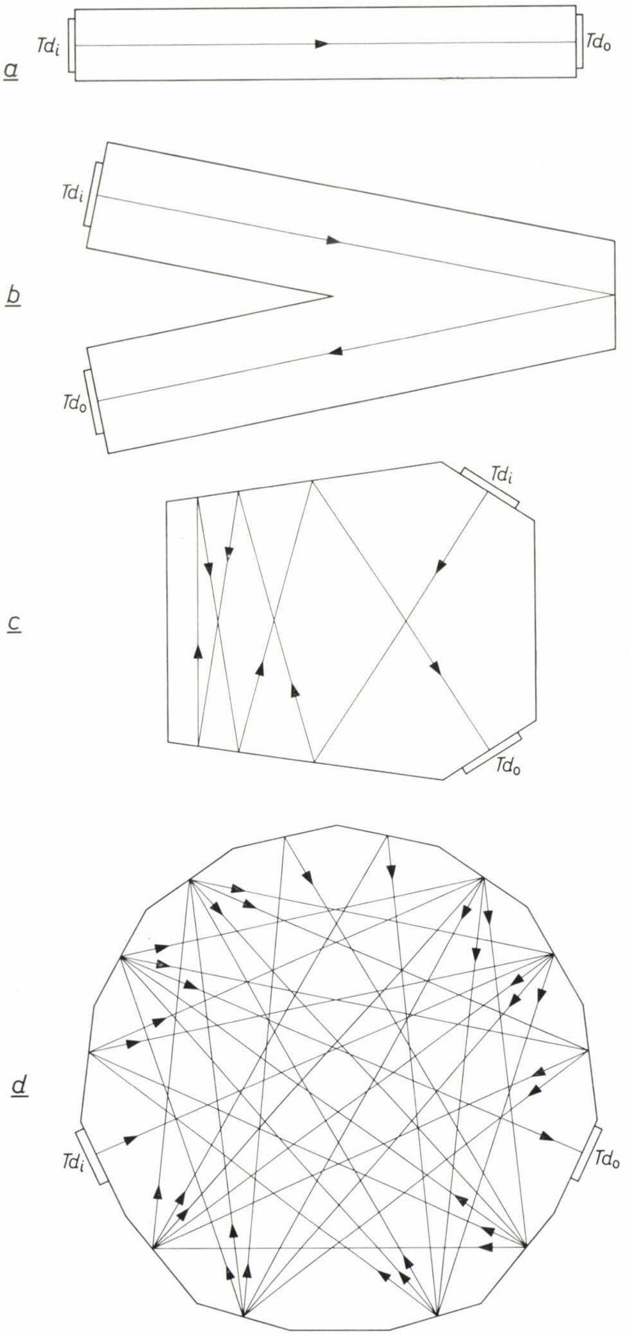

Fig. 6. Different configurations of solid delay lines, e.g. in fused quartz. Large pieces of quartz of suitable homogeneity are expensive and difficult to make. When long delays are required the configuration is made such that the signal must undergo many reflections in its passage through the line.

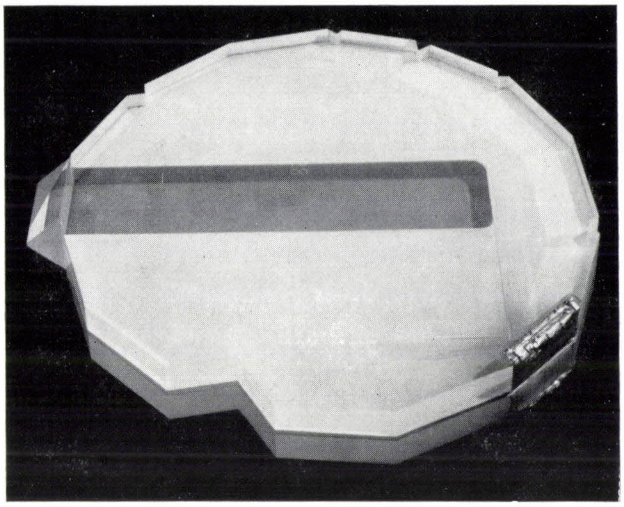

Fig. 7. "Double-decker" quartz delay line. In this configuration two of the complex fifteen-sided delay lines shown in fig. 6*d* are placed on top of each other and are connected by means of a corner reflector, in order to double the delay obtained. Edges of the line which give rise to troublesome reflections are ground away.

Fused quartz has a lower attenuation per unit delay than mercury at a given frequency and thus much longer delays may be achieved in this medium. Delays of several milliseconds may be obtained at a centre frequency of 30 Mc/s with a bandwidth of 8 Mc/s. The characteristics of some typical solid delay lines are also given in Table I.

It is worth mentioning at this point a metal strip delay line which has recently been developed in the United States [4]). A ceramic transducer is bonded to the end of the strip which is made from a metal having a low acoustic attenuation, and is used to propagate shear waves down the interior of the strip. It may be shown that if the thickness of the strip is less than half the wavelength of the highest frequency component of ultrasound present, then the signal travels down the line without dispersion. The width of the strip may be made large compared with the wavelength to provide mechanical rigidity and to enable transducers of convenient size to be bonded to the end. Ultrasonic energy striking the edges of the strip is absorbed by means of adhesive tape. The advantage of this form of delay line is that it may be bent or rolled up without loss of performance, and although its attenuation is greater than that of fused

---

[4]) A. H. Meitzler, IRE Trans. **UE-7**, 35, 1960.

quartz, a delay of 10 milliseconds has been achieved with a video bandwidth of 2 Mc/s.

Input and output circuits

In order to obtain optimum performance from an ultrasonic delay line it is necessary that the electrical source and load impedances should be chosen correctly. This choice is determined by the nature of the transducers used and by their coupling to the delay medium.

It has already been mentioned that a transducer for use with solid or liquid delay lines may be represented very approximately by a capacitance in parallel with a resistance (in reality this is valid only at the centre of the passband). If the transducer is a quartz crystal which has a low value of the coupling coefficient k, this effective parallel resistance is very high compared with the reactance of the transducer capacitance within the passband, and, as previously stated, the acoustic response of the line is not significantly dependent on the electrical terminations. A satisfactory *mechanical* bandwidth (fractional bandwidth $2/\pi$) is then achieved by acoustical matching of transducer and delay medium. The electrical circuit of which the trandsucer forms a part evidently should have at least the same bandwidth. To this end it is necessary to damp the circuit with a shunt resistance (alternatively a suitable four-terminal matching network may be used). A typical quartz transducer for a solid delay line may be represented electrically by a 10 kΩ resistance in parallel with a 200 pF capacitance. The damping resistor required to terminate this system might be as low as 75 Ω. (The capacitance of course must be tuned to the crystal frequency by means of a parallel inductance.) The output of the delay line system may then be regarded as a constant current generator, and the effect of the damping resistor is to produce a voltage insertion loss $V_{\text{in}}/V_{\text{out}}$ which depends largely on the ratio of termination impedance to source (transducer) impedance, and in this case is of the order of 40 dB. To reduce this voltage loss it is important to keep stray capacitance to a minimum and thus maximise the value of the damping resistance necessary to produce the required electrical bandwidth. A similar electrical bandwidth is, of course, necessary for the driving circuit.

In the case of ceramic transducers, which have *high* coupling coefficients, the effect of a parallel damping resistor is by no means so simple. The shunt radiation resistance of the transducer is now comparable with the reactance of the capacitor and both vary appreciably over the passband. The optimum driving and receiving circuits can then be predicted exactly only by laborious calculations; a good account of the effect of electrical and mechanical terminations on the loss and bandwidth of delay systems using ceramic transducers is given by Thurston [5]).

The electrical characteristics of wire delay lines, where coils are used as input and output transducers, are entirely different from those of solid and liquid lines. However, as previously mentioned, wire delay lines are seldom used in television applications; for this reason no further treatment of the relevant electrical circuitry will be given.

II. APPLICATIONS TO TELEVISION

1) *The "Scophony" receiver*

The earliest application of ultrasonic techniques in the field of television was in the pre-war "Scophony" mechanical scanning receiver, in which use was made of the *optical* properties of a liquid delay line when an ultrasonic signal was present in the line.

A television picture is always transmitted as an array of horizontal lines. During one "field" period the video signal corresponding to every alternate line in the picture is transmitted, during the next field period the transmission consists of those lines omitted during the previous scan. The two sets of lines are "interlaced" by the receiver to describe the complete picture or "frame".

In the "Scophony" receiver [6]), the video information corresponding to each line of the picture was modulated onto a 10 Mc/s carrier and applied to the input transducer of a delay line, which used water as the delay medium. Absorbent material was placed at the output end of the line, since no electrical output was required. Under the influence of the carrier alone the periodic variations in the density and hence in the refractive index of the water cause it to behave as a diffraction grating, the spacing of the lines being equal to the wavelength of the ultrasound in the

---

[5]) R. N. Thurston, IRE Trans. UE-7, 16, 1960.

[6]) J. H. Jeffree, Television 9, May 1936, p. 260, and British Patent No. 439 236.

water. If a parallel beam of light is allowed to pass through the medium, then the amount of light diffracted away from the zero order maximum into subsidiary maxima by any part of the grating is proportional to the amplitude of the periodic variations in the refractive index of the medium at that point.

The system used is illustrated in *fig. 8*. Light from an illuminated slit is collimated to pass through the delay line as a parallel beam. The 10 Mc/s carrier, modulated with the picture information, is applied to the delay line, which is of such a length as to accomodate a wave train corresponding to one complete line of the picture. The signal corresponding to each picture element causes an amount of light proportional to the amplitude of this signal to be diffracted away from the zero order maximum for that section of the delay line. The undeviated zero order beam which is thus modulated in intensity across its width, is focussed onto the screen of the receiver by a lens and rotating mirror system as shown. A given progressive picture point on the delay line is arrested by the rotating mirror system to produce a stationary picture point on the screen; this point will be present for the complete line duration, and the same applies to other points of the picture line. A further rotating mirror system, not shown in fig. 8, is used to provide the "frame scan", i.e. to combine the successive lines of the picture to produce the complete display.

The "Scophony" receiver suffered from all the usual problems of mechanical scanning systems; the chief of these was the difficulty in synchronising the extremely high speed motor (30 000 r.p.m.) which drives the rotating mirrors providing the stationary picture. For this reason the "Scophony" receiver was soon superseded by the electronic scanning receivers in use today. However, the principle of using ultrasonic techniques in order to provide optical readout of an electrical signal is still of interest as a means of high speed data processing, for certain special applications. Bandwidths of 40 Mc/s may be achieved, together with the facility of simultaneous display or inspection of bits of information fed in sequentially over a period of many microseconds. An application of such a technique will be described later in the section on systems conversion.

2) *Inertia compensation for a vidicon tube*

Ultrasonic delay lines have been used by Hughes 7) (1961) to correct for effects due to moving objects in the well known vidicon television camera tube. In this tube the light from the object in the field of view of the camera falls on a photoconductive layer of antimony trisulphide producing a pattern of conductivity which at any point corresponds to the brightness of the picture observed. In order to convert this pattern into an electrical signal the photoconductive layer is scanned by a beam of electrons, in two fields with interlaced lines as previously described.

Difficulty arises in the vidicon tube when the image on the photoconductive layer is not erased completely by each scan. Owing to the finite decay time of the layer, the signal obtained on scanning consists of the new information plus a certain percentage of the previous information. This effect, which is only noticeable under conditions of poor illumination, results in the "smearing" of the image of a moving object.

Hughes has used the following method in order to correct for this effect. Part of the signal from each line in a field was delayed by one field period (16.651 ms on the US system) and subtracted from the signal due to the corresponding line on the next field, which is the one *adjacent* to it in the picture. The fraction of the signal used for the correction was 10-40%. Since this signal is merely a correction to the main signal, an appreciable improvement may be obtained even when using a low bandwidth delay line, and the line used was of the torsional magnetostrictive type with a bandwidth of 600 kc/s on a 800 kc/s carrier.

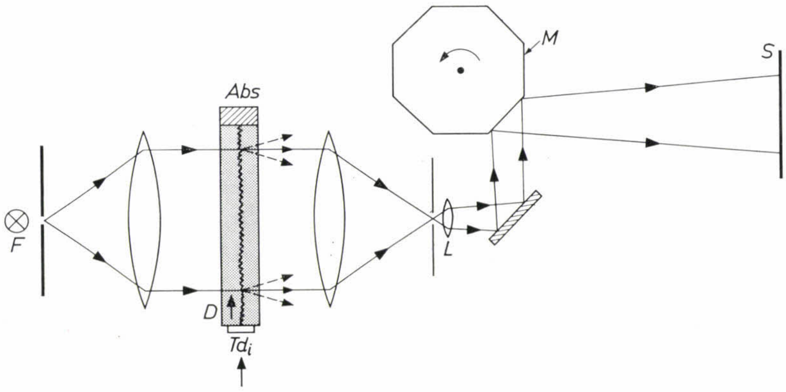

Fig. 8. Display system of the "Scophony" television receiver (1936). A flat light beam from a source F passes through the delay line D and is locally affected in intensity by the wave originating from the video signal. The transmitted beam is focussed by lens L on the screen S. Any progressive picture point in the line is arrested by the rotating mirror M to produce a stationary picture point on the screen.

---

7) W. L. Hughes, IRE Trans. **PGBC-7**, No. 3, p. 8, 1961.

The correction was inadequate in that the signal should ideally have been delayed by *two* field periods and applied to the *corresponding* line on the next frame. This would have been more difficult to achieve owing to the very long delay required. However, although interlace was ignored in this way, and the bandwidth was low, a useful reduction of smear was achieved with this experimental system.

An alternative form of television camera tube, the image orthicon, employs a photoemissive cathode and does not exhibit "smear". For this reason the vidicon is little used in television broadcasting except under conditions of high illumination or in applications where its comparatively small size is of advantage. In addition, in a more recently developed tube of the vidicon type, the "Plumbicon" [8]), lead oxide is used as the photoconductive material; in this case the "smearing" effect is hardly noticeable. Thus it appears that smear correction will seldom be necessary in future television applications.

3) *Vertical aperture correction*

Ultrasonic delay line techniques may also be used to correct for another fault of a television camera tube, viz vertical aperture distortion.

The electron beam in the pick-up tube as well as in the picture tube must scan the discrete lines from which the television picture is formed (say 405 lines per picture). The effective diameter of the scanning spot formed by the beam of electrons in the pick-up tube, however, cannot be made as small as would be required for the ideal line width. Thus the signal generated when scanning one line is diluted with information from the adjacent lines. This effect is known as vertical aperture distortion and will obviously reduce the definition of the picture produced in the receiver. A *horizontal* aperture distortion also exists: whereas the television transmitter is designed to have a bandwidth such that frequencies corresponding to $\frac{5}{4}\times 405$ changes from black to white along one picture line can be coped with, the diameter of the scanning spot overlapping several of these changes will prevent the resolution of all these picture elements in the receiver. This horizontal distortion, which strongly resembles the effect of a finite slit width in scanning sound film or magnetic tape recording, can be approximately corrected by use of electronic circuits. Correction of the *vertical* aperture distortion, however, has to deal with the admixture of information pertaining to picture elements scanned one complete picture line period before or afterwards and is possible only by using delay line techniques.

An extra difficulty arises from the way in which the picture is scanned. Since two fields are interlaced in order to describe one complete picture, or frame, it follows that in order to correct one line of a frame for the admixed information of adjacent lines, it would be necessary to store the information not for one line (96 μs on the 405 line 50 c/s system used in Great Britain) but for one field period (20 ms).

For simplicity it is proposed first to ignore interlace and to correct each line with the information stored in the adjacent lines of the same field. To perform this correction at all adequately, each line must be corrected with the signal due to the subsequent line in the field as well as the preceding one. The system used is illustrated in *fig. 9*. The main signal is delayed by one line period, i.e. 96 μs; from this is subtracted a part of the signal from the *preceding* line of that field, which has undergone a delay of twice the line period, and part of the signal from the *subsequent* line, which is made available in advance by bypassing the main delay line. Dependent on the vertical aperture distortion in the signal, the fraction of the signal from the adjacent lines needed for the correction is 10-20%.

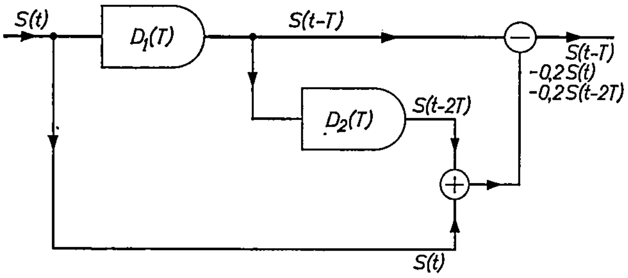

Fig. 9. Vertical aperture correction using two "one-line" delay lines D_1 and D_2. The input signal $S(t)$ delayed by one line period T is used as the main signal, $S(x-T)$. This signal is then combined with 10-20% of the signal from the previous line, $S(t-2T)$, which has been delayed by $2T$, and the same proportion of the signal from the subsequent line, $S(t)$, which has undergone no delay.

Since this correction involves delaying the main signal, the delay line used must be one with a bandwidth sufficient to accomodate the video information. For the 405-line, 50 c/s system in which double sideband modulation is used, the delay line must have a bandwidth of 6 Mc/s. In order to prevent appreciable distortion, the frequency characteristic of the line should be flat to within 1 dB over the whole band. In addition, the delay line must be variable in length if the line system is synchronised to the mains, since the frequency of the mains may drift appreciably. A variable mercury delay line is suitable for this application and it is possible to use

---

[8]) E. F. de Haan, A. van der Drift and P. P. M. Schampers, The "Plumbicon", a new television camera tube, Philips tech. Rev. 25, 133-151, 1963/64 (No. 6/7).

a servo mechanism to adjust the length of the line and to provide automatic control of the vertical aperture correction. If, however, the line system is controlled by a crystal-locked oscillator then no adjustment should be necessary and a solid delay line may be used.

Using the system described, a very marked improvement in picture quality may be obtained. Gibson and Schroeder [9]) (1960) and Howorth [10]) (1962) have described systems of this kind. However, in order to perform this correction in the most effective manner interlace should not be ignored, and each line should be corrected with information from the adjacent lines in the *frame* instead of the field. The system used should then be essentially the same as that shown in fig. 9 with the exception that the delays involved are now equal to one field period (20 ms).

Since this long delay is required for the main signal, which however should not suffer my loss of definition, a rather difficult problem has to be solved. As previously mentioned, the most suitable delay medium for providing long delays at large bandwidth is fused quartz. However, using existing techniques, it is not possible to construct a single delay line of 20 ms delay even using fused quartz, since the path length required is 80 metres. A piece of quartz of the required size and homogeneity cannot at the moment be obtained; in any case the attenuation in this path length would be too great. It is therefore necessary to use a number of shorter delay lines to achieve this delay, with repeating amplifiers to boost the signal after passage through each section. A 20 ms delay which has been made by Mullard consists of eight lines each of 2.5 ms delay. This system has a bandwidth of 8 Mc/s with a centre frequency of 30 Mc/s.

As previously stated, if the line system is synchronised to the mains frequency then the delay used must be variable. In order to achieve this, the cascade of quartz delay lines is made with a delay slightly less than 20 ms. The remainder of the delay is provided by means of a short mercury delay line which may be fitted with a servomechanism to keep the delay matched to the mains frequency, as described above. This servomechanism might also be used to compensate for variations in temperature, although it is also possible to stabilise the temperature at a constant value by use of a thermostat. This should preferably be set to a value between 50 °C and 70 °C, since the attenuation in fused quartz is lower in this temperature region than at room temperature.

It would, incidentally, be possible to feed the mechanical signal from the final section of the quartz delay line directly into the mercury line without the use of an intermediate repeater amplifier and the two associated transducers. This might be done as shown in *fig. 10*. The shear wave in the quartz undergoes a reflection at a plane such that the plane of incidence is not normal but parallel to the polarisation of the shear wave, and at such an angle of incidence that the wave is converted entirely into a compression wave. The resultant signal may now be used to propagate a compressional wave in the mercury which is held in a steel container bonded to the end of the quartz.

Since the delay line required for this ideal form of vertical aperture correction is so complex, it would be convenient if a single delay line could be used to provide both the 20 millisecond delays needed. In fact, this may be done by using two separate carrier frequencies in the 8 Mc/s pass-band of the delay line. A possible system is illustrated in *fig. 11*. If the centre frequency of the delay line is 30 Mc/s, the main video signal is passed through the delay line as a single-sideband modulation (width 4 Mc/s) on a 26 Mc/s carrier. This is then combined with a fraction of the signal from the subsequent line in the next field which has undergone zero delay, and with that from the previous line of the preceding field which, having traversed the delay line once on a 26 Mc/s carrier is then passed through the delay line once more on a 34 Mc/s carrier. Filters are used to prevent mixing of the two signals.

Owing to attenuation in the delay lines, and noise in the amplifiers used, the improved definition

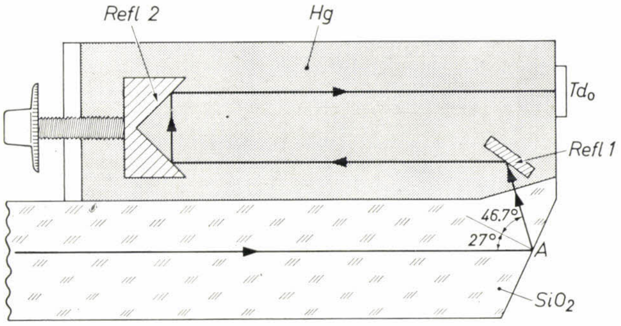

Fig. 10. Combination of a fused-quartz delay line with a variable mercury delay line. At the point *A* the plane and angle of incidence of the vertically polarised shear wave in the fused quartz delay line (S_{iO_2}) are such that the signal is converted entirely into a compression wave. This wave then passes directly into the mercury delay line, with reflector *Refl 1* and adjustable corner reflector *Refl 2*, by means of which the delay of the composite line may be adjusted.

---

[9]) W. G. Gibson and A. C. Schroeder, J. Soc. Motion Picture and Television Engineers **69**, 395, 1960.

[10]) D. Howorth, B.B.C. Research Department Report **T-085**, 1962.

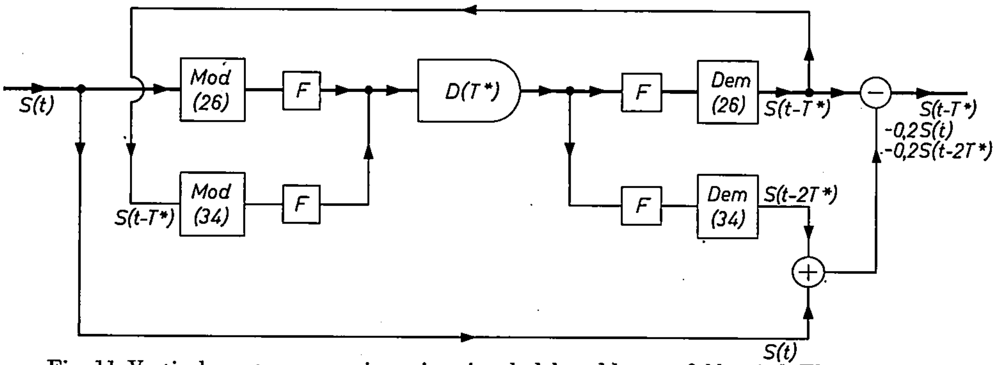

Fig. 11. Vertical aperture correction using signals delayed by one *field* period. This system is similar to that shown in fig.9, except that a single delay line *D* is used to provide *both* the one-field-period delays required. This is done by passing the signal with a bandwidth of 4Mc/s once through the line as single-side-band modulation on a 26Mc/s carrier, by means of a modulator *Mod* (*26*) and a demodulator *Dem* (*26*), with suitable filters *F*, and then again on a 34 Mc/s carrier; the centre frequency of the 8 Mc/s passband of the delay line is 30 Mc/s.

resulting from both these methods of vertical aperture correction is paid for by some small deterioration in the signal-to-noise ratio. However, since the signal-to-noise ratio of the delay system is normally of the order of 50 dB, the overall result is a considerable improvement in picture quality.

4) *The "Secam" and the "PAL" colour systems*

In the previous applications described in this article an ultrasonic delay line was employed to reduce the effect of one line of a television picture on the adjacent lines, and thus to improve definition. In the "Secam" system [11]) of colour television, which was proposed a few years ago, a similar process is used for a purpose opposite to that of the previous case: a delay line is used to store one line of the picture so that it may *add* information to the subsequent line.

Every colour television system should preferably be "compatible" i.e. it must be possible to receive the total signal as a black-and-white picture on a normal black-and-white receiver. Three signals are transmitted; one is a luminance signal which defines the brightness or luminance of each element of the picture just as in a black-and-white system. The other two signals contain the colour information and define the hue and saturation of the colour at each point of the picture. These are transmitted as the red and blue colour difference signals, one describing the amount by which the red signal differs from the luminance signal and the other similarly describing the blue. The green signal is that remaining when the red and blue signals have been subtracted from the luminance signal. In the "Secam" system these colour signals are not transmitted simultaneously, as in the N.T.S.C. system, but on alternate lines of each field. The receiver displays each line of the picture by using directly the information being received at that moment (say the blue) whereas for the other colour difference (red) it employs the information which was transmitted on the previous line of that field. This sharing of half the colour information between adjacent lines of each field entails some loss of precision in the colour detail since the mixing process has introduced errors similar to those which the vertical aperture correction previously described sought to remove. However, these errors to a first approximation are in the colour of the picture rather than in its luminance, and the eye is less sensitive to loss of colour definition.

In order to effect this combination of colour information from adjacent lines of a field, a "Secam" receiver requires a device which is capable of storing the colour signal for one line period (64 μs on the 625 line 50 c/s system which will be used for colour television in Europe). Since the transmitter is to be crystal controlled rather than locked to the mains frequency, this delay need not be variable and thus it is not necessary to use a mercury delay line. In addition, the delay is comparatively short, the centre frequency is low (4.43 Mc/s), the required bandwidth is only 2 Mc/s and some attenuation can be tolerated at the edges of the passband. Thus a suitable delay line can be made using *glass* as the delay medium. Glass has the disadvantage that the velocity of shear waves in the delay medium varies slightly from sample to sample, and that each line must be individually checked and adjusted to give the required delay, which must be correct to within 0.05 μs. Such adjustment involves grinding away one of the reflecting edges of the line, and this is normally difficult since errors may be introduced in the direction of the reflected beam. However, by use of the delay path geometry shown in *fig. 12* this

---

[11]) P. Cassagne and M. Sauvanet, Ann. Radioélectricité **16**, 109, 1961.

adjustment is simplified. If the longest edge of the delay line body, on which two reflections occur, is ground away, then any variation in the direction of the wave in the plane of the paper, introduced at the first reflection by errors in the angle of grinding, is compensated at the second reflection. Such compensation is important if the received signal is to fall within the central lobe of the polar diagram of the output transducer.

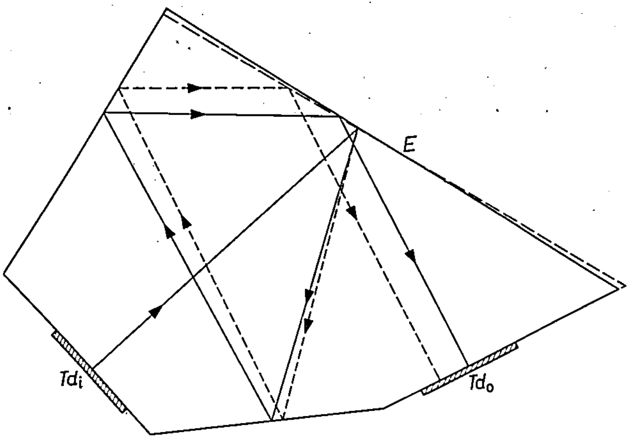

Fig. 12. Path geometry in a glass delay line for use in "Secam" and "PAL" colour television systems. This diagram shows how deviation of the ray, caused by an error in the angle at which the first reflecting surface E is ground away, is compensated by the second reflection at this surface. The error in grinding has been considerably exaggerated for convenience of drawing. (J. S. Palfreeman and R. W. Gibson, British patent applied for.)

It is necessary that the delay obtained should not vary significantly over the temperature range in which the receiver normally operates. In some recent experimental delay lines made from Philips type 18 glass, the temperature coefficient of the delay is about 0.001 μs/°C, so the temperature can rise or fall by about 50 °C before the picture is degraded.

It is important in this application that the amplitude of signals arriving at the output transducer of the delay line at the wrong time should be kept to a minimum, since these would produce areas of colour in the wrong place. In the design shown in fig. 12 these spurious signals are kept at a level of —35 to —40 dB, which could be extended to —50 dB if necessary.

The insertion loss of these delay lines is between 20 and 25 dB if symmetrical terminations are used (i.e. if the internal resistance of the signal source is equal to the load resistance) and if the resistance value is optimized for maximum flat bandpass characteristics. The insertion loss may be up to 12 dB better for asymmetrical terminations. This loss has to be made up by an amplifier coupled to the delay line. The component values and circuit parameters are not critical.

In the N.T.S.C. system the colour difference signals are transmitted simultaneously but separated in phase. In another system for colour television, the "PAL" system [12]), the phase of one of these signals is *inverted* on alternate lines. It has recently been proposed for the receiving equipment which decodes and separates the two signals to store the colour information in a particular picture line for one line period and to add or subtract it to that received for the next line. However, since it is important that the two signals are mixed in the correct phase, the delay line used must be accurate to within a fraction of the subcarrier period, i.e. a few nanoseconds. In addition, the delay must maintain this value over the frequency band of the colour signal and over the temperature range of the receiver.

5) *Study of multipath effects*

The picture displayed by a television receiver frequently suffers from what are known as multipath effects. These effects are due to the arrival at the receiving antenna of two (or more) signals, one direct from the transmitter and the other by a different path, perhaps by reflection from a passing aircraft. If the reflected signal is received at appreciable strength in comparison to the direct signal a "ghost" picture is observed as shown in *fig. 13*. As the aircraft moves, the path difference, and hence the time delay between the two signals, varies. Thus, the phase and position of the reflected signal is constantly changing and this may give rise to a beat effect or "flutter" on the screen of the receiver.

When a new receiver is being designed, or when a new system (e.g. colour television) is being developed in the laboratory it is important to study the effects of reflected signals on the received picture. Since it is inconvenient to use real aircraft to produce the reflected signal, and in any case the exact reflection is not readily repeatable, the reflected signal must be produced by artificial means.

A variable mercury delay line can be used for this purpose [13]). In the system illustrated in *fig. 14*, the test signal, from either a live television transmitter or from a local test pattern generator, was modulated onto a carrier of a suitable frequency, viz 15 Mc/s, and applied to two transmission paths. One of these consisted of a short fixed delay of 30 μs and the other included a variable delay line, the delay of which could be varied continuously from 25 μs to 300 μs. In series with the variable delay was an attenuator.

---

[12]) W. Bruch, Farbfernsehsysteme — Überblick über das NTSC-, SECAM- und PAL-System, Telefunken-Z. **36**, 70-88, 1963 (No. 1/2).

[13]) C. F. Brockelsby, Electronic Design, Oct. 1957, p. 36.

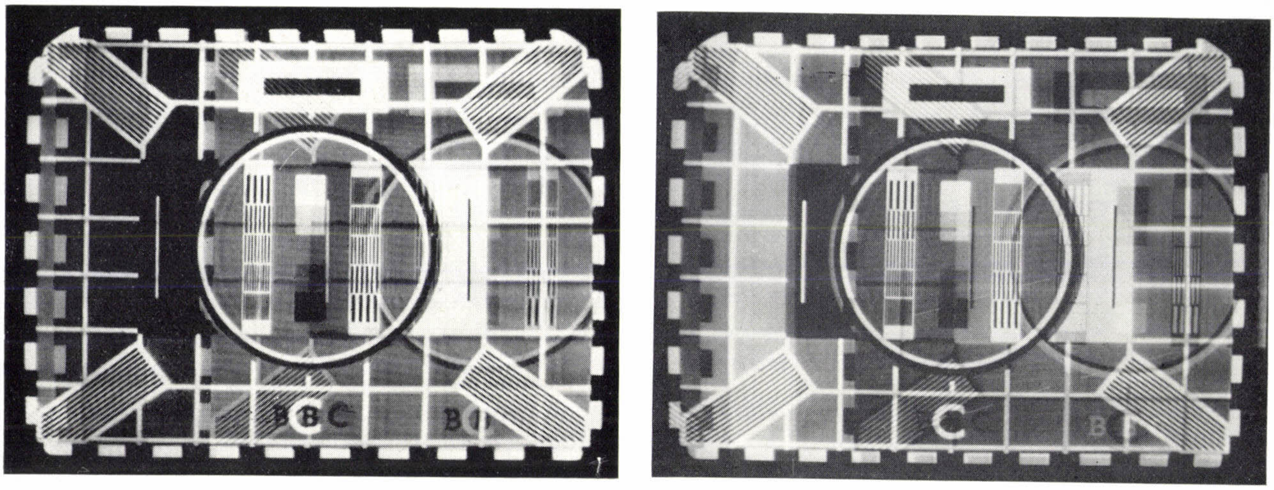

a *b*

Fig. 13. Ghost images produced by signal reflections, e.g. at a passing aircraft.
a) Reflected signal in phase with main signal.
b) Reflected signal out of phase with main signal.

After passing through the delay lines the signals from the two paths were combined and their frequency changed back to the original carrier frequency, which was applied to the receiver under test. By altering the variable delay the effective path difference between the two signals could be changed, and by adjusting the attenuator the strength of the reflected signal could be controlled.

The variable delay line used was a mercury delay line similar to the line illustrated in fig. 3. In order to simulate the effect of a moving aircraft the lead screw driving the sliding piston was driven from a Velodyne motor. The input to the Velodyne amplifier was a voltage to which the motor speed was proportional. The delay could then conveniently be programmed by supplying the Velodyne control voltage from a potentiometer.

At a carrier frequency of 15 Mc/s the delay line system had a bandwidth of 8 Mc/s for a 300 µs delay. Working at a received signal level of 3 mV a signal-to-noise ratio of 50 dB was achieved. The insertion loss of the line was around 50 dB, so the input transducer required a drive of about one volt which could readily be provided with adequate linearity by a small receiving tube.

Gander and Mothersole [14]) (1958) have given a detailed description of such a system. They found this application of delay line techniques particularly useful when appraising a new television system such as the N.T.S.C. colour system.

6) *Systems conversion*

It is frequently required to convert a television video signal from one scanning system to another, e.g. from 625 to 405 lines per picture. Such conversion is a regular requirement when programmes are relayed between countries using differing line systems. The conventional technique is to display the input signal on a cathode ray tube of relatively long persistence, and to examine this with a television camera tube working on the line system

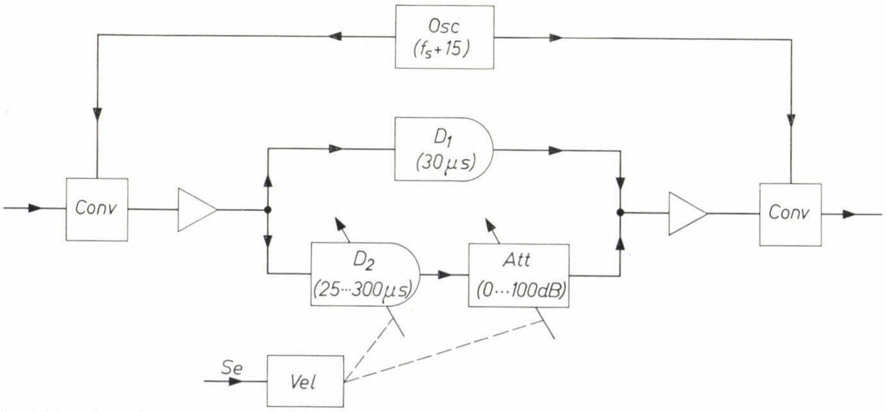

Fig. 14. Aircraft reflection simulator using a variable liquid delay line. The signal passing through the fixed 30 µs delay line D_1 represents that arriving at the receiving antenna directly from the transmitter. The signal passing through the variable delay line D_2 and attenuator *Att* represents that reflected from a passing aircraft; the amplitude and phase of this signal may be varied. Both the delay line and the attenuator are driven by a Velodyne motor *Vel*, whose control voltage can conveniently be programmed (servo system *Se*).

---

[14]) M. C. Gander and P. L. Mothersole, Electronic Engng. **30**, 408, 1958.

required [15]). This process may introduce noise in the conversion of video signals into a display and vice versa, and may produce loss of definition and smearing of moving images due to the persistance of the phosphor. Moreover, moiré-effects are virtually unavoidable with this technique. Other possibilities for a systems conversion are therefore of interest.

In most countries the field period of the television system is equal to the period of the mains. It therefore follows that in general systems conversion involves a change in the field period as well as in the number of lines. However, in many cases it appears that the field periods of the input and output signals may be equal and that conversion may involve only a change in the number of lines per field. For example, in Great Britain it is proposed to use a 625-line camera, but to transmit the picture simultaneously on both 625 lines and 405 lines using the same field period. Conversion without change of the field period is known as synchronous conversion and Lord and Rout [16]) (1962) have recently described a standards converter which uses ultrasonic delay line techniques in order to effect such a conversion.

In order to effect the change from one line system to another, two processes must be performed. First, by selective rejection or repetition of information the number of lines in the field must be changed to suit the new standard. Secondly, the information in each line must be redistributed to the time scale of the new line system. This would involve, for instance, stretching a 64 μs "625" line into a 96 μs "405" line.

As a simple example the reduction of the number of lines by a factor $\frac{3}{4}$ may be considered as shown in *fig.15*. This conversion is done simply by discarding every fourth line of the field. However, when the lines are now displayed on the new system they will be distributed as shown by the dotted lines. An originally straight inclined row of picture elements A, B, C, D, E, F, G, H will thus appear as a discontinuous line a, b, c, e, f, g.

Moreover the process of discarding the fourth line, which contains picture element D, must not result in the loss of the information contained in this line. This is avoided by correcting each of the remaining lines with information from the adjacent lines, suitably weighted in magnitude as shown in *fig.16*. Output line 1 is reproduced as before; output line 2 however is displayed between input lines 2 and 3 and thus contains information from line 2 (e.g. B displayed at point b_1) and information from line 3 (point c_1). Output line 3 similarly contains both information from input line 3 (c_2) and from input line 4 (d_1). In this way interpolation is achieved which results in a reduction of the original distortion of the inclined row of points at the expense of some loss of horizontal definition.

In the process described by Lord and Rout it is proposed that a one-line delay should be used to permit the required interpolation to be performed. This system is illustrated in *fig. 17*. The input signal is split into two parts. One part is fed into a one-line delay; the other is multiplied by an "interpolation function" F and is fed into one input of an adder.

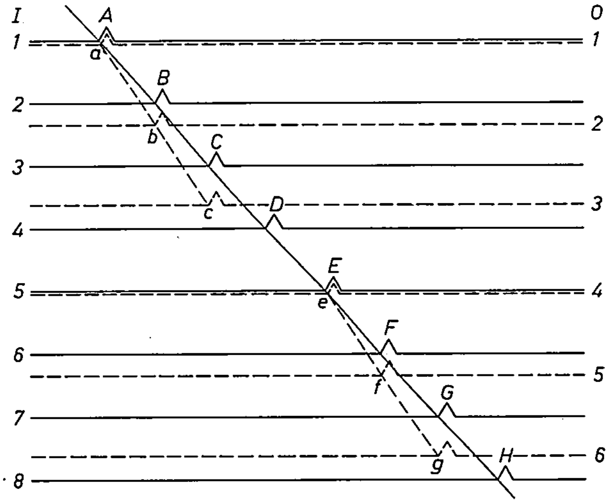

Fig. 15. Standards conversion by simply discarding (or adding) picture lines. In this diagram the number of picture lines is reduced by a factor $\frac{3}{4}$ by discarding every fourth line. I numbering of input lines, O numbering of output lines. An originally straight diagonal row of picture points $ABCDEFGH$ is thus transformed into the zigzag row $abcefg$.

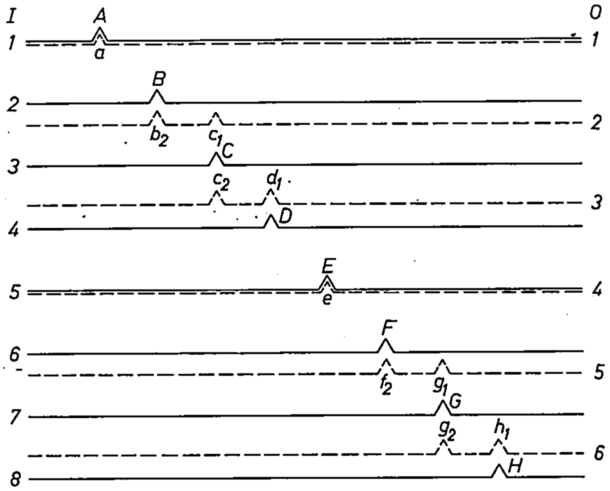

Fig.16. Standards conversion with interpolation. This process differs from that shown in fig. 15 in that each of the remaining picture lines on the new system is corrected with information from the adjacent lines suitably weighted in magnitude. Thus no picture information is lost and the resultant distortion is reduced.

---

[15] J. Haantjes and Th. G. Schut, A line converter for the international exchange of television programmes, Philips tech. Rev. **15**, 297-306, 1953/54.

[16] A. V. Lord and E. R. Rout, I.E.E./I.R.E. Int. Telev. Conf., London, June 1962.

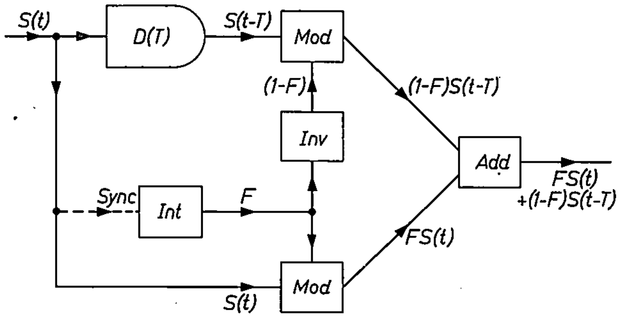

Fig. 17. The interpolation described in fig.16 may be performed using a delay line as shown. The delay is equal to one input line period T. The value of the interpolation function F produced in the generator *Int* (which is synchronised with the line frequency of the input video signal) at any time determines the proportion of information from each input line present in the resultant output line. *Mod* modulators, *Inv* inverter, *Add* adder.

In this unit the signal is combined with that corresponding to the previous line of the field which, after passing through the delay line, is multiplied with the complement of the interpolation function $(1-F)$. The output of the adder is the interpolated signal on the new line system which must now be converted to the new line period.

The value of the periodic interpolation function F at any instant determines the proportions in which the information from each of the two adjacent input field lines is combined to produce the resultant line. For example, when F is 0.3 then 30% of the resultant signal consists of information from the input line $S(t)$ and 70% of information from the previous line $S(t-T)$. In the simple example under consideration F must have a period equal to four input lines since every fourth line is discarded. In practice the interpolation function will be of sawtooth form.

The one-line delay proposed may conveniently consist of a variable mercury delay line of the type previously described if it is required to adjust the delay to compensate for variation of the mains frequency, or a fused-quartz line if the system is synchronised to a crystal controlled frequency.

It is possible, though by no means certain in the case of moving images, that a more satisfactory result would be obtained if the interpolation were performed using, not adjacent lines in the field, but adjacent lines in the picture. For this case a one field period delay would be required and the 20 ms quartz delay line system previously described could be used in this application.

The remaining process in the conversion is the expansion of each of the selected lines to the line period of the new system. This may be achieved by feeding the information contained in the picture line into a storage system, such as an analogue computer store, and reading it out again at a rate determined by the output line period. The computer store might employ magnetic tape as the storage medium. Alternatively, this store might consist simply of a series of capacitors, one for each element of the picture line[17]. For reading-in and reading-out, two electronic rotary switches are provided, each with a number of contacts equal to the number of picture elements (and capacitors). During one input line period the input switch arm rotates steadily to charge each capacitor with a charge proportional to the signal amplitude of the appropriate picture element. The output switch arm "samples" the charge on all the capacitors in a total time equal to the output line period.

This line stretching may, however, also be performed by a combination of ultrasonic delay line techniques and optical picture handling such as the "Scophony" receiving system previously described. In that system a rotating mirror was provided in order to prevent a continuous progression of picture points across the screen. By adjusting the speed of rotation these points may be made to pass a photosensitive device, e.g. a photomultiplier, at any desired rate, and thus the input signal may be reconverted into an electrical signal, the duration of the output signal corresponding to one input line being adjustable to any required value.

In practice, the system used would be somewhat different from the "Scophony" receiver: a more linear conversion of electrical signal into optical modulation may be obtained if use is made of the photoelastic properties of fused quartz to effect the required conversion [18]). A fused quartz bar, under the influence of a stress, will produce rotation of the plane of polarisation of polarised light passing transversely through it; this property is frequently used as a method of stress analysis. If such a bar is placed between two crossed polarisers then, in the absence of stress, no light will pass through the system. If stress is present in the bar, however, then light which has passed through the bar will have a component polarised in the plane of the analyser, and this will be received by the photomultiplier. Thus a video signal applied to a transducer bonded to the bar will result in a video frequency modulation across a beam of light transmitted.

The system just described would however have a square law response, because a stress of either sign would allow light to pass through. To give the required linear characteristic, optical bias to a state

---

[17]) P. Rainger, I.E.E./I.R.E. Int. Telev. Conf., London, June 1962.

[18]) C. F. Brockelsby, J. S. Palfreeman and R. W. Gibson, British patent applied for.

mid-way between extinction and full transmission is provided by including an optical quarter-wave plate. A certain amount of light is then transmitted when there is no stress in the bar, and it is this amount which is modulated when a video signal on a carrier is applied to the transducer.

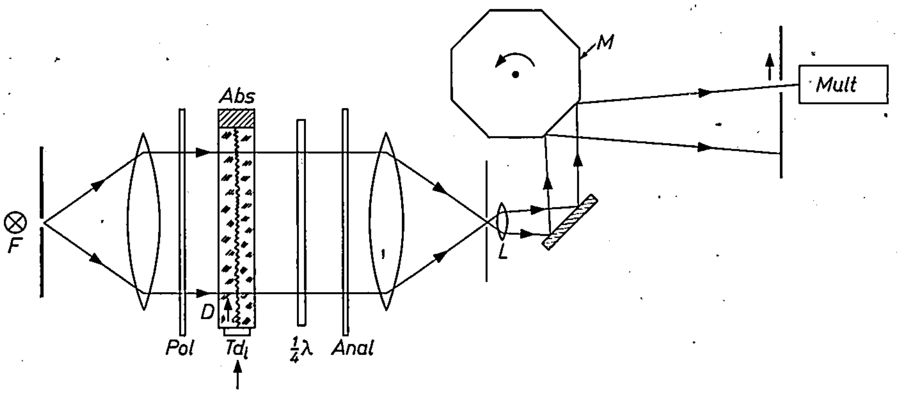

Fig. 18. Line stretching in systems conversion. The system illustrated is similar to the "Scophony" receiver shown in fig. 8. A solid photoelastic delay line is used in conjunction with a polariser (*Pol*), analyser (*Anal*) and $\frac{1}{4}\lambda$-plate, and the speed of rotation of the mirror *M* is adjusted so that the picture points corresponding to each input line move across the slit of the photomultiplier (*Mult*) in a time equal to the desired output line period.

A complete line stretching system using a photoelastic delay line is shown in *fig. 18*. The input signal applied to the delay line causes an amount of light to be transmitted through the system whose local intensity depends on the signal amplitude present in the delay line at any point. As in the "Scophony" receiver, the delay line is imaged on a screen by a lens system; at one point on this screen a slit allows the incident light to fall on a photomultiplier. The speed of the rotating mirror is adjusted so that the picture elements of a complete picture line will pass across the photomultiplier slit in a time equal to the output line period. In this way the required time expansion of the picture line may be achieved. In view of the very high rate on information handling required, such a system may prove more attractive than one using a computer store.

It would be possible to dispense with the rotating mirror and to use instead a moving light source. This source might conveniently consists of a spot of light on the screen of a cathode ray tube, although in practice a vertical line of light would be used to reduce phosphor noise and screen burn. By electronically sweeping the spot (or the vertical line) across the screen in a horizontal direction at an appropriate speed, the picture points may be made to pass the photocell at the required rate.

Alternatively the moving light source might be produced by using a second photoelastic delay line, in which a single pulse is travelling, to "gate" part of a parallel beam of light. By using an optical systen of appropriate magnification, an image of this moving source may be made to scan the original delay line at the correct rate and thus produce the required change of time scale.

Since rotating mirrors are difficult to synchronise at high speed, both these electronically controlled scanning systems offer considerable practical advantages.

The rather sophisticated combination, in this last instance, of several delay lines for interpolation and for a mechanical change-of-rate via optical scanning seems to us a fitting conclusion of this review of delay-line applications in television.

Summary. In ultrasonic delay lines use is made of the low velocity of mechanical waves in solids and liquids to effect a delay of wide-bandwidth electrical signals for times ranging from a few microseconds to several milliseconds. An ultrasonic delay line consists of three components: an input transducer which converts the electrical signal into an identical mechanical wave; the delay medium; and an output transducer which converts the mechanical wave back into an identical electrical signal (whose frequency is usually much higher than 20 kc/s — hence the name "ultrasonic"). Ultrasonic delay lines fall into three categories, using wire, a liquid and an extended solid respectively as the delay medium. In general only solid and liquid lines are used in television applications. When a delay of one picture line period is required a mercury delay line can be used; when a delay of one field period is needed a fused-quartz delay line is better. Wafers of crystalline quartz or of a ferroelectric ceramic are used as transducers for solid and liquid delay lines. It is important that the transducers should be of sufficient size to transmit and receive mechanical signals mainly over narrow ranges of angle. Low-*k* transducers should be matched in mechanical impedance to the delay medium. For high-*k* transducers electrical adaptation to the input and output networks is more difficult to calculate. A table of the characteristics of some typical delay lines is given in the text.

Applications of ultrasonic delay lines in the field of television are described. The earliest application was in the "Scophony" receiver where the variations in density of water accompanying a mechanical wave were used to modulate the intensity of a light beam across its width and to provide the display. A delay of one field period has been used to correct for the effects of smear in the vidicon television camera tube. A delay of one line or one field period may be used to provide correction of "vertical aperture distortion" in television camera tubes. A delay line of one line period delay is incorporated in a receiver for the "Secam" and "PAL" systems of colour television. A variable mercury delay line has been used to simulate the effects of reflections from aircraft on television reception. Finally, it has recently been proposed to use one or more delay lines in a system providing synchronous conversion between two television line systems, e.g. from 625 to 405 lines per picture.